START

US OFFICIAL GAZETTE UNITED STATES PATENT OFFICE

VOL. NO 965

DECEMBER

1977

OFFICIAL GAZETTE of the UNITED STATES PATENT and TRADEMARK OFFICE

December 6, 1977 | Volume 965 | Number 1

CONTENTS

The following are mailed under direction of the Superintendent of Documents, Government Printing Office, Washington, D.C., 20402, to whom all subscriptions should be made payable and all communications addressed:

THE OFFICIAL GAZETTE (PATENTS SECTION), issued weekly, subscription $342.20 per annum for first class mailing, also available as fourth-class mail at $250.00; foreign mailing $85.55 additional; single copies $6.60 each.

THE OFFICIAL GAZETTE (TRADEMARK SECTION), issued weekly, subscription $88.40 per annum, foreign mailing $22.10 additional; single copies $1.70 each.

CIRCULARS OF GENERAL INFORMATION concerning PATENTS, price 60 cents each.

CIRCULARS OF GENERAL INFORMATION concerning TRADEMARKS, price 50 cents each.

PRINTED COPIES OF PATENTS are furnished by the Patent and Trademark Office at 50 cents each; PLANT PATENTS in color, $1.00 each; copies of TRADEMARKS AND DESIGN PATENTS at 20 cents each. Address orders to the Commissioner of Patents and Trademarks. Washington, D.C., 20231.

Printing authorized by Section 11(a)3 of Title 35, U.S. Code P.T.O.

PATENT AND TRADEMARK OFFICE NOTICES

Board of Appeals Decisions Rendered in the Month of October 1977

Affirmed	189
Affirmed in part	24
Reversed	60
Total	273

REISSUE APPLICATIONS FILED

Notice under 37 CFR 1.11(b). The reissue applications listed below are open to inspection by the general public in the indicated Examining Groups and copies may be obtained by paying the fee therefor (37 CFR 1.21(b)).

3,369,715, Re. S.N. 842,931, Filed Oct. 19, 1977, Cl. 222/333, SUBMERGED PUMPING SYSTEM, James C. Carter, Owner of Record: *International Telephone and Telegraph Corporation, New York, N.Y.,* Attorney or Agent: Paul W. Hemminger, et al., Ex. Gp.: 311

3,491,590, Re. S.N. 841,583, Filed Oct. 12, 1977, Cl. 73/141, POWER STOPPER WEIGHT TRANSFER APPARATUS, Billy K. Watkins, Owner of Record: *Inventor,* Attorney or Agent: Benjamin H. Sherman, et al., Ex. Gp.: 244

3,700,721, Re. S.N. 833,128, Filed Sept. 14, 1977, Cl. 260/470, SULFOPHENOXY MALONATE COMPOUNDS, John A. Rice, et al., Owner of Record: *Avtex Fobers Inc., Saint Media, Pa.,* Attorney or Agent: Arthur R. Eglington, et al., Ex. Gp.: 126

3,765,476, Re. S.N. 834,838, Filed Sept. 19, 1977, Cl. 165/16, TWO-RISER HEATING AND COOLING UNIT, James J. Whalen, Owner of Record: *Whalen Company, Laurel, Md.,* Attorney or Agent: Joseph M. Lane, et al., Ex. Gp.: 342

3,834,096, Re. S.N. 843,050, Filed Oct. 17, 1977, Cl. 52/172, INSULATING WALL UNIT, Otto Alfred Becker, Owner of Record: *Inventor,* Attorney or Agent: Thomas E. Beall, Jr., et al., Ex. Gp.: 354

3,847,569, Re. S.N. 834,703, Filed Sept. 19, 1977, Cl. 51/309, CABLE-TYPE SAW, Henry A. Snow, Owner of Record: *Inventor,* Attorney or Agent: Norman S. Blodgett, Ex. Gp.: 147

3,900,754, Re. S.N. 826,237, Filed Aug. 19, 1977, Cl. 313/221, ELECTRIC DISCHARGE LAMP, David Robert Mason, et al., Owner of Record: *Thorn Lighting Limited, London, England,* Attorney or Agent: Robert F. O'Connell, et al., Ex. Gp.: 252

3,906,877, Re. S.N. 835,233, Filed Sept. 21, 1977, Cl. 112/141, REINFORCED HEM FORMING DEVICE, John L. Rockerath, et al., Owner of Record: *Cluett, Peabody & Co., Inc., New York, N.Y.,* Attorney or Agent: John M. Prutzman, et al., Ex. Gp.: 353

3,908,770, Re. S.N. 836,328, Filed Sept. 26, 1977, Cl. 175/65, METHODS AND APPARATUS FOR DRIVING A MEANS IN A DRILL STRING WHILE DRILLING, Albert P. Richter, Jr., et al., Owner of Record: *Texaco, Inc., New York, N.Y.,* Attorney or Agent: Thomas H. Whaley, et al., Ex. Gp.: 354

3,909,286, Re. S.N. 838,354, Filed Sept. 30, 1977, Cl. 106/306, MODIFIED PRECIPITATED ALUMINO SILICATE PIGMENTS, Robert C. Fitton, Owner of Record: *J. M. Huber Corporation, Locust, N.J.,* Attorney or Agent: Harold H. Flanders, Ex. Gp.: 115

3,914,356, Re. S.N. 843,088, Filed Oct. 17, 1977, Cl. 264/40.5, METHODS OF AND APPARATUS FOR CONTROLLING THE THICKNESS OF AN ANNULAR EXTRUSION, Matthew R. Dembiak, et al., Owner of Record: *Western Electric Company, Inc., New York, N.Y.,* Attorney or Agent: S. I. Rosen, et al., Ex. Gp.: 147

3,917,471, Re. S.N. 843,130, Filed Oct. 17, 1977, Cl. 55/267, INSULATING FLEXIBLE COMPOSITE ELEMENT AND PURGE SYSTEM, Otto Alfred Becker, Owner of Record: *Inventor,* Attorney or Agent: Thomas E. Beall, Jr., et al., Ex. Gp.: 177

3,919,146, Re. S.N. 839,140, Filed Oct. 3, 1977, Cl. 260/23 EP, CAULKING COMPOSITION COMPRISING POLYMER HAVING ADDITION POLYMERIZED BACKBONE HAVING CARBOXYL GROUPS ESTERIFIED WITH DRYING OIL FATTY ACID GLYCIDYL ESTER, William D. Emmons, Owner of Record: *Rohm and Haas Company, Philadelphia, Pa.,* Attorney or Agent: George W. F. Simmons, et al., Ex. Gp.: 141

3,950,252, Re. S.N. 838,748, Filed Oct. 3, 1977, Cl. 210/281, UPFLOW FILTER, Edward J. Jordan, et al., Owner of Record: *Jet Aeration Company, Cleveland, Ohio,* Attorney or Agent: George V. Woodling, et al., Ex. Gp.: 176

3,955,835, Re. S.N. 843,125, Filed Oct. 17, 1977, Cl. 285/175, GAS ECONOMIZER, Percy L. Farrington, Owner of Record: *Inventor,* Attorney or Agent: Arnold S. Weintraub, Ex. Gp.: 353

3,960,248, Re. S.N. 835,056, Filed Sept. 21, 1977, Cl. 188/181 R, SPEED SENSING DEVICE, Leonard T. Tribe, Owner of Record: *Kelsey-Hayes Company, Romulus, Mich.,* Attorney or Agent: J. King Harness, et al., Ex. Gp.: 315

4,000,292, Re. S.N. 843,086, Filed Oct. 17, 1977, Cl. 424/272, 6-ARYLOXY-2-OXO-1-AZA-4-OXA (OR THIA)-SPIRO[4,5] DECANES, Roland Yves Mauvernay, et al., Owner of Record: *Centre Europeen de Recherches Mauvernar, Riom, France,* Attorney or Agent: Arnold Sprung, et al., Ex. Gp.: 125

4,017,759, Re. S.N. 841,230, Filed Oct. 11, 1977, Cl. 313/217, DISPLAY PANEL FOR DISPLAYING A BAR OF LIGHT, Donald E. Miller, Owner of Record: *Burroughs Corporation, Detroit, Mich.,* Attorney or Agent: Robert A. Green, Ex. Gp.: 252

4,022,605, Re. S.N. 839,758, Filed Oct. 5, 1977, Cl. 71/67, STABILIZED NON-MEDICAL FUNGICIDAL, BACTERICIDAL AND ALGICIDAL COMPOSITION, Kazumi Konya, et al., Owner of Record: *Kumiai Chemical Industry Company, Ltd., Tokyo, Japan,* Attorney or Agent: Norman F. Oblon, et al., Ex. Gp.: 173

PATENT NOTICES

Certificates of Correction for the Week of Dec. 6, 1977

Re. 29,199	4,017,761	4,033,582	4,041,135
Re. 29,363	4,019,142	4,033,826	4,041,452
3,670,183	4,019,421	4,034,139	4,041,472
3,755,323	4,019,531	4,034,413	4,041,483
3,819,795	4,021,224	4,034,960	4,041,848
3,844,832	4,021,296	4,035,028	4,041,853
3,884,916	4,022,617	4,035,146	4,042,166
3,900,283	4,022,719	4,035,309	4,042,330
3,912,255	4,023,079	4,035,405	4,042,715
3,912,909	4,023,338	4,035,475	4,042,744
3,920,575	4,023,510	4,035,602	4,043,344
3,924,003	4,023,622	4,035,643	4,043,502
3,924,018	4,023,929	4,035,973	4,043,736
3,924,523	4,024,117	4,036,301	4,044,061
3,927,013	4,024,163	4,036,389	4,044,382
3,928,648	4,024,222	4,036,427	4,044,487
3,939,270	4,024,398	4,036,629	4,044,621
3,948,172	4,024,492	4,036,657	4,044,830
3,956,500	4,024,807	4,036,833	4,045,234
3,957,922	4,026,892	4,037,248	4,045,240
3,958,033	4,027,245	4,037,684	4,045,304
3,959,356	4,027,284	4,037,880	4,045,377
3,962,321	4,028,385	4,037,888	4,045,610
3,965,977	4,028,712	4,038,075	4,045,947
3,969,329	4,028,945	4,038,097	4,046,005
3,969,363	4,029,189	4,038,112	4,046,013
3,980,071	4,029,769	4,038,127	4,046,022
3,984,441	4,029,778	4,038,131	4,046,130
3,985,531	4,030,377	4,038,163	4,046,163
3,988,464	4,030,446	4,038,227	4,046,223
3,992,099	4,030,474	4,038,265	4,046,536
3,992,537	4,030,476	4,038,421	4,046,933
3,993,461	4,030,576	4,038,570	4,046,956
3,996,749	4,030,996	4,038,916	4,047,076
3,996,844	4,031,006	4,038,950	4,047,222
3,999,782	4,031,087	4,039,003	4,047,226
4,000,247	4,031,221	4,039,013	4,047,227
4,001,023	4,031,224	4,039,027	4,047,268
4,001,825	4,031,369	4,039,074	4,047,355
4,003,148	4,031,461	4,039,302	4,047,381
4,003,226	4,031,579	4,039,381	4,047,444
4,004,137	4,031,664	4,039,534	4,047,463
4,004,139	4,031,748	4,039,553	4,048,015
4,005,939	4,031,764	4,039,609	4,048,169
4,006,128	4,032,085	4,039,823	4,048,807
4,008,711	4,032,143	4,039,825	4,048,911
4,008,789	4,032,487	4,040,001	4,049,744
4,008,925	4,032,608	4,040,312	4,049,793
4,010,250	4,032,710	4,040,624	4,050,048
4,013,020	4,032,818	4,040,680	4,050,050
4,013,599	4,032,838	4,040,798	4,054,440
4,017,170	4,032,982	4,040,875	4,054,693
4,017,429	4,033,150	4,040,948	4,055,652
4,017,619	4,033,336	4,041,130	

Disclaimers

3,292,117.—*John Bryant,* Birmingham, and *William A. Johnston,* Southfield, Mich. COAXIAL CONNECTOR WITH MEANS FOR PREVENTING AXIAL AND ROTATIONAL MOVEMENT BETWEEN CONNECTOR COMPONENTS. Patent dated Dec. 13, 1966. Disclaimer filed Aug. 8, 1977, by the assignee, *Omni-Spectra, Incorporated.*

Hereby enters this disclaimer to claims 13, 15, 16, 18 and 19 of said patent.

3,858,843.—*Leonard Joseph Hartmann,* Maplewood, Mo. BALL VALVE AND THE LIKE HAVING LOCKING HANDLE. Patent dated Jan. 7, 1975. Disclaimer filed Sept. 28, 1977, by the assignee, *Chemetron Corporation.*

Hereby enters this disclaimer to all claims of said patent.

3,937,411.—*Charles A. Vogel,* and *William T. Lombardi,* San Jose, Calif. TAPE ROLL HOLD-DOWN DEVICE. Patent dated Feb. 10, 1976. Disclaimer filed Oct. 5, 1977, by the assignee, *American Videonetics Corporation.*

Hereby enters this disclaimer to claims 1-3 and 6-7 of said patent.

3,942,632.—*Robert S. Witkoff,* Glen Cove, N.Y. JEWELRY BOX. Patent dated Mar. 9, 1976. Disclaimer filed Aug. 24, 1977, by the assignee, *The Alsten Company.*

The term of this patent subsequent to Dec. 30, 1989, has been disclaimed.

3,981,265.—*Paul B. Gilbert,* Chicago, Ill. COMBINED DIAL SCALE AND STATION INDICATOR. Patent dated Sept. 21, 1976. Disclaimer filed Sept. 29, 1977, by the assignee, *Motorola, Inc.*

Hereby enters this disclaimer to claims 9 through 14 inclusive of said patent.

Dedication

3,836,651.—*Harry W. Rudel* and *Fred A. Kincl,* New York, N.Y. NOVEL ORAL CONTRACEPTIVE COMBINATION. Patent dated Sept. 17, 1974. Dedication filed Oct. 3, 1977, by the assignee, *Biological Concepts, Inc.*

Hereby dedicates to the Public the entire remaining term of said patent.

Patents Available for Licensing or Sale

D. 242,949. FONT OF TYPE. Stephen Earl Diamond, P.O. Box 99238, San Francisco, Calif. 94109.

D. 245,044. DIRECTIONAL LIGHTING SYSTEM. Dorothy F. Pollack, 6026 Declaration Circle, Citrus Heights, Calif. 95610.

3,643,957. GAME BOARD APPARATUS. Clifford F. Bryant, 1512 Oberlin St., Pittsburgh, Pa. 15206.

3,658,895. PREPARATION OF CONCENTRATED ACRYLIC ACID BY TREATMENT WITH A MINERAL ACID AND DUAL STAGE DISTILLTION. Inquiries are to be addressed to: Donald R. Bentz, Esq., Curtis, Morris & Safford, P. C., 530 Fifth Ave., New York, N.Y. 10036.

3,785,538. FINGER-ACTUATED SNAP OPEN CAPS FOR BOTTLES, COLLAPSIBLE TUBES AND THE LIKE. Anthony J. Cocozella, 23 Wyman Road, Braintree, Mass. 02184.

3,785,631. THE PARTING AND BEVEL BURNING DEVICE. Stanley Peter Prye, 2222 Barnard, Houston, Tex. 77098.

3,841,686. PET WASTE PICKUP DEVICE. Joseph Gallo and Lillian Fletcher, 7011 Willoughby Ave., Hollywood, Calif. 90038.

3,899,157. TACK FASTENER AND STRIPPER. Robert Thomas, 30 West Chicago Ave., Chicago, Ill. 60610.

3,920,930. FIELD EFFECT RECORDING AND SEMICONDUCTOR PLAYBACK DEVICES. John J. Sobczyk, 112 3rd St. #c, Seal Beach, Calif. 90740.

3,938,827. SIDE BY SIDE BIKES ASSEMBLY INSTRUCTIONS. Chas. L. Johnson, 4235 McDowell Space 100, Phoenix, Ariz. 85008.

3,953,983. REFRIGERATION METHOD AND REFRIGERATION APPARATUS FOR CARRYING OUT THE METHOD. Ernst Sander. Correspondence to: Craig, Antonelli, 909 Watergate Office Bldg., 2600 Virginia Ave. NW., Washington, D.C. 20037.

4,016,667. SIDE SPRING DOOR ACTION. John Forbes. Box 355, Newport, N.H. 03773.

4,024,682. A-FRAME BUILDING. Billy H. Jamison, Sherman, Tex., Correspondence to: Michael A. O'Neil, 2900 One Main Place, Dallas, Tex. 75250.

4,031,681. WALL CONSTRUCTION. Joseph Charniga, Box 292, New Middletown, Ohio 44442.

4,034,489. HEATED SNOW SHOVEL. John F. Hughes, Jr., Route 112, Saco, Maine 04072.

4,034,685. PRECISION CIRCULAR BLADE GRINDING MACHINE. Will Lustgraaf, 124 Glacier Drive, Lolo, Mont. 59847.

4,037,581. SCREEN DEVICE FOR STOVE OVENS. Thomas Trifletti, Albany, N.Y. Correspondence to: Frederick L. Bergert, Crystal Square No. 5, 1755 Jefferson Davis Hwy., Arlington, Va. 22202.

4,040,313. TELLER SHIELD. James O. Word, 207 Sixth Ave., Hattlesburt, Miss. 39401.

4,043,316. MODULAR DIRECT SOLAR HEAT WINDOW UNIT. Asa S. Arent, M.D., Humboldt, Iowa 50548.

4,045,077. CONVERTRA-BIKE-TOP. James DeVone, Durham, N.C., Correspondence to: DeVone Manufacturing Company, Post Office Box 1285, Durham, N.C. 27702.

4,046,393. PORTABLE ALED. Kenneth Vadnais, Correspondence to: James M. Delmen, 407 N. Main St. 100, Ann Arbor, Mich. 48104.

4,049,009. APPARATUS FOR TRIMMING THE NAILS. Florian Marchand, Correspondence to: George Marchand S.A., CH 2738 Court BE, Switzerland.

The following two patents are offered by CRAFT HOUSE CORPORATION, % Henry K. Leonard, 700 Toledo Bldg., 316 North Michigan, Toledo, Ohio 43624.

3,582,557. BURGLAR AND FIRE ALARM.

3,641,552. CENTRALLY LOCATED ACCESS ALARM SYSTEM.

The following two patents are offered by John O. Richards, 980 Mill Circle Apt. #99, Alliance, Ohio 44601.

3,578,840. REVOLVING REFLECTOR.

3,835,507. ROPE HOLDING DEVICE.

The General Electric Company is prepared to grant nonexclusive licenses under the following patents on reasonable terms to domestic manufacturers.

Applications for licenses may be addressed to: Division Patent Counsel, Switchgear & Distribution Transformer Division. General Electric Company, 6901 Elmwood Ave., Philadelphia, Pa. 19142.

3,814,620. METHOD OF APPLYING A FUSED SILICA COATING TO A SUBSTRATE.

4,048,348. METHOD OF APPLYING A FUSED SILICA COATING TO A SUBSTRATE.

Applications for licenses may be addressed to the Division Patent Counsel, Electronic Systems Division, General Electric Company. Building 3, Room 216, Electronics Park, Syracuse, N.Y. 13201.

3,955,619. HEAT TRRANSFER DEVICE.

3,956,728. SIGNAL CORRELATION SYSTEM.

3,968,490. RADAR MTI PROCESSOR WITH CFAR.

3,974,474. UNDERWATER ELECTROACOUSTIC TRANSDUCER CONSTRUCTION.

Applications for licenses may be addressed to Patent Counsel, Turbine Operations, Turbine Patent Operation, General Electric Company, 1 River Road, Building 18A–5th Floor, Schenectady, N.Y. 12345.

3,158,607. RELAY FOR LOW-SPEED SENSING SYSTEM.

3,260,116. REMOTE READING TEMPERATURE INDICATING SYSTEM.

3,407,638. METHOD FOR FORMING SERRATED OR CORRUGATED HOLLOW TUBES.

3,614,255. THRUST BALANCING ARRANGEMENT FOR STEAM TURBINE.

3,712,272. COMBINED MOISTURE SEPARATOR AND REHEATER.

3,752,599. BUCKET VIBRATION DAMPING DEVICE.

3,853,327. SELF-PRESSURIZING SHAFT SEAL.

4,039,872. GUIDE VANE ASSEMBLY FOR REVERSE FLOW COOLED DYNAMOELECTRIC MACHINE.

Application for license may be addressed to the Patent Counsel, Mobile Radio Prods. Dept., General Electric Company, Lynchburg, Va. 24502.

4,038,605. MESSAGE PREAMBLE DETECTOR.

Application for license may be addressed to the General Electric Company. Construction Materials Division, 100 E. Carmel Drive, Suite 205, Carmel, Ind. 46032.

3,869,639. EMERGENCY LIGHTING SYSTEM USING DIM TO BRIGHT FLASHING OPERATION.

4,019,102. A SUCCESSIVE APPROXIMATION FEEDBACK CONTROL SYSTEM.

4,027,228. PHOTOCUPLED ISOLATED SWITCHING AMPLIFIER CIRCUIT.

General Motors Corporation is prepared to grant non-exclusive licenses under the following patents upon reasonable terms.

Applications for licenses may be addressed to the Director, Patent Section, General Motors Building, 3044 W. Grand Blvd., Detroit, Mich. 48202.

3,861,241. TRANSMISSION WITH SPEED RESPONSIVE SHIFTING IN REVERSE GEARS.

3,884,583. METHOD AND APPARATUS FOR MAGNETICALLY MODULATED RESONANCE ANALYSIS OF GAS.

3,889,780. GREASE RETAINER FOR ENGAGED SPLINES.

3,896,365. POWER CENTER INVERTER HAVING POWER CENTER COMMUTATION DURING OPERATION INTO SHORT CIRCUITS.

The RCA Corporation offers to grant non-exclusive licenses on reasonable terms and conditions under the patents listed below. Inquiries respecting licenses under RCA patents should be addressed to RCA Corporation, Staff Vice President, Domestic Licensing, 30 Rockefeller Plaza, New York, N.Y. 10036.

4,039,370. OPTICALLY MONITORING THE UNDERCUTTING OF A LAYER BEING ETCHED.

4,039,838. HIGH RESOLUTION FLUORESCENT SCREEN AND METHODS OF MAKING AND USING THE SAME.

4,039,857. DYNAMIC BIASING OF ISOLATION BOAT INCLUDING DIFFUSED RESISTORS.

4,039,858. TRANSITION DETECTOR.

4,039,862. LEVEL SHIFT CIRCUIT.

4,039,869. PROTECTION CIRCUIT.

4,039,887. ELECTION EMITTER INCLUDING POROUS ANTIMONY.

4,040,029. MEMORY SYSTEM WITH REDUCED BLOCK DECODING.

4,040,076. CHARGE TRANSFER SKIMMING AND RESET CIRCUIT.

4,040,088. ADAPTOR FOR INTER-RELATING AN EXTERNAL AUDIO INPUT DEVICE WITH A STANDARD TELEVISION RECEIVER AND AN AUDIO RECORDING FOR USE THEREWITH.

4,040,089. DISC MASTER POSITIONING APPARATUS FOR A RECORDING SYSTEM.

4,040,092. SMEAR REDUCTION IN CCD IMAGERS.

4,040,168. FABRICATION METHOD FOR A DUAL GATE FIELD EFFECT TRANSISTOR.

4,040,634. OVERHEAD DISC RECORD GROUNDING APPARATUS.

4,040,635. RELEASABLE STYLUS ARM MAGNETIC COUPLING.

4,041,307. POSITIONING A PLATFORM WITH RESPECT TO RAYS OF A LIGHT SOURCE.

4,041,342. ELECTRON MULTIPLE WITH BEAM CONFINEMENT STRUCTURE.

4,041,347. CATHODE-RAY TUBE HAVING CONDUCTIVE INTERNAL COATING EXHIBITING REDUCED GAS ABSORPTION.

4,041,354. PINCUSHION CORRECTION CIRCUIT.

4,041,357. HIGH VOLTAGE PROTECTION CIRCUIT.

4,041,374. INTERELECTRODE OPEN AND SHORT CIRCUIT TESTER.

4,041,388. TRANSISTOR CIRCUIT.

4,041,408. PUSH-PULL AUDIO AMPLIFIER SYSTEM WITH MUTING.

4,041,486. PULSE STREAM IDENTIFICATION CIRCUIT.

4,041,515. AVALANCHE TRANSISTOR OPERATING ABOVE BREAKDOWN.

4,041,531. TELEVISION SIGNAL PROCESSING APPARATUS INCLUDING A TRANSVERSAL EQUALIZER.

4,041,775. VIBROMETER.

4,042,293. LIQUID CRYSTAL DEVICES HAVING DIODE CHARACTERISTICS.

4,042,382. TEMPERATURE-STABLE NON-MAGNETIC ALLOY.

4,042,841. SELECTIVELY POWERED FLIP-FLOP.

4,044,313. PROTECTIVE NETWORK FOR AN INSULATED-GATE FIELD-EFFECT (IGFET) DIFFERENTIAL AMPLIFIER.

4,044,341. MEMORY ARRAY.

4,044,375. BRIGHTNESS CONTROL APPARATUS.

4,044,379. METHOD AND APPARATUS FOR ELECTROMECHANICAL RECORDING OF SHORT WAVELENGTH MODULATION IN A METAL MASTER.

4,045,133. ANALOG OPTICAL BLOCK PROCESSOR.

4,045,250. METHOD OF MAKING A SEMICONDUCTOR DEVICE.

4,045,318. METHOD OF TRANSFERRING A SURFACE RELIEF PATTERN FROM A POLY(OLEFIN SULFONE) LAYER TO A METAL LAYER.

4,045,688. POWER-ON RESET CIRCUIT.

4,045,694. CURRENT DIVIDER.

4,045,719. REGULATED VOLTAGE SOURCE.

4,045,746. ADJUSTABLE GAIN CURRENT AMPLIFIERS.

4,045,747. COMPLEMENTARY FIELD EFFECT TRANSISTOR AMPLIFIER.

4,045,811. SEMICONDUCTOR INTEGRATED CIRCUIT DEVICE INCLUDING AN ARRAY OF INSULATED GATE FIELD EFFECT TRANSISTORS.

4,045,822. GROUND FAULT INTERRUPTER APPARATUS.

4,045,849. METHOD FOR ASSEMBLING A THERMALLY-SET GETTER SPRING IN A CRT.

4,046,384. STYLUS CLEANING SYSTEM FOR DISC RECORD PLAYER.

4,046,606. SIMULTANEOUS LOCATION OF AREAS HAVING DIFFERENT CONDUCTIVITIES.

4,047,054. THYRISTOR SWITCHING CIRCUIT.

4,047,057. MONOSTABLE SWITCHING CIRCUIT.

4,047,059. COMPARATOR CIRCUIT.

4,047,196. HIGH VOLTAGE SEMICONDUCTOR DEVICE HAVING A NOVEL EDGE CONTOUR.

4,048,544. SWITCHED VERTICAL DEFLECTION SYSTEM.

4,048,597. PLANAR PRINTED CIRCUIT BOARD ARRANGEMENT USEFUL IN THE UHF PORTION OF A TELEVISION TUNER.

4,048,598. UHF TUNING CIRCUIT UTILIZING A VARACTOR DIODE.

4,048,627. ELECTROLUMINESCENT SEMICONDUCTOR DEVICE HAVING A RESTRICTED CURRENT FLOW.

4,049,280. PICKUP CARTRIDGE.

4,049,451. METHOD FOR FORMING A COLOR TELEVISION PICTURE TUBE SCREEN.

4,049,452. REVERSE-PRINTING METHOD FOR PRODUCING CATHODE-RAY-TUBE-SCREEN STRUCTURE.

4,049,459. ORGANIC VOLUME PHASE HOLOGRAPHIC RECORDING MEDIUM.

4,049,845. METHOD FOR PREPARING FILTER-COATED PHOSPHOR PARTICLES.

4,049,872. GLASS FRIT COMPOSITION FOR SEALING WINDOW GLASS.

4,049,977. PHASE-SPLITTER.

4,049,994. LIGHT EMITTING DIODE HAVING A SHORT TRANSIENT RESPONSE TIME.

4,050,018. CAPACITANCE METER BIAS PROTECTION CIRCUIT.

4,050,071. BI-STATIC RADAR SPEED SENSOR.

4,050,967. METHOD OF SELECTIVE ALUMINUM DIFFUSION.

4,051,391. CURRENT-OPERATED CIRCUITS AND STRUCTURES.

4,051,392. CIRCUIT FOR STARTING CURRENT FLOW IN CURRENT AMPLIFIER CIRCUITS.

4,051,441. TRANSISTOR AMPLIFIERS.

4,051,447. RADIO FREQUENCY COUPLER.

4,051,468. APPARATUS AND METHOD FOR MODULATING A FLAT PANEL DISPLAY DEVICE.

4,051,510. HUE CORRECTION APPARATUS CONTROLLED BY CHROMINANCE SATURATION.

4,051,518. BURST GATE PULSE GENERATOR.

4,051,519. PHASE CONTROL CIRCUIT SUITABLE FOR USE IN A TINT CONTROL STAGE OF A COLOR TELEVISION SYSTEM.

4,051,521. VIDEO AMPLIFIER FOR COMBINING LUMINANCE AND CHROMINANCE SIGNALS.

E. I. du Pont de Nemours and Company, assignee, hereby irrevocably offers to grant a royalty-free, irrevocable license under U.S. Patent 3,988,883 issued to Benjamin Chiatze Sze on Stretch-Resistant Bulked Yarn.

Requests for a license under this patent should be directed to: Director of Patent Liaison & Research Services, Textile Fibers Department, E. I. du Pont de Nemours and Company, Wilmington, Del. 19898.

Errata

All reference to Patent No. 4,046,585 to Kuo-Cheng Shen of Canada for Composition and Method for Binding Lignocellulosic Materials appearing in the OFFICIAL GAZETTE of September 6, 1977 should be deleted since no patent was granted.

All reference to Patent No. 4,053,055 to Edward Albert Tarbox of Illinois for A Dispensing Package appearing in the OFFICIAL GAZETTE of October 11, 1977 should be deleted since no patent was granted.

All reference to Patent No. 4,057,314 to Istvan Mathe and Alan Henry Kasper of Illinois for Electrical Connector Including Insulation-Opening Contact appearing in the OFFICIAL GAZETTE of November 8, 1977 should be deleted since no patent was granted.

Special Erratum

Reference to Patent No. 4,031,304 in the Errata appearing in the OFFICIAL GAZETTE of July 5, 1977 (960 O.G. 5) is clarified as follows: Patent No. 4,031,304 was correctly issued on June 21, 1977. However, this patent issued to Brian Bannister of Kalamazoo, Michigan. No patent was granted to Richard W. Neuzil et al. of Illinois on June 21, 1977.

PATENT EXAMINING CORPS

RENE D. TEGTMEYER, Assistant Commissioner
WILLIAM FELDMAN, Deputy Assistant Commissioner

CONDITION OF PATENT APPLICATIONS AS OF NOVEMBER 19, 1977

PATENT EXAMINING GROUPS	Actual Filing Date of Oldest New Case Awaiting Action
CHEMICAL EXAMINING GROUPS	
GENERAL CHEMISTRY AND PETROLEUM CHEMISTRY, GROUP 110—S. N. ZAHARNA, Director. Inorganic Compounds; Inorganic Compositions; Organo-Metal and Organo-Metalloid Chemistry; Metallurgy; Metal Stock; Electro Chemistry; Batteries; Hydrocarbons; Mineral Oil Technology; Lubricating Compositions; Gaseous Compositions; Fuel and Igniting Devices.	5-2-77
GENERAL ORGANIC CHEMISTRY, GROUP 120—A. L. LEAVITT, Director. Heterocyclic, Amides; Alkaloids; Azo; Sulfur; Misc. Esters; Carbohydrates; Herbicides; Poisons; Medicines; Cosmetics; Steroids; Oxo and Oxy; Quinones; Acids; Carboxylic Acid Esters; Acid Anhydrides; Acid Halides.	1-14-77
HIGH POLYMER CHEMISTRY, PLASTICS AND MOLDING, GROUP 140—A. P. KENT, Director. Synthetic Resins; Rubber; Proteins; Macromolecular Carbohydrates; Mixed Synthetic Resin Compositions; Synthetic Resins With Natural Polymers and Resins; Natural Resins; Reclaiming; Pore-Forming; Compositions (Part) e.g.: Coating; Molding; Ink; Adhesive and Abrading Compositions; Molding, Shaping, and Treating Processes.	2-8-77
COATING AND LAMINATING, BLEACHING, DYEING AND PHOTOGRAPHY, GROUP 160—R. FRIEDMAN, Director. Coating; Processes and Misc. Products; Laminating Methods and Apparatus; Stock Materials; Adhesive Bonding; Special Chemical Manufactures; Special Utility Compositions; Bleaching; Dyeing and Photography.	11-26-76
SPECIALIZED CHEMICAL INDUSTRIES AND CHEMICAL ENGINEERING, GROUP 170—H. S. VINCENT, Director. Fertilizers; Foods; Fermentation; Analytical Chemistry; Reactors; Sugar and Starch; Paper Making; Glass Manufacture; Gas; Heating and Illuminating; Cleaning Processes; Liquid Purification; Distillation; Preserving; Liquid, Gas, and Solid Separation; Gas and Liquid Contact Apparatus; Refrigeration; Concentrative Evaporators; Mineral Oils Apparatus; Misc. Physical Processes.	11-3-76
ELECTRICAL EXAMINING GROUPS	
INDUSTRIAL ELECTRONICS, PHYSICS AND RELATED ELEMENTS, GROUP 210—W. L. CARLSON, Director. Generation and Utilization; General Applications; Conversion and Distribution; Heating and Related Art Conductors; Switches; Photography; Motion Pictures; Illumination; Horology; Acoustics; Recorders; Weighing Scales.	8-18-76
SPECIAL LAWS ADMINISTRATION, GROUP 220—C. D. QUARFORTH, Director. Ordnance, Firearms and Ammunition; Radar, Underwater Signalling, Directional Radio, Torpedoes, Seismic Exploring, Radio-Active Batteries; Nuclear Reactors, Powder Metallurgy, Rocket Fuels; Radio-Active Material.	7-2-76
INFORMATION TRANSMISSION, STORAGE AND RETRIEVAL, GROUP 230—J. F. COUCH, Director. Communications; Multiplexing Techniques; Facsimile; Data Processing, Computation and Conversion; Storage Devices and Related Arts.	1-24-77
RECEPTACLES, SANITATION AND CLEANING, WINDING, AND MEASURING, GROUP 240—N. ANSHER, Director. Receptacles; Joint Packing; Conduits; Plumbing Fixtures; Textile Spinning; Food; Agitating; Cleaning; Pressing; Geometrical Instruments; Sound Recording; Winding and Reeling; Measuring and Testing; Indicating.	1-5-77
ELECTRONIC COMPONENT SYSTEMS AND DEVICES, GROUP 250—L. FORMAN, Director. Semi-Conductor and Space Discharge Systems and Devices; Electronic Component Circuits; Wave Transmission Lines and Networks; Optics; Radiant Energy; Measuring.	7-9-76
DESIGNS, GROUP 290—C. D. QUARFORTH, Director. Industrial Arts; Household, Personal and Fine Arts.	5-6-76
MECHANICAL EXAMINING GROUPS	
HANDLING AND TRANSPORTING MEDIA, GROUP 310—D. J. STOCKING, Director. Conveyors; Hoists; Elevators; Article Handling Implements; Store Service; Sheet and Web Feeding; Dispensing; Fluid Sprinkling; Fire Extinguishers; Coin Handling; Check Controlled Apparatus; Classifying and Assorting Solids; Boats; Ships; Aeronautics; Motor and Land Vehicles and Appurtenances; Brakes; Railways and Railway Equipment.	1-28-77
MATERIAL SHAPING, ARTICLE MANUFACTURING, TOOLS, GROUP 320—S. S. MATTHEWS, Director. Manufacturing Processes, Assembling, Combined Machines, Special Article Making; Metal Deforming; Sheet Metal and Wire Working; Metal Fusion—Bonding, Metal Founding; Metallurgical Apparatus: Plastics Working Apparatus; Plastic Block and Earthenware Apparatus: Machine Tools for Shaping or Dividing; Work and Tool Holders, Woodworking; Tools; Cutlery; Jacks.	4-1-77
AMUSEMENT, HUSBANDRY, PERSONAL TREATMENT, INFORMATION, GROUP 330—G. M. FORLENZA, Director. Amusement and Exercising Devices; Projectors; Animal and Plant Husbandry; Butchering; Earth Working and Excavating; Fishing, etc.; Tobacco; Artificial Body Members; Dentistry; Jewelry; Surgery; Toiletry; Printing; Typewriters; Stationery; Information Dissemination.	11-8-76
HEAT, POWER, AND FLUID ENGINEERING, GROUP 340—B. R. GAY, Director. Power Plants; Combustion Engines; Fluid Motors; Reaction Motors; Pumps; Rotary Engines and Pumps; Heat Generation and Exchange; Refrigeration; Ventilation; Drying; Temperature and Humidity Regulation; Machine Elements; Couplings; Gearing; Bearings; Clutches; Power Transmission; Fluid Handling and Control; Lubrication.	11-22-76
GENERAL CONSTRUCTIONS, TEXTILES AND MINING, GROUP 350—M. M. NEWMAN, Director. Joints; Fasteners; Rod, Pipe and Electrical Connectors: Miscellaneous Hardware; Locks; Building Structures; Closure Operators; Bridges; Closures; Earth Engineering; Drilling; Mining; Furniture; Supports; Cabinet Structures; Centrifugal Separations; Coating; Textiles; Apparel and Shoes; Sewing Machines.	3-31-77

Expiration of patents: The patents within the range of numbers indicated below expire during November 1977, except those which may have expired earlier due to shortened terms under the provisions of Public Law 690, 79th Congress, approved August 8, 1946 (60 Stat. 940) and Public Law 619, 83rd Congress, approved August 23, 1954 (68 Stat. 764), or which may have had their terms curtailed by disclaimer under the provisions of 35 U.S.C. 253. Other patents, issued after the dates of the range of numbers indicated below, may have expired before the full term of 17 years for the same reasons, or have lapsed under the provisions of 35 U.S.C. 151.

Patents .... Numbers 2,958,082 to 2,962,719, inclusive
Plant Patents .... Numbers 1,978 to 1,990, inclusive

DEFENSIVE PUBLICATIONS

PUBLISHED DECEMBER 6, 1977

Published at the request of the applicant or owner in accordance with the Notice of Dec. 16, 1969, 869 O.G. 687. The abstracts of Defensive Publication applications are identified by distinctly numbered series and are arranged chronologically. The heading of each abstract indicates the number of pages of specification, including claims and sheets of drawings contained in the application as originally filed. The files of these applications are available to the public for inspection and reproduction may be purchased for 30 cents a sheet.

Defensive Publication applications have not been examined as to the merits of alleged invention. The Patent and Trademark Office makes no assertion as to the novelty of the disclosed subject matter.

T965,001
DYESTUFF WASTE WATER PURIFICATION
John N. Carbone, 3416 Winchester Drive; George S. Dominguez, 904 Chatfield Drive, and Jayanti V. Isharani, 803 Coronado Drive, all of Greensboro, N.C. 27410
Continuation of Ser. No. 600,534, July 31, 1975, abandoned. This application Feb. 15, 1977, Ser. No. 768,915
Int. Cl.² C02B *1/20*
U.S. Cl. 210—52
No Drawing. 19 Pages Specification

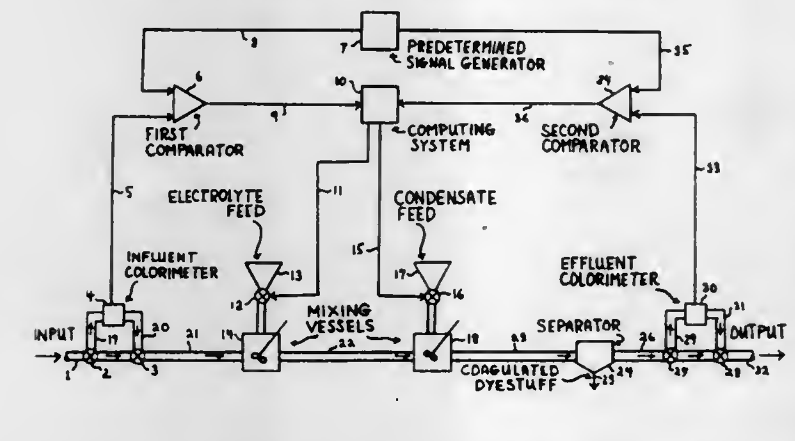

This invention relates to the purification and clarification of a dyestuff and pigment colored waste water by contacting said waste water with an effective amount of a condensation product of formaldehyde and dicyandiamide, and an electrolyte, to coagulate said dyestuff, and removing the resultant coagulate from the waste water.

T965,002
STEAM TREATMENT OF VULCANIZED-SCRAP-RUBBER PYROLYSIS CHAR
Grant Crane, and Edward L. Kay, both of Akron, Ohio, assignors to The Firestone Tire & Rubber Company, Akron, Ohio
Continuation of Ser. No. 709,030, July 27, 1976, abandoned, which is a continuation of Ser. No. 493,438, July 24, 1974, abandoned. This application Feb. 7, 1977, Ser. No. 766,834
Int. Cl.² C01B *31/10;* B01J *21/18*
U.S. Cl. 252—421
3 Sheets Drawing. 18 Pages Specification

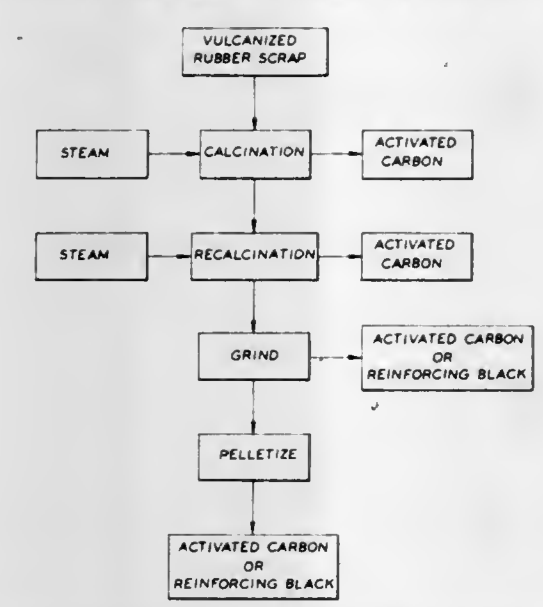

Scrap rubber is pyrolyzed in the substantial absence of air and treated with steam. The steam treatment can be carried out simultaneously with the pyrolysis or subsequently or it may be carried out both in part simultaneously with the pyrolysis and subsequently. Different products are obtained.

T965,003
PROCESS FOR COATING A PIPE
Joannes C. A. Schellekens, and Eric J. Van Beem, both of Amsterdam, Netherlands, assignors to Shell Oil Company
Filed Feb. 22, 1977, Ser. No. 770,500
Claims priority, application United Kingdom, Mar. 5, 1976, 8907/76
Int. Cl.² B05D *1/36, 7/14;* B32B *1/08*
U.S. Cl. 427—409
No Drawing. 10 Pages Specification

A process for coating a pipe, tube, or conduit is disclosed, which process consists of applying to the article a bituminous composition comprising:

a. from 80 to 99 parts by weight of a bituminous component;
b. from 1 to 20 parts by weight of a block copolymer having the general structure $A{-}B{-}(B{-}A)_n$ where A is thermoplastic polymer block of a monoalkenyl arene, B is an elastomeric polymer block of a conjugated diene, and n is an integer from 1–15;
c. from 1 to 60 percent by weight of a wax; and
d. from 1 to 100 percent by weight of an inorganic filler wherein the percentages of wax and filler are based on the combined weight of the bituminous component and the block copolymer.

T965,004
TREATMENT OF TRANSITION METAL COMPOUND AS COMPONENT FOR OLEFIN POLYMERIZATION CATALYST
Anthony David Caunt, 1 Templewood, Welwyn Garden City, Hertfordshire, England
Filed Apr. 18, 1977, Ser. No. 788,642
Claims priority, application United Kingdom, May 7, 1976, 18787/76
Int. Cl.² C08F *4/66, 10/06*
U.S. Cl. 526—128
No Drawing. 33 Pages Specification

A ground product suitable for use as a component of an olefine polymerization catalyst in which a solid compound of a transition metal, for example a titanium trichloride-containing product such as a $TiCl_3—AlCl_3$ composition, is ground with a minor portion of an organo-phosphorus or organo-silicon compound and is also contacted with a minor portion of a specified organo-sulfur compound. A minor portion includes from at least 0.01 and not more than 1 mole of the organic compound for each gram atom of transition metal which is present in the solid component of the transition metal. The organophosphorus compound can be a trihydrocarbyl phosphine or phosphine oxide, such as tributylphosphine or triphenylphosphine. The organo-silicon compound can be an organo-silane, a siloxane or a compound containing at least one Si-N bond, for example a methylsiloxane compound. Preferably, the sulfur-containing organic compound may be selected from sulphone compounds of the formula:

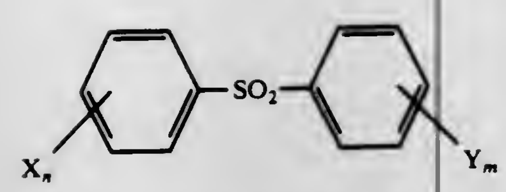

sulphonamide compounds of the formula:

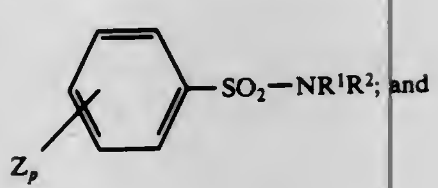

sulphide compounds of the formula:

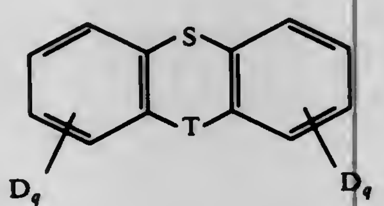

where X is a halogen atom, an alkyl, aryl, alkoxy, aryloxy, alkylthio or arylthio group, or a group —NRR¹, or two groups X can together form a saturated or unsaturated hydrocarbon ring; and Y is a halogen atom, an alkyl, aryl, alkoxy, aryloxy, alkylthio, or arylthio group, or a group —NRR¹, or two groups Y can together form a saturated or unsaturated hydrocarbon ring; or a group X and a group Y may be replaced by a link between the two phenyl groups attached to the $—SO_2—$ group, the linkage being either direct or through a group —O—, $—CH_2—$, —NR—, —S—, or —CO—; Z is a halogen atom, an alkyl, aryl, alkoxy, aryloxy, alkylthio, or arylthio group, or a group —NRR¹, or two groups Z can together form a saturated or unsaturated hydrocarbon ring; D is a halogen atom, an alkyl, aryl, alkoxy, aryloxy, alkylthio or arylthio group, or a group —NRR¹; T is —S—, —O—, —NR¹—, or —CO—; R is a hydrogen atom or a hydrocarbyl group; R¹ is a hydrocarbyl group; R² is a hydrocarbyl group or it can be the group:

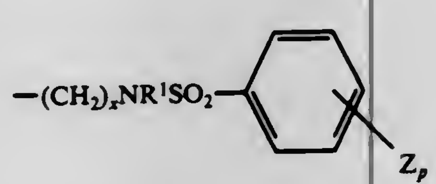

n, m, p and *q* are each, independently, an integer from 0 up to 5; and *x* is a positive integer.

The organo-sulfur compound is an aromatic sulphone, sulphonamide or heterocyclic sulfur compound, for example, diphenylsulphone, or phenoxathiin.

Contacting with the organo-sulfur compound can be effected by grinding for example in a ball mill, and all of the materials can be ground together. A metal halide such as titanium tetrachloride may also be present during the grinding step.

Olefine polymerization catalyst systems which include as a component thereof the transition metal/specific organo-sulfur compound are also disclosed.

T965,005
NUCLEATING AGENTS, RADIATION-SENSITIVE COMPOSITIONS AND PHOTOGRAPHIC ELEMENTS
Ronald E. Leone, and James K. Elwood, both c/o Kodak Park Division, Rochester, N.Y. 14650
Division of Ser. No. 700,981, June 29, 1976. This application Feb. 14, 1977, Ser. No. 768,519
Int. Cl.² C09B *23/00;* C07D *275/04*
U.S. Cl. 542—429
No Drawing. 65 Pages Specification

Heterocyclic N-(acylhydrazinophenyl)thioamide nucleating agents are disclosed as well as radiation-sensitive compositions and elements containing such nucleating agents in combination with silver halide grains capable of forming an internal latent image. The elements can be used to form direct-positive photographic images. Dye image transfer photographic elements are specifically contemplated. A specifically preferred compound class comprised of a combination of preferred moieties can be indicated by the formula:

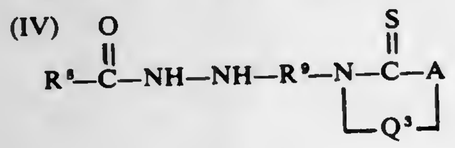

wherein:

A is $=N—R^2$, —S— or —O—;
Q³ is represented by the formula

$$\overset{X}{\overset{\|}{—C}}—\overset{|}{C}=(C—CH=)_{n-1}T^1;$$

X is =S or =O;
T¹ is

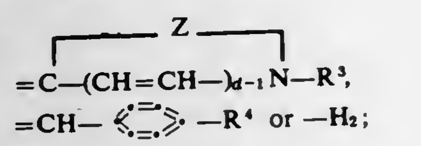

R³ is an alkyl substituent:
R⁴ is hydrogen, an alkyl,

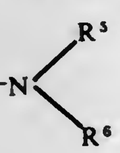

or an alkoxy substituent;

Z represents the non-metallic atoms necessary to complete a basic 5- or 6-membered heterocyclic nucleus of the type found in cyanine dyes having ring-forming atoms chosen from the class consisting of carbon, nitrogen, oxygen, sulfur and selenium;

n and *d* are independently chosen from the integers 1 and 2;

R⁸ is hydrogen, phenyl, methyl, ethyl, propyl or butyl;

R⁹ is a meta- or para-phenylene group;

R², R⁵ and R⁶ are independently chosen from hydrogen, phenyl, alkyl, alkylphenyl and phenyalkyl; and

the alkyl moieties in each instance include from 1 to 6 carbon atoms.

REISSUES

DECEMBER 6, 1977

Matter enclosed in heavy brackets [ ] appears in the original patent but forms no part of this reissue specification; matter printed in italics indicates additions made by reissue.

Re. 29,486
TIMEPIECE
Irving L. Wein, Chicago, Ill., assignor to Clinton Watch Company, Chicago, Ill.
Original No. 3,760,585, dated Sept. 25, 1973, Ser. No. 179,988, Sept. 13, 1971. Application for reissue Nov. 29, 1974, Ser. No. 528,212
Int. Cl.² G04B *39/00, 19/06*
U.S. Cl. 58—91 3 Claims

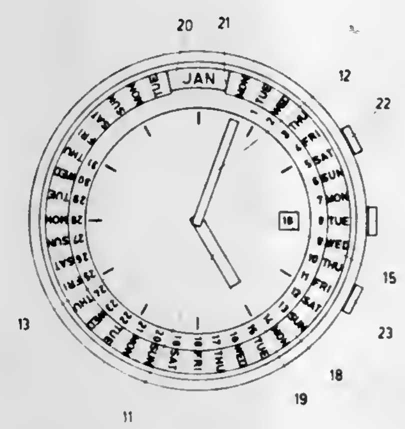

1. A timepiece, comprising indicating means driven by a movement, said indicating means including hands for indicating the hours and minutes and a date ring for indicating the date, characterized in that there are disposed around the said indicating means within the casing of the timepiece a first annular surface carrying indications of the dates of a month of 31 days, a second annular surface concentric with the first one and carrying indications of the consecutive days of the week of at least five consecutive weeks, at least one of said annular surfaces being stationary and having window formed therein, the other of said annular surfaces being disposed on a turning ring which can be rotated manually for radially aligning the indications of the dates and the indications of the days of the week, and a third annular surface carrying indications of the 12 months of the year, said third annular surface being disposed on a turning ring which can be manually rotated for presenting one of the twelve month indications in the window of said at least one stationary annular surface, said surfaces cooperating to form a complete calender of a month.

Re. 29,487
EARPLUGS
Ross Gardner, Jr., Stoughton, Mass., assignor to Cabot Corporation, Boston, Mass.
Original No. 3,811,437, dated May 21, 1974, Ser. No. 192,366, Oct. 26, 1971. Application for reissue Mar. 12, 1976, Ser. No. 666,364
Int. Cl.² A61F *11/02*
U.S. Cl. 128—152 19 Claims

11. An earplug having a size and shape adapted to be compressed and inserted into the human ear canal and there allowed to expand and obturate the ear canal, said earplug comprising a resilient plasticized polymeric foam having a sufficiently high concentration of organic plasticizer therein as to provide said foam with a rate of recovery from 60 percent compression thereof to 40 percent compression thereof of from 1 to 60 seconds and an equilibrium pressure at 40 percent compression thereof of from 0.2 to 1.3 p.s.i.

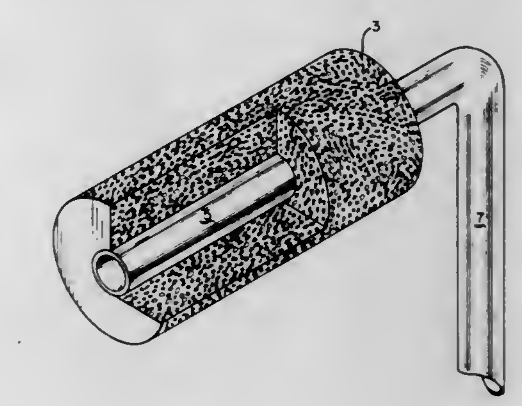

Re. 29,488
FUEL COMPOSITIONS AND ADDITIVE MIXTURES FOR ALLEVIATION OF EXHAUST GAS CATALYST PLUGGING
Marcelian F. Gautreaux, Baton Rouge, La., assignor to Ethyl Corporation, Richmond, Va.
Original No. 3,926,580, dated Dec. 16, 1975, Ser. No. 483,641, June 27, 1974. Application for reissue Sept. 30, 1976, Ser. No. 728,398
Int. Cl.² C10L *1/18*
U.S. Cl. 44—68 40 Claims

1. As a composition of matter, a gasoline for an internal combustion engine comprising

i. about 0.005 -10 grams of manganese per gallon as a cyclopentadienyl manganese tricarbonyl wherein said cyclopentadienyl group is a hydrocarbon group containing 5-17 carbon atoms, and

ii. amount sufficient to reduce the plugging of an exhaust gas catalyst of a compound having the general formula:

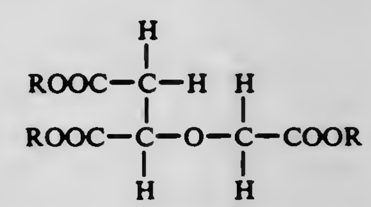

wherein R is independently selected from hydrogen and hydrocarbyl radicals.

Re. 29,489
BIPHENYL SULPHONES
Alan Branford Newton, Welwyn Garden City; John Brewster Rose, Letchworth, both of England, and Victor Jeffrey Leslie, Wilmington, Del., assignors to Imperial Chemical Industries Limited, London, England
Original No. 3,862,990, dated Jan. 28, 1975, Ser. No. 374,977, June 29, 1973. Division of Ser. No. 186,795, Oct. 5, 1971, Pat. No. 3,764,583, which is a continuation-in-part of Ser. No. 60,101, July 31, 1970, abandoned. Application for reissue Dec. 13, 1976, Ser. No. 750,159
Claims priority, application United Kingdom, July 31, 1969, 38438/69
Int. Cl.² C07C *147/10*
U.S. Cl. 260—607 AR 2 Claims

2. A halophenol [according to claim 1] of the formula

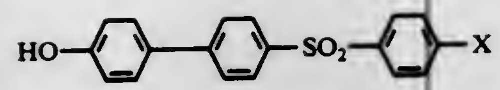

or an alkali metal salt thereof wherein X is halogen.

Re. 29,490

SYSTEM FOR ELECTRONIC MODIFICATION OF SOUND

Ramzi A. Shamma, 1808 Chapel Hill Road, Durham, N.C. 27707

Original No. 3,848,092, dated Nov. 12, 1974, Ser. No. 375,366, July 2, 1973. Continuation-in-part of Ser. No. 191,632, Oct. 22, 1971, abandoned, which is a continuation of Ser. No. 74,869, Sept. 23, 1970, abandoned, which is a continuation of Ser. No. 701,987, Jan. 31, 1968, abandoned. Application for reissue Oct. 6, 1976, Ser. No. 730,066

Int. Cl.² H04C *3/12*

U.S. Cl. 179—1 VL **8 Claims**

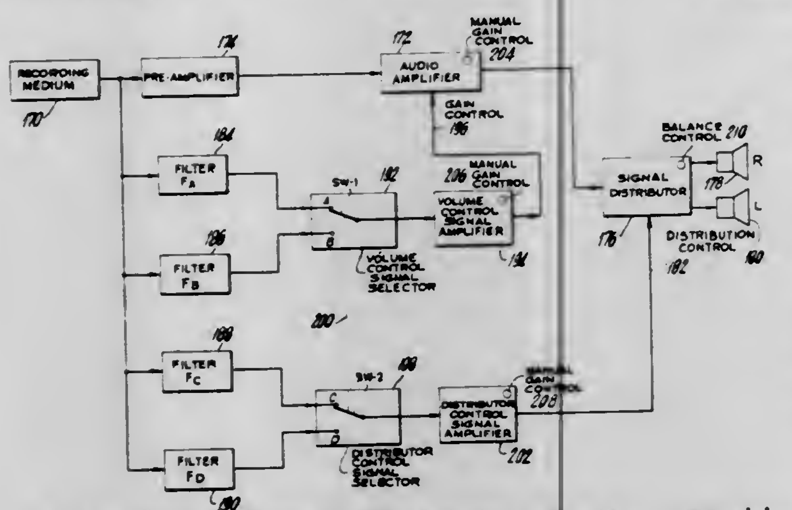

1. A system for modifying a sound program comprising means for providing an audio signal; means for amplifying said audio signal and presenting the same as an output signal; signal distributing means connected to said amplifying means for dividing said output signal into two parts [a first speaker connected to said signal distributing means for receiving one of said output signal parts; a second speaker spaced from said first speaker and connected to said signal distributing means for receiving the other of said output signal parts,] *for distribution to first and second spaced speakers;* said signal distributing means including means for increasing the relative amplitude of one of said parts while decreasing the relative amplitude of the other of said parts; said audio signal providing means comprising a recording medium having a program signal within the audio frequency range and a first control signal [having a first frequency outside of the audio frequency range and] having a first preselected and varying [amplitude] pattern *of a parameter thereof* corresponding to a first desired relative distribution of said output signal between [said] *the* speakers, and a second control signal [at a second frequency outside the audio frequency range and different than said first frequency and] having a second preselected and varying [amplitude] pattern *of the same parameter as that of said first control signal and* different than that of said first control signal and corresponding to a second desired relative distribution of said output signal between [said] *the* speakers, said first and second control signals being [superimposed on said program signal and] recorded on a [common] recording path on *the same* recording medium as said program signal; and means operatively interposed between said recording medium and said signal distributing means for [separating said first and second control signals from said program signal and for] coupling said control signals to said signal distributing means, said signal distributing means further including means for selectively applying only one of said first and second control signals to said amplitude decreasing and increasing means, said signal distributing means being responsive to the [amplitude] *variations of said parameter* of said one of said control signals to vary the relative amplitudes of said parts of said output signal in accordance with the varying [amplitude] patterns of *said parameter of* said one of said control signals, whereby a controlled shifting movement of the apparent sound between [said] *the* first and second speakers is created.

PLANT PATENTS

GRANTED DECEMBER 6, 1977

Illustrations for plant patents are usually in color and therefore it is not practicable to reproduce the drawing.

4,161

ORANGE TREE

Andrew Thoro, 5864 SW. 76th St., Miami, Fla. 33143

Filed Dec. 6, 1976, Ser. No. 722,591

Int. Cl.² A01H *5/03*

U.S. Cl. Plt.—45 **1 Claim**

1. A new and distinct variety of Temple orange tree, substantially as described, characterized particularly by the seedless quality of the fruit.

4,162

CHRYSANTHEMUM NAMED BRONZE DOLLY

Walter Grunwald, Westbury, N.Y., assignor to Pan-American Plant Company, West Chicago, Ill.

Filed Feb. 14, 1977, Ser. No. 768,054

Int. Cl.² A01H *5/00*

U.S. Cl. Plt.—79 **1 Claim**

1. A new variety of chrysanthemum plant, substantially as herein shown and described, characterized by the medium bronze coloration of its flowers and their somewhat larger size as compared to the parent variety; and ability to be flowered the year around with a substantially uniform 9-week response.

PATENTS

GRANTED DECEMBER 6, 1977

ERRATA

For CLASS	See PATENT NO.
407-061	4,060,880
407-022	4,060,881
083-404.4	4,061,070
162-019	4,061,193
366-340	4,061,313
366-145	4,061,314
366-111	4,061,315
366-303	4,061,316
308-001 R	4,061,374
308-003.6	4,061,375
308-008.2	4,061,376
308-207 R	4,061,377
312-020	4,061,378
312-201	4,061,379
339-008 R	4,061,380
339-008 P	4,061,381
188-206 A	4,061,429
401-216	4,061,430
062-155	4,061,482
062-268	4,061,483
134-095	4,061,504
250-199	4,061,577
250-330	4,061,578
544-016	4,061,630
544-053	4,061,631
544-060	4,061,632
544-106	4,061,633
544-158	4,061,634
544-172	4,061,635
560-026	4,061,662
560-053	4,061,666
560-261	4,061,667
424-273 R	4,061,727
423-235	4,061,743
424-304	4,061,791
526-114	4,061,857
526-067	4,061,858
536-088	4,061,859
542-462	4,061,860
256-026	4,061,864
526-001	4,061,869
235-437	4,061,900
364-436	4,061,902
364-436	4,061,903
364-608	4,061,904
364-724	4,061,905

ERRATA – continued

364–735	4,061,906
364–718	4,061,907
235–302.3	4,061,908
364–851	4,061,909
362–034	4,061,910
362–020	4,061,911
362–287	4,061,912
362–357	4,061,913
363–022	4,061,957
363–081	4,061,958
338–032 H	4,061,988
365–182	4,061,999
365–203	4,062,000
365–049	4,062,001
365–027	4,062,002
365–016	4,062,003
340–347 DA	4,062,013
340–347 DD	4,062,014

PATENTS

GRANTED DECEMBER 6, 1977

NOTE—A cross reference listing of applications published under the second Trial Voluntary Protest Program is located in the back of this Issue. These entries will be in numerical order by document publication number.

GENERAL AND MECHANICAL

4,060,852
STORM CUSHION
Dwight S. Meeks, 470 Fairview Road SW., Camden, Ark. 71701
Filed Jan. 20, 1976, Ser. No. 650,617
Int. Cl.[2] A41D *15/00*
U.S. Cl. 2—84 **8 Claims**

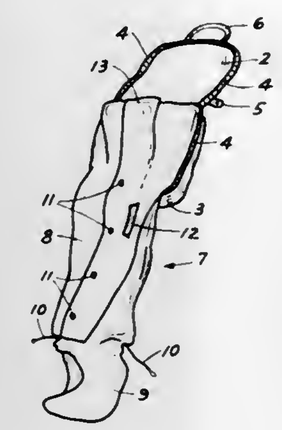

1. A storm cushion comprising:
a padded cushion having a top portion or cover and a bottom portion joined to said cover along a first edge of said cushion;
b. a one piece protective garment disposed inside said cushion between said cover and said bottom portion and attached to said bottom portion on all four sides of said bottom portion with said first edge attached to and coextensive with the rear bottom edge of said protective garment to form a padded seat for said protective garment; and
c. closure means carried by said cover and said bottom portion of said cushion to releasably secure said protective garment inside cushion.

4,060,853
GARMENT
Horacio Carlos Gabarro, 11 de Setiembre St., No. 285, Ramos Mejia, Buenos Aires, Argentina
Filed Sept. 2, 1976, Ser. No. 719,999
Claims priority, application Argentina, Sept. 5, 1975, 260282
Int. Cl.[2] A41D *1/04*
U.S. Cl. 2—108 **5 Claims**

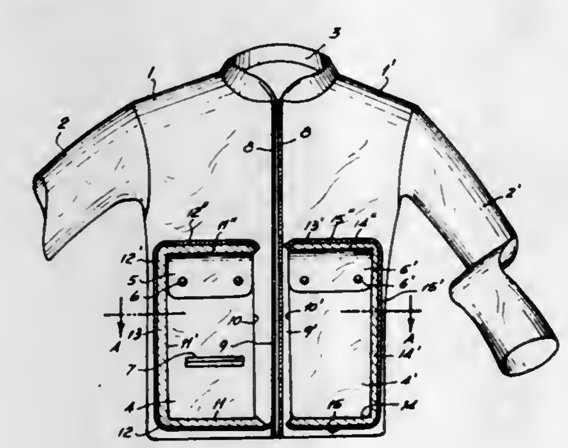

1. A garment comprising:
a. a main body portion having separable edges that are openable along a vertical front center line;
b. two equal-sized, bellows pockets having approximately rectangular outlines and closeable top openings for access to the interiors of said pockets;
c. said pockets being permanently attached to the exterior of said body portion of said garment and arranged to be opposite each other on opposite sides of said front center line in regions adjacent said separable edges;
d. separable fastener means extending vertically along said front center line for openably closing said separable edges along the front of said garment in the region between said pockets;
e. detachable fastening means extending around three sides of each respective pocket to extend along the top edges of each pocket, along the lateral edges of each pocket remote from said front center line, and along the bottom edges of each pocket;
f. said pockets being sized and positioned so that the remainder of said garment other than said pockets can be folded to fit within said rectangular outline of said pockets and contained between said pockets when said pockets are arranged back to back;
g. said detachable fasteners extending around three sides of said pockets being connectable to each other to fasten said pockets to each other along three respective sides of said pockets to form a partially closed wallet containing said remainder of said garment; and
h. said separable fastener extending along the front center line of said garment being closeable to connect said separable edges of said garment to close said wallet by effecting a closure between the fourth sides of said pockets along said front center line.

4,060,854
BELT AND BUCKLE ASSEMBLY
Harvey William Friedman, Longmeadow, and Donald Wyman Corey, Wilbraham, both of Mass., assignors to Buxton, Incorporated, Agawam, Mass.
Continuation of Ser. No. 661,603, Feb. 26, 1976, abandoned. This application Jan. 24, 1977, Ser. No. 762,198
Int. Cl.[2] A41F *3/02*
U.S. Cl. 2—338 **1 Claim**

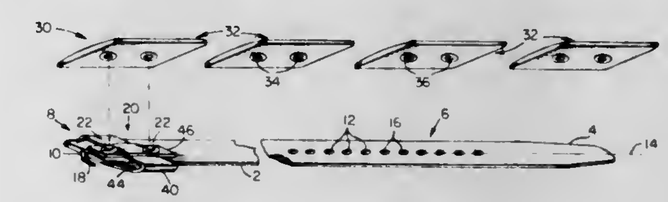

1. Belt and buckle assembly comprising a belt member having means for interconnecting first and second ends thereof, a buckle member having first and second recesses therein, said belt member being further provided with first and second rivet means for engagement with said first and second recesses in said buckle member for recciving and releasably retaining said buckle member, said buckle member being distinct from said interconnecting means, said belt member second end being provided with a loop member mounted thereon and affording an opening for receiving said belt member first end, said loop member being held on said second end by way of a strap member affixed to said second end by said first rivet, said first rivet means further comprising means for retaining said interconnecting means on said second end of said belt member.

4,060,855
PAD FOR PROTECTIVE HELMET

Frederick A. Rappleyea, Park Ridge, Ill., assignor to The Kendall Company, Boston, Mass.
Continuation-in-part of Ser. No. 584,088, June 5, 1975, Pat. No. 3,994,021. This application Sept. 1, 1976, Ser. No. 719,490
Int. Cl.^{2} A42B *3/00*
U.S. Cl. 2—413 **7 Claims**

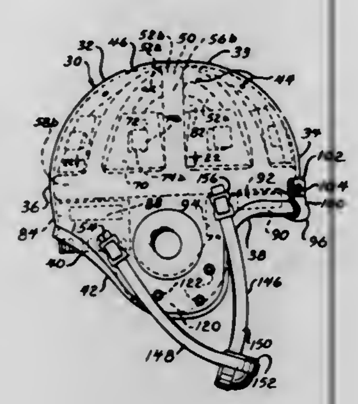

1. Protective headgear, comprising:
a helmet;
pad means comprising, a resilient foam inner pad, a thin flexible front cover sheet of a foam material being formed into a configuration defining a cavity of a shape to closely receive and cover inner side surfaces of said inner pad, and a back cover sheet of flexible material covering a back surface of said inner pad and joined to said front cover sheet along bond lines adjacent a back portion of the inner pad and extending around sides of the inner pad; and
means for attaching the pad means to the helmet.

4,060,856
SURGICAL USE OF A LARYNGEAL PROSTHESIS

Nigel Edwards, Bristol, England, assignor to National Research Development Corporation, London, England
Continuation of Ser. No. 554,125, Feb. 28, 1975. This application Jan. 28, 1977, Ser. No. 763,697
Claims priority, application United Kingdom, Mar. 1, 1974, 9345/74
Int. Cl.^{2} A61F *1/20*
U.S. Cl. 3—1.3 **2 Claims**

1. The use of a laryngeal prosthesis for a laryngectomee, which prosthesis comprises a hollowed body having first and second tubes connected thereto, said body being apertured to provide a valve function allowing selective opening and closure of the hollow of said body relative to the exterior thereof, and which use comprises:
surgically forming in said laryngectomee a tracheostome sited in the midline region of the neck,
surgically forming in said laryngectomee a similarly sited fistula extending upwardly to a location adjacent the tongue base,
surgically forming a pseudo-glottis in the inner end portion of said fistula, and
respectively locating said tubes in said tracheostome and fistula with said body located outside the laryngectomy, said second tube being located only in the outer end portion of said fistula to avoid overlaying said pseudo-glottis, and said valve function serving to open said body to communicate said fistula with the external atmosphere for respiration and to close said body to communicate said tubes therethrough for phonation by activation of said pseudo-glottis.

4,060,857
WATER FLUSHING DEVICE

Lucien Couton, 49-51 rue de Soissons, Casablanca, Morocco
Filed Feb. 10, 1976, Ser. No. 656,976
Claims priority, application Switzerland, June 2, 1975, 7071/75
Int. Cl.^{2} E03D *1/36, 3/10*
U.S. Cl. 4—26 **3 Claims**

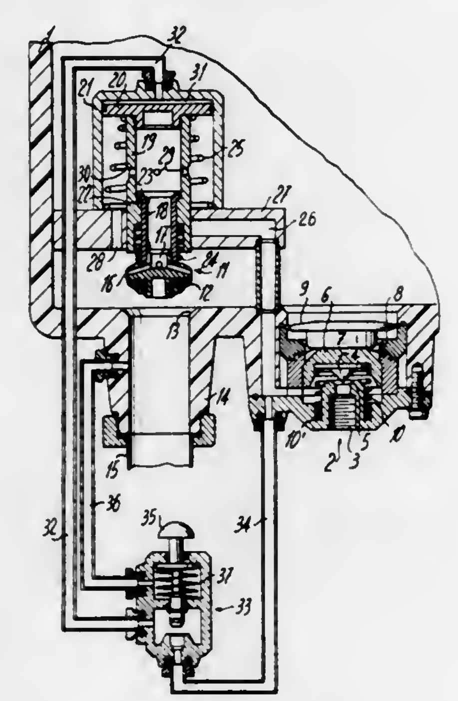

1. A water flushing device comprising: a fluid-tight tank; means for delivering water to the tank to trap and compress a quantity of air in the tank above the level of water; means defining a water-flushing outlet in the tank; a tank flushing valve movable between a closed position closing said outlet and an open, flushing position, hydraulic actuating means controlling said flushing valve, said actuating means including a cylinder, a piston slidable in said cylinder, said flushing valve slidably connected with said piston, spring means normally biasing said piston in an upward direction and said flushing valve to an open flushing position; and piston including a slide valve for preventing the delivery of water to the tank when said flushing valve is in the open position, said piston further including an upper face and a lower face, a control valve, first pipe means connected with said control valve and with the top of said cylinder above the upper face of said piston, second pipe means connected with said means for delivering water to the tank and with said control valve, third pipe means connected with said control valve and the atmosphere, whereby actuation of said control valve permits selective connection of the upper face of said piston to water pressure or to atmospheric pressure through said first and third pipe means respectively, causing said flushing valve to move between an open and closed position and causing said slide valve to turn on the water supply to the tank when the flushing valve closes and cut off the water supply to the tank when the flushing valve opens.

4,060,858
SELF-CENTERING TOILET VALVE

Emil L. Fabian, 553 W. 38th St., San Pedro, Calif. 90731
Filed Jan. 21, 1976, Ser. No. 651,066
Int. Cl.^{2} E03D *1/34*
U.S. Cl. 4—57 R **7 Claims**

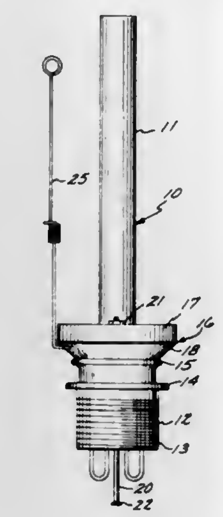

1. A replacement valve assembly adapted for insertion into the seat of a flush outlet of a toilet holding tank, comprising:
a frusto-conical flexible valve seal conformed for receipt in said valve seat;
a buoyant disc attached to the upper surface of said valve seat;
a centering shaft concentrically attached to said disc and said seal to extend axially therefrom in a direction away from the lower surface of said seal; and
a centering yoke assembly supporting in contilener a coiled spring guide adaped to telescopically receive said centering shaft, a plurality of flexible fingers extending from the lower end of said guide, the free ends of said fingers extending beyond the dimensions of said outlet whereby an insertion of said fingers into said outlet maintains fingers in position.

4,060,859
MALE URINATING AID

Joseph B. Anderson, 19936 Moenart St., Detroit, Mich. 48212
Filed July 7, 1976, Ser. No. 703,186
Int. Cl.^{2} E03D *13/00*
U.S. Cl. 4—102 **2 Claims**

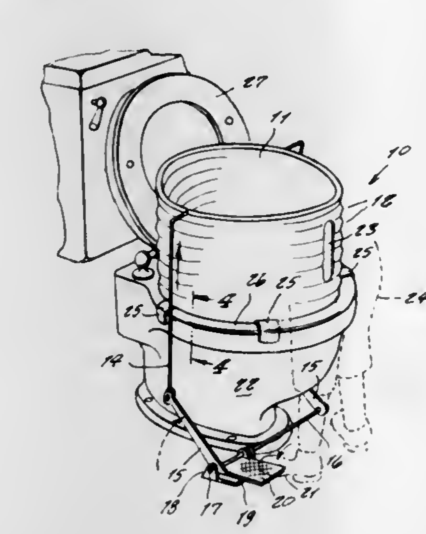

1. A male urinating aid for use with a toilet having a toilet bowl and a seat, comprising in combination, a cylindrical shield made of resilient material, said shield being made to incorporate accordion pleats so that said shield is readily collapsible by gravity to a collapsed inoperative position, means for mounting said shield inside the toilet bowl in said collapsed position beneath the toilet seat; and means for raising the shield from the collapsed inoperative position to a raised operative position above the toilet bowl said means for raising the shield including a circular stiff wire secured to the upper edge of said shield, the diametrically opposite sides of said circular wire being pivotally attached to the upper ends of a pair of downwardly extending links, lower ends of said links being pivotally attached to a pair of levers pivotable about a fulcrum means on a base plate, and said levers being integral with a foot pedal for being downwardly depressed to raise said shield to the raised operative position; and wherein the front end of said shield includes a vertical slit; and wherein said means for mounting the shield inside the toilet bowl includes a plurality of brackets mountable over an upper edge of the toilet bowl, said brackets supporting said shield when in a collapsed inoperative position.

4,060,860
BRAKING SYSTEM FOR MOTORIZED SWIMMING POOL COVERS

Joe H. Lamb, 3500 Hillside Lane, Salt Lake City, Utah 84109
Filed Mar. 31, 1976, Ser. No. 672,162
Int. Cl.^{2} E04H *3/16, 3/18*
U.S. Cl. 4—172.14 **3 Claims**

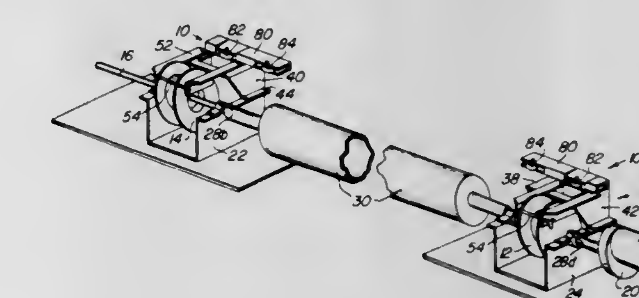

1. In an improved swimming pool cover apparatus which includes a swimming pool cover having one of its ends fixed to a cover collection drum carried on a rotatable shaft to permit the swimming pool cover to be collection on said drum and released therefrom, draw cords connected to the non-fixed end of said swimming pool cover and extending out and back for connection to a pair of draw cord collecting reels carried on said shaft and positioned one on either side of said cover collection drum, means for selectively rotating said cover collecting drum and said draw cord collecting reels and thereby permit the swimming pool, said improvement comprising a pair of spaced apart arms pivotally mounted at one of its ends to a support member mounted in proximity of said draw cord collecting reels for movement in a plane horizontal thereto, opposing brake shoes mounted to said arms and a means for urging said brake shoes toward each other.

4,060,861
PROTECTIVE DEVICE FOR A TOILET LID

Dennis G. Lawrence, and Anne M. Lawrence, both of 92 Mount Vernon St., Fitchburg, Mass. 01420
Filed May 12, 1976, Ser. No. 685,814
Int. Cl.^{2} A47K *13/00*
U.S. Cl. 4—253 **3 Claims**

1. In combination with a toilet including a bowl, a toilet seat, and a lid, a latch for the lid comprising a member including a foot member, a column thereon, and a relatively enlarged and elongated hold-down latching member, the foot member being receivable on the toilet bowl between the toilet bowl and the toilet seat, and the protective hold-down member overlying the lid of the toilet and extending generally radially with respect thereto, the foot and hold-down member being substantially rigid, wherein the column is in two telescoping parts, said parts comprising one part forming a part of the foot member

and the other part being a part of the hold-down member, means for adjusting the height of said column by adjusting the

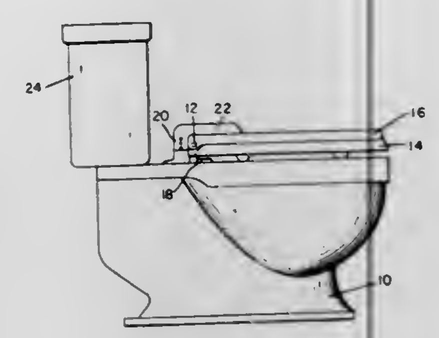

parts relatively to each other, and means to secure the parts in adjusted position.

4,060,862
BOX SPRING ASSEMBLY HAVING SERPENTINE RIGHT ANGLE BEND SPRINGS THEREIN
John P. Kitchen, Georgetown, and Neville L. Riddle, Lexington, both of Ky., assignors to Hoover Ball and Bearing Company, Saline, Mich.
Filed Apr. 28, 1976, Ser. No. 681,132
Int. Cl.^{2} A47C *23/04*
U.S. Cl. 5—260 **4 Claims**

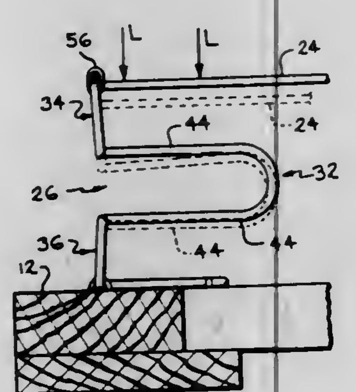

1. In a box spring assembly which includes a generally rectangular frame, a plurality of main wire springs arranged on said frame so that some of said springs are perpendicular relative to each other and others are parallel to each other, each of said springs having an elongated body portion which is a substantially straight length of wire arranged above said frame and downwardly extending end portions, each of which is of serpentine shape and has a pair of angularly related sections, one of each pair underlying and being positioned generally in the plane of an end section of said body portion and another one of each pair extending generally perpendicular to said body portion, said end sections being secured to said frame adjacent the periphery thereof and being capable of flexing movement toward said frame when loaded and away from said frame when unloaded, said one section of said end portion being in a substantially vertical plane and having generally horizontal parallel legs and a return bent-upon-itself connector extending therebetween, said legs being subjected to both bending and twisting stresses during said flexing movement.

4,060,863
CUSHIONS OR PILLOWS
Ashley Graham Craig, Wellington, New Zealand, assignor to Concraig Holdings Limited, London, England
Filed Nov. 8, 1976, Ser. No. 739,990
Int. Cl.^{2} A47C *23/00, 13/00*
U.S. Cl. 5—337 **12 Claims**

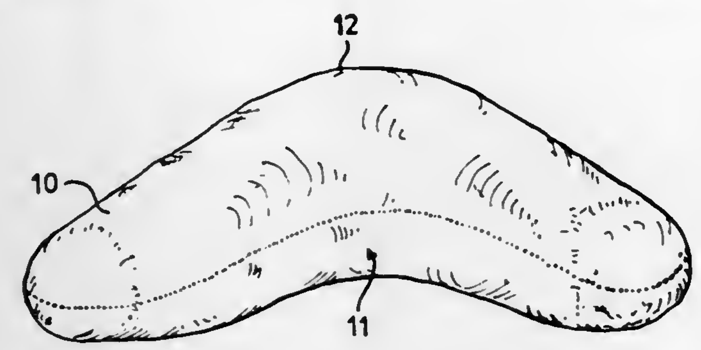

1. A cushion or pillow comprising:
a flexible elongate generally V-shaped body having arms which are of equal length and which are connected together at one end to form an apex section, said apex section having an outer surface and an inner surface which is disposed between said arms;
said apex section being concave in three intersecting planes which are at substantially right angles with each other so that said arms form an angle with each other and the thickness of said body adjacent said outer surface exceeds that thickness adjacent said inner surface, said body thereby presenting a surface which is substantially flat from top to bottom when said body is in a folded configuration with said arms substantially in contact with each other.

4,060,864
BOAT CONSTRUCTION INCORPORATING FLOTATION MEANS
Richard G. Woolworth, Lancaster, Pa., assignor to Woodstream Corporation, Lititz, Pa.
Filed May 3, 1976, Ser. No. 682,636
Int. Cl.^{2} B63B *3/09, 3/28*
U.S. Cl. 9—6 M **8 Claims**

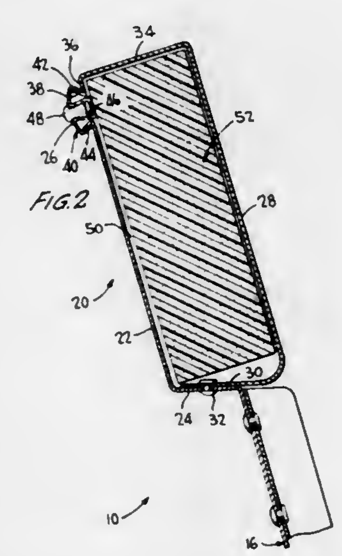

8. A boat comprising a hull means including a bottom portion and upstanding wall portions, said hull means having an inner surface, an outer surface, longitudinally extending, laterally spaced sides, sponson means along at least a portion of each side of said hull means, said sponson means including upper and lower ends, inner and outer portions and defining an enclosed flotation chamber, flotation means carried within said flotation chamber, said sponson means being defined by a first upwardly extending member having upper and lower end portions, a second upwardly extending manner having upper

and lower end portions, the major extent of said second member being spaced laterally from the major extent of said first member, and a laterally directed flange at said upper end portion of said second member extending over said upper end portion of said first member, said upper end portion of said second member terminating in a second member lip means, and connecting means resiliently engaging said upper end portion of said first member with said second member lip means to secure said flotation means within said flotation chamber, one of the members of said sponson means being integral with said hull, securing means connecting said lower end portion of the other of said members to said hull means, and with laterally extending, longitudinally spaced, strengthening rib means spanning said bottom and upstanding wall portions of said hull means, said lower end portion of said other member extending between terminal portions of said strengthening rib means and the inner surface of said upstanding wall portions of said hull means, and said securing means simultaneously connecting said other members and said strengthening rib means to said upstanding wall portions of said hull means.

4,060,865
BOAT CONSTRUCTION INCORPORATING FLOTATION MEANS
Richard G. Woolworth, Lancaster, Pa., assignor to Woodstream Corporation, Lititz, Pa.
Continuation-in-part of Ser. No. 682,636, May 3, 1976. This application Aug. 27, 1976, Ser. No. 718,322
Int. Cl.^{2} B63B *3/09*
U.S. Cl. 9—6 M **5 Claims**

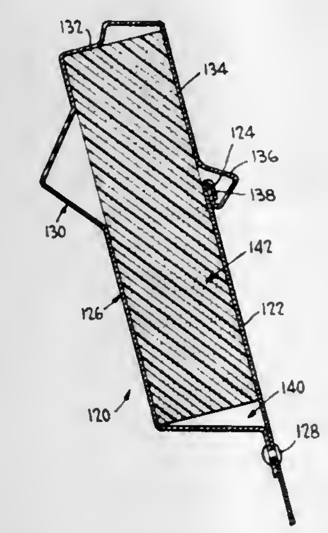

1. A boat comprising a hull means including a bottom portion and upstanding wall portions, said hull means having an inner surface, an outer surface, longitudinally extending, laterally spaced sides, sponson means along at least a portion of each side of said hull means, said sponson means including upper and lower ends, inner and outer portions and defining an enclosed flotation chamber, flotation means carried within said flotation chamber, said sponson means being defined by a first upwardly extending member having upper and lower end portions, a second upwardly extending member having upper and lower end portions, the major extent of said second member being spaced laterally from the major extent of said first member, and a laterally directed flange at said upper end portion of said second member extending over said upper end portion of said first member, said upper end portion of said second member terminating in a second member lip means, and connecting means resiliently engaging said upper end portion of said first member with said second member lip means to secure said flotation means within said flotation chamber, said upper end portion of said first member terminating in a first member lip means including an outwardly and downwardly reverted first lip member, said second member including an inwardly and downwardly extending end portion terminating in an upwardly extending second lip member engaged under said first lip member, and said connecting means being defined by the resilience of said second member, said resilience being independent of the flotation means, and said resilience normally biasing said second lip member into securing engagement with said first lip member for maintaining said flotation means within said flotation chamber.

4,060,866
PNEUMATIC AQUATIC DEVICE
Walter L. Robinson, P.O. Box 642, Fort Bragg, N.C. 28302
Continuation-in-part of Ser. No. 461,637, April 17, 1974. This application Oct. 18, 1976, Ser. No. 733,531
Int. Cl.^{2} A63C *15/02*
U.S. Cl. 9—310 D **12 Claims**

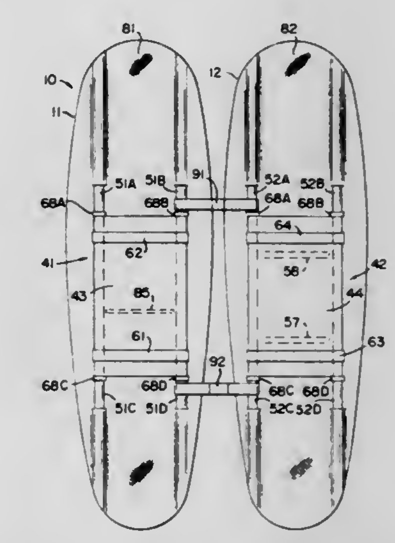

1. An inflatable aquatic device; comprising in combination:
plural aquatic members each having a plurality of flexible gas chamber means for containing a gas to provide buoyancy;
each of said plural aquatic members including a rigid frame having a plate region and a plurality of support means extending relative to said plate region;
means for securing said rigid frame to said flexible gas chamber means establishing plural substantially rigid aquatic members;
said means for securing said rigid frame to said flexible gas chamber means including a covering material adapted to substantially encompass said flexible gas chamber means;
said covering material having a plurality of covering formed apertures for receiving said plurality of support means extending relative to said plate means; and
connecting means for interconnecting said plural aquatic members to allow only limited relative movement therebetween.

4,060,867
INFLATABLE LIFE VEST
David D. Miller, Miami Springs, Fla., assignor to American Safety Equipment Corporation, Encino, Calif.
Continuation of Ser. No. 535,950, Dec. 23, 1974, abandoned. This application Aug. 23, 1976, Ser. No. 716,827
Int. Cl.^{2} B63C *9/16*
U.S. Cl. 9—313 **10 Claims**

1. In a life vest including buoyancy means to support the body of a person, gas supply means for supplying gas to the interior of the buoyancy means, the buoyancy means comprising front and rear tube means, each of the tube means having front and rear walls connected together along the marginal edges thereof in an airtight manner, the rear tube and the front tube being connected together, the buoyancy means having an inside marginal portion and an outside marginal portion, the improvement comprising:
the gas supply means comprising gas supply cartridge means for holding a given amount of gas under pressure and for releasing the gas into the tube means, the gas supply means

further comprising oral delivery means for supplying an additional amount of gas to the tube means.

temporary connecting means on the tube means sufficiently strong to remain connected after release of the gas from said supply cartridge means holding corresponding sections of the tube means together after the supply cartridge means has released its said given amount of gas into the tube means, the buoyancy means having a first volume when the temporary connecting means is holding the corresponding sections of the tube means together after

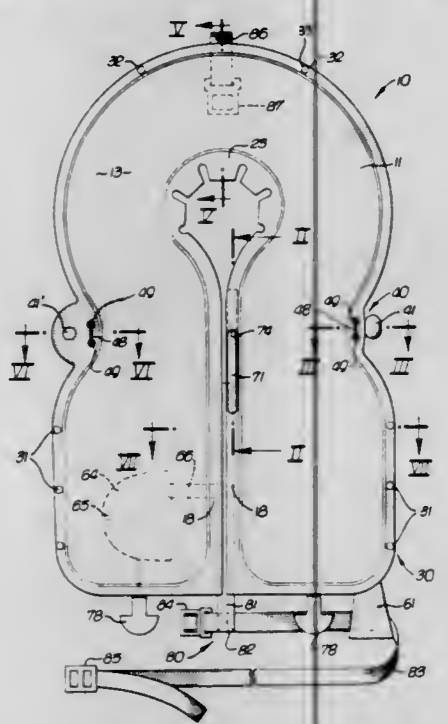

inflation by said given amount of gas from said gas supply cartridge means, the first volume of gas from the gas supply cartridge means providing sufficient buoyancy to support the body and filling said buoyancy means to less than the capacity it has after release of the temporary connecting means which releases the tube means, said tube means having a second volume greater than said first volume upon release of said temporary connecting means whereby additional gas may be supplied through the oral buoyancy means with a second volume to provide additional buoyancy to the body.

4,060,868

POWDER APPLYING APPARATUS AND PROCESS FOR MAKING SELF-LOCKING THREADED ELEMENTS

Maynard Arnold Axvig, Westminster, and Jose Asuncion Franco, Los Angeles, both of Calif., assignors to USM Corporation, Boston, Mass.

Filed Jan. 17, 1977, Ser. No. 760,137

Int. Cl.² B23G *9/00;* **B05B** *1/00, 7/14*

U.S. Cl. 10—72 R **9 Claims**

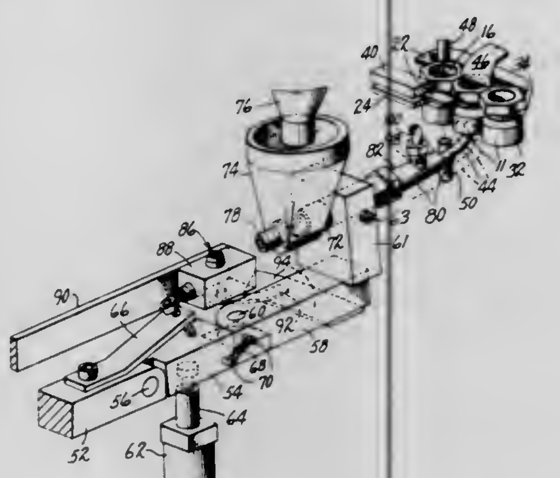

1. In an apparatus for applying locking patches of resilient heat softenable resin to internally threaded articles having openings at both ends comprising:

a support for conveying at a uniform continuous speed for treatment a uniform succession of said threaded articles with the openings at the ends of said articles substantially uncovered,

means for heating said threaded portions of said articles to a temperature above the softening point of said resin,

means for providing a stream of fine particles of said resin entrained in a gaseous jet,

means including a guide for directing said stream of resin particles through the opening at a first end of one of said articles against an area of the threaded portion of said one article during movement in said path to cause said resin particles to be softened by heat from said threaded portion and to adhere to said area, and

vacuum exhaust means adjacent the opening at the other end of said article on said support in operative relation to draw air through said threaded portions to reduce deposition of resin particles in undesired areas of said articles and to draw off resin particles which have passed through said threaded portions, the improvement which comprises control means responsive to movement of a repeating feature in the articles of said succession past a reference location to activate said means providing a stream of resin particles when said guide is in said stream-directing relationship to a threaded area and to deactivate said means for providing a stream of resin particles when said guide is not in said stream-directing relationship, said means for providing a stream of particles entrained in a gaseous jet comprising a conduit terminating in a discharge orifice from said guide for directing said stream of resin particles against said area, a gas supply connected to deliver a stream of gas through said conduit and out through said orifice, a continuous resin particle supply, and an opening in said conduit for passage of resin particles from said supply into said conduit at a location to be entrained and carried through said conduit and out through said orifice by said gas stream, means activated by said control means to shut off said gas supply to interrupt said stream of resin particles when said guide is not in position to direct said stream against a threaded area of said article and to restore said gas supply to resume discharge of said stream of resin particles when said guide is disposed to direct said stream against an area of a threaded portion of an article, a port into said conduit intermediate said conduit opening and said orifice and a suction device associated with said port to reduce pressure in said conduit to continuously pull air through said conduit opening and said orifice and to draw off through said port resin particles left in or deposited in said conduit when said gas supply is shut off.

4,060,869

APPARATUS FOR FORM FITTING SHOES AND BOOTS

Dennis N. Brown, 8528 Custer School Road, Custer, Wash. 98240

Continuation-in-part of Ser. No. 560,740, March 21, 1975. This application June 9, 1976, Ser. No. 694,366

Int. Cl.² A43D *5/00*

U.S. Cl. 12—115.2 **5 Claims**

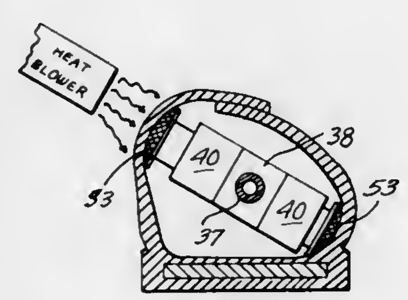

1. An apparatus for internally expanding foot gear comprising a fluid pressure cylinder, at least one fluid pressure actuated piston mounted in said cylinder for reciprocation therein, a domed member detachably mounted on said piston for engagement with the inner surface of the foot gear to apply pressure thereto, a second dome member and means on said cylinder for supporting said second dome member for engagement with said foot gear oppositely of said first named dome member.

4,060,870

TOOTHPASTE ADMINISTERING AUTOMATIC TOOTHBRUSH

Anthony Cannarella, 221 Dorothy Drive, N. Haledon, N.J. 07508

Filed Dec. 23, 1975, Ser. No. 643,783

Int. Cl.² A46B *13/04*

U.S. Cl. 15—24 **9 Claims**

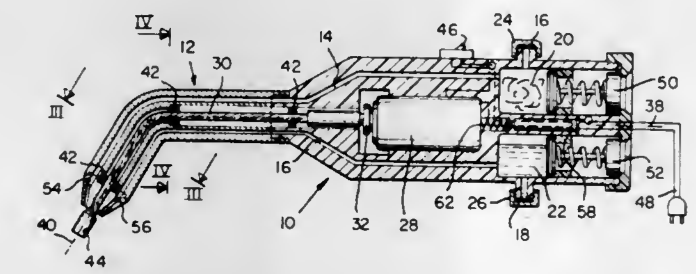

1. A dental appliance comprising:

a housing including a curved tubular extension, said housing having opposite ends and formed with first and second elongated recesses;

first and second pump means secured to said housing for pumping a paste and fluid directly through said first and second recesses, respectively, for the fluid to emerge from said second recess near said other of said ends;

electric rotary drive means disposed in said housing between said opposite ends and having a first longitudinal axis;

a flexible drive shaft having a second longitudinal axis and first and second ends rotatably disposed within said curved tubular extension, said first end of said drive shaft being operatively connected to said drive means and said second end of said shaft extending through the other of said housing ends, said housing being divided into first and second portions separable along a plane substantially intersecting said longitudinal axes;

bearing means for rotatably supporting said flexible shaft extending therethrough and for securing the first and second portions of said tubular extension together;

a toothbrush drivably attached to said second end of said flexible shaft to rotate therewith;

valve means to close off said first and second elongated recesses, respectively, near said other of said ends of said housing; and

switch means attached to said housing and connected to said electric rotary drive means and to a power supply for switching said electric rotary drive means on and off, whereby upon actuation of said pump means the paste and the fluid are applied to an oral cavity containing teeth and the teeth therein are cleanable by said toothbrush upon actuation of said switch means, and direct application of the toothpaste and the fluid.

4,060,871

WATER-POWERED DISH SCRUBBER

John B. Bryerton, Lock Haven, Pa., assignor to Raymond Lee Organization Inc., a part interest

Filed Sept. 10, 1976, Ser. No. 722,278

Int. Cl.² A46B *13/06*

U.S. Cl. 15—29 **3 Claims**

1. A water powered scrubber for use in dishwashing operations and connectable to a source of water under pressure, said scrubber comprising:

a hollow housing having drain holes in the bottom thereof;

a hollow flexible hose attached at one end to the housing and detachably secured at the other end to said source;

trigger operated valve means located in the housing and connected in series with the hose, said means including a nozzle, said means when the trigger is pulled allowing water to flow through the hose into the nozzle, said water being expelled from the nozzle as a jet, said means when the trigger is not pulled blocking the flow of water;

a first vertical shaft having an upper end in the housing and a lower end projecting downwardly out of the housing; said lower end being cubically shaped;

a brush like attachment disposed outside of the housing

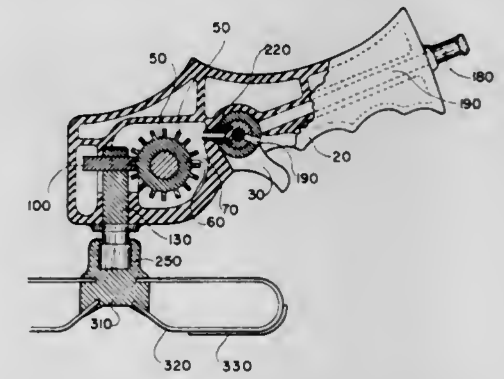

below the first shaft, said attachment having two opposed flexible lips detachably engaging the cubically shaped lower end of the first shaft;

a horizontal gear in the housing secured to the upper end of the first shaft;

a vertical paddle wheel in the housing disposed in the path of the jet, said jet impinging upon the wheel to cause same to rotate about its center in a vertical plane, the water thereafter draining downward through said holes;

a second horizontal shaft in the housing disposed at right angles to the wheel, said wheel being secured at its center to one end of the second shaft; and

a horizontal worm at the other end of the second shaft and engaging said gear whereby rotation of the wheel causes rotation of the second shaft, worm, gear, first shaft and attachment.

4,060,872

WINDSHIELD WIPER AND WASHER

Hans H. Bucklitzsch, Rte. 2, Bloomington, Ill. 61701

Filed Feb. 5, 1976, Ser. No. 655,521

Int. Cl.² B60S *1/46*

U.S. Cl. 15—250.04 **2 Claims**

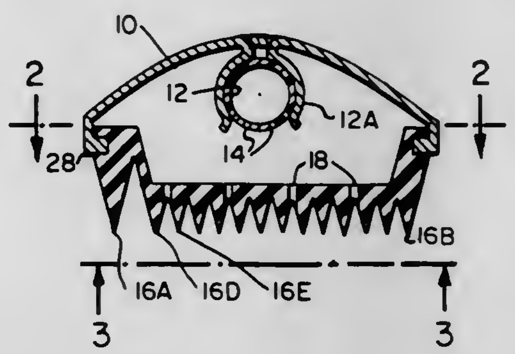

1. A windshield wiper and washer device comprising, in combination:

a rigid longitudinally elongated back member having a generally U-shaped transverse cross-section defining a leading edge, a trailing edge, and opposed opposite end wall members;

a flexible longitudinally elongated wiper blade having a

substantially flat top surface, a sloping front surface, a sloping back surface, and a pair of opposed end surfaces;

the wiper blade removably affixed to the back member between the leading and trailing edges thereof and extending completely between the opposite end wall members thereof so as to define therewith a confined passageway between the back member and the top surface of the wiper blade;

a plurality of spaced apart channels each extending completely through the wiper blade from the top surface thereof to the outer front surface thereof;

said channels each having a front discharge opening formed along the blade front surface at each channel outer end;

a hollow solvent feed tube disposed in the confined passageway along the back member and extending longitudinally therealong centrally thereof and terminating adjacent and inwardly from the back member opposite end wall members;

a series of spaced apart openings disposed in the feed tube in the direction of the blade member top surface for dispensing solvent from the tube to the channels in the blade member;

a plurality of bracket members secured to the back member extending outwardly therefrom into the passageway, the bracket members being disposed along the axis of the back member in alignment with each other, the bracket members securing the feed tube to the back member;

a generally T-shaped connector means disposed substantially centrally of the hollow feed tube and in fluid communication therewith, the arms of the T being connected to the feed tube with the body of the T projecting outwardly of the back member in a direction opposite from the position of the blade member;

a flexible hinge defining element of a hollow tubular construction having one end affixed to the projecting portion of the T-shaped connector means for delivering solvent thereto;

a hollow tubular shaped linkage arm member having one end affixed to the free end of the flexible hinge element for the purpose of moving the back member and wiper blade back and forth across a windshield, the linkage being hollow and in fluid communication with the flexible hinge to pass solvent under pressure therethrough;

a plurality of spray heads associated with some of the openings of the feed tube;

the wiper blade comprising two end blades and a plurality of smaller blade elements disposed therebetween and extending longitudinally parallel thereto; and

whereby solvent can be supplied through the linkage arm member, through the hinge member, through the connector, through the feed tube, through the channels, and out of the channels front discharge openings onto the windshield to form an even coating of dispensed solvent in the path of the wiper blade for cleaning the windshield.

4,060,873
APPARATUS FOR REMOVING LIQUIDS FROM MOVING STRIPS OF PHOTOGRAPHIC MATERIAL OR THE LIKE

Jürgen Leuchter, Tutzing, Germany, assignor to AGFA-Gevaert Aktiengesellschaft, Leverkusen, Germany
Filed June 15, 1976, Ser. No. 696,200
Claims priority, application Germany, June 20, 1975, 2527560; Oct. 10, 1975, 2545487
Int. Cl.[2] G03D *5/00*
U.S. Cl. 15—256.5 **21 Claims**

1. In a machine wherein elongated strips are moved seriatim lengthwise through a succession of liquid baths and wherein at least some of the strips exhibit the tendency to move sideways, particularly in a developing machine for strips of photographic material, a combination comprising a liquid-containing receptacle; devices for guiding a moving strip along a predetermined path extending through and beyond said receptacle so that the moving strip contacts the liquid in said receptacle and successive increments thereof entrain some of the liquid on leaving the contents of said receptacle; and apparatus for removing at least some entrained liquid from such increments; including wiper means having two liquid intercepting members each in contact with a different side of each increment which emerges from the liquid in said receptacle, and support means for said

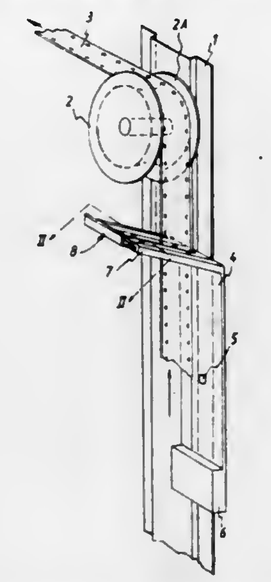

wiper means, at least one of said means being movable in a plane transversely of said path so as to enable said intercepting members to remain in continuous and substantially unchanged liquid-intercepting contact with the respective sides of the moving strip irrespective of eventual sidewise movement of said increments in the region of said wiper means.

4,060,874
APPARATUS FOR REMOVING DUST HAVING DEVICE FOR PRODUCING AIR CURTAIN

Yasuzi Furutsutsumi, 1-19, 2-chome, Midoridai, Kawanishi, Hyougo, Japan
Filed Feb. 17, 1976, Ser. No. 658,668
Claims priority, application Japan, Feb. 21, 1975, 50-24987[U]; Apr. 15, 1975, 50-50759[U]
Int. Cl.[2] A47L *5/14*
U.S. Cl. 15—405 **5 Claims**

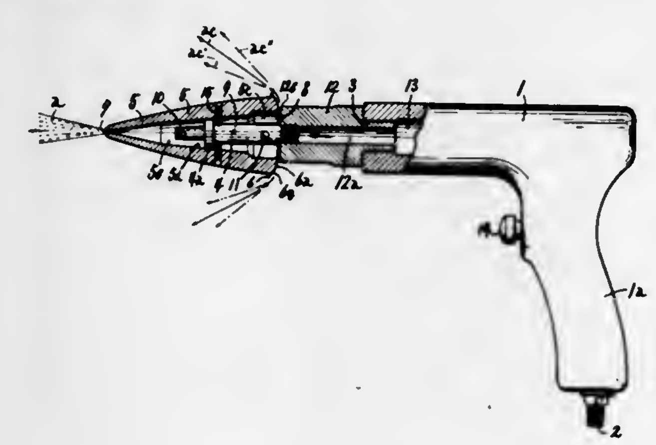

1. An apparatus for pneumatically removing dust, comprising:

a hollow cylindrical main body and integral handle portion having an inlet for receiving high pressure air from a source of high pressure air, the main body having an outlet for the high pressure air at the front end thereof;

a hollow nozzle element secured to the outlet of the main body for receiving high pressure air therefrom and having

a hollow conical nozzle cap fitted around the nozzle element and secured thereto, the nozzle cap having an air discharge opening in its front end in communication with said front orifice in said nozzle element and having an annular surface at the rear end thereof having an inner portion which is perpendicualr to the longitudinal axis of said nozzle cap, and at least two contiguous frusto-conical

outer portions angling at successively greater angles toward the front of said nozzle cap, the front end of said main body having a surface thereupon parallel to said perpendicular portion of said annular surface to define a small clearance therebetween and extending radially outwardly of said longitudinal axis a distance which is between the inner and outer radial dimensions of the innermost frusto-conical portions of said annular surface, the inner end of said clearance being in communication with said rear orifice,

whereby high pressure air is forced out of said air discharge opening in said nozzle cap to form a jet of high pressure air and when the high pressure air is simultaneously forced out through said clearance it forms a conical air curtain spreading forwardly from the forward edge of the outermost frusto-conical portion.

4,060,875
APPARATUS FOR CUTTING STUFFED SAUSAGE CASING

Lincoln John Gosling, Peterborough, and Graham Fraser, Lindsay, both of Canada, assignors to Union Carbide Canada Limited, Toronto, Canada
Filed July 8, 1976, Ser. No. 703,495
Int. Cl.[2] A22C *11/00*
U.S. Cl. 17—1 F **4 Claims**

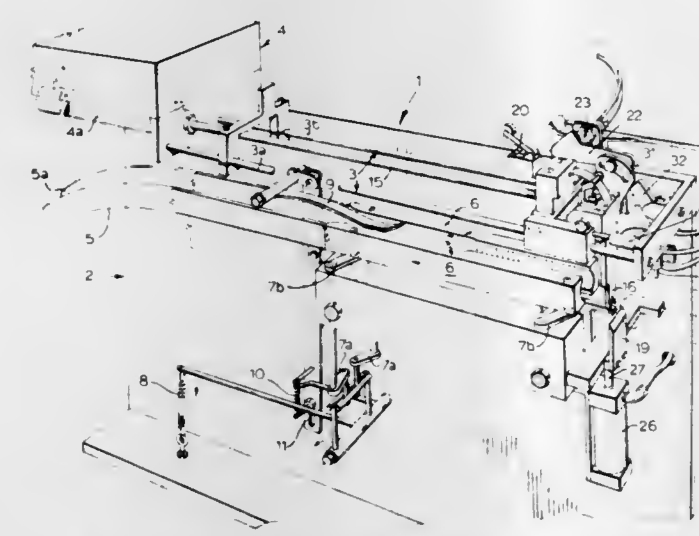

1. An apparatus for cutting linked stuffed sausage casing into individual lengths in the area of a linkage, which apparatus comprises:

a. a passage for guiding a chilled casing to a cutting zone in said apparatus, said chilled casing being stuffed with sausage meat and linked at predetermined points along its length to define individual sausage lengths therebetween;

b. a rail guide positioned above said passage and lateral herewith;

c. a carriage assembly mounted on said rail guide and slidably moveable thereon along the direction of said passage, said carriage assembly including a forked blade tangentially pivoted thereon with respect to said passage;

d. means for advancing said carriage assembly along said rail guide towards said cutting zone, said forked blade being positioned in the path of said chilled casing when said blade is pivoted in the fully downward position whereby said forked blade may be wedged over a linkage on said chilled casing and pull said casing towards said cutting zone when said carriage assembly advances towards said cutting zone;

e. means for withdrawing said carriage assembly from said cutting zone, said forked blade being pivoted forward and upward out of the way of said casing when said carriage assembly is so withdrawn;

f. a cutting blade in said cutting zone and means for raising said cutting blade to cooperate with said forked blade when said carriage assembly is in said cutting zone to thereby cut said chilled casingin the area of said linkage.

4,060,876
WALLET SUPPORTING CLIP

Diogenes De Soto, 2831 Florida Ave., Miami, Fla. 33133
Filed July 14, 1976, Ser. No. 704,995
Int. Cl.[2] A44B *21/00*
U.S. Cl. 24—3 J **2 Claims**

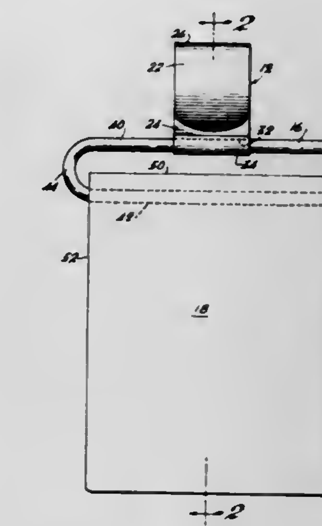

1. A foldable wallet suspending device for supporting a wallet between a pair of trousers and a wearer comprising a clip having an inner leg and an outer leg on opposite sides of a hairpin turn, the inner opposed surfaces of said inner and outer legs defining belt-engaging means with the outer or opposite side of said inner leg defining a body-engaging surface, each of said legs having a terminal end zone, and an elongated link fixed on the upper portion thereof to the terminal zone of said inner leg with the lower portion thereof defining a foldable wallet-receiving support bar.

4,060,877
FASTENER FOR CONVEYOR BELTS OR BANDS

Jean-François Schick, Paris, France, assignor to Societe Goro, Chelles, France
Filed Feb. 23, 1977, Ser. No. 771,254
Claims priority, application France, Feb. 27, 1976, 76.05482
Int. Cl.[2] F16G *3/02*
U.S. Cl. 24—33 B **4 Claims**

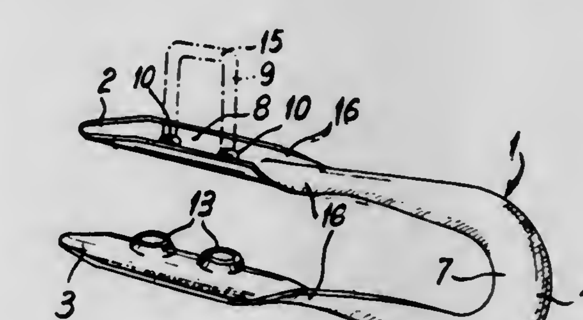

1. A belt-fastener of the type consisting of a metallic element bent in a U-shaped elbow and comprising two superposed arms forming clamping tongues for fastening said element on said belt and an elbowed portion constituting a hinge-knuckle adapted to receive a hinge-pin, wherein said belt-fastener is manufactured from sheet metal strip of substantially constant width and the elbowed portion is folded in two in the transverse direction, the two sides of the fold thus formed being applied against each other in a plane located substantially at right angles to the general plane of the two clamping tongues and thus ensuring a substantial increase in the mechanical strength of the hinge-knuckle while freeing the space required for the engagement of the hinge-knuckles of the fasteners which are placed on the other end of the belt or band, the two sides thus folded-back being progressively joined to each edge of said clamping tongues.

4,060,878
BUCKLE SWITCH
Joseph J. Dyki, Romeo, Mich., assignor to The Firestone Tire & Rubber Company, Akron, Ohio
Filed Oct. 20, 1975, Ser. No. 623,665
Int. Cl.² H01H *3/16;* **A44B** *11/25*
U.S. Cl. 24—230 A **2 Claims**

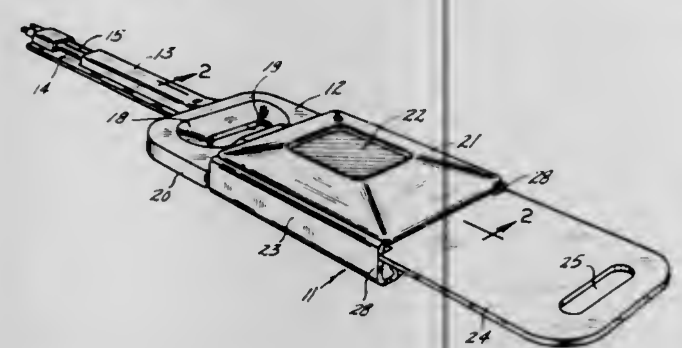

1. A switch for seat buckles of the type including a channel frame and an insertable tongue, latched upon closure, the combination including:
- a resin switch case having a lead entry portion, a lead support portion, lead contactor support portion, and an actuator support portion;
- a pair of electrical leads supported in said entry portion of said encasement and extending through said lead support portion and to said lead contactor support portion;
- a pair of flat spring resilient lead contactors electrically connected to said leads and extending into said actuator support portion of said encasement;
- a non-conducting actuator in said actuator support portion of said encasement and journalled in said encasement, one profile of said actuator extending above said actuator support portion in an interference path with said tongue and another profile of said actuator resiliently supported by said lead contactors; and
- a contactor bar through said actuator eccentric to the pivot axis of said actuator and movable with said actuator in a path selectively intersecting and wiping said lead contactors with said bar.

4,060,879
SEAT BELT BUCKLE
Juichiro Takada, Tokyo, Japan, assignor to Takata Kojyo Co., Ltd, Tokyo, Japan
Filed Aug. 16, 1976, Ser. No. 714,544
Claims priority, application Japan, Aug. 19, 1975, 50-99817
Int. Cl.² A44B *11/26*
U.S. Cl. 24—230 A **9 Claims**

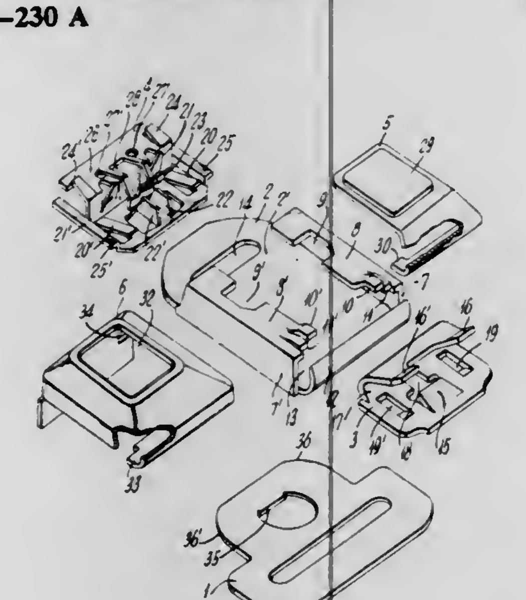

1. A coupling device comprising a buckle including a hollow body member having a front opening and including longitudinally extending side walls provided with upper inwardly directed fulcrum sections, a coupling tongue longitudinally slidable through said front opening and having a first latching shoulder, a latching member housed in said body member and including upper and lower arm portions diverging forwardly from a knee portion engaging said fulcrum sections whereby said latch member is swingable between raised lock and depressed unlock positions, said latching member lower portion having a second shoulder movable with the swinging of said latch member between a lock position with said second shoulder engaging said first shoulder of the inserted tongue to releasably prevent the withdrawal thereof and an unlock position with said first and second shoulders out of registry and a unitary spring member disposed in said body member and including first spring elements resiliently urging said latching member to swing toward a predetermined lock position and a secnd spring element normally bearing on said tongue member when in fully inserted position to resiliently urge said tongue member toward a retracted position relative to said body member.

4,060,880
CIRCULAR SAW HAVING AN IMPROVED TOOTH GEOMETRY AND METHOD OF MAKING THE SAME
Robert H. Nowak, Mentor, Ohio, assignor to The Motch and Merryweather Machinery Company, Cleveland, Ohio
Continuation-in-part of Ser. No. 587,504, June 16, 1975, Pat. No. 4,012,820. This application June 17, 1976, Ser. No. 697,288
Int. Cl.² B26D *1/12*
U.S. Cl. 407—61 **6 Claims**

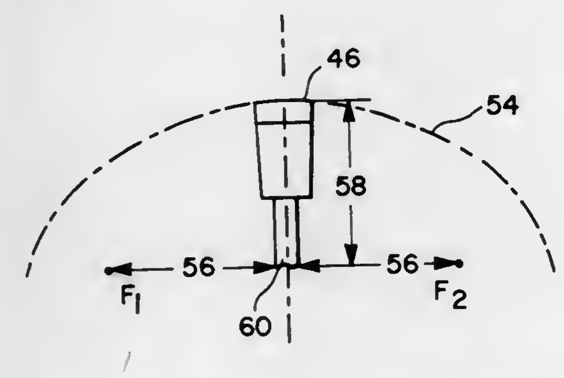

1. A circular saw having teeth with an improved metal cutting geometry comprising:
- a circular saw blade body; and,
- a plurality of saw teeth means attached to said saw blade body and separated one from another by gullet means, said saw teeth means including a plurality of higher and lower teeth arranged in a triple-chip like manner, said teeth means including at least a leading face and a first and a second side face, said saw teeth means further including a continuously curved cutting surface located on the upper portion of said leading face of said saw teeth means, said continuously curved cutting surface having two edge portions where said continuously curved cutting surface meets said first and second side faces and a central portion intermediate said two edge portions and advanced forward of said two edge portions, said cutting surface having a substantially eliptical cross-section.

4,060,881
CUTTER HEAD ASSEMBLY FOR GEAR CUTTING MACHINES
Arthur B. Ryan, Canandaigua, and Charles B. Thomas, Rochester, both of N.Y., assignors to The Gleason Works, Rochester, N.Y.
Filed Nov. 15, 1976, Ser. No. 741,837
Int. Cl.² B26D *1/12*
U.S. Cl. 407—22 **7 Claims**

1. In a cutter head assembly of a type which can carry of plurality of cutting blades projecting from a front face thereof for engaging and cutting a workpiece to form gear tooth slots in the workpiece, said cutting head assembly including (a) a main body member having blade-receiving slots formed radially into the outer circumference thereof and at an inclination

to its center axis of rotation, and (b) a ring member for enclosing said circumference of the main body member and for securing said cutting blades therein, an improvement in said cutter head assembly for making it more universal in its acceptance of different types of cutting blades having cutting face portions which do not require resharpening, said improvement comprising a relationship of each blade-receiving slot to a plane of rotation (10) located at a front face of the cutter head, a reference plane (16) which is perpendicular to the plane of rotation (10) and positioned to pass through a center axis of rotation of the cutter head, and another reference plane (18) which is positioned at right angles to both of the planes (10) and (16) such that
- each blade-receiving slot has a front edge (22) which is positioned on or adjacent to a radius taken from the center axis of said main body member in said plane of rotation (10), so that a single blade carried within each slot can be

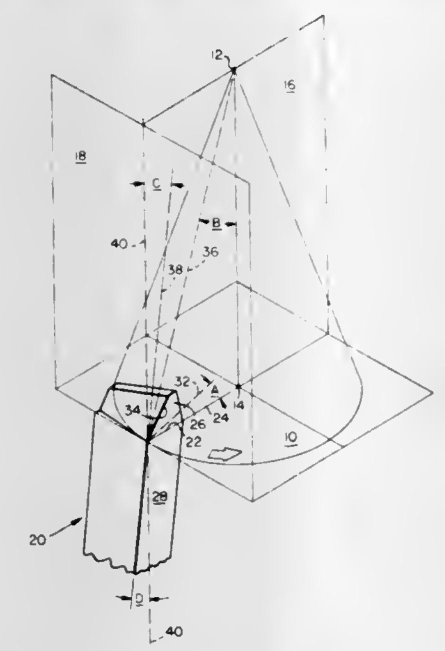

radially adjusted relative to the center axis of the assembly, and
- each blade-receiving slot is inclined to said reference plane (16) at an included angle D which is related to a range of pressure angles and possible side rake angles of cutting blades which can be mounted in said slot, so as to avoid a negative hook angle position for any blade carried within a given slot, wherein said angle *D* is determined by a projection of a cutting edge (34) of such a cutting blade onto said reference plane (16), and said hook angle is determined by a projection of the cutting edge (34) onto the reference plane (18), and including
- a plurality of cutting blades for use in the cutter head assembly, each of the cutting blades having a cutting face portion which is an extension of a shank portion thereof and which does not require resharpening when the cutting blade is resharpened.

4,060,882
CYLINDERS AND ROLLERS FOR PRINTING MACHINES
Frantisek Pospisil, Brno, and Vaclav Sedlak, Jedovnice, both of Czechoslovakia, assignors to Adamovske strojirny, narodni podnik, Adamov, Czechoslovakia
Filed Jan. 27, 1976, Ser. No. 652,778
Claims priority, application Czechoslovakia, Jan. 27, 1975, 515/75; Jan. 27, 1975, 512/75; Jan. 27, 1975, 513/75
Int. Cl.² B21B *31/08*
U.S. Cl. 29—132 **3 Claims**

1. A cylinder roller for printing machines, comprising a cylinder body made of a corrodible ferrous metal, and at least one inseparable non-corrodible cylindrical surface layer on the body of said cylinder or roller, said layer consisting in combination of at least two metal oxides selected from the group

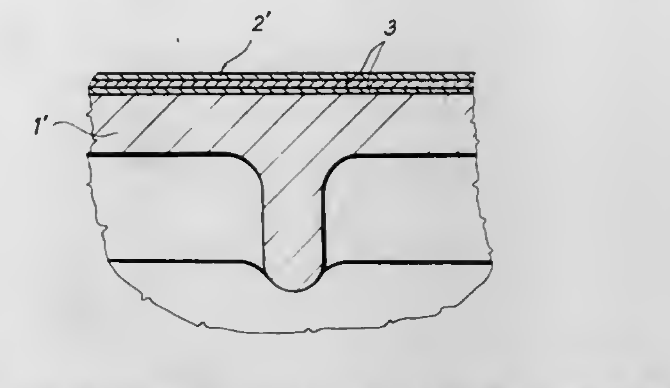

consisting of Al_2O_3, TiO_2, CrO_3, and MgO, said inseparable layer having a thickness of 0.05 to 0.6 mm.

4,060,883
COMPOUND TURBINE ROTOR AND METHOD FOR MANUFACTURING ELEMENTS CONSTITUTING SUCH A ROTOR
André Coulon, and René Perrin, both of Belfort, France, assignors to Societe General de Constructions Electriques et Macaniques Alsthom, Paris Cedex, France
Division of Ser. No. 569,435, April 18, 1975, Pat. No. 3,967,919. This application Apr. 14, 1976, Ser. No. 676,787
Claims priority, application France, May 21, 1974, 74.17627
Int. Cl.² B23P *15/04*
U.S. Cl. 29—156.8 R **2 Claims**

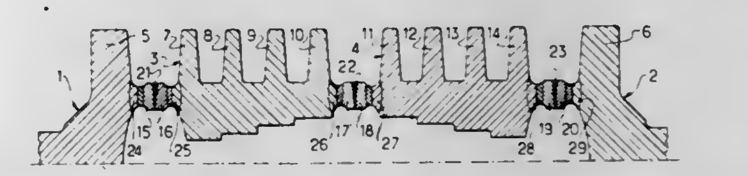

1. A method for manufacturing a turbine rotor comprising the steps of:
- forging blade bearing blocks made of a steel comprising carbon and nickel;
- joining at least one axial protuberance to each block by casting a transition zone between the axial protuberance and the block from a consumable electrode with said protuberance being formed of steel having a carbon content and a nickel content lower than those of said block, and wherein said consumable electrode comprises steel having a carbon content between the carbon content of said block and said protuberance and having a nickel content between the nickel content of said block and said protuberance;
- reforging and heat treating said blocks with their axial protuberances; and
- welding of axial protuberances of respective blocks together to form an axial succession of blocks.

4,060,884
EXTRACTOR FOR REMOVING DAMAGED BARREL LOCK FROM LOCKING RING OF A KILOWATT-HOUR METER
Earle B. Hamilton, 1423 Breton Hill Drive, Hartsville, Pa. 18974
Filed July 9, 1976, Ser. No. 703,941
Int. Cl.² B23P *19/04*
U.S. Cl. 29—256 **1 Claim**

1. An extractor tool for a hardened steel barrel lock having a hollow barrel, ball detents projecting radially outwardly from said barrel, means within said barrel retaining said ball detents in radially outward position, an enlarged annular head at the outward end of said barrel, and a pair of small aligned diametral holes in said heat for receiving a seal-wire, said holes

having a diameter not greater than one-tenth inch, said barrel lock being within a cover housing, said head projecting slightly therefrom to expose said seal-wire holes, said seal-wire holes being closely adjacent said housing, said extractor tool comprising:

a. a first extractor member having an elongated externally threaded shank and an enlarged annular head having a recess the diameter of which corresponds to the outer diameter of the annular head of the barrel lock which is to be extracted and adapted to receive said barrel lock head in its recess, said head of said first extractor member being provided with a pair of holes in diametral alignment with each other;

b. an integral connector pin of hardened steel having a length corresponding to the outer diameter of the enlarged head of said first extractor member and of sufficiently small diameter to be received in the small aligned holes in the head of said barrel lock, said pin inserted into the pair of aligned holes in the head of said first extractor member and into the small aligned holes in the head of said barrel lock when said head of said barrel lock is received

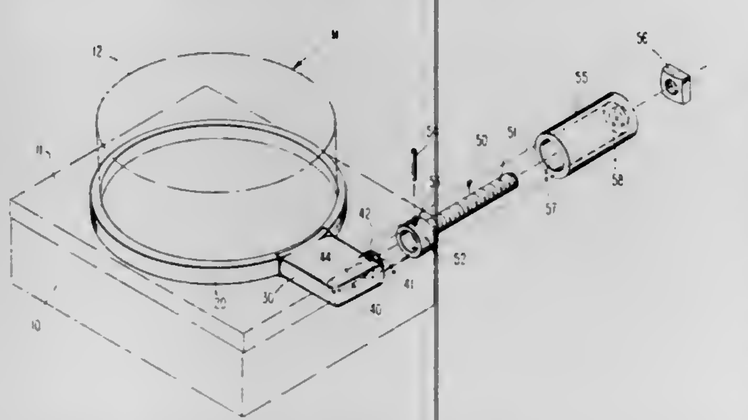

within the recess in the head of said first extractor member, whereby said pin connects said first extractor member to said barrel lock head;

c. a hollow cylindrical extractor sleeve having a cylindrical bore the diameter of which corresponds to the outside diameter of the annular head of said first extractor member and adapted to receive said head, said sleeve having at its outward end an axial opening through which the outward end of the threaded shank of the first extractor member is adapted to project when said sleeve is placed over the head of said first extractor member and receives said head in its recess;

d. a nut adapted to be received on the projecting portion of said threaded shank, whereby tightening of said nut on said shank against said sleeve when the forward end of said sleeve is in abutment against the housing of said barrel lock is effective to exert a pulling force on said shank thereby to exert on said barrel lock on both sides of the center axis thereof outward pulling forces which are parallel to the center axis of said barrel lock and of substantially equal magnitude.

4,060,885

METHOD OF MAKING A NEEDLED SUTURE

John Ronald Hoffman, New Milford, and Peter John Marsland, Monroe, both of Conn., assignors to American Cyanamid Company, Stamford, Conn.

Division of Ser. No. 691,102, May 28, 1976. This application Dec. 16, 1976, Ser. No. 751,769

Int. Cl.[2] B21D *39/00*; B23P *11/00*

U.S. Cl. 29—407 **2 Claims**

1. A method of making a needled-suture comprising a surgical needle having a pointed end and a blunt end, having a coaxial cylindrical blind hole in the blunt end; a suture fitted into said blind hole; and a crimp in said blunt end, retaining the suture in said hole, said crimp being spaced from the blunt end of the needle sufficiently far that the suture emerges from an essentially undistorted portion of the blind hole, said crimp leaving the front end of the blind hole essentially undistorted, so that at least about 0.010 inches of the front end of the suture is essentially undistorted; and crimp being elliptical and bringing the minor diameter of the ellipse formed in the blind hole in contact with the suture in compressing frictional relationship so that the pull-out value for the average pull-out plus 2 sigma deviation is less than (1) about 3 pounds for size 1 and 0, about 2.5 pounds for sizes 2/0 and 3/0 and about 1.5 pounds for size 4.0 and smaller or (2) half the tensile strength of the suture, whichever is smaller; and the pull-out has a minimum of at least 0.4 pounds for size 3/0 and larger, 0.25 pounds for size 4/0, and 0.1 the tensile strength of the suture for sizes 5/0 and smaller

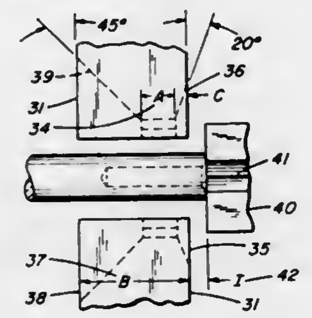

whichever is larger, comprising: placing a drilled end needle between symmetrical swaging dies having a swaging radius slightly less than the radius of the needle, and an enlargement of the radius adjacent the closing faces of the dies, and which dies have an entrance cone to aid in placing the needle, and which open to just slightly larger than the needle, holding the needle in threading position against a threading block, which has a threading slot to align a suture end with the blind hole in the needle, inserting a suture end in the threading slot and into the aligned blind hole in the needle, and crimping the needle onto the suture at a distance spaced from the blunt end thereof between the swaging dies.

4,060,886

METHOD AND APPARATUS FOR MANUFACTURE OF SLIDE FASTENER STRINGER

George B. Moertel, Crawford, Pa., assignor to Textron Inc., Providence, R.I.

Division of Ser. No. 539,643, Jan. 9, 1975, Pat. No. 3,975,801. This application June 14, 1976, Ser. No. 696,098

Int. Cl.[2] B29D *5/00*

U.S. Cl. 29—410 **9 Claims**

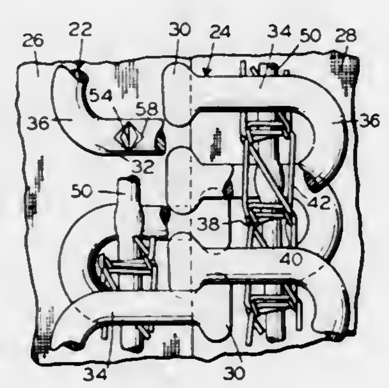

1. A method of forming a stringer for a slide fastener comprising the steps of

forming a continuous filament into a coupling element having successive sections each including a head portion, a pair of leg portions extending from opposite sides of the head portion, and a connecting portion interconnecting to a leg portion of an adjoining section;

deforming an inside surface of one leg portion of each section to form an interlocking means;

engaging an elongated member with the one leg portion at the interlocking means of each section;

biasing the elongated member against the one leg portion of each section such that the elongated member is inter-

locked with the interlocking means of each one leg portion to prevent longitudinal and transverse movement of the elongated member relative to the one leg portion; and

securing each section of the coupling element to a tape;

said deforming step forming a sharp edge on the one leg portion to grip the elongated member.

4,060,887

MULTIPLE CONDUCTOR CONNECTOR AND METHOD OF CONNECTING CONDUCTORS TO TERMINALS THEREWITH

Pierre De Groef, Brussels, Belgium, assignor to N. V. Raychem S.A., Belgium

Filed May 27, 1975, Ser. No. 580,940

Int. Cl.[2] H05K *3/34, 1/04;* H01R *17/18, 43/02*

U.S. Cl. 29—626 **31 Claims**

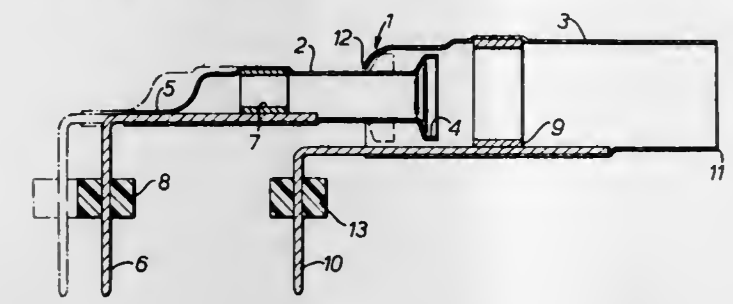

1. An electrical connector comprising a first hollow member having first and second ends at least the first of which is open, said first hollow member having associated therewith a first electrically conductive member, at least part of which first electrically conductive member extends beyond the second end of the first hollow member, said first hollow member being adapted to receive a first electrical conductor and providing means for electrically connecting said first conductor to said first conductive member, a second hollow member having associated therewith a second electrically conductive member, at least part which second electrically conductive member extends beyond one of the ends of the second hollow member, said second hollow member being adapted to receive a second electrical conductor and providing means for electrically connecting said second conductor to said second conductive member, the first end of the first hollow member being slidably and adjustably retained in the second hollow member, and the two electrically conductive members being electrically insulated from each other.

26. A method for electrically connecting each of first and second electrical conductors to a different terminal in an electrical component having at least two spaced terminals comprising:

a. inserting said first conductor into the first end of a first hollow member having first and second ends at least the first of which is open, said first hollow member having associated therewith a first electrically conductive member, at least part of which first electrically conductive member extends beyond the second end of the first hollow member, said first hollow member providing means for electrically connecting said first conductor to said first conductive member;

b. inserting said second conductor into the first end of a second hollow member having associated therewith a second electrically conductive member, at least part of which second electrically conductive member extends beyond one of the ends of the second hollow member, said second hollow member providing means for electrically connecting said second conductor to said second conductive member, said second hollow member having the first end of the first hollow member slidably retained therein;

c. slidably adjusting the first and second hollow members to position said first and second conductive members for connection to separate spaced terminals;

d. electrically connecting said first conductor to said first conductive member and said second conductor to said second conductive member; and

e. electrically connecting said first and second conductive members to respective spaced terminals.

4,060,888

METHOD OF IMPROVING OHMIC CONTACT THROUGH HIGH-RESISTANCE OXIDE FILM

Virgil E. Bottom, Abilene, Tex., and Robert E. Christian, Shawnee, Kans., assignors to Tyco Filters Division, Inc., Phoenix, Ariz.

Filed June 29, 1976, Ser. No. 700,756

Int. Cl.[2] H01R *43/00*

U.S. Cl. 29—628 **5 Claims**

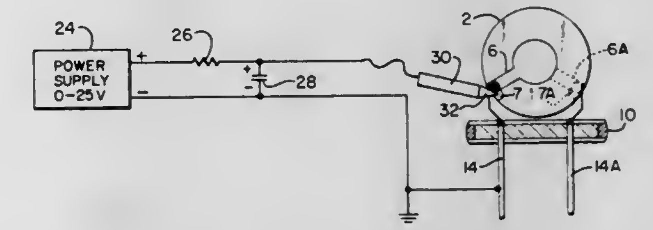

1. A method of making improved ohmic contact between at least one aluminum contact of a quartz crystal resonator and an electrically-conductive material comprising the steps of:

forming an aluminum oxide coating on said aluminum contact;

coupling a wire lead to said contact with said electrically-conductive material; and

discharging a current pulse of a predetermined magnitude and duration through said electrically-conductive material and said aluminum oxide coating so as to form a low electrical resistance ohmic path between said aluminum contact and said electrically-conductive material.

4,060,889

METHOD OF FORMING FLEXIBLE ELECTRICAL CIRCUIT CONNECTIONS

Eugene J. Zielinski, Toledo, Ohio, assignor to Owens-Illinois, Inc., Toledo, Ohio

Division of Ser. No. 669,950, March 24, 1976, Pat. No. 4,019,798. This application Nov. 12, 1976, Ser. No. 741,180

Int. Cl.[2] H01R *43/00*

U.S. Cl. 29—628 **3 Claims**

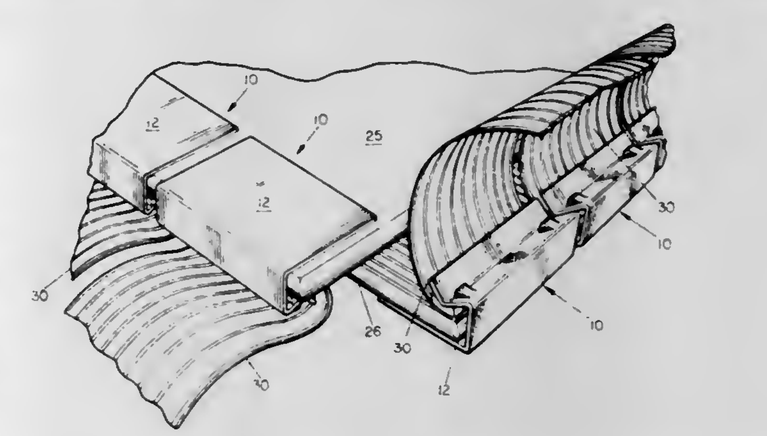

1. A method for attaching and holding flexible circuit members having multiple conductors terminating in pads to conductive mounting pad terminals of an electrical component which comprises the steps of:

aligning the mounting pad terminals of said electrical component with said flexible circuit pads;

adhesively adhering said mounting pad terminals to said flexible circuit pads;

attaching force distribution members to the upper surface of said adhered flexible circuit;

opening clip members which are dimensioned to fit over said

flexible circuits, force distribution means and electrical component when opened;
inserting said open clip members over said force distribution members and over said mounting pad terminals with substantially zero force applied to said flexible circuits and said force distribution members;
closing said clip members; and
mechanically holding said flexible circuits in position with the force applied by said closed clip member to said flexible circuits and said electrical component.

4,060,890
METHOD OF MANUFACTURING AN ELECTRICAL HARNESS
Helen Dechelette, St. Cloud, and Jean Claud Joly, Osny, both of France, assignors to AMP Incorporated, Harrisburg, Pa.
Division of Ser. No. 682,924, May 4, 1976, Pat. No. 4,026,629. This application Jan. 4, 1977, Ser. No. 756,656
Claims priority, application France, May 12, 1975, 75.14747
Int. Cl.² H01R *43/00*
U.S. Cl. 29—628 **7 Claims**

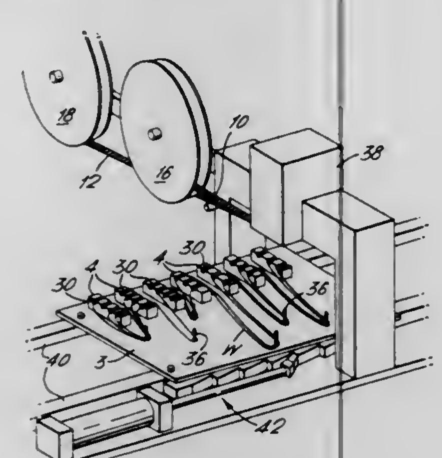

1. A method of manufacturing an electrical harness comprising wires connected to electrical terminals of a plurality of electrical connectors, according to a desired wiring pattern, each terminal comprising a wire connecting portion formed integrally with a contact portion for mating with a complementary electrical terminal member, in which method, the wires are laid out on a wiring layout board, with the aid of wire guiding means, to form the desired wiring pattern and are subsequently connected electrically, to the terminals of the connectors, the wire being first laid in notches in the housings of the connectors, which housings are disposed on the board, after which the terminals are inserted into through openings in the housings through first ends of the openings, electrically to connect the wires to the wire connecting portions of the terminals and are secured in the openings with the contact portions of the terminals positioned to receive mating terminal members inserted through second ends of the openings in the housings.

4,060,891
WIRE STRIPPER
Henry C. Lerner, 1220 Sunset Plaza Drive, Los Angeles, Calif. 90069
Filed June 21, 1976, Ser. No. 697,972
Int. Cl.² B26B *27/00;* **H02G** *1/12*
U.S. Cl. 30—90.1 **11 Claims**

1. A wire stripper device comprising:
a support member have a flat back surface,
a die mounted on the upper end of said support member, said die having a guide hole therethrough with a square corner on the rear upper edge thereof lying in the plane of the back surface of the support member,
an elongated flat flexible blade having a notched cutting edge on the upper end thereof, and
clamping means for clamping the lower end of the blade to the back surface of said support member with the upper cutting edge of the blade lying in the plane of said flat back surface and spaced from the upper edge of the guide hole to provide an opening which is of a size to pass the

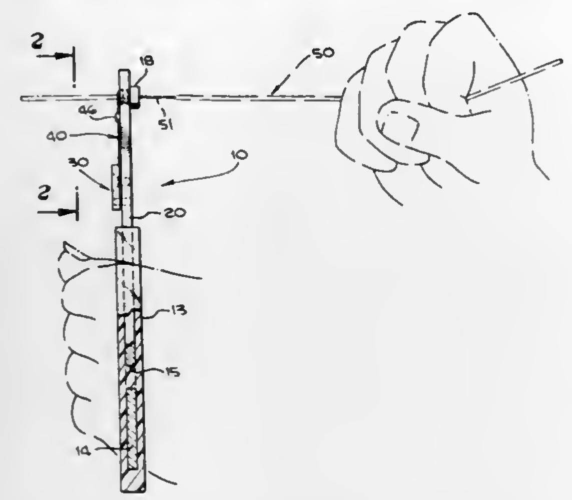

bare wire but not the insulation coating of a conductor to be stripped.

4,060,892
CUTTER FOR SEMICYLINDRICALLY CURLED PAPER
Takajiro Kondo, Yasugi; Toshitaka Asamoto, Matsue, and Tsutomu Oki, Yasugi, all of Japan, assignors to Hitachi Metals, Ltd., Japan
Filed Feb. 3, 1975, Ser. No. 546,691
Claims priority, application Japan, Nov. 1, 1974, 49-125522
Int. Cl.² B26B *13/00*
U.S. Cl. 30—253 **1 Claim**

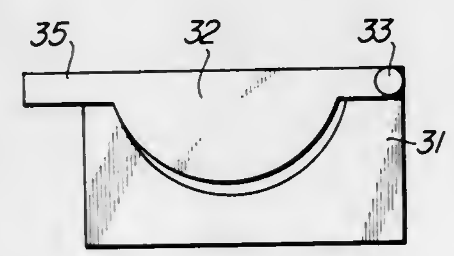

1. A cutter adapted for cutting paper or the like in a semicylindrically curled state, comprising a stationary blade having a cutting edge of semicircular concave contour, a movable blade having a cutting edge with a semicircular convex periphery, a spring-loaded pin means pivotally connecting the stationary and movable blades at one end for forcing both blades in pressure contact with each other, wherein the movable blade has a handle at its other end for a manual cutting operation and the pivotal connection of the blades is outside the locus of points defining the concave and convex surfaces, and the radius of the semicircular periphery of the movable blade is smaller than the radius of the semicircular contour of the stationary blade and the centers of these radii are arranged such that the distance between the centers of the radii is greater than the difference between the blade radii so that the two blades are always in cutting contact at only one cutting point at any instant of time during a cutting operation and at the beginning of a cutting stroke the cutting edges are in single point contact at their ends opposite the pivotal connection.

4,060,893
CUTTER
Haruo Matsuura, Tokyo, Japan, assignor to Kabushiki Kaisha Daisho, Japan
Filed Feb. 13, 1976, Ser. No. 658,064
Int. Cl.² B26B *3/00;* **B26D** *7/02*
U.S. Cl. 30—310 **3 Claims**

1. A sheet cutting device for cutting sheets into a circular form, comprising

a base having a flat upper base surface and having a bracket upstanding from the surface;
a frame pivoted to the bracket for angular pivoting movements between a raised position and a lower position, the frame having a sidewall secured thereto and the sidewall having a pad thereon at a free edge of the sidewall remote from the frame for engaging, in the lower position of the frame, a sheet lying on the base surface to determine the lower position of the frame, to hold the sheet, and to

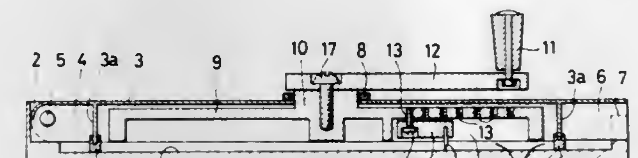

provide a gap between the base surface and the frame, the sidewall and pad being disposed to surround the gap; and
a rotor rotatably mounted on the frame for rotation in the gap, having a handle for effecting the rotation, and having a cutting edge extending to the base surface when the frame, with the rotor and the knife thereon, is in the lower position, for cutting the sheet into a circular form by the rotation of the rotor and knife relative to the sheet held by the pad.

4,060,894
CHAIN SAW SAFETY BAR
Harvie G. Hampton, 1863 S. Brookwood, Shreveport, La. 71108
Filed Dec. 15, 1976, Ser. No. 750,665
Int. Cl.² B27B *17/02*
U.S. Cl. 30—382 **10 Claims**

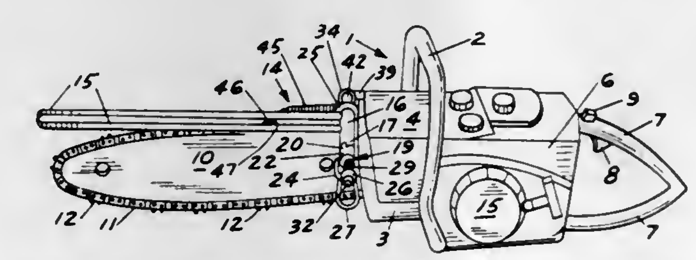

1. A chain saw safety bar for a chain saw comprising:
a. a shaft carried by said chain saw;
b. a bar latch rotatably mounted on said shaft and having a bar latch tip and a bar latch recess on one end thereof;
c. a U shaped safety bar carried by said bar latch and extending above and essentially parallel to the chain and chain bar of said chain saw;
d. bar latch lock means slidably mounted on said shaft and having a bar latch lock tip and a bar latch lock recess cooperating with said bar latch tip and said bar latch recess of said bar latch to freely permit said bar latch and said U shaped safety bar to rotate upwardly with respect to said chain and said chain bar and to releasably permit said bar latch and said U shaped safety bar to rotate downwardly on said shaft;
e. safety bar bias means in said chain saw safety bar to bias said safety bar in essentially parallel relationship with respect to said chain and said chain bar; and
f. retaining means in cooperation with said bar latch to prevent sliding movement of said bar latch on said shaft.

4,060,895
NON-SYMMETRICAL BAR WITH REVERSIBLE BODY PORTION
Arvin A. Hille, Lake Oswego, Oreg., assignor to Omark Industries, Inc., Portland, Oreg.
Filed Nov. 15, 1976, Ser. No. 741,550
Int. Cl.² B27B *17/04*
U.S. Cl. 30—384 **1 Claim**

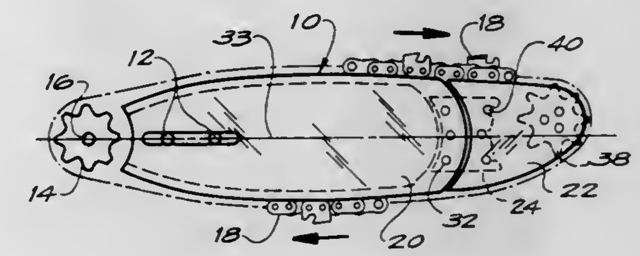

1. A chain saw guide bar comprising: a main body portion and a nose portion, said main body portion including means for attaching said main body portion to a chain saw housing with the rearward end adjacent the drive sprocket of the chain saw for driving a saw chain around the guide bar to be guided along the side edges thereof, and releasable connecting means for connecting the nose portion to the forward end of the main body portion, said main body portion forming the major portion of the guide bar being symmetrical about a center line lengthwise of the main body portion where by the side edges are invertible, said nose portion forming a smaller portion relative to the main body portion and having a curved edge formed around the outer end adapted to connect with the side edges of the main body portion to provide a continuous supporting edge for a saw chain from the rearward end along one of said side edges, around the nose portion and back to said rearward end along the other of said side edges, the portion of said curved edge on the top of the nose portion being sharply curved to reduce kick back and the portion of said curved edge on the bottom of the nose portion being relatively gradually curved, and said connecting means connecting the nose portion to the main body portion whereby the main body portion can be inverted relative to the nose portion.

4,060,896
PROSTHODONTIC IMPLANT AND METHOD
M. Ervin Wahnish, 612 E. Church St., Orlando, Fla. 32801
Filed May 24, 1976, Ser. No. 689,102
Int. Cl.² A61L *13/00*
U.S. Cl. 32—10 A **9 Claims**

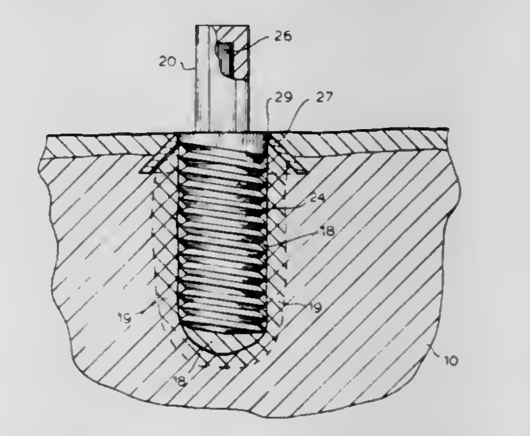

1. A prosthodontic implant for anchoring dental appliances in a jawbone socket, comprising:
a filler of a non-rejectable, hardenable material selected from the group consisting of poly-methyl methacrylate and methyl methacrylate disposed in said jawbone socket;
a member of a non-rejectable material selected from the group consisting of poly-methyl methacrylate and methyl methacrylate extending into said socket and through said filler, said member having undulations along the outer periphery thereof and dimensioned such that a portion of

the outer periphery thereof engages a portion of the periphery of said jawbone socket; and wherein
said filler is interposed between portions of said shaft and the periphery of said jawbone socket and is homogenous with said shaft.

4,060,897
DEVICE FOR FORMING DENTAL RESTORATIONS
Jean Greenstein, 16844 Mooncrest Drive, Encino, Calif. 91436
Filed Apr. 23, 1976, Ser. No. 679,553
Int. Cl.^{2} A61L *3/00*
U.S. Cl. 32—40 R **28 Claims**

1. A tool for forming dental restorations used in the oral cavity of a human being and which dental restorations are formed from a composition comprised of a hardenable material and a liquid and which will harden when the liquid is substantially removed therefrom, said tool comprising an elongate handle section capable of being grasped by the fingers of the user thereof, a first tool section on one portion of said handle section used in the formation of dental restorations from a synthetic restoration material, a second tool section on another portion of said handle section cooperatable with said first tool section and used in the formation of the dental restorations from the synthetic restoration material and which first and second tool sections are used in combination to form the dental restorations, and a serrated surface section associated with said elongate handle section and being located in very close proximity to said first tool section and substantially spaced from said second tool section along the length of said handle section, said serrated section being comprised of a plurality of axially spaced apart radially extending ring elements having rounded outer edges which are separated by rounded recessed grooved portions, each of said ring elements being diametrally reduced in successive relationship to one another over the overall length of serrated surface section such that the largest of said ring elements is spaced furthest from the first tool section and the smallest of the ring sections is located closest to the first tool section, said serrated surface section being effective in creating vibratory action on the composition during molding thereof to form the dental restorations through reciprocative movement to further aid in the retention of the liquid in the hardenable material during the formation of the dental restorations, said serrated surface section being located relative to said first tool section so that the serrated section may be immediately shifted axially toward said dental restorations after action by said first tool section, and said first tool section being axially located with respect to said handle section so that said dental tool may be rotated through approximately a 180° arc to utilize both said first and second tool sections and such that said serrated surface section may be quickly and easily located in proximity to the dental restorations to cause an additional vibratory action thereon.

4,060,898
CLIP-ON DENTAL RESTORATION AND TOOLS FOR REMOVING SAME
William C. Orthwein, P.O. Box 3332, Carbondale, Ill. 62901
Division of Ser. No. 613,196, Sept. 15, 1975, abandoned. This application June 4, 1976, Ser. No. 692,759
Int. Cl.^{2} A61C *13/12*
U.S. Cl. 32—40 R **2 Claims**

1. A tool for applying inward pressure to the longitudinal walls of a removable dental restoration comprising a pair of gripping handles, each of said handles having a jaw formed at one end thereof, the face of each jaw having a rigid central convex portion defined by adjacent channels and each said channel having located therein a resiliently compressible locating finger extending so that when said jaws are closed on said

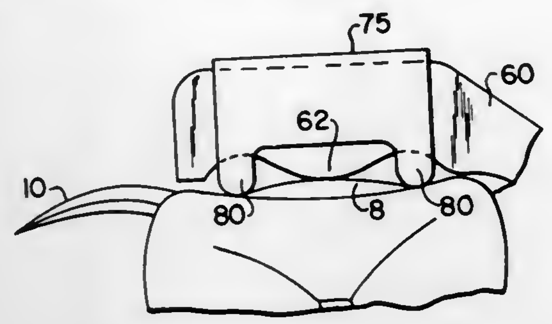

restoration, said fingers will compress until said convex portions contact said longitudinal walls.

4,060,899
DOWEL PIN WITH SOCKET FOR THE MANUFACTURE OF DOWEL MODELS IN DENTAL TECHNOLOGY
Richard Sauter, Richard Stocker St. 15, D7707 Engen, Germany
Filed May 17, 1976, Ser. No. 687,210
Claims priority, application Germany, May 15, 1975, 2521573
Int. Cl.^{2} A61C *13/00*
U.S. Cl. 32—11 **12 Claims**

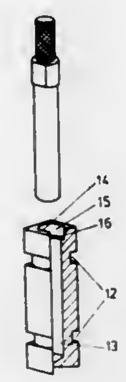

1. A stump-form pin with plug-in casing for manufacturing stump-forms in dental technology comprising:
an elongated cylindrical pin having opposite ends and a longitudinally extending axis, said pin having three portions along said axis, the first portion being a retention portion at one end of said pin having a roughened surface, the second portion being a cylindrical collar portion having a diameter larger than said retention portion and a secant-area segment removed; the third portion being a pin shaft portion forming the other end of said pin, said pin shaft portion having a diameter smaller than that of said collar portion; and
a casing for receiving said pin and adapted to be embedded into a plaster-impression, said casing having a cylindrical bore along a longitudinally extending axis, said bore having two portions and a dead end, the first portion of said bore having said dead end and a diameter approximately the same as the diameter of said pin shaft portion of said pin and the second portion of said bore being approximately the same diameter as the diameter of said collar portion of said pin and having an inward secant-area projection complementing the secant-area segment removed from said collar portion for the purpose of securing the pin against axial rotation when said pin is inserted into said casing, said casing having at least one annular groove in its outer surface coaxially with said axis of said casing.

4,060,900
ANGLE MEASURING DEVICE
Michael Peter Greenwood, Breckenborough Hall, Thirsk, Yorkshire, England
Filed June 3, 1976, Ser. No. 692,422
Claims priority, application United Kingdom, June 26, 1975, 27120/75
Int. Cl.^{2} G01B *5/24*
U.S. Cl. 33—75 R **1 Claim**

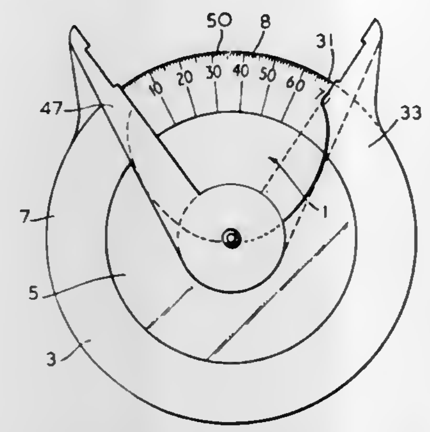

1. A device for measuring or marking out angles comprising two discs, each having curved margins extending for most of the periphery thereof, each disc having a slit extending from its center to its periphery along a path defining with a radius a tongue portion, said discs being superimposed so that the tonque portions face and overlie each other, limiting means fixed to each disc at a location radially beyond the curved margin therein and extending in overlying relationship to the other disc and means passing through said limiting means and said discs to mount said discs for relative rotation about a common axis from a closed position in which all but the tongue of each disc lies on one side of the other disc to a position in which further rotation is prevented by said limiting means, the margin of the surface of a disc which faces the surface of the other disc having a scale thereon so that as the discs are moved from the closed position the scale is progressively revealed.

4,060,901
TEMPLATE FOR LINING SHEET MUSIC PAPER
Donald W. Jamerson, 4120 N. Belmont, Kansas City, Mo. 64117
Filed Aug. 2, 1976, Ser. No. 710,646
Int. Cl.^{2} B43L *13/02*
U.S. Cl. 33—108 **11 Claims**

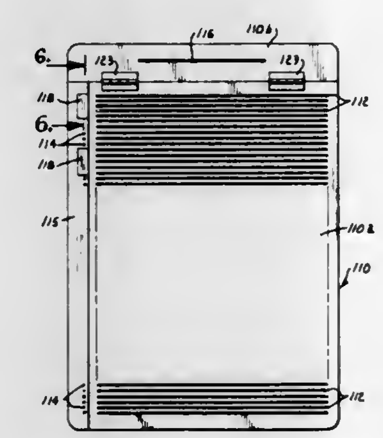

1. A template device for use in marking a plurality of closely spaced lines arranged in a plurality of spaced apart groups each containing a preselected number of lines, said device comprising:
a template presenting a plurality of substantially parallel slots each adapted to receive and guide a marking instrument, said slots being spaced closely and substantially uniformly apart from one another;
a plurality of guides for indicating separate groups of slots, said guides each having a length to substantially span said preselected number of slots; and
means for attaching said guides releasably to said template at locations spaced apart from one another with each guide substantially spanning a group of slots containing said preselected number of slots, whereby the group of slots indicated by each guide may be spaced apart from the groups of slots indicated by the other guides.

4,060,902
MULTI-PURPOSE TOOL
Gerbert O. Keller, 180 Mattakeesett St., Pembroke, Mass. 02356
Filed May 7, 1976, Ser. No. 684,025
Int. Cl.^{2} B43L *7/00*
U.S. Cl. 33—114 **5 Claims**

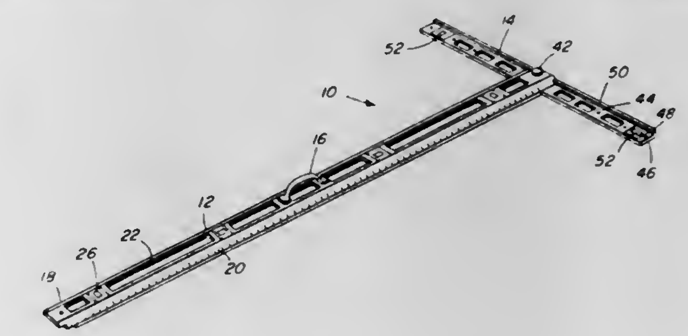

1. A multi-purpose tool, comprising
a. a relatively thick, stiff and straight elongated body formed with parallel bevelled faces adjacent each long edge thereof and one one side thereof,
b. said body being marked with measuring indicia along at least one long edge thereof and on the bevelled face thereof,
c. a handle mounted medially to said one face of said body,
d. said body being formed with a plurality of longitudinally spaced sockets in said one face,
e. a bubble level mounted in each of said sockets,
f. first fastening means detachably securing each of said bubble levels in said socket,
g. at least one end of said body being formed with a pair of transverse grooves defining a stepped transverse notch across the other face of said body,
h. a T-bar of L-shaped cross-section to conform in size and profile with said notch, and,
i. second fastening means detachably connecting said T-bar in said notch perpendicular to the length of said body,
j. said T-bar being formed with a flat, straight portion having a thickness and width corresponding to the depth and width of one portion of said groove and a lip along one edge thereof corresponding in thickness and width to the depth and width of the other of said grooves, whereby the outer face of said T-bar will be flush with the other face of said body when connected thereto and the end of said body will be flush with the outer edge of said T-bar.

4,060,903
COMPENSATION OF ERRORS IN INCREMENTAL MEASURING OR POSITIONING INSTRUMENTS
Alfons Ernst, Traunreut, Germany, assignor to Dr. Johannes Heidenhain GmbH, Traunreut, Germany
Filed Apr. 22, 1976, Ser. No. 679,170
Claims priority, application Germany, Apr. 26, 1975, 2518745
Int. Cl.^{2} G01B *11/04*
U.S. Cl. 33—125 R **15 Claims**

1. A digital electrical measuring instrument for measuring or adjusting the relative position of two objects which compensates for the guiding errors of the two objects, comprising:
a longitudinally extending, bending resistance hollow body having means for attachment to one of the objects;
a longitudinally extending, bending resistant measuring scale

within the hollow body, fastened to the hollow body by a highly elastic layer interposed between only a single surface of the scale and the adjacent surface of the hollow body;

a scanning head within the hollow body, having a connecting means extending out of the hollow body for attachment to the other object; and

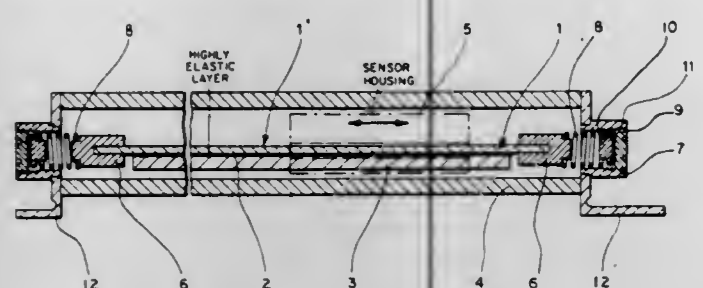

adjustable first and second force-generating means mounted at the longitudinal ends of the hollow body for applying forces, acting in opposite directions, to the longitudinal ends of the measuring scale, whereby forces of equal magnitude, acting in opposite directions, may be applied to the longitudinal ends to adjust the length of the scale to compensate for the guiding errors of the objects.

4,060,904
MEASURING ASSEMBLY FOR TURBINE THRUST BEARINGS
William K. Hiss, 7101 Belair Road, Baltimore, Md. 21206
Filed June 24, 1976, Ser. No. 699,434
Int. Cl.² G01B *3/22*
U.S. Cl. 33—172 R **3 Claims**

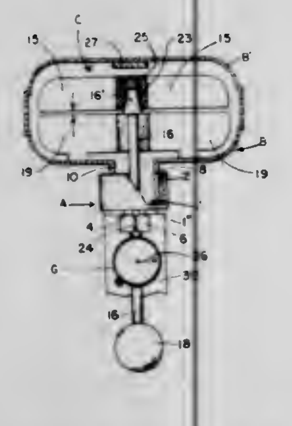

1. In a transmission torque converter comprising a casing having an opening therein, a bearing supporting a turbine having a central bore therethrough carried within said casing, and a hollow hub fixed about said casing opening of a larger diameter than the turbine bore and having at least its outer surface perpendicular and on the same axis as said turbine bore, an assembly for measuring the end play of said bearing, said assembly comprising:

a. a base having parallel upper and lower surfaces, each of said surfaces being in a single parallel plane, the upper surface of the base being adapted to receive the outer end of the casing supporting hub, means for supporting the base in a substantially horizontal plane, said base having an aperture extending therethrough, the walls of the aperture being substantially perpendicular to at least the upper surface of the base;

b. a spindle of smaller diameter than the diameter of the hollow hub and adapted to slide through said aperture in the base;

c. the upper end of the spindle being cone-shaped and tapered inwardly toward its outer upper end adapted to engage one end of the said turbine bore;

d. a gauge-supporting bracket having an aperture therethrough adapted to normally slide along said spindle and positionable on said spindle below the base, said bracket having means for releasably fixing the bracket to the spindle at selected locations;

e. a measuring gauge fixedly supported upon said gauge-supporting bracket having operatable means adapted to engage the underside of the said base for operating the same for measuring the movement of the spindle through the aperture in the base,

whereby the end play in the turbine bearing may be recorded on the gauge upon the upward movement of the spindle after its upper end has been placed in contact with the hub bore of the turbine.

4,060,905
GAUGE FOR MOUNTING WINDOW-SHADE BRACKETS
Stanley Light, 325 Grosvenor St., Douglaston, N.Y. 11363
Filed Aug. 19, 1976, Ser. No. 715,673
Int. Cl.² G01B *3/04*
U.S. Cl. 33—180 R **13 Claims**

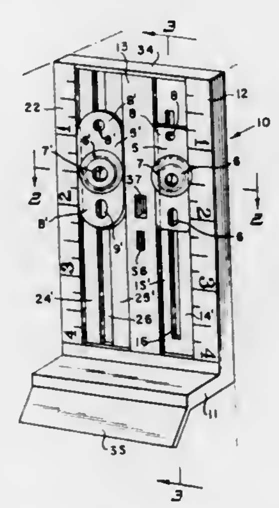

1. A guage for determining the proper mounting locations for apertured magnetically attracted mounting brackets for roller window-shades within window frames, comprising,

a. a substantially flat elongated guide member adapted to be positioned vertically on a window frame,

b. a track of uniform width on the outer face of said guide member comprised of a pair of elongate supports of paramagnetic material with a longitudinal slot therebetween coincident with the locus of the free movement of a central aperture in the bracket in the course of its freely adjustable movement along the track to a position providing adequate clearance for the fully rolled-up window-shade,

c. a lineal scale adjacent to one of said supports for noting the position of said central aperture relative thereto while said bracket is retained in a vertical plane solely by the force of magnetic attraction between said track and bracket, and

d. a projection extending laterally from the outer face of said guide member serving both as a handle for the latter as well as a stop for gauging the diametral dimension of the rolled up shade to provide a setting point for a marking impression on said window frame through an aperture of the bracket and the longitudinal slot of said track.

4,060,906
CENTERING APPARATUS FOR SENSING ALIGNMENT OF ENGAGING, ALIGNED MACHINE ELEMENTS, TYPICALLY SCREWS AND BOLTS WITH NUTS
Frieder Heizmann, Echichens, Switzerland, assignor to Robert Bosch G.m.b.H., Stuttgart, Germany
Filed Aug. 19, 1976, Ser. No. 715,713
Claims priority, application Germany, Sept. 11, 1975, 2540494
Int. Cl.² G01B *5/25*
U.S. Cl. 33—181 R **13 Claims**

1. Centering apparatus for centric alignment of engaging, aligned machine elements having a respective projecting part and a matching bore such as bolts, screws and nuts, and comprising

movable means (15, 16, 17) holding one of said elements and movable in a plane perpendicular to the axis of said one element in response to input signals to axially align it with the other of said elements and means (14) to axially move said elements with respect to each other,

a conical centering feeler (18, 18') carried by said movable means located in axial alignment with the central axis of said one of said elements and having its axis directed towards the other of the elements so that, upon axial movement of the feeler (18, 18'), the other element will

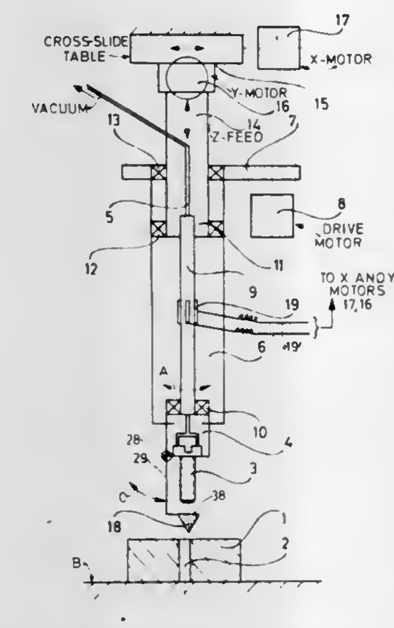

engage the conical feeler at a side wall of the cone and deflect the same if misaligned;

laterally flexible means (9) carried by said movable means holding said feeler (18, 18') in said axially aligned position while permitting lateral deflection thereof;

and sensing means (19) operatively associated with said flexible holding means (9) and sensing lateral deflections thereof, and providing deflection output signals, said deflection output signals being connected to said movable means (15, 16, 17) to control said movable means to move until the deflection output signals become zero or null, indicative of axial alignment of said elements.

4,060,907
MEDIA SKEW COMPENSATOR
Danny Allen Van Hook, Boulder, Colo., assignor to International Business Machines Corporation, Armonk, N.Y.
Filed Sept. 27, 1976, Ser. No. 726,892
Int. Cl.² B41B *27/42*
U.S. Cl. 33—184.5 **5 Claims**

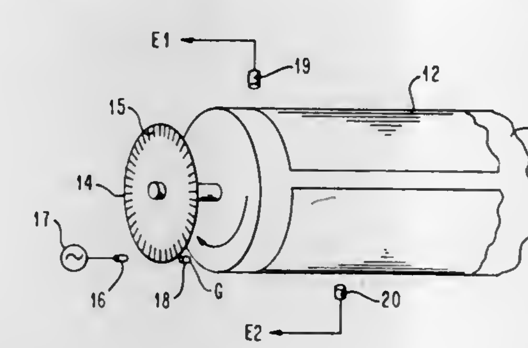

1. In a printer including a print media support and a plurality of print elements arranged to traverse the print media support in a first direction while the print media support moves cyclically in a substantially orthogonal second direction, circuit means for providing a signal indicative of the location of a print media mounted on the print media support comprising:

first sensor means movable in conjunction with said print elements and providing a first signal upon detecting the first of two parallel print media edges;

second sensor means fixed with respect to said media support for providing a second signal upon detecting the first of two parallel print media edges which are oriented substantially orthogonal to the edges sensed by the first sensor means;

first means operating in synchronism with said media support for providing a fixed plurality of signal pulses in each cycle of media support movement;

counter means responsive to said second signal for resetting under control thereof;

second means responsive to said first means and the said first signal for providing stepping signals to the said counter means under control of said first means output and for discontinuing said stepping signals in response to said first signals; and,

third means responsive to said second means for providing the attained counter value upon discontinuance of said stepping signals as a preset output indicative of the skew of the media edges with respect to the media support.

4,060,908
SIGHTING DEVICE FOR RELOCATION OF SITE
Robert M. Skallerup, P.O. Box 160, Cary, Ill. 60013
Filed Nov. 11, 1976, Ser. No. 741,035
Int. Cl.² G01C *21/00*
U.S. Cl. 33—275 R **7 Claims**

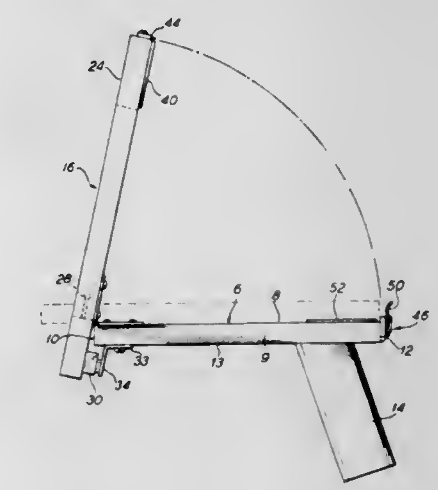

1. A folding site relocator to visualize reference points identifying intersecting lines, said recorded reference points being relocated through visualization to subsequently re-establish intersecting lines and relocate the site, including an elongated base member having a near eye sighting end, a remote eye sighting end and a fixed sighting element mounted at the near eye sighting end thereof; an elongated sighting member pivotally affixed at one end thereof to said remote eye sighting end of said base member, said sighting member having an opening therein adjacent a top side of said base member, a fixed sighting line in said opening and a sighting mirror having thereon a vertical index line mounted on said sighting member above said fixed sighting line, said fixed sighting element on said base member, said opening with said fixed sighting line therein and said sighting mirror with said vertical index line thereon all being aligned in the same vertical plane to permit a reference point and a linearly opposite reference point to be simultaneously identified to establish a reference line, whereby a reference point can be located by establishing a first and a second reference line which intersect one another.

4,060,909
SURVEYING ROD
Eugene C. Collins, East Star Rte. Box 196; Stephen E. Collins, Rte. 1 Box 39, and David N. Collins, 621 W. 15th St., all of Portales, N. Mex. 88130
Continuation of Ser. No. 554,989, March 3, 1975, abandoned. This application Mar. 2, 1976, Ser. No. 663,291
Int. Cl.² G01C *15/06*
U.S. Cl. 33—296 **3 Claims**

1. A surveying rod which permits direct reading from first and second predetermined reference elevation marks comprising a main elongated scale body having a front surface with a first dual scale including two graduated scales positioned adjacent each other on the front surface thereof, said first dual scale having a first zero reference mark on one of said two graduated scales on the first dual scale and the first predetermined reference mark on the other of said two graduated scales on said first dual scale with said first zero reference mark and said first predetermined reference mark positioned adjacent a lower end of the main scale body, said main scale body having a back surface with a second dual scale including two graduated scales positioned adjacent each other in the back surface thereof, said second dual scale having a second zero reference mark on one of said two graduated scales on the second dual scale and the second predetermined reference mark on the other of said two graduated scales on said second dual scale with said second zero reference mark and said second predetermined reference mark positioned centrally of the main scale body, and adjustable support means connected to the main scale body for positioning said first zero reference mark on the main scale body in visible locations adjacent a lower edge of the support means and at predetermined heights above the lower edge of the support means wherein the main scale body is an elongated tube open at both ends and has a first elongated slot on one side of the main scale body and wherein the support means comprises an elongated foot member slidable within the main scale body and a locking means attached to the foot member and slidable within the first elongated slot for locking the support member in any desired position.

4,060,910
ORIENTATION SYSTEM
Harold A. Gell, Jr., 13720 Lockdale Road, Silver Spring, Md. 20906
Filed Nov. 23, 1976, Ser. No. 744,325
Int. Cl.² G01C *17/26, 19/00*
U.S. Cl. 33—324 **62 Claims**

1. A relative azimuth indication system, comprising:

an indicator including an image area optically responsive to an electric field;

a first electrode assembly adjacent to the viewing side of said indicator;

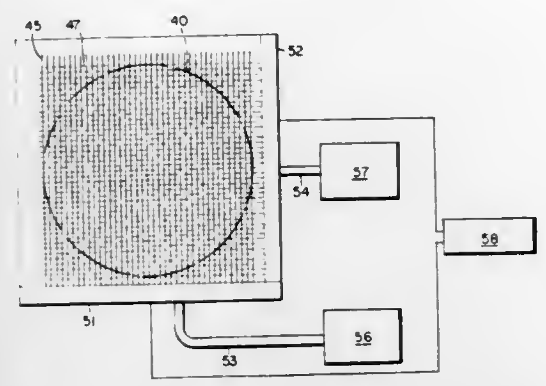

a second electrode assembly adjacent to the rear side of said indicator, said first and second electrode assemblies adapted to generate an electric field at selected points therebetween and through said indicator image area; and

a means to rotate said indicator relative to at least one of said electrode assemblies.

4,060,911
PROCESS FOR THE PREPARATION OF A CONTAINER CLOSED UNDER STERILE CONDITIONS AND CONTAINING LYOPHILIZED MATERIAL
Herbert Weiler, Marburg, Marbach; Hans Schneider; Wolfgang Von Janecek, both of Marburg an der Lahn, and Ludwin Weyrich, Buchenau, all of Germany, assignors to Behringwerke Aktiengesellschaft, Marburg an der Lahn, Germany
Filed Aug. 7, 1975, Ser. No. 602,911
Int. Cl.² B65B *31/04;* **B67B** *3/22, 3/24;* **F26B** *5/06*
U.S. Cl. 34—5 **1 Claim**

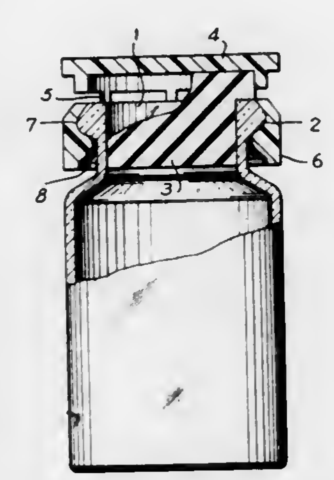

1. In a process for preparing and packaging a lyophilized material by the steps of filling a container with the material to be lyophilized, loosely closing said container with a rubber stopper, introducing the loosely-stoppered container with the material in the container into a lyophilization apparatus, which apparatus is maintained under sterile conditions, lyophilizing the material in the container, pressing the rubber stopper into the container while the container is in the lyophilization apparatus, whereby said container is sealed, and then removing the sealed container from the lyophilization apparatus, the improvements wherein (1) said container has an external circumferential bead thereon, (2) a snap-on closure cap having an internal circumferential groove sealably engageable with said bead on said container is also loosely placed on said container over said rubber stopper before the loosely-stoppered container is introduced into said lyophilization apparatus, and (3) said closure cap is simultaneously pressed into snap-on sealing engagement with said container, over said rubber stopper, as said rubber stopper is pressed into the container, whereby said container is provided, under sterile conditions, with a snap-on closure cap over said rubber stopper.

4,060,912
ABSORBER-CONTACTOR
Frank M. Black, 5112 Clay, Houston, Tex. 77023
Filed Sept. 15, 1976, Ser. No. 723,509
Int. Cl.² F26B *3/00*
U.S. Cl. 34—9 **11 Claims**

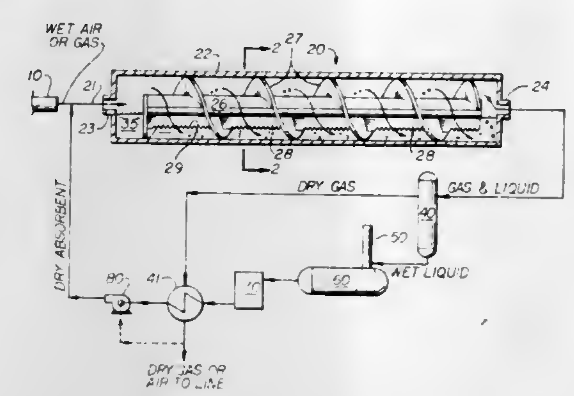

10. A method of drying a wet gas, comprising the steps of:

a. causing said wet gas to enter a cylinder only partially filled with an absorbent liquid;

b. causing said wet gas to follow a tortuous cyclical path through said cylinder, part of each cycle of said path being through said absorbent fluid and part of each cycle of said path being without said absorbent fluid;

c. causing said wet gas and at least a portion of said absorbent liquid to follow concurrent paths and exit said cylinder and to enter a series connected separator.

4,060,913
ASSEMBLY FOR DEHYDRATING AIR TO BE SUPPLIED TO BLAST FURNACE
Toru Yoshida, Hachioji; Kameo Hosoi, Warabi; Tokuzo Yoshida, Oita; Kazuyuki Shimizu, Bungotakada, and Koithiro Nakagawa, Oita, all of Japan, assignors to Takasago Thermal Engineering Co., Ltd and Nippon Steel Corporation, Japan
Filed Aug. 2, 1976, Ser. No. 710,567
Int. Cl.² F26B *21/06*
U.S. Cl. 34—80 **6 Claims**

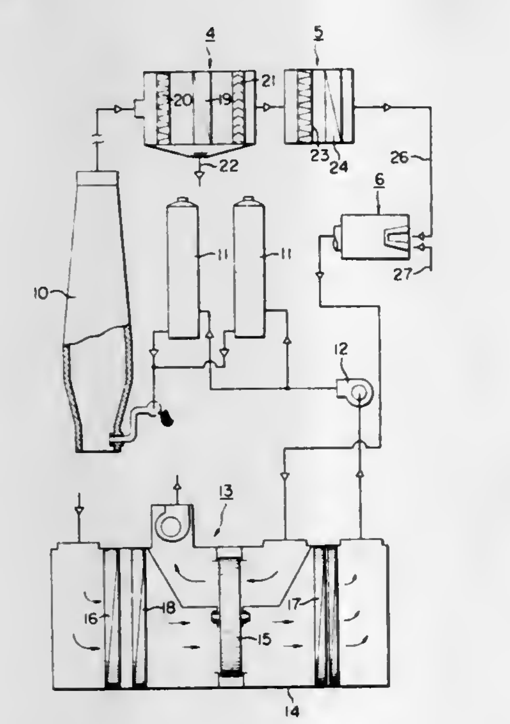

1. A dehydration assembly for dehydrating atmospheric air at the input side of a blower for use in the operation of a blast furnace, comprising:

a casing, the inside space of which is divided into regenerating and dehydrating zones by a partition plate;

at least one gas permeable rotor containing a regenerative moisture absorbent impregnated therein rotatably mounted in said casing so as to radially extend across the cross-sections of said regenerating and dehydrating zones, said rotor having two opposing flat surfaces with a clearance therebetween;

a pre-cooler located in said dehydrating zone upstream of said rotor;

an after-cooler located in said dehydrating zone downstream of said rotor;

a relative humidity regulator located in said dehydrating zone between said pre-cooler and said rotor;

piping means for circulating a heat transfer medium through said relative humidity regulator and said after-cooler;

a conduit for passing the dehydrated air leaving said after-cooler to the input side of the blower, and;

a conduit for introducing a hot combustion gas, obtained in a combustion device for burning a waste gas containing inflammable components, into said regenerating zone.

4,060,914
APPARATUS FOR TREATING MATERIAL WITH A GASEOUS MEDIUM
Charles E. Hoffman, Hatboro, Pa., assignor to Proctor & Schwartz, Inc., Philadelphia, Pa.
Filed Aug. 18, 1976, Ser. No. 715,419
Int. Cl.² F26B *3/04, 13/02*
U.S. Cl. 34—219 **9 Claims**

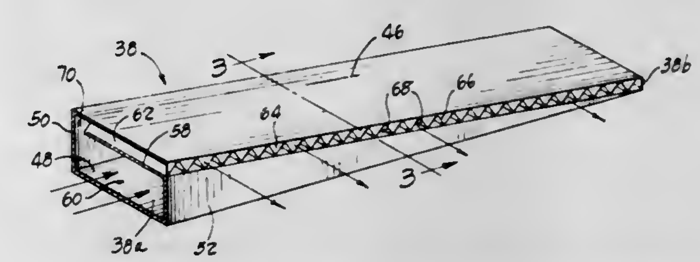

1. In a longitudinally extending gas treating apparatus including longitudinally moving carrying means for transporting goods to be gas treated through said apparatus, the improvement comprising a gas distribution box for dispensing a gaseous medium in said apparatus, said distribution box comprising

at least one plenum chamber having a longitudinal dimension and a transverse dimension, the plenum chamber longitudinal dimension extending laterally within the gas treating apparatus across the width of the goods being treated;

gas inlet means for introducing said gaseous medium into said plenum chamber;

a nozzle substantially coextensive with the plenum chamber in the plenum chamber longitudinal dimension;

means dividing the nozzle into a plurality of parallel, straight channels oriented towards the goods being treated, each channel having an inlet end and an exhaust end; and

means defining an elongated, constricted, substantially continuous slot substantially coextensive with the plenum chamber and nozzle communicating the plenum chamber with said channel inlet ends;

the slot being sufficiently narrow to establish a pressure differential between the plenum chamber and the nozzle.

4,060,915
MENTAL IMAGE ENHANCEMENT APPARATUS UTILIZING COMPUTER SYSTEMS
Malcolm J. Conway, Main Road, Gill, Mass.
Filed Aug. 2, 1976, Ser. No. 710,808
Int. Cl.² G09B *7/04*
U.S. Cl. 35—9 A **37 Claims**

1. In a method for developing an individual's capacity to form and utilize accurate mental images of data to which he has been previously exposed, the steps comprising:

a. providing an electrically generated visual display of an

environment simultaneously including a plurality of distinctive datum references within the displayed environment which may be acted upon by the subject and means for manipulation by the subject to electrically record his action to change any one of said distinctive datum references of said visual display;

b. providing an instruction to the subject requiring an action with said manipulatable means to change at least said one of the datum references of said visual display;

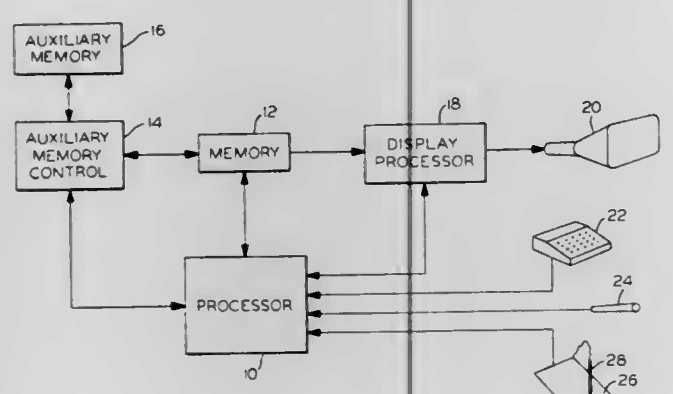

c. electrically recording invisibly to the subject his action in response to the instruction to change any one of said datum references of said visual display; and

d. subsequently presenting to the subject for comparison an electrically generated visual display of said displayed of said displayed environment including said datum references of said visual display as changed by the correct response to said instruction and that change to said any one datum reference of said displayed environment effected by said electrically recorded action of the subject.

4,060,916
SOLAR HEAT EDUCATIONAL DEVICE
George D. Finigan, Ballston Spa; Brian E. May, and Henry W. Zaininger, both of Ballston Lake, all of N.Y., assignors to Systems Using Nature Ltd., Ballston Lake, N.Y.
Filed Oct. 4, 1976, Ser. No. 729,111
Int. Cl.² G09B ***25/00***
U.S. Cl. 35—10 **10 Claims**

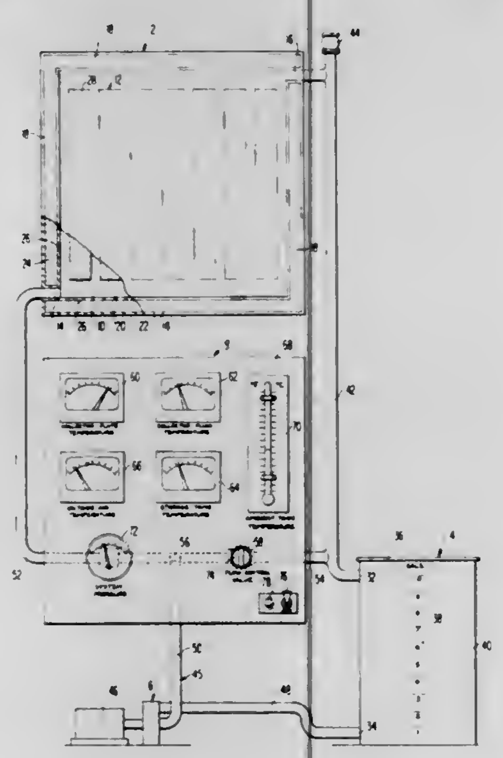

1. An educational device for use in instruction concerning solar heat utilization which comprises:

A. solar energy collector means comprising a chamber portion to contain liquid to be heated by solar energy absorbed by said collector means, a liquid flow inlet to said chamber portion, a liquid flow outlet from said chamber portion, and heat-exchanger means to assist in transfer of heat absorbed by said collector means to said liquid,

B. a liquid storage tank separate from said collector means having a fluid flow inlet and a fluid flow outlet,

C. first conduit means connecting said collector means outlet to said storage tank inlet for circulating liquid from the collector means to the storage tank,

D. second conduit means connecting said storage tank outlet to said collector means inlet for recycling liquid from the storage tank to the collector means,

E. pump means to produce liquid flow through said first and second conduit means,

F. a by-pass line connecting said first conduit means to said second conduit means of liquid flow therethrough external of said collector means,

G. a control valve in said by-pass line to regulate the quantity of liquid that flows therethrough, and

H. an instrument panel comprising measurement display means to indicate:

a. temperature of said heat-exchanger means,
temperature of liquid contained within said collector means,
c. temperature of liquid contained in said storage tank, and
d. pressure of liquid flowing in said second conduit means.

4,060,917
SOLE STRUCTURE PARTICULARLY FOR CLIMBING-BOOTS
Romolo Canale, Via Pastrengo, 3, Padova, Italy
Filed July 12, 1976, Ser. No. 704,681
Int. Cl.² A43B ***23/28***
U.S. Cl. 36—59 C **1 Claim**

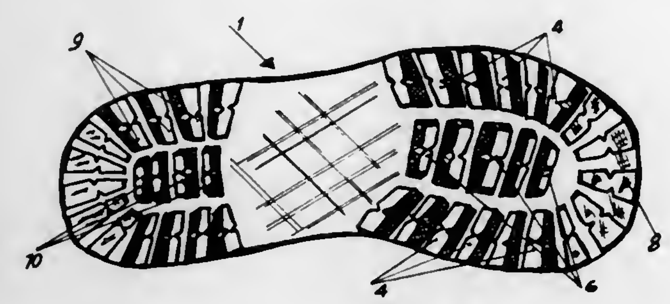

1. A sole structure particularly for rock climbing footwear comprising essentially a toe or front part and a heel or rear part, both said toe and heel having along the bottom perimeter thereof, substantially in the shape of a horseshoe, a plurality of first lugs extending substantially perpendicularly with respect to said perimeter, and internally to said perimeter a plurality of second lugs extending in a direction substantially perpendicular to said sole longitudinal direction, wherein said first lugs and the adjacent second lugs project from said sole with opposed inclinations with respect to a perpendicular direction to said sole, said first lugs provided on said front part of said sole being inclined opposite to said first lugs provided on said heel and said second lugs provided on said front part of said sole being inclined opposite to said second lugs provided on said heel.

4,060,918
LONGITUDINALLY EXPANDABLE SHOE
Albert Mandel, 3668 Courtney Lane, Bethpage, N.Y. 11714
Filed Sept. 8, 1976, Ser. No. 721,388
Int. Cl.² A43B ***3/26***
U.S. Cl. 36—97 **2 Claims**

1. A longitudinally expandable shoe comprising:

a heel assembly joined to a longitudinal sole assembly, said heel and sole assembly each having a set of flexible plate-like portions respectively interleaving with one another, one set of said flexible plate-like portions having a plurality of coextensive longitudinal slots, the other set having a

plurality of holes aligned substantially at right angles to the plate portion planes, each of said sets of flexible plate-like portions including outwardly facing first and second portions, and further comprising first and second metal plates joined to said first and second plate-like portions respectively, at least one of said first and second metal plates being formed with a longitudinal slit, the other of said first and second metal plates being formed with a threaded opening, a threaded bolt screwed into said opening passing through said slit, said arch support means having a portion facing away from the foot and being formed with a recess for receiving said bold, one end of

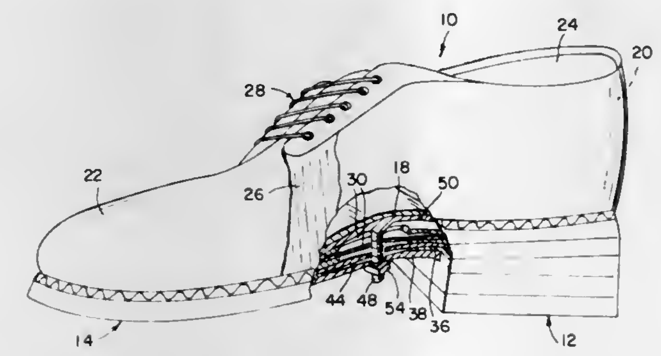

said bolt being freely rotatable in said recess, and a nut screwed onto the other bolt end, whereby said arch support means is movable in directions toward and away from the other of said metal plates in dependence of the direction of ratation of said bolt, said nut serving to hold said bolt in a selected position;

height adjustable arch support means joined with one end thereof to one end of said heel and sole assemblies for supporting the foot of a wearer;

an upper having front and rear portions attached to said sole and heel assemblies respectively;

elastic means joining the upper front and rear portions.

4,060,919
DATA RETRIEVING DEVICE
Hiromichi Sasaki, Nagareyama, Japan, assignor to Kabushiki Kaisha Fuji Seisakusho, Japan
Filed July 19, 1976, Ser. No. 706,611
Claims priority, application Japan, July 28, 1975, 50-104280[U]
Int. Cl.² G09F ***11/10***
U.S. Cl. 40—104 A **3 Claims**

1. In a data retrieving device having

a casing;

a rotational shaft horizontally supported between two side plates of said casing;

a pair of circular disks fitted on said rotational shaft;

a plurality of data indicating panels, each being supported hangingly around the periphery of said circular disks;

an electric motor to transmit rotational force generated by its rotation to said rotational shaft;

a plurality of data retrieving keys corresponding in number to said data indicating panels, said keys being arranged regularly on a key board; and

a short circuit means for said motor, the improvement comprising,

a. a contact piece provided at the side of one of said side plates to connect one end of said rotational shaft to a power source through said motor;

b. a switch-board for regulating the rotational angle of said motor, said switch-board being fixed on the other side plate opposite to said side plate where said contact piece is located, and having a rotary contact piece fitted at the other end of said rotational shaft and a plurality of fixed contact pieces arranged radially on a rotational locus of said rotary contact piece;

c. a plurality of normally closed type contact pieces for short-circuiting said motor circuit provided on one end of said keys, one end of each of said closed contact pieces being connected to each corresponding fixed contact piece on said switch-board, and the other end of

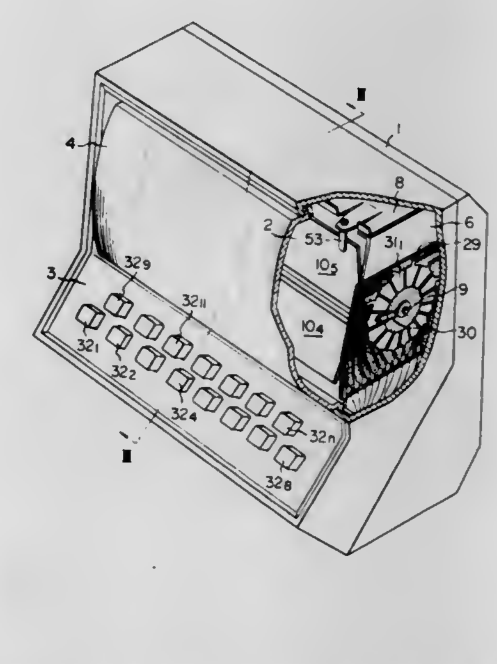

said each contact piece being connected said power source; and

d. a gear train provided on said side plate at the opposite side of said switch-board, said gear train transmitting rotational force of said motor to a gear fitted on said rotational shaft,

said rotational shaft being made of electrically conductive material, and forming a part of the electric circuit for said motor; and

each of said plurality of data retrieving keys having an engaging pawl thereon which is mechanically engaged with an engaging member when said key is pushed downward.

4,060,920
SIGNBOARD
Lindell N. Edwards, 10601 Leebur Drive, St. Louis, Mo. 63128
Filed Apr. 22, 1976, Ser. No. 679,214
Int. Cl.² G09F ***7/02***
U.S. Cl. 40—140 **10 Claims**

1. A signboard which is elongated and tubular and which is generally circular in cross section and which comprises a plurality of sections that are elongated and that are generally arcuate in cross section, said sections being disposed in edge-to-edge relation to make said signboard tubular and to define said circular cross section for said signboard, each of said sections having portions of the outer surface thereof coacting with portions of the outer surfaces of the rest of said sections to define a cylinder of generally circular cross section, each of said sections having the circumferentially-spaced elongated side edges thereof displaced radially inwardly of said cylinder of generally circular cross section, each of said sections having

interacting surfaces adjacent said inwardly-displaced elongated side edges thereof which mate with and coact with complementary surfaces adjacent said inwardly-displaced elongated side edges of abutting sections to interlock said sections together, said interacting surfaces adjacent said inwardly-displaced elongated side edges of said abutting sections

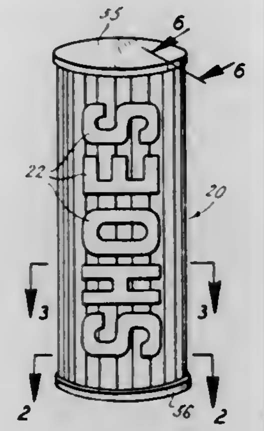

enabling said sections to define and constitute a frame-free signboard, the inward displacement of said elongated side edges of each of said sections making the joints between abutting sections less visible than said portions of said outer surfaces of said sections which define said cylinder of generally circular cross section.

4,060,921
ANIMAL EAR TAG
Owen R. Robinson, Rte. 2, Douglass, Kans. 67039
Filed Apr. 19, 1976, Ser. No. 678,130
Int. Cl.[2] G09F *3/12*
U.S. Cl. 40—301 **4 Claims**

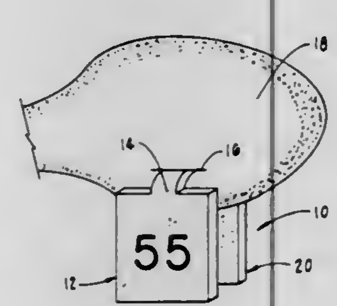

1. An animal identification ear tag, the tag comprising:
a flat angular shaped first ear piece member having an elongated neck portion integrally formed therein and extending outwardly therefrom, the neck portion of said first ear piece member inserted through a slit in the animal's ear;
a flat angular shaped second ear piece member substantially identical to said first ear piece member, said second ear piece member having an elongated neck portion integrally formed therein and extending outwardly therefrom;
a pair of apertures in the neck portion of said first ear piece member, said apertures in a spaced relationship to each other and along the length of the neck portion of said first ear piece;
a pair of apertures in the neck portion of said second ear piece member, said apertures in a spaced relationship to each other and along the length of the neck portion of said second ear piece member, the apertures of said second ear piece member indexed with the apertures of said first ear piece member; and
a "U" shaped staple, the ends of said staple inserted through the apertures of said first ear piece member and said second ear piece member and folded over thereby securing said first ear piece member to said second ear piece member, the neck portion of said second ear piece member includes a pair of raised portions adjacent the apertures in said second ear piece member, said raised portions are used in bending the end portions of said "U" shaped staple over in securing the staple to the neck portion of said second ear piece member.

4,060,922
ANIMAL IDENTIFICATION TAG
Charles Gerardus Reggers, Palmerston North, New Zealand, assignor to Delta Plastics Limited, Palmerston North, New Zealand
Filed Mar. 11, 1976, Ser. No. 666,059
Claims priority, application New Zealand, Mar. 12, 1975, 176913
Int. Cl.[2] G09F *3/00*
U.S. Cl. 40—302 **9 Claims**

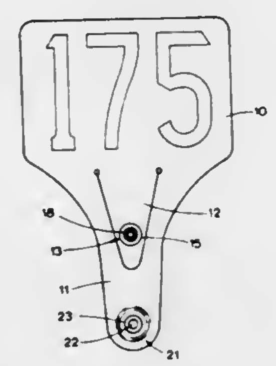

1. A one piece resilient material identification tag for an animal comprising:
a flat identification panel;
a first attachment portion in the form of a panel narrower than said identification panel and extending therefrom;
a second attachment portion in the form of a flap centrally disposed in said first attachment portion panel and extending away from said identification panel, said first and second attachment portions being substantially coplanar with said identification panel; and
an upstanding headed spike and spaced apart from the spike a hole of smaller cross-sectional size than the largest cross-sectional size of the spike, said spike and hole being respectively part of said second and first attachment portions and positioned at different distances from the identification portion whereby the said first and second portions can be displaced from the plane of the identification portion so that the tag can be installed on the top of the ear of an animal, with the identification part in a vertical attitude, by passing the head of the spike through the ear and into said hole.

4,060,923
MINNOW DIPPER
Louis S. Schmitz, Rte. No. 1, Hankinson, N. Dak. 58041
Filed Oct. 12, 1976, Ser. No. 731,567
Int. Cl.[2] A01K *97/00*
U.S. Cl. 43—4 **9 Claims**

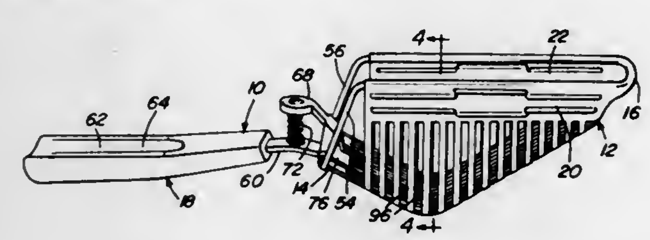

1. A dipper construction including a body defining an upwardly opening receptacle having a bottom defining drain passages therethrough, said bottom including adjacent relatively and oppositely inclined bottom sections defining an upwardly opening included angle of between 90° and 180°, a hold-down member including opposite marginal edge portions, one of said marginal edge portions being pivotally supported from the marginal edge of one of said sections remote from the other section for swinging about an axis generally paralleling said one marginal edge portion and said marginal edge between an active position with said hold-down closely overlying the upper surfaces of said one section and an inactive position with the other of said opposite marginal edge portions elevated above said bottom.

4,060,924
FISHING POLE EYE
Leroy G. Cunningham, 1515 S. 118th E. Ave., Tulsa, Okla. 74128
Filed May 17, 1976, Ser. No. 686,749
Int. Cl.[2] A01K *87/04*
U.S. Cl. 43—24 **1 Claim**

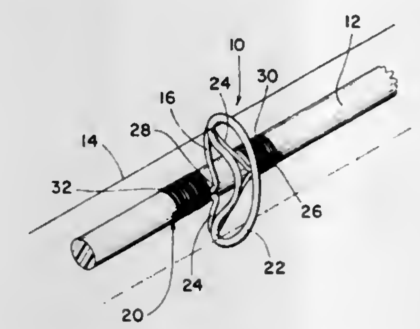

1. An eye for a fishing pole having a fishing line and comprising attachment means engageable with the outer periphery of the pole for securing the eye thereto, and elongated arcuate loop means carried by the attachment means, said loop means including an arcuate opening of substantially constant width through the length thereof and having an internal length sufficiently long to surround slightly more than one half the circumferential distance around the outer periphery of the pole for receiving the fishing line therethrough, said attachment means comprising an open saddle member having an arcuate configuration complementary to the configuration of the outer periphery of the pole for engagement therewith, oppositely disposed outwardly extending arm members engageable with the outer periphery of the pole and extending longitudinally therealong, and winding means wound around the outer periphery of the pole and the arm members for securing the eye to the outer periphery of the pole, said saddle member including a pair of oppositely disposed substantially V-shaped elements, and said arm members each including a pair of abutting arm members each being integral with the respective V-shaped element.

4,060,925
FISHING BOBBER AND BAIT GUARD
Arnett Bias, Cuyahoga Falls, Ohio, assignor to Bait Guard Inc., Cuyahoga Falls, Ohio
Filed July 8, 1976, Ser. No. 703,523
Int. Cl.[2] A01K *97/04*
U.S. Cl. 43—41.2 **6 Claims**

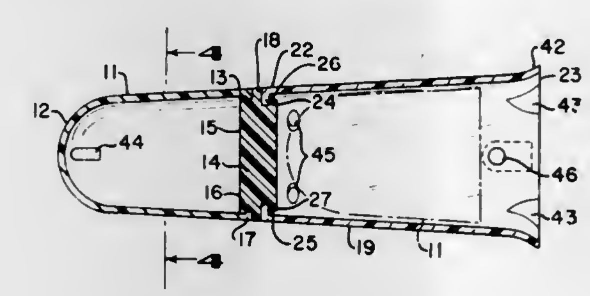

1. A fishing bobber and bait guard assembly comprising a hollow, generally cylindrical, float portion having a rounded nose and a disc closure plate, a bait container portion having a generally cylindrical wall open at both ends, said wall at a first one of said ends being mounted on said closure plate, a second one of said ends being open for insertion of the bait, said closure plate having locking lugs spaced from a surface of said plate and said container portion having a locking flange extending radially inward from said wall at said first one of said ends for positioning between said locking lugs and said surface of said plate in locking relationship.

4,060,926
FISHING LURE WITH WEIGHTED HOOK-ATTACHING SWIVEL AND METHOD OF MAKING SAME
Carl R. Cordell, Jr., P.O. Box 2020, Hot Springs, Ark. 71901
Filed May 14, 1976, Ser. No. 686,500
Int. Cl.[2] A01K *85/00*
U.S. Cl. 43—42.44 **2 Claims**

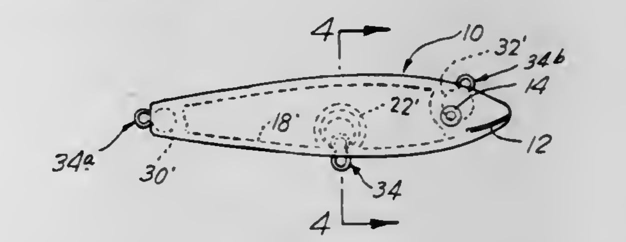

1. A fishing lure comprising a lure body formed of two complemental halves, each half being hollow and having a peripheral mating rim along which the halves are secured together, a cavity in the lower portion of said lure body having an opening leading to the exterior of the body, said cavity being formed by a pair of semi-spherical, mating walls one in each of said complemental halves and being disposed entirely within the hollow portion defined by the peripheral rim thereof, said semi-spherical walls of the cavity being joined together to form a spherical wall within the hollow halves to brace and strengthen the lure body and divide the same into two separate hollow chambers, and a ball-shaped weight rollably disposed in said cavity and secured to the upper portion of a swivel member whose lower portion loosely extends through said opening in the lure body and terminates below the lure body in an eye for swiveling attachment of a fish hook, said swivel member having the shape of a figure eight, the said upper portion being a loop completely embedded in said weight and being connected to said lower eye by a constricted bight portion loosely extending through the opening of the lure body.

4,060,927
FISH WEIGHT BLIND BINDING
William A. Haun, and Gladys M. Haun, both of 3504 Meadowlark Drive, Casper, Wyo. 82601
Filed Oct. 7, 1976, Ser. No. 730,346
Int. Cl.[2] A01K *95/00*
U.S. Cl. 43—43.1 **1 Claim**

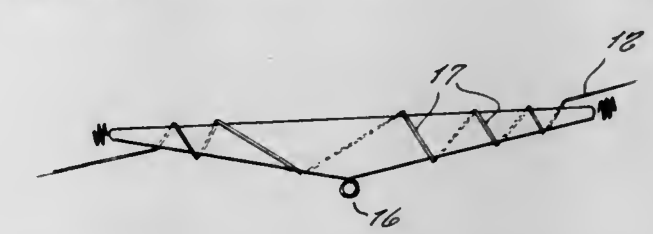

1. A fish weight blind binder, comprising, in combination, an elongated lead weight and a length of stainless steel wire, said weight being substantially triangular in transverse cross-section, said weight having a boat keel shape and having a downward eyelet at its center for snelled hooks, opposite ends of said weight tapering triangularly and each end having an eyelet, said eyelets at each end comprising a rotatable wire coil around a stationary pin, said stainless steel wire being spirally wrapped five or more turns around said weight so as to form three sharp bends upon each single turn around said weight,

said stainless steel wire additionally selectively being insertable through said end eyelets.

4,060,928
FISH HOOK
Joseph P. Messler, 4410 E. 46th Place, Tulsa, Okla. 74135; Thomas E. Messler, 5740 S. 72nd E. Ave., and James P. Messler, 7832 S. 70th E. Ave., both of Tulsa, Okla. 74136
Filed Feb. 6, 1976, Ser. No. 655,902
Int. Cl.² A01K *83/00*
U.S. Cl. 43—43.16 **8 Claims**

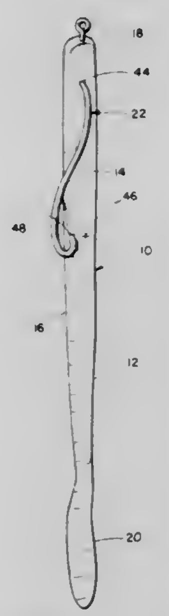

1. A fish hook comprising;
a. line attachment means at a leading end thereof;
b. a bow portion curved through approximately 180° at the opposite trailing end thereof;
c. a sharpened barbed end portion carried by the front end of the bow portion;
d. an elongated shank supported between the rear end of the bow portion and the line attachment means, the shank having a leading straight segment which is attached to the line attachment means and a remaining longer trailing segment attached to the rear end of the bow portion, the juncture between the shank leading and trailing segments comprising a compound bend made up of a rearward bend and a sidewise bend, the said trailing segment being curved into an arcuate segment with the trailing end thereof intersecting the rear end of the bow portion opposite the barbed end at an angle substantially equal to the angle of the sidewise first mentioned bend.

4,060,929
TOY DETECTIVE SET
Burton C. Meyer, Downers Grove, and Robert K. Allen, Hinsdale, both of Ill., assignors to Marvin Glass & Associates, Chicago, Ill.
Filed Feb. 13, 1976, Ser. No. 658,030
Int. Cl.² A63H *33/00, 33/22*
U.S. Cl. 46—11 **17 Claims**

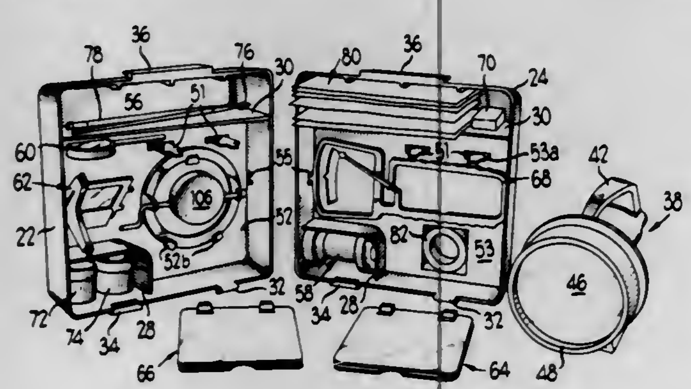

1. An amusement set, comprising: a casing having two mateable casing portions each having a top wall and a bottom wall, said casing portions mating along a peripheral seam line, hinge means for hingedly connecting said casing portions along the seam line, lockable members at each of the casing portion top walls adjacent the top wall seam line, a flashlight having a grippable handle and including lock means between the flashlight and casing for releasably locking said lockable members of said casing and releasably joining the flashlight to the casing top wall whereby the flashlight handle serves as a carrying handle for the casing and the flashlight with the casing locked.

4,060,930
TOY AIRPLANE LAUNCHER
Michael O'Hara Hirtle, Torrance, and James Edward Morse, Lawndale, both of Calif., assignors to Mattel, Inc., Hawthorne, Calif.
Filed Sept. 29, 1976, Ser. No. 727,885
Int. Cl.² A63H *27/04*
U.S. Cl. 46—81 **14 Claims**

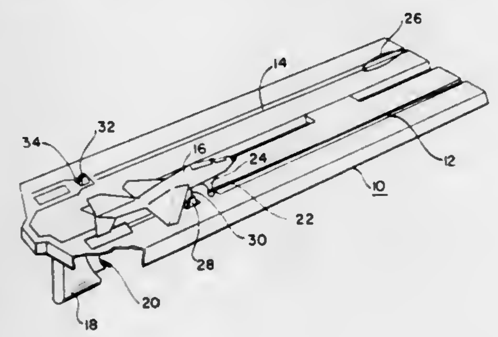

1. In a toy airplane launcher, the combination comprising:
a plurality of toy airplanes, each of said airplanes having a downwardly depending projection;
a launch platform adapted for supporting said airplanes;
resilient propoulsion means on said platform adapted for releasable engagement with each of said airplanes;
a trigger assembly movably mounted on said platform and having integral therewith a plurality of posts, each of said posts being offset from any other and being adapted for engaging said projection on said airplane to restrain the so-engaged airplane against the force of said resilient means; and
means operative on movement of said trigger assembly to displace each of said projections relative to its engaged post, the post and platform being so configured to provide individual launching of each of said airplanes with a time differential between launchings, said time differential being inversely proportional to the speed of movement of said trigger assembly.

4,060,931
TOY DUMP TRUCK HAVING CLOSED CONTAINER OF GRANULAR MATERIAL
Philip H. Knott, One San Antonio Place, San Francisco, Calif. 94133
Filed Sept. 27, 1976, Ser. No. 727,032
Int. Cl.² A63H *17/06*
U.S. Cl. 46—112 **18 Claims**

1. A toy truck for simulating the dumping of granular material, comprising
a truck chassis and
a closed container containing granular material, said container being pivotally mounted to said truck chassis and comprising
a dumping chamber having a transparent upwardly facing wall, said dumping chamber normally extending in a generally horizontal direction,
a receiving chamber disposed below said dumping chamber and
an aperture of predetermined size connecting said dumping chamber and said receiving chamber, said aperture being positioned to permit said granular material to pass from said dumping chamber to said receiving chamber

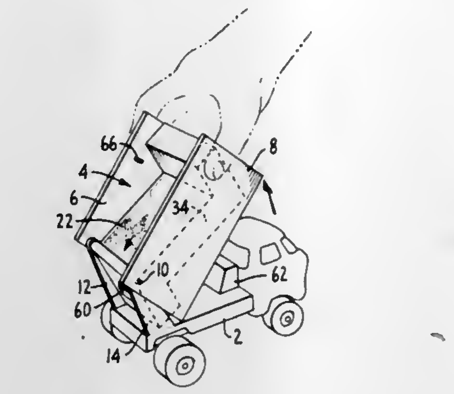

when said container is pivoted to an orientation with the forward portion thereof pointing forward and upward.

4,060,932
DOLL WITH INTERNAL WARMING MECHANISM
Armetia E. Leto, 830 Deer Park Road, Dix Hills, N.Y. 11746, and Lawrence H. Bauer, 171 W. 9th St., Deer Park, N.Y. 11729
Filed Mar. 22, 1976, Ser. No. 668,958
Int. Cl.² A63H *3/24*
U.S. Cl. 46—116 **11 Claims**

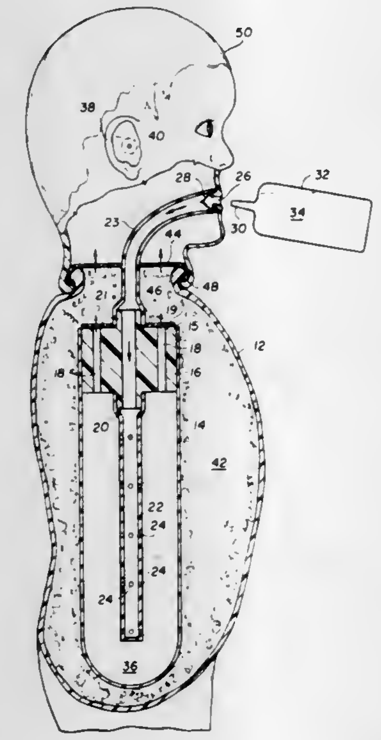

1. A doll simulating a warm-blooded mammal comprising
a head, torso and limb portions,
a non-porous heat conductive skin covering said portions,
a quantity of an exothermic salt contained within at least one of said portions, said quantity of said salt being sufficient, when wet, to produce heat to warm said skin to a temperature simulating that of a warm-blooded mammal,
and fluid communication means extending from the outside of said skin to said salt for wetting and drying said salt.

4,060,933
TISSUE CULTURE TECHNIQUE UTILIZING A SPECIFIC LIGHT SOURCE
Prakash G. Kadkade, Marlborough, Mass., assignor to GTE Laboratories Incorporated, Waltham, Mass.
Filed Dec. 20, 1976, Ser. No. 752,485
Int. Cl.² A01G *1/00*
U.S. Cl. 47—58 **11 Claims**

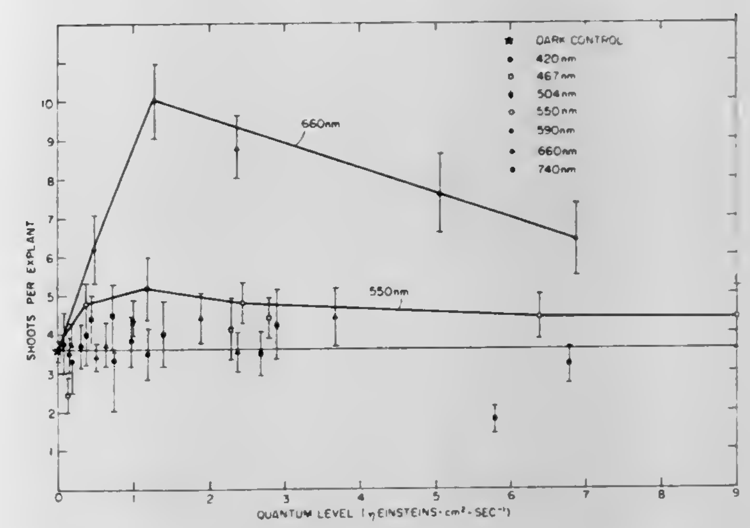

1. A method for stimulating organogenesis of explants in a tissue culture medium comprising the step of:
illuminating the explant during at least a portion of its differentiation stage with light having a predominate spectral emission at approximately 660nm.

4,060,934
WATER TENDER
Leonard L. Skaggs, 1830 Taft Highway, Signal Mountain, Tenn. 37377
Filed Sept. 27, 1976, Ser. No. 726,599
Int. Cl.² A01G *27/00*
U.S. Cl. 47—79 **1 Claim**

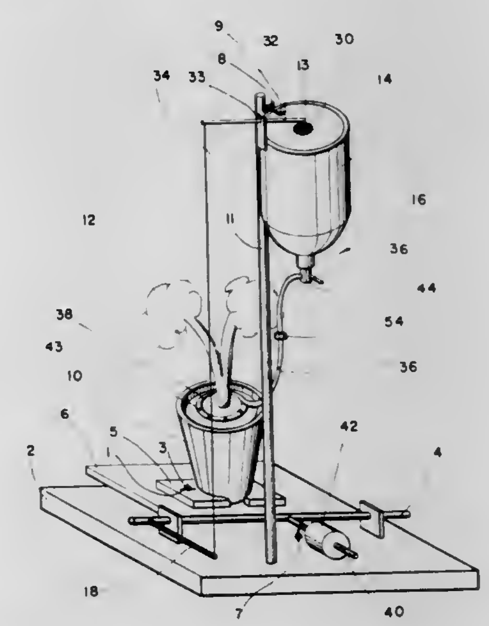

1. An automatic plant watering apparatus, comprising:
a support base;
a horizontal pivot shaft pivotally mounted on said support base;
a cantilever platform rigidly mounted to said pivot shaft;
a counter weight mounted to said pivot shaft opposite to said cantilever platform;
a plant container supported by said cantilever platform containing a plant to be watered, counter-balanced about said pivot shaft by said counter weight;
a fluid reservoir mounted on said support base in an elevated position with respect to said plant container;
valve means mounted on said fluid reservoir, operatively

connected to said pivot shaft, for controllably conducting fluid from said reservoir to said plant container in response to the pivotal motion which said pivot shaft undergoes when said counter weight overbalances said platform;

an actuating lever rigidly mounted to said pivot shaft on a first end, with a second end being said operative connection to said valve means;

a valve seat of said valve means having a lower threaded shank portion which engages a corresponding threaded portion in the bottom of said reservoir, forming an opening through which the fluid in said reservoir may drain;

a flapper valve of said valve means having one end pivotally mounted to said valve seat, for sealably engaging said opening in said seat by the natural force of gravity;

a weight mounted on said flapper valve, for pressing said flapper valve tightly against said seat, thereby closing said valve means;

a funicular connection between said flapper valve and said actuating lever, being said operative connection between said valve and said pivot shaft;

a rocker lever, pivotally mounted on top of said fluid reservoir;

said funicular connection passing through an opening in the top of said reservoir and connecting to a first end of said rocking lever;

a second funicular connection between a second end of said rocking lever and said second end of said actuating lever to provide an operative connection between said valve means and said pivot shaft is made;

a manifold fluid distribution block mounted in said valve means, being a circular hollow tube fastened to a circular hole in the bottom of said valve seat, having outlet ports in the side thereof through which delivery tubes may be inserted, each conducting fluid to one of a plurality of plants;

whereby a plurality of plants may be automatically watered by sensing the weight loss of water which has been evaporated and transpired from the plant in said plant container.

4,060,935
REVOLVING DOOR WITH SECURITY LOCKING MECHANISM
Larry J. Miller; Marion V. Miller, both of Reed City, and Richard E. Liebetrau, Cadillac, all of Mich., assignors to Swiss Aluminium Limited, Switzerland
Filed Jan. 24, 1977, Ser. No. 761,674
Int. Cl.^{2} E05F *15/20;* **E05D** *15/02*
U.S. Cl. 49—25 **11 Claims**

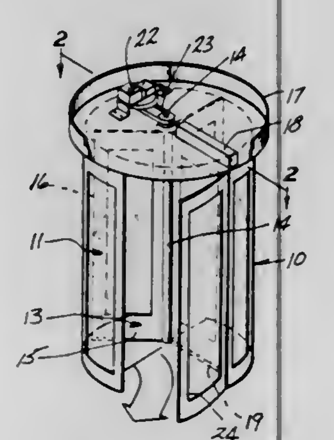

1. In a revolving door assembly comprising a generally cylindrical, vertically extending door housing, said door housing defining diametrically opposed vertically extending openings therein, a vertically mounted door comprising a central axis and at least two radially extending door leaves connected thereto, said door leaves adapted for rotation about said axis, and a canopy mounted above said door in overlapping relation to said door housing, said canopy containing means for controlling and arresting the movement of said door comprising a linearly elongated radiant energy emitting device adapted to provide a generally rectangular, planar energy field, said field of equal displacement to one of said leaves and extending in the vertical plane, said energy emitting device mounted in radial relation to the axis of said revolving door whereby said energy field abuts at one end thereof with said axis and at the opposite end thereof with a vertical edge of one of said openings, said energy emitting device adapted upon the interruption of any portion of said energy field by a foreign object to actuate the locking of said revolving door in fixed position, whereby passage of man or objects is prevented, wherein said door leaves define upper horizontal edges passing adjacent said canopy, said upper horizontal edges provided with surfaces reflective to said energy field whereby the interruption of said field during the passage therethrough of said leaves is prevented.

4,060,936
CONTAINER AND DOOR
Richard H. Jensen, Torrance, and Peter P. Parris, Tustin, both of Calif., assignors to Brooks & Perkins, Incorporated, Southfield, Mich.
Filed July 8, 1976, Ser. No. 703,616
Int. Cl.^{2} E05C *21/02*
U.S. Cl. 49—465 **17 Claims**

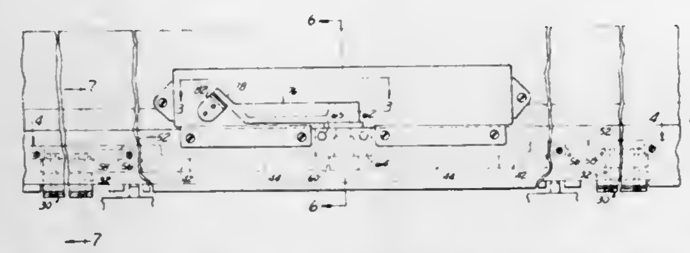

1. A container having a generally rectangular opening, a door movably bodily into and out of said opening, said container having at the top of the opening upper retainer means for releasably engaging the top edge of said door and a bottom rail extending across the opening at the bottom thereof, said rail having inwardly directed spaced flanges leaving an upwardly open elongated slot therebetween, the spacing between said flanges being increased for a limited distance to define a lock-receiving slot-enlargement, said door having means for engaging said upper retainer means to support the upper edge of said door against forward displacement except when the entire door is moved substantially vertically, the bottom edge of said door having a downwardly depending lock member shaped to move through said slot-enlargement but dimensioned to be engageable with the underside of said flanges adjacent said slot when said lock member is moved longitudinally of said rail out of registration with said slot-enlargement, and means for moving said lock member along the bottom edge of said door after insertion downwardly through said slot-enlargement to retain said door against vertical movement and hence against removal from said container opening.

4,060,937
GRINDER FOR GLASS PLATES OR THE LIKE
Joseph Glazer, Eastlake, Ohio, assignor to Morse Safety Products Co., Cleveland, Ohio
Filed Sept. 27, 1976, Ser. No. 726,588
Int. Cl.^{2} B24B *9/10*
U.S. Cl. 51—80 A **8 Claims**

1. A machine for grinding the edges of rectangular articles of glass or the like comprising first and second track means operable to respectively embrace first and second pairs of opposed edges of a row of abutting articles to support each article in said row against motion in all directions excepting along said track means and guide each piece within said row for movement along said track means, the exit end of said first track means intersecting the entrance end of said second track means at right angles, first and second pushers at the respective entrance ends of said track means operable with repeated cycles to engage one article and push it along said track means and thereby move the associated row along the associated track means toward the exit end thereof, said first pusher operating during each cycle to deliver a single article to the entrance end

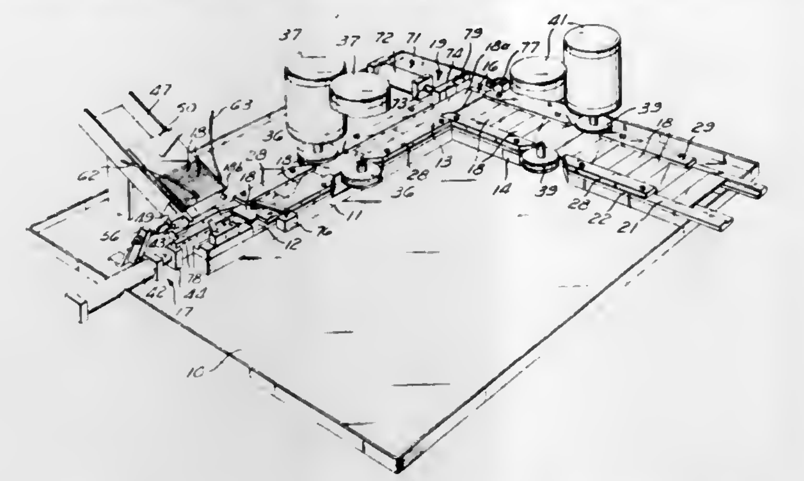

of said second track means, said second pusher operating out of phase with said first pusher to move said single article into said second track means and clear its entrance for a subsequent article, grinding means intermediate the ends of each of said track means operable to grind the opposed guided edges of articles as they move along the associated track means.

4,060,938
GLASS BEVELING MACHINE
Lee H. Barron, Sr., 4515 Alta Canyada Road, La Canada, Calif. 91011
Filed Apr. 20, 1976, Ser. No. 678,671
Int. Cl.^{2} B24B *9/10*
U.S. Cl. 51—110 **17 Claims**

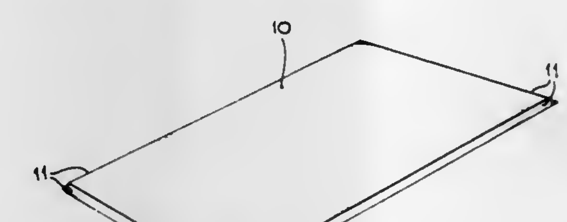

1. A glass beveling machine, comprising

bevel grinding and polishing means; a table for supporting a glass plate to be beveled in generally face-up position and with an edge of the plate oriented for operation of said grinding and polishing means on said edge;

means enabling relative movement of the grinding and polishing means and the table in a beveling pass comprising table guiding structure and means for reciprocatingly driving the table along said guiding structure;

said table comprising an array of supporting bars in a slat-like spaced relation;

limited contact glass plate supporting button-like members in spaced relation on said bars;

and means located along an edge of the table nearest said bevel grinding and polishing means for holding the glass plate on the table against displacement during the beveling pass.

4,060,939
DEVICE OF PLANE-PARALLEL TREATMENT OF SURFACES
Gilbert Dubied, Vilars, and Ernst Kuenzi, Corcelles, both of Switzerland, assignors to Laboratoire Suisse de Recherches Horlogeres, Switzerland
Continuation-in-part of Ser. No. 581,090, May 27, 1975, abandoned. This application June 8, 1976, Ser. No. 693,753
Claims priority, application Switzerland, June 5, 1974, 7770/74
Int. Cl.^{2} B24B *25/00*
U.S. Cl. 51—157 **8 Claims**

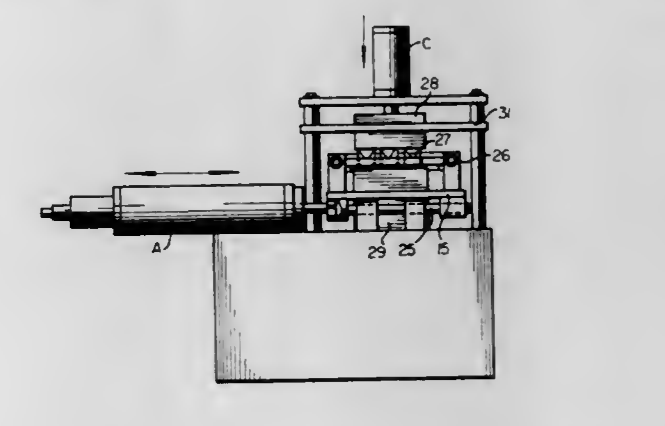

1. A device for simultaneously treating two plane parallel surfaces of an article, wherein said device comprises:

one lower and one upper planar polishing blocks, the lower polishing block adapted for supporting an article to be treated,

fluid cylinder means for simultaneously subjecting an article to longitudinal and transverse movements between and in contact with said polishing blocks; and

means for independently controlling the velocity and extent of each of said longitudinal and transverse movements, respectively.

4,060,940
ADJUSTABLE GUARD CONSTRUCTION FOR CUT-OFF MACHINE
Erik John DeWitt, deceased, late of Lutherville, Md., by Carol Lynn Hartsock DeWitt, administratrix, assignor to The Black and Decker Manufacturing Company, Towson, Md.
Filed Jan. 13, 1976, Ser. No. 648,759
Int. Cl.^{2} B24B *23/00*
U.S. Cl. 51—170 PT **9 Claims**

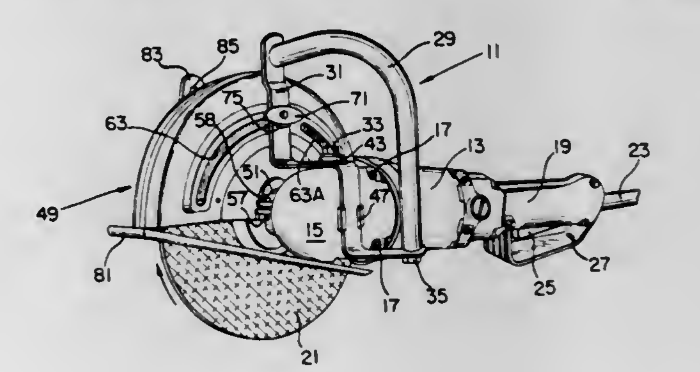

1. A circular cut-off machine comprising a housing having an electric motor therein, transmission means interconnecting said electric motor and an output spindle, an abrasive disc fixed to said output spindle, handle means for said tool including a first handle positioned rearwardly of said housing and a second handle connected to said housing so as to be positioned at the forward end portion thereof and adjacent said abrasive disc, a protective guard for said abrasive disc including a guard encompassing a portion of said disc, said guard being supported upon said housing adjacent said output spindle and adjustable about the axis of said spindle, and means associated with said second handle and releasably secured to said guard at a posi-

tion radially spaced from said spindle axis for rigidly securing said guard in its adjusted position to said housing through said second handle.

4,060,941
HONE FOR ROTARY ELECTRIC RAZOR CUTTERS
Arvid S. Wahlstrom, Rte. 4, Grafton, N.H. 03240
Filed June 10, 1976, Ser. No. 694,701
Int. Cl.² B24D *15/04, 15/10*
U.S. Cl. 51—211 H **6 Claims**

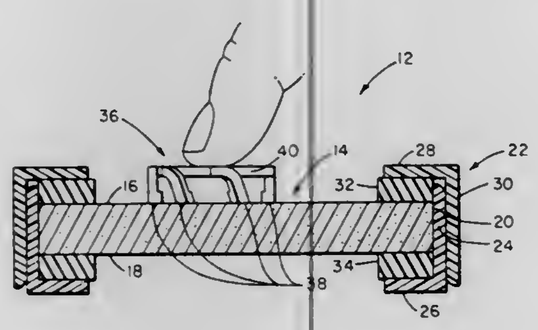

1. A manual hone for a rotary electric razor cutter with plural coplanar cutting surfaces, said hone comprising, in combination,
- a stone of uniform thickness having flat parallel top and bottom surfaces, the surfaces having rounded outlines joined by a peripheral side,
- and a retainer for the stone formed of a resilient cushioning material and comprising separate inner and outer parts, the inner part having a first portion closely fitting the entire peripheral side and extending substantially beyond said outlines in directions perpendicular to said surfaces and a second portion integral with the first portion and extending in a plane normal thereto, the outer part having a third portion extending in a plane normal to the first portion and a fourth portion integral with the third portion, extending in a plane normal thereto and slidingly fitting over said first portion, the stone being supported fittingly between said second and third portions.

4,060,942
HOOD ADJUSTING APPARATUS
William Page White, and Kenneth Robert Hawkins, both of Cincinnati, Ohio, assignors to Cincinnati Milacron, Inc., Cincinnati, Ohio
Filed Apr. 26, 1976, Ser. No. 680,274
Int. Cl.² B24B *55/04*
U.S. Cl. 51—268 **1 Claim**

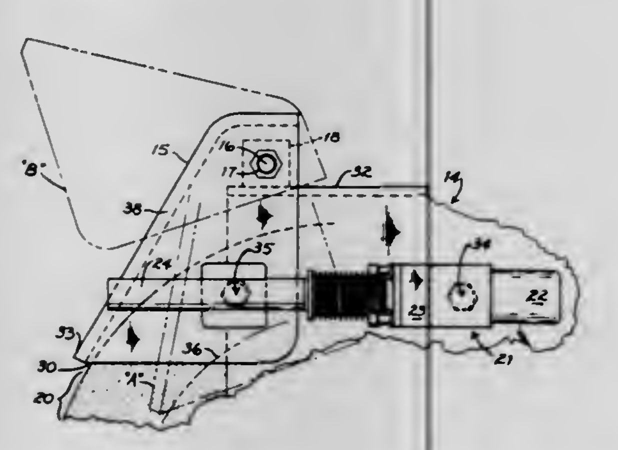

1. In a grinding machine having a wheel guard enclosing a grinding wheel, and a wheelguard hood swingable about a swing axis on said wheelguard to move said hood into close proximity with a grinding wheel circumference, an improved hood adjusting apparatus comprising:
- a. a first pivot joint on said wheelguard;
- b. a second pivot joint on said hood, distally located from said swing axis, wherein first and second pivot joint axes are parallel to said swing axis;
- c. a screw and nut system, relative rotatable, wherein said screw is axially secured to said first pivot joint and said nut is axially secured to said second pivot joint so as to provide an adjustable link connecting said pivot joints;
- d. reversible power means to provide alternate intermittent and continuous relative rotation to said screw and nut system to adjust said hood to correspond to changes in wheel diameter; and
- e. means to power said hood about said swing axis to a wheel access position wherein a grinding wheel may be interchanged with a grinding wheel spindle, without interfering with said hood adjusting apparatus.

4,060,943
METAL WORKING COMPOUND
Albert Olsin, 4129 Princeton Blvd., South Euclid, Ohio 44121
Filed Mar. 23, 1976, Ser. No. 669,686
Int. Cl.² B24B *1/00*
U.S. Cl. 51—281 R **6 Claims**

1. In a process for working a metal by contacting the metal with a working instrument and forming particles of the metal, the improvement comprising applying to at least one of said metal and instrument prior to contacting the metal with a working instrument an abrasive-free working compound consisting essentially of from 0 to about 5% by weight of a monoglyceride, from 0 to about 5% by weight of a diglyceride, and the balance substantially a triglyceride, all of said glycerides having alkyl or alkenyl moieties of from about 7 to about 17 carbon atoms, said compound being solid at room temperatures and having a melting point within the range of about 100° to about 125° F, a softening point within about 10° F of the melting point, an iodine value number no greater than about 10, and a solid fat index at 80° F within the range of about 35% to about 60%, lubricating said working of the metal by said compound which, by virtue of said properties, remains substantially at or adjacent the work area of said contact with the metal, and preventing appreciable accumulation of said metal particles on said instrument by said working compound.

4,060,944
MAINTENANCE PLATFORM FOR A BUILDING ROOF
Albert W. Sandring, Independence, Mo., assignor to Butler Manufacturing Company, Kansas City, Mo.
Filed Sept. 21, 1976, Ser. No. 725,247
Int. Cl.² E04D *13/12*
U.S. Cl. 52—43 **18 Claims**

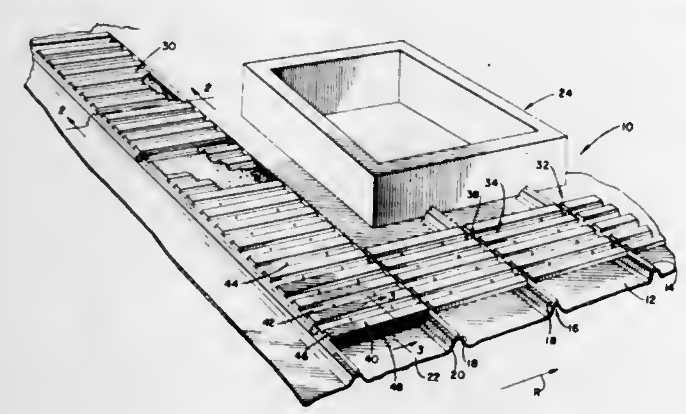

1. A maintenance platform for use on a building roof formed of a plurality of roof panels interconnected by seams, the maintenance platform comprising:
- a maintenance platform panel seated on one of the roof panels; and
- a clip securing said maintenance platform panel to a roof panel seam, said clip including an elongate tab having one end which is hooked into the seam and a U-shaped clasp having a pair of legs and a bight portion connecting said legs together, said clasp having defined therein a tab receiving slot, with the other end of said tab being received in said tab receiving slot to be hooked over one of said clasp legs to secure said clasp to the roof panel seam in a non-penetrating manner.

4,060,945
COMPOST BIN
Clifford Arthur Wilson, New Hope, Pa., assignor to Rotocrop International, Ltd., Nassau, Bahamas
Filed Apr. 12, 1976, Ser. No. 676,107
Claims priority, application United Kingdom, Sept. 24, 1975, 39174/75
Int. Cl.² E04G *11/04;* **C05F** *11/06*
U.S. Cl. 52—169.5 **18 Claims**

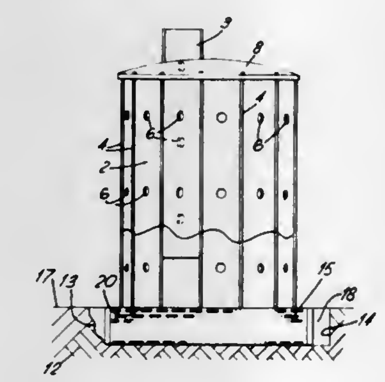

1. An improved compost bin for decomposing vegetable matter and the like, the improved compost bin being adapted to be supported on a substrate such as the earth in which a channel having a predetermined length has been cut and comprising:
- a substantially vertical bin wall including a plurality of similar panels and defining a substantially vertically disposed chamber which has an upper end and a lower end and which is used for receiving the vegetable matter and the like to be decomposed, each of the panels having a first side edge and a second side edge and being positioned, relative to the other panels, so that its first side edge is adjacent to the second side edge of one panel and so that the second side edge is adjacent to the first side edge of another panel; means for slidably interengaging the adjacent panel edges so that a panel may be selectively vertically moved, with respect to its adjacent panels, so as to permit access from outside the bin wall into the interior of the chamber; the bin wall being positioned on the substrate so that the channel underlies and is in communication with a portion of the lower end of the chamber and so that the remaining portion of the lower end of the chamber is adjacent to and in communication with the substrate on which the improved compost bin is supported, with the predetermined length of the channel being greater than the cross-sectional length of the portion of the lower end of the chamber so that air from without of the bin wall may pass through the channel and into the interior of the chamber; and a tunnel member disposed in the channel and having a perforated upwardly facing wall portion, with at least a part of the tunnel member underlying the portion of the lower end of the chamber.

4,060,946
IN-GROUND SWIMMING POOL CONSTRUCTION
Robert S. Lang, Tampa; Rodney Morris Post, Largo, and Thomas Leo Hogan, Tampa, all of Fla., assignors to L. F. Lang & Son Pools, Inc., Tampa, Fla.
Filed May 18, 1976, Ser. No. 687,537
Int. Cl.² E04H *3/18*
U.S. Cl. 52—169.7 **3 Claims**

1. In an in-ground swimming pool construction including a plastic swimming pool shell structure which is suspended from above in an earth excavation during construction and which rests on backfill in the final swimming pool construction, the shell having substantially rigid, preformed, plastic sides received in said excavation and spaced from the earth thereat, the improvement comprising:
- a plurality of ground supported beams having means suspending said pool shell structure in said excavation from above said excavation;
- a plurality of ground anchors embedded in the earth at said excavation and operatively connected to the sides of the pool shell structure in said excavation;

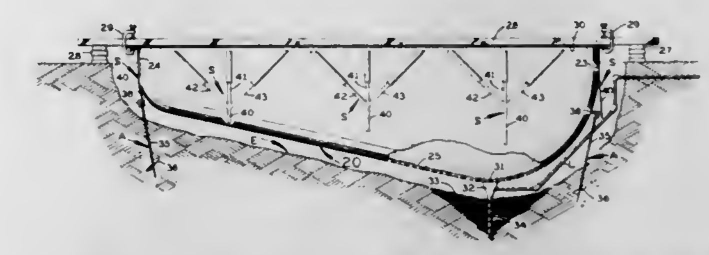

- said ground anchors including tensioning means adjustable to pretension said shell from said beams before backfill is placed in said excavation and for tensioning said shell against said backfill after said backfill has been placed in said excavation;
- said ground anchors comprising auger-type anchors each having an elongated, rod-like, rigid, central stem and a transverse anchor plate extending spirally around said stem for firmly anchoring said shell in the ground both during pre-backfill tensioning of said shell and during post-backfill tensioning of said shell.

4,060,947
FLEXIBLE NON-SKID STRIP WITH REINFORCING WEB MEMBER
Hiromitsu Naka, No. 39, Oaza Shinmachi, Yashio, Saitama, Japan
Division of Ser. No. 483,005, June 25, 1974, abandoned. This application June 1, 1976, Ser. No. 692,018
Claims priority, application Japan, July 6, 1973, 48-79785[U];July 6, 1973, 48-79786[U]; July 6, 1973, 48-79787[U]; Aug. 11, 1973, 48-94004[U]; Aug. 17, 1973, 48-96158[U]; Oct. 24, 1973,48-122792[U]; Oct. 24, 1973, 48-123793[U]; Feb. 19, 1974,49-19128; Feb. 19, 1974, 49-19129; Feb. 21, 1974, 49-20201[U]; Feb. 21, 1974, 49-20202[U]; Apr. 15, 19074, 49-41010[U]; Apr. 15, 1974, 49-41011[U]; Apr. 15, 1974, 49-41012[U]
Int. Cl.² B44D *5/08;* **E04F** *11/16;* **B44C** *1/26;* **B32B** *3/04*
U.S. Cl. 52—179 **6 Claims**

1. A flexible non-skid strip comprising:
- a main body extending along the length of said strip and adapted to be secured to the tread portion of a stair;
- a forward edge anchoring portion co-extending with said main body parallel to and spaced from said main body and adapted to be secured to the riser of said stair;
- a connection portion integrally connecting the main body and anchoring portion together and adapted to bend about the stair edge of said stair so as to cover the stair edge;
- said main body, anchoring portion and connection portion being formed of a flexible synthetic resin;
- a non-skid top surface portion on the upper surface of said main body; and
- a web member being formed of metal, having a plurality of holes therein, and having arcuate projections provided on and extending above the surface of the upperside thereof,

said arcuate projections, respectively bridging said holes and are embedded in said main body and anchoring portion, whereby said web member is integrally secured to the underside of the main body and anchoring portion.

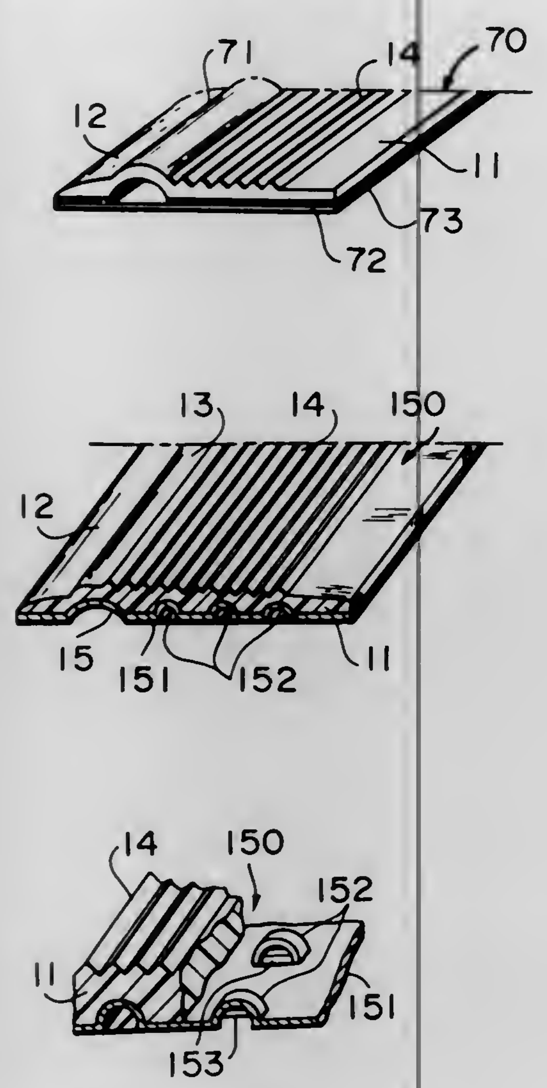

4,060,948
STRUCTURAL FRAME FOR A BUILDING
Robert O. Brownlee, 353 McDonald Ave., Mobile, Ala. 36604
Continuation-in-part of Ser. No. 394,771, Sept. 6, 1973. This application Aug. 23, 1976, Ser. No. 716,817
Int. Cl.² E04B *1/18*
U.S. Cl. 52—236.8 **6 Claims**

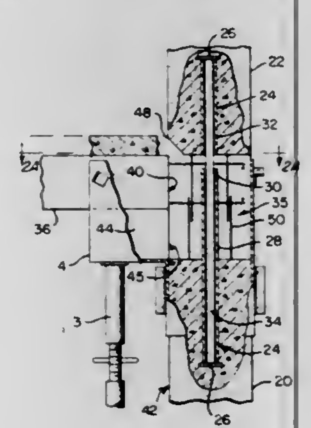

1. A structural frame constructed with preformed posts and beams connected by unitary joints formed at the construction site, said frame comprising:
upright posts disposed in superposed relation with adjacent ends thereof substantially in vertical alignment and having axial bores extending a predetermined distance into the upper and lower ends thereof;
sleeves in said bores;
a rod disposed in said sleeves and bottomed in said bores of said adjacent superposed posts and having a length sufficient to support said upper post a predetermined distance above said lower post and providing a cavity therebetween defined by the projections of the aligned walls thereof;
means removably attached to said posts for enclosing said cavity and having an aperture therein for permitting access thereto;
a uniting piece formed at the building site in said enclosing means and allowed to cure in order to form a unitary joint uniting said posts together to provide an upright column with said posts;
one or more horizontal beams having generally rectangular cross sections and having one end positioned adjacent and above the upper end of said lower post outside of said cavity and having its end surface aligned flush with the adjacent vertical side wall of said lower post; and,
wherein said uniting piece forms a unitary joint uniting said posts and beams together;
the cross-sectional area of at least one of said beams being less than the surface area of the cavity adjacent to the end surface of said beam; and,
wherein said enclosing means includes removable filler blocks having sufficient dimensions to fill the voids left in the enclosing means by the smaller beam and having their end surfaces aligned flush with the end surfaces of said beam outside said cavity.

4,060,949
DETACHABLE CONNECTOR FOR STRUCTURAL MEMBERS
Peter Busse, Vlotho, Germany, assignor to Richard Heinze, Germany
Filed Oct. 26, 1976, Ser. No. 735,425
Claims priority, application Germany, Oct. 30, 1975, 2548527
Int. Cl.² F16B *7/04*
U.S. Cl. 52—285 **17 Claims**

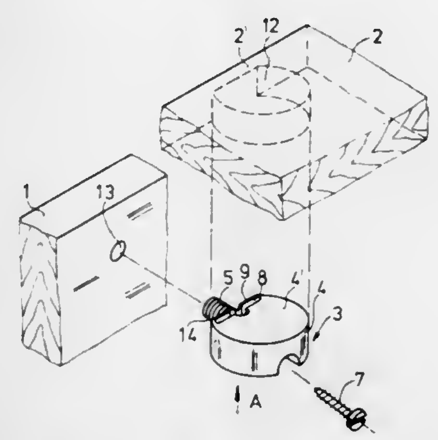

1. A fastening fitting for detachable connection of two structural members especially for two structural members butting together at right angles, for example a furniture side wall with a furniture top panel, a furniture floor, a furniture intermediate floor and so on, with a holding element which can be inserted into a hole in the first structural member and with a pin which can be inserted into a hole in the second structural member as well as with an anchoring screw which engages with an opening in said pin, wherein the pin and the holding element are connected by a compressible section, which section can be compressed at least in the direction of the anchoring screw.

4,060,950
CONCEALED CLIP FOR HOLLOW STRIPS
Troy D. Rackard, and Grover E. Snider, both of Lexington, N.C., assignors to National Gypsum Company, Buffalo, N.Y.
Filed Dec. 8, 1976, Ser. No. 748,653
Int. Cl.² E06B *3/30;* **E04C** *2/42*
U.S. Cl. 52—456 **5 Claims**

1. In combination, two intersecting hollow strips of equal cross-sectional dimensions and a concealed clip for interlocking said strips, comprising two hollow strips of equal cross-sectional dimensions each having an equilateral parallelogram cutaway portion on one face, with two sides thereof extending across the full width of said strips, and two rectangular cutaway portions adjacent to said equilateral parallelogram cutaway portion located one in each side of said strip forming an equilateral parallelogram void in each strip extending through half the thickness of said strip, leaving a remaining half thickness opposite thereto, said hollow strips being interengaged with said void of each strip engaging a said remaining half thickness of the other said strip, and a semi-rigid clip disposed within said hollow strips at the intersection formed by said interengagement of said strips, said clips having a center portion and four outwardly directed legs, two oppositely directed legs extending into two oppositely directed portions of one said hollow strip, and two other oppositely directed legs extending into two oppositely directed portions of the other hollow strip, said four outwardly directed legs being formed to urge said two hollow strips together in said interengaged relation including upwardly extending portions on two oppositely directed legs and downwardly extending portions on the two other oppositely directed legs, said upwardly extending portions having a normally upwardly extending extent and said downwardly extending portions having a normally downwardly extending extent such that when said hollow strips are placed fully together in interengaged relation said upwardly extending portions and said downwardly extending portions are still compressed and tending to urge said hollow strips tightly together.

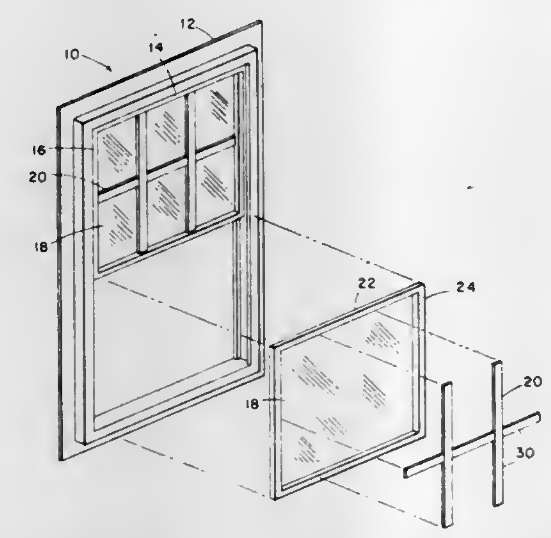

4,060,951
STRESSLESS SUSPENSION AND ANCHORING PROCESS OF STONE VENEER
Sandor Gere, 22-48 74th St., Jackson Heights, N.Y. 11370
Filed Sept. 15, 1976, Ser. No. 723,660
Int. Cl.² E04B *2/88, 1/41*
U.S. Cl. 52—508 **4 Claims**

1. A stone slab mounting comprising:
a. a stone slab having a face and an edge, a cylindrical plughole extending axially into the slab from the edge, and a bolthole perpendicular to the plughole and the face communicating with the plughole and the face;
b. a cylindrical plug having an internally threaded bore perpendicular to its axis, positioned within said plughole with the internally threaded bore of the plug in alignment with said bolthole;
c. a stud having external threads in engagement with the internally threaded bore of said plug, extending outwardly through said bolthole beyond said face of said slab;
d. a plate having a first flat surface, a second flat surface parallel to said first surface, and an internally threaded bore perpendicular to said surfaces extending from said first surface to said second surface, mounted to said stud with the internally threaded bore of said plate in engagement with the external threads of said stud, with the first surface of said plate bearing on the face of said slab;
e. a liner having a front surface and a rear surface and a through bore connecting said front surface with said rear surface, positioned on said stud with said front surface bearing on the second surface of said plate and said stud extending through said through bore, beyond the rear surface of said liner;

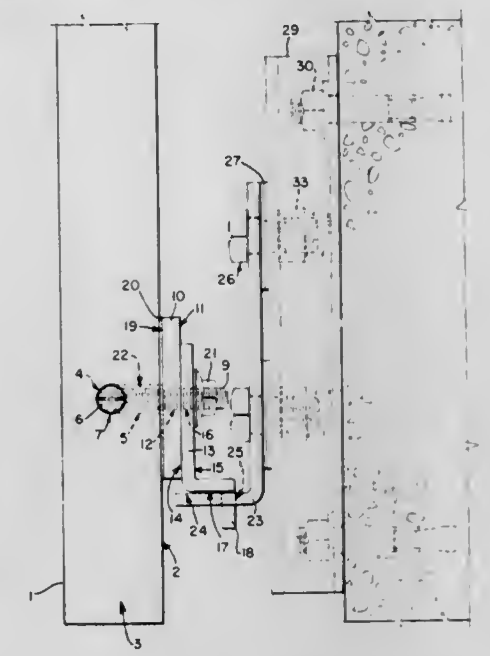

f. a nut in engagement with the external threads of said stud bearing on the rear surface of said liner to force said liner against said plate;
g. a filler material within said plughole and said bolthole, surrounding said plug and said stud to ensure even distribution of contact stresses; and
h. means for mounting said liner to a structure for transmission of loads between the slab and the structure.

4,060,952
BRICK
Gerardo Lopez Hernandez, Apartado, Postal No. 55-089, Iztapalapa, Mexico (13)
Filed May 5, 1976, Ser. No. 683,550
Int. Cl.² E04C *1/10*
U.S. Cl. 52—593 **1 Claim**

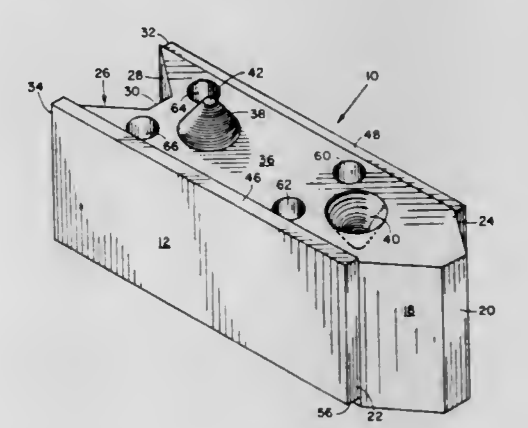

1. A brick having an oblong configuration, said brick comprising:
a pair of flat parallel surfaces;
a truncated angular extension on one end of said brick between said pair of flat parallel surfaces;
an angular recess on the end opposite said truncated angular extension of said brick between said pair of flat parallel surfaces, said angular recess being designed for receiving said truncated angular extension of an adjacent brick;
a top of said brick between said pair of flat parallel surfaces, a first end of said top having a generally conical extension thereabove and a second end having a generally conical recess therein;

a bottom of said brick between said pair of flat parallel surfaces, said bottom having a conical recess located immediately below said conical extension on the top of said brick and a conical extension in said bottom immediately below the conical recess in said top of said brick, said conical extensions and conical recesses being designed to fit conical extensions and recesses of adjacent bricks;

holes extending from said top of said brick to said bottom thereof, said holes being designed for alignment with holes of adjacent bricks;

said truncated angular extension and said angular recess extending from said top to said bottom of said brick

an upward extension of one of said pair of flat parallel surfaces above said top and a recess in the other of said pair of flat parallel surfaces below said top, said bottom having substantially identical recesses and extensions for mating with adjacent bricks; and

abutting shoulder means between said pair of flat parallel surfaces and both said truncated angular extension and said angular recess.

4,060,953
ARTIFICIAL AND NATURAL STRUCTURES
James Milne, Cumberland, England, assignor to Balfour, Beatty & Company Limited, Croydon, England
Filed Oct. 30, 1973, Ser. No. 411,038
Claims priority, application United Kingdom, Nov. 1, 1972, 50321/72; July 13, 1973, 33559/73
Int. Cl.² E02D *37/00*
U.S. Cl. 52—743 **31 Claims**

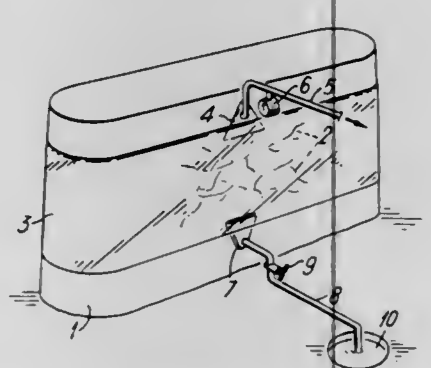

1. A method of strengthening artificial and natural structures having voids therein by introducing a hardenable material in a liquid or semi-liquid state into said voids in the structure, at least some of which voids have openings in at least one surface of the structure, which method comprises surrounding at least a part of the structure containing the voids that are to be filled by a closely fitting, flexible, fluid-impermeable shroud and sealing boundary edges of the shroud to the structure to form a substantially fluid-tight enclosure; evacuating air and any other fluid from the voids within the fluid-tight enclosure and, when the voids have been substantially evacuated, allowing the hardenable material in a liquid or semi-liquid state to enter into the evacuated voids until the hardenable material appears at said openings of voids in the surface or surfaces of the structure and allowing the hardenable material to set.

4,060,954
BAR CHAIR FOR REINFORCING RODS
James J. Liuzza, 3522 Latma, Houston, Tex. 77025
Filed Nov. 3, 1972, Ser. No. 303,604
Int. Cl.² E04C *5/20*
U.S. Cl. 52—677 **1 Claim**

1. In a bar chair for reinforcing rods, a substantially rectangular body, having a depending cylindrical leg at each corner and opposed, upstanding cylindrical studs, the lower portion of said depending legs being tubular and the upstanding studs forming guides for the reinforcing rods to be mounted on said chair, and being of a reduced diameter adapted to fit in said tubular portion of the depending legs and extend upwardly therein for vertical support, and a detachable sand plate comprising a flat base member adapted to lie on the sand bed of a concrete slab excavation, upstanding cylindrical studs on said

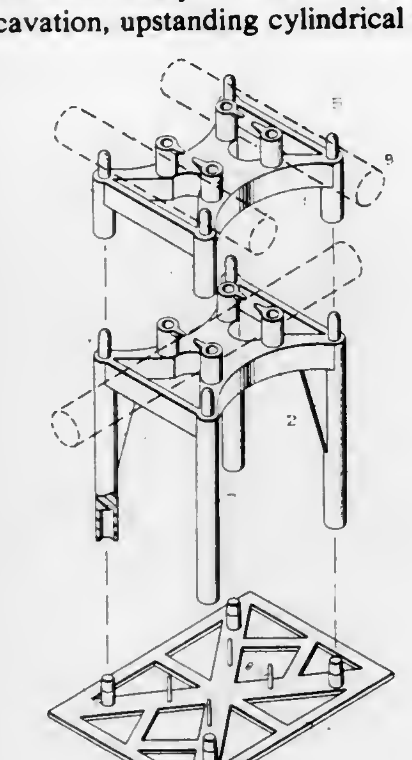

base to be received by the tubular portion of said legs of the chair.

4,060,955
MACHINE FOR MECHANICAL PRODUCTION OF BRICK MASONRY
Wolfgang Lachnit, Thalfingen, Germany, assignor to Adolf Berglein, Hannover, Germany
Filed July 29, 1975, Ser. No. 600,146
Claims priority, application Germany, July 11, 1975, 2530973
Int. Cl.² E04G *21/14*
U.S. Cl. 52—749 **15 Claims**

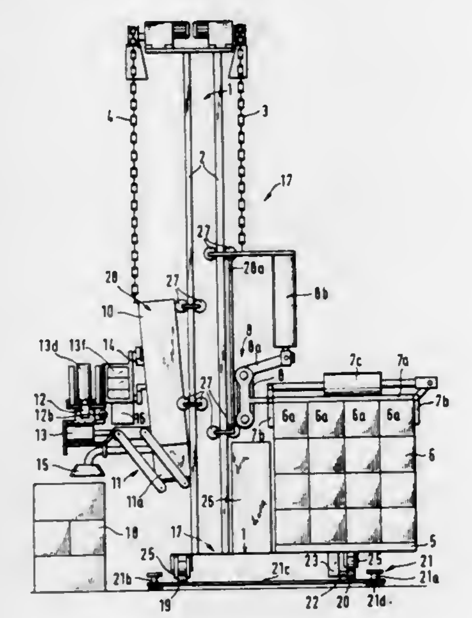

1. A machine for the mechanical production of masonry of bricks arranged in courses and in an offset manner having a carrying and guide frame adapted to move on rails along the masonry to be produced, comprising a guide frame-like carriage, on supporting rails disposed at the inside of said masonry and containing all working devices and their drives, said frame-like carriage including individual driving means for step-wise movement of said frame-like carriage on said rails and having a brick laying device at its front side and a horizontal brick storage device for stacked bricks at its rear side, and between said two devices in the center of said frame-like carriage a vertical shaft-like brick magazine, above said brick storage device a brick stack gripping and transporting device for conveying brick stacks from said brick storage device to

said vertical shaft-like brick magazine, the latter having a lower outlet for an individual brick and being open at its rearside, a supply device for an individual brick from said lower outlet of said brick magazine to said brick laying device, a turning device above said brick laying device and in cooperation therewith, a lateral movement means for said brick laying device and said turning device, and vertical guide rails and lifting means at the front side for said brick laying device, said turning device and said vertical shaft-like magazine, vertical guide rails and lifting means at the rear side for said brick storage device, said brick stack gripping and transporting device, each of all mechanical working, operating, transporting and lifting devices and means having individual drives and a common overall control device for all mechanical operating devices which is also disposed on said frame-like carriage.

4,060,956
METHOD FOR FILLING A CONTAINER WITH A LIQUID SATURATED WITH A GAS AND SEALING WHILE AVOIDING FROTHING OF THE LIQUID
Ralph W. Goble, Eldora, Colo., assignor to Bernard J. Meinerz, Evergreen, Colo., a part interest
Filed June 3, 1976, Ser. No. 692,299
Int. Cl.² B65B *31/02*
U.S. Cl. 53—22 R **6 Claims**

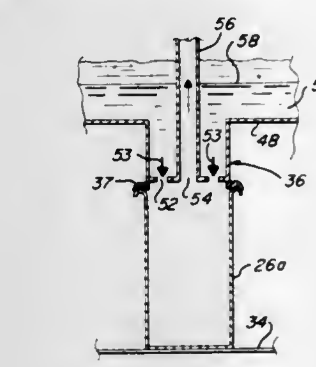

1. A method of preventing foaming and frothing of a liquid containing a gas during the introduction into and sealing of a container therefor which comprises providing a pressure tight compartment, filling a container with a liquid containing a gas at a super atmospheric pressure sufficient to substantially prevent gas bubble nucleation at a filling station within said compartment, establishing and maintaining an ambient super atmospheric pressure in the compartment substantially as great as the gas pressure in the liquid, removing the filled container from the filling station in the presence of the ambient super atmospheric pressure in the compartment which acts to substantially prevent gas bubble nucleation in the liquid, transporting the filled container from the filling station to a sealing station while maintaining the super atmospheric pressure on the liquid contents, applying a closure to the container and sealing and closing the container while under said super atmospheric pressure.

4,060,957
METHOD AND APPARATUS FOR FORMING PALLETLESS PACKAGES
Richard Birkenfeld, Beckum, and Reinhold Jaschke, Ahlen, both of Germany, assignors to Firma E. Möllers, Beckum, Germany
Filed Mar. 24, 1977, Ser. No. 780,810
Claims priority, application Germany, Apr. 3, 1976, 2614558; Jan. 22, 1977, 2702613
Int. Cl.² B65B *55/06, 35/50*
U.S. Cl. 53—26 **22 Claims**

1. A method of packaging objects in a palletless plastic foil package having cavities formed therein to receive fork arms of a lift truck, comprising the steps of stacking objects to be packaged into a plurality of layers each having the same base area and forming a stack having first and second end surfaces, placing an additional layer of objects to be packaged onto the first surface of said stack and having a base area different from the base area of said plurality of layers so that at least two recessed cavities are formed on opposite sides of said additional layer for receiving said fork arms and thus forming a completed stack, pulling a first shrink-on foil bonnet over the top of said completed stack covering said additional layer, shrinking said first bonnet onto said completed stack by application of heat, rotating said completed stack 180° so that said

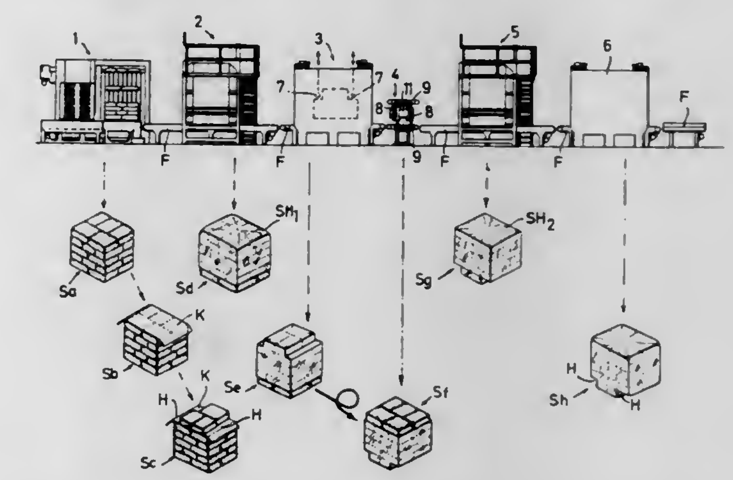

additional layer is repositioned to the bottom of said completed stack, pulling a second shrink-on foil bonnet over the completed stack covering said second end surface of said stack and overlapping with said first shrink-on foil bonnet, shrinking said second bonnet onto said completed stack and welding said first and second bonnets together at areas of overlap by the application of heat.

4,060,958
METHOD OF MANUFACTURING A PACKAGING CONTAINER
Takashi Matsui, Nara, Japan, assignor to Sekisui Kaseihin Kogyo Kabushiki Kaisha, Nara, Japan
Filed June 29, 1976, Ser. No. 700,784
Claims priority, application Japan, Apr. 15, 1976, 51-43370
Int. Cl.² B65B *5/08*
U.S. Cl. 53—37 **3 Claims**

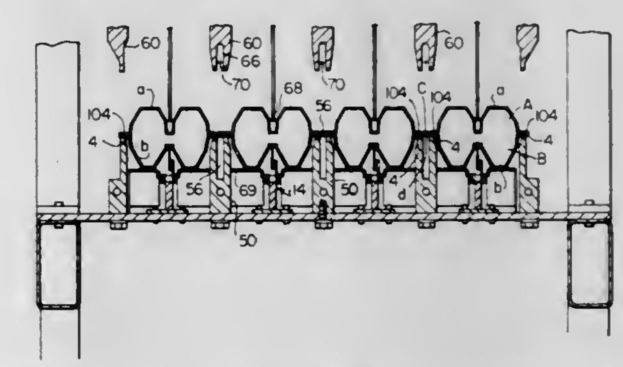

1. A method of producing a packaging container having a peelable seal which comprises steps of:

a. supplying bottom members, each made of foamed plastic sheet material and having a plurality of rectangular-shaped bottom sections series-connected at predetermined intervals, out of a stocker one by one to a conveyer;
b. placing contents in content-receiving recesses provided in said bottom sections of each of said supplied bottom member;
c. placing top members made of non-foamed plastic sheet material and having a plurality of rectangular-shaped top sections, corresponding to said plurality of rectangular-shaped bottom sections, series-connected at predetermined intervals, on said bottom members, respectively;
d. heat-sealing peripheral portions along the elongated sides of said bottom sections and top sections except for a substantially middle portion thereof with a predetermined width between adjacent assemblies of said bottom sections and top sections by abutting a heated sealing member against said peripheral portions;

e. cutting said middle portion between adjacent assemblies of said bottom section and top section by a cutting member thereby obtaining individual assemblies of said bottom and top sections; and

f. downwardly bending said peripheral portions along the heat-sealed elongated sides by lowering a bending member against said peripheral portions.

4,060,959
WRAPPER END FOLDING AND SEALING APPARATUS
Edgar F. Fiedler; Gordon A. Copas, both of Rockford, Ill., and Arthur F. Willey, Grafton, Wis., assignors to Anderson Bros. Mfg. Co., Rockford, Ill.
Filed June 29, 1976, Ser. No. 700,757
Int. Cl.[2] B65B *11/12, 51/14*
U.S. Cl. 53—373 10 Claims

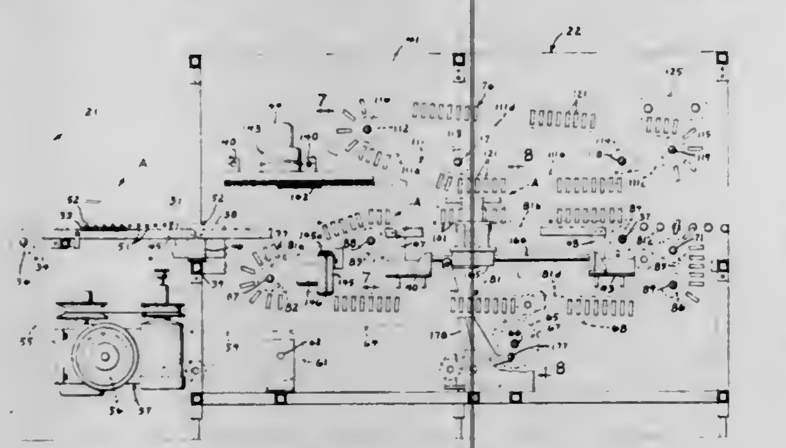

1. An apparatus for folding and sealing upper and lower end portions of a heat sealable wrapper at the end of articles as the articles are advanced comprising:

a. an endless type article conveyor having an upper run and article pusher means at a preselected pitch distance along the article conveyor for engaging the trailing side of the articles to advance the articles and wrapper in a forward direction along a generally horizontal path of travel with upper and lower end portions of the wrapper extending laterally from the article conveyor;

b. an endless type upper and lower finger conveyors disposed alongside the article conveyor, said upper and lower finger conveyors having inlet runs that converge in said forward direction at a shallow acute angle respectively from above and below said upper run of the article conveyor and forward runs extending forwardly from the respective inlet run in vertically spaced relation, the inlet runs of said upper and lower finger conveyors converging toward the upper run of the article conveyor at locations intermediate the ends thereof and offset in a direction lengthwise of the upper run of the article conveyor whereby to effect sequential folding of the end portions of the wrapper, said upper and lower finger conveyors each having a plurality of film folding fingers extending respectively downwardly and upwardly from the upper and lower finger conveyors as they move along the inlet and forward runs thereof for engaging the upper and lower end portions of the wrapper to fold the same respectively downwardly and upwardly into overlapping relation at the ends of the article, said fingers being arranged in groups at said preselected pitch distance along the respective finger conveyor means for driving the finger conveyors in timed relation with the article conveyor with the fingers at the trailing end of each group of fingers disposed forwardly of the article pusher means on the article conveyor as the article pusher means moves along the forward run of the finger conveyors and

c. wrapper seal means for sealing the overlapping upper and lower end portions of the wrapper to each other as the articles are advanced by the article conveyor past said forward runs of the finger conveyors.

4,060,960
SELF-PROPELLED CROP HARVESTER
Edward John Hengen, Bettendorf, Iowa, and Mahlon Lloyd Love, Osco, Ill., assignors to Deere & Company, Moline, Ill.
Filed Apr. 22, 1976, Ser. No. 679,344
Int. Cl.[2] A01D *45/02*
U.S. Cl. 56—14.6 49 Claims

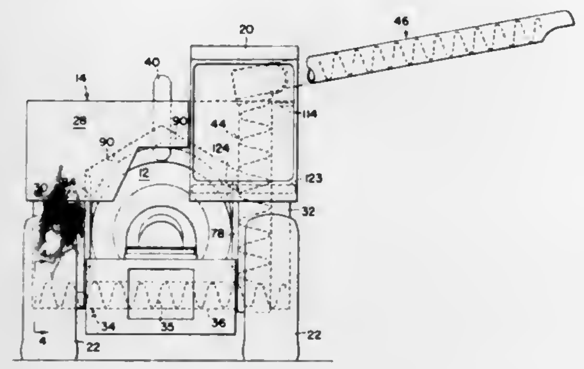

1. In a self-propelled combine adapted to advance over a field and having a plurality of wheels, an engine, an operator's station, a crop processing means and crop handling means adapted to receive crop material from the processing means, the combination therewith of a improved frame for supporting the engine, crop processing means, the crop handling means and the operator's station on the wheels and comprising:

first and second generally fore-and-aft, opposite, upright frame sides, each side including upper and lower vertically spaced, fore-and-aft frame elements, front and rear approximately upright frame elements respectively interconnecting the upper and lower frame elements and at least one diagonal element disposed between said upright elements having one end connected to an upper fore-and-aft element and its other end connected to a lower fore-and-aft element so that the frame side is in the form of a truss;

a plurality of lateral frame elements interconnecting the frame sides and including a torsion resistant tubular member rigidly connected to the frame sides at opposite connections between a diagonal and a lower element; and

means connecting the frame sides to the wheels.

4,060,961
CROP HARVESTING ROTOR
John Dale Anderson, Canton; Richard James Buller, and Allen Thomas Trego, both of Newton, all of Kans., assignors to Hesston Corporation, Hesston, Kans.
Filed Feb. 23, 1976, Ser. No. 660,613
Int. Cl.[2] A01D *55/20*
U.S. Cl. 56—294 9 Claims

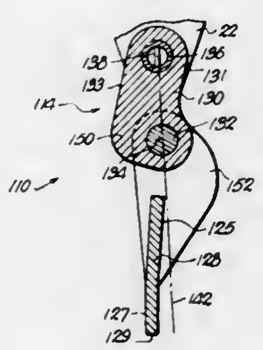

1. A rotor for harvesting crop material and the like, said rotor including:

a hub rotatable in one direction about a first axis;

a link pivotally mounted on said hub for swinging movement about a second axis extending generally parallel to said first axis;

an element pivotally secured to said link for swinging movement about a third axis spaced from said second axis in substantially parallel relationship to the latter,

said element having an outermost end,

said second and third axes being disposed in a common plane; and

means for gravitationally positioning said outermost end such that the latter is normally spaced in trailing relationship to said common plane with respect to said direction of rotation for permitting said link and element to buckle readily in response to a radially inwardly directed force on said outermost end.

4,060,962
FRUIT CLIPPER
James T. Cooper, 528 Maple Ave., Sebring, Fla. 33870
Filed June 24, 1976, Ser. No. 699,508
Int. Cl.[2] A01D *46/24*
U.S. Cl. 56—336 7 Claims

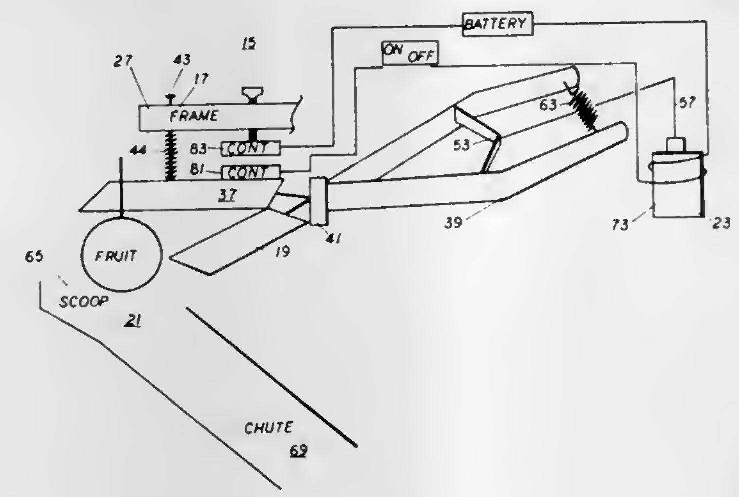

1. A fruit cutter comprising in combination:

a. a frame assembly (17) with a front end, a travel guide (31) being defined in said front end (29), side brackets (35) on said frame;

b. a plier-like cutter (20) having blades (37) which can be opened and closed with a fulcrum (41), and rear lever members (39) held on said frame, coupling means (43) coupling said cutter (20) to said travel guide so that said fulcrum can move relative to said travel guide as said blades open and close;

c. rear spring means (63) coupled to said lever members (39) biasing said lever members so that the cutter blades (37) tend to be open;

d. solenoid means with a core and coil (75, 77) coupled to said lever members (39) which when actuated will draw the core (75) into the coil (77) drawing the lever members (39) together and closing the cutter (20);

e. a circuit including contacts, connecting said solenoid means and said cutter whereby on closing of said contacts said cutter will close, cutting a fruit stem, dropping a fruit; and,

f. a scoop and chute assembly (21) held by said side brackets (35) disposed under said cutter means (20), the fruit dropping into said scoop and chute assembly when cut.

4,060,963
GUIDE TRACK ARRANGEMENT AND METHOD OF ADJUSTING THE SAME
Fritz Stahlecker, Josef-Neidhart-Str. 18, 7341 Bad Uberkingen, and Hans Stahlecker, Haldenstrasse 20, 7334 Sussen, both of Germany
Filed Apr. 12, 1976, Ser. No. 676,355
Claims priority, application Germany, Apr. 12, 1975, 2516004
Int. Cl.[2] D01H *1/16, 9/00, 16/00*
U.S. Cl. 57—1 R 48 Claims

1. A guide track arrangement for displaceably guidably mounting at least one servicing means at a spinning machine, the guide track arrangement comprising:

a supporting profile means for supporting the at least one servicing means,

a guide profile means for guiding the at least one servicing means, and

guide profile mounting means for adjustably mounting said guide profile means at said supporting profile means such that said guide profile means is adjustable at least in a direction of an occurring load at said guide profile means and said supporting profile means,

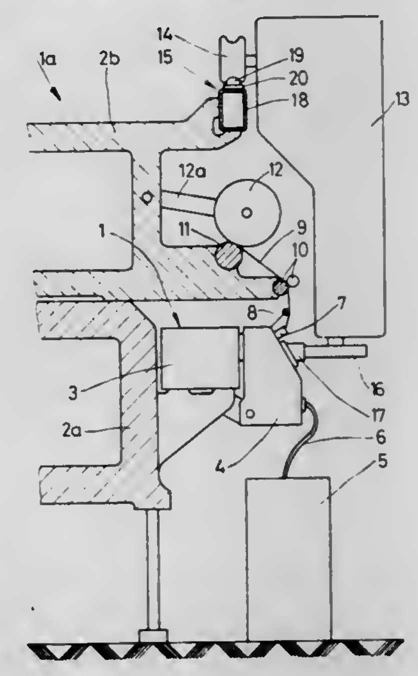

wherein said guide profile means includes a plurality of individual guide profile elements arranged side-by-side along the supporting profile means,

and wherein said guide profile mounting means includes at least one spacer means interposed between each of said guide profile sections and said supporting profile means, whereby each of said guide profile sections can be adjustably spaced with respect to said supporting profile means separately from other of said guide profile sections.

4,060,964
YARN TEXTURING MACHINE
Ronald Spencer Eaves, Chapel-en-le-Frith, England, assignor to Ernest Scragg & Sons Limited, Macclesfield, England
Filed Mar. 30, 1976, Ser. No. 672,073
Claims priority, application United Kingdom, Apr. 1, 1975, 13252/75
Int. Cl.[2] D01H *1/241, 1/28*
U.S. Cl. 57—34 HS 9 Claims

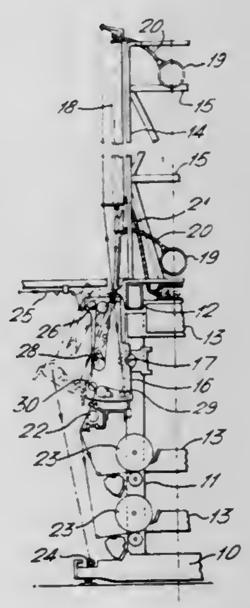

1. A machine for texturing a plurality of yarns, said machine comprising a frame having a row of processing stations; a rotatable drive shaft extending in said frame past all of said stations and carrying at each station a toothed wheel; a support

at each station displaceable between an operative position and an inoperative position; means for texturing a yarn at each station including a plurality of driven members all of which are carried on the respective support; and transmission means on each support positively interconnecting all of the respective driven members and including at least one toothed belt engaging at least some of the respective driven members, each belt being engaged with the respective toothed wheel in the operative position of the respective support and out of engagement with the respective toothed wheel in the inoperative position of the respective support, whereby all of the driven members of a texturing means are disconnected from the drive shaft on displacement of the respective support into the inoperative position.

9. A machine for texturing a plurality of yarns, said machine comprising: a frame having a row of processing stations; a single drive element extending in said frame past all of said stations; a support at each station displaceable between an operative position and an inoperative position; means for texturing a yarn at each station including a plurality of driven members all of which are carried on the respective support, one of said driven members on each supports being a pair of feed rollers and another of said driven members on each support being a pair of draw rollers, each said means for texturing including means at said station on said frame and separate from the respective support for heating the respective yarn; and transmission means on each support in intermeshing driving engagement with all of the respective driven members and including at least one coupling member in intermeshing driving engagement with at least one of the respective driven members, each coupling member being engaged with said drive element in the operative position of the respective support and out of engagement with said drive element in the inoperative position of the respective support, whereby all of the drive members of a texturing means are disconnected from the drive element on displacement of the respective support into the inoperative position.

4,060,965

METHOD AND APPARATUS TO MONITOR THREAD SPINNING OPERATION OF OPEN END SPINNING MACHINES AND EFFECTIVE THREAD STOP MOTION

Hermann Schwartz, Pfaffikon, Switzerland, assignor to Siegfried Peyer, Bach, Switzerland

Filed Oct. 8, 1976, Ser. No. 730,745

Claims priority, application Switzerland, Oct. 10, 1975, 13187/75

Int. Cl.² D01H *13/22*

U.S. Cl. 57—34 R **17 Claims**

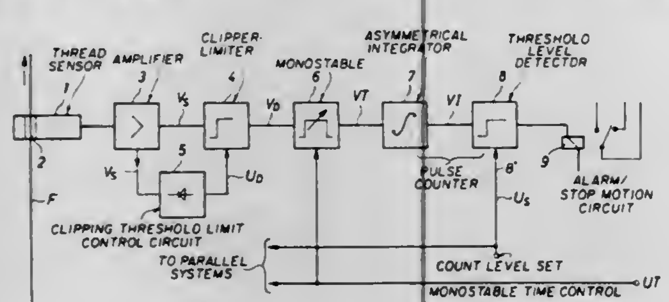

1. Method to monitor the thread spinning operation of open end spinning machines having spinning turbines comprising the steps of

generating an electrical signal (V_S) representative of thread thickness and having peaks where the thread thickness deviates from an average condition;

wave shaping said signal to provide peak signal pulses upon occurrence of said peaks, which peak signal pulses will be representative of thickened portions of the thread;

applying said peak signal pulses to a triggerable blocking circuit having a predetermined blocking time when triggered by a peak signal pulse, said blocking time being shorter than the repetition time of periodically repeating peak signal pulses which are derived from irregularities in the thread, and spaced by a distance related to the circumference of the spinning turbine to obtain output pulses from the blocking circuit which recur only if the peak signal pulses repeat periodically to retrigger the blocking circuit after its blocking time has elapsed;

adding the blocking circuit output pulses

and generating a defect signal when the addition of the blocking circuit output pulses results in a sum which exceeds a pre-determined value.

4,060,966

APPARATUS FOR SPINNING TEXTILE FIBERS

Franz Konig, Linz, Austria assignor to Dr. Ernst Fehrer Gesellschaft m. b. H. & Co., K.G. Textilmaschinenfabrik und Stahlbau, Linz, Austria

Filed Jan. 7, 1977, Ser. No. 757,589

Claims priority, application Austria, Feb. 17, 1976, 1121/76

Int. Cl.² D01H *1/12*

U.S. Cl. 57—58.89 **1 Claim**

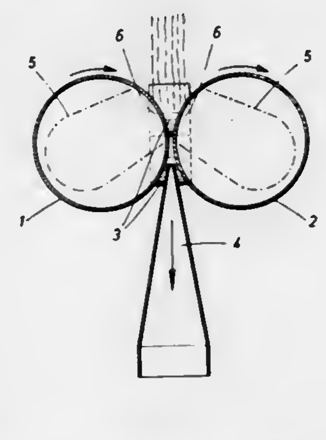

1. An apparatus for spinning textile fibers, which comprises

a. two juxtaposed drums having axes extending parallel to each other and arranged to rotate in the same sense,

1. the drums being closely spaced apart to define therebetween a throat extending parallel to said axes and two like gaps tapering towards said throat at opposite sides thereof, and

2. the drums being operable to engage flying fibers entering one of the gaps at one side of the throat and to twist the fibers together in the throat to form a twisted fiber product,

b. draw-off means arranged to withdraw the twisted fiber product from the throat in the direction of the throat, and

c. a suction duct extending into the other gap at the opposite side of the throat and having an inlet slot extending along and facing the throat.

4,060,967

FALSE TWISTERS

Hellmut Lorenz, Remscheid, Germany, assignor to Barmag Barmer Maschinenfabrik Aktiengesellschaft, Remscheid-Lennep, Germany

Filed Mar. 17, 1977, Ser. No. 778,500

Claims priority, application Germany, Mar. 20, 1976, 2612023

Int. Cl.² D01H *7/92;* **D02G** *1/06*

U.S. Cl. 57—77.45 **11 Claims**

1. A false twister comprising a false twister unit including rotating means for applying a false twist to threads running therethrough, a whorl having a vertical axis of rotation, an endless drive belt adapted to drive said whorl when the latter is in tangential contact with said belt, and characterized by said whorl being rotatably journalled on a swinging member pivotally mounted on a vertical shaft and adapted to pivot about a vertical axis, thereby shifting said whorl into and out of tangential contact with said belt, said rotating means having fixed,

constant axes of rotation providing the same path for the thread running therethrough in both S-twist and Z-twist, and

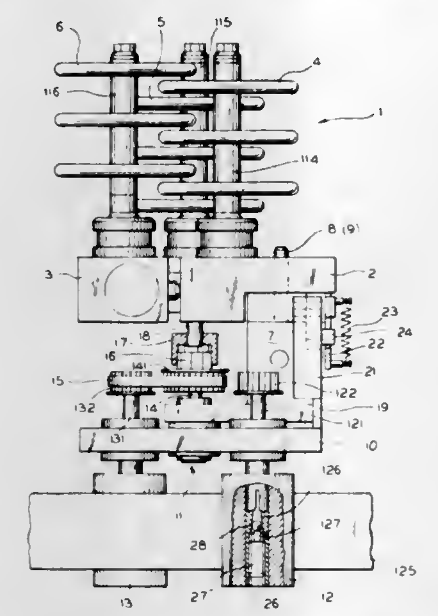

rotational drive connection means operatively connecting said whorl and said rotating means.

4,060,968

POLYESTER FIBERS HAVING WOOL-LIKE HAND AND PROCESS FOR PRODUCING SAME

Gerard Barbe, Craponne, and Andre Deyres, Venissieux, both of France, assignors to Rhone-Poulenc Textiles, Paris, France

Filed Aug. 5, 1974, Ser. No. 495,124

Claims priority, application France, Aug. 3, 1973, 73.28756; June 10, 1974, 74.20255

Disclosure was also published under second Trial Voluntary Protest Program on Mar. 9, 1976

Int. Cl.² D02G *3/00, 3/02*

U.S. Cl. 57—140 BY **10 Claims**

1. Crimped bicomponent polyester staple fibers having a hand similar to wool, good processability as staple fibers, a crimp contraction less than 60%, and at least 7 crimp half waves/cm, said fibers of 50 to 80% by weight of one component which comprises crosslinked polyethylene terephthalate having about 0.20 to 0.70 mole percent of crosslinking agent, based on the moles of terephthalate units, and having an intrinsic viscosity of about 0.45 to 0.60, and 50 to 20% by weight of the second component which comprises a sparingly crosslinked polybutylene terephthalate having about 0.20 to about 0.60 mole percent of cross-linking agent and having a viscosity in the molten state at 260°C. less than 4,000 poises.

4,060,969

FLYER FOR TWISTING MECHANISMS

Manuel Costales, and Moustafa I. Hakki, both of P.O. Box 884, Belmont, N.C. 28012

Filed June 1, 1976, Ser. No. 691,862

Int. Cl.² D01H *1/24, 7/24, 7/40*

U.S. Cl. 57—102 **29 Claims**

1. In a machine to twist material having
a. a frame,
b. delivery rolls on the frame,
c. a spindle mounted for rotation about its axis,
d. a bobbin on the spindle,
a flyer having legs mounted for rotation coaxially with the spindle,
f. carriage means interconnecting the flyer and spindle through the frame for causing relative axial movement between the flyer and spindle, and
g. said flyer being means for conducting the material from the delivery rolls to the bobbin,
h. the improved method of operation comprising the steps of:
j. preventing deflection of the legs of the flyer by
k. connecting them to a flange surrounding the bobbin,
m. journaling the flange to the frame by a base plate,
n. rotatably driving the flange, and thus
o. rotating the flyer.

4. In a machine to twist material having
a. a frame,
b. delivery rolls on the frame,
c. a spindle mounted for rotation about its axis,
d. a bobbin on the spindle,
e. a flyer mounted for rotation coaxially with the spindle,

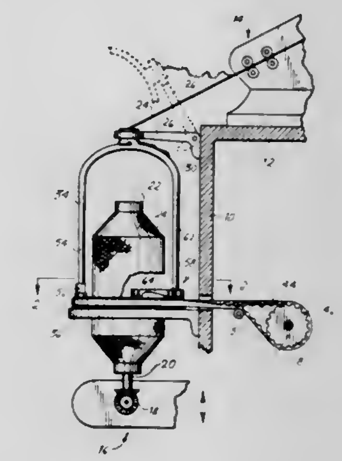

f. carriage means interconnecting the flyer and spindle through the frame for causing relative axial movement between the flyer and spindle, and
g. said flyer being means for conducting the material from the delivery rolls to the bobbin,
h. the improved structure comprising in combination:
j. a flange coaxially surrounding the bobbin,
k. the flange connected to the flyer,
m. a base plate attached to the frame,
n. a main bearing on the base plate,
o. said flange journaled to the main bearing.

4,060,970

SIMULATED SPUN-LIKE BULKED YARN

James Richard Talbot, Charlotte, N.C., assignor to Fiber Industries Inc., Charlotte, N.C.

Filed Apr. 7, 1976, Ser. No. 674,350

Int. Cl.² D02G *3/34*

U.S. Cl. 57—140 R **11 Claims**

1. A continuous filament spun-like yarn comprising a heat set stabilized multifilament synthetic yarn wherein individual filaments are longitudinally in a helical configuration with periodic reversals of extended helix direction along their length, said individual filaments additionally having torque induced kinks and twisted loops in random distribution along the length of said yarn, said yarn being held together as an integral bundle by the intermingling of the respective individual filaments.

4,060,971

SOLID STATE WATCH WITH INERTIAL SWITCH

Arthur H. O'Connor, and Robert E. McCullough, both of Lancaster, Pa., assignors to Time Computer, Inc., Lancaster, Pa.

Filed Sept. 10, 1974, Ser. No. 504,734

Int. Cl.² G04B *19/24;* **G04C** *3/00*

U.S. Cl. 58—4 A **19 Claims**

1. A solid state wristwatch comprising a watch case, an electrically insulating frame mounted in said case, and a timing module mounted on said frame, said timing module comprising

a multi-layer electrically insulating substrate, an electrically conductive circuit on opposite outer surfaces and at least one intermediate surface of said substrate, conductive means passing through said substrate and electrically interconnecting said

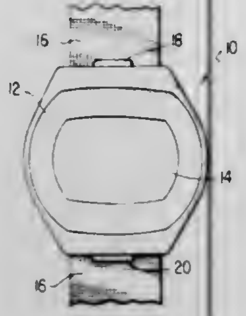

circuits, a plurality of electro-optical digital display stations on one said outer surface of said substrate, and a large scale integrated timing circuit chip on the other of said outer surfaces of said substrate.

4,060,972
DIGITAL CLOCK
Rokusaburo Kimura, Kobe, and Sadashige Horii, Shijonawate, both of Japan, assignors to Matsushita Electric Works, Ltd., Osaka, Japan
Filed Apr. 8, 1976, Ser. No. 675,160
Int. Cl.² G04B *23/00*
U.S. Cl. 58—16 D **6 Claims**

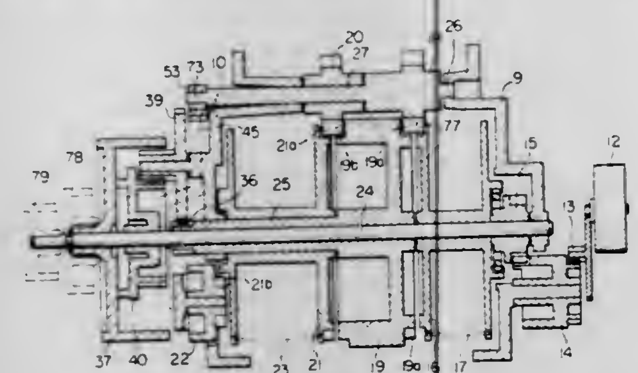

1. A digital clock comprising a pair of parallel spaced base plates, a first shaft mounted between said base plates substantially at their center for rotation about its axis.

a minutes indicating drum mounted on said shaft and rotatable therewith adjacent the inside of a first one of said base plates, said minutes indicating drum comprising a spool-shaped frame having a pair of parallel spaced circular flanges, a set of five minutes indicating cards mounted pivotally between said flanges so as to be turnable about the pivot axis, the pivot axes of said cards being located at equal distances along a circle adjacent the periphery of the flange and concentric with the rotational axis of said drum, and a gear sector on that flange which is remote from said first base plate, said first base plate being provided with a substantially circular partly cut off guide extending over the peripheral path of said cards and engaged with the ends thereof for guiding said cards as the drum rotates, said guide including a projection at least at one end of the cut-off part thereof for engaging the card and turning it over about its pivot axis as said drum rotates,

a drive motor mounted on the outside of said first base plate, reducing gear means coupling said motor with said first shaft and also with said minutes indicating drum for rotating said shaft and said minutes indicating drum intermittently at the passage of each minute,

a tens of minutes drum mounted on said first shaft for rotation independently thereof and which includes six faces each with a different ten-minute numeral thereon, said tens of minutes drum having a ring gear thereon at the side adjacent said minutes indicating drum and a gear section at the opposite side thereof,

an hours indicating drum mounted on said first shaft for rotation independently thereof between said tens of minutes indicating drum and the other of said base plates, said hours indicating drum comprising a spool-shaped frame having a pair of parallel spaced circular flanges, a set of 6 hours indicating cards mounted pivotally between said flanges so as to be turnable about the pivot axis, the pivot axes of said cards being located at equal distances along a circle adjacent the periphery of the flanges and concentric with the rotational axis of said drum and a ring gear on that flange which is adjacent said gear sector on said tens of minutes drum, the other one of said base plates being provided with a substantially circular partly cut off guide extending over the peripheral path of said cards and engaged with the ends thereof for guiding said cards as the drum rotates, said guide including a projection at least at one end of the cut-off part thereof for engaging the card and turning it over about its pivot axis as said drum rotates

a second shaft parallel to said first shaft and which is supported between said base plates for rotation about its axis, a first pinion rotatable with said second shaft and which is meshed with the gear sector on said minutes indicating drum and also with said ring gear on said tens of minutes drum for transmitting the intermittent rotation of said minutes indicating drum each ten minutes to said tens of minutes indicating drum to drive the latter, a second pinion rotatable on said second shaft and which is meshed with said gear sector on said tens of minutes indicating drum and also with said ring gear on said hours indicating drum for transmitting the intermittent rotation of said tens of minutes indicating drum each hour to said hours indicating drum to drive the latter, and

a snoozing mechanism comprising a set time indexing wheel rotatable with the elapse of time and which shifts axially when the set time is reached, an actuating member for closing a pair of electrical contacts in response to a shifting of said indexing wheel, and a locking means for temporarily locking said contacts in their open state again after said closing thereof, said tens of minutes drum including a hollow shaft by which it is mounted on said first shaft, an end of said hollow shaft being extended through said other base plate so as to transmit its rotary motion to said indexing wheel, and an end of said second shaft also being extended through said other base plate so as to transmit its rotary motion to said locking means for releasing the locking of said contacts.

4,060,973
AUTOMATIC VARIABLE-SOUND ALARM CLOCK
Dom Martino, 1 Emmalon Circle, White Plains, N.Y. 10602
Filed Apr. 2, 1976, Ser. No. 673,092
Int. Cl.² G04C *21/16*
U.S. Cl. 58—19 R **7 Claims**

1. An alarm clock comprising display means for displaying the time of day, means for representing a time of day when an alarm is to be sounded, means for generating an alarm sound when the time of day displayed on said display means corresponds to the time of day represented by said representing means, said alarm sound generating means including means for generating at least two predetermined alarm sounds having different tone contents, and means for automatically changing

the alarm sound which is generated by said alarm sound generating means at periodic intervals to control the generation of

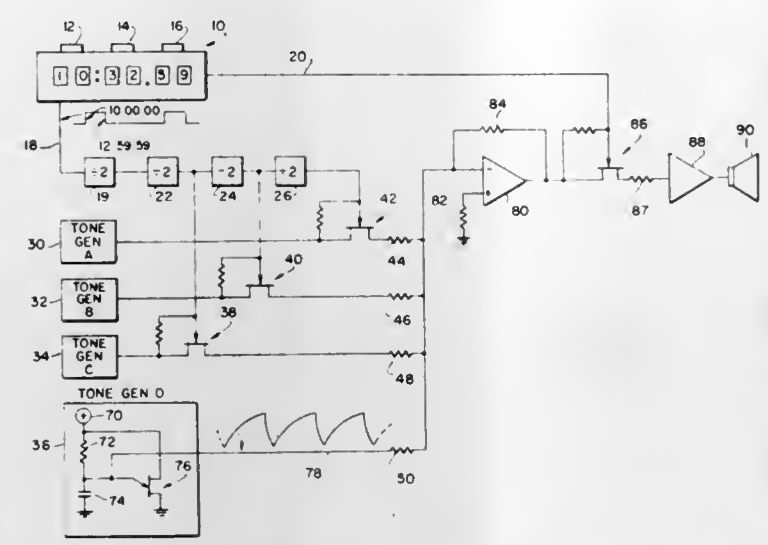

different predetermined alarm sounds when an alarm is first sounded on different days.

4,060,974
METHOD AND APPARATUS FOR DRIVING ELECTROCHROMIC DISPLAY DEVICE
Minoru Natori, Tokyo; Toshikazu Hatuse, Tanashi; Kouhei Kawanobe, Kawagoe; Hiroshi Ogawa, Tokorozawa; Fukuo Sekiya, Tokorozawa; Heihachiro Ebihara, Tokorozawa, and Misao Uchino, Tokorozawa, all of Japan, assignors to Citizen Watch Company Limited, Tokyo, Japan
Filed July 1, 1976, Ser. No. 701,971
Claims priority, application Japan, July 2, 1975, 50-81581; July 31, 1975, 50-92550; Aug. 12, 1975, 50-97934
Int. Cl.² G04C *3/00*
U.S. Cl. 58—23 R **2 Claims**

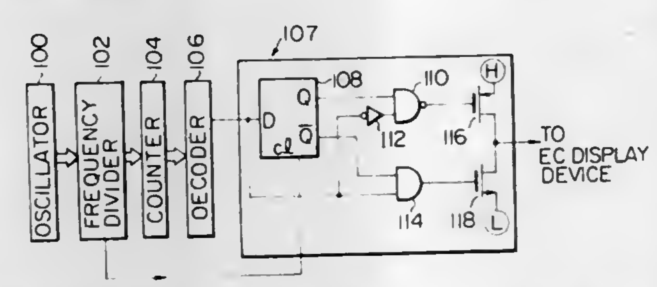

1. In an electronic timepiece having a power source, an oscillator circuit, a frequency divider coupled to the oscillator circuit, counter means coupled to an output of the frequency divider to generate clock pulse information signals, decoder means for converting the time information signals into display information signals, and an electrochromic display device having a plurality of display elements, the improvement comprising:

a latch circuit, having data and clock input terminals and Q and $\overline{Q}$ output terminals, said data input terminal is coupled to an output of said decoder means and said clock input terminal coupled to the frequency divider to receive a clock pulse therefrom, said latch circuit for storing display information signals delivered from the decoder means and generating output signals delayed for a time interval from the display information signals;

a NAND gate, having two inputs, one input coupled through an inverter to the output of said decoder means, for generating a first output pulse, in response to a falling edge of each display information signal having a pulse width;

an AND gate, having two inputs, one input coupled to said $\overline{Q}$ output of the latch circuit and the other input coupled to the output of said decoder means, for generating a second output pulse, in response to a rising edge of each display information signal having a pulse width;

a P-channel MOSFET responsive to the first output pulse to cause the flow of electric current through said display element in a bleaching direction; and

an N-channel MOSFET responsive to the second output pulse to cause the flow of electric current through said display element in a coloring direction.

4,060,975
METHOD AND APPARATUS FOR DRIVING ELECTROCHROMIC DISPLAY DEVICE
Sizuo Yamaguchi, Sayama, Japan, assignor to Citizen Watch Company Limited, Tokyo, Japan
Filed July 13, 1976, Ser. No. 704,795
Claims priority, application Japan, July 14, 1975, 50-85986
Int. Cl.² G04B *19/34*
U.S. Cl. 58—50 R **10 Claims**

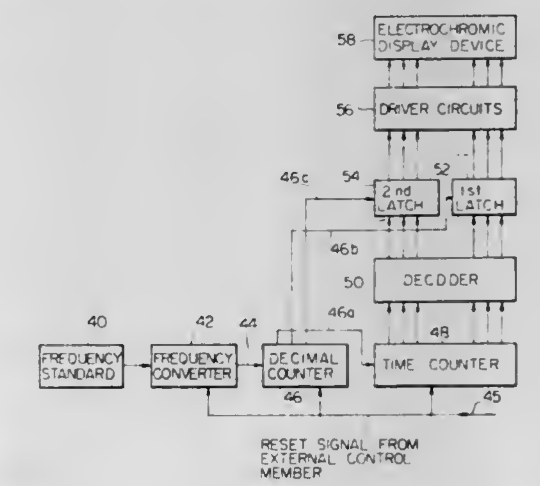

1. In an electronic timepiece having a frequency standard for providing a higher frequency signal, a frequency converter to divide the higher frequency signal down to a lower frequency signal, a time counter coupled to the frequency converter to provide time information signals in response to the lower frequency signal, a decoder coupled to the time counter for generating decoded signals in dependence on the time information signals, and an electrochromic display device having display elements for displaying the decoded signals, the combination comprising:

signal generation means coupled between the frequency converter and the time counter to generate frst, second and third phase signals in response to the lower frequency signal;

means for presetting the count value in the time counter to cuase said time counter to provide a count value signal prior to a time represented by said count value signal;

a first latch circuit coupled to the decoder and responsive to said second phase signal and said decoded signals to generate a bleaching signal for bleaching the display elements at a first timing;

a second latch circuit coupled to the decoder and responsive to said third phase signal and said decoded signals to generate a coloration signal for coloring the display elements at a second timing.

4,060,976
CALENDAR RING DRIVING WHEEL FOR TIMEPIECES
Edwin Jakob, Grenchen, Switzerland, assignor to ETA A.G. Ebauches-Fabrik, Switzerland
Filed May 10, 1976, Ser. No. 685,130
Claims priority, application Switzerland, May 16, 1975, 6345/75
Int. Cl.² G04B *19/24, 27/00*
U.S. Cl. 58—58 **7 Claims**

1. A driving wheel for advancing a toothed calendar ring of a timepiece, comprising a hub and a toothed rim having a driving tooth projecting radially beyond said rim for engaging the toothing of said calendar ring, further comprising means for connecting said hub to said rim in such a way that said rim and said hub are concentric upon advancement of said calendar

ring by said driving tooth and that said rim together with said driving tooth is displaced relative to said hub upon advancement of said calendar ring by means other than said driving tooth, said rim constantly retaining the same geometric shape.

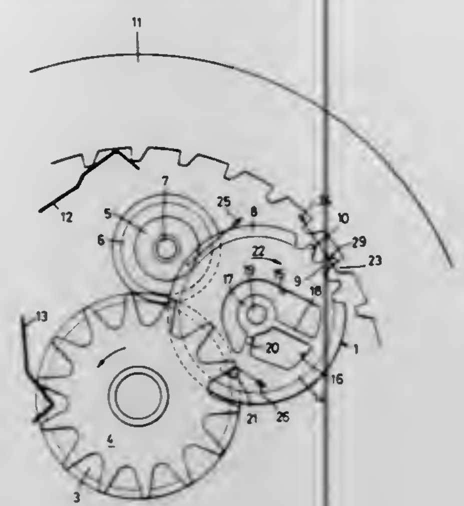

4,060,977
TIMEPIECE
Daniel Rochat, Neuchatel, Switzerland, assignor to Ebauches S.A., Switzerland
Filed Apr. 22, 1976, Ser. No. 679,473
Claims priority, application Switzerland, May 1, 1975, 5611/75
Int. Cl.^{2} G04B *27/08*
U.S. Cl. 58—85.5 **14 Claims**

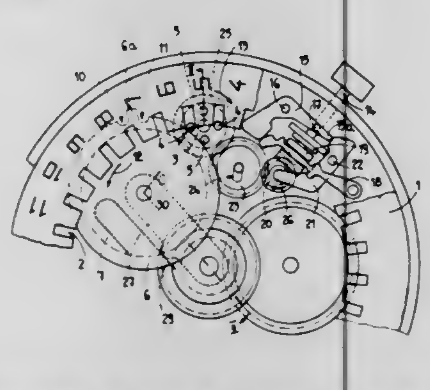

1. In a timepiece having a control mechanism including a rotatable control stem with several axial positions, at each of which it effects a different operation, a calendar mechanism including a crown-ring indicator having circumferentially spaced radial slots, a driving disc having a pair of diametrically opposed drive pins spaced from each other a distance corresponding to the distance separating the openings to said slots, a driving member rotatably driven at the rate of one revolution per 24 hour period and having means for driving said driving disc step-by-step at the rate of one step per 24 hour period, said driving disc and crown-ring indicator being disposed such that said drive pins cooperate with said radial slots so that during each step of said driving disc one of said pins drives said crown-ring indicator through one step while traveling into and out of one of said slots, said drive pins during each successive rest position of said driving disc being disposed in locking engagement within the openings to two of said slots, an improved correcting mechanism for setting said crown-ring indicator comprising means for connecting said control stem and driving disc when said control stem is in one of its axial positions, and means for mounting said driving member for movement to an inoperative position with respect to said driving disc for releasing said driving disc with respect thereto so that said driving disc can be operated by said correcting mechanism.

4,060,978
DRAG CHAIN
Robert T. McBain, Brush Prairie, Wash., and Bruce C. Johnson, Portland, Oreg., assignors to Columbia Steel Casting Co. Inc., Portland, Oreg.
Filed Feb. 24, 1977, Ser. No. 771,555
Int. Cl.^{2} F16G *13/18*
U.S. Cl. 59—78 **14 Claims**

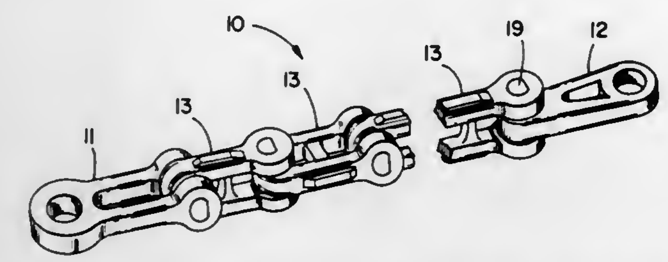

1. A chain including a plurality of serially connected links, each link comprising a yoke shaped body having a juncture at one end defining an open area, a pair of spaced apart lugs at the other end forming an open end, each lug having a pin eye, the pin eyes being aligned with one another and each including a flat surface oriented toward said other end of the link, and a link pin shaped complementarily to the pin eyes, with a flat surface from end to end on one side and of a length to extend into both pin eyes, with a pin keeper affixed to the flat surface of the pin between the lugs when the pin is assembled in the eyes to prevent escape of the pin, said main links being interconnected with the pin of each link passing through said juncture end open area of the next succeeding link.

4,060,979
STALL WARNING DETECTOR FOR GAS TURBINE ENGINE
Fred L. Elsaesser, Glastonbury, and Joseph H. Hall, East Hartford, both of Conn., assignors to United Technologies Corporation, Hartford, Conn.
Filed Nov. 19, 1975, Ser. No. 633,308
Int. Cl.^{2} F02C *9/02, 9/14*
U.S. Cl. 60—39.03 **6 Claims**

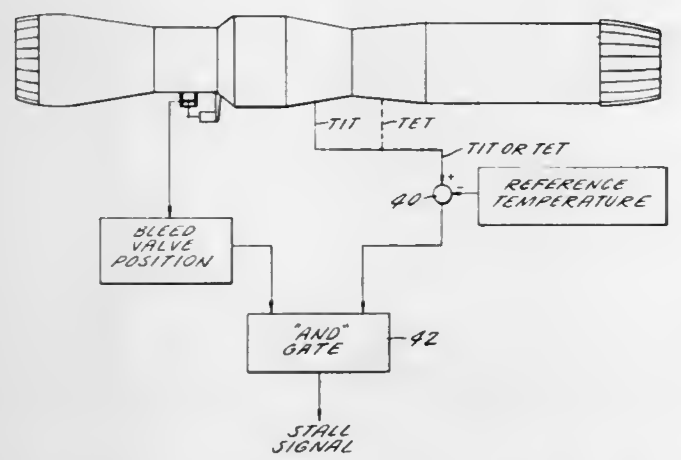

4. The method of detecting stall in flow gas turbine engine that includes a compressor, turbine and burner and compressor bleed valves comprising the steps of:
measuring the temperature in proximity to the turbine so as to produce an output signal whenever this temperature is excessive in relation to normal engine operation,
measuring the position of the compressor bleed valves so as to produce an output signal whenever the compressor bleed valves are opened,
combining the outputs obtained in the steps of measuring so as to produce a signal indicative of stall solely when both output signals are present which signal can then be used as a warning or to initiate corrective action.

4,060,980
STALL DETECTOR FOR A GAS TURBINE ENGINE
Fred L. Elsaesser, Glastonbury, and Joseph H. Hall, East Hartford, both of Conn., assignors to United Technologies Corporation, Hartford, Conn.
Filed Nov. 19, 1975, Ser. No. 633,309
Int. Cl.^{2} F02C *9/02, 9/14*
U.S. Cl. 60—39.03 **21 Claims**

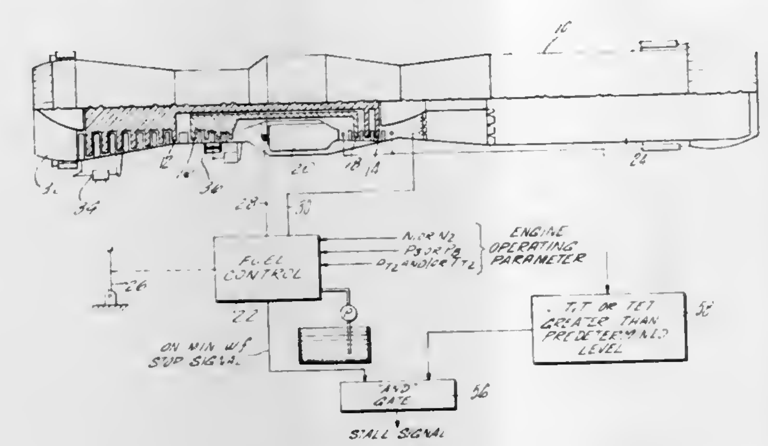

1. Stall detector for a gas turbine engine having a compressor, burner and turbine, in combination with a fuel control having a fuel metering valve regulating the flow of fuel to the burner and independent coordinating means providing a schedule for the minimum fuel flow metered by said fuel metering valve, said stall detector including means responsive to said minimum fuel flow schedule for producing a first signal whenever said fuel control is on the minimum fuel flow schedule, means responsive to another operating parameter for producing a second signal when said parameter reaches an abnormal condition of engine operation and means responsive to both said first signal and said second signal for producing a third signal indicative of stall solely when said first signal and said second signal are received.

14. The method of detecting stall in a gas turbine axial flow engine which includes a fuel control that schedules engine operation and particularly the minimum fuel flow comprising the steps of:
measuring the fuel control schedule so as to produce an output signal whenever the fuel metered to the engine is at the minimum value,
measuring a parameter other than the minimum flow schedule which parameter would be abnormal relative to engine operation when the fuel control is on the minimum flow schedule to produce an output signal when that parameter is abnormal under those circumstances,
combining both the output signals obtained in the steps of measuring to produce an output signal solely when both signals are present to indicate a stall condition which signal can be used as a warning or to initiate stall corrective action.

4,060,981
DIVERTER VALVE FOR COANNULAR FLOWS
Thomas L. Hampton, Cincinnati, Ohio, assignor to General Electric Company, Cincinnati, Ohio
Filed June 1, 1976, Ser. No. 691,314
Int. Cl.^{2} F02K *3/02*
U.S. Cl. 60—226 R **12 Claims**

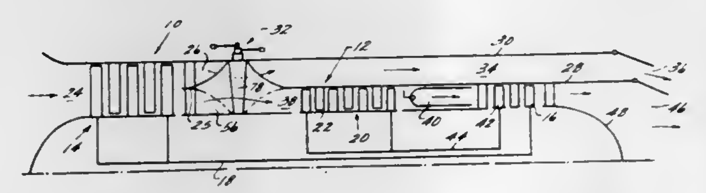

1. A valve for controlling the fluid flow between axially separated upstream and downstream sections of generally coannular inner and outer ducts, comprising:
a pair of flow mixers, one associated with each coannular duct section and each terminating in a set of flow chutes numbering *n* in amount extending substantially across and around the section annulus, alternating chutes being in fluid communciation with the inner and outer ducts of their respective sections, and wherein the chutes of each section open toward each other and are fixedly indexed circumferentially with respect to each other by 360°/2*n*,
a stage of radially extending vanes numbering 2*n* in amount, disposed between the mutually facing sets of chutes, said vanes pivotable about their longitudinal axes; and
means for actuating said vanes to selectively turn the flow exiting the chutes associated with at least one of said upstream chutes by no more than half a chute width into the chutes associated with either the inner or outer duct of the downstream section.

4,060,982
EXHAUST GAS PURIFIER FOR AN INTERNAL COMBUSTION ENGINE
Masami Konishi, and Kazumasa Futamura, both of Toyota, Japan, assignors to Toyota Jidosha Kogyo Kabushiki Kaisha, Toyota, Japan
Filed Mar. 24, 1976, Ser. No. 670,009
Claims priority, application Japan, Dec. 17, 1975, 50-149472
Int. Cl.^{2} F01N *3/10*
U.S. Cl. 60—282 **4 Claims**

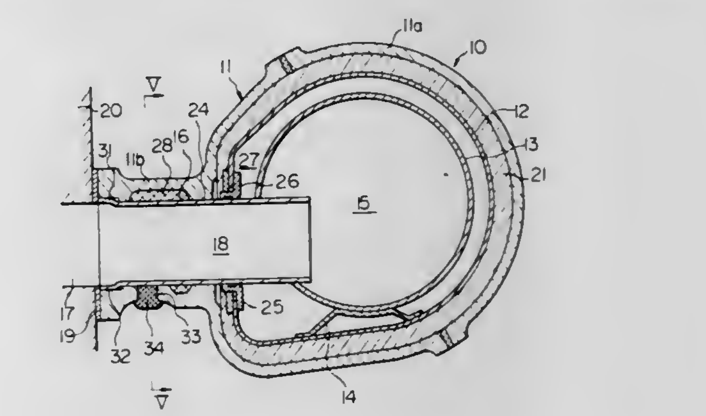

1. An exhaust gas purifier for an internal combustion engine, comprising:
a housing;
a chamber in said housing for burning unburned gas in the exhaust gas from the engine;
an inlet port liner in said housing, said inlet port liner forming an exhaust gas passage which communicates said chamber and the exhaust gas outlet opening of the cylinder head of the engine for leading the exhaust gas from the engine cylinder into said chamber, and;
an outlet port for leading the exhaust gas in said chamber to the atmosphere;
wherein the outer end of the inlet port liner is press-fitted into a portion of the inner wall of the housing adjacent one end thereof and there is an annular gap between the liner and the housing and said housing has at least one through-hole for pouring melted weld metal towards the outer peripheral surface of the inlet port liner from the outside of the housing and a weld metal is disposed in said through-hole for rigidly connecting the inlet port liner with the housing.

4,060,983
EXHAUST GAS REBURNING DEVICE
Kenji Masaki, Yokohama, and Hatuo Nagaisi, Yokosuka, both of Japan, assignors to Nissan Motor Co., Ltd., Yokohama, Japan
Filed Aug. 12, 1975, Ser. No. 603,916
Claims priority, application Japan, Aug. 13, 1974, 49-92642
Int. Cl.² F01N *3/10*
U.S. Cl. 60—282 **3 Claims**

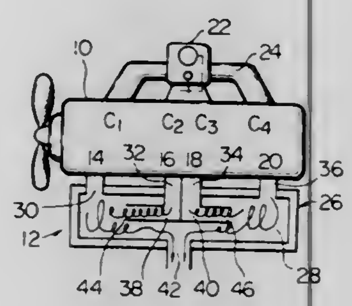

1. An exhaust gas reburning device for an internal combustion engine, comprising a reaction chamber having first, second, third and fourth inlet ports each opening into said reaction chamber to admit exhaust gas of said engine thereinto,

said second and third inlet ports being interposed between said first and fourth inlet ports and adjoining each other, first and second cylinders each located in said reaction chamber, said first cylinder being connected at one end to said second inlet port and extending at the other end toward an extension of an axis of said first inlet port in the direction of which extension said exhaust gas from said first inlet port flows into said reaction chamber to strike against exhaust gas flow from said first cylinder, said second cylinder being connected at one end to said third inlet port and extending at the other end toward an extension of an axis of said fourth inlet port in the direction of which extension said exhaust gas from said fourth inlet port flows into said reaction chamber to strike against exhaust gas flow from said second cylinder, and an outlet port opening from said reaction chamber at a nearly equal distance from said first and fourth inlet ports outside said reaction chamber.

4,060,984
AIR SWITCHING DIVERTER VALVE
Gordon R. Paddock, Rochester, N.Y., assignor to General Motors Corporation, Detroit, Mich.
Filed Oct. 22, 1976, Ser. No. 734,977
Int. Cl.² F01N *3/10*
U.S. Cl. 60—290 **4 Claims**

1. An air switching diverter valve for use with an internal combustion engine to control the flow of secondary air from an air pump to either the exhaust manifold of the engine or, to some other element associated with the engine or with the exhaust system for the engine, said air switching diverter valve including a valve housing having an inlet connectable to the air pump, a first outlet connectable to the exhaust manifold, a second outlet and a pressure valve controlled third outlet for the discharge of air above a predetermined pressure, a valve member mounted in said valve housing for movement between a first position blocking flow through said first outlet and a second position blocking flow through said second outlet, a vacuum actuated switching diaphragm assembly positioned in said valve housing and connected to said valve member and operative to effect movement of said valve member between said first position and said second position, said switching diaphragm forming with said valve housing a pressure chamber on one side thereof in communication via orifice passage means with the atmosphere and, on its other side, a vacuum chamber that is connectable to the induction system of the engine so as to be supplied with engine vacuum, a diverter timing assembly movably positioned in said vacuum chamber and attached at one end to said switching diaphragm for movement therewith, said diverter timing assembly including a housing means and a divert timing diaphragm and valve means which forms with said housing means a divert vacuum cham-

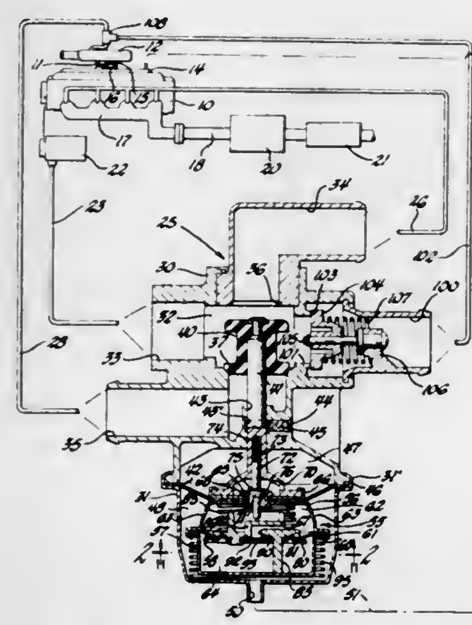

ber that is in direct communication with said vacuum chamber and a timing chamber on opposite sides of said divert timing diaphragm and valve means, said switching diaphragm having a passage means therethrough whereby to effect communication between said pressure chamber and said divert vacuum chamber, a control valve being positioned to control flow through said passage means with one end of said control valve extending into said divert vacuum chamber in position to be engaged by said divert timing diaphragm and valve means, said divert timing diaphragm and valve means being operative to effect opening of said control valve during rapid engine decelerations.

4,060,985
EXHAUST SYSTEM OF AN INTERNAL COMBUSTION ENGINE
Tsugio Fukushima, Nagahama, Japan, assignor to Yanmar Diesel Engine Co., Ltd., Osaka, Japan
Filed Mar. 11, 1976, Ser. No. 666,000
Claims priority, application Japan, Mar. 13, 1975, 50-34493[U]
Int. Cl.² F01N *5/04*
U.S. Cl. 60—319 **2 Claims**

1. An exhaust system of an internal combustion engine comprising a muffler enclosed within an engine casing and located in the path of cooling air flow for cooling the engine characterized in that said muffler is provided with an ejector connected to the outlet of said muffler and defining a convergent exhaust gas passage, and a cylindrical diffuser with its inlet arranged concentric overlapping relation to the outlet of said ejector so that an annular cooling air passage having a cross-sectional

area and an axial lapping length suitable for introducing desired volume of cooling air thereinto and with its outlet arranged with respect to an exhaust opening of the engine casing

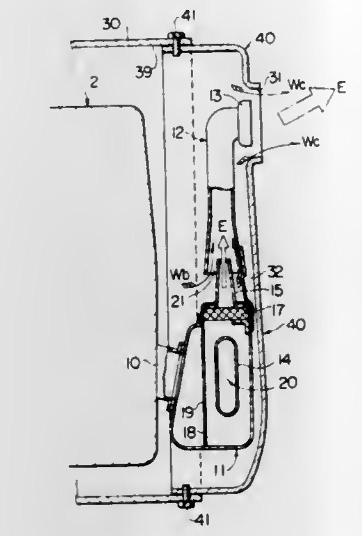

such that the mixture of the exhaust gas and the cooling air issuing from the outlet of the diffuser is further surrounded with cooling air flow, said muffler and diffuser being arranged crosswise to the general direction of the cooling air flow.

4,060,986
Patent Not Issued For This Number

4,060,987
TURBINE DRIVE SYSTEM
Shlomo Chaim Fisch, 264 Penn St., and Ichak Fisch, 266 Hooper St., both of Brooklyn, N.Y. 11211
Continuation-in-part of Ser. No. 581,819, May 29, 1975, abandoned. This application Jan. 21, 1977, Ser. No. 761,417
Int. Cl.² F15B *11/06, 11/18*
U.S. Cl. 60—409 **9 Claims**

1. A system for operating a vehicle, comprising:

a. vehicle drive means for propelling the vehicle;

b. compression means operative by said vehicle drive means for supplying a fluid under pressure;

c. storage means for receiving and storing the fluid under pressure;

d. turbine means having a vane rotor responsive to the fluid under pressure from said storage means for operating said vehicle drive means;

e. a return flow path from said turbine means to said compression means for returning the fluid to said compression means;

f. said vehicle drive means including a common drive shaft coupled to drive wheels of the vehicle, said compression means and said turbine means being coupled to said drive shaft;

g. said turbine means including a support structure defining an enclosure space, said drive shaft extending through said enclosure space and being mounted on the support structure, said enclosure space being divided into a first section and a second section substantially isolated from each other;

h. a first rotary turbine of a predetermined small radius mounted within said first section on a first portion of said drive shaft, said first turbine being rotatable within said first section;

i. a second rotary turbine of a predetermined large radius substantially larger than said predetermined small radius being mounted within said second section on a second portion of said drive shaft, said second turbine being rotatable within said second section;

j. said first and second turbines respectively being adapted for driving said common drive shaft and for working in series flow relationship with said fluid under pressure;

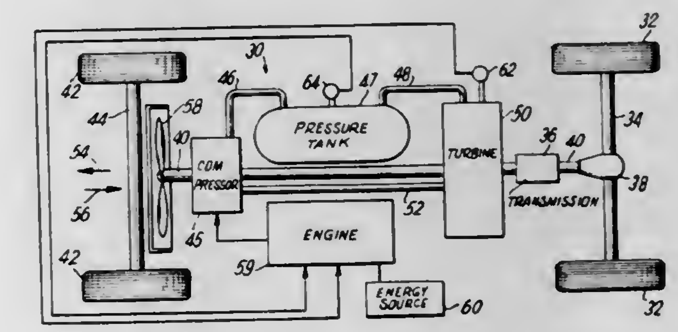

k. said support structure defining a first inlet through which said fluid under pressure can enter and drive said first rotary turbine, said support structure further defining a first outlet from said first section and a second inlet to said second section; and

l. a spiral conduit section interconnecting said first outlet and said second inlet, and said support structure defining a second outlet from said second section, whereby residual energy from the fluid from said first section is utilized in said second section.

4,060,988
PROCESS FOR HEATING A FLUID IN A GEOTHERMAL FORMATION
George B. Arnold, Houston, Tex., assignor to Texaco Inc., New York, N.Y.
Filed Apr. 21, 1975, Ser. No. 570,157
Int. Cl.² F03G *7/00*
U.S. Cl. 60—641 **26 Claims**

1. A method of heating a fluid in a brine-containing geothermal reservoir formation penetrated by an injection well and a production well which comprises:

a. introducing an organic fluid having a low solubility in water into the formation through the said injection well,

b. forcing the said organic fluid through the said formation thereby heating the said fluid,

c. recovering the said heated organic fluid substantially free

of brine through the said production well and wherein the temperature of the said geothermal reservoir formation is

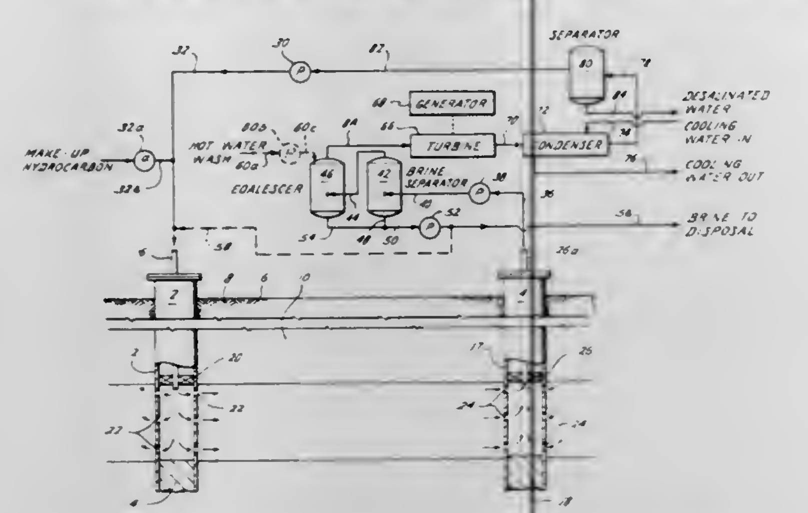

substantially above the temperature of the fluid introduced into the formation in step (a).

4,060,989
THERMODYNAMIC MACHINE WITH STEP TYPE HEAT EXCHANGERS
Michael Eskeli, 7994-41 Locke Lee, Houston, Tex. 77042
Continuation-in-part of Ser. No. 600,312, July 30, 1975, Pat. No. 3,986,361. This application Apr. 9, 1976, Ser. No. 675,304
Int. Cl.² F02C *1/04*
U.S. Cl. 60—650 **6 Claims**

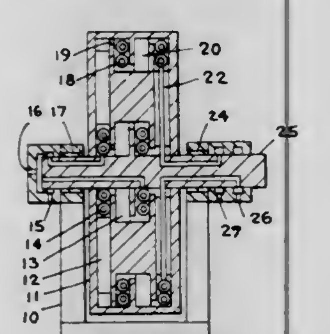

1. In a thermodynamic machine, wherein a working fluid is compressed and expanded in a cycle, with the compression being provided within an outwardly extending rotor passage, (and) the expansion is provided within an inwardly extending rotor passage, the outward ends of said passages being connected by a first passage means and the inward ends of said passages being connected by a second passage means to form a continuous fluid circulation loop, (and wherein a hot heat exchanger is provided to exchange heat with the working fluid downstream of the compression within said outward extending rotor passages,), said fluid circulation loop being provided with a heat addition heat exchanger and a heat removal heat exchanger, the improvement comprising:

a. providing said (a step type hot) heat addition heat exchanger (to exchange heat with said working fluid downstream of said compression) with heat addition steps comprising outwardly and inwardly extending passages and heat exchange means to add heat into said working fluid simultaneously with work exchange by said fluid with the rotor.

4,060,990
POWER GENERATION SYSTEM
Paul Vincent Guido, Cedar Grove; Robert Lenox Criswell, Florham Park, and Albert John Zipay, Clifton, all of N.J., assignors to Foster Wheeler Energy Corporation, Livingston, N.J.
Filed Feb. 19, 1976, Ser. No. 659,300
Int. Cl.² F01K *13/00*
U.S. Cl. 60—676 **13 Claims**

1. A power generating system comprising vapor generating means, a turbine having a relatively high pressure section and at least one relatively low pressure section, first fluid transfer means connecting said vapor generating means to said high pressure turbine section, a condenser, second fluid transfer means connecting said turbine to said condenser, third fluid

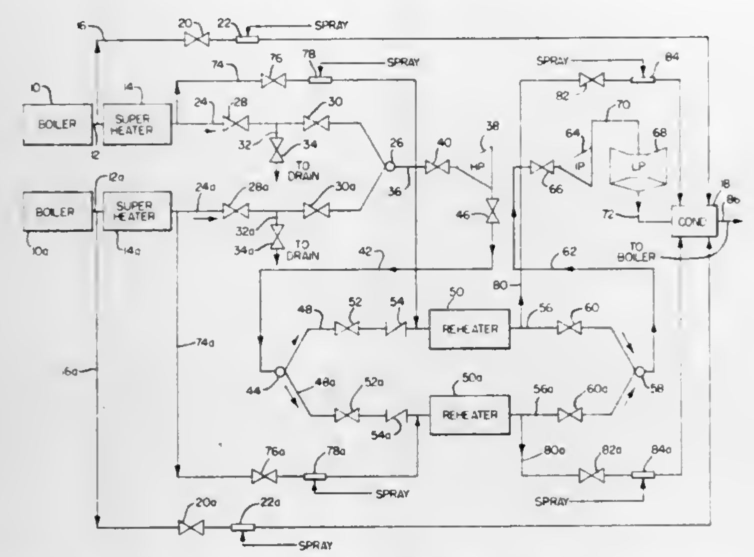

transfer means for connecting said vapor generating means directly to said condenser, at least two reheaters connected in parallel, and fourth fluid transfer means connecting each reheater between said high pressure turbine section and said low pressure turbine section.

4,060,991
SUB-SURFACE IRRIGATION METHOD AND APPARATUS
Olen Dennis Reese, 4508 Third, La Mesa, Calif. 92041
Filed Oct. 20, 1976, Ser. No. 734,299
Int. Cl.² E02B *13/02*
U.S. Cl. 61—13 **13 Claims**

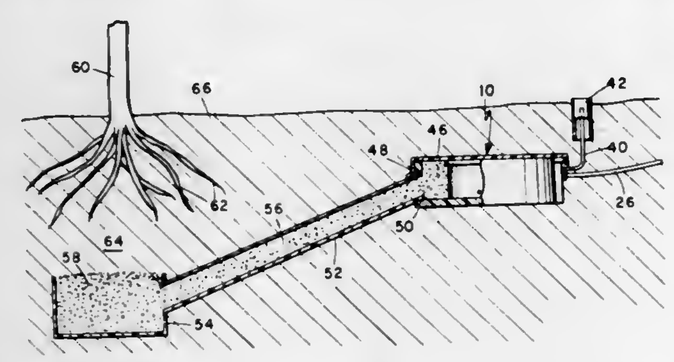

1. A sub-surface moisture distribution and control system for controlling the supply of moisture to the roots of plants comprising:

a moisture control unit, said unit comprising a vessel submerged beneath the surface of the earth, said vessel having a float chamber and a water reservoir surrounding and communicating with the float chamber;

an inlet to said float chamber for connecting to a source of water;

valve means responsive to the level of water in said float chamber for controlling the communication of water to said vessel;

air vent means for venting said float chamber to atmosphere for preventing vapor lock of said unit; and

moisture conducting means for conducting moisture from said water reservoir to plant roots remotely spaced laterally from said moisture control unit;

said moisture conducing means comprises a body of porous material having a higher porousity than the surrounding earth formation and disposed in conduit means having at lest impervious bottom and side walls, and one portion of said conducting means in intimate communication with water flowing from said float valve chamber and extending to a moisture pit adjacent to the roots of aplant for conveying moisture thereto.

4,060,992
METHOD OF AND APPARATUS FOR LAYING A PIPE-LINE
Herbert Heitkamp, Lutkeheide, and Heinz Hüsemann, Grevinghof, both of Germany, assignors to Gewerkschaft Eisenhutte Westfalia, Altluenen, Germany
Filed Apr. 30, 1976, Ser. No. 682,065
Claims priority, application Germany, Apr. 30, 1975, 2519210
Int. Cl.² E02D *5/02*
U.S. Cl. 61—41 A **11 Claims**

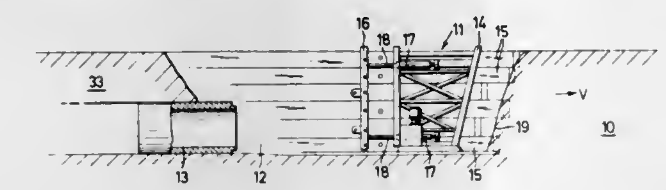

1. In an apparatus for use in driving a trench and for installing a pipe-line which is composed of pipe sections arranged end-to-end, said apparatus including an advanceable shield for excavating an open trench for receiving the individual pipe sections, the shield having a front frame which guides and supports a plurality of elongated members which themselves support the walls of the trench, the shield having a rear frame which is selectively locked to individual elongated members, ram means acting between the two frames for moving the rear frame relative to the front frame to cause selected elongated members to be moved forward lengthwise of the trench, the improvement therein comprising: thrust means for urging the forward-most pipe section rearwardly into telescopic engagement with the pipe-line, said thrust means coupled to and extending rearwardly from said rear frame, said thrust means including at least one thrust member selectively movable between a working position in lengthwise alignment with and abutment against the forward rim of the forward-most pipe section, and a storage position out of lengthwise alignment with and removed from abutment against the forward rim of the forward-most pipe section.

4,060,993
WATER SEAL PACKING FOR SEALING WATER AT THE COUPLING PORTION OF UNDERWATER STRUCTURES
Soichiro Shimizu, Tokyo, Japan, assignor to Tokyo Fabric Kogyo Kabushiki Kaisha, Tokyo, Japan
Filed Dec. 13, 1976, Ser. No. 749,896
Claims priority, application Japan, Mar. 8, 1976, 51-26449[U]
Int. Cl.² E02D *25/00;* **F16L** *49/00*
U.S. Cl. 61—43 **3 Claims**

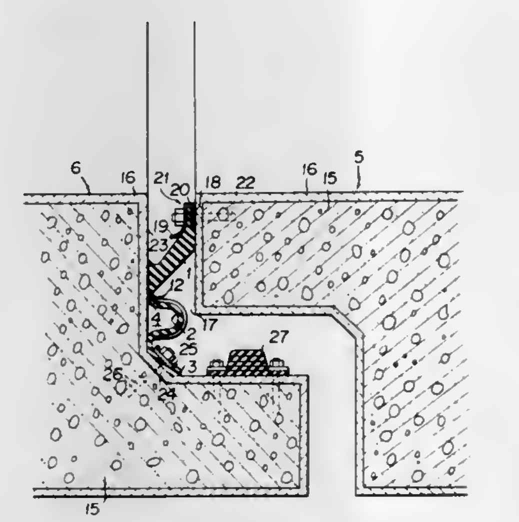

1. A water seal packing for sealing water at the coupling portion of under water structures comprising first and second structures, each being disposed oppositely at the end thereof; said water seal packing comprising an intermediate body portion having a sliding surface at one end thereof, said intermediate body portion being disposed for inclination relative to the underwater structures and being bendable at a base end thereof; a first flange portion formed integrally with said intermediate body portion at the base end thereof, said first flange portion being fixedly secured to said first under water structure; a flexible U-shaped portion formed integrally with said intermediate body portion at the other end thereof adjacent to the sliding surface, said U-shaped portion having a plurality of wave-shaped sections or ridges formed thereon in a space apart relationship; and a second flange portion formed integrally with said U-shaped portion on the side opposite to said intermediate body portion, said second flange portion being fixedly secured to said second underwater structure wherein the sliding surface of said intermediate body portion is adapted to slide freely on the surface of said second structure.

4,060,994
PROCESS FOR PROVIDING A FOUNDATION PILE FOR ALTERNATING COMPRESSIVE AND TRACTIVE STRESSES AND A PILE THUS PROVIDED
Wolf Chitis, Naples, Italy, assignor to Fondedile S.p.A., Naples, Italy
Filed Nov. 5, 1976, Ser. No. 739,084
Claims priority, application Italy, Nov. 11, 1975, 40427/75
Int. Cl.² E02D *5/44*
U.S. Cl. 61—53.6 **6 Claims**

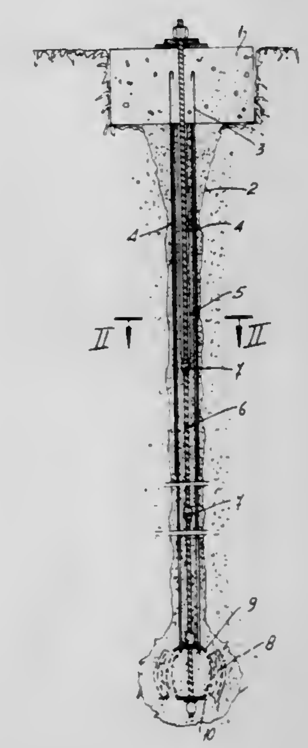

1. A process for providing a foundation pile for alternating compressive and tractive stresses, comprising the steps of forming a bore in the ground, inserting in said bore an assembly of reinforcement bars, the lower end of which has secured thereto a chamber comprising two nearly flat discs vertically spaced apart from each other by a substantial distance, a perforated generally cylindrical and rupturable side wall extending between said discs and externally thereof an impervious coating, said assembly including at least two tubes extending into said chamber, casting concrete about said assembly and allowing it to set, whereupon injecting grout through at least one of said tubes into said chamber at such a pressure that the side walls of the chamber will break and the grout will expand laterally into the ground, then after a determined period, scavenging the chamber and then repeating said injections and scavenging until the volume taken up by the injections is minimized.

4,060,995

IMMERSION OF AN OFFSHORE WEIGHT-STRUCTURE HAVING TWO COMPARTMENTS

Roger Lacroix, Paris Cedex, and Claude Lepere, Boulogne-sur-Seine, both of France, assignors to Sea Tank Co. S.A., Rungis Cede, France

Filed Mar. 22, 1976, Ser. No. 669,458

Claims priority, application France, Mar. 26, 1975, 75.09509

Int. Cl.^{2} E02B *17/00*

U.S. Cl. 61—92 **10 Claims**

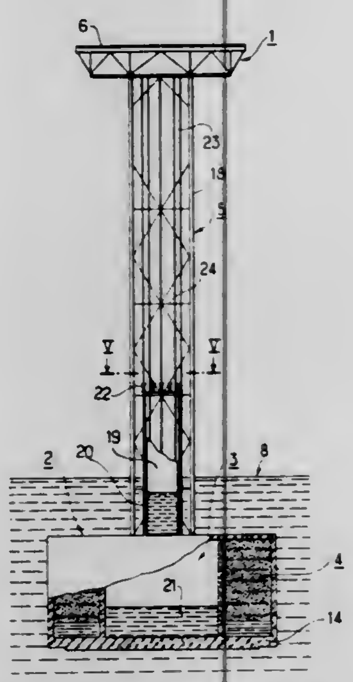

1. A method of immersing an offshore structure which includes a self-resistant base, a multitubular pylon fixed to the base and having guiding bars extending lengthwise thereof a working area installed on the pylon, an auxiliary hollow float mounted on the pylon and jack means for releasably clamping the float to the guiding bars for varying the relative positions of the base and the float, and wherein the base comprises a central multicellular compartment and a peripheral multicellular compartment the interior of which is adapted to communicte with the surrounding water as well as with a source of pressure fluid compensating for the pressure of the surrounding water, the method comprising:

a. initiating immersion of the base by partially filling the central compartment with liquid; and

b. thereafter continuing immersion of the base by admitting additional liquid into the central compartment, lowering the base relative to the float by clamping the float to the guiding bars and pumping liquid from the central compartment into the float, the pumping permitting the load on the jack means to be restricted at a substantially constant draft whereby the jack means is usable to great depths.

4,060,996

VUILLEUMIER CYCLE THERMAL COMPRESSOR AIR CONDITIONER SYSTEM

Charles M. Hanson, Springfield, Va., assignor to The United States of America as represented by the Secretary of the Army, Washington, D.C.

Filed Dec. 16, 1976, Ser. No. 751,295

Int. Cl.^{2} F25B *9/00*

U.S. Cl. 62—6 **4 Claims**

1. A Vuilleumier cycle thermal compressor air conditioner system comprising:

a hot exhaust heat source and heat exchanger in intimate contact with the hot volume of a Vuilleumier compressor hot cylinder,

a rotational input device connected to a crankshaft in a crankcase volume that is on the opposite side of a regenerator matrix displacer from said hot volume, wherein a displacer rod is connected between said displacer and an outer point on said crankshaft to impart reciprocal motion to said regenerator matrix displacer and produce alternate high and low pressure waves corresponding to alternate hot and cold temperatures in said crankcase volume; and

a cold finger array comprised of a plurality of free-displacer regenerator matrix refrigerators that are in communication with and are driven by said alternate high and low

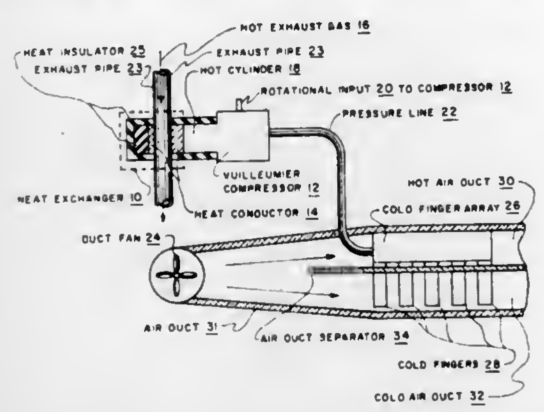

pressure waves, said refrigerators having a cold volume end position in a cold air duct and an ambient volume that is in direct communication with said pressure waves and a pneumatic volume positioned in a hot air duct wherein a duct fan vents air through said hot and cold air ducts to selectively air condition an enclosed space.

4,060,997

WATER CHILLER CONTROL

Gilbert F. Shultz, Novi, and Ronald W. Bailey, Westland, both of Mich., assignors to Application Engineering Corporation, Elk Grove Village, Ill.

Filed Mar. 31, 1976, Ser. No. 672,255

Int. Cl.^{2} F25D *17/02*

U.S. Cl. 62—180 **16 Claims**

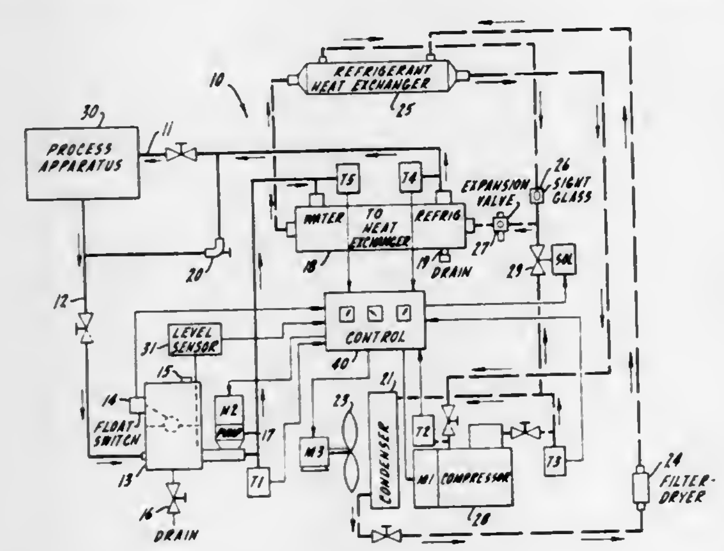

1. In a water chiller comprising:

a principal heat exchanger having first and second separate fluid paths extending therethrough in heat-exchanging relationship;

pump means for circulating process fluid through a process fluid path including, in series, a process apparatus and the first heat exchanger path;

and compressor means for circulating a refrigerant fluid through a refrigerant path including, in series, a condenser and the second heat exchanger path;

a control system comprising:

a process fluid pressure sensor, connected to the process fluid path, for developing an electrical process fluid pressure signal having an amplitude indicative of the pressure at a given point in the process fluid path;

a process fluid pressure reference circuit for developing a reference signal of preset amplitude representative of a predetermined pressure;

process fluid pressure comparator means for comparing the process fluid pressure signal and the reference signal to develop a process fluid pressure cut-off signal indicative of a deviation of the process fluid pressure in a given sense from the predetermined pressure;

and control circuit means, coupled to the process fluid pressure comparator means and to the pump means, for deactivating the pump means in response to the process fluid pressure cut-off signal.

4,060,998

PORTION CONTROLLED FROZEN FOOD

Vincent E. Bernard, Richardson, Tex., assignor to The Jimmy Dean Meat Company, Inc., Dallas, Tex.

Continuation-in-part of Ser. No. 526,146, Nov. 22, 1974, abandoned. This application Nov. 19, 1975, Ser. No. 633,481

Int. Cl.^{2} F25C *5/02*

U.S. Cl. 62—320 **11 Claims**

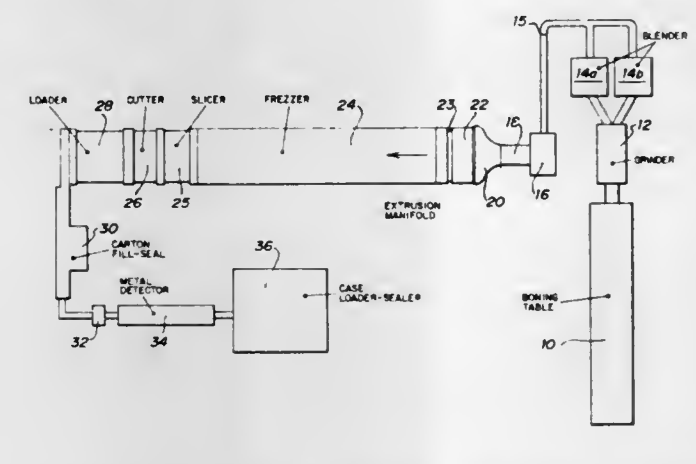

1. A system for forming a plurality of discrete products having preselected volumes and weights comprising:

means for receiving a quantity of semi-fluid material,

a pump for pumping said material at a selected rate,

an extruder associated with said pump and having an inlet to receive said pumped material and having an outlet for outputting said pumped material,

conduits connected to said outlet for conveying a continuous uniform thickness sheet of said material,

a chilling station located at the remote end of said conduit for receiving said continuous sheet of said material and for chilling said continuous sheet to an extent that said sheet maintains its extruded cross-section,

a plurality of equally spaced parallel rotatable cutting disks located at the outlet of said chilling station for continuously slicing said chilled sheet into continuous lengths and means for periodically severing the continuous lengths to form a plurality of products having the preselected volume and weight, said means for severing including an elongated cutting blade disposed above and normal or said continuous lengths, and

means for moving said blade downwardly for simultaneously severing all of said continuous lengths while moving said blade in the direction of travel of said continuous lengths and at the same speed of travel of said continuous lengths.

3. A system for forming a plurality of discrete products having preselected weights comprising:

a hopper for receiving a quantity of warm semi-fluid material,

a feed line,

a pump for pumping said material through said feed line at a selected rate and pressure,

an extruder manifold having an inlet connected at the end of said feed line and including an outlet with a smaller dimension than said inlet,

a flexible conduit extending from said manifold outlet and including an end nozzle to form a continuous extruded sheet of material,

a metering pump mounted in series with said flexible conduit to meter the flow of said material therethrough,

a chilling chamber mounted adjacent said end nozzle,

a conveyor for receiving said continuous sheet from said end nozzle and for carrying said continuous sheet through said chilling chamber to chill and firm said continuous sheet,

a plurality of rotatable slicing disks, each said disk having a cutting edge along the circumference thereof and mounted at the outlet of said chilling chamber for slicing said continuous sheet into parallel continuous lengths of equal widths, and

a cutting blade mounted downstream of said slicing disks and movable in synchronism with said conveyor for severing said continuous lengths to form a plurality of discrete products having the selected weight.

4,060,999

METHOD AND APPARATUS FOR FORMING YARN ELEMENTS AND PRODUCING PRODUCTS THEREFROM

Ronald H. Marks; Paul D. Marks, and Lawrence R. Goodman, all of Dallas, Tex., assignors to Enterprise Incorporated, Dallas, Tex.

Filed Nov. 5, 1974, Ser. No. 521,037

Int. Cl.^{2} D04B *3/06, 15/48, 27/10, 35/00*

U.S. Cl. 66—125 A **11 Claims**

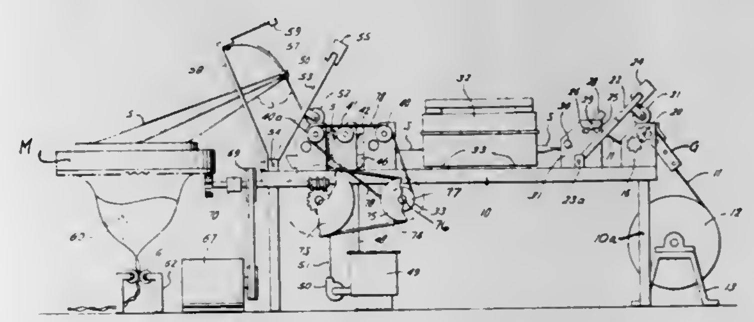

1. An apparatus for forming yarn elements including,

a supply roll of thermoplastic web material which is a relatively thin film and which is easily distorted when unequal pulling forces are applied to the web in a direction longitudinally of the web,

a set of rotatable holding rollers engageable with the web material,

at least one of said holding rollers being located beneath the web material and another of said holding rollers being located above the web material with both of the rollers extending completely across the web material and applying equal holding force to said web material throughout its entire transverse width,

a set of rotatable pulling rollers,

a cutter assembly between the holding rollers and the pulling rollers,

means for conducting the web material to said holding rollers,

means for directing said web material through the cutter assembly to cut the web into strips,

a heater forming a heating zone located between the cutter assembly and the pulling rollers, whereby the strips pass through said heater to soften the same,

means forming part of the heater for preventing the edges of the strips from fusing to each other as they pass through the heating zone, and

means for operating the holding rollers at a slower rotative speed than the pulling rollers, whereby said pulling rollers pull the web material through the cutter assembly and heater and simultaneously exert a pulling force upon the softened strips to elongate the strips and reduce their width.

4,061,000

BELT DRIVE ARRANGEMENT FOR AGITATOR WASHER MECHANISM

James W. Jacobs, Dayton, Ohio, assignor to General Motors Corporation, Detroit, Mich.

Filed June 21, 1976, Ser. No. 697,942

Int. Cl.[2] D06F *13/02*

U.S. Cl. 68—23.7 5 Claims

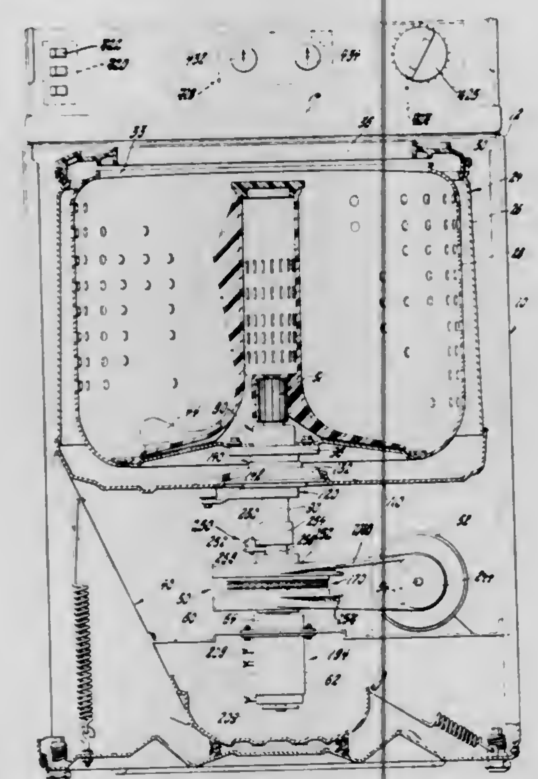

1. In a washing machine, a tub, an agitator in said tub, means for rotatably supporting said tub, a double-ended reversible power drive shaft, and power transmitting means drivingly connecting said drive shaft to said tub for rotating said tub and to said agitator for oscillating said agitator, said power transmitting means comprising first and second concentrically arranged driven pulleys rotatably carried in fixed respective planes with respect to said agitator and said tub, drive belt means encircling said driven pulleys and opposite ends of said drive shaft, clutch means for drivingly rotating said agitator relative to either of said driven pulleys, said clutch means being selectively operable to effect a driving relationship first between said drive shaft and one of said driven pulleys and then between said drive shaft and the other of said driven pulleys when said drive shaft is operating through said belt means to rotate said driven pulleys in opposite directions, and means for actuating said clutch means in a continuously repetitive pulsating manner to effect the back and forth oscillation of said agitator in said tub.

4,061,001

DEVICE FOR THE APPLICATION OF FOAM ON TEXTILE WEBS

Hans-Ulrich von der Eltz, Frankfurt am Main; Erich Feess, Hofheim, Taunus, and Siegfried Glander, Bad Soden, Taunus, all of Germany, assignors to Hoechst Aktiengesellschaft, Frankfurt am Main, Germany

Filed May 21, 1976, Ser. No. 688,896

Claims priority, application Germany, May 24, 1975, 2523062

Int. Cl.[2] D06B *1/08*

U.S. Cl. 68—200 5 Claims

5. A device for the application of a liquid treating bath in the form of a foam onto flat textile materials comprising, a liquid storage vessel, mixing chamber means communicating with said storage vessel to receive liquid therefrom, means for forming foam from said liquid in said mixing chamber, a foam distributing chamber associated with said mixing chamber for receiving foam therefrom and including an open lower end, a doctor blade mounted on said distributing chamber along said lower end thereof, a plurality of laterally staggered vertically spaced overlapping baffle plates mounted in said distributing chamber above said lower end for receiving foam from the mixing chamber and distributing the foam within the distributing chamber; means in said distributing chamber for defining a variably dimensioned foam discharge opening at said lower

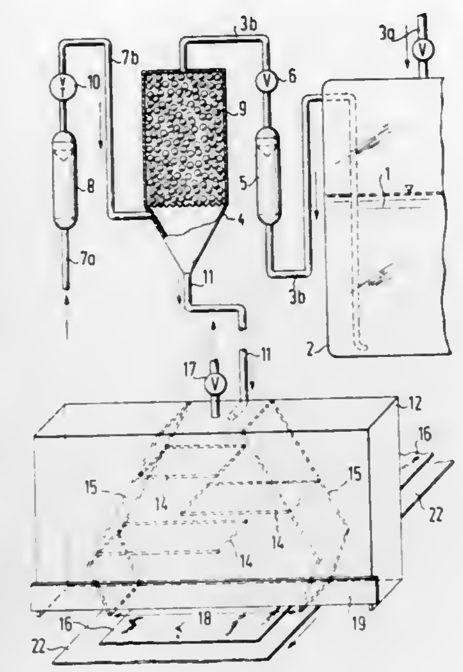

open end of the distributing chamber; and means located below said discharge opening for supporting and transporting a textile web below said foam discharge opening to allow application of foam to the web.

4,061,002

MOTOR SHIELD FOR APPLIANCE

Reinhold Alvin Drews, Stevensville, Mich., assignor to Whirlpool Corporation, Benton Harbor, Mich.

Filed Mar. 25, 1976, Ser. No. 670,119

Int. Cl.[2] D06F *37/00*

U.S. Cl. 68—212 11 Claims

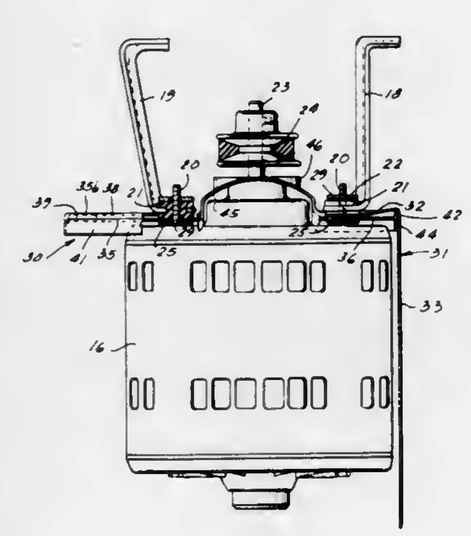

1. In an appliance having an electric motor and a liquid receptacle mounted generally above said motor, protection means for substantially preventing liquid from said receptacle from contacting said motor, said protection means comprising:

a shield mounted above said motor between said motor and said receptacle, said shield including raised perimeter portions for preventing liquid collected on said shield from contacting said motor, and

a flexible drape mounted on one side of said shield and extending downwardly adjacent a side of said motor.

4,061,003

KEY OPERATED LOCK

Aksel Pilvet, R.R. No. 2, Warsaw, Ontario, Canada

Filed Dec. 8, 1976, Ser. No. 748,482

Int. Cl.[2] E05B *21/00*

U.S. Cl. 70—352 2 Claims

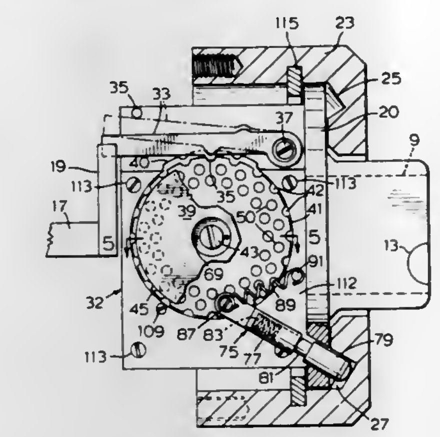

1. A lock and coded key card adapted to activate said lock, said lock comprising a locking member and a rotatable barrel assembly including a coupling member for coupling said barrel assembly to said locking member for moving said locking member from a locking to an unlocking position, said coupling member being uncoupled from said locking member by a first disc rotatably mounted to a second disc fixed to said barrel assembly so that said barrel assembly is freely rotatable of said locking member, said first and second discs being provided with aligned apertures, some of said apertures being fitted with a first set of tumblers locking said first disc relative to said second disc, others of said apertures being fitted with a second set of tumblers mounted in a release position, and being located in the path of the key card so that they are moved to a locking position to prevent movement of said first disc and to prevent coupling of said coupling member to said locking member when a key card bearing an incorrect code is inserted in said lock, said coded key card being adapted to engage both sets of tumblers such that said first set of tumblers are moved from the locking position and said second set of tumblers remain in a release position to release said first disc from said second disc, said first disc being tensioned to move relative to said second disc upon release of said first set of tumblers and being adapted to couple said coupling member to said locking member so that said locking member is moved from a locking position to an unlocking position.

4,061,004

PICK-PROOF LOCK CYLINDER AND KEY THEREFOR

George Pappanikolaou, 621 90th St., Brooklyn, N.Y. 11228

Filed Dec. 1, 1976, Ser. No. 740,212

Int. Cl.[2] E05B *19/12, 27/03*

U.S. Cl. 70—363 30 Claims

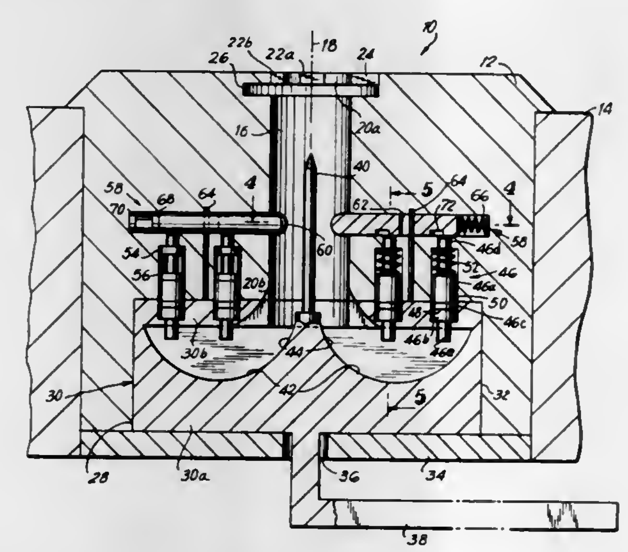

1. A lock cylinder for use with a jointed key generally defining an axis and having at least one pivotally mounted coded finger which is movable between an initial position substantially parallel to said axis and a final position substantially normal to said axis, said lock cylinder comprising an external housing having two coaxial cylindrical cavities in communication with each other, one of said cylindrical cavities defining a keyhole for the jointed key and having an opening to the exterior of said external housing at one end and a remote end proximate to the other of said two cavities, said keyhole having a diameter generally smaller than that of said other cavity; a revolving cylinder disposed beyond said remote end of said keyhole and having a diameter generally corresponding to that of said other cavity and mounted only for free coaxial rotation therein; means mounted on said revolving cylinder for common rotation therewith and adapted to cooperate with an associated lock mechanism, said revolving cylinder being provided with at least one cam surface generally facing said one of said cavities and having a surface portion proximate thereto whereby insertion of the jointed key into said lock cylinder causes said finger to initially abut against said cam surface portion, said cam surface being configured to move said finger from said initial position to said final position upon full insertion of the jointed key into said lock cylinder; and decoding means spaced from the axis of said cavities and cooperating with said external housing and said revolving cylinder for normally preventing said revolving cylinder from rotating relative to said external housing and permitting the same to rotate only when said decoding means detects an appropriate code on said finger in said final position of said finger.

4,061,005

METHOD AND APPARATUS FOR CONTINUOUS BENDING OF ELONGATED MATERIALS

Shunpei Kawanami, Hiratsuka, and Yukimitsu Hanamoto, Yokohama, both of Japan, assignors to Daiichi Koshuha Kogyo Kabushiki Kaisha, Japan

Filed Dec. 9, 1975, Ser. No. 639,195

Claims priority, application Japan, Sept. 18, 1975, 50-113468

Int. Cl.[2] B21D *7/12, 7/16, 9/00*

U.S. Cl. 72—30 20 Claims

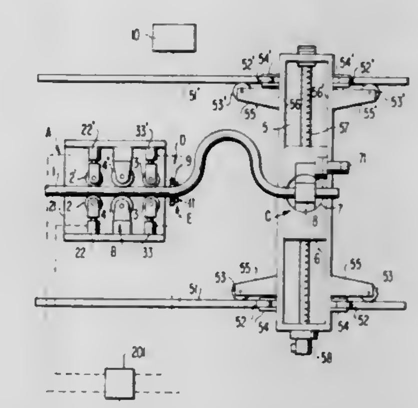

1. A method for bending elongated materials comprising the steps of:

guiding the elongated material to permit movement of the elongated material in a direction generally parallel to the principal axis of an unbent portion of the material;

clamping a portion of the material;

applying a bending force to the material by rotating a clamped portion of said material on an axis of rotation intersecting the clamped portion of the material, said axis being maintained substantially perpendicular to a plane and being freely displaceable;

heating a portion of the material intermediate the guided portion and the clamped portion of the material;

monitoring the reaction force on the material due to the application of the bending force; and

rotating the clamped portion of said material and selecting the perpendicular distance of the displaceable axis of rotation from the extended principal axis of the unbent

portion of the material in response to the monitored reaction force and a predetermined bending program.

8. An apparatus for bending elongated materials comprising:

guiding means for engaging elongated material moving relative thereto;

bending means associated with said guiding means for clamping a portion of the elongated material and for applying a bending force to the elongated material by rotating the clamped portion of the material on an axis of rotation, said axis being displaceable while being maintained substantially perpendicular to a plane including:

a frame moveable along a plane substantially parallel to the principal axis of an unbent portion of the elongated material engaged by said guiding means;

a slide member supported by said frame and moveable relative to said frame along an axis substantially perpendicular to the principal axis of the unbent portion of the elongated material engaged by said guiding means; and,

a clamping device for engaging the elongated material, supported by said slide member and driven to rotate with respect to said member; and,

heating means for heating a portion of the material said heating means being located intermediate the guiding means and the clamping device.

4,061,006

METHOD OF STRAIGHTENING FIREARM BARRELS

Arthur H. Burns, Jr., Hamden, Conn., assignor to The Marlin Firearms Company, North Haven, Conn.

Filed July 29, 1976, Ser. No. 709,778

Int. Cl.² B21D *3/16*

U.S. Cl. 72—34 **9 Claims**

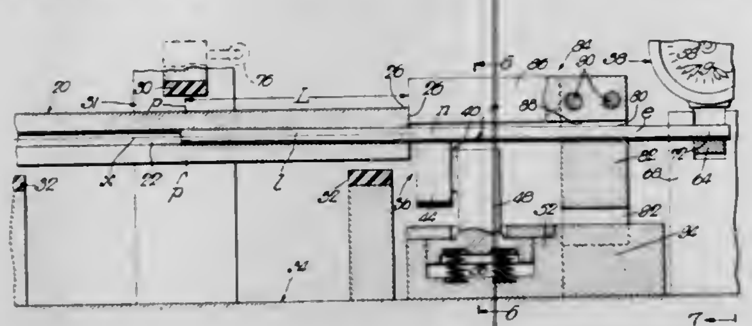

1. Method of straightening firearm barrels of equal lengths with drilled bores of equal diameters, which comprises measuring the deviation of the center axis of the bore of each barrel from a straight reference axis at a single transverse barrel plane spaced less than half the length of the barrel from one barrel end, of which the reference axis passes through the centers of the opposite bore ends and the spacing of said transverse plane of each barrel from said one barrel end is the same for all barrels, and bending each barrel only at said transverse plane thereof to an extent gauged from the measured deviation thereat of said center axis from said reference axis and in a direction to bring said center axis at said barrel plane substantially into line with said reference axis.

4,061,007

ELECTROMAGNETIC DENT REMOVER WITH ELECTROMAGNETIC LOCALIZED WORK COIL

Karl A. Hansen, and I. Glen Hendrickson, both of Seattle, Wash., assignors to The Boeing Company, Seattle, Wash.

Continuation-in-part of Ser. No. 489,290, July 17, 1974, Pat. No. 3,998,081. This application Jan. 2, 1976, Ser. No. 646,068

Int. Cl.² B21D *26/02*

U.S. Cl. 72—56 **35 Claims**

1. Apparatus for electromagnetically removing dents from conductive materials comprising:

a first current source for supplying a first current pulse of predetermined polarity and rise time;

a second current source for supplying a second current pulse having a polarity opposite to that of said first current pulse, said second current source including means for establishing the magnitude of said second current pulse at a predetermined magnitude relative to the magnitude of said first current pulse and means for establishing a rise time of shorter duration than said rise time of said first current pulse;

a dent removal head including an electrical coil formed of a conductive strip and electrically insulating material, said conductive strip having a width to thickness ratio substantially greater than unity and spirally wound to form a cylindrical coil having a plurality of convolutions with said insulating material interposed between adjacent convolutions, said dent removal head having a working surface positionable over said dents of said conductive material, said cylindrical coil being configured and arranged to

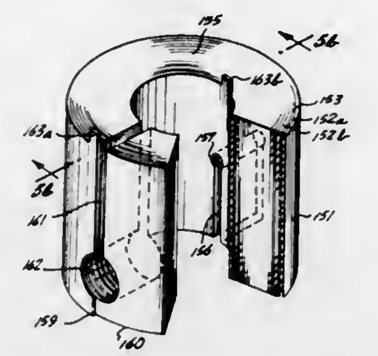

define a predetermined stressing region within said working surface of said dent removal head, said predetermined stressing region supplying localized electromagnetic flux when electrical current flows through said convolutions, said localized electromagnetic flux being higher in intensity than the electromagnetic flux formed within regions of said working surface outside of said stressing region; and

control means connecting said coil to said first and second current sources for supplying said first and second current pulses to said electrical coil, said control means including means for supplying said second current pulse at a time when said first current pulse attains a predetermined magnitude.

4,061,008

ROLLS OF A SKEWED-ROLL MACHINE FOR TRUEING CYLINDRICAL METAL ARTICLES

Jury Lukich Semenenko, ulitsa Gogolya, 1, kv. 30, Dnepropetrovsk, U.S.S.R.

Filed Nov. 10, 1976, Ser. No. 740,735

Int. Cl.² B21D *3/04*

U.S. Cl. 72—98 **2 Claims**

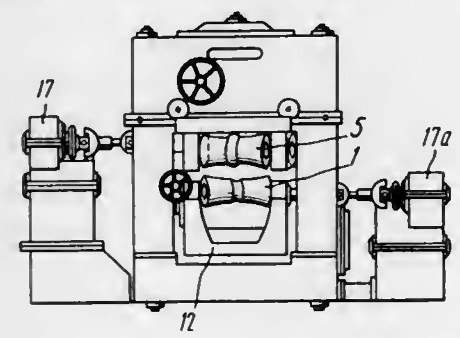

1. A skewed-roll trueing machine for trueing cylindrical metal articles having a narrow central portion and a thickened end portion wherein the plastic torque of the bending resistance of the cross-section of the thickened end portion of the article to be trued exceeds the plastic torque of the bending resistance of the cross-section of the narrow central portion of the article to be trued by not more than 10%, comprising a pair of rolls, means for positioning said rolls at an angle with respect to the trueing axis and at an angle with respect to each other and means for spacing said rolls apart corresponding to the diameter of the article to be trued, said pair of rolls comprising a support roll in the form of a body of rotation with a biconcave profile wherein the portions of said support roll adjoining the ends thereof have a hyperboloidal concave surface for engaging the narrow central portion of the article to be trued, and the central portion of said support roll has a hyperboloidal concave surface for bending the thickened end portion of said article to be trued, wherein the curvature of said central portion of said support roll is greater than the curvature of the portions adjoining the ends of said support roll, a pressure roll in the form of a body of rotation with a convexo-concave profile wherein the portions of said pressure roll adjoining the ends thereof have a hyperboloidal concave surface with a curvature for engaging the thickened end portion of the article to be trued, and the central portion of said pressure roll comprises a radially projecting strip means having a curvilinear profile and a radial height for producing a bending torque on the article to be trued less than the maximum permissible value required for trueing the narrow central portion of the article to be trued and not less than the minimum permissible value required for trueing the thickened end portion of the article to be trued.

4,061,009

MACHINE FOR SPINNING TUBULAR WORKPIECES

Vladimir Georgievich Kaporovich, ulitsa Lenina, 2, kv. 106; Viktor Grigorievich Sereda, ulitsa Jubileinaya, 11, kv. 127; Vitaly Kirillovich Udovenko, ulitsa Parkovaya, 35, kv. 105; Nadezhda Nikolaevna Zelenskaya, ulitsa Shkadinova, 58, kv. 75; Viktor Yakovlevich Brazhnik, ulitsa Pionerskaya, 5, kv. 34, all of Kramatorsk; Evgeny Pavlovich Sviridov, ulitsa Orlovskaya, 6, kv. 80, and Jury Nikolaevich Fabrichev, ulitsa Volodarskogo, 54, kv. 44, both of Bryansk, all of U.S.S.R.

Filed Nov. 10, 1976, Ser. No. 740,736

Int. Cl.² B21D *41/04*

U.S. Cl. 72—69 **8 Claims**

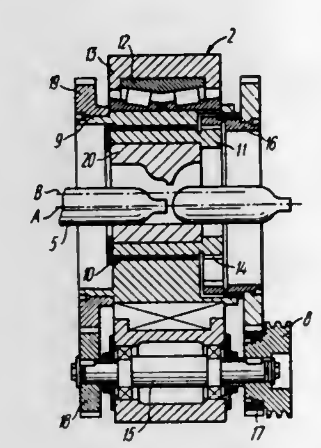

1. A machine for the spinning of tubular workpieces, comprising: a bed; a spindle mounted on said bed, said spindle comprising a main sleeve and an auxiliary sleeve, the bore axis of said main sleeve being somewhat offset with respect to the longitudinal axis of said main sleeve, said auxiliary sleeve being turnably mounted within said main sleeve and coaxially with the bore of said main sleeve, means for rotating said auxiliary sleeve and said main sleeve wherein said auxiliary sleeve is rotated at a speed slightly different from that of the main sleeve; a forming tool means for spinning a heated tubular workpiece, said forming tool means rigidly fixed within said auxiliary sleeve; clamping device means for clamping the tubular workpiece, means for stationary mounting of said clamping device means on said bed ahead of and coaxially with said spindle on the side of said spindle which receives the tubular workpiece; a feeding means for feeding the tubular workpiece into said spindle, said feeding means rigidly affixed on said bed ahead of said clamping device means.

4,061,010

APPARATUS FOR COOLING THE ROLLS OF ROLLING MILLS

Thomas Adrian Cheetham Stock; Patrick Daniel Dougan, and Olivo Guiseppe Sivilotti, all of Kingston, Canada, assignors to Alcan Research and Development Limited, Montreal, Canada

Division of Ser. No. 585,460, June 10, 1975, Pat. No. 3,994,151. This application Sept. 16, 1976, Ser. No. 723,966

Claims priority, application United Kingdom, June 11, 1974, 25942/74

Int. Cl.² B21B *27/10*

U.S. Cl. 72—201 **7 Claims**

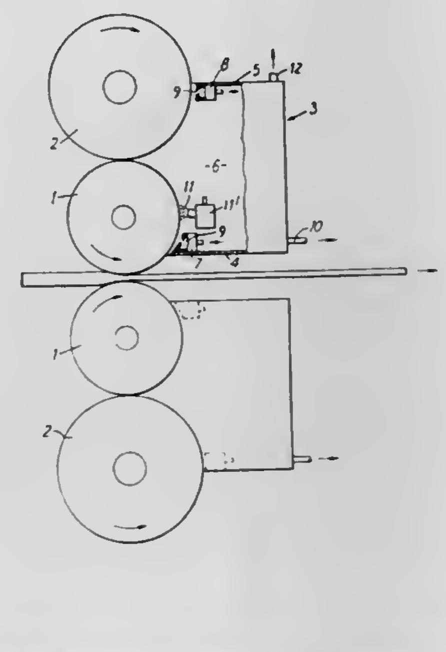

1. A rolling mill for metal reduction comprising

a. upper and lower work rolls defining a roll bite through which the metal is passed, for reduction, from an ingoing side to an outgoing side of the mill,

b. at least one back-up roll in contact with said upper work roll along a line of contact,

c. means for applying liquid coolant to the outer surface of said upper work roll at a locality on only the outgoing side of the mill above said roll bite,

d. a containment casing providing an enclosure in surrounding relation to said locality of application of liquid coolant for confining, in cooperation with said upper work roll and said one back-up roll, a region which includes said locality and extends from a first level intermediate said locality and said roll bite to a second level above said line of contact, said casing including a first transversely arranged wall lying in close proximity to, but spaced from, the surface of the upper work roll to define therewith a first narrow gap at said first level between said upper work roll and said enclosure for preventing contact between said upper work roll and said enclosure at least along a working portion of said upper work roll surface as said upper work roll rotates, the direction of movement of said work roll outer surface past said first gap being into said enclosure,

e. said casing further including a second transversely arranged wall lying in close proximity to, but spaced from, the surface of said one back-up roll for defining a second narrow gap between said one back-up roll and said enclosure, the direction of movement of the outer surface of said back-up roll past said second gap being into said enclosure,

f. means for establishing a rapidly moving flow of air along the surface of said upper work roll adjacent said first gap in a direction for preventing downflow of coolant through said first gap while causing exit of air from said casing, thereby to seal at least said first gap against exit of coolant therethrough from said confined region, and

g. means for withdrawing coolant from within said casing.

4,061,011
EXTRUSION
Derek Green, deceased, late of Aspatria, England, by Muriel Irene Green, executrix, Carlisle, England, assignors to United Kingdom Atomic Energy Authority, London, England
Filed July 29, 1976, Ser. No. 709,710
Claims priority, application United Kingdom, Aug. 6, 1975, 32942/75; Sept. 12, 1975, 37674/75
Int. Cl.² B21C *23/08*
U.S. Cl. 72—262 **8 Claims**

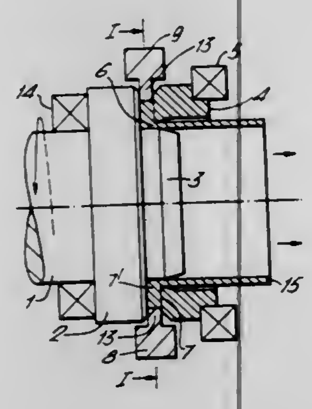

1. A process for the production of metal tube by continuous extrusion, comprising introducing non-molten metallic material to be extruded into a passageway extending in a closed loop and, at least over the major part of its length, being of progressively decreasing cross-section and formed between first and second members, of which said first member defines a greater surface portion of said passageway than does said second member, and moving the surface of the first member along said passageway relative to the second member to cause the material to be drawn along the passageway by frictional drag of said first member and to be fed to and extruded as a tube through an annular extrusion path adjacent to and in uninterrupted communication about its full circumference with a complete circuit of the closed loop of said passageway.

4,061,012
DRAWING AND IRONING MACHINE WITH POSITIVE CUP FEEDER
Elbert F. Wessman, New Lenox, Ill., assignor to National Can Corporation, Chicago, Ill.
Filed July 23, 1976, Ser. No. 708,230
Int. Cl.² B21D *22/00*
U.S. Cl. 72—347 **6 Claims**

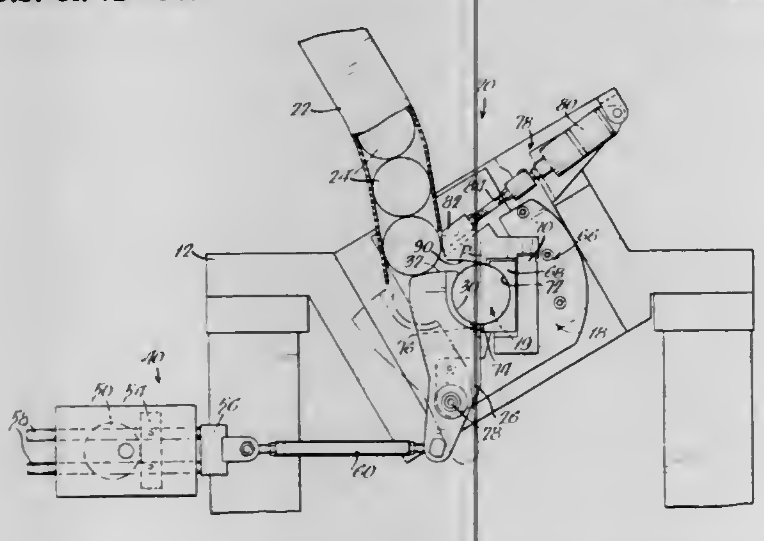

1. In a drawing and ironing machine having an elongated, generally horizontal opening with ironing rings surrounding said opening at axially spaced locations along said opening, a ram axially aligned with said opening and cooperating with said iron rings for drawing and ironing a cup into a container sidewall and end wall, and cup feeding means for feeding cups to said machine, the improvement of said cup feeding means comprising guide means for receiving a continuous supply of cups, said guide means extending generally vertically adjacent said opening having a lower open end, an arm pivoted intermediate opposite ends thereof about a fixed axis below said open end of said opening, said arm having an arcuate surface on one end thereof conforming generally to the periphery of said cups, drive means connected to an opposite end of said arm for pivoting said arm between first and second positions with said arcuate surface aligned with said open end in said first position and with said opening in said second position so that said cups are positively moved along an arcuate path from said guide means to said opening, stop means located adjacent said opening for arresting movement of said cups and cooperating with the arcuate surface on said arm to align said cups with said opening, and said stop means having an arcuate surface generally opposed to said arcuate surface on said arm and defining an uninterrupted continuation thereof when said arm is in said second position so that said cups are gripped between said arcuate surfaces when said arm is in said second position with sufficient pressure so that out of round cups will be rounded out by the cooperative action of said arcuate surfaces.

4,061,013
METHOD OF FORMING SOCKET WRENCHES
John Kuc, 213 Avondale Road, and Anthony Kuc, 601 Providence Road, both of Wallingford, Pa. 19086
Filed Sept. 29, 1976, Ser. No. 727,639
Int. Cl.² B21D *22/00*
U.S. Cl. 72—354 **10 Claims**

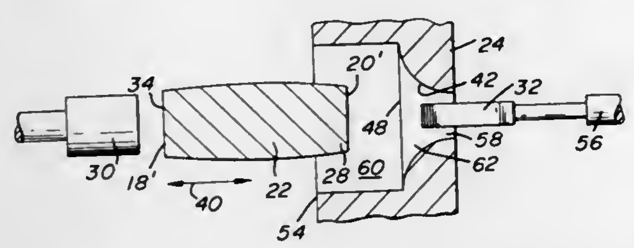

1. A method of forming forged socket wrenches devoid of machining operations including the steps of:

a. establishing solid metal billet having a predetermined volume, said billet having an extended dimension in a longitudinal direction;
b. squaring opposing longitudinal ends of said billet to form a pair of opposing substantially parallel planar faces being substantially normal to said longitudinal direction;
c. inserting said squared billet within an internal cavity of a female die having a through opening and adapted to form a taper on at least a portion of an external surface of said metal billet;
d. locating a first solid male die partially within said internal cavity tapered portion, said first male die having a cross-sectional area less than said female die through opening cross-sectional area; and,
e. longitudinally impacting a second end of said metal billet with a second male die to form a first socket recess, said billet being extruded around said first male die to form a second socket recess.

4,061,014
BOTTLE INSPECTION APPARATUS
Gerald J. Bott, 1941 Westwood Drive, NE., Grand Rapids, Mich. 49505; William C. Porter, 7530 28th Ave., Hudsonville, Mich. 49426, and Terrance M. Nowak, 1510 Pine, NW., Grand Rapids, Mich. 49504
Filed Oct. 27, 1976, Ser. No. 736,264
Int. Cl.² G01M *3/32*
U.S. Cl. 73—45.1 **19 Claims**

1. An apparatus for inspecting for leaks, dents, and other imperfections a plastic bottle having an open filling aperture, the apparatus comprising:

a nozzle shaped to seal against the bottle aperture and having means providing a sealing surface with the bottle aperture when the nozzle is in engagement with the aperture, the nozzle further having a passage therethrough;
means for supplying gas at a first predetermined pressure to the nozzle air passage so that air can be supplied to the bottles when the nozzle is in sealing engagement with the apertures thereof;
means for measuring the rate at which the pressure builds up in a bottle to a second predetermined pressure above the

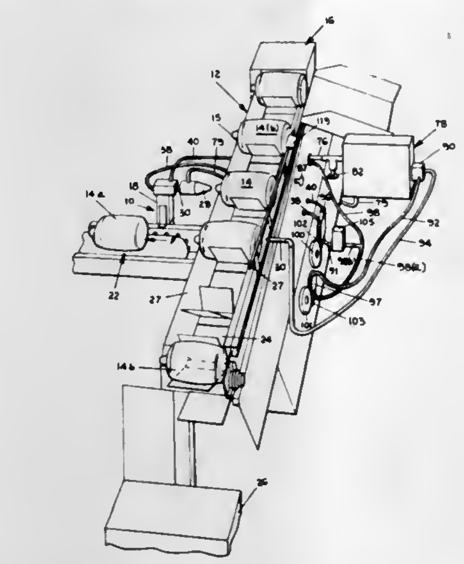

first predetermined pressure when the nozzle is in sealing engagement with the aperture thereof; and
means coupled to the measuring means for indicating whether the rate at which the pressure buildup in the bottle is as great as or below a predetermined rate; whereby the presence of holes, as well as dents and deformations in the bottle, can be detected with the inspecting apparatus.

4,061,015
PIPE PRESSURE TESTING DEVICE
Frank L. Fish, Wichita, Kans., assignor to Weaver Engineering & Mfg. Co., Wichita, Kans.
Filed July 6, 1976, Ser. No. 702,743
Int. Cl.² G01M *3/04*
U.S. Cl. 73—49.5 **6 Claims**

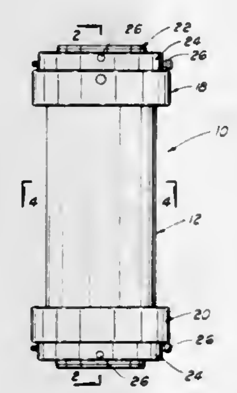

1. A pipe pressure testing device for testing the strength of an elongated pipe specimen hydrostatically, the device comprising:

an elongated center tube having a smaller diameter and greater length than the pipe specimen, said center tube inserted inside the pipe specimen, the ends of said center tube extending outwardly from both ends of the pipe specimen;
a pair of hollow end caps, said end caps having a first inner circumference and a second inner circumference with a flange portion therebetween, the first inner circumference received around the ends of said center tube with the ends of said center tube extending therethrough, the second inner circumference received around the ends of the pipe specimen, the flange portion providing a seal between the outer circumference of said center tube and the inner circumference of the pipe specimen, one of said caps including a conduit therethrough and communicating with the outside of the cap and the space between the outer circumference of said center tube and the inner circumference of the pipe specimen, said circuit receiving pressure fluid therethrough; and
a pair of hollow restraining collars received around the outer circumference of the ends of said center tube and disposed adjacent the outside of said caps, and restraining pins inserted through apertures in said restraining collars and indexed with apertures in the ends of said center tube for securing said caps against the ends of the pipe specimen.

4,061,016
METHOD AND APPARATUS FOR MEASURING THE FOAM LIFE ON AN EFFERVESCENT BEVERAGE
Jean Pierre Noel, and Gilbert Bauer, both of Strasbourg, France, assignors to Ste Anonyme Dite Brasseries Kron Enbourg, Strasbourg, France
Filed Sept. 30, 1976, Ser. No. 728,401
Claims priority, application France, Dec. 24, 1975, 75.40409
Int. Cl.² G01N *21/24*
U.S. Cl. 73—60.1 **7 Claims**

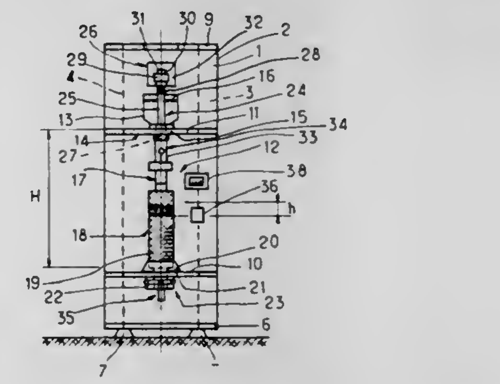

1. A method of measuring the life of foam on a nonopaque liquid, said method comprising the steps of:

selectively pouring a predetermined quantity of said liquid from a preselected height into a vessel to cause formation of a predetermined level of foam on the surface of the liquid of the vessel;
rotating said vessel continuously on a support about a generally vertical axis and thereby rotationally entraining said liquid and said foam;
starting a timer substantially when said foam first forms on said surface;
directing a beam of light generally vertically and offset from said axis from one side through said foam and said surface as same rotate;
measuring the intensity of said beam on the other side of said surface and said foam; and
stopping said timer when the measured intensity of said beam is greater than a predetermined threshold level, whereby the elapsed time between starting and stopping of the timer is indicative of the life of said foam.

4,061,017
STRUCTURAL ANALYSIS SYSTEM
Edwin A. Sloane, Los Altos, and Bruce T. McKeever, Mountain View, both of Calif., assignors to Time/Data Corporation, Santa Clara, Calif.
Filed Nov. 17, 1975, Ser. No. 631,555
Int. Cl.² G01M *7/00*
U.S. Cl. 73—579 **44 Claims**

1. A system for determining the modal characteristics of a structure comprising:

a plurality of shakers coupled to said structure;
means for applying to said shakers a plurality of driving signals having a common preselected complex frequency

and a preselected set of amplitudes and phases corresponding to a mode of interest;
means for sensing the response of said structure to said driving signals;
means for receiving said driving signals and said sensed response and for generating a set of transfer functions in

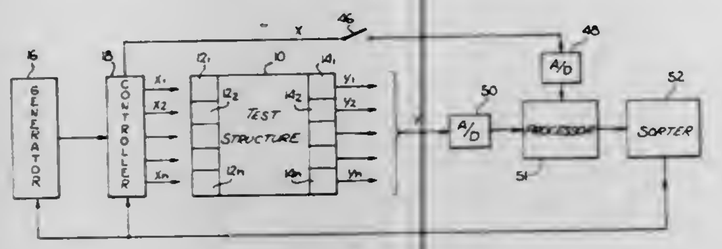

the complex frequency domain characteristic of said structure corresponding to said mode of interest, and set of transfer functions containing the complex frequencies and complex residues of said mode of interest; and
means for sorting said complex frequencies and said complex residues to obtain a complex frequency and a set of amplitudes and phases corresponding to said mode of interest.

4,061,018
METHOD AND APPARATUS FOR DISTANCE MEASUREMENT IN AN ULTRASONICS SCANNING IMAGE
Christoph Benedikt Burckhardt, Muttenz; Pierre-André Grandchamp, Munchenstein, both of Switzerland, and Heinz Hoffmann, Grenzach, Germany, assignors to Hoffmann-La Roche Inc., Nutley, N.J.
Filed Apr. 28, 1976, Ser. No. 681,110
Claims priority, application Switzerland, May 5, 1975, 5742/75
Int. Cl.² G01N *29/00*
U.S. Cl. 73—629 8 Claims

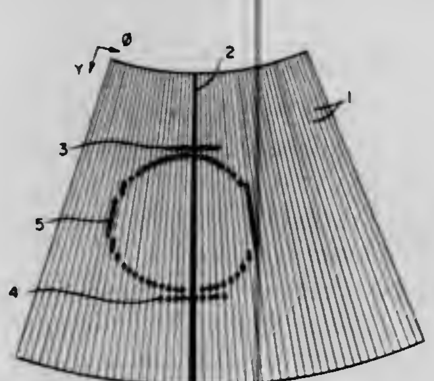

1. Method for distance measurement in an ultrasonic scanning image in ultrasonic diagnostics, by means of pulse echo methods and employing an ultrasonic transducer, characterized by incorporating into the image measurement marks which can be displaced along or parallel to a recording line so as to be brought into coincidence with image points, electronically measuring a time interval between brightening of two such marks and simultaneously electronically computing and displaying the actual distance between points of an object under examination which correspond to the image points to which the distance measuring marks are set, the velocity of propagation of the ultrasonic waves within the object being taken into account in said computing of the actual distance.

4,061,019
APPARATUS FOR GENERATING FORCES IN A SPECIMEN
David H. Blasetti, 7019 Guilford Road, Philadelphia, Pa. 19082
Filed Mar. 16, 1976, Ser. No. 667,450
Int. Cl.² B06B *1/10*
U.S. Cl. 73—662 9 Claims

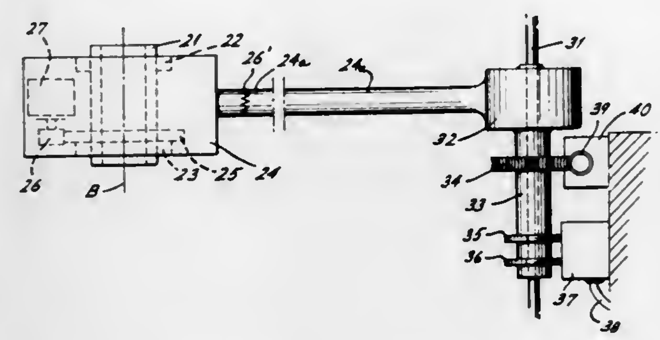

1. Apparatus for generating cyclically-varying forces in a solid specimen comprising a carrier for the specimen, mounting means in said carrier to fix said specimen in said carrier, means to rotate the carrier about a remote first axis at a given angular speed, whereby a centrifugal force radial to said first axis is generated by each particle in the specimen, means for effecting rotation of said specimen about a second axis perpendicular to the direction of the radial centrifugal force to thereby cyclically reverse the orientation of the centrifugal force generated by each particle in the specimen.

4,061,020
DEFORMETER
Robert B. Fridley; Pictiaw Chen; James J. Mehlschau, and Lawrence L. Claypool, all of Davis, Calif., assignors to The Regents of the University of California, Berkeley, Calif.
Filed Aug. 13, 1976, Ser. No. 714,184
Int. Cl.² G01N *3/48*
U.S. Cl. 73—81 17 Claims

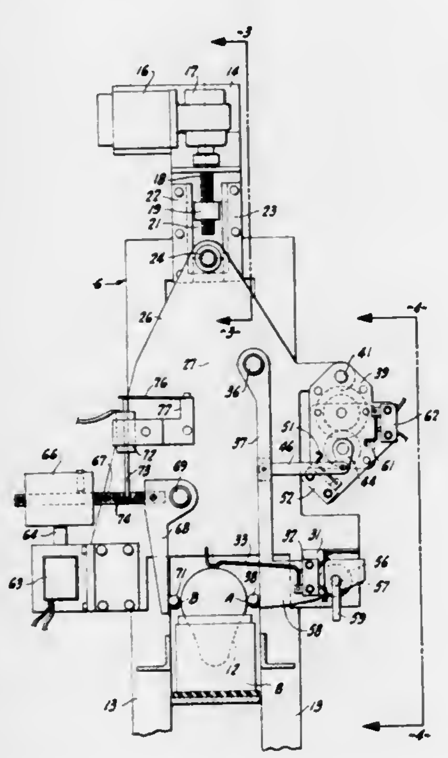

1. A deformeter for testing the maturity of fruit comprising a frame, means for supporting a fruit on said frame, means on said movable into contact with said fruit, means for pressing said movable means into contact with said fruit to establish a datum position, means for limiting the pressure exerted on said fruit by said movable means, means for disabling said limiting means and for pressing said movable means into contact with said fruit under a predetermined load to establish an indented position, and means for detecting the difference between said datum position and said indented position.

4,061,021
RECORDING SOIL PENETROMETER
William I. Baldwin, and Wesley F. Buchele, both of Ames, Iowa, assignors to Iowa State University Research Foundation, Inc., Ames, Iowa
Filed Jan. 28, 1977, Ser. No. 763,572
Int. Cl.² G01N *3/40*
U.S. Cl. 73—84 6 Claims

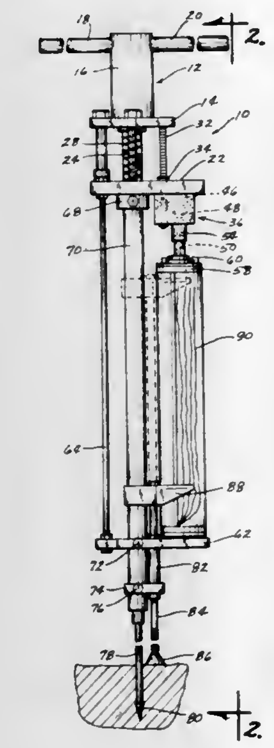

1. A penetrometer comprising,
a frame means having upper and lower ends,
a probe means on the lower end of said frame means for penetrating the soil,
ground engaging means vertically movably mounted on the lower end of said frame means,
a handle means operatively yieldably vertically movably mounted on the upper end of said frame means,
a recording drum means rotatably mounted, about a vertical axis, on said frame means and being adapted to have recording paper thereon,
a scriber means operatively connected to said ground engaging means for scribing the recording paper,
and means operatively interconnecting said handle means to said drum for causing rotation of said drum relative to the force required to cause said probe means to penetrate the soil,
said scriber means scribing a depth-penetration resistance graph on the recording paper as said probe is penetrating the soil.

4,061,022
HAIR TESTING APPARATUS
Robert W. Yates, Woodland Hills, Calif., assignor to Redken Laboratories, Inc., Van Nuys, Calif.
Filed July 19, 1976, Ser. No. 706,631
Int. Cl.² G01N *3/08*
U.S. Cl. 73—95 4 Claims

1. A tensile tester for strands of hair comprising a frame, a first movable member, a pair of parallel flat springs secured at one end to the first movable member and anchored at the other end to the frame for movably supporting the first member from the frame, a second movable member, means for driving the second member relative to the frame in a continuous uninterrupted cycle along a predetermined linear path extending substantially perpendicular to said flat springs from an initial position through a fixed displacement away from the first member and return to the initial position, means for securing a hair sample to the two movable members, a stop mounted on the frame and engaging the first movable member in an initial position, the flat springs urging the first movable member against the stop, a scale member mounted on the first movable member having a plurality of equally spaced indicia extending therealong, the indicia being spaced along a direction parallel to the direction of movement of the first member, first counting means including a first sensor mounted on the frame for counting the number of indicia passing the sensor with movement of the first member, and means responsive to said first counting means for generating a digital output of the number

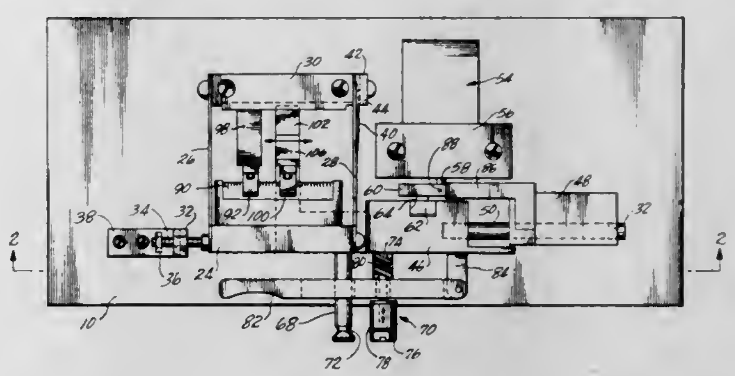

of indicia sensed by the first sensor, second counting means including a second sensor mounted on the second movable member for counting the number of indicia passing the second sensor with relative movement between the first and second movable members, and means responsive to said last-named means for generating a second digital output of the number of indicia sensed by the second sensor.

4,061,023
FUEL-METER-COMBINED FUEL CONSUMPTION RATE METER
Akira Kuno, Nagoya, and Yoshio Shinoda, Okazaki, both of Japan, assignors to Nippon Soken, Inc., Nishio, Japan
Filed Nov. 25, 1975, Ser. No. 635,269
Claims priority, application Japan, Jan. 27, 1975, 50-12180[U]
Int. Cl.² G01F *9/02*
U.S. Cl. 73—114 2 Claims

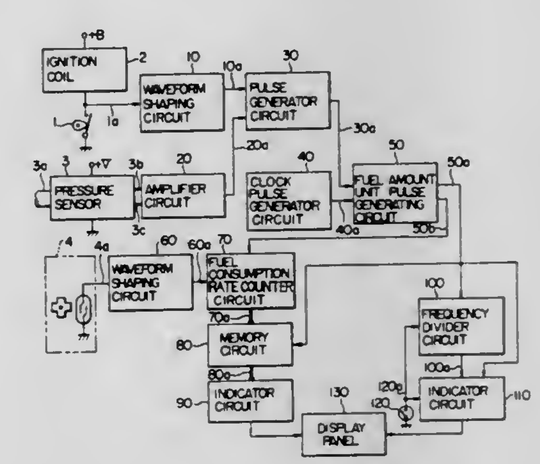

1. A fuel-meter-combined fuel consumption rate meter for engine-mounting vehicles comprising:
measuring means for generating an output signal indicative of the momentary amount of fuel consumed by the running vehicle,
computing means for computing the momentary rate of fuel consumption and generating an output signal thereof from said output signal of said measuring means,
first indicating means comprising an ammeter with a needle responsive to said computing means output for indicating said momentary fuel consumption rate thereon in analog form in response to said output signal of said computing means,
integrating means connected to said measuring means for generating an output signal indicative of an accumulative amount of fuel consumed by integrating said output signal of said measuring means, and
second indicating means comprising a plurality of digital

display elements for indicating in digital form said accumulative fuel amount on said ammeter of said first indicating means in response to said output signal of said integrating means.

4,061,024
FUEL MEASURING SYSTEM FOR ENGINES AND METHOD OF MONITORING FUEL FLOW
Curtis L. Erwin, Jr., 5805 SE. Gladestone, Portland, Oreg. 97208
Division of Ser. No. 456,264, March 29, 1974, Pat. No. 3,949,602. This application Mar. 22, 1976, Ser. No. 668,663
Int. Cl.² G01F *9/02*
U.S. Cl. 73—114 **8 Claims**

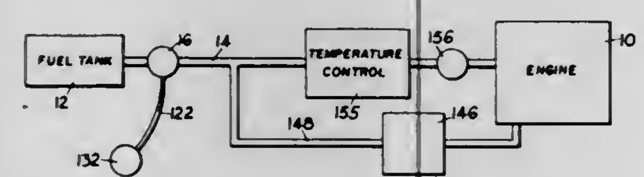

6. A fuel measuring system in combination with an engine, fuel supply means for said engine, said engine being of the type in which a portion of the fuel fed thereto in unburned, a return line from said engine arranged to recirculate unburned fuel back to the engine, treatment means having means for connection in said measuring system, measuring means having a movable member, an electric circuit, magnetic pickup means in said circuit actuated by said movable member, and recording means responsive to said pickup means making a record of the rate of fuel flowing through said measuring means.

4,061,025
SPEED-RELATED INDICATION COMPARISONS IN INTERNAL COMBUSTION ENGINE DIAGNOSTICS
James F. Willenbecher, East Windsor, and Lee R. Armstrong, Enfield, both of Conn., assignors to United Technologies Corporation, Hartford, Conn.
Filed May 7, 1976, Ser. No. 684,036
Int. Cl.² G01L *3/00*
U.S. Cl. 73—116 **6 Claims**

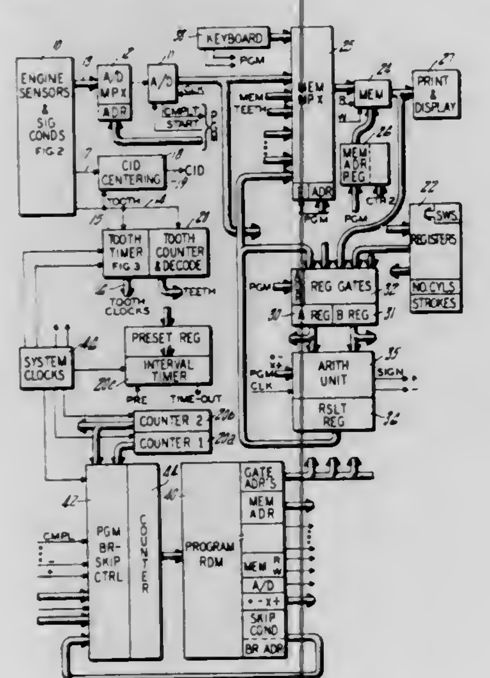

1. Apparatus for measuring a parameter on an internal combustion engine in relation to a predetermined specification speed, comprising:

means for registering at least one speed data manifestation identifying a test speed at which a corresponding parameter of an engine is to be measured;

a transducer adapted to be disposed with respect to the engine to sense said parameter and provide a parameter signal indicative thereof;

speed sensing means, adapted to be disposed for response to mechanical movement of a portion of the engine in relationship to the angular revolutions of the engine, for repetitively providing successive measured data manifestations of the time elapsed during angular revolution of the engine through a known angle and therefore indicative of the speed of the engine as the engine rotates; and

processing means, responsive to said registering means and to said speed means, for converting said speed data manifestation into a corresponding specification data manifestation indicative of the time required for the engine to rotate said known angle at the speed indicated by said speed data manifestation, for comparing said successive measured data manifestations with said specification data manifestation and for sampling said parameter signal in response thereto.

4,061,026
FULL THROTTLE, SPECIFIC SPEED TESTS IN INTERNAL COMBUSTION ENGINE DIAGNOSTICS
Harvey J. Goodfriend, Simsbury; Henry J. Mercik, Jr., and Lee R. Armstrong, both of Enfield, all of Conn., assignors to United Technologies Corporation, Hartford, Conn.
Filed May 7, 1976, Ser. No. 684,329
Int. Cl.² G01L *3/00*
U.S. Cl. 73—116 **11 Claims**

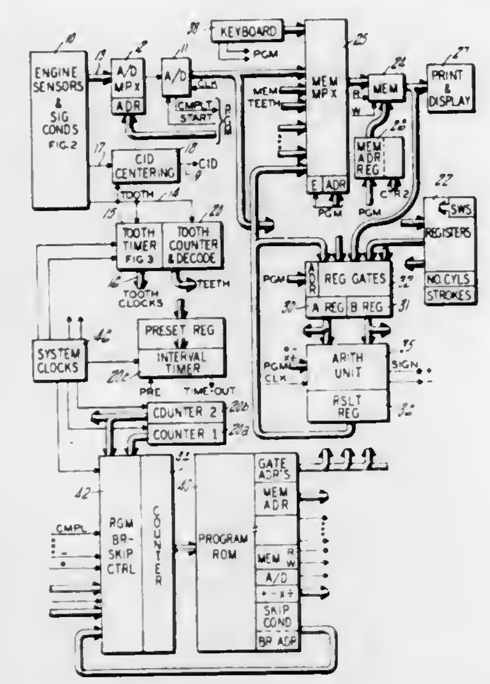

1. Apparatus for testing an internal combustion engine while operating under open throttle conditons without the need of a dynomometer, comprising:

transducer means adapted to be disposed for response to an engine-related parameter, a measurement of which is desired with the engine operating under open throttle conditions;

speed sensing means adapted to be disposed to sense rotation of the engine under test through an angular increment which is substantially less than a revolution of the engine as related to time in a fashion to provide an indication of speed on a sub-revolution basis; and

processing means responsive to said speed means for successively monitoring the speed indication provided by said speed sensor means as said engine is accelerating and, in response to said indications indicating that the engine has reached a speed in excess of a predetermined speed, sampling the output of said transducer means.

4,061,027
FUEL INJECTOR TESTING APPARATUS
Reginald Stanley Emerson, Buckingham, England, assignor to Leslie Hartridge Limited, England
Filed Oct. 15, 1976, Ser. No. 732,780
Claims priority, application United Kingdom, Oct. 17, 1975, 42668/75
Int. Cl.² G01M *3/28*
U.S. Cl. 73—119 A **15 Claims**

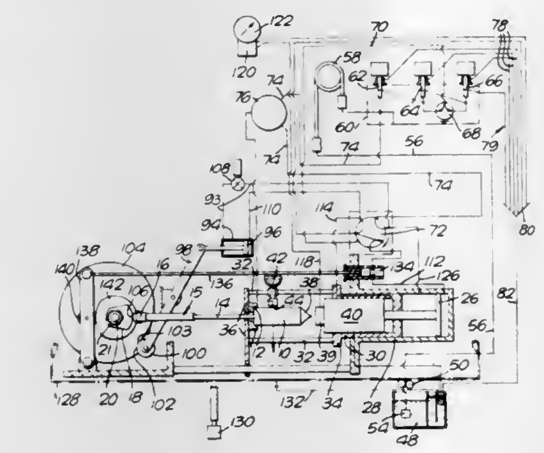

1. Apparatus for testing fuel injectors having a fuel delivery nozzle at one end and their own in-built high-pressure pump, the apparatus comprising a hydraulic clamp for engaging and thus clamping the nozzle end of the injector into a fuel-collecting nose assembly, the nose assembly including a valve which is loaded by a spring which simulates pressure conditions prevailing in an engine cylinder with which the injector is designed to be used, and a composite fuel system for supplying fuel to the injector and to different parts of the apparatus, the said fuel system including at least one valve having at least one weight acting on it to produce fuel at a pressure determined by the weight.

4,061,028
AIRCRAFT TOTAL ENERGY SENSOR
Oran W. Nicks, 425 Elizabeth Lake Drive, Hampton, Va. 23669
Filed Feb. 25, 1977, Ser. No. 772,166
Int. Cl.² G01C *21/00*
U.S. Cl. 73—179 **11 Claims**

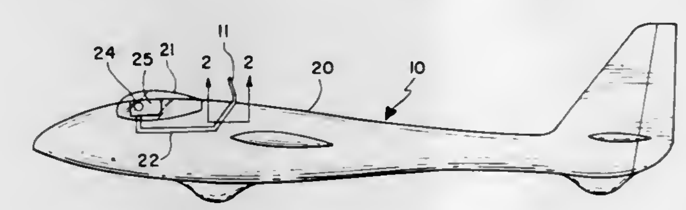

1. An energy sensor probe for providing a signal representative of changes in useful total energy for an aircraft during flight comprising:

an elongated tubular member positioned on the exterior of the aircraft and having an open end and a closed end,

said closed end of said tubular member being angularly inclined forward relative to the direction of flight of the aircraft and provided with a single orifice formed in the aft portion thereof and spaced from said closed end,

said open end of said tubular member being in fluid connection with a sensitive variometer whereby, during aircraft flight the laminar air flow around said tubular member produces pressures which vary with changes in aircraft velocity and altitude that are proportional to changes in total energy pressure and these changes being detected by the energy sensor probe and indicated by the variometer.

4,061,029
FLOW SEPARATION DETECTOR
James C. Fletcher, Administrator of the National Aeronautics and Space Administration, with respect to an invention of George C. Mateer, Los Gatos, Calif., and Aviel Brosh, Haifa, Israel
Filed Aug. 6, 1976, Ser. No. 712,419
Int. Cl.² G01C *21/00*
U.S. Cl. 73—180 **9 Claims**

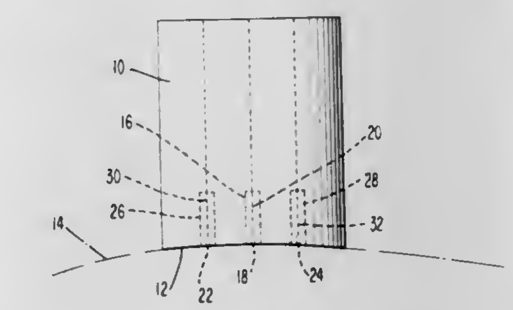

1. A flow separation detector or the like comprising a body with a low thermal conductivity, said body having a surface adapted to be aligned with and become part of the surface from which the flow separation is to be detected, a heater conductor having a longitudinal axis, two temperature sensing conductors each having a longitudinal axis, said conductors being mounted substantially flush with said body surface so as to minimize flow interference, said temperature sensing conductors being mounted on opposite sides of said heater conductor in the direction of the flow to be detected, means for heating said heater conductor, means for measuring the temperature differential between said temperature sensing conductors, said differential being a function of the flow separation.

4,061,030
METHOD AND DEVICE FOR CORRECTING THE OUTPUT SIGNAL FROM A DIGITAL TRANSDUCER FOR MEASURING A PHYSICAL MAGNITUDE OR VARIABLE
Tor Lennart Bernt Grivérus, Nasbydalsvagen 6, 183 31 Taby, Sweden
Continuation-in-part of Ser. No. 522,789, Sept. 7, 1976, Pat. No. 3,978,727. This application July 28, 1976, Ser. No. 709,432
Claims priority, application Sweden, Nov. 9, 1973, 7315252
Int. Cl.² G01F *1/05*
U.S. Cl. 73—194 E **11 Claims**

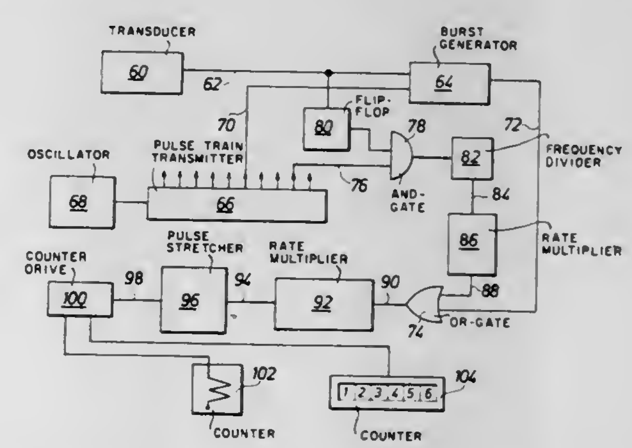

2. The method of claim 1, in which the step of gating the pulses of said one substrain with said transducer pulses to produce correction pulses includes limiting the number of correction pulses produced for each transducer pulse when the transducer frequency falls below its lowest operating value.

4,061,031
COMBINATION OF FLOW METER AND BUBBLE TRAP
Lars Grimsrud, P.O. Box 1379, Salmon, Idaho 83467
Filed Nov. 5, 1975, Ser. No. 628,971
Int. Cl.² A61B *5/02;* **A61M** *1/03;* **G01F** *1/20, 15/08*
U.S. Cl. 73—200 **7 Claims**

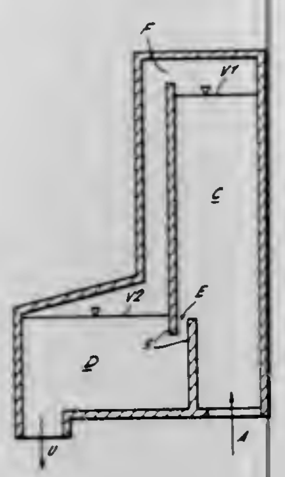

1. An apparatus for measuring the flow rate of and for releasing entrapped air bubbles in a blood stream which has been extracted temporarily from a patient for extracorporeal treatment comprising

a closed container having an inlet opening and an outlet opening therein so that the blood stream can flow therethrough,

a vertically disposed partition means for dividing the container into two chambers, respective ones of which are in direct communication with each of the openings to thereby form inlet and outlet chambers,

first opening means in said partition means above the level of said inlet opening and said outlet opening, said first opening means being of a smaller cross-section than the inlet opening so that blood accumulates in said inlet chamber to a depth at which said first opening is sufficiently below the surface of the blood in the inlet chamber that increased pressure equalizes the blood flow rate through said first opening means thereby controlling the flow of the blood stream therethrough from said inlet chamber to said outlet chamber so that the height of blood in said inlet chamber is a function of the blood flow rate, and

second opening means in said partition means adjacent the top thereof for equalizing the air pressure in said closed container between said inlet and outlet chambers.

4,061,032
LIQUID FLOW METER OR THE LIKE FOR CORROSIVE LIQUIDS UNDER PRESSURE
Eberhard Friebel, Berlin, Germany, assignor to Siemens Aktiengesellschaft, Berlin & Munich, Germany
Filed Sept. 9, 1976, Ser. No. 721,691
Claims priority, application Germany, Sept. 12, 1975, 2541246
Int. Cl.² G01F *15/14;* **G12B** *9/02;* **F16L** *58/00*
U.S. Cl. 73—273 **9 Claims**

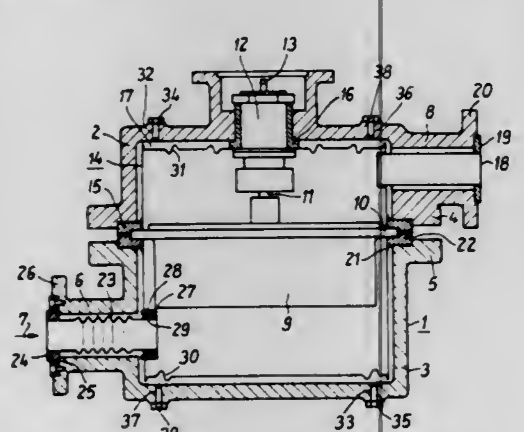

1. In a liquid fitting for corrosive liquids under pressure, comprising a pressure resistant outer housing, an inner housing and a space filled with a liquid to be measured between the outer and the inner housings, the improvement comprising:

a. a thin walled corrosion resistant elastic lining, forming a hollow wall attached to the inside surfaces of the outer housing, and

b. a noncorrosive liquid medium filling said hollow wall.

2. Apparatus according to claim 1 wherein said fitting is a liquid flow meter for measuring a corrosive liquid under pressure in which a measuring chamber housing with a movable measuring element is arranged forming said inner housing.

4,061,033
TEMPERATURE FUNCTION INTEGRATOR
Peter Anthony Nixon, Wellington, New Zealand, assignor to Development Finance Corporation, New Zealand
Filed Mar. 8, 1976, Ser. No. 664,475
Claims priority, application New Zealand, Mar. 10, 1975, 176879
Int. Cl.² G01D *1/04, 3/02;* **G01N** *33/02*
U.S. Cl. 73—339 R **8 Claims**

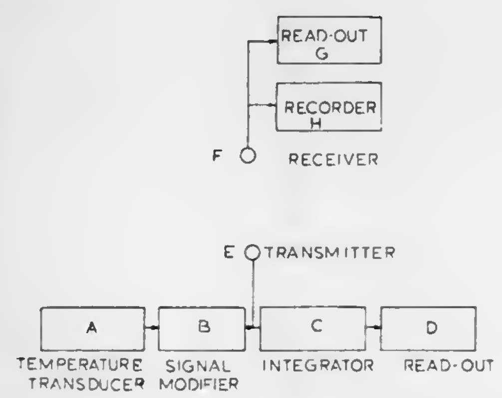

1. A temperature function integrator comprising: a transducer which senses temperature in a material being monitored and produces an electrical quantity proportional to the sensed temperature, an analogue-to-digital converter means for converting the transducer output to digital form, a digital memory loaded with temperature - rate of deterioration data which outputs in digital form the rate of deterioration corresponding to the temperature sensed at that instant, means which integrate the output from the digital memory with respect to time and which store the value of the integral upon termination of the monitoring period, and means for providing a read-out of the value of said integral as a measure of the deterioration of said material up to the time of reading.

4,061,034
FLUID PRESSURE SENSING DEVICE
Gerard T. Perkins, 19934 Southfield Road, Detroit, Mich. 48235
Continuation-in-part of Ser. No. 599,050, July 25, 1975, abandoned. This application Apr. 9, 1976, Ser. No. 675,444
Int. Cl.² G01L *9/02, 7/08, 7/16*
U.S. Cl. 73—398 AR **20 Claims**

1. A fluid pressure responsive device comprising a housing; a chamber formed in said housing and having a curved wall section; a spherical member disposed within said chamber and having a curved surface formed on a radius smaller than that of said wall section whereby the circular surface of said member engages said curved wall section at different points depending upon the position of said member in said chamber; and fluid

pressure means exerting a force on said member such that the position of said member in said chamber is a function of the

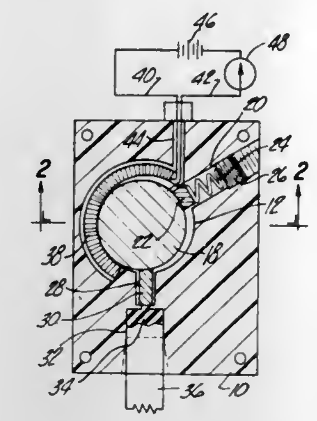

magnitude of the fluid pressure exerted by said last mentioned means.

4,061,035
DIAPHRAGM ARRANGEMENT FOR PRESSURE TRANSDUCERS
Günther Witzke, Seuzach, and Hans Ulrich Baumgartner, Winterthur, both of Switzerland, assignors to Kistler Instrumente AG, Winterthur, Switzerland
Filed Nov. 10, 1975, Ser. No. 630,515
Claims priority, application Switzerland, Nov. 8, 1974, 014967/74
Int. Cl.² G01L *7/08*
U.S. Cl. 73—406 **25 Claims**

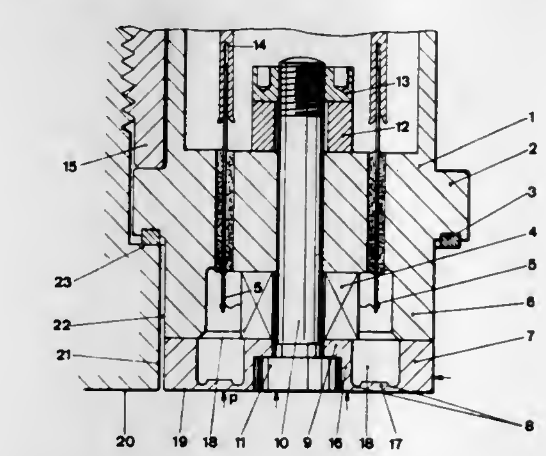

1. A diaphragm arrangement for a pressure transducer especially for use in monitoring an internal combustion engine, said transducer having a force measuring transducer element, said diaphragm arrangement comprising:

an outer ring portion;

an inner ring portion;

an elastic portion interconnecting said outer ring portion to said inner ring portion;

at least each of the inner and outer ring portions of said diaphragm arrangement forming a first surface coplanar with a surface by way of which said pressure transducer is mounted for measuring an input force applied thereto, and the inner ring portion having a second surface which provides support for said transducer element; and

means, coupled to said force measuring transducer element and said inner ring portion, for applying a preload to said force measuring transducer element.

4,061,036
DEVICE FOR THE EXTRACTION OF GASEOUS SAMPLES AND FOR THERMAL MEASUREMENT ABOVE THE BURDEN OF A SHAFT FURNACE
Edouard Legille, Luxembourg, Luxembourg, assignor to S.A. des Anciens Etablissements Paul Wurth, Luxembourg
Filed July 20, 1976, Ser. No. 706,947
Claims priority, application Luxembourg, July 24, 1975, 73050
Int. Cl.² G01N *1/22*
U.S. Cl. 73—421.5 A **10 Claims**

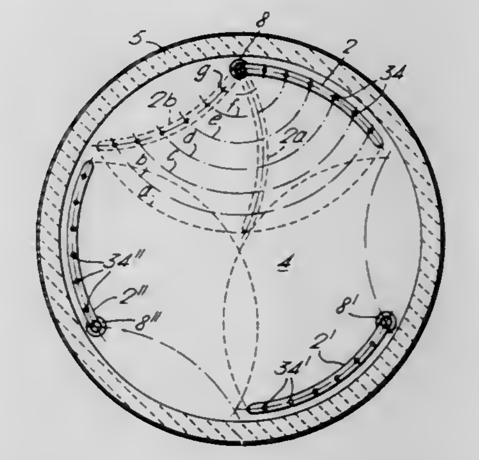

1. A device for the extraction of gaseous samples and for thermal measurement above the burden of a shaft furnace, the device comprising at least one probe arm permanently positioned in a substantially horizontal plane above the burden; a series of apertures distributed over the entire length of the probe arm and conduits communicating separately with each of the apertures and with the exterior of the furnace; and means for pivoting the probe arm from a rest position juxtaposed the inside wall of said shaft furnace across and above the burden in such a way as to scan practically the entire surface of the burden, said pivot means having at least one pivot axis juxtaposed the inside wall of said shaft furnace.

4,061,037
PIPETTES
William P. Keegan, 155 Beach 133rd St., Belle Harbor, N.Y. 11694
Filed Sept. 20, 1976, Ser. No. 724,920
Int. Cl.² B01L *3/02*
U.S. Cl. 73—425.6 **11 Claims**

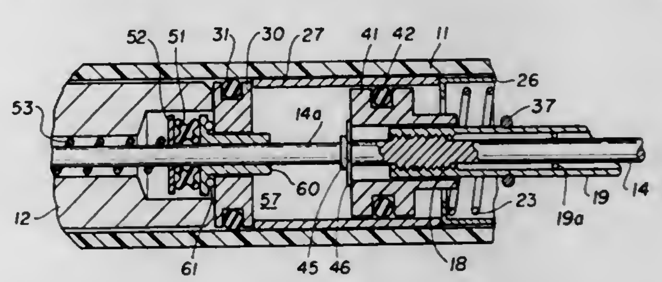

1. A pipette comprising an overblow piston having a longitudinal aperture therein, plunger rod means extending through the aperture in said overblow piston in a non-airtight relationship, means for reciprocating said rod means with respect to said piston, washer means mounted on said rod means for engaging said piston to move it to a fixed position, sealing means mounted on said rod means for movement into engagement with said piston to form an airtight relationship between said rod means and said piston and for moving said piston away from its fixed position, and means for adjusting the spacing between said washer means and said sealing means whereby the distance moved by said piston from its fixed position is adjustable.

4,061,038
MOSQUITO LARVAE DIPPER
John L. Clarke, Jr., Riverside, Ill., assignor to Clarke Outdoor Spraying Co., Inc., Roselle, Ill.
Filed Jan. 24, 1977, Ser. No. 761,643
Int. Cl.² G01F *19/00*
U.S. Cl. 73—427 **4 Claims**

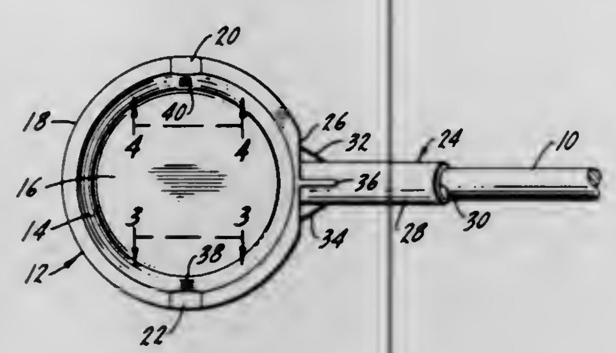

1. A dipper for use in removing mosquito larvae or the like from bodies of water including a cup and a handle,

said cup having a generally frusto-conic outer wall terminating in a laterally extending integral annular lip, a bottom integral with said wall, said annular lip and the adjacent areas of the upper portion of said wall forming generally diammetrically opposed pouring grooves, said grooves extending below the level of said lip, with the lip being continuous in size and shape throughout said grooves,

a handle support integral with said cup and extending outwardly from said cup wall, said handle support having a coaxially arranged cylindrical opening for mounting said handle, and a plurality of handle support fillets integral with said cup wall and handle support.

4,061,039
LOCOMOTIVE SPEED RECORDER SYSTEM
Livio F. Marcantonio, Utica, and Marcel P. D'Haem, New Hartford, both of N.Y., assignors to Chicago Pneumatic Tool Company, New York, N.Y.
Filed Apr. 8, 1976, Ser. No. 674,861
Int. Cl.² G01P *1/04, 1/06*
U.S. Cl. 73—489 **12 Claims**

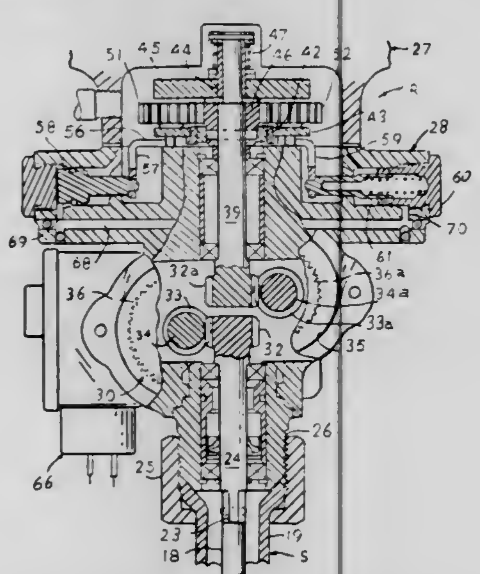

1. A speed recorder system comprising a speed recorder assembly having a primary input shaft, a drive unit having an input drive shaft connectible to an axle of a drive wheel of a locomotive, an output shaft from the drive unit, speed reduction gearing connecting the input drive shaft with the output shaft at an angle of 90°, a flexible drive cable connecting the output shaft with the primary input shaft, means to operatively disconnect the output shaft from the flexible drive cable, speed recording mechanism in the recorder assembly, and changeable gearing drivingly connecting the primary input shaft to the recording mechanism at a gear ratio selected to compensate for the R.P.M. reduction at the drive unit and to correct for a specific wheel diameter of the locomotive.

4,061,040
APPARATUS FOR MEASURING ROTATION RATES WITH ACOUSTIC WAVES
Herbert J. Shaw, Stanford, Calif., assignor to The United States of America as represented by the Secretary of the Navy, Washington, D.C.
Filed July 2, 1976, Ser. No. 702,175
Int. Cl.² G01P *3/42;* **G01C** *21/00*
U.S. Cl. 73—505 **8 Claims**

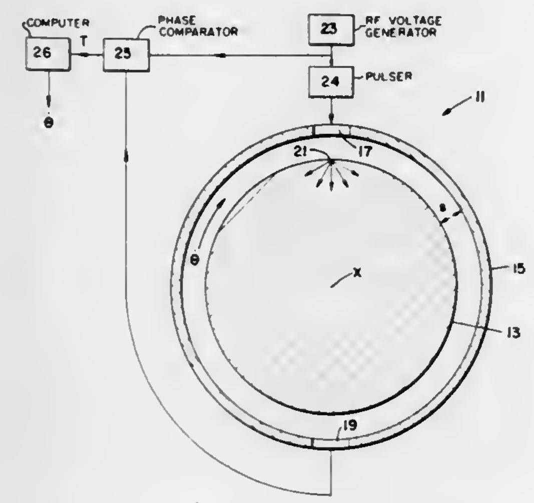

1. An apparatus for measuring the rotation rate of a spherical object of an isotropic material about axes passing through its center comprising:

a. means for exciting an acoustic wave at a first point on the surface of said object;

b. means for sensing the arrival of said acoustic wave on the surface of said object at a second point diametrically opposite to said exciting means, said exciting means and said sensing means being spaced apart from said object;

c. means for measuring the transit time required for said acoustic wave excited at said first point to propagate through said object to said second point; and

d. means for computing said rotation rate as a function of said transit time according to the formula

$$\theta = (2/T)\cos^{-1}(vT/d)$$

where θ is said rotation rate, T is said transit time, v is the acoustic velocity of propagation of said acoustic wave through said object, and d is the diameter of said object.

4,061,041
DIFFERENTIAL SOUND LEVEL METER
James C. Fletcher, Administrator of the National Aeronautics and Space Administration, with respect to an invention of and Allan J. Zuckerwar, Newport News, Va.
Filed Nov. 8, 1976, Ser. No. 740,156
Int. Cl.² G01H *3/12*
U.S. Cl. 73—646 **4 Claims**

1. A device for measuring small differences between two relatively high sound pressure levels comprising:

a first carrier channel means responsive to a first of said sound pressure levels for producing a first electrical signal proportional to said first sound pressure level;

a second carrier channel means responsive to the second of said sound pressure levels for producing a second electrical signal proportional to said second sound pressure level;

means receiving said first and second electrical signals for producing a third electrical signal that is proportional to the difference between said first and second electrical signals whereby said third electrical signal is proportional to the difference between said two sound pressure levels;

said means including means for changing the amplitude of said first electrical signal and means for changing the amplitude of said second electrical signal the last said means including means responsive to an electrical signal for varying the amount of change;

means for inserting equal amplitude electrical signals into said first and second carrier channels and for obtaining the

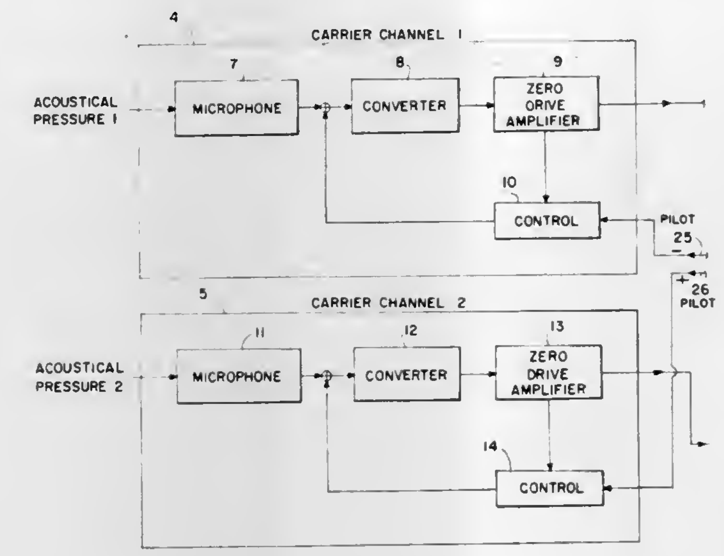

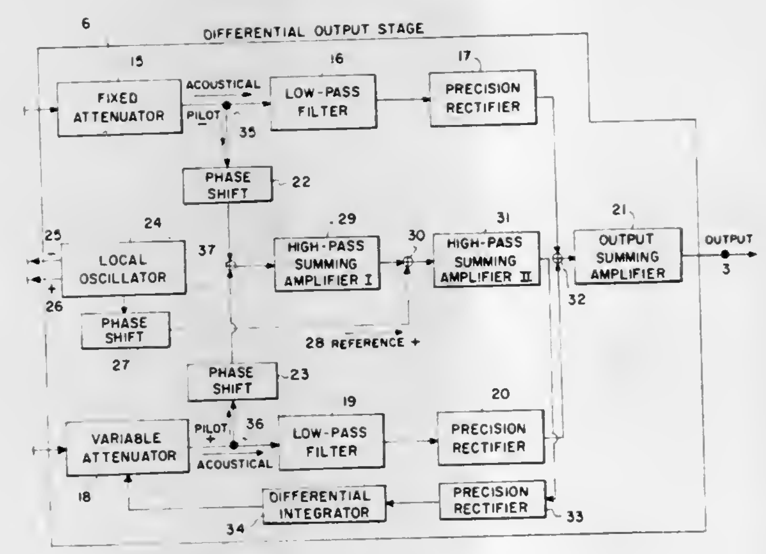

difference between said equal amplitude insertions electrical signals after they have passed through said means for changing the amplitudes of said first and second electrical signals; and

means for applying said difference between said equal amplitude insertion electrical signals to said means for varying the amount of change whereby the gain of the second channel is forced to follow the gain of the first channel.

4,061,042
AUDIO SIGNAL MONITORING SYSTEM WITH DISPLAY OF TWO SIGNAL CHARACTERISTICS
Wayne L. Hetrich, District Heights, Md., assignor to Corporation for Public Broadcasting, Washington, D.C.
Filed May 12, 1975, Ser. No. 576,746
Int. Cl.² G01H *3/12*
U.S. Cl. 73—647 **24 Claims**

1. An indicating instrument for displaying characteristics of an audio frequency signal subject to variations in amplitude, comprising high impedance input means for producing a first signal having a voltage varying in amplitude in proportion to said amplitude variations of said audio frequency signal, a display device including a meter for indicating instantaneous peaks in said amplitude variations and means for indicating sustained peaks in said amplitude variations, said indicating means comprising a plurality of light emitting diodes respectively corresponding to different predetermined threshold levels, a peak detector circuit responsive to variations in said first signal for driving said meter, and threshold circuit means supplied with said predetermined threshold levels and responsive to said first signal for selectively energizing said light

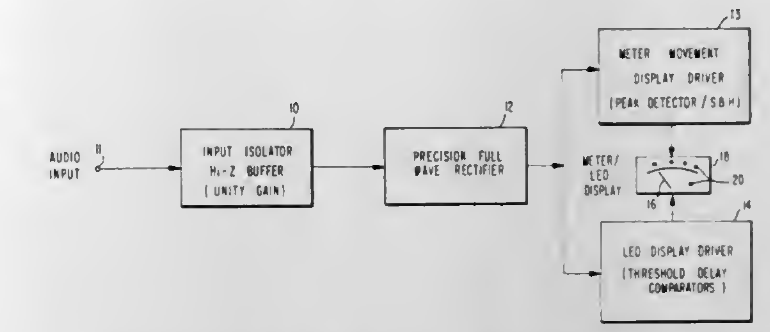

emitting diodes upon the amplitude of said first signal attaining said respectively corresponding predetermined threshold levels for a predetermined sustained period of time.

4,061,043
ELECTROSTATIC RATE GYROSCOPE
John Callender Stiles, 10 Abingdon St., Morris Plains, N.J. 07950
Filed Mar. 29, 1976, Ser. No. 671,257
Int. Cl.² G01C *19/28*
U.S. Cl. 74—5.6 D **16 Claims**

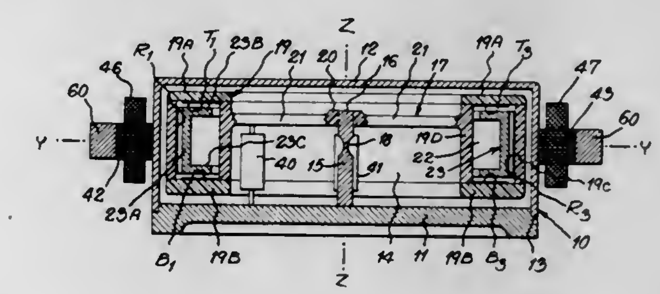

1. A gyroscope having a spin axis and at least one input axis comprising

a rotor housing having a toroidal cavity therein concentrically disposed about said spin axis;

mounting means for mounting said rotor housing to permit rotation thereof about at least one precession axis;

a rotor having a cylindrical body portion with projecting flange means thereon concentrically disposed within said cavity about said spin axis;

electrostatic suspension means for suspending said rotor within said cavity to permit rotor rotation about said spin axis and to prevent relative angular rotation between said housing and said rotor about said one precession axis, so that said housing rotates with said rotor about said precession axis in response to an input rate applied to said input axis; and

force transducer means coupled to said housing for exerting a force on said housing to prevent rotation thereof about said precession axis and for producing an output signal in response to said force, whereby said output signal is responsive to said applied input rate.

4,061,044
METER SETTING INDEXING GEAR APPARATUS
James R. Swaniger, Bridgeport, and Keith E. Schubert, Rowayton, both of Conn., assignors to Pitney-Bowes, Inc., Stamford, Conn.
Filed Aug. 6, 1976, Ser. No. 712,379
Int. Cl.² F16H *19/04*
U.S. Cl. 74—31 **10 Claims**

1. The combination of a lever operated mechanical postage meter having a number of levers to set postage, and a conversion apparatus for converting the mechanical postage meter into an electrically controlled postage meter, the combination further comprising:

a rotatably mounted, movably adjustable master pinion gear for sequential engagement with a plurality of racks;

a number of racks, each for sequential engagement with said master pinion gear, one rack for each respective meter bank, each rack having an arm operatively connected to a lever of a respective meter bank;

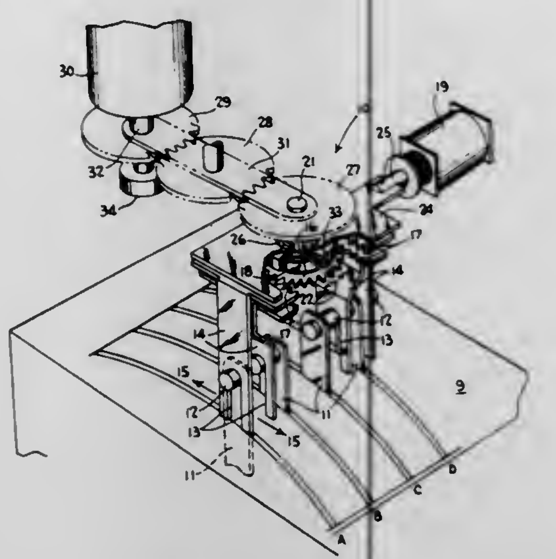

a pivotable drive means operatively connected to said master pinion gear for rotating said master pinion gear to cause each of said racks to move when engaged with said master pinion gear; and

indexing means connected to said master pinion gear for sequentially engaging said master pinion gear with each of said racks.

4,061,045
VARIABLE SPEED DRIVE MECHANISM
Jean Ernest Kopp, CH-3280, Meyriez, Murten, Switzerland
Filed Aug. 30, 1976, Ser. No. 718,768
Claims priority, application Switzerland, Sept. 11, 1975, 11831/75
Int. Cl.² F16H *13/02, 13/04*
U.S. Cl. 74—198 **9 Claims**

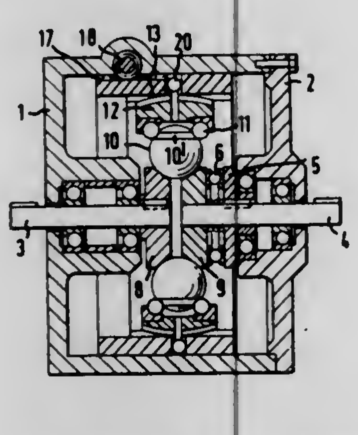

1. A drive mechanism providing a speed ratio that is infinitely variable between predetermined limits, the mechanism comprising a casing, driving and driven shafts mounted to rotate in said casing about a common axis fixed with respect to said casing, driving and driven members respectively mounted for rotation with said shafts and respectively formed with frusto-conical friction surfaces facing one another for supporting a control sphere therebetween, at least one control sphere mounted between said surfaces in frictional engagement therewith, a circular rolling bearing assembly engaged by a portion of said sphere remote from said surfaces, said circular rolling bearing assembly having its axis passing through the centre of said control sphere, an adjusting member mounted in said casing for linear to-and-fro movement parallel to said axis, a control segment interposed between said rolling bearing assembly and said adjusting member, said control segment being formed with an arcuate surface on a side thereof remote from said rolling bearing assembly, said arcuate surface being centred on the center of said control sphere, said adjusting member being formed with a flat surface in contact with said arcuate surface, and said adjusting member and said control segment being formed with interengaging elements arranged for said arcuate surface to roll on said flat surface when said adjusting member undergoes said linear movement, and means for effecting said linear movement, thereby angularly adjusting said axis of said rolling bearing assembly with respect to said common axis of said shafts to vary said speed ratio.

4,061,046
PEDAL-ACTUATED BICYCLE GEAR SHIFT MEANS
Richard A. Lang, 215 N. Pitt St., Alexandria, Va. 22314
Filed Sept. 3, 1976, Ser. No. 720,396
Int. Cl.² F16H *7/22;* B62M *9/00*
U.S. Cl. 74—217 B **14 Claims**

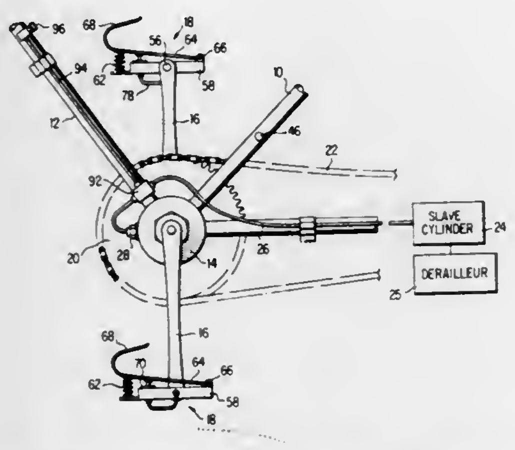

1. In a bicycle provided with front and rear sprockets defining multiple gears and a drive chain extending therebetween, a shifting mechanism, means to effect shifting of the chain with respect to the gears, the improvement comprising:

means cooperatively associated with the foot pedals of the bicycle for controlling the gear-shifting means, said pedal means including moveable elements on the pedal whereby movement of the pedal to any one of a plurality of preselected positions will effect the requisite shifting of the chain with respect to the gears.

4,061,047
PULLEY HALF MOUNTING OF VARIABLE SPEED PULLEY
Thomas Charles Newhouse, Beaver Dam, Wis., assignor to Deere & Company, Moline, Ill.
Filed Sept. 20, 1976, Ser. No. 724,631
Int. Cl.² F16H *55/52*
U.S. Cl. 74—230.17 C **3 Claims**

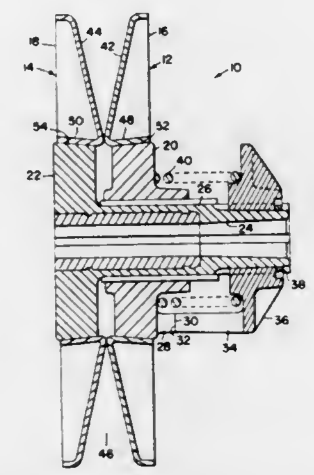

1. In a variable speed pulley including first and second pulley halves respectively including first and second belt engaging portions connected to first and second hubs adapted for being mounted on a drive shaft for rotation therewith with the first hub being axially fixed on the shaft and the second hub being axially slidable on the shaft; the improvement comprising: said first and second hubs respectively defining first and second annular outer conically tapered surfaces with the first tapered surface inclined radially outwardly in a direction away from the second hub and with the second tapered surface being inclined radially outwardly in a direction away from the first hub; and said first and second belt engaging portions respectively including first and second centrally located openings defined by first and second axially extending flanges respectively press fit onto said first and second inclined surfaces.

4,061,048
BICYCLE GEAR CHANGE
Roger H. Huret, and Jacques A. Huret, both of 60, av. Felix Faure, Nanterre, France (F 92000)
Filed June 14, 1976, Ser. No. 695,883
Claims priority, application France, June 12, 1975, 75.18467
Int. Cl.² F16H *7/22*
U.S. Cl. 74—242 **10 Claims**

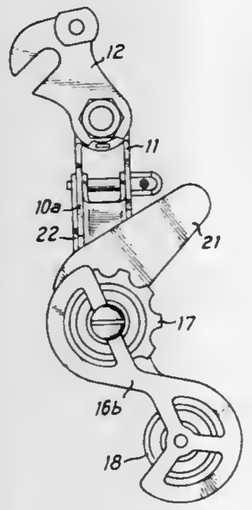

1. A derailleur bicycle gear change comprising a chain guiding device having a pivoted yoke carrying the pivots of a chain guide roller and a chain tension roller and a displacement device including a first part arranged to be fixed to the frame of the bicycle and a second part which acts as a support for the guiding device, said second part being arranged to be movable in relation to the first part in order to cause the guiding device to move transversely in relation to the rear wheel of the bicycle gear change along sprockets associated with the wheel, the guiding device incorporating a guiding member in the form of a guiding lug mounted so as to pivot in relation to said yoke in a plane perpendicular to the axis of the sprockets and common to that of a cheek of the yoke, and the gear change further comprising a mechanical linkage device connected to said displacement device and arranged to cause the guiding lug to pivot when said guiding device moves transversely so as to bring the free extremity of the guiding lug adjacent the circumference of the sprocket whose position corresponds to that of the guiding device.

4,061,049
MECHANISM FOR CHANGING LINEAR MOTION TO SUBSTANTIALLY PIVOTAL MOTION
Henry Richard Beurrier, Chester Township, Morris County, N.J., assignor to Bell Telephone Laboratories, Incorporated, Murray Hill, N.J.
Filed May 13, 1976, Ser. No. 686,069
Int. Cl.² F16H *1/14*
U.S. Cl. 74—424.8 R **7 Claims**

1. An apparatus for generating substantially pivotal motion of an axis of a member about a remote point on the axis, comprising

means for driving a first point on the axis of the member along a straight path throughout the extent of its travel and a second point along a curved path, which paths are transverse to the axis, and

means in the driving means for correlating the motion of the driven points so as to drive the points in substantially the same direction at such differential rates of travel that the remote point on the axis, on the other side of the slower

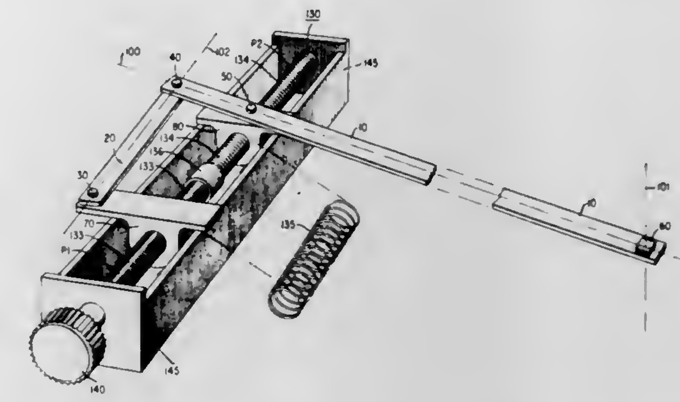

driven point from the faster, experiences minimal lateral displacement as the driven points are displaced from an initial position.

4,061,050
COMPENSATING MECHANISM
Joseph Earl Bolger, Summer St., Barre, Mass. 01005
Filed Sept. 10, 1976, Ser. No. 722,022
Int. Cl.² G05G *1/00;* B62D *3/00*
U.S. Cl. 74—469 **3 Claims**

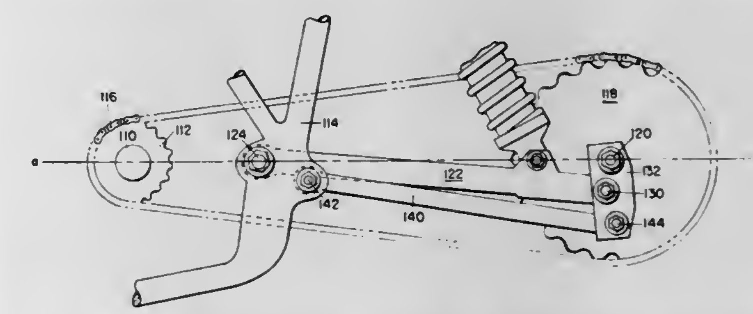

1. In a motorcycle having an engine mounted on a frame and a transmission sprocket and a rear wheel and axle and a rear wheel sprocket and driving chain, an improved suspension system including:

a trunnion rotatably mounted on the rear wheel axle,

a swing arm pivotally mounted to each of the frame and trunnion,

a compensating lever pivotally mounted to each of the frame and on the trunnion,

means for guiding vertical movement of the rear wheel by effecting a pulling force upon the lower portion of the trunnion in an inboard direction toward the pivotal connection of the compensating lever and the frame with a resultant coincidence of the rear wheel axle in its traverse of a predetermined arc in coincidence with the arc of travel of the pivotal connection of the swing arm and trunnion.

4,061,051
DEVICE FOR PEDAL OPERATING A MOTOR VEHICLE TRANSMISSION CONTROL
Ugolino Grandis, Via Bellavitis, 10/bis, Padova, Italy
Filed July 19, 1976, Ser. No. 706,643
Claims priority, application Italy, July 21, 1975, 41672/75
Int. Cl.² G05G *1/14, 9/16*
U.S. Cl. 74—474 **4 Claims**

1. A device for pedal operating a motor vehicle transmission control, particularly for motorbikes equipped with an automotive type of transmission including speed selecting and engaging mechanisms, characterized in that it comprises: a shaped shaft supported in bearings adapted to permit a limited rotational oscillation thereof, a rigidly attached pin substantially perpendicular to said shaft, a lever partially engaged with said

pin and provided with an operative end substantially intersecting said shaped shaft rotation axis, one arm projecting rigidly from said shaft and having an operative terminating portion, a resilient bias means effective to make said shaft substantially stable at the oscillation extremes thereof, and a pedal set rigidly

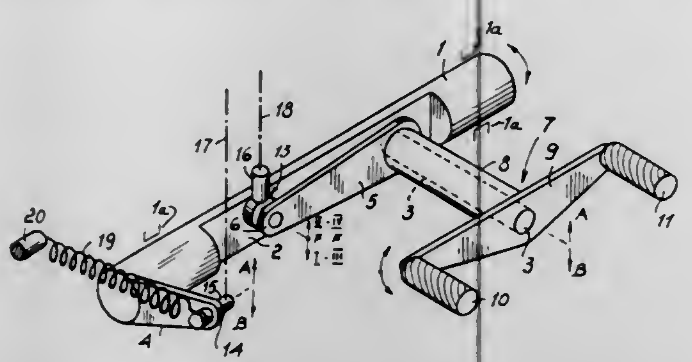

attached to said lever and adapted to permit both the rotation of said lever and the oscillation of said shaped shaft, said operative terminating portion and said operative end being repectively connected to said speed selecting mechanism and speed engaging mechanism.

4,061,052
DEVICE FOR SHIFTING BETWEEN FINE AND COARSE STEERING OF VEHICLES COMPRISING A FRONT AND A REAR VEHICLE PART
Eric Arnoldsson, Soderhamn, Sweden, assignor to Kockums Industri Aktiebolag, Soderhamn, Sweden
Filed Apr. 30, 1976, Ser. No. 682,011
Claims priority, application Sweden, May 6, 1975, 75052670
Int. Cl.² B62D *1/20*
U.S. Cl. 74—498 **16 Claims**

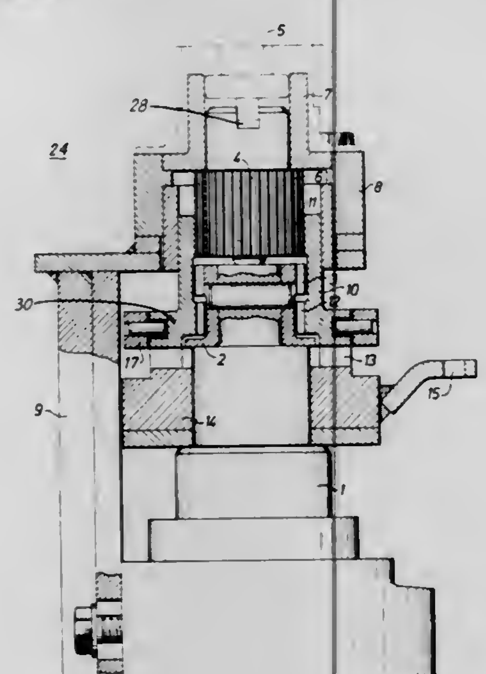

1. A device for shifting between fine and coarse steering operations for vehicles comprising front and rear vehicle parts articulately joined with each other, hydraulic steering cylinders disposed between said two vehicle parts for angularly displacing the vehicle parts relative to each other for accomplishing the steering of the vehicle, a first valve being adapted to control the fluid flow to the steering cylinders in order to provide for the fine steering of the vehicle, and a second valve being adapted to control the fluid flow to the steering cylinders to provide for the coarse steering, the improvement comprising:
a shifting means, which is shiftable between two positions and is adapted in a first position to connect an actuator, provided for the steering of the vehicle, to the first valve, and a second position to connect the actuator to the second valve,
said shifting means and said valves being arranged so that with the shifting means in the first position, a mutual angular displacement of the vehicle parts is obtained which is proportional to the movement of the actuator, and with the shifting means in the second position, a continuous angular diaplacement of the vehicle parts is obtained as long as the actuator is moved from a predetermined initial position.

4,061,053
VEHICLE SERVICE BRAKE PEDAL
Derek K. Keene, and Walter R. Hinde, both of Philadelphia, Pa., assignors to Eaton Corporation, Cleveland, Ohio
Filed Aug. 25, 1975, Ser. No. 607,179
Int. Cl. G05G *1/14*
U.S. Cl. 74—512 **10 Claims**

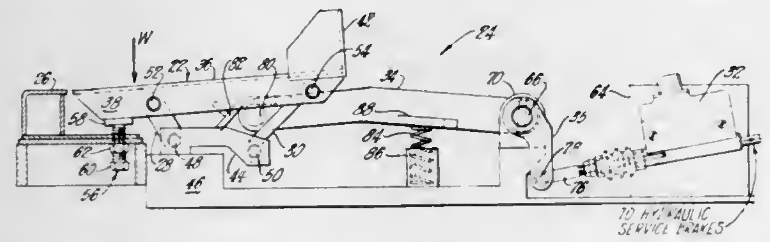

1. In a brake system for a vehicle including brake actuator means operable to apply a brake application force signal to the wheel brakes of said vehicle, said vehicle including a frame and an operator's station defined by said frame, said actuator means including an input member movable between a brake released position and a brake applied position: a pedal operatively mounted on said frame within said operator's station, means operatively connecting said pedal to said input member for moving said input member between said brake released position and said brake applied position, and linkage means supporting said pedal for movement between a brake released position and a brake applied position, said linkage means being effective to maintain said pedal in its brake released position when the effective force applied to said pedal is applied to a first region of said pedal and to permit movement of said pedal to its brake applied position when said effective force is applied to a second region of said pedal; said linkage means comprising a first link member having a first end pivotally mounted to the frame of said vehicle and a second end pivotally attached to said pedal at a first angle to the vertical with respect to said first end when said pedal is in said brake released position, and a second link member spaced forward of said first link member and having a first end pivotally attached to the frame of said vehicle and a second end pivotally attached to said pedal at a second angle to the vertical with respect to said first end when said pedal is in said brake released position, said second region of said pedal being located forward of said second end of the first link member.

4,061,054
STEERING WHEEL
Josef Wenninger, Vorsfelde, Germany, assignor to Volkswagenwerk Aktiengesellschaft, Germany
Filed July 9, 1976, Ser. No. 704,095
Claims priority, application Germany, July 9, 1975, 2530594
Int. Cl.² G05G *1/10;* **B62D** *1/18*
U.S. Cl. 74—552 **8 Claims**

1. A steering wheel comprising a hub having an axis, a rim, spokes interconnecting said hub with said rim, and a deformation member, interposed between said spokes and said hub and surrounding said hub, for permitting said steering wheel to tilt upon impact by a vehicle operator, said deformation member having the form of a flat plate having a plurality of lines of reduced strength on all sides of said hub, each of said lines

interconnecting first and second end points, said first end point for each line being at a different radial distance from said hub

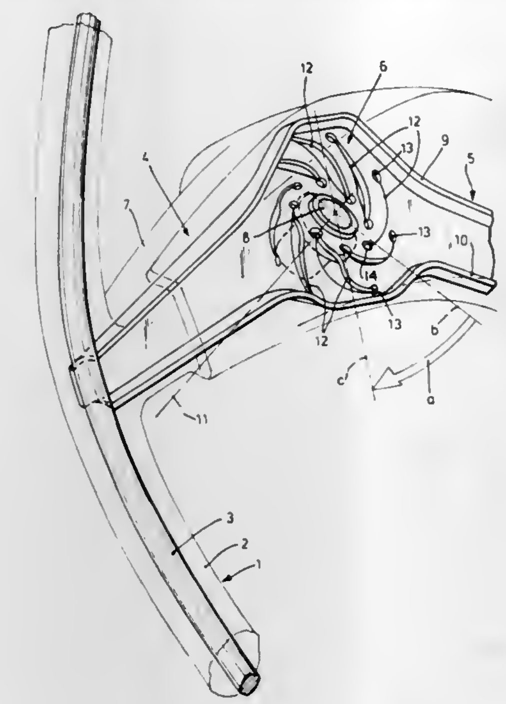

axis and at a different angle with respect to said hub axis than said second end point.

4,061,055
FUEL INJECTION CONTROL SYSTEM FOR AN INTERNAL COMBUSTION ENGINE OF A VEHICLE
Haruhiko Iizuka; Junichiro Matsumoto, both of Yokosuka, and Fumiaki Kato, Yokohama, all of Japan, assignors to Nissan Motor Co., Ltd., Yokohama, Japan
Filed Aug. 27, 1976, Ser. No. 718,189
Claims priority, application Japan, Aug. 28, 1975, 50-103474
Int. Cl.² B60K *41/18;* **F02B** *3/00, 77/00*
U.S. Cl. 74—866 **10 Claims**

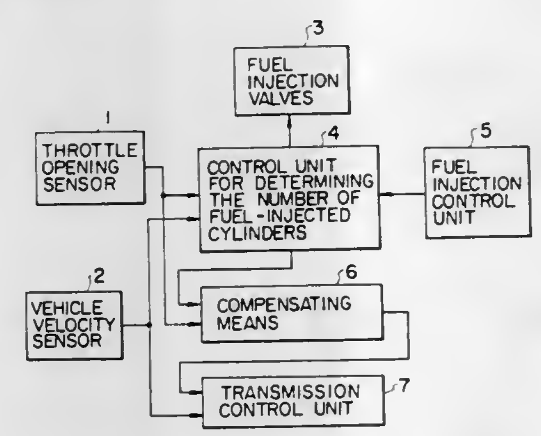

1. A fuel injection control system for use with an electronic type of automatic transmission system for an internal combustion engine of a vehicle, said electronic automatic transmission system including a transmission control unit for generating a signal representative of a proper shifting of gears,
said fuel injection control system comprising in combination:
a plurality of injection means respectively provided at corresponding cylinders of the engine;
a first sensor for sensing the opening degree of a throttle to generate a signal representative thereof;
a second sensor for sensing vehicle velocity to generate a signal representative thereof, which second sensor is connected to said transmission control unit supplying the same with the signal;
a control unit connected to said first and said second sensor receiving the signals therefrom for determining the number of cylinders to which fuel is injected, and controlling said plurality of injection means connected thereto; and
compensating means connected to said first sensor for receiving the signal therefrom and also connected to said control unit for receiving a signal representative of the number of the cylinders to which fuel is injected, and generating a signal representative of the opening degree of the throttle under the condition that fuel is injected to all of the cylinders, regardless of the number of the cylinders to which fuel is actually injected, said compensating means connected to said transmission control unit for supplying the same with the signal therefrom, whereby said transmission control unit determines the proper shifting of gear ratios based on the signals from said compensating means and said second sensor.

4,061,056
METHOD OF MAKING OUTER BLADES FOR ELECTRIC SHAVERS
Yoshimitsu Nakamura, Settsu, Japan, assignor to Matsushita Electric Works, Ltd., Osaka, Japan
Filed Mar. 29, 1976, Ser. No. 671,581
Claims priority, application Japan, Apr. 3, 1975, 50-40859
Int. Cl.² B21K *11/00*
U.S. Cl. 76—104 R **9 Claims**

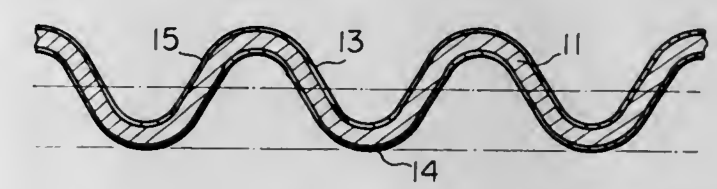

1. The method of making an outer blade for an electric shaver comprising the steps of forming a thin metal plate with a two-dimensional pattern of openings separated by lands so that each land is of arcuate section producing a smooth lower side having upwardly presented edges of metal extending in a direction away from the smooth side, grinding the upwardly presented edges to the same level to sharpen them accompanied by formation of fins which extend laterally from the lands into the adjacent openings, and then pressing the blade between a smooth layer of hard material on one side and a layer of resilient material on the other, the resilient material being on the finned side and the hard material being on the smooth side, so that the surface of the resilient material bulges locally through the individual openings to break off the fins with the result that each opening is bounded by clearly defined sharpened edges.

4,061,057
METHOD FOR ATTACHING CUTTING TIPS TO CUTTING TOOLS
Gorman D. Gray, Eagle Creek, Oreg., assignor to Lifetime Carbide Company, Colton, Oreg.
Division of Ser. No. 637,841, Dec. 5, 1975, abandoned. This application June 23, 1976, Ser. No. 699,165
Int. Cl.² B23D *63/00*
U.S. Cl. 76—112 **6 Claims**

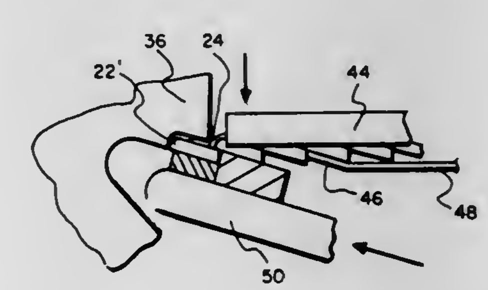

1. A method of manufacturing cutting blades of the type having a series of spaced teeth formed therein and a respective pre-formed cutting tip attached to each tooth, each of said pre-formed cutting tips on said blades having a pre-formed contact surface attached to a respective tooth and a pre-formed

cutting edge separate from said contact surface oriented in an operative cutting position, said method of manufacturing said blades comprising:

a. prior to attaching said pre-formed cutting tips to said teeth of said blades, holding said respective pre-formed cutting tips in attached relation to one another in an adjoining series forming an elongate strip of said pre-formed cutting tips;

b. positioning the pre-formed contact surface of one of said cutting tips located on one end of said strip in close proximity with a tooth of a respective blade;

c. joining the pre-formed contact surface of said end cutting tip operatively to said tooth such that the pre-formed cutting edge of said end cutting tip is in said operative cutting position; and

d. detaching said end cutting tip from the remainder of said elongate strip of pre-formed cutting tips.

4,061,058
LOCKING HUB TOOL
Thomas P. Douglas, 3531 E. Coolidge, Phoenix, Ariz. 85018
Filed July 22, 1976, Ser. No. 707,851
Int. Cl.² B25B *13/02;* **B25F** *1/00*
U.S. Cl. 81—90 C **4 Claims**

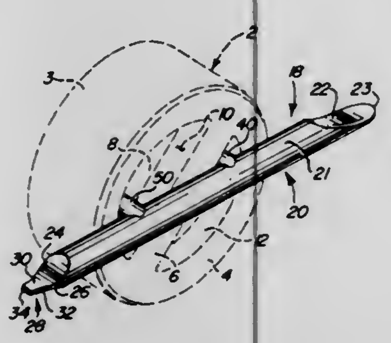

1. A combination tool for use with four wheel drive vehicle hubs having a pair of recesses separated by a web comprising, in combination:

handle means including a cross member having a top portion and a bottom portion and a side portion extending between the top portion and the bottom portion defining a handle and having a first end and a second end spaced apart axially from each other;

a pair of pins secured to and extending outwardly substantially perpendicular to the top portion and the bottom portion from the side portion of the cross member and spaced apart from each other and disposed substantially parallel to each other for respective insertion into the pair of recesses of the hub;

a first end on the cross member terminating at a first point and including a first recess adjacent the first point and extending upwardly from the first point to the top portion of the cross member for receiving a thumb or finger of the user for rotating the cross member and defining a scoop for cleaning the recesses of the hub for insertion of the pins into the recesses, and

a second end of the cross member terminating at a second point and including a second recess adjacent the second point and extending upwardly from the second point to the top portion of the cross member for receiving a thumb or finger of the user for rotating the cross member and defining a blade for cleaning the recesses of the hub for insertion of the pins into the recesses.

4,061,059
UNDERCUTTER ATTACHMENT
Dale L. Keller, Gettysburg, Pa., assignor to Richard H. Sheppard, Hanover, Pa.
Filed Mar. 17, 1976, Ser. No. 667,798
Int. Cl.² B23B *1/00, 5/00*
U.S. Cl. 82—1 C **10 Claims**

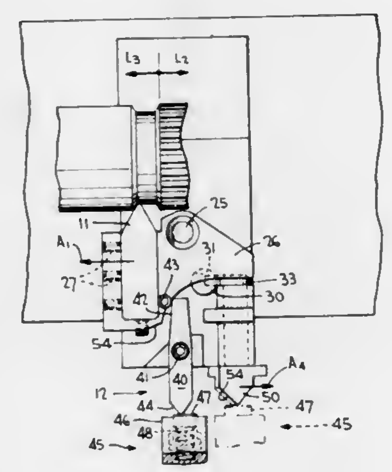

1. An undercutter attachment for a machine tool for operating on a rotating workpiece in forming an undercut portion upon said workpiece relative to an enlarged diameter portion of said workpiece, comprising:

a base,

feed means for providing relative movement between said base and said workpiece,

a movable toolholder mounted on said base,

a tool carried by said toolholder for cutting said workpiece, and

actuator means for engaging said tool at a predetermined position in response to one direction of feed movement, moving said tool in a single step from an inoperative position which is clear of said enlarged diameter portion of said workpiece to an operative undercutting position, holding said tool in said undercutting position over an extended length of feed movement, and disengaging said tool in a single step from said operative undercutting position to said inoperative position clear of said enlarged diameter portion of said workpiece in response to return feeding in the opposite direction.

10. The method of undercutting a rotating workpiece on a machine tool in order to form an undercut portion upon said workpiece relative to an enlarged diameter portion of said workpiece comprising the steps of:

relatively feeding in one direction a cutting tool axially with respect to said workpiece,

maintaining said tool at an inoperative position out of the path of said workpiece so as to avoid cutting over an enlarged diameter length of said workpiece,

moving said tool in a single step from said inoperative position to an operative undercutting position against said workpiece after passing said enlarged diameter length in response to said movement,

continuing to feed said tool relative to said workpiece so as to provide an extended undercut,

relatively return feeding said workpiece and said tool in the opposite direction, and

disengaging said tool in a single step from said operative undercutting position to said inoperative position during return feeding in response to said movement.

4,061,060
AUTOMATIC MULTISPINDLE TURNING LATHE
Günther Trautmann, Kirchheim-Nabern, Germany, assignor to Index-Werke KG Hahn & Tessky, Germany
Filed Apr. 7, 1976, Ser. No. 674,550
Claims priority, application Germany, Apr. 22, 1975, 2517759
Int. Cl.² B23B *3/30, 9/00*
U.S. Cl. 82—3 **11 Claims**

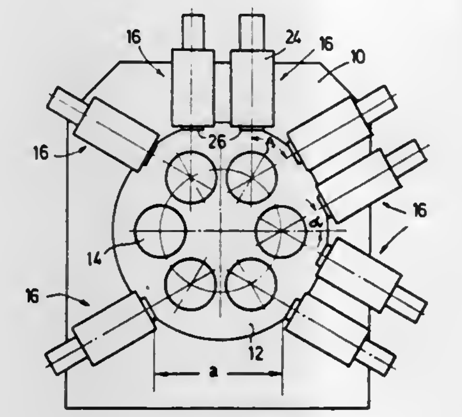

1. An automatic multispindle lathe comprising a bearing housing, a multispindle drum mounted in said housing with its axis and the axes of its spindles in parallel horizontal positions, a plurality of cross-carriage assemblies supported by said bearing housing in positions so as to be associated respectively with spindles of said drum, each cross-carriage assembly including a guide body and a cross-carriage with a longitudinal axis and guided for movement by said guide body along its longitudinal axis, the longitudinal axis of each cross-carriage being oriented to intersect the axis of its associated spindle, the front-end of each cross-carriage having a tool holder facing the associated spindle so that the direction of movement of the cross-carriage and its tool holder will intersect the axis of the associated spindle, two cross-carriage assemblies being operatively associated with at least one of said spindles with the longitudinal axes of the cross-carriages thereof being positioned relative to each other at an acute angle sufficient to enable their tool holders to be advanced simultaneously to the spindle.

4,061,061
AUTOMATIC TURRET LATHE
Heinrich Lahm, Esslingen-Sirnau, and Dieter Gutbrod, Aichwald-Aichschiess, both of Germany, assignors to Index-Werke KG Hahn & Tessky, Esslingen, Germany
Division of Ser. No. 691,347, June 1, 1976. This application Jan. 17, 1977, Ser. No. 760,109
Int. Cl.² B23B *13/00*
U.S. Cl. 82—2.5 **7 Claims**

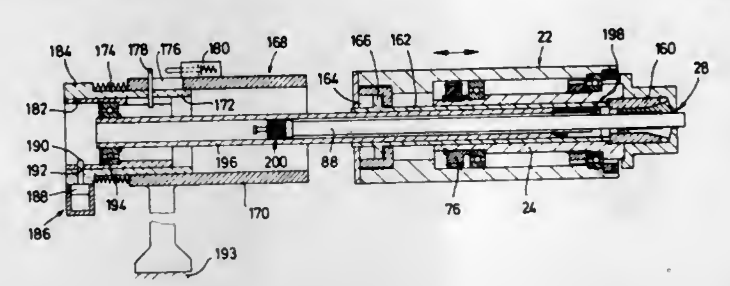

1. A lathe comprising a headstock, a live spindle supported in said headstock for rotational and axial movement, said live spindle being hollow and having a spindle head at its forward end for clampingly engaging bar stock extending through the hollow-spindle, clamp actuating means associated said spindle head for actuating said spindle heads for clamping and releasing said bar stock, and a bar stock feed and guide mechanism extending into said hollow-spindle from the rearward end thereof, said mechanism including a guide piece for the bar stock and a supporting member adapted to be mounted on the rearward end of the bar stock and supported in said guide piece, said support member and guide piece being operably coupled together so that the support member will move relative to said guide piece only during axial displacement in the feed direction of the live spindle when said spindle head is clamped onto said bar stock.

4,061,062
METHOD AND A DEVICE FOR THE AUTOMATIC REPLACEMENT OF A WORKPIECE TO BE MACHINED ON A MACHINE-TOOL
François Peltier, Ruelle, France, assignor to Moteurs Leroy-Somer, Angouleme, France
Filed Jan. 18, 1977, Ser. No. 760,375
Claims priority, application France, Jan. 29, 1976, 76.02394
Int. Cl.² B23B *13/00, 5/28;* **B25J** *3/00*
U.S. Cl. 82—2.7 **21 Claims**

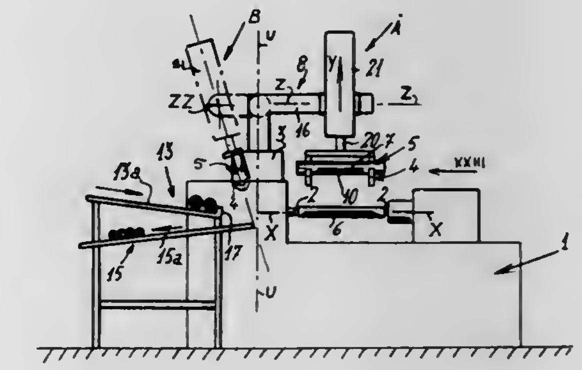

11. A device for automatic replacement of a finished workpiece by an unmachined workpiece on the work axis of a machine-tool or the like in which workpieces are clamped between centers, wherein said device comprises a frame for supporting an assembly of two superposed and rigidly associated cradles each capable of receiving a workpiece placed under the action of gravity and means for simultaneously displacing the two cradles both in height and transversely with respect to their axis in successive movements of translation which are inscribed in a plane at right angles to the work axis.

4,061,063
ROTARY SHEAR
John B. Brush, Cincinnati, Ohio, assignor to The Procter & Gamble Company, Cincinnati, Ohio
Filed Dec. 27, 1976, Ser. No. 754,421
Int. Cl.² B23D *19/06, 25/12*
U.S. Cl. 83—55 **25 Claims**

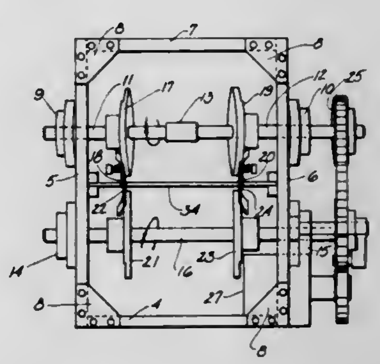

1. A rotary shear for making clean and complete cuts in a continuously moving web, said cuts being straight cuts parallel to the direction of movement of said web, straight cuts lying at an angle to the direction of movement of said web, curved cuts of combinations thereof, said shear comprising first and second rotatable shafts, a first blade support non-rotatively affixed on said first shaft, a first arcuate blade mounted on said first blade support, a second blade support non-rotatively affixed on said second shaft and a second arcuate blade mounted on said second blade support, one of said first and second blades being flexible and in part at least elastically mounted on its respective one of said first and second blade supports, said first and second blades comprising a cooperating pair of blades having

cutting edges of equal length all points along which are spaced from the axis of their respective one of said first and second shafts by the same radial distance, said blade cutting edges being configured to make the desired cuts through said web, the axes of said first and second shafts lying in parallel horizontal planes so spaced and in vertical planes which intersect at an angle such that said first and second blades are skewed with respect to each other at an angle of from about 1° to about 6° and will have single point cutting contact throughout the length of their cutting edges, and means to rotate said shafts in timed relationship so that said first and second blades will properly coact.

20. A process of making clean and complete cuts in a continuously moving web of thin, pliable, compliant, cut-resistant material, said cuts being straight cuts parallel to the direction of movement of said web, straight cuts lying at an angle to the direction of movement of said web, curved cuts or combinations thereof, said process comprising the steps of providing first and second rotatable shafts, non-rotatively affixing to said first shaft a first blade support with a first arcuate blade mounted thereon, non-rotatively affixing to said second shaft a second blade support with a second arcuate blade mounted thereon, one of said first and second blades being resilient, mounting said one of said first and second blades in part at least elastically its respective one of said first and second blade supports, said first and second blades having cutting edges of equal length all points along which are spaced from the axis of their respective one of said first and second shafts by the same radial distance, configuring said cutting edges of said first and second blades to make the desired cuts through said web, so spacing and so angling said axis of said first and second shafts that said first and second blades are skewed with respect to each other at an angle of from about 1° to about 6° and will have single point cutting contact throughout the length of their cutting edges and rotating said first and second shafts in timed relationship so that said first and second blades properly coact.

4,061,064
APPARATUS FOR FORMING HOLES IN THE FLANGES OF STRUCTURAL MEMBERS
Lee Kindgren, Rockford, and James P. Swanson, Winnebago, both of Ill., assignors to W. A. Whitney Corporation, Rockford, Ill.
Filed Dec. 1, 1976, Ser. No. 746,603
Int. Cl.² B26F *1/02*
U.S. Cl. 83—368 **23 Claims**

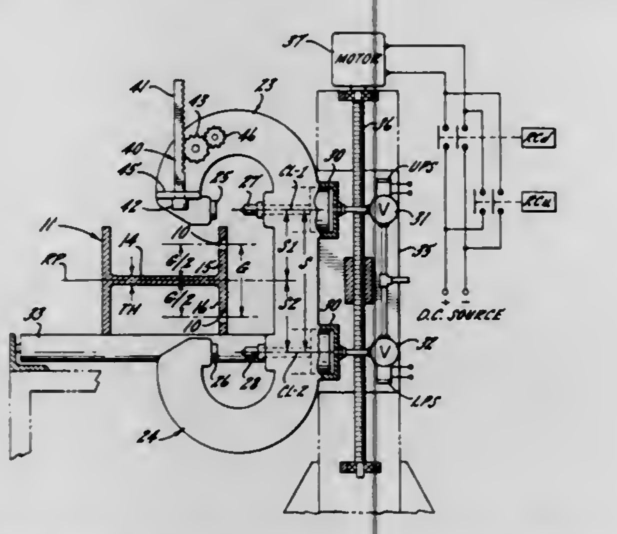

1. Apparatus for forming holes in the upright flange of an elongated structural member having a generally horizontal web joined to said flange, said apparatus comprising a generally vertically movable carriage, a tool mounted on said carriage and operable when actuated to form a hole in said flange, a probe movable vertically relative to said carriage, first mechanism selectively operable to move said probe from a first position spaced vertically from said web to a second position in contact with said web, a reversible counter, means responsive to movement of said probe for causing the count held by said counter to change by a value which is a function of the vertical distance traveled by said probe in moving from said first position to said second position, second mechanism automatically operable to move said carriage vertically after said probe has moved to said second position, said means being responsive to movement of said carriage for causing the count held by said counter to change by a value which is a function of the vertical distance traveled by said carriage, means for automatically stopping said carriage when the count held by said counter coincides with a preselected gage value representative of the desired vertical distance of said hole from a predetermined horizontal reference plane, and means for actuating said tool after said carriage has stopped.

4,061,065
CARPET CUTTING DEVICE
Baltazar Arriola, Montebello, Calif., assignor to The Raymond Lee Organization, Inc., New York, N.Y., a part interest
Filed Sept. 20, 1976, Ser. No. 724,297
Int. Cl.² B26D *5/08*
U.S. Cl. 83—562 **3 Claims**

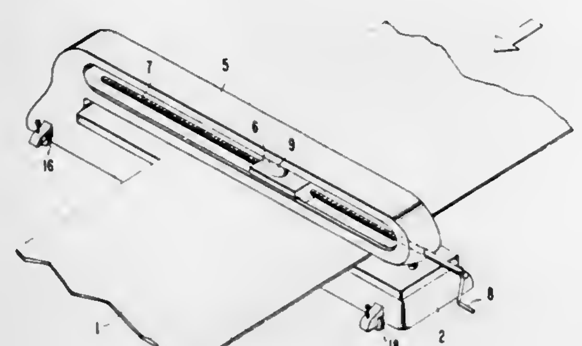

1. A carpet cutting device for cutting a piece of carpet of predetermined shape and dimensions from a larger piece of carpet, said carpet cutting device comprising

an elongated base member having spaced opposite first and second substantially parallel surfaces;

a single elongated support member mounted on the base member in spaced substantially parallel relation with the first surface of the base member in a manner whereby a carpet is passable between the base and support members, said support member having an elongated externally threaded shaft extending along the length thereof;

carriage means threadedly coupled to the shaft of the support member and manually controllable by rotation of said shaft about its axis for positioning at a desired point on the support member; and

punch means mounted on the carriage means and including a cutting member of a predetermined shape and dimensions for forcing the cutting member into the carpet with sufficient force to cut out a piece of carpet of the predetermined shape and dimensions.

4,061,066
MULTIPLE-BLADE BAND SAW
Herold Mueller, 2377 Hayman Road, Kelowna, British Columbia, Canada
Filed Jan. 24, 1977, Ser. No. 762,040
Int. Cl.² B27B *15/08*
U.S. Cl. 83—808 **5 Claims**

1. A multiple-blade band saw comprising a frame, a main shaft rotatably mounted on the frame; large intermediate and small driven wheels rotatably mounted on the main shaft for relative movement radially of said shaft; an idler wheel associated with each driven wheel, mounting means individually journalling the idler wheels upon the frame for relative movement laterally of said frame, an endless saw blade trained over each driven wheel and associated idler wheel, said saw blades providing parallel cutting runs normally radially spaced apart

with respect to the longitudinal axis of the main shaft, drive means for rotating one driven wheel, a drive train interconnecting said one and the other driven wheels to rotate all

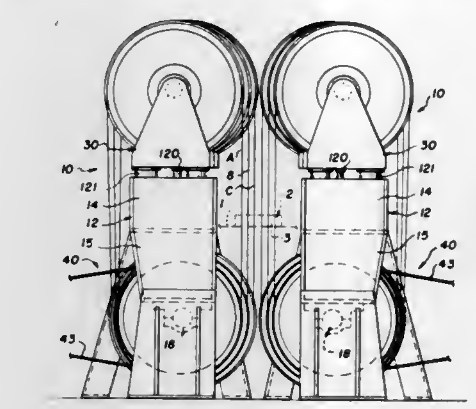

driven wheels at substantially the same peripheral speed, and adjusting means for simultaneously shifting the relative positions of the driven and idler wheels whereby to selectively vary the radial spacing between the cutting runs.

4,061,067
MODIFIED PIANO STRIKING MECHANISM
Jorge L. Carbone, 1544 Gottschall Road, Stow, Ohio 44224
Filed May 27, 1975, Ser. No. 581,026
Int. Cl.² G10C *3/18*
U.S. Cl. 84—236 **19 Claims**

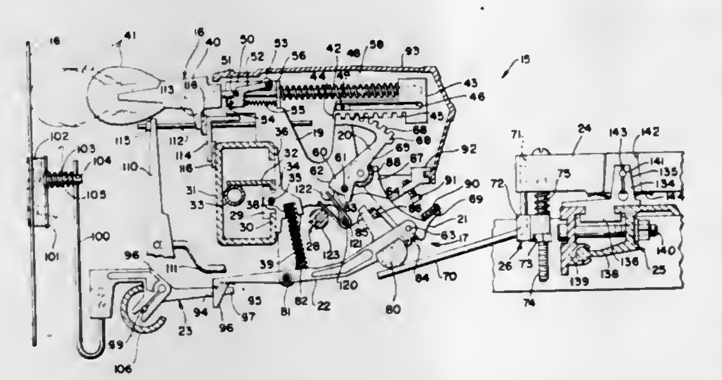

1. A striking mechanism for use in pianos and related instruments having at least one string to produce a musical note and at least one key to select the musical note comprising:

at least one hammer assembly for striking a string;

an escapement action actuated by said key;

a first lever engageable with said escapement action and said hammer assembly and interposed therebetween;

coacting gear means for imparting motion to said hammer assembly from said first lever; and,

means for supporting said hammer assembly, said escapement action and said first lever.

4,061,068
STRINGED INSTRUMENT WITH AN IMPROVED BACK PLATE CONSTRUCTION
Karl A. Stetson, R.F.D. 2, Box 182, South St., Coventry, Conn. 06238, and Carl Hugo Ågren, Saturnusvagen 86, 184 00 Akersberga, Sweden
Filed Dec. 17, 1975, Ser. No. 641,447
Int. Cl.² G10D *1/02*
U.S. Cl. 84—275 **10 Claims**

1. In a violin or the like, an improved back plate construction for the soundbox, characterized by:

a substantially flat back plate having bracing means secured to its inner face,

the bracing means comprising first and second lateral segments disposed in oppositely registering positions on opposed sides of a line of symmetry parallel to the longitudinal axia of the soundbox, and an elongated, longitudinal

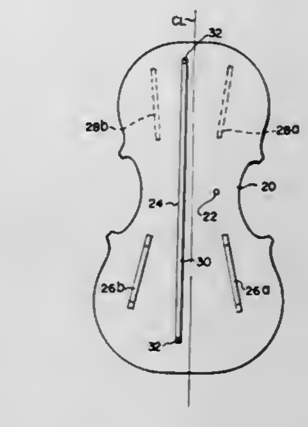

brace secured to the inner face of the back plate and disposed substantially collinear to the axis of symmetry.

4,061,069
CHORD LOCATER FOR FRETTED MUSICAL INSTRUMENT
Art H. Brackett, 404 E. Walnut, Griggsville, Ill. 62340
Filed Oct. 13, 1976, Ser. No. 731,909
Int. Cl.² G10D *3/08*
U.S. Cl. 84—315 **7 Claims**

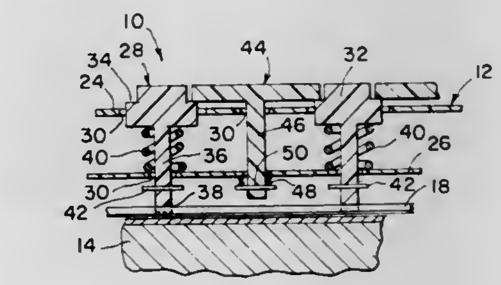

1. A chord locater adapted to be mounted on the neck of a stringed and fretted musical instrument comprising:

a keyboard;

a plurality of reciprocable buttons mounted on said keyboard in rows adjacent the frets of the musical instrument, each of said buttons having a shaft overlying one of the strings of the instrument; and

a plurality of longitudinally extending reciprocable bar keys on said keyboard having opposite ends in contact with a button in adjacent ones of said rows of buttons on said keyboard.

4,061,070
CANT STRIP MACHINE
John L. Groves, 5260 N. Genessee Road, Flint, Mich. 48506
Filed Feb. 10, 1976, Ser. No. 656,889
Int. Cl.² B27B *5/04;* **B27M** *3/02*
U.S. Cl. 83—404.4 **13 Claims**

1. A cant strip sawing machine comprising; means for sawing multiple cant strips for use in the industrial roofing trade simultaneously including a strong support frame, means on said support frame for adjustably mounting two banks of saw blade assemblies, means provided for positively feeding material to be cut lengthwise into said banks of saw blade assemblies for the purpose of producing high speed cutting of a large number of cant strips simultaneously, the means for adjustably mounting the two banks of saw blade assemblies including a plurality of transverse bars across the width of the support frame, with each bank of saw blade assemblies having individual adjustments for each respective blade assembly associated with the transverse bars, and further including intermediate drive shafts appropriately supported on the said support frame together with adjustable means between each individual saw blade

assembly and the closest associated intermediate drive shaft for permitting accurate adjustments of the width of cant strips to

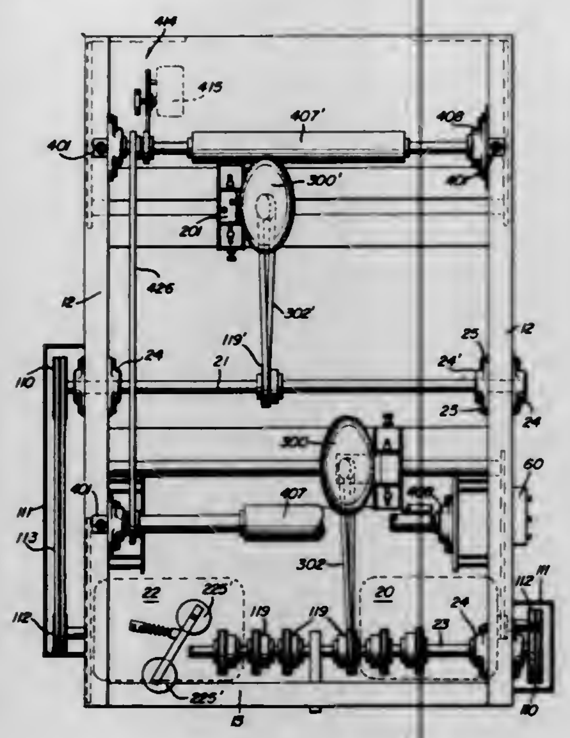

be cut as well as tension adjustments for the drive means for the saw blades.

4,061,071
STROBOSCOPIC TUNING DEVICE FOR MUSICAL INSTRUMENTS

Tucson Cameron, San Jose, Calif., assignor to Donald L. Cameron, Saratoga, Calif.
Filed May 6, 1976, Ser. No. 683,768
Int. Cl.[2] G10G *7/02*
U.S. Cl. 84—455 12 Claims

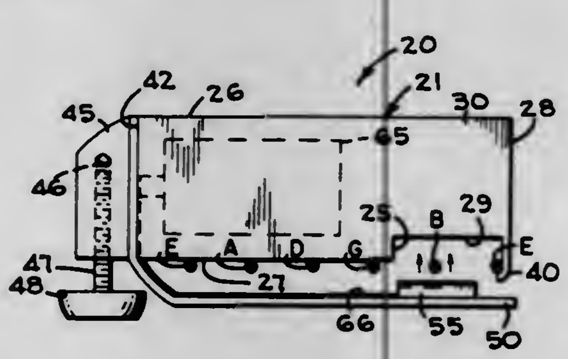

1. A tuning device for a stringed instrument comprising:
a. a source of stroboscopic light;
b. means adapted to be supported by the stringed instrument in juxtaposed relation with the strings of said stringed instrument, said source of stroboscopic light being mounted on said means for supporting said source of stroboscopic light adjacent the strings of the stringed instrument; and
c. circuit means connected to said source of stroboscopic light for exciting said stroboscopic light at a preselected frequency.

4,061,072
DEVICE TO IDENTIFY CHORDS ON A KEYBOARD INSTRUMENT AND KEY MECHANISM FOR USE THEREWITH

Juan M. del Castillo, Risco 119, Mexico 20, D. F., Mexico
Filed Feb. 10, 1976, Ser. No. 656,881
Int. Cl.[2] G09B *15/02*
U.S. Cl. 84—478 14 Claims

1. A device for identifying chords on a keyboard musical instrument comprising
chord selection means including a plurality of operators having indicia associated therewith designating the chord names to be identified;
lighting means including lamp means and fiber optic means, said lamp means including a lamp for each note of said chords, said fiber optic means including a plurality of fiber optics for each of said lamps, one end of said plurality of fiber optics for each of said lamps being located adjacent that said lamp and the other end of said plurality of fiber

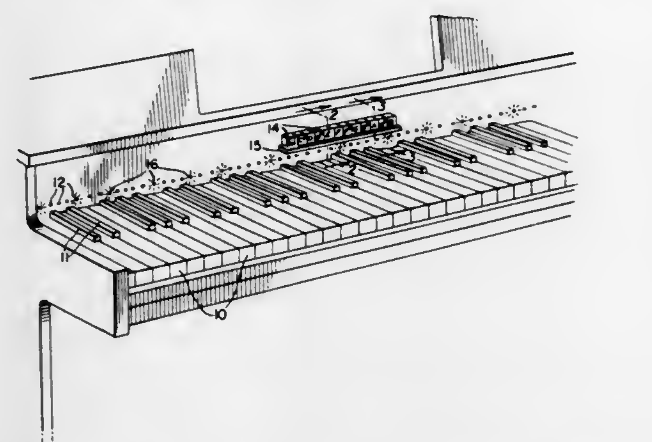

optics having individual ends of each of said fiber optics positioned adjacent a key of the keyboard in each of a plurality of octaves, having the same note name assigned to said lamp located at the opposite end of that said fiber optic;
and electrical means responsive to actuation of each of said operators to light said lamps for notes comprising the chord designated by the chord name associated with each said operator.

4,061,073
CONTROLLABLY DEFORMABLE FASTENER ASSEMBLY

Rollen G. Easter, Tremont, and James A. Hooker, Peoria, both of Ill., assignors to Caterpillar Tractor Co., Peoria, Ill.
Filed Jan. 28, 1977, Ser. No. 763,740
Int. Cl.[2] F16B *31/02;* B62D *25/06*
U.S. Cl. 85—62 16 Claims

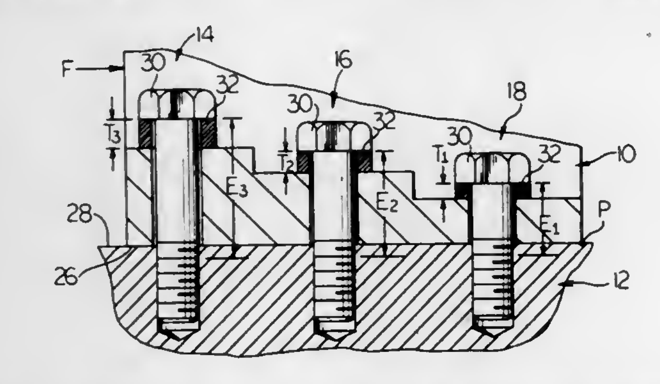

1. A controllably deformable fastener assembly, for securing a first member to a second member, comprising:
a fastener having a threaded shank portion, a head portion, and a shoulder portion on the head portion, said shank portion being of a material having a preselected tensile yield load;
clamping means including a shoulder portion for screw threadably receiving the shank portion of the fastener, moving the shoulder portion towards the shoulder portion of the fastener, and clamping the first and second members together; and,
crushable element means disposed between one of the shoulder portions and one of the members for maintaining elastic deformation in response to threaded tightening of said fastener and controlled plastic deformation only in response to a force tending to separate said members at a preselected load which is less than said preselected tensile yield load of the shank portion of the fastener.

4,061,074
AMMUNITION FEED MECHANISM

Curtis D. Johnson, Davenport, Iowa; Larry C. McFarland, Silvis, Ill., and Lonnie D. Antwiler, Fenton, Mo., assignors to The United States of America as represented by the Secretary of the Army, Washington, D.C.
Continuation-in-part of Ser. No. 610,024, Sept. 3, 1975, Pat. No. 3,999,461. This application Aug. 23, 1976, Ser. No. 716,841
Int. Cl.[2] F41D *9/02*
U.S. Cl. 89—33 CA 10 Claims

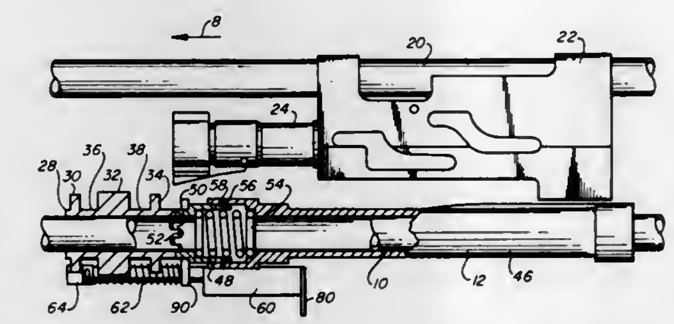

1. A belted ammunition feed mechanism for a gun having a bolt carrier, said mechanism comprising:
a rotatable sprocket,
said sprocket having first and second end rows of teeth between which rounds of ammunition may be cradled,
said sprocket having a center row of teeth both radially and axially longer than the teeth in said first and second end rows and extending between adjacent round connecting links to prevent their forward movement while associated rounds cradled between adjacent teeth are stripped forwardly and chambered by the bolt carrier on said gun,
said center row of teeth having recesses between said adjacent teeth in which the cartridge encircling portions of said links are cradled.

4,061,075
AUTOMATIC WEAPON

Frank P. Smith, 164-04 33rd. Ave., Flushing, N.Y. 11358
Filed Oct. 7, 1976, Ser. No. 730,175
Int. Cl.[2] F41C *5/02*
U.S. Cl. 89—132 8 Claims

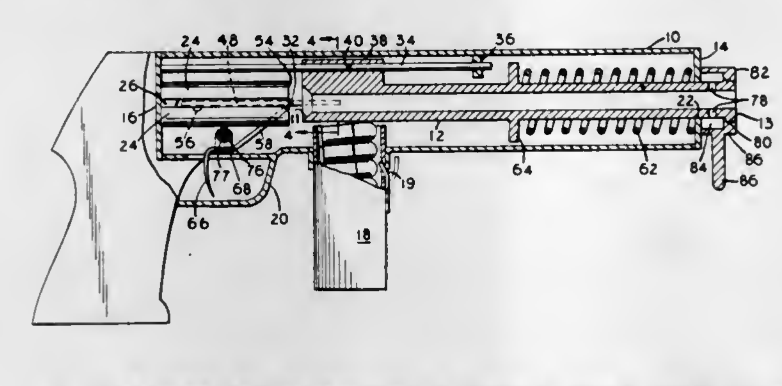

1. In a weapon: a receiver, a breech block fixed to said receiver, a barrel reciprocable within said receiver from a first position adjacent said breech block to a second position remote therefrom, spring means biasing said barrel towards said first position, trigger means associated with said receiver, a sear arm for holding said barrel in said second position, ejector guide means connected to said barrel and provided with means for engagement by said sear arm to hold said barrel in said second position, and gas cylinder chamber means externally of said barrel and in communication therewith, whereby upon firing of said weapon, the gases discharged from a cartridge ejected from said barrel, pass into said gas cylinder chamber means to thereby tension said spring means.

4,061,076
MILLING CUTTER

Donald A. Robertson, Union Lake, Mich., assignor to Indexomatic, Inc., Farmington, Mich.
Filed July 22, 1976, Ser. No. 707,884
Int. Cl.[2] B23C *5/26*
U.S. Cl. 90—11 A 10 Claims

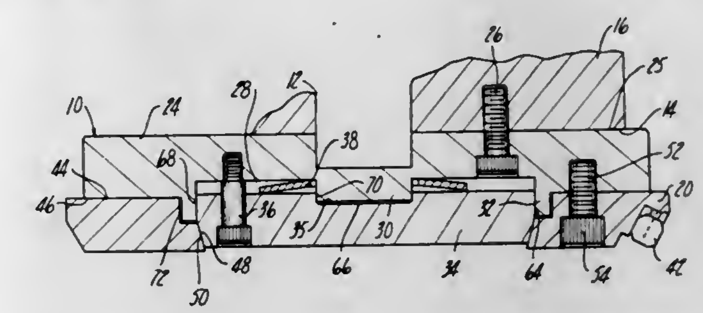

1. A milling tool comprising; an annular cutting tool, a support for said cutting tool including first and second members rotatable as a unit about a common axis, biasing means continuously urging said first and second members axially apart, said annular cutting tool being attachable to one of said members, means for attaching said cutting tool to said one of said members, the other of said members and said cutting tool including complementary annular guide surfaces engageable with each other to maintain said cutting tool concentric to said axis upon movement of said annular cutting tool relative to said one of said members.

10. A milling tool comprising; a tool support including a first member adapted for connection to a rotatable drive member, a second member connected to said first member for rotation therewith and axial movement relative thereto, a cutting tool attachable to said first member, said cutting tool and said second member including complementary guide surfaces in engagement with each other, biasing means urging said first and second members apart to maintain said guide surfaces continuously in engagement with each other to maintain said cutting tool concentric to said axis, and means connecting said tool to said first member against the action of said biasing means.

4,061,077
APPARATUS FOR FORMING LARGE COMPOUND CURVED SURFACES

Floyd R. Gladwin, 21000 E. River Road, Grosse Ile, Mich. 48138
Filed Jan. 6, 1977, Ser. No. 757,409
Int. Cl.[2] B23C *3/00*
U.S. Cl. 90—15 A 10 Claims

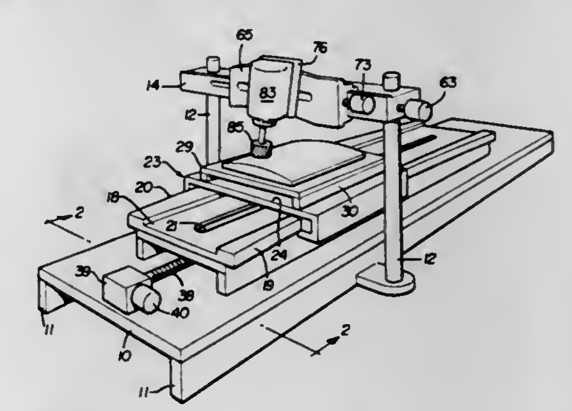

1. Apparatus for forming a large radius, compound curve surface upon a large plate-like workpiece comprising:
an elongated bed having longitudinal opposite side edges, and said edges each being curved along a large radius, vertically axised arc, with the curved edges being parallel along their lengths;
a table supported upon the bed and spanning said curved side edges, and a guide strip mounted upon each side edge of the table and being curved complementary to its respective bed edge for engagement therewith;

said table being movable in a horizontal arcuate path longitudinally of the bed due to the engagement of the guide strips with the side edges;
power means mounted upon the bed and connected with the table for reciprocating the table along the bed, wherein a flat, large plate-like workpiece may be secured to the upper surface of the table for movement therewith;
tool means mounted above the bed and located for engagement with a workpiece secured upon said table for machining the upper surface of the workpiece as it reciprocates beneath the tool means.

4,061,078
DEVICE FOR REMOVING EXTERNAL CIRCULAR FINS FROM PIPE JOINTS
Viktor Senderovich Lifshits, Kavkazsky bulvar, 21, korpus 2, kv. 41; Georgy Nikolaevich Petrov, Izmailovsky bulvar, 34/32, kv. 8; Oleg Sergeevich Papkov, Samarkandsky bulvar, 24, korpus 3, kv. 3; Vladimir Ivanovich Khomenko, ulitsa Mikluk-ho-Maklaya, 39, korpus 2, kv. 372, all of Moscow; Alexandr Yakovlevich Gerasimenko, Sovetskaya ulitsa, 11/2, kv. 75, Elektrostal Moskovskoi oblasti; Alexandr Korneevich Taradaiko, ulitsa Mira, 30, kv. 27, Elektrostal Moskovskoi oblasti; Alexandr Mikhailovich Zemchenko, ulitsa Pushkina, 18, kv. 18, Elektrostal Moskovskoi oblasti, and Ivan Petrovich Gremyakov, ulitsa Lenina, 25, kv. 9, Elektrostal Moskovskoi oblasti, all of U.S.S.R.
Filed Feb. 19, 1976, Ser. No. 659,264
Int. Cl.² B23D *5/02*
U.S. Cl. 90—24 C **2 Claims**

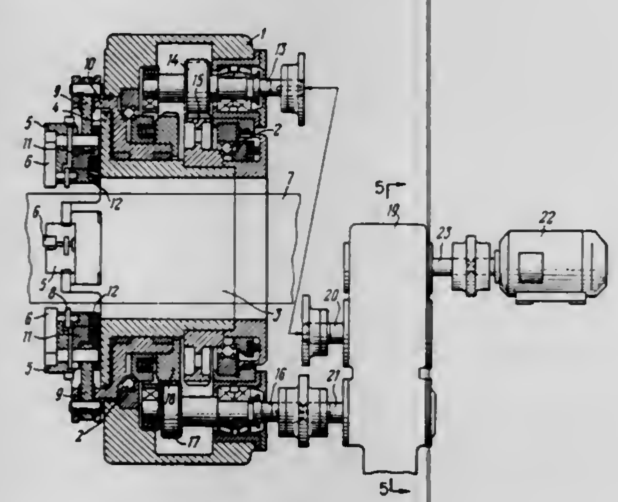

1. A device for removing external circular fins from pipe joints made by resistance butt welding, comprising: a base; a hollow rotor mounted in said base; a faceplate mounted on said rotor; carriages mounted on said faceplate, each of said carriages having a bore; a roller secured to each of said carriages and adapted to trace over the surface of the pipes under treatment; a holder fitted on said rotor rotatably therearound; springs gauged for the cutting force having one of their ends thrusting against the bottom of the bore in each said respective carriage; slide blocks, each housed in the bore of said respective carriage and adapted for radial movement and with one end interconnected with the other end of said spring; means for effecting radial traverse of said carriages including links having one of their ends articulated to said holder and the other of their ends articulated to said slide blocks; means for driving the rotor and the carriage radial traversing means including an output shaft of said driving means for driving the rotor and for actuating the carriage radial traversing means kinematically associated with said rotor; another output shaft of said driving means for driving the holder and for actuating the carriage radial traversing mechanism kinematically associated with said holder; said driving means further including means for control of the difference between the rotational speeds of said output shafts for driving the rotor and the carriage radial traversing means.

4,061,079
LOAD SENSING PULL-TYPE HYDRAULIC AMPLIFYING FLUID MOTOR
Harold R. Orth, Hinsdale, and William C. Swanson, Clarendon Hills, both of Ill., assignors to International Harvester Company, Chicago, Ill.
Filed May 4, 1976, Ser. No. 683,105
Int. Cl.² F15B *9/10, 13/10*
U.S. Cl. 91—372 **6 Claims**

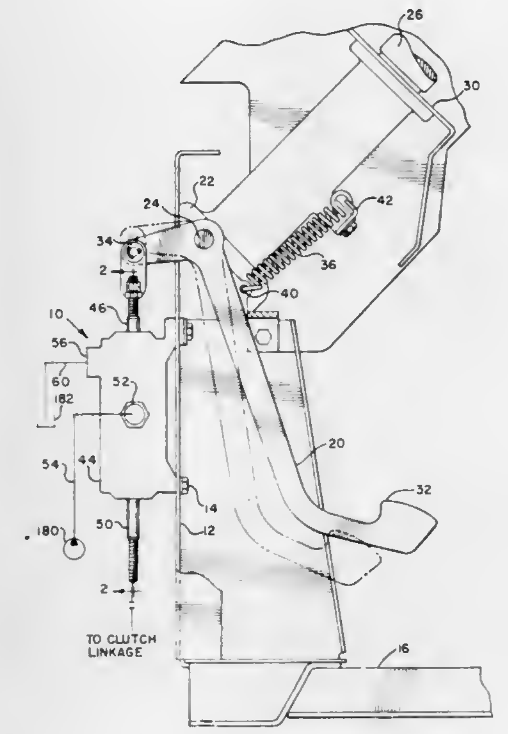

1. An amplifying fluid motor in communication with a source of fluid pressure for use in amplifying an input force to provide an output force in the direction of the input force of proportionally greater magnitude and further simultaneously providing a feedback force to the origin of the input force to indicate to the origin of the input force the proportional magnitude of the output force the amplifying fluid motor comprising:
a closed body having an inlet port in communication with the source of fluid pressure, a discharge port allowing the escape of spent fluid from said closed body, and a cylindrical chamber being surrounded by said closed body;
a power piston having a pressure side, a circumferential recess and a plurality of fluid passages including a radial fluid passage, a longitudinal passage, a lateral inlet passage (**116**), a lateral outlet passage (**120**) and a central aperture having a plurality of different diameter portions including a first portion receiving a spring and a cup, a second portion receiving a spool valve, and a third portion receiving a reaction piston;
an input rod having said smooth shaft portion, a spool valve portion capable of simultaneously blocking the radial fluid passage and the lateral outlet passage and a reactor piston portion slidably carried in the central aperture of said power piston;
an output rod having a smooth shaft portion and an enlarged portion restrained in the central aperture of said power piston;
a power piston spring biasing the power piston to an extreme of its travel in the cylindrical chamber of said body;
an input rod spring constrained on said input rod tending to urge said input rod longitudinally, toward the said output rod whereby movement of said input rod will result in movement of said output rod through the displacement of said power piston by fluid being directed through said circumferential recess, said radial fluid passage, said lateral inlet passage, and said longitudinal passage to the pressure side of said power piston.

4,061,080
POSITION REGULATOR
Nils Eskil Sundstrom, Sodertalje, Sweden, assignor to AB Westin & Backlund, Stockholm, Sweden
Continuation-in-part of Ser. No. 605,294, Aug. 18, 1975, Pat. No. 3,978,884. This application June 21, 1976, Ser. No. 697,963
Claims priority, application Sweden, Mar. 3, 1976, 7602986
Int. Cl.² F01B *7/00*
U.S. Cl. 92—13.2 **6 Claims**

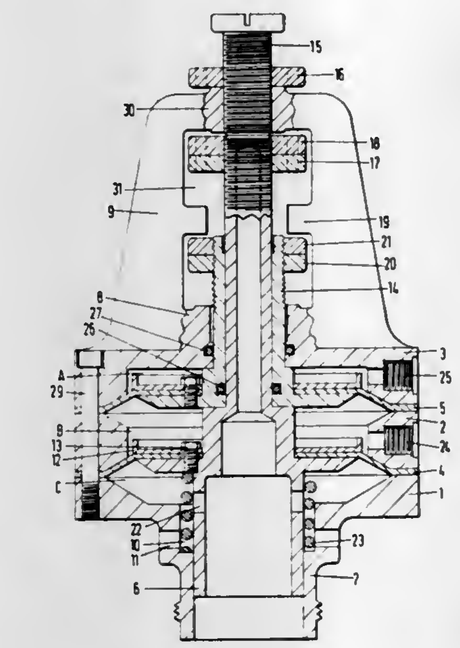

1. A position regulator comprising at least two pressure-transmitting elements (**4, 5**) which divide an internal space in said position regulator into a number of pressure chambers to which pressure medium is passed and from which pressure medium is conducted away in response to control means so as, via said pressure-transmitting elements (**4, 5**) to cause an output shaft (**6**) or the like displaceably mounted in said position regulator to adopt a number of axially determined positions in dependence upon individually adjustable stop means for respective pressure-transmitting elements, wherein said pressure-transmitting elements defining said pressure chambers comprise diaphragms (**4, 5**) or like means which are attached in mutually spaced relationship in said position regulator and which, when subjected to a force, permit axial displacement movements.

4,061,081
MACHINE FOR ERECTING FOLDED CARTONS
Albert A. Pinto, White Plains, N.Y., and Alexander J. Stanley, Milltown, N.J., assignors to Nabisco, Inc., East Hanover, N.J.
Filed Apr. 7, 1976, Ser. No. 674,375
Int. Cl.² B31B *1/76*
U.S. Cl. 93—53 SD **3 Claims**

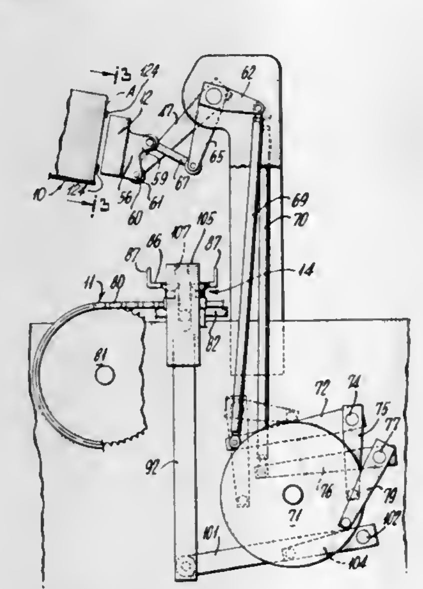

1. Apparatus for erecting folded cartons having first and second parallel panels comprising a magazine having an open end for storing flat folded and glued cartons, a vacuum head having a vacuum port area for engaging the major portion of said first panel, first vacuum exhauster means connected to said head for drawing air through said port at a low pressure of about 3 pounds per square inch and high flow rate of about 60 cubic feet per minute, means for conveying erected cartons to a loading station including an endless conveyor and a plurality of upwardly facing "U" shaped buckets, means for moving said head between a first position adjacent to the open end of said magazine and a second position adjacent said conveying means, said head being oriented in said first position with said port area facing and in close proximity to the open end of said magazine to draw a folded carton therefrom and being oriented in said second position with said port area facing said conveying means, carton opening means including a suction assembly on each side of said conveyor and frame members interconnecting said suction assemblies, the suction assemblies each including a pair of suction cups spaced along an edge of said conveyor and facing said head in said second position for engaging said second panel to grip said second panel at four widely spaced points, said suction cups engaging a total area on said second panel which is a minor portion of said second panel, second vacuum pump means connected to said opening means for drawing air through said suction cups at a high pressure of about 12 pounds per square inch and low flow rate of about 2 cubic feet per minute at each suction cup, means for moving said opening means toward said head in said second position to allow said suction cups to grip the folded carton carried by said head and moving said opening means away from said head to open said carton and place it in one of said buckets, and cam means for moving said suction assemblies along the longitudinal axis of said conveyor as they are moved between said head and said conveying means to aid in opening the carton, said cam means including a stationary vertically oriented cam track member on each side of said conveyor and a cam follower mounted on each of said suction assemblies.

4,061,082
VENTILATING AIR FILTERING AND DISTRIBUTING DEVICE
Bernard R. Shuler, Louisville, Ky., assignor to American Air Filter Company, Inc., Louisville, Ky.
Filed Oct. 20, 1975, Ser. No. 623,608
Int. Cl.² F24F *13/06;* **B01D** *31/00*
U.S. Cl. 98—40 D **15 Claims**

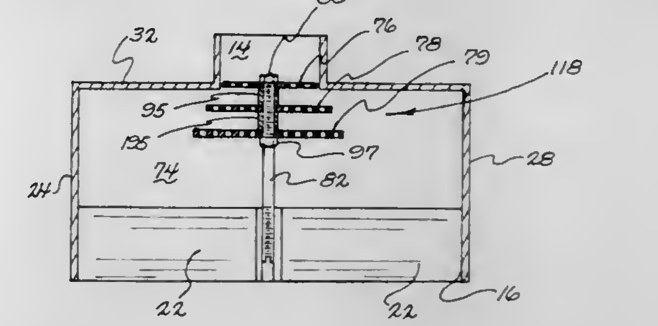

1. A ventilating air distributing device comprising:
a plenum structure defining a plenum chamber and having an inlet in one face and an outlet in the opposite face;
damper-diffuser support means attached to said plenum structures proximate said outlet therefrom;
an adjustment rod mounted to said support means and coaxially disposed relative to and extending axially toward said inlet for selective axial movement toward and away from said inlet;
at least two parallel spaced apart mutually coaxially disposed perforated plates coaxially disposed on and attached to the rod proximate the end of said rod closest to said inlet for movement toward and away from said inlet with said rod;
said perforated plate farthest from said plenum structure

inlet is larger in area than said perforated plate closet to said plenum structure inlet, and said damper-diffuser support means comprises a beam attached at its opposite ends to the side walls of said plenum structure and extends across said outlet.

4,061,083

AUTOMATIC FOOD ROASTING AND BASTING DEVICE

John Caliva, 9250 Sepulveda Blvd., Sepulveda, Calif. 91343

Filed Sept. 8, 1975, Ser. No. 611,315

Int. Cl.² A47J *37/04*

U.S. Cl. 99—345 **6 Claims**

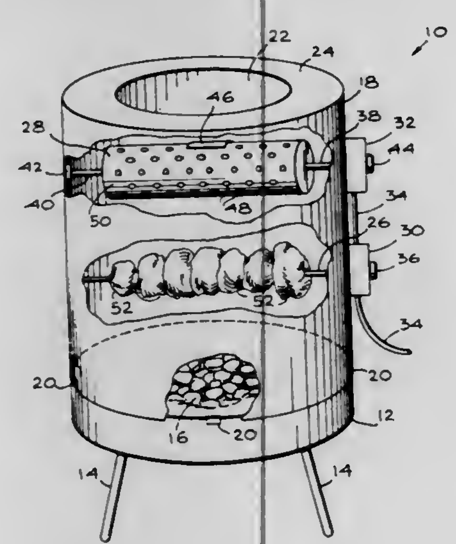

1. An improved automatic food roasting and basting device comprising, in combination:

a. roasting means, including a fire box,

b. a support member secured to and extending above said fire box,

c. a roasting spit rotatably secured to said support member,

d. a basting unit rotatably secured to said support member, above said spit,

e. said basting unit and said roasting spit each having an axis of rotation lying in a common plane which is substantially perpendicular to the plane in which the fire box lies,

f. connector means interconnecting the roasting spit and the basting unit to enable pre-selected, synchronized rotation of said roasting spit and said basting container,

g. said basting unit comprising a tubular, hollow basting container,

h. said container having a plurality of apertures extending continuously along the periphery thereof,

i. power means for continuously rotating said container around an axis of rotation generally parallel to said spit, and

j. a basting material disposed in said container, whereby said basting material is caused to pass through continuous apertures in the container and to be deposited continuously about the rotating item in the spit at a pre-determinable and variable rate of application thereon.

4,061,084

DEVICE FOR TRANSPORTING UNSTABLE STACKS OF SHEETLIKE MATERIALS

Hans Adolf Bakkeren, Barneveldseweg 89, Nijkerk, Netherlands

Filed Dec. 10, 1974, Ser. No. 531,359

Claims priority, application Netherlands, Dec. 11, 1973, 7316943

Int. Cl.² B65B *13/18*

U.S. Cl. 100—1 **4 Claims**

1. An apparatus for stabilizing an unstable stack of sheet material to facilitate the transportation thereof, which apparatus comprises a plurality of releasably interconnected support members disposed to engage respective sides of the stack over the height thereof to constrain the sheet material against edgewise slippage, said support members being positioned to provide gaps for passing strapping material about the stack, said support members having confronting inclined edge surfaces

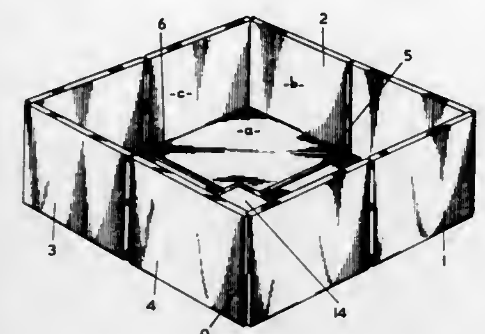

that are spreadable apart to establish said gaps when said surfaces are engaged by tensioned strapping material.

4,061,085

FLUID INJECTOR

Harold F. Farrow, Hitchin, England, assignor to Colorflo Limited, Hitchin, England

Filed July 6, 1976, Ser. No. 702,492

Int. Cl.² B41F *1/40*

U.S. Cl. 101—150 **7 Claims**

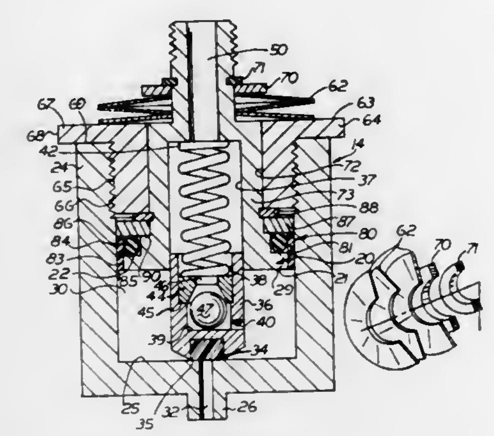

1. A fluid injector unit for delivering a charge of fluid under pressure onto a substrate comprising

a housing having a bore therein defining a fluid chamber and an outlet passage in fluid communication with said fluid chamber,

a unitary assembly means including a main piston slidably engagable with the wall of said bore of said housing, a cylindrical collar for releasably engaging said housing, and biasing means interposed between said cylindrical collar and said main piston,

said cylindrical collar having an externally threaded surface for threaded engagement with corresponding threads on an upper portion of said bore in said housing, an annular laterally-extending flange at the upper portion of said collar for contact with an upper surface of said housing, and an inner bore within said collar for guiding reciprocal movement therethrough of said main piston, and

an auxiliary piston slidably engagable in an inner bore within said main piston and having an inlet valve for permitting flow of fluid into said fluid chamber and an outlet valve for controlling flow of fluid into said outlet passage from said fluid chamber,

said unitary assembly means being removable from said housing as a unit without disassembly of said biasing means from said main piston or said cylindrical collar.

4,061,086

AUXILIARY PILE BOARD ASSEMBLY FOR PRINTING PRESSES

Friedrich Preuss, Sprendlingen, Germany, assignor to Roland Offsetmaschinenfabrik Faber & Schleicher AG., Germany

Filed June 7, 1976, Ser. No. 693,683

Claims priority, application Germany, July 6, 1975, 2525499

Int. Cl.² B41F *13/64*

U.S. Cl. 101—240 **4 Claims**

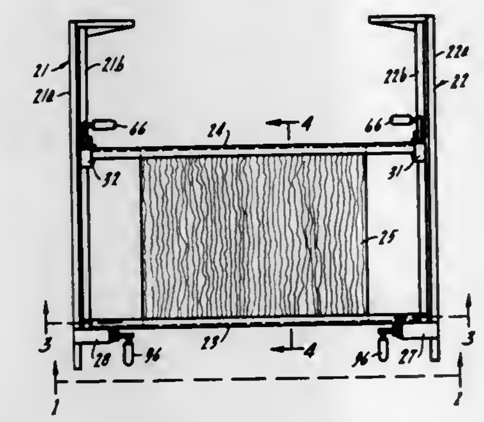

1. In an auxiliary pile board assembly for temporary occupation of spaced supports provided at the delivery end of a sheet-fed printing press, the combination comprising a pair of longitudinal rails of substantially equal length spaced parallel to one another for registering with the spaced supports, first and second cross rails of equal length, the first cross rail extending perpendicularly between corresponding ends of the longitudinal rails and secured to the latter, the second cross rail extending between the longitudinal rails parallel to the first cross rail, an auxiliary pile board of limited dimension interposed between and supported upon the cross rails, the longitudinal rails having longitudinally extending way surfaces thereon, the ends of the second cross rail being slidable on the way surfaces for purposes of lateral adjustment, the ends of the second cross rail having respective clamping members for applying pressure against the way surfaces, and means for tightening such members against the way surfaces for immobilizing the second cross rail in adjusted position with respect to the first cross rail for individual accommodation of a number of different pile boards of limited dimension proportioned to the size of the sheets being delivered by the press.

4,061,087

PLATE LOCKING STRUCTURE FOR PRESS CYLINDERS

George B. Hill, Salt Lake City, Utah, assignor to Newspaper Equipment Company, Salt Lake City, Utah

Filed Dec. 17, 1976, Ser. No. 751,276

Int. Cl.² B41F *27/06*

U.S. Cl. 101—415.1 **13 Claims**

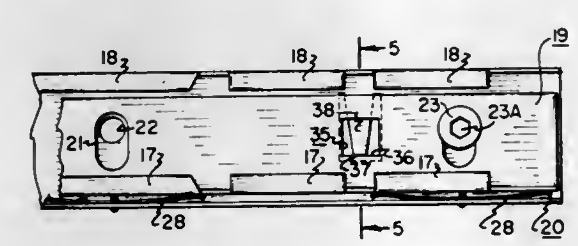

1. A structure for releasably securing an edge of a printing plate to a press cylinder over a saddle between the opposite edges of the saddle which are parallel to the longitudinal axis of the cylinder thereof, said structure being entirely contained in the region between said edges and including, in combination: an elongate base member constructed for securement to said press cylinder; an elongate locking bar aligned with, disposed over, and slideably engaging said base member and constructed for translational movement transverse to its elongate dimension with respect to said base member, said elongate locking bar having securement means for releasably retentively engaging said printing plate, said base member and said locking bar being provided with first, mutually cooperable, releasable detent means mutually engaged when said locking bar is moved in a first direction with respect to said base member to effect release of said printing plate; and spring means for slidably moving said locking bar in an opposite direction, to effect plate lock-up mounting, when said first detent means means are disengaged, said detent means and said spring means being wholly contained within said structure.

4,061,088

ELECTRIC DETONATING FUSE ASSEMBLY

Masahiro Ueda, Toyota, Japan, assignor to Toyota Jidosha Kogyo Kabushiki Kaisha, Toyota, Japan

Filed June 9, 1976, Ser. No. 694,080

Claims priority, application Japan, Nov. 13, 1975, 50-136685

Int. Cl.² F42B *3/18*

U.S. Cl. 102—28 R **5 Claims**

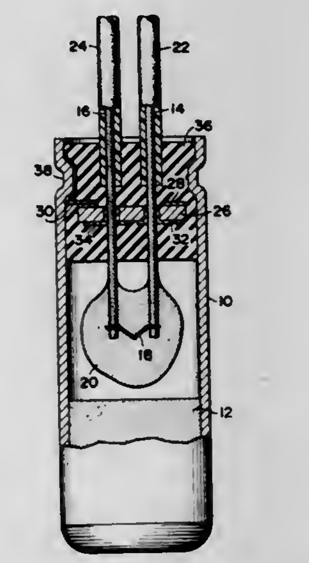

1. An electric detonating fuse assembly, comprising:

a metallic tubular body member having therein an igniting charge and an explosive charge, said body having a closed bottom end and an open neck portion;

a plug member provided in said neck portion of said body member for hermetically sealing sadi body member;

a filament disposed in the vicinity of said igniting charge;

a pair of electric leads connected to said filament through said plug member for supplying igniting current thereto; and

a non-linear resistor element disposed between said electric leads and said metallic tubular body member, said resistor element having a critical voltage point selected between a normal igniting voltage preset for normal ignition and a spark discharge voltage causing abnormal ignition due to accumulation of static electricty produced in the assembly whereby the resistor element shows a high value of resistance when applying thereto voltages smaller than said critical voltage, and a low value of resistance when voltages greater than said critical voltage are applied thereto, said non-linear resistor comprising:

a disc-shaped non-linear resistor having first and second sides and having said pair of electric leads extending therethrough;

a pair of semi-circular shaped first and second electrodes provided on said first side of said non-linear resistor and electrically coupled to a one of said electric leads; and

a circular third electrode provided on said second side of said disc-shaped non-linear resistor, said circular third electrode being configured such that it is not in contact with said pair of electric leads, said circular third electrode further being electrically coupled to said tubular body member.

4,061,089
PERSONAL RAPID TRANSIT SYSTEM
Elbert Morgan Sawyer, Box 30602, Santa Barbara, Calif. 93105
Filed Sept. 2, 1975, Ser. No. 609,787
Int. Cl.[2] B61B *13/08*
U.S. Cl. 104—23 FS **35 Claims**

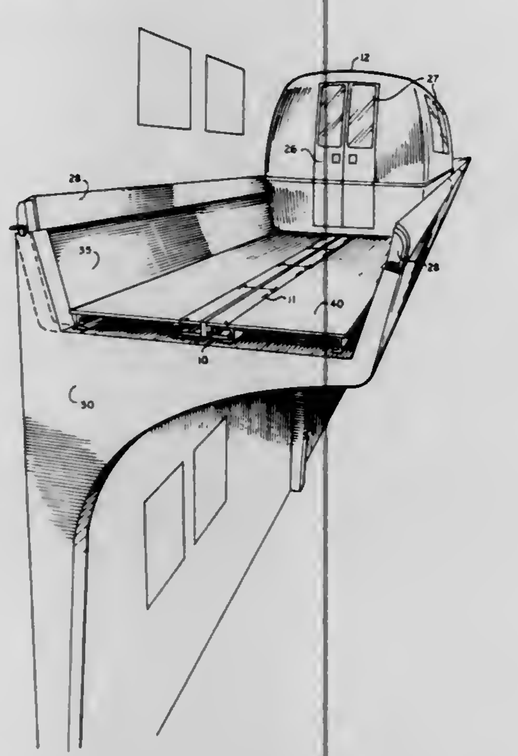

1. In a transportation system having an electrically propelled vehicle, means for controlling the speed and direction of said vehicle and propelling said vehicle comprising in combination:
a guideway including main line segments as well as ON and OFF ramp segments, which permit stations to be accessed by said vehicle;
said vehicle has a capacity of approximately 4 to 6 passengers:
support means comprising air bearings mounted on the bottom of said vehicle;
lateral support means on sides of said vehicle; said means reacting against side walls of said guideway to provide lateral guidance;
propulsion means comprising a linear synchronous motor having a primary portion of said motor embedded in the surface of said guideway;
said primary portion of said linear synchronous motor comprising segments having lengths equal to approximately half the longitudinal dimension of said vehicle;
said linear synchronous motor primary segment ends are placed in juxtaposition with each other minimizing the size of cooperating secondary members;
said linear synchronous motor having a primary winding which is excited by polyphase electric power in conjunction with an electronic control, which is adapted to apply said polyphase power on said linear synchronous motor primary segment when said vehicle passes into proper position above said segment and triggers a sensor, which detects when said vehicle is in proper position above said linear synchronous motor primary segment;
said linear synchronous motor also including field structure of the permanent magnet type which is mounted on the bottom of said vehicle; linear induction motor secondary segments mounted one on each side near said bottom of said vehicle to perform, in cooperation with primary segments mounted in guideway sides to achieve:
acceleration of said vehicle to guideway synchronous speed;
steering direction of said vehicle at points in said guideway where the guideway main line has a break in one wall to form another choice of route of travel;
dynamically braking vehicles at station stops;
a means of reducing hunting of said linear synchronous motor;
a means of generating auxiliary electrical power inside said vehicle by using a portion of the tractive effort which propels said vehicle; said means uses only variations in magnetic field intensity; said variations in magnetic field intensity caused by changes in reluctance of magnetic circuit produced by linear motion of said vehicle.

4,061,090
PLASTIC PALLET
Floyd Raymond Callon, Cincinnati, Ohio, assignor to Heckethorn Manufacturing Co., Dyersburg, Tenn.
Filed June 10, 1976, Ser. No. 694,584
Int. Cl.[2] B65D *19/32*
U.S. Cl. 108—51.1 **15 Claims**

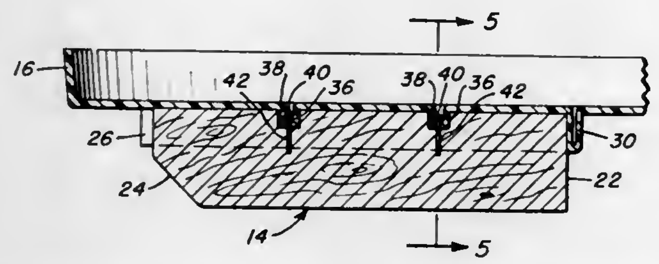

1. A pallet comprising a one-piece molded plastic platform having a planar upper load-receiving surface and a lower surface, a plurality of elongated wood skids underlying and engaged with selected portions of the lower surface of the plastic platform, said skids being in laterally spaced generally parallel relation to each other and presenting floor engaging, unencumbered planar bottom surfaces, the skids defining sliding supports for said platform of a height and spaced for the accommodation of lift equipment below said platform, and means for fixing the wood skids to the lower surface of said platform, said means for fixing the skids to the platform comprising upwardly opening notches transversely across the upper portions of the wood skids, integral hollow ribs depending from the corresponding selected portions of the lower surface of the platform and completely received within each said skid notch, each rib being elongated and substantially coextensive with the corresponding notch, fasteners engaged through said notch-received ribs and into the skids, the selected portions of the lower surface of the platform, other than said ribs, presenting planar surfaces coextensive with and engaged flat against the tops of the skids said molded plastic platform being capable of slight flexure so as to comform to a superimposed load upon the application of banding straps about the platform and load.

4,061,091
EXTENSIBLE TABLE
Edward C. Goyvaerts, Wilrijk, Belgium, assignor to N. V. Joseph Mertens International, Mortsel, Belgium
Filed Oct. 18, 1976, Ser. No. 733,281
Claims priority, application Belgium, Nov. 10, 1975, 254651
Int. Cl.[2] A47B *1/02*
U.S. Cl. 108—84 **1 Claim**

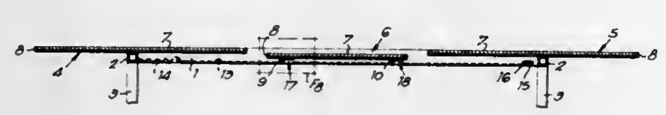

1. An extensible table construction including in combination:
a table frame having hollow side members each with two spaced vertical guide slots and with a horizontal guide slot in their inner surfaces;
two table end sections slidably mounted between said side members;
a vertically movable central leaf having two outwardly directed first protrusions on each of its sides, said protrusions being engaged in said vertical guide slots of said side members;
a pair of operating slides slidably mounted in respective ones of said side members and having at the location of each of said first protrusions thereof an elevated portion with two upwardly converging sides and a horizontal top part, said slide having at its one end a second protrusion engaged in said horizontal slot of the side member wherein the slide is slidably mounted;
a pair of springs each attached between said frame and another end of a respective one of said slides, said springs continuously urging said slides towards their operative position wherein said first protrusions are located on the top parts of said elevated parts of said slides, said second protrusions occupying end positions in said second guide slots and the upper faces of said end sections and of said leaf being located in the same plane, said operative position being reached when said slides are released to be displaced by said springs when said central leaf is lifted upwardly.

4,061,092
SUSPENDED SHELF BRACKET
Arnold Ralph Jacobsen, Arlington Heights, and I. Pompe Jaffe, Skokie, both of Ill., assignors to Skyhook Sales Corporation, Niles, Ill.
Filed July 29, 1976, Ser. No. 709,808
Int. Cl.[2] C08B *1/00*
U.S. Cl. 108—149 **4 Claims**

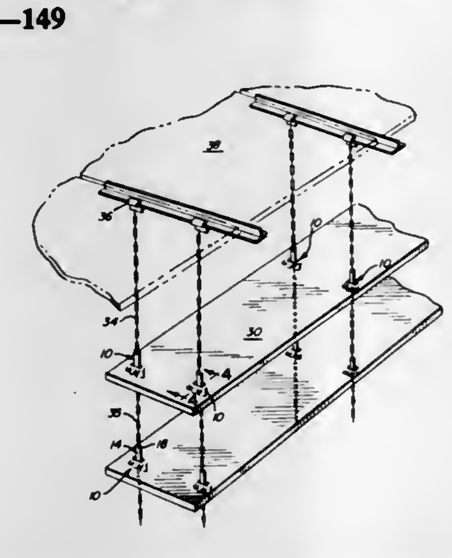

1. A bracket adapted for the support and suspension of a plurality of shelf platforms comprising
a support member formed by an upwardly extending rib portion forming one end of said support member and a lower extending flange portion forming the lower portion thereof,
said upwardly extending rib having a width dimension less than one-half of the width dimension of said lower extending flange portion and being positionally carried at the approximate midposition of said lower flange portion,
each of said upwardly extending rib and lower extending flange portions provided with apertures formed therein adjacent the outer ends thereof respectively,
said bracket being completed by support means mounted on said support member intermediate said upwardly extending rib portion and said lower extending flange portion,
said support means formed by a pair of support fingers extending laterally outwardly and in normal relation with respect to said rib and flange portions respectively,
whereby a plurality of said shelf brackets may be employed to freely suspend a shelf platform by inserting said rib portion of said shelf bracket through an aperture provided in the shelf platform until the lower surface of the shelf platform is supported by said support means extending laterally outwardly from the support member, and said upper and lower apertures provided in said rib portion and flange portion respectively accommodating the insertion therein of a suspension cable whereby the cable extending upwardly from said rib portion interconnects with the support structure positioned thereabove while the cable extending from the aperture in said flange portion downwardly supports the next freely suspended shelf platform therebelow.

4,061,093
TELLER PROTECTION UNIT
Bernard A. Carstens, Jr., Cedar Lake, Ind., and Robert L. Carstens, Palos Heights, Ill., assignors to Chicago Bullet Proof Equipment Company, Park Forest, Ill.
Filed Apr. 12, 1976, Ser. No. 675,720
Int. Cl.[2] E05G *7/00*
U.S. Cl. 109—19 **4 Claims**

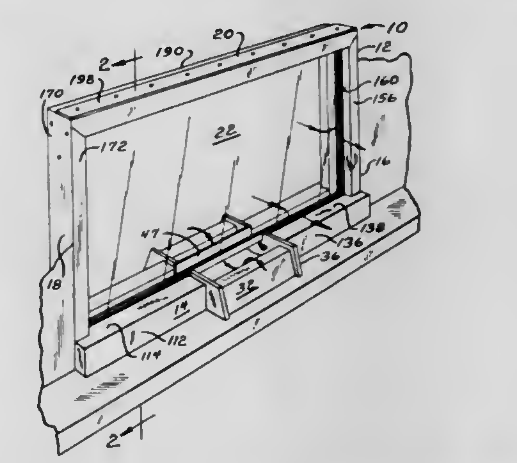

1. A teller protection unit comprising: a first channel base; a second channel base positioned adjacent to said first channel base; a first plurality of Z-clips connected to said first channel base; a second plurality of Z-clips connected to said second channel base; a first center channel connected to said first plurality of Z-clips, said first center channel and said first channel base defining a portion of a bottom sound path; a second center channel connected to said second plurality of Z-clips, said second center channel and said second channel base defining another portion of a bottom sound path; a first pair of rubber bearing pads connected to said first center channel; a second pair of rubber bearing pads connected to said second center channel; a frustum-shaped deal tray connected to said first and second channel bases between said first and second center channels, said frustum-shaped deal tray being adapted to allow transmission of goods and sound through said frustum-shaped deal tray; a piece of laminated bullet-resistant glass engaging said first pair and second pair of rubber bearing pads and said tray channel, a first jamb channel connected perpendicular to said first channel base, said first jamb channel having a first pair of rubber acoustical spacers connected thereto, said first jamb channel being positioned in spaced proximity to a first vertical edge of said piece of laminated bullet-resistant glass, said first pair of rubber acoustical spacers resiliently engaging said first vertical edge of said piece of laminated bullet-resistant glass, said first jamb channel and said first vertical edge of said piece of laminated bullet-resistant glass defining a first side sound path; a second jamb channel connected perpendicular to said second channel base, said second jamb channel having a second pair of rubber acoustical spacers connected thereto, said second jamb channel being positioned in spaced proximity to a second vertical edge of said piece of laminated bullet-resistant glass, said second pair of rubber acoustical spacers resiliently engaging said second vertical edge of said piece of laminated bullet-resistant glass, said second jamb channel and said second vertical edge of said piece of laminated bullet-resistant glass defining a second side sound path; a back header bar connected between and perpendicular to said first and second jamb channels; a spacing bar connected to said back header bar; an angle bracket connected to said spacing bar; and a front header bar connected between and perpendicular to said first and second jamb channels, said back header bar, said spacing bar, said angle bracket, said front header bar being positioned in spaced proximity from a top

edge of said piece of laminated bullet-resistant glass, said back header bar, said spacing bar, said angle bracket, said fron header bar and said top edge of said piece of laminated bullet-resistant glass defining a top sound path; said bottom sound path, said side sound paths and said top sound path providing balanced and natural sound transmission around said piece of laminated bullet-resistant glass.

4,061,094
MAGNETIC SEED DELIVERY AUTODIBBLE PLANTER
John W. Cary, and William H. Heinemann, Jr., both of Kimberly, Idaho, assignors to The United States of America as represented by the Secretary of Agriculture, Washington, D.C.
Filed Aug. 19, 1976, Ser. No. 715,676
Int. Cl.[2] A01C *5/04*
U.S. Cl. 111—89 **4 Claims**

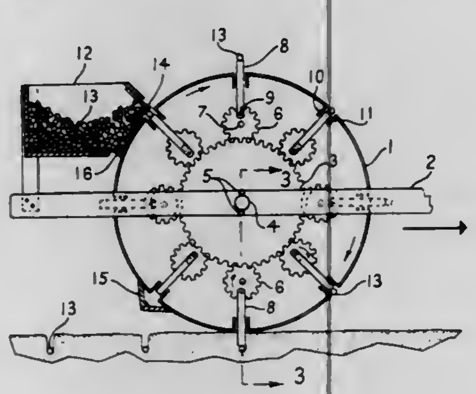

1. A device for planting seeds, comprising in combination -
a. a frame,
b. a fixed gear mounted on said frame,
c. a wheel with a concave rim rotatably mounted on said gear and having an axis of rotation passing through the center of said fixed gear, the rim of said wheel containing a plurality of slots located at the deepest point therein,
d. a plurality of drive gears rotatably mounted on said wheel and planetarily arranged around and communicating with said fixed gear, each drive gear equipped with a punch pivotally mounted thereon and cooperating with said wheel and said fixed gear such that the rotation of said wheel causes the punches to move in and out of the wheel through the slots therein and such that the punches are fully extended when they are perpendicular to and when they are parallel to the soil surface and fully retracted when they are at points midway between perpendicular and parallel, each of said punches containing a magnetic tip, and
e. a seed box, filled with seeds coated with a magnetic attracting substance, mounted on said frame at a position which allows distribution of the seeds to said punches.

4,061,095
MEANS FOR MOUNTING TUFTING MACHINE HOOKS AND KNIVES
Herbert Benjamin Price, Chattanooga, Tenn., assignor to Spencer Wright Industries, Inc., Chattanooga, Tenn.
Filed Sept. 29, 1976, Ser. No. 727,829
Int. Cl.[2] D05C *15/24*
U.S. Cl. 112—79 R **5 Claims**

1. A knife block for a tufting machine supporting a multiplicity of laterally spaced knives each having a substantially rectangular body including two opposite longitudinal edges extending between two opposite faces terminating at a cutting surface at one end, said knife block comprising an elongated body member having a multiplicity of holes formed in a face thereof, a knife supporting peg having a shank received in each hole and extending from said face, at least a portion of the peg extending from the hole comprising a central web of reduced thickness from that of the shank, the width of said webs being substantially no greater than that of said shank, a seat formed in the shank at each side of the web, a knife edge positioned in each seat with a face abutting the web, a cap positioned on the

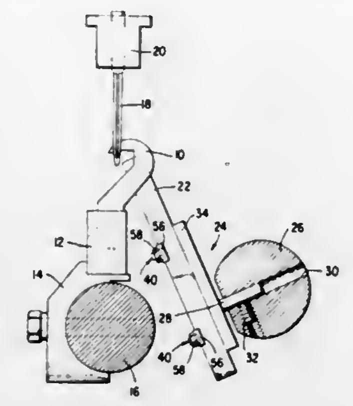

web and the other edge of each knife, and means for drawing said cap into locking engagement with said knives to secure the knives to the block.

4,061,096
QUILTED MATERIAL MENDING SYSTEM
Norman E. Elsas, Atlanta, Ga., assignor to Louisville Bedding Company, Louisville, Ky.
Filed July 9, 1976, Ser. No. 703,950
Int. Cl.[2] D05B *11/00*
U.S. Cl. 112—121.14 **12 Claims**

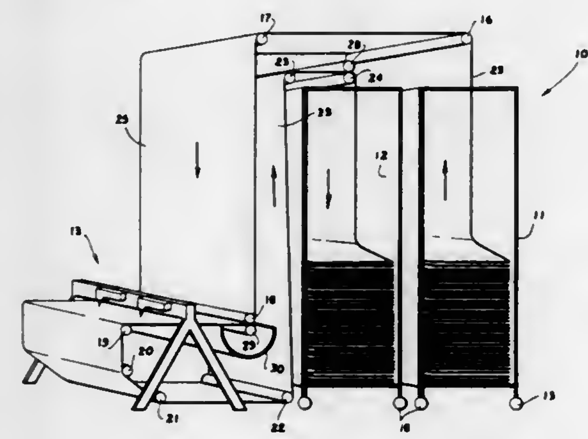

7. Apparatus for inspecting and mending elongated quilted webs or the like comprising a sewing station, means for moving a web in one direction along its length at a high speed first in a downward direction from a level higher than the sewing station toward the level of the sewing station and then laterally through said sewing station and for moving the web in the reverse direction along its length at a slower speed back through the sewing station, track means extending across the direction of movement of the web, sewing means positioned at said sewing station for sewing through the web, said sewing means comprising at least two sewing heads and stitch locking assemblies mounted on said track means, means for operating one of said sewing heads and stitch locking means in unison, and winch means connected to said sewing means for moving said sewing means along said track back and forth across the length of the web.

4,061,097
UNIT FOR AUTOMATICALLY SEWING THE OPPOSITE EDGES OF PIECE OF FABRIC
Nerino Marforio, Milan, Italy, assignor to Rockwell-Rimoldi S.p.A., Milan, Italy
Filed Sept. 29, 1976, Ser. No. 727,877
Claims priority, application Italy, Oct. 3, 1975, 27915/75
Int. Cl.[2] D05B *21/00*
U.S. Cl. 112—121.15 **2 Claims**

1. A sewing unit for stitching opposite non-parallel edges of a workpiece of the type having a work bed plate on which first and second sewing machines with their respective feeding

mechanisms are mounted in spaced relation, the improvement comprising: a device for transferring the workpiece after completion of stitching one edge thereof by the first sewing machine to the second sewing machine, said device including;
a. a pressure plate (12) mounted on the sewing unit for vertical movement toward and away from the work bed plate;
b. a retaining element (38) attached to said pressure plate (12) for engaging and retaining the workpiece after stitching by the first sewing machine;
c. rotation means defining a first drawing element (17) operatively connected to the work bed plate for vertical and horizontal movement to engage and pivot the unstitched edge of the workpiece on said retaining element (38) into alignment with the second sewing machine;

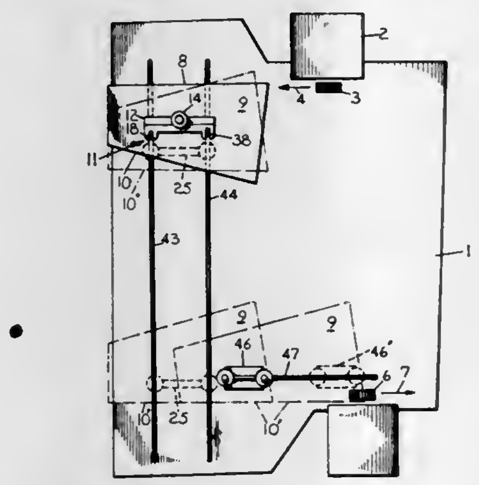

d. a position plotting element (31) carried by said first drawing element (17) including;
i. a checking element (36) fixed on the work bed plate in operative association with said plotting element (31) for controlling the limit of workpiece movement by said first drawing element (17); and
e. a second drawing element (21) connected in spaced relation to said first drawing element (17) for movement in a vertical plane to engage the workpiece and horizontally with said first drawing element (17) for releasing said retaining element (38) while moving the workpiece toward the second sewing machine.

4,061,098
PROCESS FOR BENDING METAL SHEET
Koji Horie, Toyota, and Takashi Mune, Anjo, both of Japan, assignors to Toyota Jidosha Kogyo Kabushiki Kaisha and Hosei Brake Industry Company, both of, Japan
Filed Feb. 17, 1977, Ser. No. 769,429
Claims priority, application Japan, Aug. 27, 1976, 51-101715
Int. Cl.[2] B21C *37/02*
U.S. Cl. 113—116 Q **6 Claims**

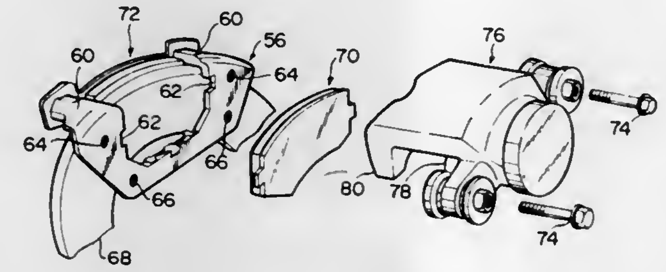

1. A process for bending a metal sheet in manufacture of a torque bearing member for a disc brake, comprising the steps of:
bending a metal sheet through an angle approximating a right angle, with an inner bend radius being greater than the thickness of said metal sheet; and
further bending the bent portion of said metal sheet by using a press through a right angle, with an inner bend radius being less than the thickness of said metal sheet, and with the opposite side-edges of said metal sheet being held fixedly,
said formed disc brake torque bearing member thus shaped to form part of an assembly including, an inner pad and an outer pad arranged on the opposite sides of a brake disc having a rotary shaft, and a caliper for urging said pads against said brake disc, and
said torque bearing member formed to include: a 'U' shaped fixing or body portion extending along one side surface of said brake disc towards the peripheral edge of said disc; and opposite side-portions extending from the opposite sides of said fixing portion over the peripheral edge of said disc transversely outwardly and provided with a pair of guide portions for guiding an outer pad slidingly, said fixing portion forming right angled bends with said outer pad guiding portions, respectively.

4,061,099
OUTRIGGER SAILBOAT
Gregory Edward Cook, 3101 South Wabash, Chicago, Ill. 60616
Filed Feb. 23, 1977, Ser. No. 771,188
Int. Cl.[2] B63H *9/00*
U.S. Cl. 114—39 **1 Claim**

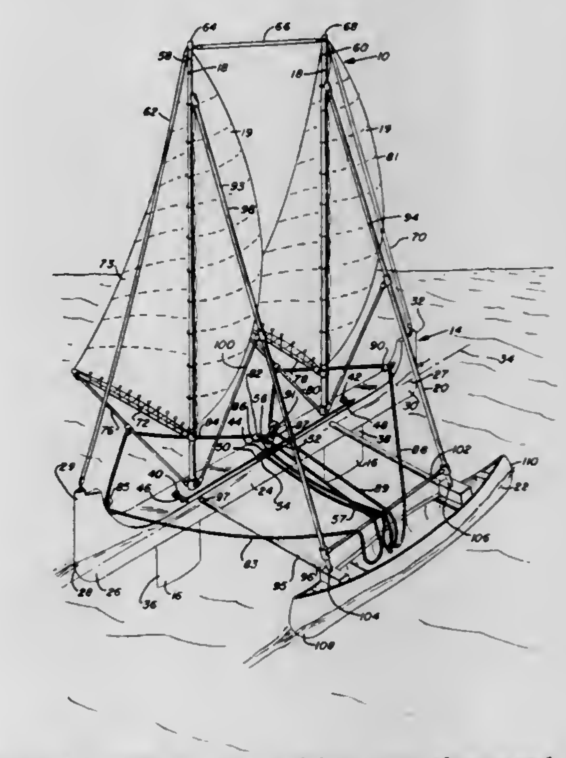

1. An outrigger sailboat comprising: an elongated drive outrigger hull having a length at least 20 times a width of said elongated drive outrigger hull, said elongated drive outrigger hull having a pair of identical wave cutting bows, said identical wave cutting bows being positioned at opposite ends of said elongated drive outrigger hull; a pair of rotatable keels rotatably connected to said elongated drive outrigger hull, said rotatable keels being rotatable in opposite directions to provide directional control to said elongated drive outrigger hull; a pair of masts mounted on said elongated drive outrigger hull, each of said masts having a rotatable boom rotatably connected thereto, each of said masts and said rotatable booms having a sail attached thereto; a closed loop boom steering device connected to each of said rotatable booms, said closed loop boom steering devices controlling angular position of said rotatable booms with respect to said elongated drive outrigger hull; a pair of angular frame connectors connected to each of said masts, each of said angular frame connectors terminating in an apex; and a symmetric load hull having a pair of identical bows at opposite ends, each of said apices being attached to said symmetric load hull, said symmetric load hull holding said elongated drive outrigger upright in the presence of a wind pressure on said sails and thereby causing said wind pressure

on said sails to drive said elongated drive outrigger and said symmetric load hull through water.

4,061,100
CONVERSION KIT FOR A SAILBOAT
Frank J. Muhlfeld, Scotch Mist II, North Pier, Thwaites Shipyard, City Island, N.Y. 10464
Filed Feb. 11, 1977, Ser. No. 767,848
Int. Cl.[2] B62B *15/00*
U.S. Cl. 114—43 **16 Claims**

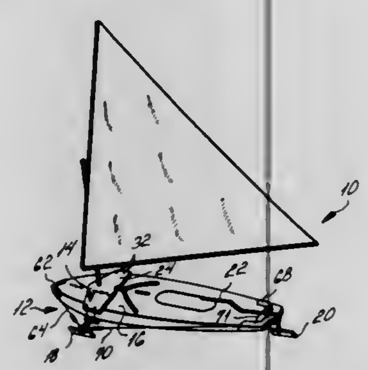

1. A kit for converting a sailboat to a vehicle capable of traversing a hard surface such as ice or the like, said kit comprising,

an elongated spar assembly adapted to be removably mounted on the hull of the sailboat intermediate the bow and stern ends thereof with the longitudinal axis of the spar assembly being substantially perpendicular to the longitudinal axis of the sailboat and with the outboard ends of said spar assembly being laterally spaced from the port and starboard sides of the sailboat, said spar assembly including a deck plate mounted across the upper surface of the hull and extending laterally therebeyond, a backing plate mounted across the lower surface of the hull and extending laterally therebeyond and fastener means for coupling the extending ends of said deck plate and said backing plate to each other whereby said spar assembly may be removably secured to the hull of the sailboat;

first and second surface engaging means mounted on said spar assembly proximate the outboard ends thereof; and

third surface engaging means adapted to be coupled to the tiller of the sailboat beneath the stern end thereof.

4,061,101
SAIL FURLING APPARATUS
Gregory Edward Cook, 3101 S. Wabash, Chicago, Ill. 60616
Filed Feb. 23, 1977, Ser. No. 771,189
Int. Cl.[2] B63H *9/10*
U.S. Cl. 114—106 **13 Claims**

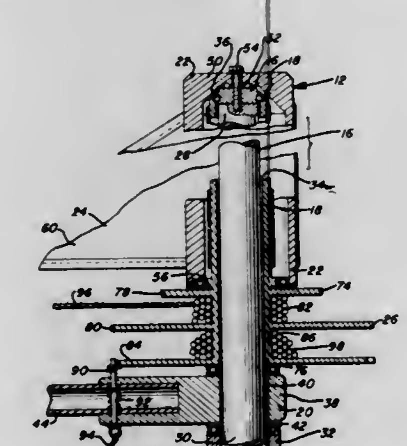

1. A sail furling apparatus for furling a sail on a mast comprising: a core; a sail sleeve rotatably mounted around said core; a sail connected to said sail sleeve; a freely rotatable exterior sheath positioned around the sail sleeve, said freely rotatable exterior sheath having a slot formed therein, said sail passing through said slot of said freely rotatable exterior sheath; a boom connected to said core and said sail; and a furling rigging connected to said sail, said furling rigging controlling an amount of sail which is drawn out of said freely rotatable exterior sheath.

4,061,102
ROLL STABILIZER FOR BOATS
Thomas B. Bissett, 5530 Topa Topa Drive, Ventura, Calif. 93003
Filed Oct. 28, 1976, Ser. No. 736,519
Int. Cl.[2] B63B *39/00, 43/02*
U.S. Cl. 114—122 **3 Claims**

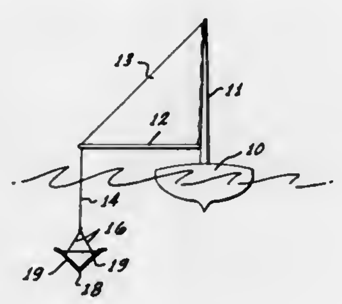

1. A stabilizer device for minimizing the roll of a boat including

two plates connected by a hinge,

a plurality of bridles attached to the plates and with the bridle supporting the stabilizer in the water so that when the stabilizer is pulled up through the water by the bridles the plates open about the hinge to resist upward motion and when the stabilizer is released the plates close together about the hinge to permit the stabilizer to fall rapidly, and

a spring attached between the plates normally pulling the plates toward the closed position to increase the speed of closing of the plates to increase the speed of fall.

4,061,103
TOWING HOOK
Johannes Josephus Mampaey, Dordrecht, Netherlands, assignor to Machinefabriek Mampaey Marine Engineering B. V., Dordrecht, Netherlands
Filed July 26, 1976, Ser. No. 708,620
Int. Cl.[2] B63B *21/60*
U.S. Cl. 114—252 **2 Claims**

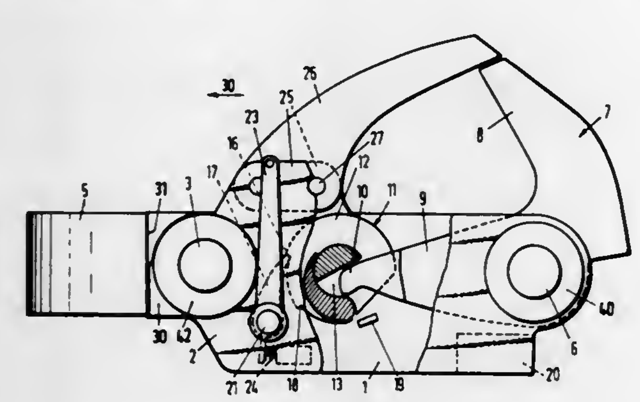

1. A towing hook device such as for mooring or towing a vessel comprising

a frame;

a towing hook mounted in the frame pivotally about a first axis and having a blocking arm with one end thereof extending from the first axis;

a blocking member mounted in the frame pivotally about a second axis and having a shaft portion reduced on one side to form an eccentric blocking step which, when the blocking member is in a blocked towing position, abuts the one end of the blocking arm and which, when the blocking member is in a release position, releases the blocking arm and towing hook;

said blocking member also including an eccentric drop-shaped or comma-shaped body mounted adjacent the reduced side of the shaft portion for co-acting with the one end of the blocking arm when the blocking member is in the release position to return the blocking member to the blocked towing position;

further said blocking member including at least one concentric locking disc having a latch projection and a limit projection;

pawl means including biasing means for engaging the latching projection to latch the blocking member in the blocked towing position; and

limit stop means mounted on the frame for engaging the limit projection to prevent movement of the blocking member past the release position.

4,061,104
HYDROFOIL VESSEL
Gifford Pinchot, III, R.D. 1 No. 58A, Jordanville, N.Y. 13361
Division of Ser. No. 572,173, April 28, 1975, Pat. No. 3,996,872. This application June 7, 1976, Ser. No. 693,506
Int. Cl.[2] B63B *1/28*
U.S. Cl. 114—281 **6 Claims**

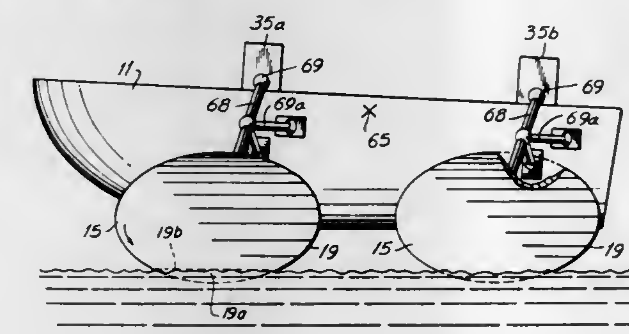

1. A hydrofoil vessel comprising, in combination:

a body portion;

at least one pair of circular members supported on opposite sides of the body portion, each of the circular members having a thin foil shaped annular peripheral portion, said circular members being positioned at an angle with respect to the water surface with a geometric segment of said circular peripheral foil portion thereof extending into the water to support the vessel when operated at its higher speeds by virtue of the forward movement of the vessel;

said segment of the annular peripheral foil portion extending into the water defining a chord which, when said vessel is viewed in plan, defines an angle with the longitudinal axis of the body portion; and

mounting means for rotatably connecting the circular members of the body portion including means for varying the said angle between the longitudinal axis of the body portion and the chord of the immersed segment of said annular peripheral foil portion of the circular members.

4,061,105
SAIL TO ROW
Onofre S. Garcia, 77 Prospect St., Newark, N.J. 07105
Filed June 30, 1976, Ser. No. 701,242
Int. Cl.[2] B63H *13/00*
U.S. Cl. 115—3 **21 Claims**

1. A sail actuated oar device for propelling a boat comprising:

A. a rotary sail structure rotatably mounted relative to the upper end portion of a shaft, normally, vertically mounted amidships of a boat, said rotary sail structure comprising, a plurality of vertically disposed, radially extending sail assemblies, fixed relative to a vertical tower means, rotatably mounted on said shaft; each sail assembly including sail panel means pivotal between first, generally planar, closed positions relative to an openwork frame assembly to cause a rotary movement of said rotary sail structure under the influence of wind forces directed against outside surfaces of said closed sail panel means, and second, open positions relative to said openwork frame assembly, accomplished by wind forces being directed against inside surfaces of said sail panel means, to permit an unrestricted movement of the wind forces through said openwork frame;

B. a power transmission means fixed relative to said rotatable tower in a spaced relation below said rotary sail structure;

C. oar means including reversible oar blade means to provide for selective forward and reverse movements of the boat;

D. means to transmit reciprocating, back and forth movement to said oar means from said power transmission means; and

E. means to selectively shift said oar blade means to accomplish the forward or reverse movements of the boat,

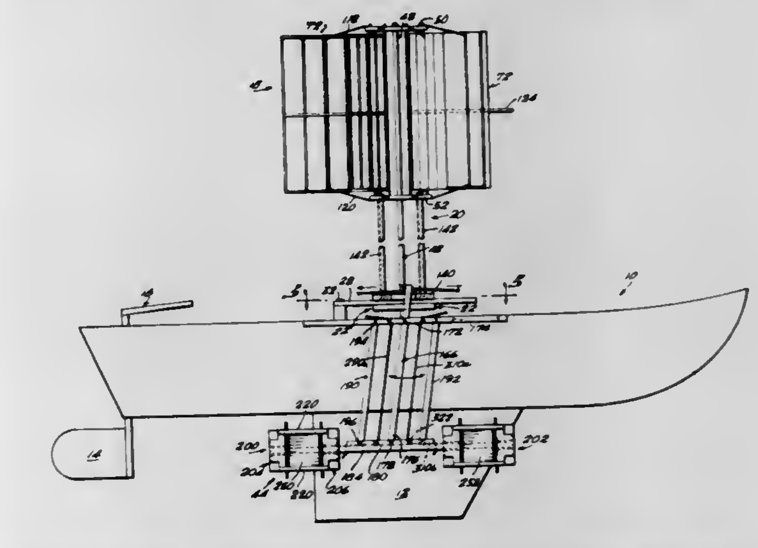

wherein each openwork frame assembly comprises inner and outer, generally rectangular peripheral frames, and at least one intermediate vertical and horizontal frame member fixed relatively to each of said peripheral frames; said outer rectangular frame is hinged for pivotal movement relative to the outer vertical side of said innter rectangular frame, and including a radially extending rod fixed relative to the inner rectangular frame to contact and maintain said outer rectangular frame in radial alignment therewith when the wind forces are directed against said outside surfaces of said sail panel means and to permit said outer rectangular frame and associated sail panel means to be pivoted angularly in a downwind direction when the wind is directed against said inside surfaces of said sail panel means.

4,061,106
RACING PADDLE AND METHOD OF MAKING THE SAME
Maximilian Ware, P.O. Box 147, Rapidan, Va. 22733
Filed Nov. 17, 1976, Ser. No. 742,424
Int. Cl.[2] B63H *16/04*
U.S. Cl. 115—24.1 **9 Claims**

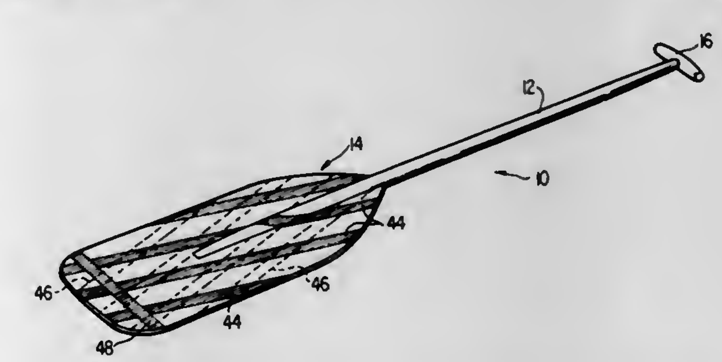

1. An extremely light-weight racing paddle comprising:

a core shaft formed of a very light-weight, easily shaped material,

a core blade, also formed of a very light-weight and easily

shaped material, secured to said core shaft, to form a paddle core structure,

an external shell formed of hardened light-weight filamentary material molded around and bonded to said core shaft for providing an external structural reinforcement thereof,

said external shell including continuous layers of said hardened light-weight filamentary material which overlap said core shaft and said core blade; and,

a pattern of reinforcing strips of hardened light-weight filamentary material bonded to said core blade for providing an external structural reinforcement thereof,

whereby an extremely light-weight, high-strength racing paddle is formed in the shape of said light-weight paddle core structure.

8. A method of making an extremely light-weight racing paddle, comprising the steps of:

forming a core shaft of a very light-weight material,

forming a core blade of a very light-weight material,

securing said core blade to said core shaft to form a core paddle structure,

coating said core paddle structure with a layer of resin for waterproofing said core,

sequentially applying carbon fiber tows along said core shaft and said core blade to form an external shell such that said carbon fiber tows overlap said core shaft and said core blade, and coating said carbon fiber tows with hardening resin.

4,061,107

CLICKER FOR INDICATING POSITION OF ARROW

Wilbur J. Smith, 133 E. Victory, Phoenix, Ariz. 85040

Filed Nov. 11, 1976, Ser. No. 740,817

Int. Cl.² G08B *3/00*

U.S. Cl. 116—67 R **6 Claims**

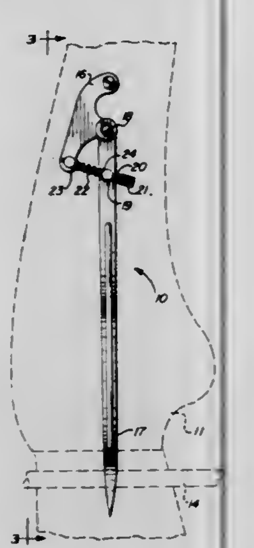

1. An arcuate bow draw check clicker comprising:

a plate mountable on the side of a bow in the arrow area,

an audible signal generating means comprising an extended arm and having a pointer end disposed to engage the shaft of an arrow, said generating means being pivotally mounted at one end thereof on said plate for generating a noise to indicate to an archer that a predetermined drawing distance of an arrow along a bow has been reached,

shaft means having one end pivotally mounted on said plate at a position spaced from the pivotal connection of said arm to said plate,

the other end of said shaft means being slidably mounted on said arm for moving laterally thereof,

tension means mounted on said shaft means and arranged to extend between said plate and the point of engagement with said arm for biasing said arm in a given direction, and

adjustment means mounted on the other end of said shaft means for varying the length of that portion of the shaft means between said plate and its point of engagement with said arm for varying the position of the pointer end of said arm on a bow.

4,061,108

SLIDE SMEARING DEVICE

Marshall S. Levine, Wayne, and Albert A. Faulkner, Conshohocken, both of Pa., assignors to SmithKline Corporation, Philadelphia, Pa.

Filed May 19, 1976, Ser. No. 688,101

Int. Cl.² B05C *11/04*

U.S. Cl. 118—100 **30 Claims**

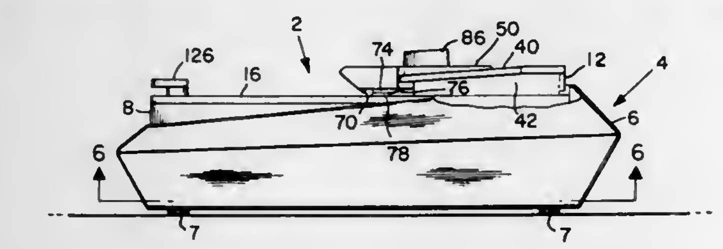

1. A device for smearing on a slide a liquid placed at a predetermined position on the slide comprising:

a housing,

means for supporting a slide on the top of the housing,

a reciprocable carriage mounted on the top of the housing,

a spreader mounted on the carriage and adapted to engage the slide,

said carriage being movable with respect to the slide in one direction to move the spreader to said predetermined position on the slide and into contact with the liquid,

drive means to retract the carriage at a predetermined speed in the opposite direction to cause the spreader to smear the liquid on the slide,

said drive means including a spring and an air dashpot having a cylinder with means to restrict the passage of air through one end and being open at its other end and a piston connected to the carriage adjacent the open end when the carriage is retracted, and

the restricting means being adjustable to provide for the selection of different retracting speeds.

4,061,109

COATING AND SMOOTHING APPARATUS

Roger Anthony Allen, Gt. Missenden, England, assignor to Wiggins Teape Limited, London, England

Filed Mar. 9, 1976, Ser. No. 665,225

Claims priority, application United Kingdom, Mar. 10, 1975, 9788/75

Int. Cl.² B05C *11/02*

U.S. Cl. 118—118 **7 Claims**

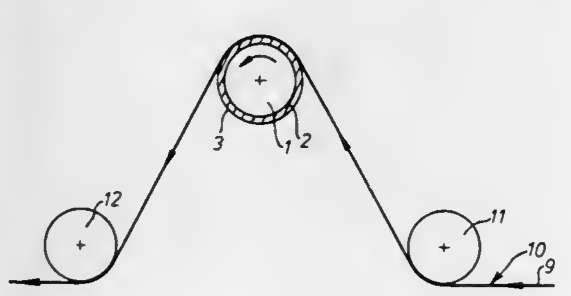

1. Apparatus for coating a web of paper or other sheet material, comprising means for applying a liquid coating composition to a surface of the web, and, beyond said means in the direction of web movement, a smoothing roll having a soft elastomeric covering with a smoothing surface which is pitted, said pitted smoothing surface being substantially impermeable to liquid coating compositions, the smoothing roll being drivable in use to permit its surface to move relative to the coated surface of the web, thereby to smooth the coating previously applied by said means.

4,061,110

APPARATUS AND METHOD FOR THE FARMING OF CLAMS

Wallace C. Steidle, Middle Line Highway, Water Mill, N.Y. 11976

Filed July 26, 1976, Ser. No. 708,392

Int. Cl.² A01K *61/00*

U.S. Cl. 119—4 **3 Claims**

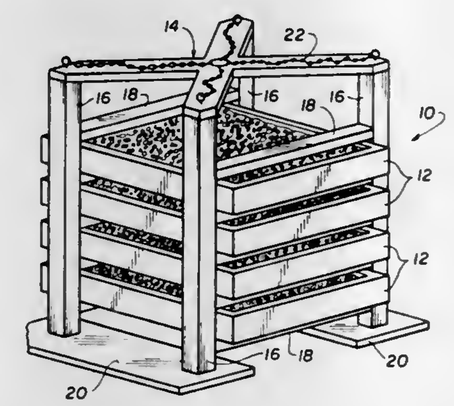

1. Apparatus for the farming of clams in waters having rapidly flowing currents comprising a plurality of trays made of heavily weighted material having a generally rectangular bottom and 4 integrally interconnected side walls formed integrally with the bottom and extending vertically upward therefrom, a supporting frame having means for supporting said trays in a vertically spaced stacked relationship, base means on said supporting frame for standing upon bottom land below water and hoisting means attached with said supporting frame for raising said frame onto and off of said bottom land, each of said trays comprising a layer of sand in sufficient quantity to support clam life into which said clams are embedded, spaced apart from each other for growing, and a layer of gravel covering said layer of sand.

4,061,111

AUTOMATIC CHINCHILLA SANDER AND CLEANER

Charles A. Smith, 2540 Meldrum St., Windsor, Ontario, Canada

Filed June 28, 1976, Ser. No. 700,452

Int. Cl.² A01K *67/00*

U.S. Cl. 119—159 **6 Claims**

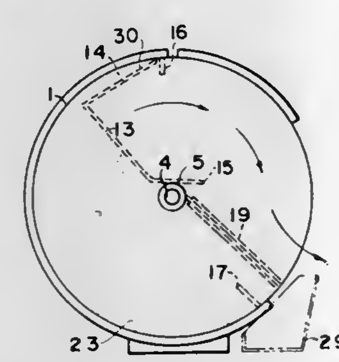

1. A device for sanding chinchillas or similar furbearing animals, comprising in combination a circular container having an open entrance in its curved wall for the entry and discharge of an animal therethrough, and containing a sand mixture in the bottom thereof; a screen, located within said container for screening said sand and discharging said animal, which rotates upon a central shaft, said shaft consisting of an inner solid shaft and an outer hollow shaft; a press fitted pin running through both said shafts for connecting or disconnecting said outer shaft to or from said inner shaft; a speed reducer for rotating said screen; upper and lower stop means within said container for locating said screen in an animal entry position and an animal discharge position; clutch means for connecting said inner shaft to said speed reducer; coupling means for connecting said inner shaft on one device to the inner shaft of another similar device; and a removable partition located between the outer shaft and the bottom of said entrance, within the circular container, and slidably supported and held between a pair of U-shaped tracks which are attached to the side walls of the container, to prevent the animal from by-passing the screen entering or being discharged by said screen.

4,061,112

STEAM GENERATING PLANT

Thomas Gibson, Potters Bar, England, assignor to Foster Wheeler Energy Corporation, Livingston, N.J.

Filed Jan. 26, 1976, Ser. No. 652,602

Claims priority, application United Kingdom, Feb. 7, 1975, 5357/75

Int. Cl.² F22B *1/02, 21/22*

U.S. Cl. 122—7 R **3 Claims**

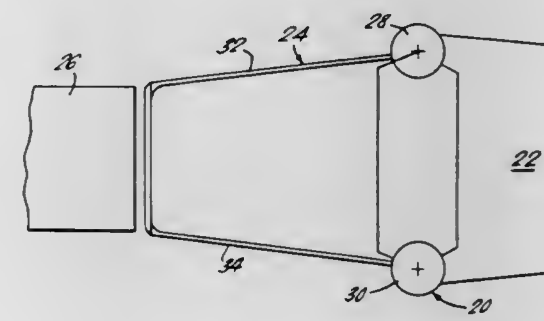

1. In a waste heat steam boiler plant:

a. A waste heat boiler comprising:

i. a steam drum adjacent to the top of said boiler;

ii. a steam and water drum adjacent to the bottom of said boiler;

iii. downcomer means connecting said steam drum to said steam and water drum; and

iv. riser means connecting said steam and water drum to said steam drum;

b. a waste gas duct; and

c. a tapered transition chamber adapted to be connected between said duct and said boiler, said transition chamber having a roof sloping upwardly from said duct, a floor sloping downwardly from said duct, and angularly disposed sidewalls whereby the cross-sectional area of said transition chamber increases between said duct and said boiler, said transition chamber defined by air-tight side walls, air-tight floor and air-tight roof, said walls, floor and roof including water-cooled tubes, means rigidly uniting said tubes, said tubes being connected at their upper ends to said steam drum and at their lower ends to said steam and water drum so that said tubes extend upwardly over their entire length from said steam and water drum to said steam drum.

4,061,113

PROCESS FOR REDUCING THE POLLUTION DUE TO AN INTERNAL COMBUSTION ENGINE, AND AN ENGINE INCLUDING THE APPLICATION OF SAID PROCESS

Roland Beyler, 61, Avenue du Marechal Joffre, 94360 Bry-sur-Marne, France

Continuation of Ser. No. 437,739, Jan. 29, 1974, abandoned. This application Nov. 10, 1975, Ser. No. 630,175

Int. Cl.² F02B *41/00;* **F02P** *1/00;* **F02B** *33/00*

U.S. Cl. 123—26 **22 Claims**

1. A process for reducing pollution due to an internal combustion engine piston and cylinder, which cylinder has two spark-producing electrodes in a combustion chamber of the cylinder, comprising starting a supply of high-tension electric current to said electrodes to initiate a high-tension electrical

fuel-igniting discharge in the combustion chamber at the end of an air/fuel mixture compression stroke to cause explosion and primary combustion of said mixture, prolonging said supply of current to said electrodes in a continuous uninterrupted manner during at least a major part of the expansion stroke while at

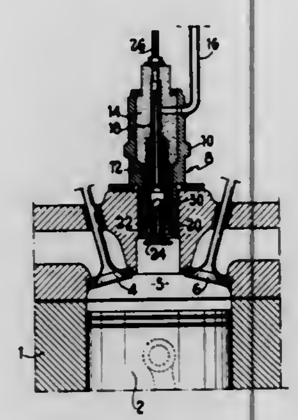

the same time supplying an annular-section stream of whirling additional air in the vicinity of and encompassing said initial electrical discharge so as to form a plasma which reaches the residual mixture contained in the cylinder and produces a secondary combustion which tends to complete the combustion in said cylinder.

4,061,114
LEAN CHARGE IGNITION SYSTEM
Nathan H. Christopher, 16833 Melbourne Drive, Laurel, Md. 20810
Filed Aug. 20, 1976, Ser. No. 716,095
Int. Cl.² F02B *3/06, 3/08, 3/10*
U.S. Cl. 123—32 SJ **9 Claims**

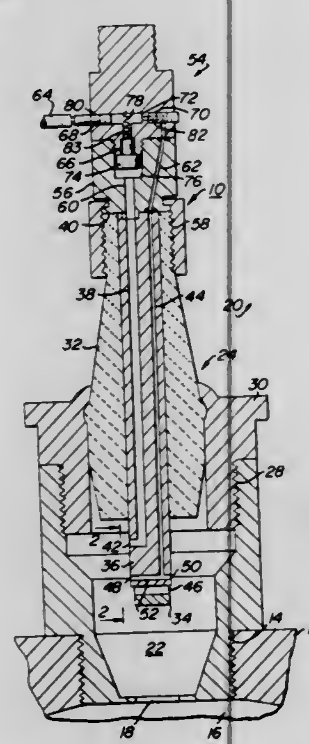

1. An improved fuel ignition system for an internal combustion engine having at least one engine cylinder, comprising:
a. fuel igniter means having a pair of electrodes, one of said electrodes having (1) a first passage, and (2) a second passage for inlet of fuel into a neighborhood of a spark gap formed by said electrodes; and,
b. fuel injection means having a pair of fuel injection means passages aligned with said first and second passages of said fuel igniter means, said fuel injection means being coupled to a fuel supply for displacing said fuel through said fuel igniter means second passage.

4,061,115
VALVE TRAIN FOR INTERNAL COMBUSTION ENGINE
Wilfred F. Predhome, Jr., 487 Ursula St., Aurora, Colo. 80011
Filed June 1, 1976, Ser. No. 691,429
Int. Cl.² F01L *1/34*
U.S. Cl. 123—90.16 **9 Claims**

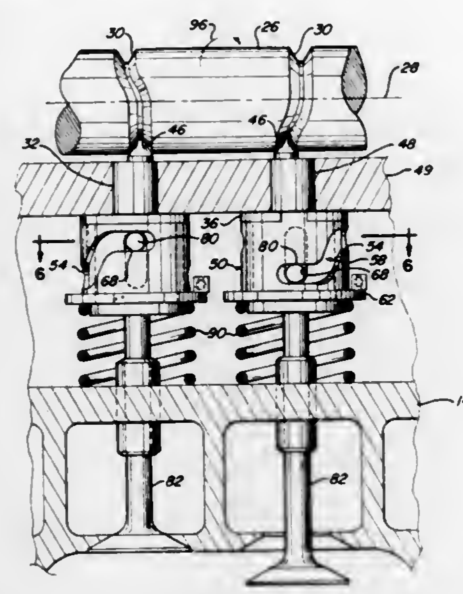

1. A valve train for a poppet valve of a reciprocating internal combustion engine comprising:
an internal combustion engine;
a cam shaft having an axis of rotation and being mounted on said engine for rotation about its axis at angular velocities which are a function of engine rpm;
means forming a cam surface on said shaft;
a cam follower having an axis of rotation;
means for mounting said cam follower on said engine in engagement with the cam surface of said cam shaft to convert rotation of said cam shaft into reciprocating rotation of said cam follower about its axis of rotation;
a reciprocating member having projecting means;
cam means operatively connected to said cam follower;
movable control means concentrically mounted with respect to said cam means;
said cam means, control means and projecting means interacting to convert reciprocal rotation of said cam follower to reciprocating linear motion of the reciprocating member substantially along the axis of rotation of said cam follower;
said cam means and control means varying the amplification and timing of said reciprocating member with respect to the angular position of the cam shaft as a function of the position of said control means with respect to said engine;
servo means operatively connected to the control means to vary the control means position to vary the amplitude and timing of the reciprocating member as a function of engine rpm and load;
a poppet valve; and
means for operatively connecting said valve to said reciprocating member.

4,061,116
KNOCK LEVEL CONTROL APPARATUS FOR AN INTERNAL COMBUSTION ENGINE
Yoshinori Saida, and Kazumasa Katoh, both of Yokohama, Japan, assignors to Nissan Motor Co., Ltd., Yokohama, Japan
Filed Oct. 16, 1975, Ser. No. 623,020
Claims priority, application Japan, Oct. 17, 1974, 49-119629; May 20, 1975, 50-59207; May 20, 1975, 50-59208; June 4, 1975, 50-74700[U]
Int. Cl.² F02D *5/04*
U.S. Cl. 123—117 D **11 Claims**

1. A knock level control apparatus for an internal combustion engine, which comprises:

converting means for converting sounds emitted from said internal combustion engine into electrical signals;
knock voltage generating means for generating a knock voltage representing a maximum voltage of frequency components of said electrical signal within a predetermined frequency band width, said knock voltage generating means including, a plurality of band pass filters each for exclusively passing therethrough frequency components of said electrical signal within a predetermined frequency band, the respective frequency bands of the filters being different from one another, a maximum value detector for passing therethrough a maximum one of

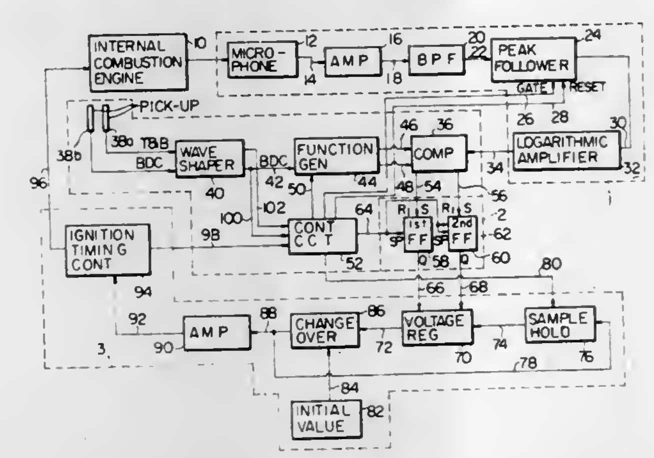

frequency components passed through said band pass filters, a peak follower for producing a peak voltage equal to a maximum voltage of said maximum one of the frequency components, and a logarithmic amplifier for logarithmically amplifying said peak voltage;
knock level discriminating means for producing a retard signal when said knock voltage exceeds a higher predetermined level and an advance signal when said knock voltage lowers below a predetermined level; and
ignition timing control means for controlling the ignition timing of said internal combustion engine in accordance with said advance and retard signals.

4,061,117
METHOD OF CONTROLLING AIR-FUEL MIXTURE IN INTERNAL COMBUSTION ENGINE AND A SYSTEM THEREFOR
Kenji Ikeura, Yokosuka, Japan, assignor to Nissan Motor Co., Ltd., Yokohama, Japan
Filed Mar. 30, 1976, Ser. No. 672,020
Claims priority, application Japan, Mar. 31, 1975, 50-38926; May 26, 1975, 50-62647
Int. Cl.² F02D *35/00, 75/10*
U.S. Cl. 123—119 EC **11 Claims**

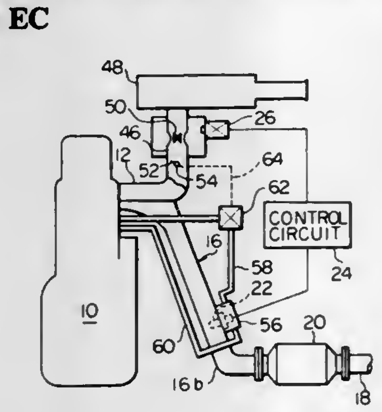

1. In an automotive internal combustion engine including a mixture supply system for producing from air and fuel delivered thereto an air-fuel mixture to be fed to the cylinders of the engine and an exhaust system having incorporated therein a catalytic converter which is reactive to at least one predetermined type of air contaminative compound in the exhaust gases emitted from the engine cylinders and which exhibits its maximum conversion efficiency to the exhaust gases resulting from an air-fuel mixture having a predetermined air-to-fuel ratio, a method of controlling the air-to-fuel ratio of the mixture to be produced in the mixture supply system, comprising detecting the concentration of at least one predetermined type of chemical component of the exhaust gases from the engine cylinders by means of an exhaust sensor located in the exhaust system downstream of the branch tube portions of the exhaust manifold of the exhaust system and upstream of the catalytic converter, said exhaust sensor having an external portion projecting outwardly from the exhaust system, producing a signal representative of the detected concentration of said chemical component, controlling the delivery rate of at least one of air and fuel to the mixture supply system in accordance with said signal for regulating the air-to-fuel ratio of the mixture in the mixture supply system toward said predetermined air-to-fuel ratio, detecting high-load operating conditions of the engine, and inducing a forced flow of cooling fluid through said external portion of the exhaust sensor under high-load operating conditions of the engine.

4,061,118
CARBURETOR SYSTEM FOR MULTICYLINDER ENGINE
Yuhiko Kiyota, Nagaokakyo, Japan, assignor to Mitsubishi Jidosha Kogyo Kabushiki Kaisha, Japan
Filed June 17, 1976, Ser. No. 697,125
Claims priority, application Japan, June 24, 1975, 50-78131
Int. Cl.² F02M *13/06;* **F02B** *33/00*
U.S. Cl. 123—119 LR **7 Claims**

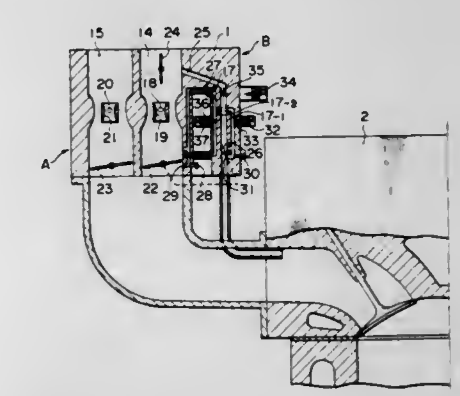

1. A carburetor system for use in a multicylinder engine which comprises a carburetor having a main fuel-air mixture supply device to supply a mixture leaner than stoichiometric to at least one first cylinder and at least one second cylinder, a rich mixture supply means, integrated into the carburetor, having a rich mixture forming passage to make a mixture richer than stoichiometric, a first passage means to connect the main mixture supply means with the first and second cylinders, a second passage means to connect the rich mixture forming passage with the second cylinder, a fuel addition passage having a first fuel passage to supply fuel to the rich mixture forming passage and a second fuel passage to the main mixture supply means, means to actuate a first and second valve respectively provided in said first and second fuel passage, means to actuate a third valve in said rich mixture forming passage, and operation control means for said first, second and third valves.

4,061,119
EXHAUST GAS RECIRCULATION APPARATUS FOR AN INTERNAL COMBUSTION ENGINE
Tomon Takeshita, Nagoya, Japan, assignor to Toyota Jidosha Kogyo Kabushiki Kaisha, Toyota, Japan
Filed July 21, 1976, Ser. No. 707,339
Claims priority, application Japan, Apr. 27, 1976, 51-47281
Int. Cl.² F02M *25/06*
U.S. Cl. 123—119 A **5 Claims**

1. An exhaust gas recirculation apparatus comprising conduit means connecting the exhaust system of an engine to the intake system thereof at a first location downstream of the throttle valve of the engine and a second location upstream of said throttle valve, normally closed valve means in said con-

duit means to control flow from said exhaust system to said first and second locations, at least one of said valve means having a closed chamber with a diaphragm therein normally resiliently biasing a valve part to closed position and means to connect said closed chamber to a port located slightly above

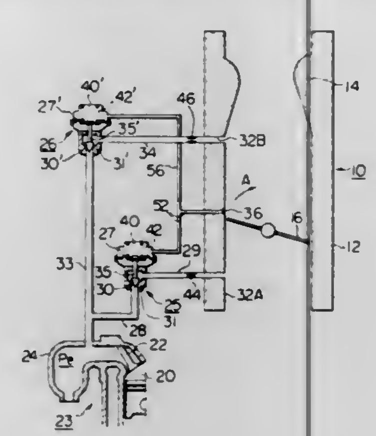

the fully closed position of said throttle valve whereby vacuum from said port may cause said diaphragm to move said valve part to opening position against said resilient bias and means to cause an effect of said vacuum to open the other of said valve means.

4,061,120
IGNITION DEVICE FOR ENGINES
James C. Hughes, 172 Poinsetta Circle, Terrell, Tex. 75160
Division of Ser. No. 362,108, May 21, 1973, Pat. No. 3,954,093. This application Apr. 15, 1976, Ser. No. 677,142
Int. Cl.² F02P *23/00*
U.S. Cl. 123—143 A **5 Claims**

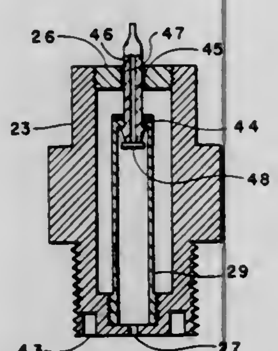

1. An ignition device for use in an internal combustion engine of the kind in which successive charges of fuel air mixture are introduced into a combustion chamber, compressed, ignited, expanded, and exhausted, and in which said combustion chamber has a cooled wall, said device comprising:
an elongate ignition cell mounted in said cooled wall, said cell having an orifice providing communication between the interior of said cell and the interior of said combustion chamber;
mounting means for securing said cell in said cooled wall, including means blocking flow of heat between said cell and said cooled wall;
housing means surrounding said cell for controlling flow of heat between said cell and the ambient;
an electrically insulating sleeve passing through and sealed to the end of said cell remote from said combustion chamber, said sleeve also passing through said housing means;
an electrical conductor passing through said insulating sleeve from a point external of said housing means to a point within said cell, said conductor being sealed to said sleeve,
and a sparking electrode conductively connected to the inner end of said conductor within said cell, said electrode being at all points spaced from the walls of said cell.

4,061,121
MAGNETO-ALTERNATOR WITH MAGNETO ENERGY LIMITING
John Norman MacLeod, Ann Arbor, Mich., assignor to Tecumseh Products Company, Tecumseh, Mich.
Filed Apr. 30, 1975, Ser. No. 573,101
Int. Cl.² F02P *1/02;* **H02K** *21/22*
U.S. Cl. 123—149 R **29 Claims**

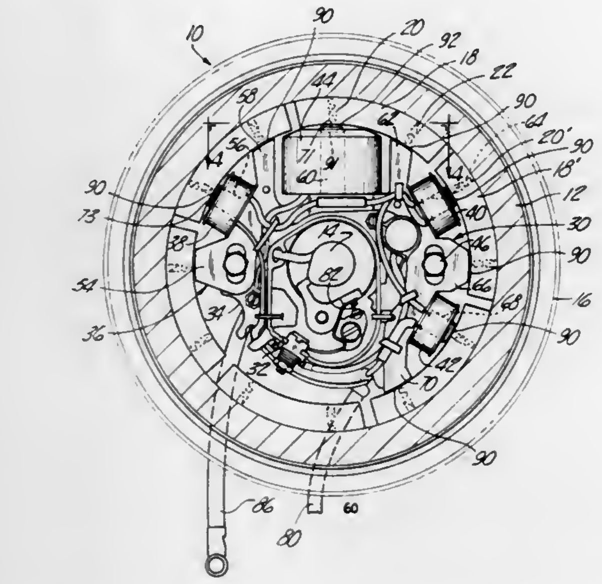

1. An electrical generating system for use in the ignition circuit of an internal combustion engine comprising a rotor adapted to be driven by said engine, magnetic means on said rotor to establish a magnetic field, a stator having a plurality of magnetic core legs thereon, said rotor and said stator being operatively arranged and disposed relative to each other so that said magnetic field is coupled to respective first and second core legs through respective first and second air gaps during relative rotation of said rotor and said stator, and an ignition coil on one of said first and second legs and responsive to said field to generate a first electrical output for igniting a spark at a spark plug and wherein said first air gap between said first leg and said magnetic means is substantially greater than said second air gap between said second core leg and said magnetic means so as to limit said output at said first coil at normal operating speeds of said engine without substantially limiting said output at starting speeds of said engine.

4,061,122
SPARK PLUG
Robert G. Edgar, and Miriam E. Edgar, both of 4871 Geneva Ave., Concord, Calif. 94521
Filed Jan. 8, 1976, Ser. No. 647,352
Int. Cl.² F02P *13/00, 23/00;* **H01T** *13/00, 13/20*
U.S. Cl. 123—169 R **1 Claim**

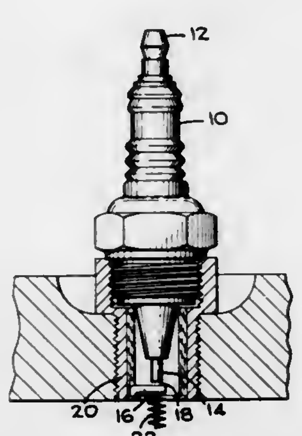

1. A spark plug for an internal combustion engine which comprises
a body member,
a pair of electrodes supported by said body member to pro-

vide a spark gap in the combustion chamber of the engine, and
a reaction member supported adjacent said spark gap so as to lie within the flame ignition and combustion zone of the engine,
said reaction member including catalytic agents including a mixture of boron and manganese compounds.

4,061,123
ENGINE DE-COMPRESSION MECHANISM
Robert W. Janes, 215 E. Page St., Orlando, Fla. 32806
Filed Oct. 15, 1976, Ser. No. 732,738
Int. Cl.² F02D *13/06*
U.S. Cl. 123—198 F **3 Claims**

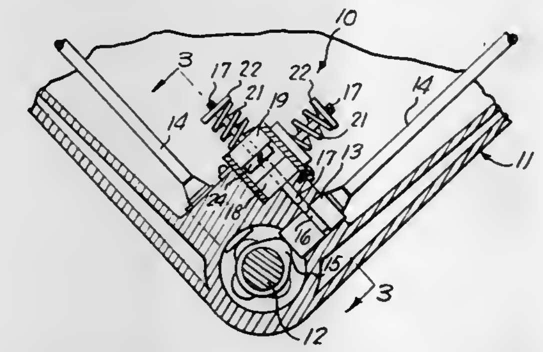

1. A valve deactivator for de-compressing selected cylinders of an internal combustion engine of the type including a cam shaft and valve lifters comprising an annular detent groove formed in the valve lifters, a reciprocatable detent shaft engageable in the groove to lock the valve lifter in valve lifted position thereby removing said lifters from said cam shaft, means for moving said detent shaft from valve lifter unlocking position to valve lifter locking position and back again, and spring means for further disengaging said detent shaft from said groove in said valve lifter upon inaction of the means for moving said detent shaft.

4,061,124
COMPOUND BOW WITH CABLE TENSIONING ASSEMBLY
Norman Arlo Groner, Kalkaska, Mich., assignor to Victor United, Inc., Chicago, Ill.
Filed Nov. 10, 1975, Ser. No. 619,370
Int. Cl.² F41B *5/00*
U.S. Cl. 124—23 R **21 Claims**

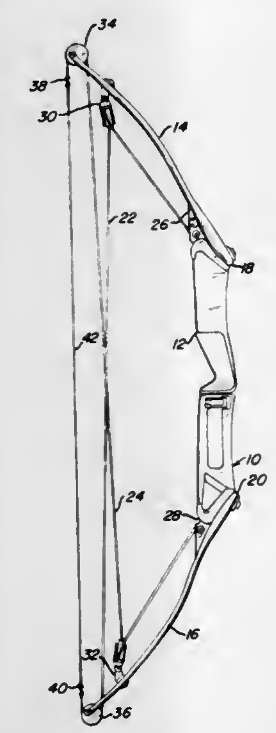

1. A compound archery bow comprising:
an elongated handle member having a longitudinal axis and opposite spaced end portions;
a pair of limb members for mounting on said spaced end portions having inner end portions and outer end portions;
a limb end portion receiving member affixed to said handle end portions;
curved rib means on each of said receiving member extending ransversely of said longitudinal axis for mounting one of said limb members;
first threaded fastening means on each of said receiving member spaced longitudinally from said curved rib means for attaching one of said limb members; said receiving member including flanges for aligning said handle member and said limb members;
curved abutment groove means on each of said limb inner end portions for abuttingly pivotally supporting one of said limb members on said curved rib means in load bearing relationship therewith said groove means being removably mounted on said limb members;
a second threaded fastening means providing the only releasably securing connection between the handle member and the limb member, said fastening means being adapted to be associated with each of said inner end portions and said first threaded fastening means for adjustably fixedly mounting said limb members on said spaced end portions;
load bearing means mounted on each of said inner end portions of said limb members for abutting load transferring engagement with said second threaded fastening means in each of a number of infinitely variably positions between a first position of minimum inclination of said inner end portions relative to said spaced end portions providing maximum draw weight and a second position of maximum inclination of said inner end portions relative to said spaced end portions providing minimum draw weight;
said load bearing means including elongated slot means in said inner end portions of said limb members extending longitudinally of said limb members for receiving said second threaded fastening means therewithin;
said receiving member overlying said groove means and said load bearing means;
elongated abutment surface means on said inner end portions of said limb members adjacent said slot means for abutting engagement with said second threaded fastening means;
cable means attached to said bow for propelling an arrow from said bow;
cable attachment means on each of said inner end portions for attaching said cable means to said limb members;
wheel means on the outer end portions of said limb members for rotatably supporting said cable means;
draw string means attached to said cable means for propelling an arrow from the bow and being connected to said cable means and forming one uninterrupted path for transmitting a draw force.

4,061,125
BOWSTRING POSITIONING DEVICE
George H. Trotter, 7107 Janey St., Shreveport, La. 71108
Filed Nov. 28, 1975, Ser. No. 635,865
Int. Cl.² F41B *5/00*
U.S. Cl. 124—24 R **7 Claims**

1. A bowstring positioning device for a bow having a bowstring comprising a shaft having one end fixedly connected to said bow and extending in the direction of curvature and bend of said bow, and the opposite end positioned in alignment with the path of said bowstring and terminating at a point intermedi-

ate the normal, straight line position of said bowstring and the position of said bowstring when said bow is drawn, to receive

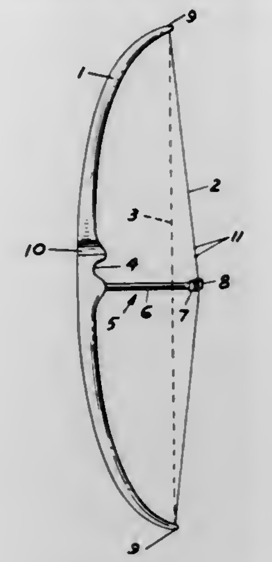

and stop said bowstring when said bow is drawn and said bowstring is released.

4,061,126
CERAMIC TILE CUTTING APPARATUS
Ronald F. Schlangen, R.R. No. 1, Richmond, Minn. 56368
Filed Nov. 2, 1976, Ser. No. 738,250
Int. Cl.² B28D *1/08*
U.S. Cl. 125—21 **6 Claims**

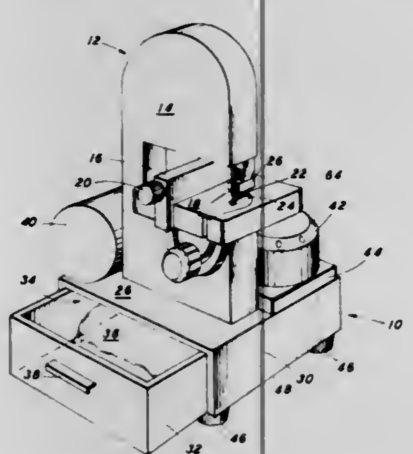

1. In a band saw cutting apparatus comprising a C-frame, a pair of wheels journalled to the C-frame, a cutting blade carried by the pair of wheels, the output shaft of a motor coupled to one of the wheels, the improvement comprising;

a. a hollow container providing vertical support for the band saw cutting apparatus,
b. a blower motor fixedly secured to the container having a blade assembly secured to a shaft thereof, a housing enclosing the blower motor and the blade, said container having a first opening therein, the first opening communicating to the housing, a filter being disposed removably secured covering the first opening,
c. a drawer, the drawer being slideably affixed to the container, the drawer having an open mouth portion disposed above the marginal edges of the side wall thereof, the container having a second opening in the walls thereof, the second opening being disposed adjacent a lowermost one of said pair of wheels and above said drawer, the first opening of said container being located adjacent the second opening and covering a portion of said drawer, and
d. a resilient material fixedly secured to a portion of the exterior surface of the container.

4,061,127
MOBILE HOME FIREPLACE WITH EXTERNAL AIR SUPPLY
Eugene W. Fisher, 2040 W. Clay St., Dallas, Oreg. 97338
Filed May 1, 1975, Ser. No. 573,540
Int. Cl.² F24B *1/18*
U.S. Cl. 126—120 **3 Claims**

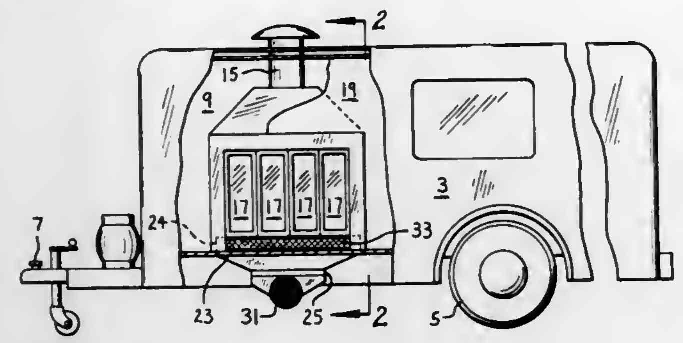

1. An improved fireplace comprising:
a combustion chamber;
a chimney connected to the chamber;
a solid door for substantially sealing the chamber off from the air supply within the interior of a dwelling containing the fireplace;
a combustion chamber air supply duct having an upper end and a lower end, the upper end defining an air inlet hole and terminating within the combustion chamber by protrusion through the chamber floor to a point above said floor but below and behind the door so that burning materials and hot ashes on the floor are substantially prevented from entering the duct, the lower end of the duct having an elongate section protruding through the floor of the dwelling to a position below the floor outside the dwelling; the duct defining a substantially unobstructed air path from a source of exterior air to the interior of the chamber behind the door and above the chamber floor when the chamber is sealed.

4,061,128
HAND-WARMING AND LIQUID-HEATING DEVICE
Curtis B. Storey, Box 290, Rte. 1, Limerick, Maine 04048
Filed June 21, 1976, Ser. No. 697,855
Int. Cl.² A61F *7/06*
U.S. Cl. 126—210 **7 Claims**

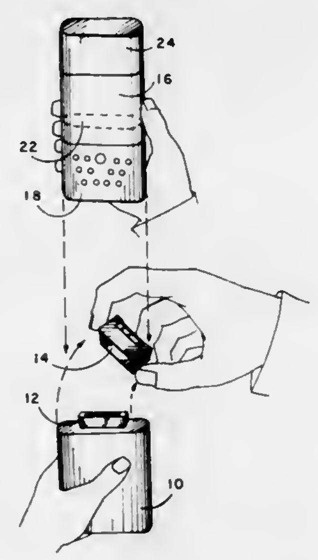

1. A hand-warming and liquid-heating unit combination comprising:
a catalytic hand-warming unit;
a liquid-containing chamber affixed to said catalytic hand-warming unit;
an insertion member, having a plurality of apertures for air circulation to a heating element of said hand-warming unit being slideably insertable between and engageable with said hand-warming unit and said liquid-containing chamber;
a baffle member to enclose and divide said liquid-containing chamber from said hand-warming unit;
a cover cap slideably insertable over the opening of said liquid-containing chamber in a fluid-tight relationship;
a heating element associated with said cover cap to protrude within said liquid-containing chamber; and
an energizing source associated with said heating element compartmentally segregated from said liquid-containing chamber.

4,061,129
SOLAR FURNACE HEATING SYSTEM
Melvin A. Wilson, Rte. 1, Box 514, Stevensville, Md. 21666
Filed Sept. 13, 1976, Ser. No. 722,698
Int. Cl.² F24J *3/02*
U.S. Cl. 126—270 **14 Claims**

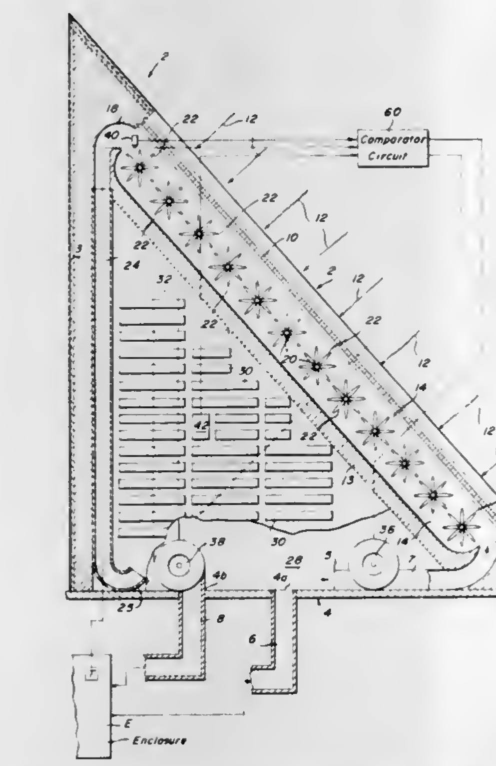

1. In a forced fluid solar furnace heating system including a housing having a bottom wall and at least one inclined transparent vertical wall adapted to face the sun, heat collector means arranged within said housing beneath and adjacent said vertical wall for receiving the solar energy transmitted through said transparent vertical housing wall, heat storage means contained in said housing adjacent said bottom wall, and means for directing a flow of heat transfer fluid successively across said heat collector means and through said heat storage means, said housing also containing an inlet opening for supplying a medium to be heated to the heat storage means, and an outlet opening for withdrawing heated air from the heat storage means;
the improvement wherein said heat collector means comprises
a. at least one rotatable heat collector element including
1. a generally cylindrical hub portion; and
2. a plurality of generally planar vane portions extending radially outwardly from said hub portion; and
b. means connecting heat collector element with said housing for rotation about the longitudinal axis of said hub portion, the axis of rotation of said heat collector element being parallel with and spaced from said transparent vertical wall.

4,061,130
SOLAR ENERGY DEVICE
Eduardo E. Gonzalez, 2284 NE. First St., Boca Raton, Fla. 33432
Filed Apr. 28, 1975, Ser. No. 572,122
Int. Cl.² F24J *3/02*
U.S. Cl. 126—271 **11 Claims**

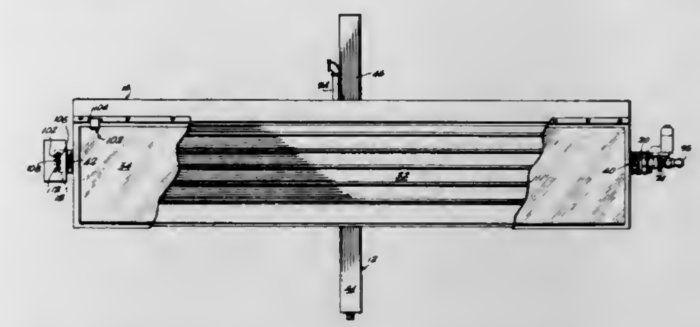

1. In combination, sun tracking means and a solar energy collector, said solar energy collector including sun energy collecting means to continuously conduct flowable material and including an inlet and an outlet for the material, and a main collector face arranged in sun energy transferring relation with the collecting means, said tracking means including means to selectively orient the face to receive sun rays and including drive means to orient the collector face, and means to support the combination;
said means to orient including sun-seeking sensing means to sense the azimuth angle and elevation angle of the sun and means operatively interconnecting said sensing means and drive means to orient,
connector means including conduit to continuously travel flowable material through said inlet and outlet simultaneously with the operation of said tracking means.

4,061,131
HEAT TRANSFER SYSTEM PARTICULARLY APPLICABLE TO SOLAR HEATING INSTALLATIONS
Hoy R. Bohanon, Muskogee, Okla., assignor to Acme Engineering and Manufacturing Corporation, Muskogee, Okla.
Filed Nov. 24, 1975, Ser. No. 634,898
Int. Cl.² F24J *3/02*
U.S. Cl. 126—271 **15 Claims**

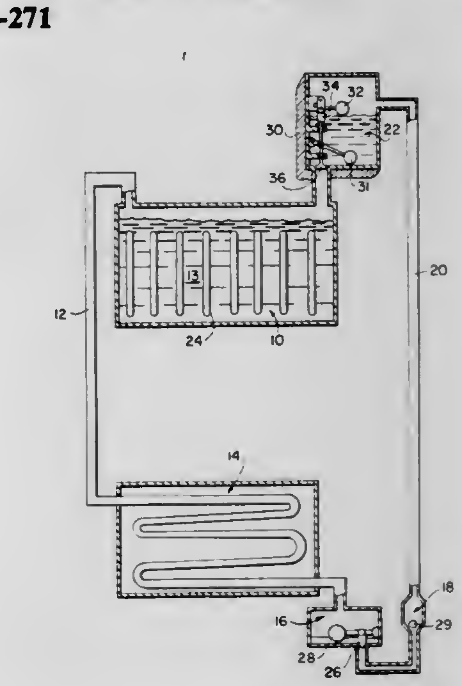

1. A system for transferring heat from a source at high temperature to a sink at relatively lower temperature wherein the sink is located at an elevation below the source, comprising an evaporator in heat exchange relationship with said source, a condenser in heat exchange relationship with said sink, vapor conduit means connecting the top portion of said evaporator directly to said condenser, a check valve, conduit means connecting said check valve to said condenser, a liquid transfer

tank positioned above said evaporator and provided with means for intermittently transferring the liquid accumulated in said transfer tank to said evaporator in response to the volume of the liquid in said transfer tank, liquid conduit means connecting said check valve to said transfer tank, and a volatile fluid within the system.

4,061,132
CONTROL VALVE MEANS PARTICULARLY ADAPTED FOR SWIMMING POOL HEATER INSTALLATIONS EMBODYING A SOLAR HEATER
Larry Ashton, 1791 Ide Court, Thousand Oaks, Calif. 91360, and Leo Block, 4188 Lake Harbor Lane, Westlake Village, Calif. 91361
Filed June 25, 1976, Ser. No. 699,622
Int. Cl.² F24J *3/02*
U.S. Cl. 126—271 **4 Claims**

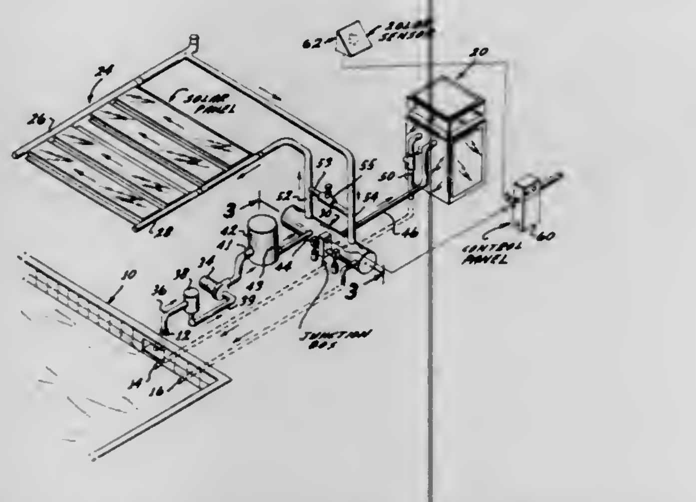

1. A valve structure adapted for controlling flows of water through a first path and a second path, the structure including a casing having an inlet, a first outlet for said first path, and a second outlet for said second path, valve means and seat means in said housing positionable whereby to direct water alternatively from the inlet to the first outlet only or from the inlet to the second outlet only and actuator means, a heat exchanger in the first path of flow and a heat exchanger in the second path of flow, one of said heat exchangers being a solar absorber, the said heat exchangers being connected to a swimming pool, said housing having a second inlet adapted to receive return water from said second path, the said valve and seat means including valve means and seat means relatively positionable whereby water from said second inlet is communicated to said first outlet whereby water flows through said first path and second path in series when water is directed to said second outlet.

4,061,133
COMBINATIONAL FIREPLACE UNIT
Samuel J. Swain, 824 Dixie St., Carrollton, Ga. 30117
Filed Nov. 26, 1975, Ser. No. 635,422
Int. Cl.² F24H *1/44*
U.S. Cl. 126—350 R **6 Claims**

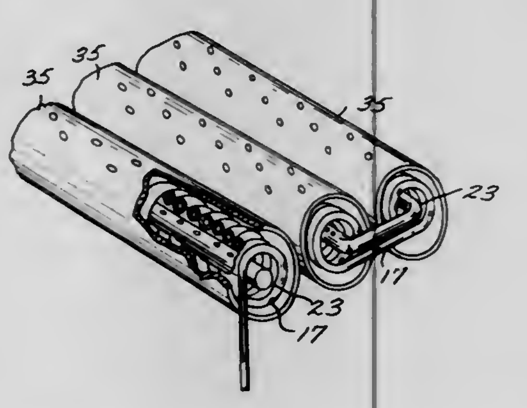

1. A combinational fireplace arrangement comprising at least one log-shaped member having a hollowed center portion and having means for transferring air from below the log-shaped member to said hollowed center portion thereof and having aperture means extending from said hollowed center portion to the outside of said log-shaped member proximate the top thereof, means for supporting said at least one log, a spiral shaped tube extending within the hollowed center portion and substantially throughout the length of said at least one log, and a fuel burning means extending along the longitudinal axis defined by said spiral tubing, said fuel burning means heating a fluid passing through said spiral tubing while at the same time generating the flame which passes through said apertures upwardly away from said log-shaped member to give the appearance of a burning log.

4,061,134
ARTERIAL GRAFT DEVICE
Peter B. Samuels, 14708 Sutton St., Sherman Oaks, Calif. 91403, and Ernest C. Wood, 2461 Ivanhoe Drive, Los Angeles, Calif. 9000
Filed Oct. 28, 1975, Ser. No. 626,070
Int. Cl.² A61F *1/24;* **A61B** *19/02*
U.S. Cl. 128—1 R **22 Claims**

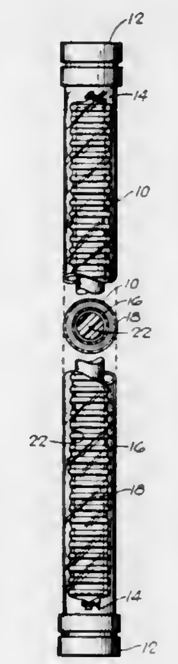

1. A device for use in the preparation of a graft for blood vessels comprising a sealed chamber within an elongate housing formed of impervious walls, an elongate tubular porous base member disposed within said sealed chamber the walls of which are formed with axially spaced corrugations to enable the base member to be stretchable in the axial direction and bendable in all directions while militating against collapse to block the passage extending continuously through the base member, means for introducing blood into the sealed chamber for clotting onto the walls of the base member while confined within the sealed chamber, and means for gaining access to the interior of the chamber for removal of the base member after the blood has been clotted onto the walls thereof.

4,061,135
BINOCULAR ENDOSCOPE
Jerrold Widran, Glencoe, and Stuart A. Solin, Chicago, both of Ill., assignors to Jerrold Widran, Chicago, Ill.
Filed Sept. 27, 1976, Ser. No. 727,291
Int. Cl.² A61B *1/06*
U.S. Cl. 128—6 **25 Claims**

1. A binocular endoscope for obtaining three dimensional visual perception of an image of an object to be viewed,
said endoscope comprising:
a pair of elongated, coextensive, juxtaposed optical systems for directing and guiding object-reflected light simultaneously through two paralleling substantially equivalent optical viewing paths delineated by an optic shaft extending between the object viewed and a binocular viewing station,
said optical systems including
long path length lens means including means for focusing the image for viewing at the viewing station,
light path directing means operative to establish a parallax angle between the two viewing paths thereby to provide depth perception of the image of the object viewed,
ocular means for receiving and perceiving an image optically transmitted from the viewed object to the viewing station,

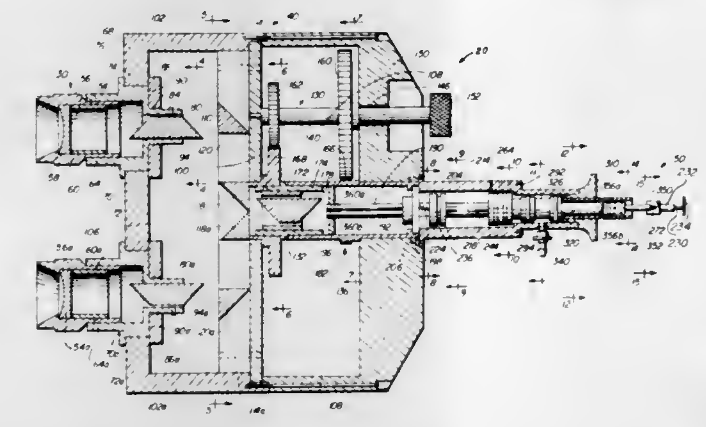

optic shaft means and means for rotatably shifting said optic shaft means relative to said ocular means of the endoscope to facilitate and effectuate continuously variable full-field viewing of an object to be examined, and
shift compensating optic means for maintaining an image of the object viewed in a disposition which is fixed as to angular spatial orientation relative to the viewing station irrespective of manipulative rotation of the optic shaft of the endoscope for selected field viewing.

4,061,136
PORTABLE WASHER AND MASSAGER APPARATUS FOR BATHTUBS
Giuseppe Vaniglia, 5205 W. 87th St., Oak Lawn, Ill. 60459
Filed Sept. 9, 1976, Ser. No. 721,959
Int. Cl.² A61H *29/00*
U.S. Cl. 128—24.1 **10 Claims**

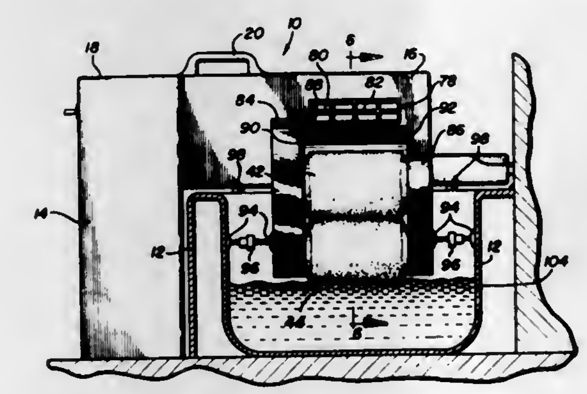

1. Portable body washer and massager apparatus for use with a bathtub, said apparatus comprising:
an L-shaped enclosure defining an enclosed chamber therewith, said enclosure including;
a first enclosure portion extendable horizontally across the top of said bathtub at one end thereof,
a second enclosure portion depending downwardly from said first portion and extendable vertically adjacent a side wall of said bathtub, and
a top enclosure portion interconnecting said first and second portion, said top portion including a handle mounted thereon for readily removing said apparatus from said tub;
an elongated frame mounted coextensively with the bottom of said first enclosure portion, said frame including a pair of spacially separated extensions depending outwardly and downwardly from said elongated frame so as to project within said tub upon emplacement of said apparatus thereon;
a pair of roller brushes rotatably mounted between said pair of spacially separated extensions in substantially vertical alignment with respect to each other;
driven pulley means mounted to said elongated frame at one end thereof adjacent said second enclosure portion, and a first endless belt drivingly connecting said driven pulley means to said pair of roller brushes;
a motor mounted within said enclosed chamber at the bottom of said second enclosure portion substantially isolated from water splashes, said motor adapted for selective connection to an electrical power source;
a driver pulley rotatably mounted to said motor; and
a second endless belt interconnecting said driver pulley and said driven pulley means for rotating said roller brushes during operation of said motor.

4,061,137
KINESITHERAPEUTIC BED STRUCTURE
Clayton Sandt, P.O. Box 243, Mt. Pocono, Pa. 18344
Filed Aug. 24, 1976, Ser. No. 717,216
Int. Cl.² A61H *1/00*
U.S. Cl. 128—33 **6 Claims**

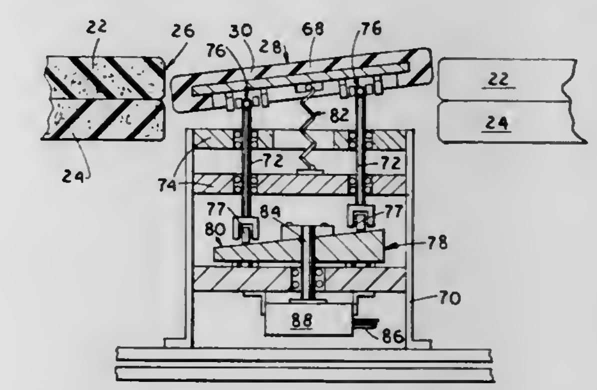

1. A kinesitherapeutic bed structure comprising in combination:
a bed frame;
a coil spring assembly carried by said frame and adapted to support a person thereon, said coil spring assembly having an opening therein dimensioned to accommodate the upper vibratory element of a motion generating mechanism therewithin;
and a motion generating mechanism carried by said frame and including top and bottom plate elements reciprocable respectively in horizontal vertically spaced planes in mutually perpendicular directions, an upper vibratory element carried by said top plate element for reciprocatory movement therewith, and means for independently imparting horizontal reciprocatory movement to each of said top and bottom plate elements and vertical movement to said upper vibratory element.

4,061,138
TOE PROTECTOR AND FOOT SUPPORT FOR AN ORTHOPEDIC CAST
Jacob Bernstein, 4840 Morse, Lincolnwood, Ill. 60646
Filed Aug. 12, 1976, Ser. No. 713,862
Int. Cl.² A61F *13/00*
U.S. Cl. 128—82 **7 Claims**

1. A one-piece toe protector and foot support apparatus for incorporation in a plaster cast comprising an elongated flat tongue having a forward portion and a rear end section, a leading edge on said forward portion having the asymmetric

shape of the outline of a human foot; a rim affixed to said leading edge and perpendicularly extending above and below

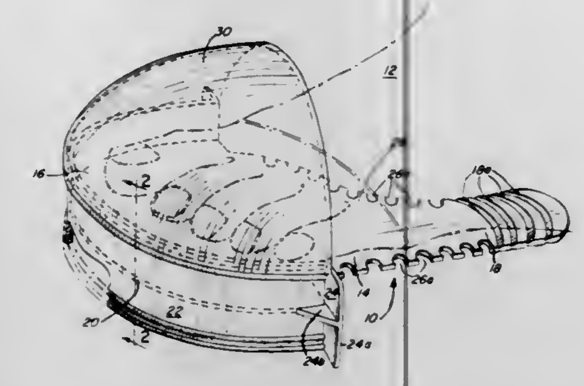

said edge forming toe protecting enclosures for either the right or left foot depending upon which said enclosure is used.

4,061,139
METHOD AND MEANS FOR PROVIDING PROTECTIVE CLOSURES FOR HIGH VELOCITY APPLICATIONS
J. H. Kauffmann, Park Ridge, Ill., assignor to F & B Mfg. Co., Chicago, Ill.
Filed Apr. 26, 1976, Ser. No. 680,293
Int. Cl.^{2} B23K *21/02, 31/00*
U.S. Cl. 228—107 9 Claims

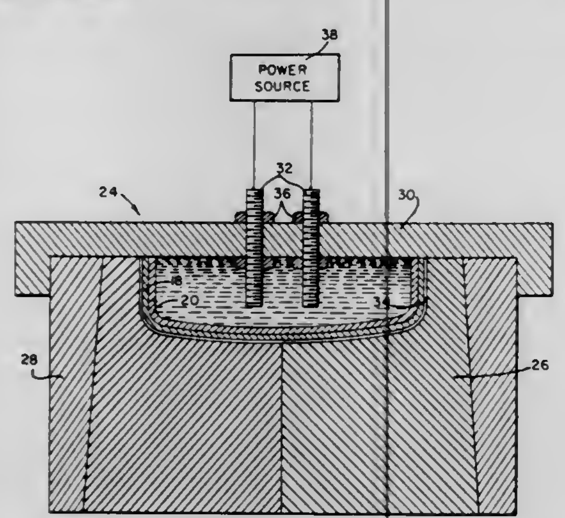

1. A fabricating process for forming and bonding a laminated protective closure for an open ended hollow structure by permanently bonding together and setting dissimilar materials, comprising the steps of:

a. Forming a first material undersized to the outside wall of said hollow structure and in the general configuration of the protective closure to be formed;
b. Forming a second material, comprised of higher physical properties than said first material, to the general configuration of the protective closure to be formed;
c. Slip-fitting said second formed material to said first formed material;
d. Permanently bonding said first material to said second material and setting said materials to the configuration of the protective closure to be formed by:
i. Placing said slip-fitted first and second materials in the proximity of a die of the protective closure to be formed;
ii. Destroying the memory of both said slip-fitted materials by subjecting said slip-fitted materials to a high energy impulse force to force said first material against said second material and force both slip-fitted materials to assume the configurations of the die.

4,061,140
UNDERWATER BREATHING DEVICE
Masayasu Saito, No. 2-1 Higashibonoshima, Minoo, Osaka, Japan
Filed May 5, 1976, Ser. No. 683,524
Claims priority, application Japan, Feb. 2, 1976, 51-21384
Int. Cl.^{2} A62B *7/00*
U.S. Cl. 128—145 A 1 Claim

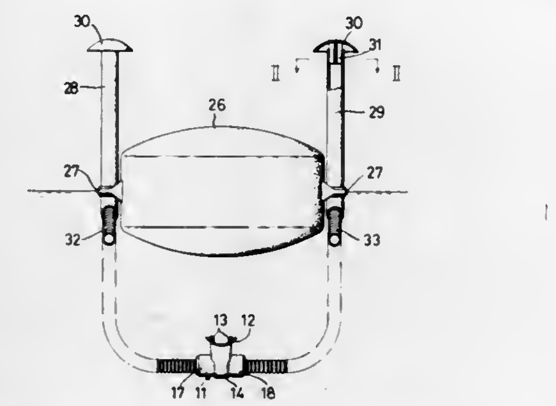

1. An underwater breathing device comprising:
a float means for floating on the surface of water;
a hollow tubular T-shaped mouthpiece having a central hollow vertical member and two hollow lateral cross-members joined to said vertical member on opposite sides thereof;
first and second tubes, each tube being inserted into and slightly projecting outwardly from one of said lateral cross-members, said tubes fitting into said cross-members in a water-tight relationship;
first check valve means in said first tube for opening toward said central vertical member only when air is inhaled through said vertical member;
second check valve means in said second tube for opening away from said central vertical member only when air is exhaled into said vertical member, whereby only one of said first and second valve means is open at one time;
a first flexible hose fitted into said first tube and extending therefrom;
a second flexible hose fitted into said second tube and extending therefrom;
first and second upright pipes connected to said float means and projecting thereabove, said pipes having a vertical portion and an angled portion at the lower end thereof, said lower angled portion of said first and second upright pipes being connected to said first and second flexible hoses respectively at the end of each hose opposite the end fitted into said tube; and
umbrella type cover means fitted into said vertical portion of said first and second upright pipes for preventing water from entering into said pipes.

4,061,141
APPARATUS AND METHOD FOR SELECTIVELY SEPARATING AMINO ACIDS AND DEFINED PROTEINS IN BLOOD
Viktor Holger Hydén, Prastgardsgaten 2, and Fritz Victor Hasselblad, St. Eriks Torg 3, both of Goteborg, Sweden
Continuation-in-part of Ser. No. 850,576, Aug. 15, 1969, abandoned. This application Feb. 4, 1972, Ser. No. 223,577
Claims priority, application Sweden, Mar. 21, 1969, 4029/69
Int. Cl.^{2} A61M *1/03*
U.S. Cl. 128—214 R 18 Claims

1. An apparatus for selectively separating by enzymatic degradation amino acids and defined proteins from blood for therapeutic purposes, comprising walls forming a chamber, means positioned within said chamber forming at least one laterally closed and impervious passage therethrough, an inlet to said flow passage, an outlet from said flow passage a first tube for connecting said inlet to a human artery, a second tube for connecting said outlet to a human vein so that a closed

system is provided for withdrawing blood from an artery, passing it through the flow passage in said chamber and returning it to a vein, a carrier material disposed within said flow passage for direct contact with the blood flowing therethrough

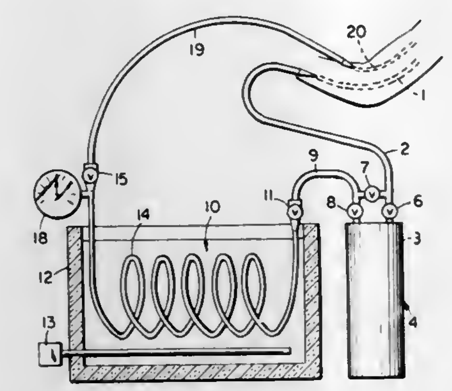

and an enzyme suitable for separating one of an amino acid or a defined protein from blood fixed to said carrier material in an insolubilized manner for forming an active substance which effects a selective separation of at least one of the particular substances from the blood.

4,061,142
APPARATUS FOR CONTROLLING BLOOD FLOW
Glenn L. Tuttle, Bountiful, Utah, assignor to Sandoz, Inc., E. Hanover, N.J.
Filed June 16, 1976, Ser. No. 696,734
Int. Cl.^{2} A61M *1/03*
U.S. Cl. 128—214 R 12 Claims

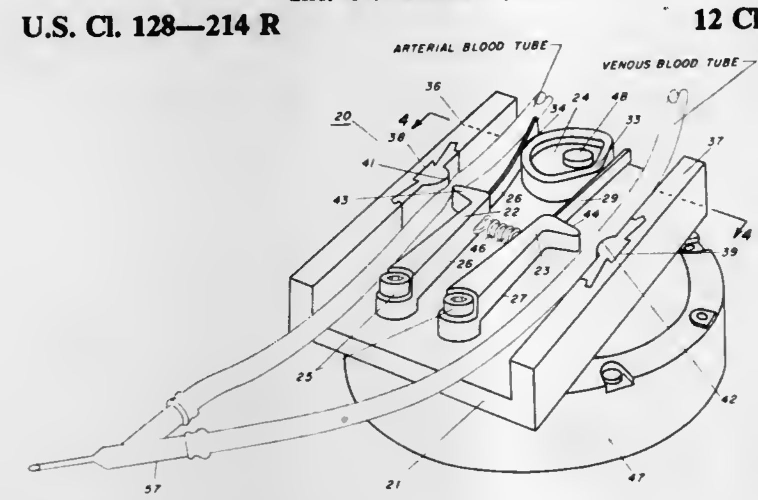

1. An apparatus for controlling blood flow through a pair of blood tubings in a single needle alternating blood flow system, which comprises in combination a support frame, a pair of pivotly mounted clamping arms connected to said frame and mounted parallel to one another, said arms having a leaf spring affixed to the non-pivot end of each clamping arm and extending axially therefrom, a rotatable cam positioned between and in slidable engagement with the leaf springs, and means for actuating the cam, whereby the cam moves the leaf spring-clamping arms to alternately occlude and non-occlude a blood tubing.

4,061,143
MEDICAL ADMINISTERING NEEDLE ASSEMBLY WITH FILTER MEANS
Soji Ishikawa, No. 8-5, 1-chome, Kamata, Setagaya, Tokyo, Japan
Filed June 10, 1976, Ser. No. 694,794
Int. Cl.^{2} A61M *5/32*
U.S. Cl. 128—218 N 9 Claims

1. A medical administering needle assembly having longitudinally aligned foremost and rearmost ends as regards the direction in which a fluid is to be forced to flow through the assembly when the assembly is in use, comprising:
a generally tubular body portion which is formed with a longitudinal passageway having an axis therethrough and open at the rearmost end of the body portion and which has a front end wall formed with an opening at the foremost end of the passageway, the front end wall having at the foremost end of the passageway an annular inner face having an outer circumferential end at the foremost end of the inner peripheral surface of the body portion and an inner circumferential end circumscribing the rearmost end of said opening, said end wall being further formed with a plurality of projections protruding rearwardly from said annular inner face and spaced apart from each another about said axis of the passageway in the body portion, said projections having respective rear end faces in a common plane substantially perpendicular to said axis;
a tip portion forwardly projecting from said front end wall and formed with a longitudinal passageway rearwardly

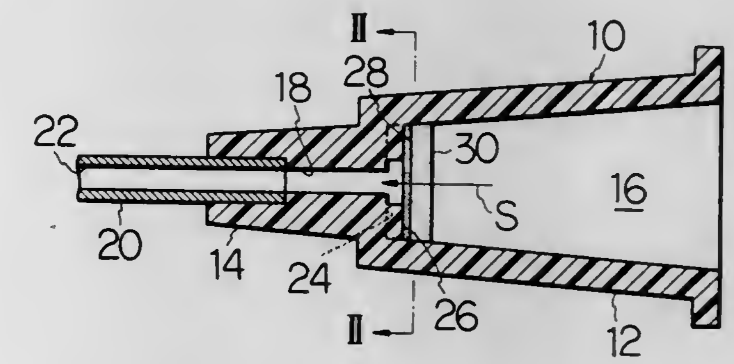

merging with said opening and communicating with the passageway in the body portion through the opening;
a first disc-shaped filter element located within the passageway in the body portion and having a front end face in contact with said rear end faces of said projections; and
a second disc-shaped filter element located within the passageway in said body portion rearwardly of said first filter element and having a front end face in contact over substantially its entire area with the rear end face of said first filter element, each of the first and second filter elements having its outer peripheral surface closely received on the inner peripheral surface of said body portion and being formed with a multiplicity of voids, the first filter element being denser than the second filter element and the voids in the first filter element being smaller in size than the voids in the second filter element.

4,061,144
DISPOSABLE SYRINGE
Robert L. Strickman, 729 Handwerg Drive, River Vale, N.J. 07675, and Melvyn B. Strickman, Academy St., Shiloh, N.J. 08353
Filed May 10, 1976, Ser. No. 684,906
Int. Cl.^{2} A61M *7/02*
U.S. Cl. 128—227 2 Claims

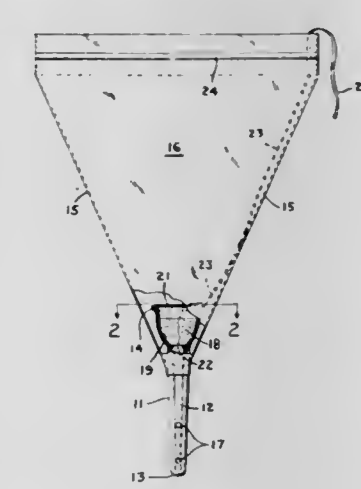

1. A disposable compact vaginal syringe comprising in combination the following:
a tubular nozzle having an axial passage therethrough,

the nozzle having a first end insertable into a vaginal cavity of a user and a second end connected in sealed engagement with a foldable flexible bag which is holdable in the user's hand and which encloses a reservoir,
the nozzle provided with a compartment in the second end thereof to store douche powder therein,
the axial passage communicating in flow series between the reservoir and at least one spray opening in the first end of the nozzle,
the bag provided with an opening whereby the reservoir is fillable with water,
the bag having a tongue in groove seal to close the opening,
at least one membrane enclosing the douche powder in the compartment,
a pull member connected to the membrane and extending out of the bag via the opening for tearing the membrane to release the douche powder into the water in the reservoir, the reservoir squeezable manually by the user to inject the water with the douche powder dissolved therein into the user's vaginal cavity for cleansing thereof.

4,061,145
ABSORBENT FOAM ARTICLES AND METHOD OF MANUFACTURE
Thomas A. DesMarais, Cincinnati, Ohio, assignor to The Procter & Gamble Company, Cincinnati, Ohio
Division of Ser. No. 635,458, Nov. 26, 1975, Pat. No. 3,994,298, which is a continuation-in-part of Ser. No. 543,192, Jan. 22, 1975, abandoned. This application Sept. 27, 1976, Ser. No. 727,090
Int. Cl.[2] A61F *5/44, 13/20*
U.S. Cl. 128—275 **6 Claims**

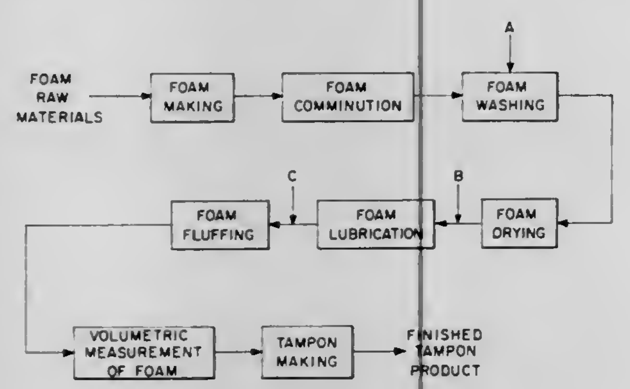

1. A living body fluid receptor comprising a body contacting means enclosing an absorbent, resilient particulate foam material which has been lubricated and treated with surfactant.

4,061,146
TISSUE MACERATING INSTRUMENT
Edward F. Baehr, Berea, and James E. Burnett, Cleveland, both of Ohio, assignors to The United States of America as represented by the Administrator of the National Aeronautics and Space Administration, Washington, D.C.
Filed Apr. 15, 1976, Ser. No. 677,353
Int. Cl.[2] A61B *17/32*
U.S. Cl. 128—305 **13 Claims**

1. In a tissue macerating instrument of the type having a rotatable rod with a cutter member at one end, said rod being disposed in a tube which itself is disposed in an extension of a handle, the improvement comprising:
a frusto-conical member attached at its small end to said extension, the large end being a tissue engaging edge,
at least one aperture in said extension adjacent said frusto-conical member;
an annular intermediate wall extending longitudinally between the small end of said frusto-conical member and one end of said tube, and having
an inflow aperture in said intermediate wall in communication with said at least one aperture in said extension,

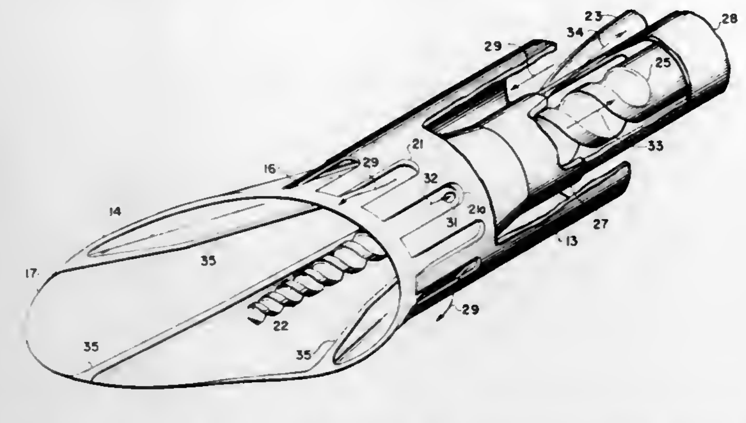

the interior of said tube being in communication with an outflow passageway.

4,061,147
COMPOSITE CIGARETTE ENVELOPING MATERIAL
Ennio Falchi, V.le di Villa Pamphili, 37/B, Rome, Italy
Filed May 22, 1975, Ser. No. 580,469
Claims priority, application Italy, May 22, 1974, 51165/74
Int. Cl.[2] A24D *1/12*
U.S. Cl. 131—4 A **5 Claims**

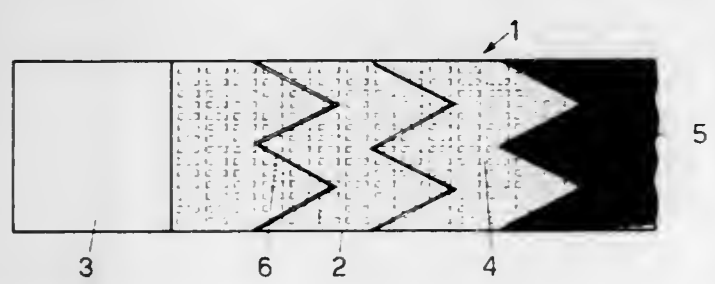

1. A composite material for enveloping cigarette tobacco comprising an incombustible structure combined with cigarette paper, wherein said incombustible structure consists of a plurality of distinct sections, wherein said distinct sections are joined together by easily detachable junction points.

4,061,148
PERFORATING APPARATUS FOR ARTICLES
John Keith Goslin, Beeston, and Thomas Clifford Tomlinson, Tollerton, both of England, assignors to Imperial Group Limited, London, England
Filed Sept. 28, 1976, Ser. No. 727,693
Claims priority, application United Kingdom, Oct. 11, 1975, 41739/75
Int. Cl.[2] A24C *5/30;* **B26D** *9/00*
U.S. Cl. 131—23 R **6 Claims**

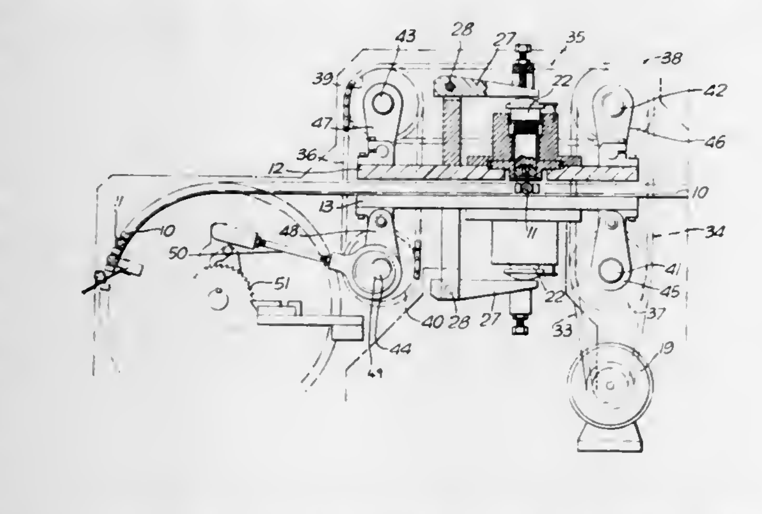

1. Apparatus for perforating a succession of cigars comprising:

first and second opposing parallel plates which define a perforating position therebetween; conveyor means for conveying a succession of cigars to the perforating position; means for interrupting the travel of the cigars during perforation; means for causing the plates to hold each cigar during its perforation and to thereafter to release the perforated cigar, one of the plates including an aperture therein located opposite the perforating position; a stripper plate, extending across the aperture and provided with a guide passage therein, for separating each perforated cigar after perforation; a reciprocating perforator arranged to operate through the guide passage in the stripper plate; and means for causing the perforator to reciprocate along a line at right angles to a cigar in the perforating position so as to penetrate the side of the cigar and then withdraw therefrom with the stroke of the perforator being such that the perforator only partly penetrates the cigar; said stripper plate separating each perforated cigar from the perforator during the withdrawal stroke of the perforator.

4,061,149
ASH TRAY WITH SMOKE EXHAUSTER
Mark Bogdan Raczkowski, 55C Bruan Place, Clifton, N.J. 07012
Filed Sept. 7, 1976, Ser. No. 721,174
Int. Cl.[2] A24D *1/12;* **A24F** *13/16*
U.S. Cl. 131—231 **2 Claims**

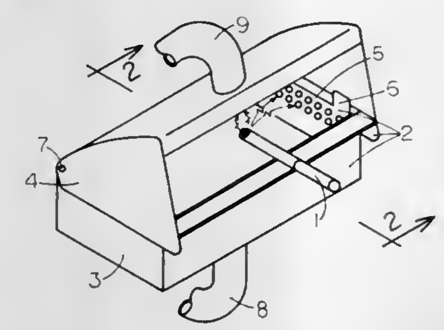

1. An ash tray unit, for installation on a vehicle, comprising:
a housing with an open top and having a bottom or side opening;
a hood means movably mounted on said housing and having an opening in an upper portion thereof;
an ash tray insert with an open top, mounted inside of said housing and having numerous side openings in the upper portion thereof;
corner support means between said housing and said ash tray insert for supporting said ashtray on said housing and providing space therebetween;
an self exhauster means with a funnel inlet, said self exhauster having an inlet opening having a stone shield screen mounted thereon, an outlet opening, and inclined duct branch means extending between said inlet and outlet openings;
a top exhaust duct between said hood opening and one said duct branches a bottom exhaust duct between said housing bottom or side openings and said another of said duct branches, whereby smoke from a cigarette in said ashtray is exhausted from said housing through said self exhauster means by air passing through said inlet opening when the vehicle is in motion.

4,061,150
QUATERNARY AMMONIUM COMPOUNDS IN PRETREATMENT OF HAIR BEFORE SHAMPOOING WITH AN ANIONIC SHAMPOO
George F. Dasher, Inverness; Kathleen A. O'Cull, Northlake, and Thomas J. Schamper, Chicago, all of Ill., assignors to Alberto-Culver Company, Melrose Park, Ill.
Continuation-in-part of Ser. No. 538,891, Jan. 6, 1975, Pat. No. 3,980,091. This application July 29, 1976, Ser. No. 709,782
The portion of the term of this patent subsequent to Sept. 14, 1993, has been disclaimed.
Int. Cl.[2] A45D *7/00;* **A61K** *7/08*
U.S. Cl. 132—7 **15 Claims**

1. A method of treating hair to improve the manageability thereof, which comprises initially contacting the hair with a dilute aqueous composition containing a water-soluble quaternary ammonium compound containing at least one long chain aliphatic hydrocarbon radical directly or indirectly linked to a quaternary nitrogen atom in said quaternary ammonium compound, and then shampooing the hair with an anionic shampoo.

4,061,151
GUTTER MANIPULATING APPARATUS AND METHOD
Edwin J. Ward, 13839 Clifton Blvd., Lakewood, Ohio 44107
Filed Sept. 15, 1975, Ser. No. 613,444
Int. Cl.[2] B08B *7/02;* **E04D** *13/06*
U.S. Cl. 134—33 **20 Claims**

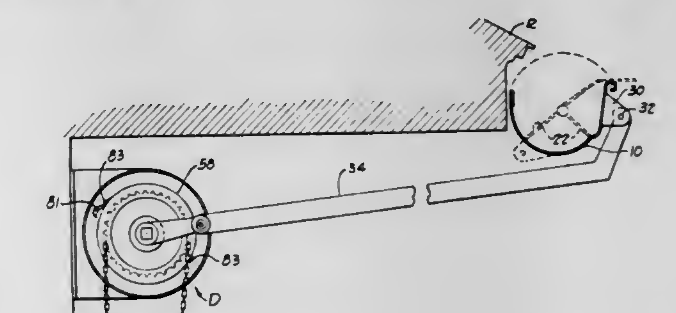

15. A method for manipulating a gutter to facilitate dumping of debris from the gutter, comprising the steps of:
a. supporting the gutter for rotation about a longitudinal axis of the gutter, said longitudinal axis being located within the gutter between its upper edge and its bottom whereby the radius of rotary motion of the gutter is less than its depth, and
b. imparting reciprocatory rotary motion to the gutter about the longitudinal axis in response to the application of power thereto in a continuous and uniform fashion.

20. Apparatus for manipulating a gutter to assist in dumping debris therefrom, comprising:
a. structure for mounting the gutter for rotative motion about a longitudinal axis of the gutter; and
b. rotation imparting structure connected to the gutter including:
i. a rotatable cranking element, and
ii. structure connecting the cranking element to the gutter and being responsive to rotation of the crank to rotate the gutter over an angular displacement substantially equal to that of the rotative motion of the cranking element.

4,061,152
CONTAINER WASHING APPARATUS
Momir Babunovic, Des Peres, Mo., assignor to Barry-Wehmiller Company, St. Louis, Mo.
Continuation of Ser. No. 605,279, Aug. 18, 1975, abandoned. This application Dec. 10, 1976, Ser. No. 748,840
Int. Cl.[2] B08B *3/02, 9/08*
U.S. Cl. 134—73 **11 Claims**

1. Container washing apparatus comprising a washing solu-

tion containing compartment, container carrier conveyor means operable to carry containers in a loop path which is directed downwardly and then upwardly through said compartment, imperforate guide means in said compartment in position to be engaged by the containers in the downward and upward travel, said guide means being interrupted at a zone above the bottom of the loop path where said carrier conveyor and the containers will transverse the interruption, nozzle means disposed adjacent to said interruption in said guide means to deliver a flow of fluid to pass over the containers and through said carrier conveyor for flushing labels therefrom, a

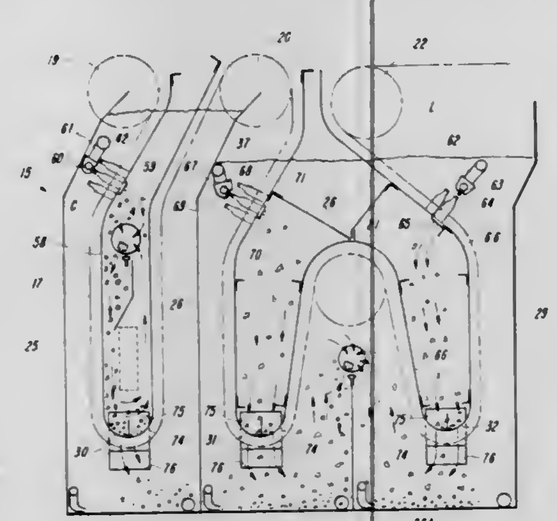

pump outside of said compartment having an outlet connected to said nozzle means and an inlet connected into said compartment to receive washing solution from said compartment and circulate it through said nozzle means back to said compartment, filter means submerged in said compartment and located to cover said pump inlet connection into said compartment, said filter means operating to exclude labels from the washing solution drawn in by said pump and a branch connection from said pump outlet extending into said filter means to return filtered washing solution to said filter means to flush labels therefrom.

4,061,153
PAINT ROLLER CLEANING APPARATUS
Thomas E. Doherty, 7 Carriage Lane, Setauket, N.Y. 11733
Filed Sept. 28, 1976, Ser. No. 727,462
Int. Cl.² B08B *3/02*
U.S. Cl. 134—138 **1 Claim**

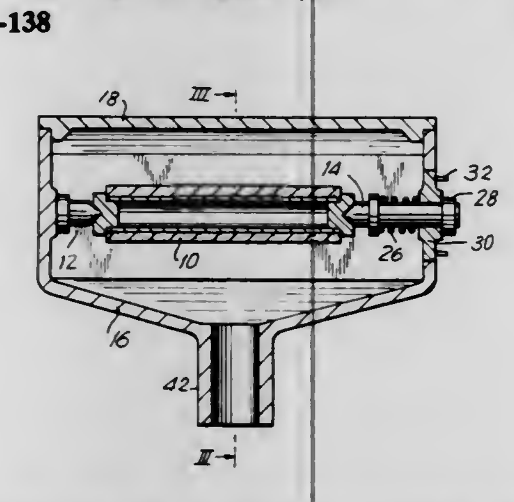

1. A paint roller cleaning arrangement comprising, in combination, a housing; bearing means within said housing for supporting rotatably a paint roller to be cleaned; cleaning fluid inlet means on said housing for admitting a stream of fluid into the interior of said housing to impinge on the surface of a roller; means for directing said stream onto said roller so that the force applied to the surface of the roller by the stream rotates the roller about said bearing means for exposing the full roller surface to said stream; said stream of cleaning fluid being directed along the full length of said roller simultaneously; centrally-located drain fluid drain means on said housing and communicating centrally with the interior of said housing for draining fluid therefrom after passing over the surface of said roller, fluid to be drained being collected centrally within the interior of said housing and being directed through said drain means; elongated rectangular — shaped orifice means on said inlet means and extending along the length of said roller when supported in said bearing means, said fluid passing through said orifice means prior to impinging on said roller; said bearing means including an axially slidable conically-shaped bearing member urged against one end of said roller by spring means; a threaded end cap supporting said bearing member and held within a threaded opening in one end of said housing; cover means on said housing for admitting said roller in the interior thereof and closing said housing prior to applying cleaning fluid to said roller; slot means in said threaded cap for admitting a handle attached to said paint roller; and closure means for sealingly covering said slot means for admitting said handle; said orifice means being mounted above the axis of rotation of said roller means on said bearing means and extending along substantially the full length of said roller.

4,061,154
UMBRELLA WITH INTERCHANGEABLE TOPS
James L. Cox, 4604 Arch Court, Orlando, Fla. 32808, and Jack M. Pippin, P.O. Box 254, Altamonte Springs, Fla. 32701
Filed May 6, 1976, Ser. No. 683,831
Int. Cl.² A45B *15/00. 25/18*
U.S. Cl. 135—34 **9 Claims**

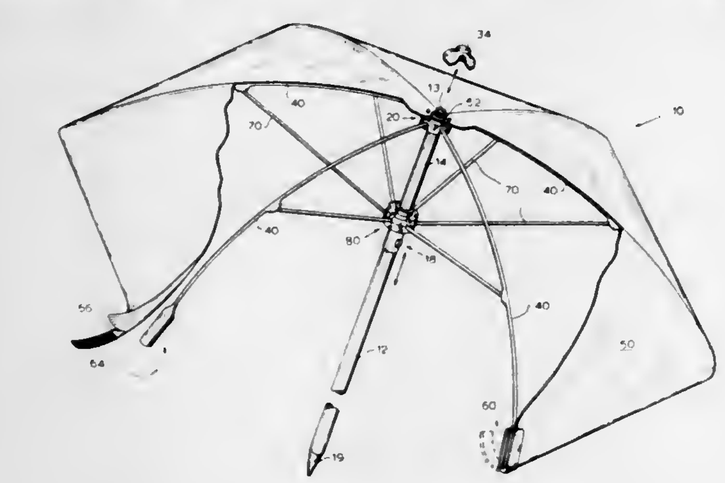

1. An umbrella comprising in combination:
a vertical shaft having a top end and a lower end defined at the opposite extremity thereof;
a first rib disc and a second rib disc attached coaxially therewith for defining therebetween a plurality of rib ball receptacles each having a downwardly, outwardly and radially extending slot coupled thereto, with said first and second rib discs each having a central aperture coaxially therein for having said vertical shaft coupled therethrough adjacent said top end thereof;
a plurality of substantially equally spaced ribs each having a rib ball attached to one end thereof for movably coupling within one of said rib ball receptacles, with each of said ribs communicating through one of said radially extending slots for coupling within said first and second rib discs, whereby each of said ribs may collapsibly fold along and be extended from said vertical shaft;
a first support disc and a second support disc juxtaposed coaxially therewith for defining therebetween a plurality of support ball receptacles each having an upwardly and outwardly extending slot coupled thereto, within said first and second support disc each having a central aperture coaxially therein for movably receiving said first vertical shaft therethrough, whereby said first and second support discs move longitudinally along said vertical shaft as said umbrella is collapsibly folded;
a detachable cover coupled at a central portion thereof to said top end of said vertical shaft;
a plurality of support ribs for providing a bowing force on each of said ribs, with a first end of each of said support ribs including thereon a support ball for being movably restrained within one of said support ball receptacles defined by said first and second support discs, a second end of each of said support ribs movably connected to one of said ribs intermediate said end of said ribs;
a detachable cover coupled at a central portion thereof to said top end of said vertical shaft;
a first fabric coupler attached to a distended end of each of said ribs and a second fabric coupler attached to a circumferential edge section of said attachable cover and extending radially beyond said edge section a sufficient dimension to be folded back under said distended end of one of said ribs, each of said first fabric couplers juxtaposed with and removably coupled to one of said second fabric couplers for stretching said detachable cover over said plurality of ribs.

4,061,155
ELECTROHYDRAULIC CONTROL SYSTEM
Klaus Sopha, Stuttgart, Germany, assignor to Robert Bosch G.m.b.H., Stuttgart, Germany
Filed Apr. 7, 1976, Ser. No. 674,739
Claims priority, application Germany, May 28, 1975, 2523600
Int. Cl.² G05D *7/06*
U.S. Cl. 137—85 **3 Claims**

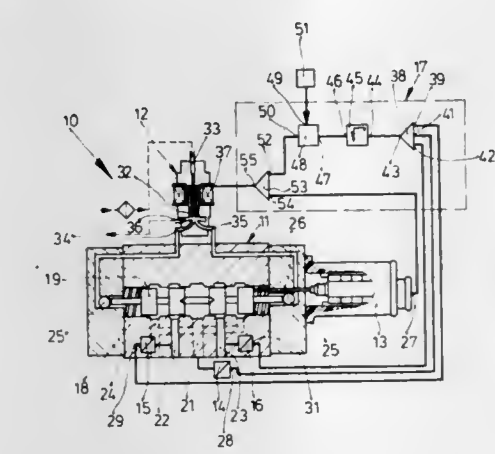

1. In an electrohydraulic control system, in combination, a way valve of the type comprised of a housing, fluid inflow and consumer ports in the housing, and at least one valve member movable in the valve housing for establishing connections between ports; positioning means operative for receiving an electrical input signal and positioning the valve member in dependence thereon; desired-value selector means for generating a desired-value signal indicative of a desired volumetric flow rate for the flow of fluid into the fluid inflow and out the consumer ports; transducers operative for sensing the position of the valve member and the pressures at the inflow and consumer ports and generating corresponding electrical feedback signals; and circuit means connected to the desired-value selector means and to the transducers and operative for compensating for the effect upon said volumetric flow rate of variations in the hydraulic loading of consumers supplied via the way valve by furnishing said electrical input signal to the positioning means as a predetermined function of both desired-value and feedback signals, the circuit means including a first difference amplifier having inputs connected to the outputs of respective ones of the pressure-sensing transducers, a square-root extractor having an input connected to the output of the first difference amplifier, a divider having a first input connected to the output of the square-root extractor and a second input connected to the output of the desired-value selector means, a second difference amplifier having a first input connected to the output of the divider and a second input connected to the output of the one of the transducers which senses the position of the valve member, the output of the second difference amplifier being connected to the input of the positioning means for furnishing said electrical input signal thereto.

4,061,156
TRANSITION MODULE FOR A PNEUMATIC SEQUENCER AND AN ASSOCIATED SEQUENCER
Jean Gachot, 26 bis, Avenue de Paris, Soisy-Sous-Montmorency, Val d'Oise, and Siméon Lekarski, 138, Boulevard de la Republique, Saint-Cloud, Hauts-de-Seine, both of France
Filed Mar. 15, 1976, Ser. No. 667,219
Claims priority, application France, Mar. 20, 1975, 75.08720
Int. Cl.² F16K *11/00;* **F15C** *3/00*
U.S. Cl. 137—109 **11 Claims**

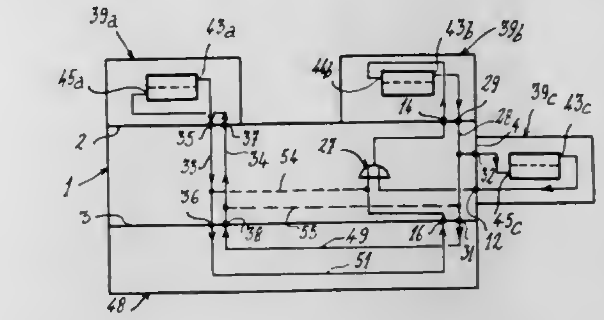

1. A universal transition module for a pneumatic sequencer, in particular for a sequencer having a branched flow diagram, said module being intended to be assembled with three action modules, two of said action modules being located upstream and producing action in conjunction on the third action module located downstream, or one of said action modules being located upstream and producing action in disjunction on the both other action modules located downstream, each action module being provided with a control input to receive a control signal, an inhibition input to receive an inhibition signal and an output to deliver an output signal, said transition module being an integral block comprising:
an elementary logical gate for receiving two input signals by means of respective ducts terminated by two input ports of said gate, and for delivering one output signal by means of a one duct terminated by one output port of said gate, said input ports of said gate being so disposed as to receive the output signals of the both action modules located upsteam or of the two action modules located downstream, and said output port of said gate being so disposed as to deliver the output signal of said gate to the control input of the one action module located downstream or to the inhibition input of the one action module located upstream;
a Y-duct provided with one input port and two output ports so disposed to transmit the output signal of the one action module located downstream to the inhibition input of the both action modules located upstream, or to transmit the output signal of the one action module located upstream to the control inputs of the both action modules located downstream.

4,061,157
RECIPROCATING VALVE HAVING STEM CLEANING MEANS
Albert J. Hanssen, North Kingstown, R.I., assignor to International Telephone and Telegraph Corporation, Nutley, N.J.
Filed Jan. 27, 1976, Ser. No. 652,672
Int. Cl.² F16K *41/00*
U.S. Cl. 137—242 **13 Claims**

1. In a valve of the type that has a body with a valve seat disposed therein, a valve member disposed in said body for engagement with the valve seat and a reciprocating valve stem attached to said valve member and having a portion exposed by extending out of the valve body, the improvement comprising:
first means fixedly mounted to the valve body and disposed about the valve stem at a position where said stem extends from said body for removing foreign matter from the exposed portion of the valve stem as the stem is reciprocated into the valve body; and

bearing means disposed between said first means and said reciprocating valve stem for providing a tight fitting

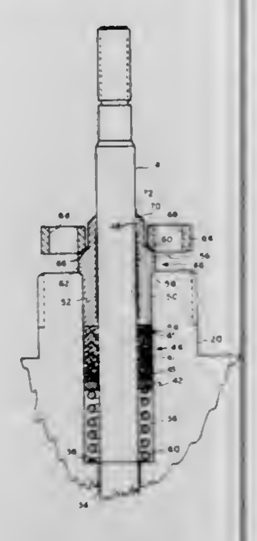

non-seizing bearing surface between said first means and the valve stem and for positioning said first means relative to the valve stem.

4,061,158
VALVE WITH COMBINATION LOCK AND REMOTE CONTROL
George J. Musial, 13 Townsend Road, Lynnfield, Mass. 01940
Filed Nov. 22, 1976, Ser. No. 744,034
Int. Cl.² F16K *37/00*
U.S. Cl. 137—552.5 **9 Claims**

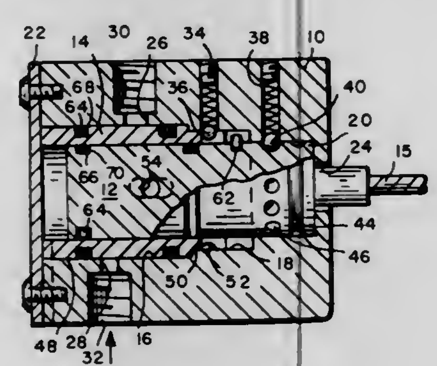

1. A combination lock and remote control valve comprising a valve body containing a valve chamber and spaced ports, an actuator and concentric telescopically mounted sleeve in the valve chamber, said actuator and sleeve containing openings adapted at times to be oriented with respect to said spaced ports in the valve body to provide for a continuous passage through the valve body, means for rotating the actuator and moving it axially in the chamber, said sleeve containing an internal axial groove, means normally releasably locking the sleeve in a predetermined position, a pin fixed to the actuator movable with the actuator in rotation to position it opposite said axial groove in the sleeve at said predetermined position and axially along said groove to disable said last means, said actuator being thereafter rotatable to effect rotation of the released sleeve to align the openings in the sleeve with said spaced ports, movable axially to lock the sleeve in its open position, rotatable to align the openings therein with the openings in the sleeve and, finally, axially to engage the pin with the sleeve to lock the several components in the open position of the valve.

4,061,159
HYDRAULIC VALVE
Kornelius Brakel, Schwieberdingen, Germany, assignor to Robert Bosch G.m.b.H., Stuttgart, Germany
Filed Oct. 8, 1976, Ser. No. 730,714
Claims priority, application Germany, Dec. 17, 1975, 2556708
Int. Cl.² F17D *3/00*
U.S. Cl. 137—596 **10 Claims**

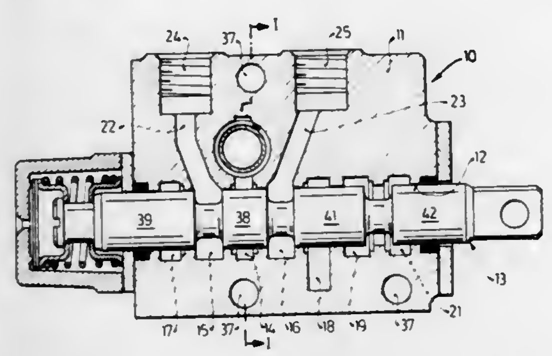

1. A hydraulic valve, comprising a valve body having a fluid inlet chamber, a user chamber arranged for communication with a user of the fluid admitted into said valve body, a fluid return chamber for recovering fluid from the user, a flow channel arranged for communication with a source of fluid and with said fluid inlet chamber, and a passage connecting said chambers; a spool movably mounted in said passage, said spool having a first position in which said user chamber is in communication with said fluid inlet chamber and is sealed from said return chamber, and said spool having a spool position in which said user chamber is in communication with said return chamber and is sealed from said inlet chamber; and a valve element for selectively sealing said inlet chamber from said flow channel and for selectively providing communication between said inlet chamber and said flow channel, said valve element including a movable sealing member which is arranged in said flow channel, and said sealing member having one position in which said inlet chamber is sealed from said flow channel and another position in which said inlet chamber communicates with said flow channel, said sealing member being provided with a conduit having a pair of ends which open to said flow channel, and said sealing member having a face which is exposed to said flow channel so as to be subjected to the pressure acting in said flow channel, said valve element further including a biasing member biasing said sealing member towards said one position.

4,061,160
CONTROL VALVE
James S. Kashmer, Budd Lake, N.J., and Charles R. Tobin, Coopersburg, Pa., assignors to Air Products and Chemicals, Inc., Allentown, Pa.
Filed Oct. 8, 1976, Ser. No. 730,906
Int. Cl.² F16K *11/22*
U.S. Cl. 137—637.2 **12 Claims**

1. A control valve comprising:
a manifold sleeve including a fluid inlet, a sensor outlet and a fluid outlet all of which link the interior of the manifold sleeve to the exterior thereof, said sleeve having a proximal and a distal end with the fluid inlet being located adjacent the distal end;
a hollow plug mounted in the distal end of said sleeve to seal it, the interior of said plug being in concentric alignment with the interior of said sleeve, said plug including a portion which extends longitudinally into the interior of the sleeve;
a hollow valve housing mounted on the proximal end of said sleeve to seal it, the interior of said housing being in concentric alignment with the interior of said sleeve;
a first valve member, generally tubular in cross-section, which is reciprocally and concentrically mounted within said sleeve, in juxtaposition with the interior walls thereof, said valve member terminating proximate said fluid inlet in a valve surface, said valve member also including a radial passageway proximate each of said sensor and fluid outlets;
a seating surface mounted on said longitudinally extending portion of said plug, which acts in conjunction with said valve surface and which, at one extreme of reciprocation of said first valve member, completely blocks flow through said inlet and which, at the other extreme of reciprocation, permits maximum flow;
a second valve member, mounted on said first valve member and linked thereto, for reciprocation therewith, said second member having a proximal portion extending into and mounted in said valve housing, and a distal axially extending tapered valve which terminates within the tubular portion of said first valve member;
a longitudinally extending valve slider mounted reciprocally and concentrically within said first valve member, said slider including, at one end, a seat portion which mates

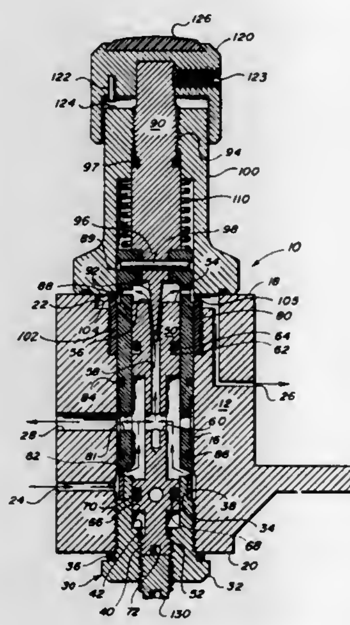

with the tapered valve of said second valve member to control flow rate to said fluid outlet, and a terminal portion at the other end which is retained in the hollow plug, said valve slider further including passageways linking both said fluid inlet and said sensor outlet with said seat portion;
means for reciprocating the combination if said first and second valve members with respect to said manifold sleeve, between predetermined limits; and
means for reciprocally positioning the valve slider with respect to the first valve member to adjust the spacing between the tapered valve and the seat portion of said valve slider;
whereby whenever there is flow through the fluid inlet, the passageways in the valve slider providing a hydraulic control pressure at said sensor outlet and fluid to said seat portion for deliveryat adjustable flow rate to said fluid outlet.

4,061,161
ANTI-EXTRUSION GROMMET ASSEMBLY FOR PRESSURE ACCUMULATOR LIQUID VALVE
Edward M. Greer, Beverly Hills, Calif., assignor to EMG Hydraulics, Inc., Santa Monica, Calif.
Filed Feb. 23, 1976, Ser. No. 660,365
Int. Cl.² F16L *55/04*
U.S. Cl. 138—30 **2 Claims**

1. A pressure accumulator including a rigid shell having a circular opening at one end thereof, and a valve assembly mounted in the opening, said valve assembly comprising: a tubular housing having an outer diameter less than the diameter of the opening and having a peripheral shoulder formed at the inner end thereof whose outer diameter is less than than the diameter of the opening; a retaining ring formed of a plurality of arcuate segments mounted coaxially with the tubular housing and configured to engage said peripheral shoulder thereof and to engage the inner surface of the shell around the opening; a resilient ring mounted concentrically with the inner end of the tubular housing and having an outer peripheral surface

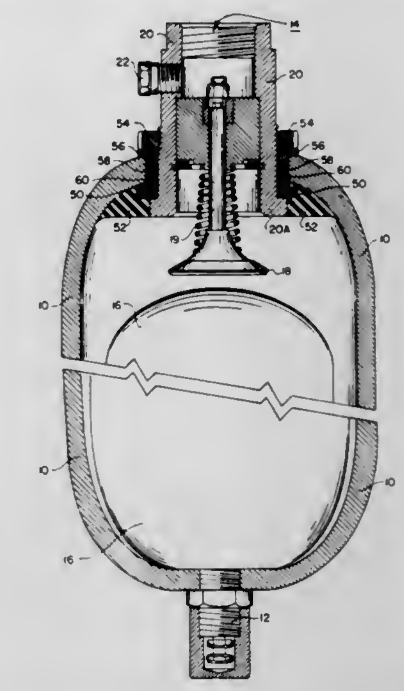

engaging the inner surface of the container, said retaining ring having a plurality of holes extending therethrough, and portions of said resilient ring extending into said holes to anchor said resilient ring to the arcuate segments of the retaining ring.

4,061,162
HIGH TEMPERATURE AND SHOCK RESISTANT INSULATED PIPE
Henry B. Jones, and Dorrance P. Bunn, Jr., both of Houston, Tex., assignors to Texaco Inc., New York, N.Y.
Filed Dec. 27, 1976, Ser. No. 754,786
Int. Cl.² F16L *9/14*
U.S. Cl. 138—147 **14 Claims**

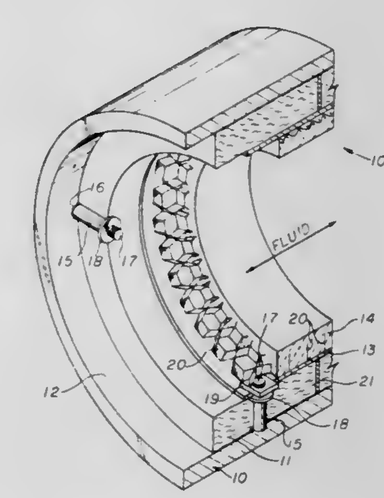

1. A high temperature and shock resistant insulated pipe for transporting high velocity gas or fluidized solids comprising,
a. a pipe having an inner surface,
b. a batt of fiber felt secured to said pipe inner surface,
c. a high temperature resistant metal shield mounted contiguous with the inner surface of said fiber felt batt and secured to the pipe inner surface, and
d. an erosion resistant and metal reinforced castable refractory mounted contiguous with the inner surface of said high temperature resistant metal shield and secured to the pipe inner surface for providing a high temperature resistant and high mechanical strength insulated pipe.

4,061,163
METHOD OF FILLING ELECTROCHEMICAL CELLS WITH ELECTROLYTE
John J. Decker, and Charles R. Ricards, both of Emporium, Pa., assignors to GTE Sylvania Incorporated, Stamford, Conn.
Filed July 6, 1976, Ser. No. 703,089
Int. Cl.² B65B *3/04*
U.S. Cl. 141—7 **7 Claims**

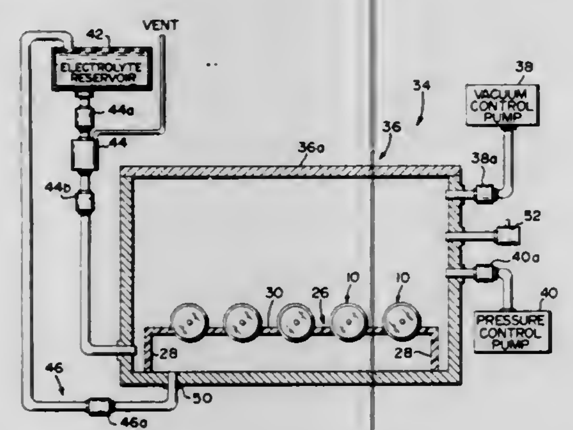

1. In a method of filling electrochemical cells with liquid electrolyte, said cells being comprised of positive and negative elements contained within a cell body which is provided with a fill port, the steps comprising: placing at least one of said cells in a controllable pressure chamber with said fill port down; evacuating said chamber to a first vacuum pressure below the boiling point of said liquid electrolyte for a first given period of time; increasing the pressure in said chamber to a second vacuum pressure above the boiling point of said electrolyte but below atmospheric; introducing a sufficient amount of electrolyte into said chamber to cover said fill port; increasing the pressure in said chamber to atmospheric; increasing the pressure to greater than atmospheric for a second given period of time; removing said remaining electrolyte by blowing from said chamber; venting said chamber to atmosphere; and removing said at least one cell.

4,061,164
POWDER FILLING MACHINE
Fumio Sato, Nishinomiya; Teruo Sakamoto, Hirakata; Seiichi Watashiro, Ikeda; Hayao Inoue, Osaka, and Yoshihito Yahata, Kawanishi, all of Japan, assignors to Shionogi & Co., Ltd., Osaka, Japan
Filed Oct. 7, 1976, Ser. No. 730,447
Claims priority, application Japan, Nov. 13, 1975, 50-136727
Int. Cl.² B65B *1/04*
U.S. Cl. 141—90 **20 Claims**

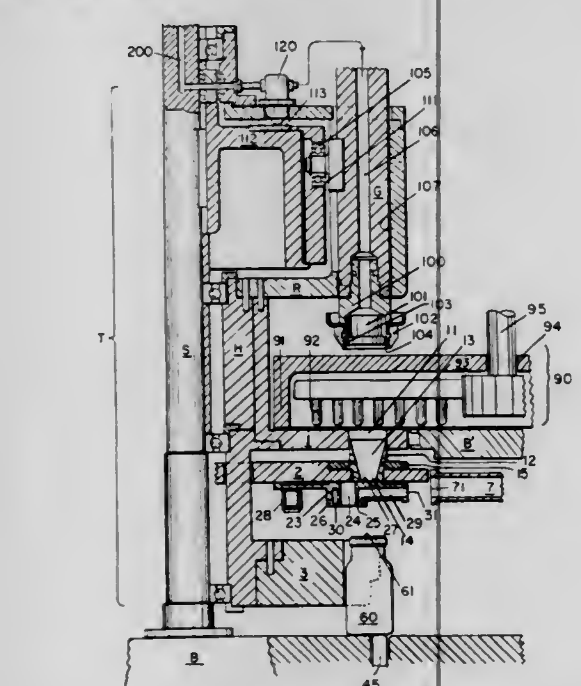

1. In the powder filling machine of the type wherein, (A) distribution of the powder to each of measuring-aperture aligned with constant spacings along a circle inside a circumference of a filling-turntable of flat surface rotatably supported around an upright center shaft mounted on a base of the machine of flat surface which also serves for carrying containers and equipped with a means for rotating the same, (B) measurement of the amount of the powder to be filled for a single shot, are performed by (a) forming a heap of powder into or around the aperture and then by (b) levelling off the heap with a reservoir for storing the powder mounted over the filling-turntable partly covering the surface of said turntable and having a closed side wall capable of (i) confining the powder within the reservoir and of (ii) levelling off the heap, and (C) sluicing-down of that measured amount of powder into an empty container placed underneath the measuring-aperture is effected by opening usually shut bottom outlet of the aperture in a timed sequence and in accordance with their angular position when they are in vertically aligned relationship, an improvement which comprises:

1. a measure-holding turntable having substantially the same configuration, including measure-receiving openings which correspond to the measuring-apertures, as the superimposing filling-turntable and being supported coaxial and rotatable with the filling-turntable, but permitted of vertical displacement with respect to the filling-turntable;
2. a plurality of bottomless inner measures, each having a hollow of inverted frusto-conical section and a straight outer stem, the root portion of which is secured by each of said measure-receiving openings and the upper portion is telescopically inserted into each of the measuring-apertures to form a composite measure of varying capacity, and
3. a means for adjusting the height of the measure-holding turntable to vary the capacity of said composite measure which is dependent upon the distance between the turntables, simultaneously with that of the container placed underneath the apertures to combine the mouth of the container with the bottom of the aperture.

4,061,165
PORTABLE TOOL
William James Harwood, Saginaw, and Robert P. Snyder, Bay City, both of Mich., assignors to William James Harwood, Saginaw, Mich.
Filed Aug. 16, 1976, Ser. No. 714,363
Int. Cl.² B27C *9/00;* B23D *67/00;* B23B *3/28*
U.S. Cl. 144—1 R **9 Claims**

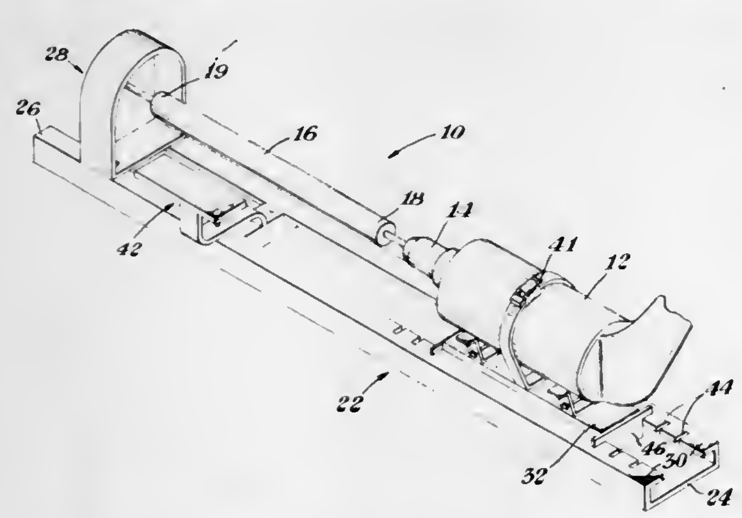

1. A portable apparatus for reducing the dimensions of a workpiece using rotatable work means comprising in combination:

a. a portable electric drill motor having a shaft-receiving chuck;
b. a journalled support member;
c. a working element support;
d. work means rotatable about its longitudinal axis and terminating at each of first and second ends in a portion extending in the axial direction and supported respectively by said chuck and by a journalled support member;
e. a guide member having supported thereon said electric drill motor;
f. a channelled base member having a first end and a second end and adapted to receive and adjustably support (1) adjacent the first end thereof said guide member, (2) adjacent the second end thereof said journalled support member, and (3) between said guide member and said journalled support member said working element support;
g. means for assuredly fixing each of said guide member, journalled support member, and working element support a predetermined distance along said base member;

said base member having mutually opposed inwardly extending flanges extending longitudinally along each lateral edge of a face of said base member;
said guide member being slidable longitudinally of said base member whereby the drill motor supported thereon is adjustably positionable with respect to the journalled support member;
said guide member having a support member having generally an inverted "U" shape in section with longitudinal edges terminating in outwardly extending flanges adapted to cooperatively engage the inwardly extending flanges of said base member; two spaced-apart U-shaped support brackets attached to said support member adjacent each end thereof, for holding in a cradle-like arrangement said drill motor; compression means extending through each of said support brackets for selectively adjusting the spatial separation between upstanding arms of said support brackets to adapt to the curvature and dimensions of a variety of portable electric drill motors and to permit the leveling of said portable electric drill motor so that the axis of said motor extends along a line substantially parallel to the plane of said base member; fastening means attached to said support member for securing said drill motor to said guide member; and
said base member being substantially coextensive with the combination of the guide member and said journalled support member.

4,061,166
FLAIL DELIMBER
Robert W. Larson, P.O. Box 1148, Thunder Bay, Ontario, Canada (P7C 4X9)
Filed Nov. 1, 1976, Ser. No. 737,480
Int. Cl.² B27L *1/00*
U.S. Cl. 144—2 Z **11 Claims**

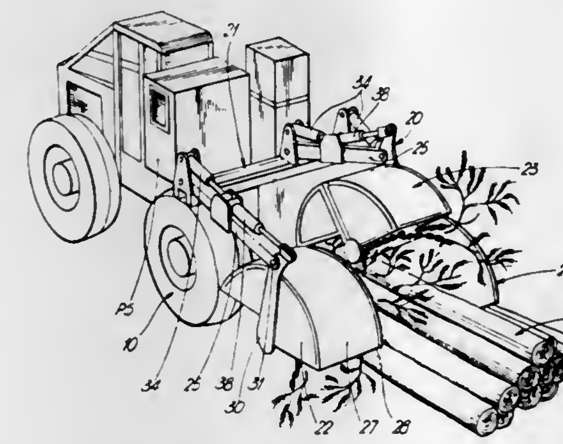

1. Apparatus for delimbing trees comprising:
a. a mobile self-propelled vehicle;
b. two or more flail delimber units disposed side-by-side and each individually movably mounted on said vehicle for movement in a vertical plane;
c. means connected to said vehicle and to said flail delimber units for raising and lowering the same independent of one another; and
d. sensing means controlling said raising and lowering means to automatically maintain a selected relative position between the respective flail delimber units and trees lying on the ground being processed during movement of the vehicle longitudinally along the trees to thereby maximize impact forces of the flail members on the limbs being removed.

4,061,167
SINGLE PIECE TREE SHEAR BLADE HAVING CYLINDRICALLY CURVED CUTTING PORTION AND METHOD OF MAKING SAME
James Knox Dunn, III, Dubuque; Lee Everett Tucker, Eldridge, and Andrew Paul Redman, Dubuque, all of Iowa, assignors to Deere & Company, Moline, Ill.
Filed Nov. 11, 1976, Ser. No. 741,288
Int. Cl.² B21D *17/02;* B21K *21/00;* A01G *23/08*
U.S. Cl. 144—34 E **10 Claims**

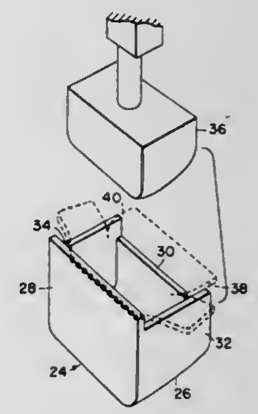

1. The method of making a tree shear blade having a cylindrically curved cutting portion, comprising: the steps of shaping a blank from a metal plate so as to have a central blade portion adapted for passing through a tree being sheared, first and second tab portion respectively at opposite ends of the central blade portion and a third tab portion at one side of the central blade portion; sharpening a second side of the central blade portion opposite from said one side thereof to form a cutting edge; placing the blank on a die shaped for causing the pair of tabs to be bent towards each other to form upright ends of the blade, for causing the third tab to be bent to form an upright back plate extending between the pair of tabs and for causing the central blade portion to become cylindrically curved; engaging the blank with a press foot, configured for moving the blank against the die and thereafter causing the press foot to so move the blank; removing the shaped blank from the die; and welding the tabs together.

4,061,168
LOG SPLITTING DEVICE
James Douglas Fariss, Jr., Wilmington, Del., assignor to Innovation Enterprises, Inc., Wilmington, Del.
Filed May 3, 1976, Ser. No. 682,725
Int. Cl.² B27L *7/00*
U.S. Cl. 144—193 R **3 Claims**

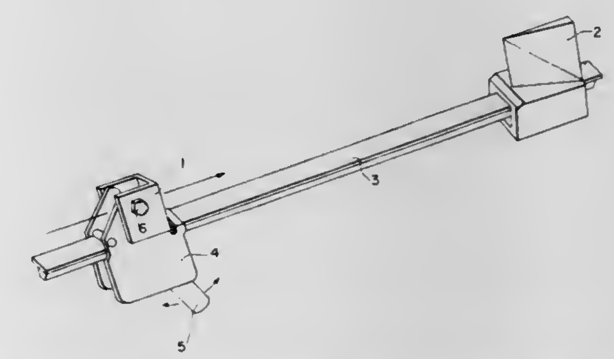

1. A device for splitting logs comprising the following combination:

a. jack means comprising a jack post and jacking mechanism; and
b. a platform block mounted upon said jacking mechanism and attached thereto, said platform block having one face to contact one end of a log to be split; and
c. a wedge block fixedly attached to said jack post having a wedge with apex facing said platform block in which said wedge apex forms an acute angle with said jack post, said acute angle opening toward said platform block, to prevent said log from disengaging at the wedge block during splitting, such that, when said log to be split is inserted with one end thereof contacting said platform block and the other end thereof contacting said apex of said wedge block, and said jack means are actuated forcing said platform block toward said wedge block, said log is split.

4,061,169
APPARATUS FOR CUTTING OFF A THICKNESS OF WOOD OR VENEER FROM LOGS
Katsuji Hasegawa, Nagoya, Japan, assignor to Meinan Machinery Works, Inc., Ohbu, Japan
Filed Aug. 2, 1976, Ser. No. 710,468
Int. Cl.² B27L *5/02*
U.S. Cl. 144—213 **5 Claims**

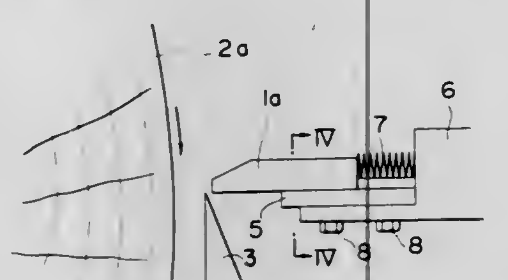

1. In an apparatus for cutting off a thickness of wood or veneer from a wooden loglike member, said apparatus having a tangential knife for cutting the wooden member and a pressing device positioned ahead of the cutting edge of said knife, the improvement wherein said pressing device comprises a plurality of pressing members, resilient means individually urging each of said pressing members into engagement with the surface of said wooden member, each said pressing member comprising a roller, and means associated with each said roller for making small cuts on the surface of the wooden member, said means comprising a plurality of edged members provided on the peripheral surface of each said roller.

4,061,170
GLOVE CONDITIONING CONTAINER
Arnold Marks, Philadelphia, Pa., assignor to Arnold Marks; Judith A. Marks, both of Philadelphia and Harry E. Livingston, Cheltenham, all of, Pa.
Filed June 23, 1976, Ser. No. 699,018
Int. Cl.² B65D *65/02*
U.S. Cl. 150—52 R **11 Claims**

1. A glove conditioning container comprising:
a foldable member;
closure means for securing sides of said foldable member together;
controlled ventilation means disposed to permit a controlled amount of air to reach the area formed within the sides of said foldable member when said member is in its folded position; and

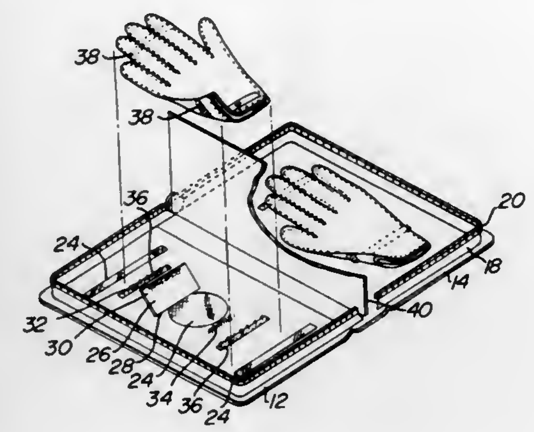

restraining means for a pair of gloves to permit said gloves to be positioned within the confines of said foldable member.

4,061,171
NONREINFORCED TIRE
Jacques Boileau, Clermont-Ferrand, and Albert Mathevet, Chamalieres, both of France, assignors to Compagnie Generale des Etablissements Michelin, France
Filed June 7, 1976, Ser. No. 693,967
Claims priority, application France, June 12, 1975, 75.18481
Int. Cl.² B60C *5/00, 13/00, 15/00*
U.S. Cl. 152—352 R **31 Claims**

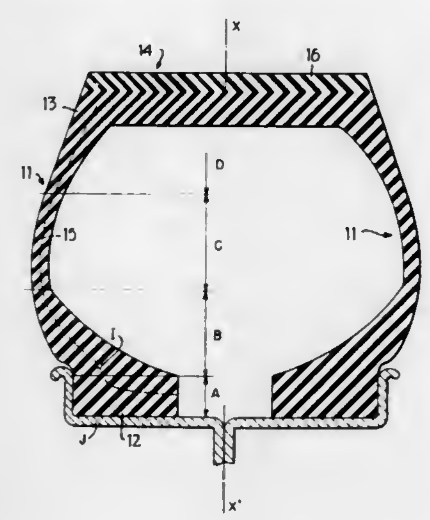

1. In a nonreinforced inflated tire mounted on a wheel rim, said tire consisting of at least one elastic material and having a tread-forming crown extended on both sides by a sidewall terminating in a bead, each sidewall as seen in radial section having an outer wall and an inner wall and a median line which is the line of the centers of circles which are tangent both to said outer wall and to said inner wall, each circle being entirely included within said radial section, the improvement which comprises each sidewall has at least one sequence of zones A, B, C, D without interruption of continuity, formed of a zone C of substantially constant thickness, and, on opposite sides of the zone C, a zone B in which the thickness of the tire increases as it moves away from the zone C, the thickness of this zone B at its end opposite zone C being at least two times the thickness of the zone C, and a terminal zone D in which the thickness of the tire increases as it moves away from the zone C, the ratio of the increase in thickness of the zone D per unit of length of the median line being less than the ratio of increase in thickness of the zone B per unit of length of the median line, and finally a terminal zone A following the zone B and whose maximum thickness is equal to at least the greatest thickness of the zone B, said median line having a reversal of curvature which is located in a zone B.

4,061,172
ASSEMBLY OF PNEUMATIC TIRE AND RIM
Akira Yoshida, Itami; Taketoshi Kubo, Nara; Mashayuki Yamajo, Izumi, and Masahiro Ishigaki, Ibaragi, all of Japan, assignors to The Toyo Rubber Industry Co., Ltd., Osaka, Japan
Continuation of Ser. No. 523,949, Nov. 14, 1974, abandoned. This application Mar. 10, 1976, Ser. No. 665,481
Claims priority, application Japan, Nov. 14, 1973, 48-128059
Int. Cl.² B60C *15/02, 13/00*
U.S. Cl. 152—379.1 **4 Claims**

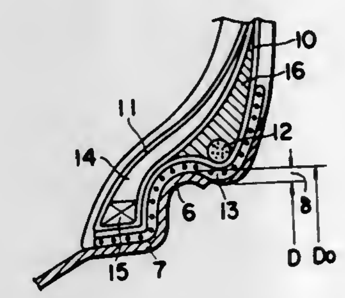

1. In a pneumatic tire and wheel assembly comprising: a tire including a tread and a pair of sidewalls extending radially inwardly therefrom on each side thereof and terminating in bead areas and a wheel rim comprising: an axially directed rim base, bead seats extending axially from said rim base to each side thereof and terminating in radially outwardly directed rim flanges, the improvement wherein said pneumatic tire comprises at least one unitary ring-formed projection axially outside of the wheel rim and adjacent the rim flange and including a first portion projecting radially inwardly of said rim flange such that when the tire has an inner air pressure of 0 and is under no load, the half difference between the minimum diamter of the ring-formed projection at said first portion and the outer diameter of the rim flange ranges from about 2 to 7 mm, said tire ring-formed projection further including a second, rigid portion radially beyond said rim, said second portion comprising a rubber compound having a 100% modulus of elasticity of about 30 to 70 kg/cm², and wherein a reinforcing material extends in a circumferential direction of the tire and lies within said ring-formed projection, second rigid portion, at a position radially and axially outwards of said rim flange.

4,061,173
TIRE SERVICING APPARATUS
Robert V. Daly, West Hollywood, Calif., assignor to The Coats Company, Inc., La Vergne, Tenn.
Filed Dec. 29, 1976, Ser. No. 755,185
Int. Cl.² B60C *25/12*
U.S. Cl. 157—1.17 **6 Claims**

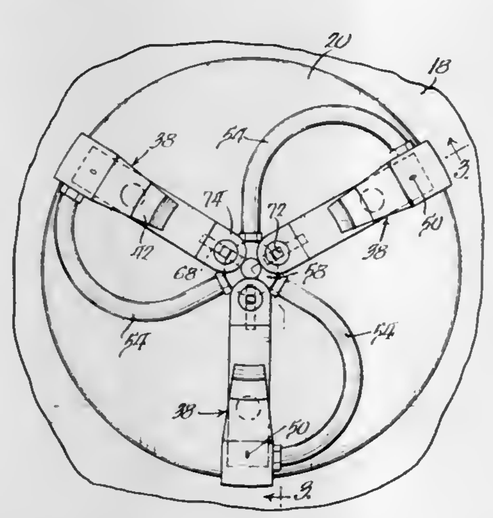

1. In a tire servicing apparatus the combination of:
a base;
a wheel support including clamps movable between wheel rim gripping and non-wheel engaging positions;
a shaft rotatably journalled on said base and mounting said wheel support for rotation on said base;
means for rotating said shaft;
a plurality of nozzles, one for at least some of said clamps, mounted on the associated clamp for movement therewith; and
means, including a conduit in said shaft, for directing air under pressure to said nozzles.

4,061,174
FIXING OF SHAPED BODIES TO METAL CASTING MOULDS
Bryan William Edwards, Birmingham, England, assignor to Foseco International Limited, Birmingham, England
Filed Nov. 1, 1976, Ser. No. 737,792
Claims priority, application United Kingdom, Dec. 5, 1975, 50025/75
Int. Cl.² B22C *9/00;* **B22D** *7/00*
U.S. Cl. 164—6 **11 Claims**

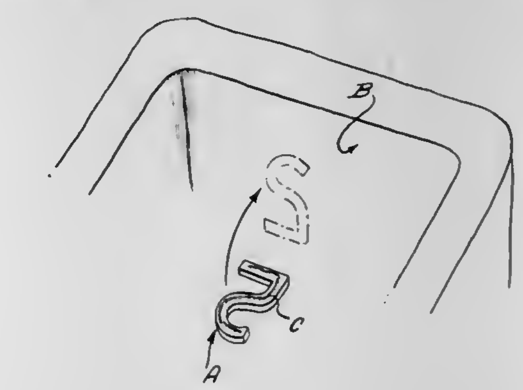

1. A method of fixing a shaped body of a refractory material to an interior face of an ingot mould, which method comprises applying to at least one of said body and said face a mixture consisting essentially of aqueous alkali metal silicate and a particulate refractory material, the mixture having a viscosity of at least 2000 poises measured on a Brookfield Viscometer model RVT at 20° C, and urging together said body and said face.

4,061,175
PATTERN ASSEMBLY AND METHOD OF MAKING THE SAME
Claude H. Watts, Mayfield Heights, Ohio, assignor to Precision Metalsmiths, Inc., Cleveland, Ohio
Filed July 19, 1976, Ser. No. 706,775
Int. Cl.² B22C *7/00*
U.S. Cl. 164—45 **6 Claims**

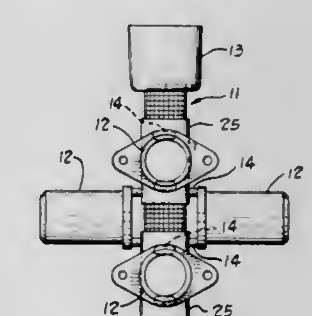

3. A pattern set-up for use in the lost pattern process of investment casting comprising:
a. a sprue member including a tube and a surrounding sleeve made of flexible material, said sprue member being provided with an outer coating of wax,
b. a plurality of preformed, thin bands assembled around said sleeve at spaced locations along its length, and
c. a plurality of workpiece patterns attached to said bands,

d. said bands being made of an expendable pattern material and having a thickness sufficient to prevent flexing of said sleeve.

4,061,176

FLUID-TIGHT COLD-CHAMBER PRESSURE CASTING APPARATUS

Henri Carbonnel, Antony, France, assignor to Groupement pour les Activites Atomiques et Avancees "GAAA" S.A., Le Plessis-Robinson, France

Filed July 26, 1976, Ser. No. 708,449

Claims priority, application France, Aug. 8, 1975, 75.24830

Int. Cl.² B22D *17/14*

U.S. Cl. 164—61 7 Claims

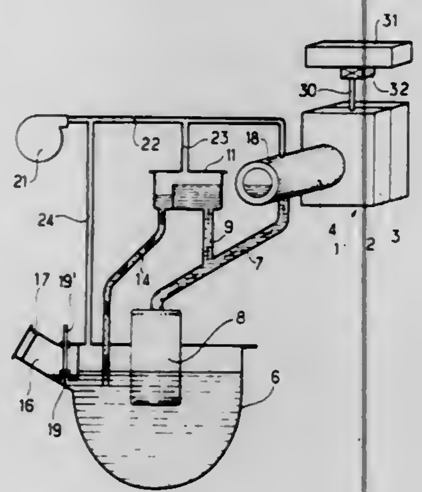

1. In a method for rapid casting of molten metal comprising the step of pumping molten metal through an ascending pipe from a closed crucible containing molten metal by a pump at least partially immersed in said molten metal to an injection cylinder connected to a mold at a level above said crucible, and determining the level of molten metal in the injection cylinder by a level determining tank fluid connected by way of a return pipe to the crucible and to the ascending pipe, the improvement comprising: maintaining a common vacuum pressure above the molten metal within the crucible, the level-determining tank and the injection cylinder during pressure casting until at least the molten metal has cooled in the mold.

4,061,177

APPARATUS AND PROCEDURE FOR THE BELT CASTING OF METAL

Olivo Giuseppe Sivilotti, Kingston, Canada, assignor to Alcan Research and Development Limited, Montreal, Canada

Filed Apr. 15, 1975, Ser. No. 568,312

Int. Cl.² B22D *11/06, 27/16*

U.S. Cl. 164—87 15 Claims

1. An apparatus for the continuous casting of metal in strip form comprising a pair of movable heat-conducting belts defining therebetween a mold space extending over a predetermined distance from an extrance end of said mold space where liquid metal enters to an exit end where the metal traveling with the belts has become cast strip, means for guiding the belts along predetermined paths through said distance, said guiding means for at least one of the belts comprising at least several sections of guiding structure disposed in succession to each other along said distance and having belt-facing areas thereby collectively covering the reverse surface of said one belt adjacent to the mold space, at least a plurality of said sections having mounting means adjustably settable to locate the section individually over a range of positions toward and away from the guiding means for the other belt, said adjustably settable means comprising means separately settable at least for the two ends of each section in the direction of belt travel, whereby each of said plurality of sections can be set to guide the adjacent belt along a path of selected position, and of selected direction in a range from parallelism through various degrees of taper, relative to the other belt, each of said several sections consisting of belt cooling and supporting means for a predetermined area of said reverse surface of said one belt, including a multiplicity of guiding elements distributed over said area crosswise and lengthwise of the belt path and constituted in a multiplicity of crosswise rows each containing a

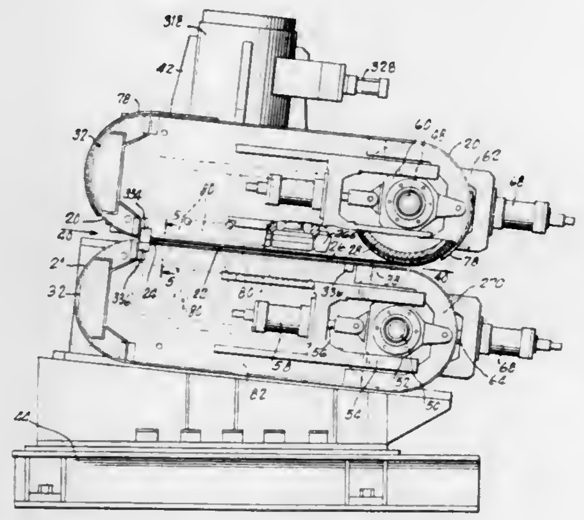

multiplicity of said elements, said elements of each of said several sections being disposed to lie collectively in a predetermined surface facing said reverse belt surface, and said elements of at least the last one of said sections in the direction of belt travel having mounting means whereby each element is individually displaceable in a direction away from the mold space, said section being constructed and arranged so that each element is releasably held in position in said predetermined surface and said mounting means comprising means yieldable to permit displacement of each element individually away from the mold space in response to force exerted by the belt.

11. A method of continuous casting of metal in strip form between heat-conducting belts defining therebetween a mold space over a predetermined distance while metal is introduced as liquid at an entrance end of said distance and discharged as cast strip at the other, exit end of said distance and while cooling the reverse surfaces of the belts and providing a multiplicity of supports for each belt distributed throughout said distance and arranged to define a path for the belt, the procedure comprising, for at least one of the belts:

a. cooling the belt by maintaining a thin layer of rapidly flowing liquid coolant over the reverse surface of the belt as a bearing layer between said reverse surface and said supports;

b. exerting force on said one belt independent of metal in the mold space to urge the belt firmly against the bearing layer and through it against the supports, along a first zone extending from the entrance to not further than an intermediate point of said distance, being a zone where the metal is still essentially fluid;

c. exerting little or no force independent of metal in the mold space on the belt toward the supports, through a second zone of said distance, where there are coherent shells of solidified metal adjacent to the belts, extending from the first zone toward the exit at least to a point where the metal behaves essentially as a solid, so that the bearing layer of flowing liquid coolant affords soft compliance, by compression of said layer between the belt and the supports; and

d. yieldably loading each support individually toward the mold space, while controlling said loading for yield of each support locally upon exertion of outward force by the belt substantially greater than the outward force on the belt at the first zone, through a third zone of said distance, including a terminal zone where the metal behaves essentially as a solid, extending to the exit from said second zone or from an earlier point in said distance.

4,061,178

CONTINUOUS CASTING OF METAL STRIP BETWEEN MOVING BELTS

Olivo Giuseppe Sivilotti; David Edward Steer, and Thomas Adrian Cheetham Stock, all of Kingston, Canada, assignors to Alcan Research and Development Limited, Montreal, Canada

Filed Apr. 15, 1975, Ser. No. 568,320

Int. Cl.² B22D *11/06, 27/16*

U.S. Cl. 164—87 25 Claims

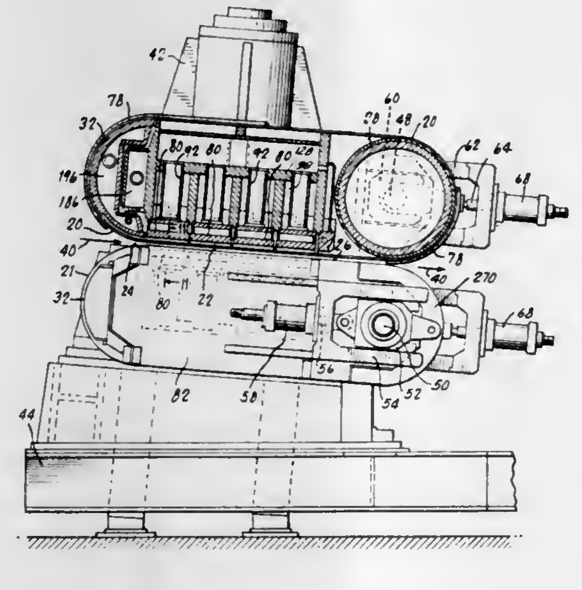

1. An apparatus for the continuous casting of metal in strip form comprising a pair of movable heat-conducting belts, defining therebetween a mold space, said apparatus including, at each of the opposite sides of said mold space, means for guiding the adjacent belt along a desired path, each said means having a multiplicity of closely spaced belt-guiding faces distributed over a predetermined area of the belt path and lying in a desired surface adjacent to the reverse face of the belt for defining the said path, each guiding face having a central jet aperture for directing liquid coolant against the belt, cooling means comprising means for supply of liquid coolant under pressure to the jet apertures and for withdrawal of liquid coolant from the belt, said apparatus being constructed and arranged so that each belt can be urged outwardly of the mold space into substantial conformity with said desired surface, and said guiding and cooling means being constructed and arranged so that liquid coolant flows outward from each jet of the faces along the belt, forming a liquid coolant layer spacing the belt from said faces in said conformity therewith.

22. In a method of continuous casting of metal in strip form between movable heat-conducting belts defining therebetween a mold space along which the belts travel, while metal is introduced as liquid at one end of said space and discharged as cast strip at the other, exit end, the procedure of guiding and cooling the belts along said space comprising: providing at the reverse surface of at least one belt a multiplicity of supports which are distributed over an area to be guided and cooled, and having guiding faces collectively lying in a surface to define a path for the belt, projecting liquid coolant under pressure through apertures in said faces against said reverse surface of the belt while withdrawing said coolant at a multiplicity of localities respectively closely adjacent to the faces, said projecting and withdrawal of coolant being controlled to provide liquid rapidly flowing on the reverse surface of the belt, across each entire guiding face from the aperture thereof to said directly adjacent localities, for maintaining a layer of liquid coolant in rapid flow over substantially the entirety of said area of the belt reverse suface, between said surface and the guiding faces.

4,061,179

APPARATUS FOR POURING CASTING MATERIAL

Horst Gillhaus, Dortmund-Loh, Germany, assignor to BBC Brown, Boveri & Company Limited, Baden, Switzerland

Filed Sept. 13, 1976, Ser. No. 722,526

Claims priority, application Germany, Sept. 27, 1975, 2543168

Int. Cl.² B22D *41/12*

U.S. Cl. 164—151 8 Claims

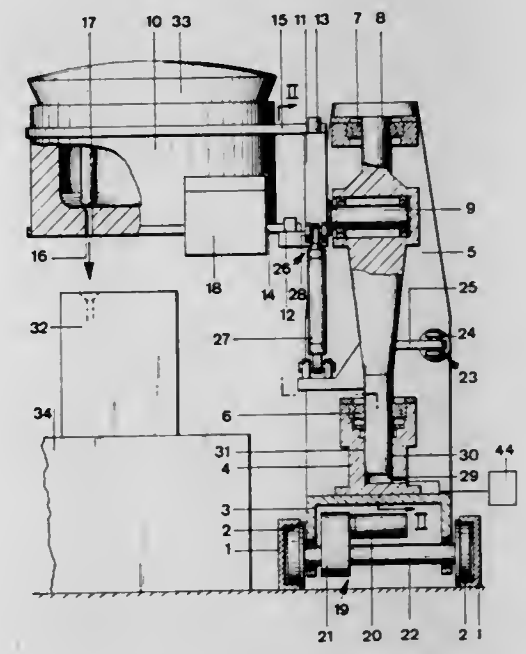

1. Casting apparatus for delivering casting material to mold means arranged upon a casting line comprising transport means for moving said apparatus along a path extending generally parallel to said casting line, ladle means adapted to have said casting material stored therein for delivery to said mold means, a vertical column mounted for rotation about a vertical axis, a cantilever mounted at one end thereof on said vertical column for rotation about horizontal axis and having a free end at the opposite end thereof, fork means on said free end of said cantilever, and outrigger means on said ladle adapted to engage said fork means for mounting said ladle upon said fork means, said vertical column being arranged to extend vertically upwardly from said transport means, said apparatus further including pressure sensitive weighing means arranged to extend to between the lower part of said column and said transport means.

4,061,180

INSTALLATION FOR ELECTROSLAG MELTING OF HEAVY-WEIGHT METAL INGOTS

Boris Evgenievich Paton, ulitsa Kotsjubinskogo, 9, kv. 21; Boris Izrailevich Medovar, bulvar Lesi Ukrainki, 2, kv. 8; Vitaly Mikhailovich Baglai, ulitsa Semashko, 10, kv. 54/3; Jury Vadimovich Latash, ulitsa Artema, 55, kv. 23; July Georgievich Emelyanenko, ulitsa Darvina, 5, kv. 5; Leonid Mikhailovich Stupak, Brest-Litovskoe shosse, 39, kv. 9; Jury Fedorovich Alferov, bulvar Lepse, 29, kv. 64; Oleg Petrovich Bondarenko, ulitsa Kreschatik, 15, kv. 34; Grigory Bentsionovich Schupak, ulitsa Chudnovskogo, 7, kv. 61; Lev Andreevich Shuruev, ulitsa Gagarina, 10/2, kv. 7, all of Kiev; Kim Moiseevich Khasin, ulitsa K. Marxa, 35, kv. 17, Novosibirsk; Jury Fedorovich Frolov, ulitsa K. Marxa, 8/2, kv. 70, Novosibirsk; Valery Vasilievich Salmin, ulitsa Zorge, 95, kv. 69, Novosibirsk; Vladimir Ivanovich Lugovsky, ulitsa Pamirskaya, 48, kv. 70, Novosibirsk; Vilen Fedorovich Marjuschenko, ulitsa Televizionnaya, 11, kv. 7, Novosibirsk; Fedor Fedorovich Shaburov, ulitsa Rimskogo-Korsakova, 4, kv. 64, Novosibirsk, all of U.S.S.R.; Jury Andreevich Schelkunov, deceased, late of Novosibirsk, U.S.S.R., by Margarita Petrovna Schelkunova, administratrix, ulitsa Akademika Komarova, 19a, kv. 87, Moscow, U.S.S.R.

Filed June 23, 1976, Ser. No. 699,172
Int. Cl.² B22D *23/06*
U.S. Cl. 164—252 3 Claims

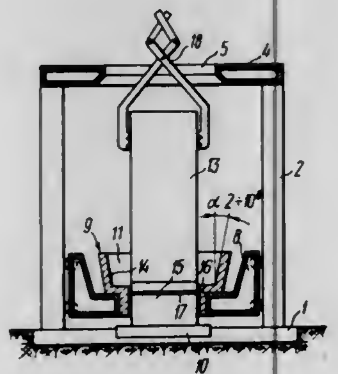

1. An installation for electroslag melting of heavy-weight metal ingots by melting consumable electrodes comprising: vertical columns; at least one electrode holder secured on the vertical columns and adapted to fix therein one or several consumable electrodes and to feed electric current to them; a cooled mould positioned below the electrode holder and mounted for possible vertical displacement along the vertical columns and having a through cavity whose clear cross section in a slag bath zone is larger than a clear cross section in an ingot forming zone and, the latter cross section is substantially close in value to the cross-section area of one or several of the consumable electrodes being simultaneously melted; a cooled bottom plate having a vertical cooled protrusion, the cooled protrusion partially entering the cavity of the cooled mould from underneath and forming the bottom of the cooled mould at the beginning of melting, and being of a height exceeding a height of the ingot forming walls of the cooled mould and of a cross section allowing the cooled mould to be lowered to such a level at which the ingot forming section of the wall of the cooled mould is below the upper end face of the cooled protrusion; and a drive for displacing the cooled mould in vertical direction.

4,061,181

APPARATUS FOR CENTRIFUGAL CASTING IN SPLIT MOLDS

Jan Ficek, Zabrze, Poland, assignor to Przedsiebiorstwo Projektowania i Wyposazania Zakladow Przemyslu Maszyn i Aparatow Ekejtrtczbteg "Promel", Gliwice, Poland

Filed Feb. 7, 1977, Ser. No. 766,496
Claims priority, application Poland, Feb. 11, 1976, 187182
Int. Cl.² B22D *13/10*
U.S. Cl. 164—292 6 Claims

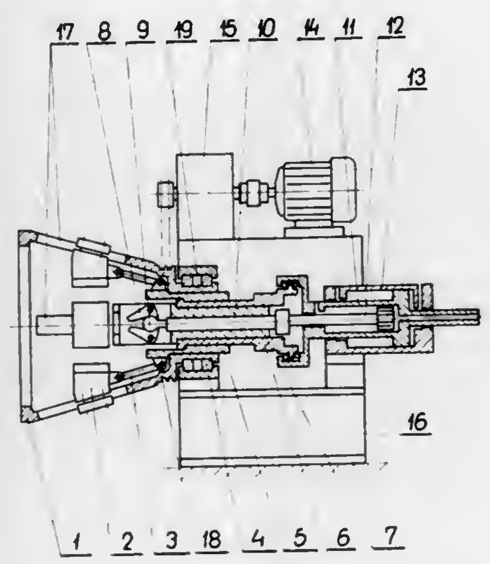

1. Apparatus for centrifugal casting in split molds comprising:
a. a rotatable head having the configuration of a hollow frustum of a cone, said head being provided with a plurality of elongated slots extending along the generatrices thereof;
b. a plurality of mold sections which cooperate to define a mold for centrifugal casting, each of said sections being mounted in one of said slots for sliding movement therealong from a first position in which said sections cooperate to define said mold to a second position in which said sections are separated from one another so as to expose a casting formed in said mold;
c. gripping means for gripping the casting when said mold sections are in said second position and for withdrawing the casting from said head, said gripping means being mounted for axial movement interiorly of said head;
d. activating means for displacing said mold sections and said gripping means and for causing the latter to grip the casting; and
e. drive means for rotating said head when said mold sections are in said first position to permit centrifugal casting with said head.

4,061,182

LOW-PRESSURE CASTING APPARATUS

Adolf Diez, Bad Friedrichshall II, Germany, assignor to Karl Schmidt GmbH, Neckarsulm, Germany

Continuation of Ser. No. 559,474, March 18, 1975, abandoned. This application July 30, 1976, Ser. No. 709,997
Claims priority, application Germany, Apr. 8, 1974, 2417102
Int. Cl.² B22D *17/02, 17/26*
U.S. Cl. 164—309 1 Claim

1. In low-pressure casting apparatus which comprises
holding furnace means for a molten metal bath, said furnace means having cover means and sidewalls and being adapted to be closed gas tight and supplied with gas under pressure;
ingot mold means positioned on top of said furnace means and including base plate means carried by the cover means of said furnace means and core cover plate means having attached to the underside thereof core means;
riser pipe means adapted to be immersed in said metal bath and communicating with the base plate means of the ingot mold means;
a plurality of upright tension rods adapted to vertically move the core cover plate means of said ingot mold;
two opposite, upright flat members positioned to the rear of the sidewalls of said furnace means;
horizontal bridge means mounted between said upright flat members;
said bridge means having a U-shaped slot in which is horizontally slidably mounted tension means, and said bridge

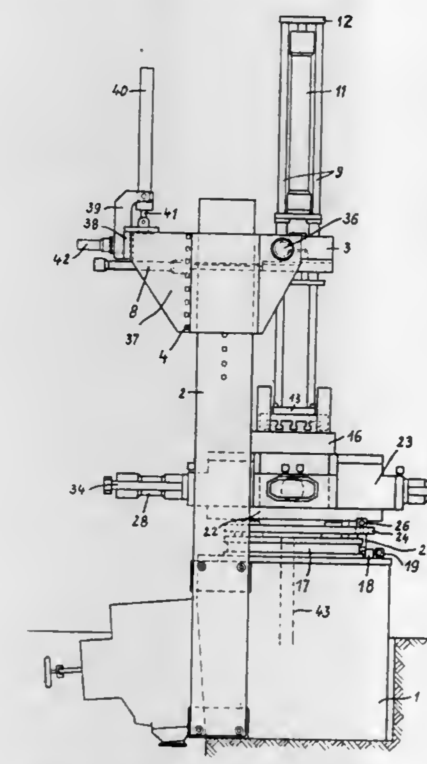

means having means to horizontally move said tension means;
the improvement which comprises bracket means vertically adjustably mounted on said upright flat members, horizontal pivot pin means mounted on the forward portions of the bracket means, the bridge means being pivotally mounted on the pivot pin means for pivotal movement thereabout, a cross-beam connecting the bracket means and carrying a bearing bracket, a hydraulic actuator for the pivoting movement and pivoted in said bearing bracket, and means on said cross-beam for locking said bridge means in operative position.

4,061,183

REGENERATOR MATRIX

Leonard C. Davis, Indianapolis, Ind., assignor to General Motors Corporation, Detroit, Mich.

Filed Feb. 16, 1977, Ser. No. 769,228
Int. Cl.² F28D *19/00*
U.S. Cl. 165—8 3 Claims

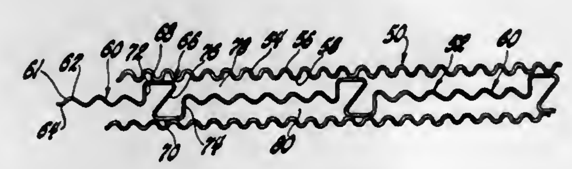

1. A sheet matrix for a gas turbine engine regenerator disc comprising first and second sheets spirally wound to form a disc, said first sheet having first corrugations formed transversely thereacross with a predetermined pitch dimension, said second sheet having corrugated segments formed transversely thereof at spaced axial points of said second sheet, said second sheet having spacers with parallel segments engageable with the peaks of said first corrugations on adjacent spirally wound portions of said first sheet, each of said parallel segments having a length greater than that of the pitch dimension of said first corrugations to prevent nesting of adjacent wraps of the spirally wound first and second sheets, each of said spacers further including a transversely formed portion defining a first side wall of a flow passage through said first and second sheets, each of said spacers including a second side wall on the opposite side of said passage from said first side wall.

4,061,184

HEAT EXCHANGER FOR A REFRIGERATED WATER COOLER

Richard J. Radcliffe, Gahanna, Ohio, assignor to EBCO Manufacturing Company, Columbus, Ohio

Filed Oct. 28, 1976, Ser. No. 736,506
Int. Cl.² F28D *7/10*
U.S. Cl. 165—38 6 Claims

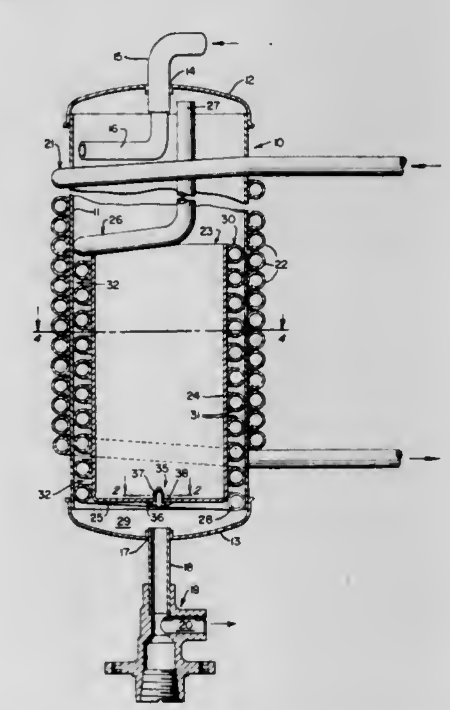

1. Apparatus for exchanging heat between two fluid mediums comprising:
a. a hollow metallic tank having a generally cylindrical outer side wall and opposite end wails, one of the end walls of said tank having an inlet through which a first fluid medium may be introduced into said tank, the other of said end walls having an outlet through which said first fluid medium may be discharged from said tank;
b. a baffle positioned within said tank and having an elongated generally cylindrical side wall disposed in inwardly spaced concentric relation to the side wall of said tank, and arranged normally to direct said first fluid medium toward the side wall of said tank during passage thereof through said tank;
c. a first tubular conduit positioned within said tank and having an inlet portion opening toward the inlet end of said tank, an outlet portion opening toward the outlet end of said tank, and an intermediate helical portion disposed between and in pressure-fitted heat exchange contact with each of the side walls of said baffle and said tank, said first conduit defining within itself a first passage for conducting a portion of said first fluid medium from the inlet to the outlet of said tank, the intermediate helical portion of said conduit having relatively spaced apart convolutions defining with the side walls of said baffle and said tank a second, relatively separated, spiral passage for conducting another portion of said first fluid medium from the inlet to the outlet of said tank; and
d. a second tubular conduit helically wound about and disposed in heat exchange contact with the outer surface of the side wall of said tank for conducting a second fluid medium in heat exchange relation to the outer side wall of said tank.

4,061,185
TEMPERATURE CONTROL SYSTEM
John Falczak, Toronto, Canada, assignor to Canada Square Management Ltd., Toronto, Canada
Division of Ser. No. 579,342, May 21, 1975, Pat. No. 3,998,267. This application Mar. 4, 1976, Ser. No. 663,584
Claims priority, application Canada, May 16, 1975, 227215
Int. Cl.² F25B *29/00;* F16L *5/00*
U.S. Cl. 165—48 **9 Claims**

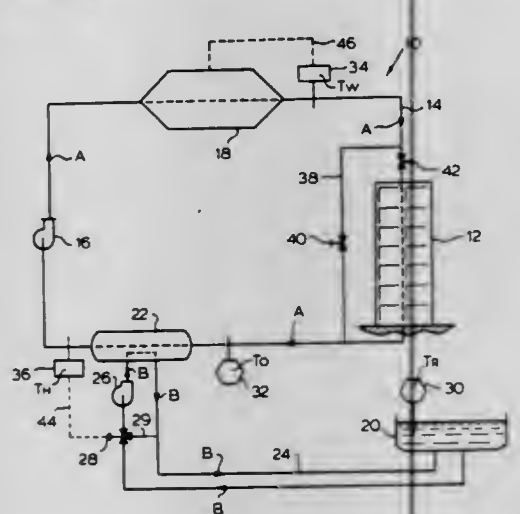

1. Apparatus for controlling the temperature in a building having a temperature control circuit containing a building heat transfer load, heat energy storage means, and a circulating temperature control fluid for transferring heat energy between the fluid and the building load, the apparatus comprising:

a. means for measuring the amount of heat energy in the fluid and for determining the existing available energy to be transferred between the fluid and the building load;
b. means for predicting the amount of heat energy required to be transferred between the fluid and the building load over a predetermined interval;
c. an energy transfer unit located in the control circuit between the storage means and the building load, said transfer unit being adapted to vary the heat energy in the fluid;
d. means coupled to said transfer unit for controlling the output of said transfer unit, so that if said existing available energy to be transferred is less than said energy required to be transferred, the transfer unit varies the heat energy of the fluid in the control circuit at a rate of variation such that the total available energy to be transferred is at least equal to said energy required to be transferred over said predetermined interval; and
e. means located in the control circuit for controlling the circulation of fluid so that said existing available energy to be transferred is dissipated at a rate proportional to the difference between the rate of transfer of energy between the fluid and the building load, and said rate of variation by the transfer unit.

4,061,186
COMBINED COOLING AND HEAT RECOVERY SYSTEM
Ake Ljung, Soderkoping, Sweden, assignor to AB Svenska Flaktfabriken, Stockholm, Sweden
Filed Mar. 10, 1976, Ser. No. 665,545
Claims priority, application Sweden, Mar. 21, 1975, 75033142
Int. Cl.² F24F *7/00;* F24J *3/04;* F28D *15/00;* F28F *27/02*
U.S. Cl. 165—59 **5 Claims**

1. A system for cooling and heating ventilation air flowing through supply-air ducts and spent-air ducts comprising a heat exchanger in each of said ducts, fluid circuit means interconnecting said heat exchangers, said fluid circuit means including a refrigerating machine having an evaporator component connected to one of the heat exchangers and a condenser component connected to the other heat exchanger, said components operable respectively, when said machine is operating, to cool and to heat the fluid passing therethrough, and valve means connected to each component to alternatively direct the fluid from said component either back through the associated heat exchanger or to the other heat exchanger, whereby when said valve means is in the first position heat is transferred from the supplied air to the evaporator by said one heat exchanger, and

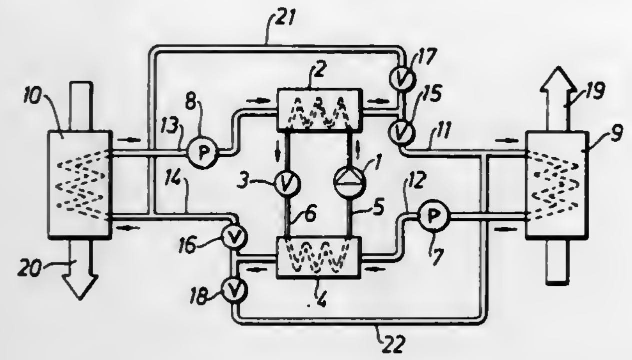

is transferred from said condenser to spent air by said other heat exchanger, and when said valve means is in the second position heat is transferred between the supplied air and the spent air by the heat exchangers and said fluid circuit.

4,061,187
DUAL COOLING SYSTEM
Ramanujam Rajasekaran; Dennis O. Taylor, and James W. Whittlesey, all of Columbus, Ind., assignors to Cummins Engine Company, Inc., Columbus, Ind.
Filed Apr. 29, 1976, Ser. No. 681,492
Int. Cl.² F28D *15/00;* F01P *3/12*
U.S. Cl. 165—107 **7 Claims**

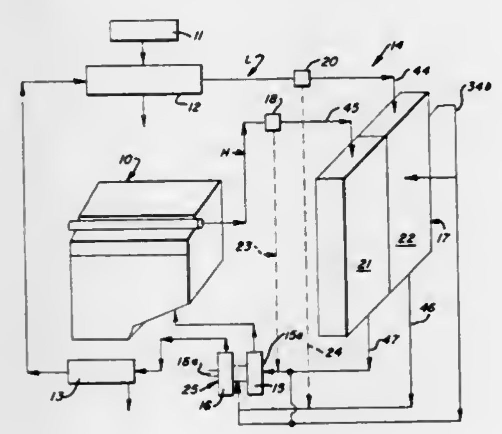

1. A dual cooling system for circulating coolant along discrete paths while maintaining the coolant in said paths at predetermined temperature and pressure differentials, said system comprising segregated circuits for the coolant; coolant circulating pump means including a housing defining a pump chamber in each circuit, a rotatable partition means encompassed along its annular periphery by a segment of said housing extending axially of the axis of rotation of said partition means at a greater radial distance from the said axis that the annular periphery of said rotatable partition means, said rotatable partition means being in at least partial registration with said housing segment and cooperating therewith to form a common partition intermediate said chambers, said common partition having a restrictive passage defined between the annular periphery of said rotatable partition means and the encompassing housing segment for limited coolant migration between said chambers in a direction substantially parallel to the axis of rotation of said partition means, impeller means extending into said chambers from opposite surfaces of said partition means to effect coolant circulation within said circuits at the predetermined temperature and pressure differentials when said partition means is rotated; means to effect rotation of said partition means; heat exchanger means disposed within each circuit; and coolant make-up means common to said circuits and connected to a suction side of each pump chamber to replenish any coolant migrating between said chambers, whereby said rotatable partition means is adapted to be positioned within said housing alone a predetermined axis of rotation, and the restrictive passage between said rotatable partition means and said housing segment separating said coolant circuits while permitting rotation of said rotatable partition means within said pump housing.

4,061,188
FAN SHROUD STRUCTURE
Harold D. Beck, Downers Grove, Ill., assignor to International Harvester Company, Chicago, Ill.
Continuation of Ser. No. 543,714, Jan. 24, 1975, abandoned, which is a continuation of Ser. No. 470,787, May 17, 1974, abandoned. This application Mar. 19, 1976, Ser. No. 668,355
Int. Cl.² F28F *13/06;* F01P *7/10;* F03D *11/00*
U.S. Cl. 165—122 **16 Claims**

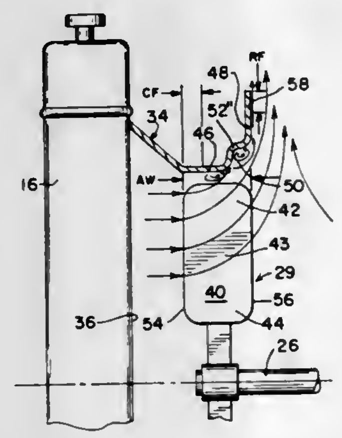

1. A fan shroud structure for use with a rotary, axial flow fan having a plurality of circumferentially spaced, radially extending impeller blades, said blades having an effective axial width (AW) measured axially along the rotational axis of the fan between a first plane and a second plane, said planes being axially spaced and parallel with respect to each other and disposed substantially normal to the rotational axis of the fan, said first and second planes extending radially, respectively through points on the leading edges of the blades at the radial tip portions thereof and through points on the trailing edges of the blades at the radial tip portions thereof, the combination including said fan, comprising,

a generally cylindrical axially extending throat section encircling the fan;
an annular generally radially extending flat portion, said flat portion being radially spaced outwardly and axially from one axial end of said throat section;
an annular intermediate section extending between said one axial end of said throat section and said radial flat portion, said throat section, intermediate section, and said radial flat portion being effective to produce a low pressure region between the air stream flowing over the surface thereof and such surface when the fan is in operation; and
an annular supplementary low pressure vortex creating means formed in said throat section, intermediate section and radial flat portion of the fan shroud structure whereby an additional low pressure region is generated between the air stream flowing over the surface of the fan shroud structure and such fan shroud structure surface when the fan is in operation.

9. A fan shroud structure for use with a rotary, axial flow fan having a plurality of circumferentially spaced, radially extending impeller blades, said blades having an effective axial width (AW) measured axially along the rotational axis of the fan between a first plane and a second plane, said planes being axially spaced and parallel with respect to each other and disposed substantially normal to the rotational axis of the fan, said first and second planes extending radially, respectively, through points on the leading edges of the blades at the radial tip portions thereof and through points on the trailing edges of the blades at the radial tip portions thereof, comprising,

a generally cylindrical axially extending throat section encircling the fan;
an annular, generally radially extending flat portion, said flat portion being radially spaced outwardly and axially from one axial end of said throat section;
an annular, radially and axially curved, intermediate section extending between said one end of said throat section and said radial flat portion, said throat section, intermediate section, and said radial flat portion being effective to produce a low pressure region between the air stream flowing over the surface thereof and such surface when the fan is in operation, and the following relationships exist: RF = AW/3 plus or minus 12 percent of AW, CF = AW/3 plus or minus 12 percent of AW, and R = 2AW/3 plus or minus 12 percent of AW where RF is the radial length of the radial flat portion, CF is the axial length of the cylindrical throat section, and R is the radius of curvature of the intermediate section; and
an annular supplementary low pressure vortex creating means formed in said throat and intermediate section, and radial flat portion of the fan shroud structure such that an additional low pressure region is generated between the air stream flowing over the surface of the fan shroud structure and such fan shroud structure surface when the fan is in operation.

4,061,189
VORTICAL FLOWAEROTHERMODYNAMIC HEAT EXCHANGER
Alexander J. Moncrieff-Yeates, 8609 Hillside Place, Fairfax, Va. 22030
Division of Ser. No. 570,798, April 23, 1975. This application Sept. 29, 1976, Ser. No. 727,703
Int. Cl.² F28F *3/12*
U.S. Cl. 165—168 **22 Claims**

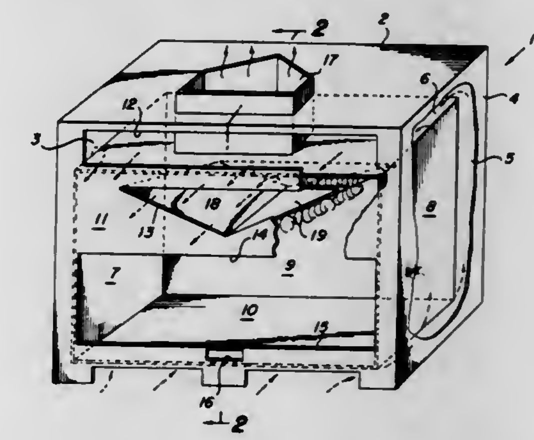

1. Means for exchanging heat between a thermally donative gas and heat exchange surfaces, said means including a donative gas flow path defined at least in part by said heat exchange surfaces and further including:

a source of heat donative gas, means including an exhaust passage for inducing flow of said donative gas through said flow path generally toward said exhaust passage, means for initially diverting at least a portion of the total volume of said donative gas flow to a vortex pattern area, structural means only partially defining said vortex area, said structural means comprising additional flow diverting elements comprising at least part of said heat exchange surfaces effective to remove heat and thus increase the density of said gas proximate to said last mentioned surfaces of said flow diverting elements and thus establish a density gradient across said diverted gas stream to a low pressure area spaced from said diverting elements, said flow diverting elements further effective with said pressure gradient to direct said portion of said gas in a reentrant flow direction away from the confinement of said structural means in an open flow toward said flow path, said gas in said reentrant flow direction being pulled toward said initially diverted gas flow and being further diverted by the induced gas flow to complete a circumferential flow pattern around a low pressure central axis, said

pattern being free to expand and contract in said open flow path in accordance with the velocity thereof, and means establishing communication with said exhaust passage for drawing gas axially from said vortex pattern area to maintain a stable vortical flow within said area and in proximity to said heat exchange surfaces, whereby the path of said donative gas and the time of residency of said donative gas in proximity to said surfaces are prolonged throughout varying temperature and velocity conditions thereby to enhance heat exchange therewith.

4,061,190
IN-SITU LASER RETORTING OF OIL SHALE
Harvey S. Bloomfield, Bay Village, Ohio, assignor to The United States of America as represented by the United States National Aeronautics and Space Administration, Washington, D.C.
Filed Jan. 28, 1977, Ser. No. 763,753
Int. Cl.^{2} E21B *43/24*
U.S. Cl. 166—259 **8 Claims**

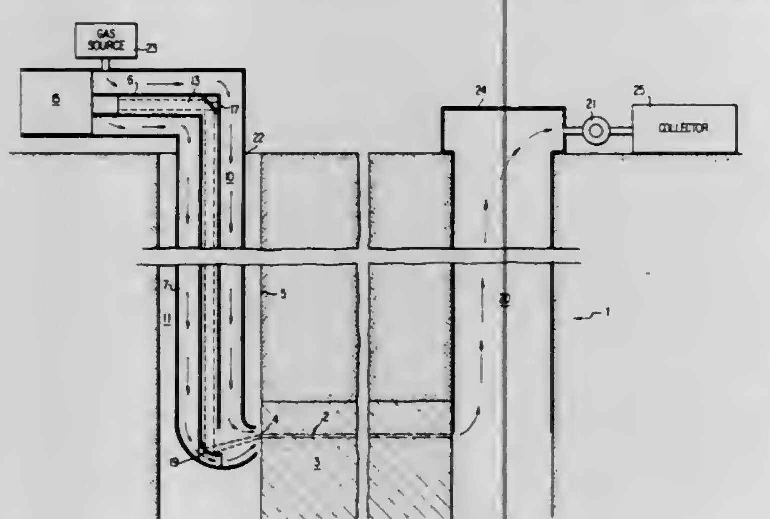

1. A method for the in-situ retorting of oil shale and recovery of gaseous hydrocarbon products, which comprises:
drilling at least two wellbores into an oil shale formation underneath the surface of the ground;
fracturing a region of said oil shale formation by directing a high energy laser beam into one of said wells and focussing said laser beam onto said region of said oil shale formation from a laser optical system;
forcing a compressed gas into said well through which said laser beam was directed to the site of said fracture which supports combustion in the flame front ignited by said laser beam in the fractured region of said oil shale, thereby retorting said oil shale; and
recovering gaseous hydrocarbon products which permeate through said fractured oil shale into the bore of a well adjacent the well through which said laser beam is directed.

4,061,191
METHOD FOR GASEOUS SAND CONSOLIDATION TREATMENT OF WEAK GAS SANDS
Franciscus H. Meijs, and David R. Davies, both of Rijswijk, Netherlands, assignors to Shell Oil Company, Houston, Tex.
Filed June 18, 1976, Ser. No. 697,491
Claims priority, application United Kingdom, Mar. 12, 1976, 9995/76
Int. Cl.^{2} E21B *43/00, 43/02*
U.S. Cl. 166—292 **10 Claims**

1. A process for increasing the rock strength of a water-wet gas-producing reservoir which is susceptible to impairment by liquid blocking and is or is likely to become unconsolidated, comprising:
adjusting the water content of the reservoir to the extent necessary to provide a significant but small proportion of water on the rock surfaces;
mixing a vapor of a silicon polyhalide having a water reactivity substantially equivalent to that of silicon tetrachloride with a substantially inert gas; and
injecting the mixture into the reservoir to convert a significant proportion of the rock-wetting water to a rock strengthening silica gel in the region around the well without unduly reducing the effective permeability of the reservoir.

4,061,192
FIRE EXTINGUISHING AGENT DISTRIBUTING DEVICE
John M. Cholin, 143 Polifly Road, Hackensack, N.J. 07601, and Rodger R. Cholin, Old Stone Hill Road, Pound Ridge, N.Y. 10576
Filed Mar. 29, 1976, Ser. No. 671,575
Int. Cl.^{2} A62C *35/00*
U.S. Cl. 169—16 **5 Claims**

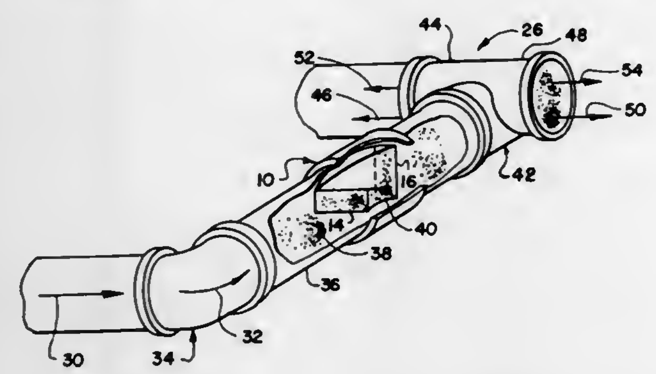

1. A fire extinguishing agent steering device for high speed fluidic fire extinguishing systems for extinguishing a fire hazard comprised of a change of flow means, a conduit upstream of said change of flow means having a twisted channel for reorienting the flow of fire extinguishing agent and expellant gas to assure equal division of the flow into said change of flow means thereby provide homogeneous fire extinguishing agent distribution at the fire hazard, said conduit having said channel with an oblonged cross-sectional exit end, having its major axis angularly rotated from the major axis of the entrance end; and, an oblonged cross-sectional central section interposing the entrance end and the exit end with its major gradually increasing angularly from the major axis of the entrance end and the major axis of the exit end, the major axis of the central section coinciding with each of the major axes of the entrance end and the exit end at their respective locations.

4,061,193
METHOD AND APPARATUS FOR DIGESTING CELLULOSE MATERIAL WITHOUT SCREENING DIGESTING LIQUID WITHDRAWN THROUGH THE DIGESTER TOP
Oliver A. Laakso, and Michael I. Sherman, both of Glens Falls, N.Y., assignors to Kamyr, Inc., Glens Falls, N.Y.
Continuation-in-part of Ser. No. 613,554, Sept. 15, 1975, abandoned. This application Feb. 20, 1976, Ser. No. 659,638
Int. Cl.^{2} D21C *3/24, 7/14, 1/00*
U.S. Cl. 162—19 **7 Claims**

1. Apparatus for continuous digestion of cellulose material chips comprising
a cylindrical vertically disposed impregnation vessel having a first given diameter, an inlet at the top thereof, and an outlet at the bottom thereof,
means for introducing cellulose material chips and digesting liquid at relatively low temperature into said impregnation vessel inlet,
a cylindrical vertically disposed liquid-filled digesting vessel having a second given diameter, greater than said first given diameter, a top, and having a digesting zone and other treatment zones therein, the area of said impregnation vessel outlet being approximately $\frac{1}{4}$–$\frac{1}{3}$ as great as the area of said digesting vessel,

said impregnation vessel extending through the top of said digesting vessel, concentric therewith, a predetermined distance so that said impregnation vessel outlet is disposed a significant distance below the top of said digesting vessel, a chips column formed in said digesting vessel below the outlet from said impregnation vessel by chips entering said digesting vessel from said impregnation vessel outlet,
a liquid outlet formed in the top of said digesting vessel, a substantial distance above said impregnation vessel outlet and above said chips column,
means for introducing digesting liquid at relatively high temperature into said cellulose material chips column at a point a distance J below said impregnation vessel outlet great enough so that even distribution of liquid through said chips column results and so that short-circuiting of liquid to said liquid outlet formed in the top of said digesting vessel is prevented, said distance J being equal to or greater than $\frac{1}{2}$ said second given diameter, the quantity of liquid introduced into said digesting vessel and the first and second diameters being so dimensioned that the velocity of liquid flowing through said chips column to said digesting vessel outlet is substantially less than the velocity of liquid that entrains a significant amount of cellulose material, so that substantially no cellulose particles pass upwardly from said chips column to said liquid outlet,

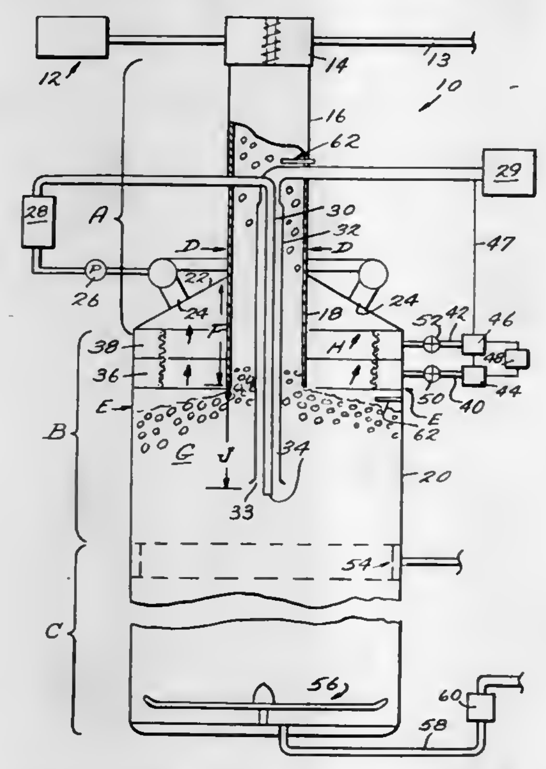

means for withdrawing treated cellulose material from the bottom of said digesting vessel at a given rate so that the chips column is maintained at substantially the same level while individual particles thereof move downwardly through said vessel, and
means for removing any particles entrained in liquid passing from said chips column to said digesting vessel top outlet from said liquid, said means comprising a pair of vertically arranged screens, one atop the other, disposed on generally vertical side walls of said digesting vessel above said chips column and below said liquid outlet, and means for alternately applying suction to one of said screens and not the other to withdraw liquid from said digesting zone while particles are screened out.

5. A method for continuously digesting cellulose material in a vertical digester having an impregnation zone defined by an impregnation vessel having a first diameter, and a digesting zone and subsequent treatment zones defined by a digesting vessel having a second diameter substantially larger than said first diameter, said impregnation vessel extending downwardly into said digesting vessel a significant distance, and an outlet being disposed in the top of said digesting vessel above the outlet of said impregnation vessel into said digesting vessel, and the area of said impregnation vessel outlet being approximately $\frac{1}{4}$–$\frac{1}{3}$ as great as the area of said digesting vessel, said method comprising the steps of
introducing cellulose material and digesting liquid at relatively low temperature into said impregnation vessel at the top thereof, said material and liquid passing downwardly through said impregnation vessel toward said digesting vessel.
introducing chips-liquid mixture from said impregnation vessel into said digesting vessel through said impregnation vessel outlet so that the chips form a chips column in said digesting vessel, the highest point of which is at said impregnation vessel outlet,
introducing digesting liquid at a relatively high temperature into contact with chips at a point a distance J below said impregnation vessel outlet great enough so that even distribution of liquid through said chips column results and so that short-circuiting of liquid to said liquid outlet formed in the top of said digesting vessel is prevented, said distance J being equal to or greater than $\frac{1}{2}$ said second given diameter,
withdrawing liquid flowing through said chips column from said digesting vessel through said liquid outlet disposed at the top of said digesting vessel without straining at said liquid outlet, the quantity of liquid introduced into said digesting vessel and the first and second diameters being so dimensioned that the velocity of liquid flowing through said chips column to said digesting vessel outlet is substantially less than the velocity of liquid that entrains a significant amount of cellulose material in its flow so that substantially no cellulose particles pass upwardly from said chips column to said liquid outlet,
withdrawing treated cellulose material from the bottom of said digesting vessel at a given rate so that the chips column is maintained at substantially the same level while individual particles thereof move downwardly through said vessel, and
removing any particles that are entrained in liquid above said chips column flowing from said chips column to said digesting vessel top outlet from said liquid by alternatively applying suction to one of two screens disposed on generally vertical digesting vessel walls between the chips column top and said liquid outlet while not applying it to the other screen.

4,061,194
TRACTOR MOUNTED SCRAPER BLADE
James Edson McCanse, Oregon, Ill., assignor to Hesston Corporation, Hesston, Kans.
Filed Mar. 4, 1976, Ser. No. 663,670
Int. Cl.^{2} A01B *59/043;* E02F *3/85*
U.S. Cl. 172—447 **3 Claims**

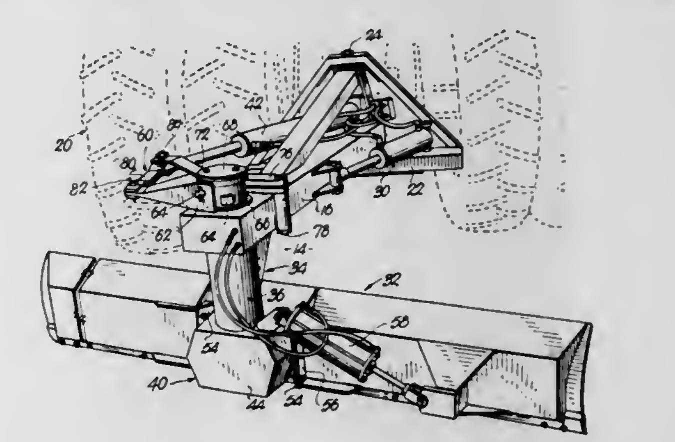

1. In a material handling assembly;
a swingable boom;
a first unit for swinging the boom in opposite directions;
an elongated scraper blade having means pivotally supporting the same on the boom for swinging movement therewith and with respect thereto;
a second unit;

a coupling between the second unit and the blade for swinging the latter in opposite directions relative to the boom during actuation of the second unit, to and from a position placing its longitudinal axis in perpendicular relationship to the normal course of travel of said assembly in all positions of swinging movement of the boom, and for placing said axis substantially parallel to said course when the boom is swung toward either end of its path in swinging movement,

said units each comprising a first and a second double acting fluid pressure piston and cylinder means, each provided with a reciprocable piston rod extending from one end thereof,

each cylinder having a pair of fluid receiving lines, one communicating with the rod end thereof and the other communicating with the piston end thereof, said lines being adapted for connection with a source of fluid under pressure;

manually operable valving coupled with said lines for controlling the flow of said fluid to and from each end of each cylinder respectively; and

relief valving coupled with said lines for bypassing fluid between the cylinders when the resistance to swinging movment of the boom or the blade in either direction exceeds a predetermined amount.

4,061,195

LOCK AND LIFT MECHANISM FOR A FOLDABLE IMPLEMENT

Joseph E. Pryor, Athens, Tenn., assignor to Austin Industries, Inc., Dallas, Tex.

Filed Jan. 30, 1976, Ser. No. 653,965

Int. Cl.² A01B *63/32, 65/02*

U.S. Cl. 172—456 **9 Claims**

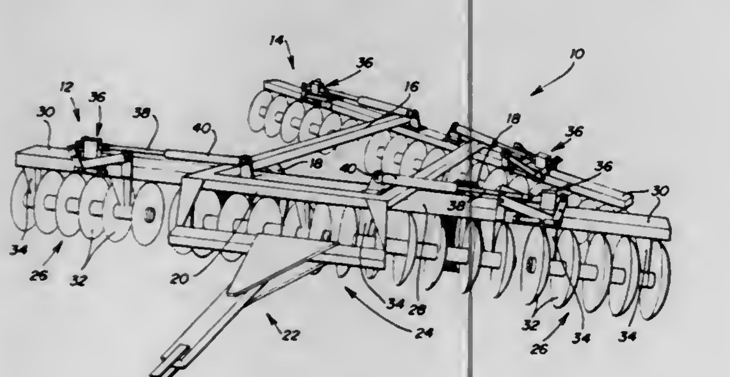

1. In an implement having a central tool bar and at least one wing tool bar pivotally connected to said main tool bar for pivotal movement between a folded and an extended position, a lock means comprising:

a hinge means pivotally connected to said main tool bar and rigidly affixed to said wing tool bar;

housing means secured to one surface of said wing tool bar in close proximity to the end portion adjacent said main tool bar, said housing means having an opening therethrough defining a passageway parallel to the axis of said wing tool bar and a surface against which a force may be exerted during folding of the wing tool bar;

activating means secured to said implement;

T-shaped linking means extending through the passageway of said housing, the leg portion of said linking means being pivotally connected to said activating means and the top portion of said linking means extending to either side of the passageway and positioned to abutt the surface on the housing mean when said linking means is being retracted by said actuating means to effect folding of said wing tool bar;

first guide means secured to at least one side portion of said wing tool bar in close proximity to its end portion adjacent said main tool bar, said guide means having an opening therethrough defining an elongated passageway along the axis of said wing tool bar;

second guide means secured to at least one side portion of said main tool bar in close proximity to said first guide means, said second guide means having an opening therethrough defining a passageway which is aligned with the passageway of said first guide means when said wing tool bar is in an extended position; and

pin means pivotally secured to the other end portion of said linking means, said pin means slidably positioned within the passageway of said first guide means so that upon activation of said activating means said pin is caused to slidably pass into the passageway of said second guide means when said lock is in a locking position and to be slidably withdrawn therefrom when in an unlocked position.

4,061,196

RESILIENT YOKE MOUNTINGS FOR VIBRATORY PILE DRIVERS AND EXTRACTORS

Alvin E. Herz, Lakeland, Fla., assignor to L. B. Foster Company, Coraopolis, Pa.

Filed Aug. 30, 1976, Ser. No. 718,877

Int. Cl.² E02D *7/18*

U.S. Cl. 173—49 **7 Claims**

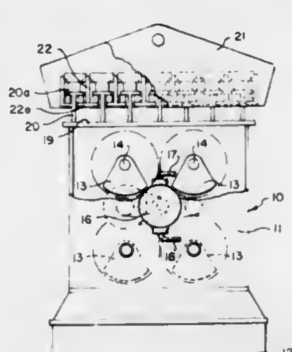

1. In combination a vibratory pile driver and extractor including a body assembly having at its lower end engaging means engaging a pile to be driven or extracted and transmitting vibration to said pile generated by rotating eccentric weights on said body, yoke means above and movable relative to said body assembly, said yoke means including at its upper part means adapted for attachment to a hoisting cable, a pair of first horizontal abutment means in the same plane on each of said body assembly and yoke and a second horizontal abutment means on the other of said body assembly and yoke, said first and second horizontal abutment means being spaced apart vertically and resilient rubber support means between said each of said pair of horizontal abutment means and said horizontal abutment means whereby said body assembly and yoke are resiliently connected through said rubber support means and the said abutment.

4,061,197

METHOD AND APPARATUS FOR DRILLING IN PERMAFROST AND THE LIKE

Sam C. Skidmore, Jr., Box 470, Fairbanks, Alaska 99707

Filed Nov. 6, 1975, Ser. No. 629,387

Int. Cl.² E21B *1/06*

U.S. Cl. 175—101 **9 Claims**

1. An article of manufacture, comprising:

a. an earth auger consisting of a helical flight which is affixed to the exterior of a central tube, with the upper end of the auger having means by which torque may be applied for rotating the auger, and the bottom end of the tube being open to present an exposed bore, and the internal diameter of the tube being slightly greater than the outer diameter of a downhole percussion hammer to be accommodated therein, so that the tube may receive an auxiliary earth-drilling mechanism in the form of a percussion hammer, and there being a thin annular space between the hammer and the central tube; and

b. structural means located internally of the tube at the top end thereof for engaging threads at the top end of a downhole percussion hammer, such that a percussion hammer may be threadably engaged as a self-contained unit with

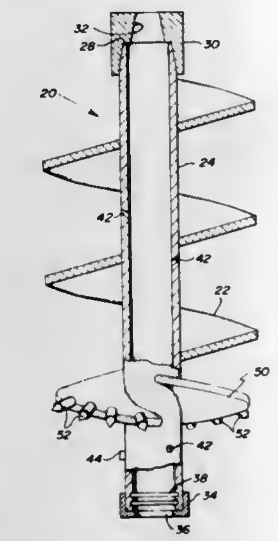

respect to said central tube, and said structural means further having a central longitudinal bore for passing compressed air from an external source to a central opening in the end of the downhole percussion hammer, whereby the single act of providing relative rotation between the central tube and the percussion hammer will serve both to join the two elements structurally and to establish a flow path for compressed air to the hammer.

4,061,198

ELECTRONIC WEIGHING SYSTEMS

Jack Richard Caldicott, Stockport, England, assignor to Railweight Inc. (U.K.) Limited, England

Filed Oct. 8, 1976, Ser. No. 730,963

Claims priority, application United Kingdom, Oct. 10, 1975, 41703/75

Int. Cl.² G01G *19/52, 23/14, 3/14*

U.S. Cl. 177—50 **4 Claims**

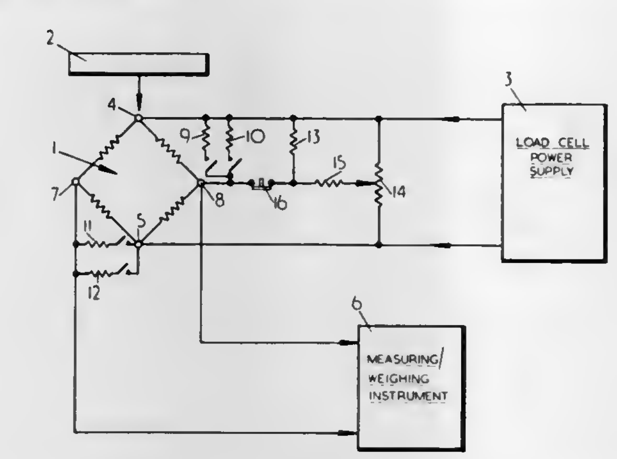

1. A weighing system in which a weighing platform is operatively coupled to a transducer arrangement included in an electrical bridge circuit having connected therein a tare resistor arrangement for balancing out the tare weight of the platform, comprising means for selectively isolating the effect of the tare resistor arrangement from the bridge circuit so that the system output indicates the sum of the tare weight of the platform and the weight of any load on the platform.

4,061,199

CHASSIS FOR A VEHICLE CAPABLE OF TRAVELLING OVER OBSTRUCTIONS

Werner Last, Hamburg, Germany, assignor to Karl-Heinz Werner Toosbuy, Bredebro, Denmark

Filed Nov. 26, 1975, Ser. No. 635,488

Claims priority, application Germany, Dec. 3, 1974, 2457013

Int. Cl.² B62D *57/02*

U.S. Cl. 180—8 A **15 Claims**

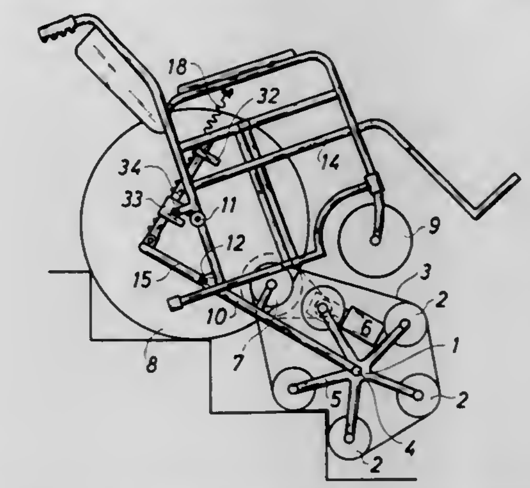

1. A mechanism for a vehicle having a frame capable of travelling over obstacles, comprising

a. a chassis;

b. roadwheels supporting the frame;

c. a spider rotatably connected to the chassis and having a plurality of step wheels rotatably mounted at the ends of its arms;

d. endless elastic belt means connecting the step wheels by engaagement with their peripheries;

e. the distance between successive step wheels being sufficient to permit the belt means to fold into engagement with the riser and tread of a stair step encountered by the vehicle; and

f. a drive means on said vehicle, including a drive wheel disposed outside the periphery of the spider, for directly engaging and driving the belt means.

4,061,200

VEHICULAR ENERGY GENERATION SYSTEM

Joseph A. Thompson, 301 NE. 11th St., Oklahoma City, Okla. 73104

Filed Jan. 12, 1976, Ser. No. 648,390

Int. Cl.² B60K *25/08*

U.S. Cl. 180—66 B **8 Claims**

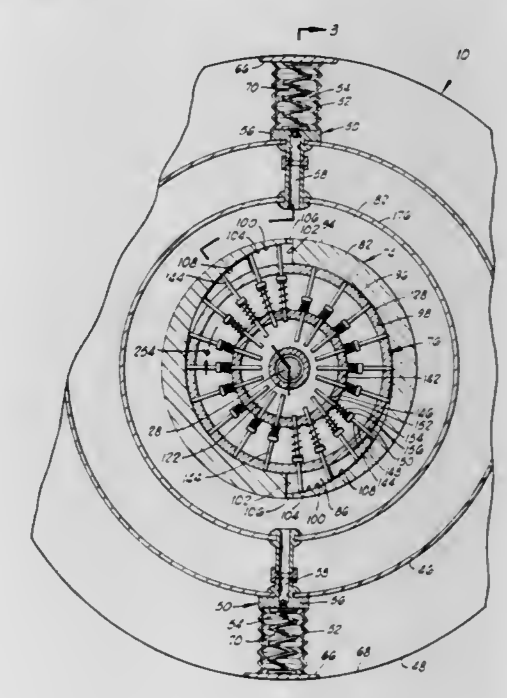

1. An energy generation system for use with a vehicle or the

like having an axle and supportable on a supporting surface, comprising:
- resilient tire means mounted on said axle for supporting at least a portion of the weight of said vehicle on the support surface, said tire means being compressible in response to the weight of the vehicle supported thereby;
- a fluid motor secured to said vehicle and having a fluid inlet and a fluid outlet and a fluid motor rotor journaled for rotation about the axis of rotation of said axle;
- output shaft means journaled in said fluid motor and drivingly connected to said fluid motor rotor for rotation by said fluid motor rotor;
- pump means having a fluid inlet and a fluid outlet and operatively engageable with said tire means for pumping fluid in response to the compression of said tire means when said tire means rolls over the support surface;
- first conduit means communicating between the fluid outlet in said pump means and the fluid inlet in said fluid motor;
- second conduit means communicating between the fluid outlet in said fluid motor and the fluid inlet in said pump means; and
- wherein said resilient tire means is characterized further to include:
- wheel means mounted on said axle for rotating about the axis thereof; and
- a tubular, inflatable tire mounted on said wheel means; and
- wherein said pump means is characterized further to include:
- at least one radially compressible chamber mounted on said wheel means and disposed within said tubular tire and engageable therewith, and with the interior of said compressible chamber communicating with the fluid outlet and the fluid inlet of said pump means.

4,061,201
HYDRAULIC SYSTEM WITH DUAL PUMPS FOR TRACTOR BRAKE, STEERING, AND LOADER VALVES
Donnell Lynn Dunn, Terre Haute, Ind., assignor to J. I. Case Company, Racine, Wis.
Filed Aug. 26, 1976, Ser. No. 718,011
Int. Cl.² B62D *5/08*
U.S. Cl. 180—133 **7 Claims**

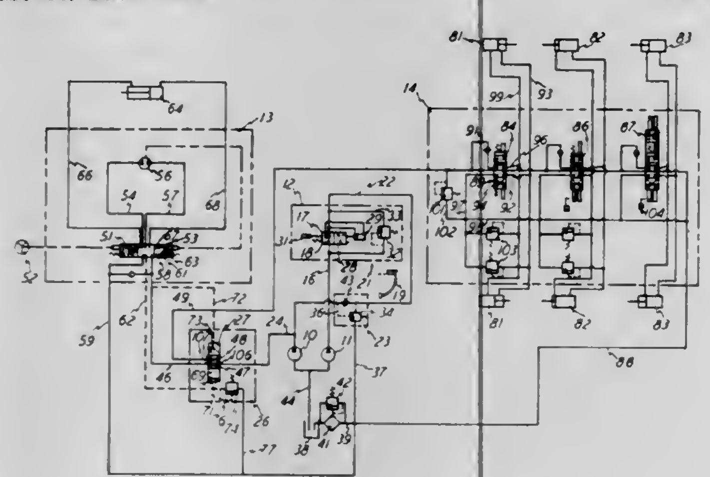

1. A hydraulic system with dual pumps for tractor brake, steering, and loader valves, comprising two hydraulic pumps, a hydraulic brake valve having a hydraulic flow-through passageway leading into and out of said brake valve and being hydraulically connected with one of said pumps, a pressure compensating valve having a hydraulic inlet and two hydraulic outlets, a hydraulic connection hydraulically interconnected between the other of said pumps and said pressure compensating valve inlet, an additional hydraulic connection interconnecting the outlet side of said brake valve flow-through passageway and the first mentioned hydraulic connection interconnecting the other of said pumps and said pressure compensating valve inlet for hydraulic flow from said brake valve and said other pump to said pressure compensating valve and thereby direct the flow of both said pumps to said pressure compensating valve, a hydraulic steering valve hydraulically connected with one of said outlets of said pressure compensating valve, a hydraulic pilot line hydraulically connected between said steering valve and said pressure compensating valve for hydraulically setting the latter in accordance with hydraulic pressure in said steering valve for directing hydraulic flow relative to said two outlets, and a loader valve hydraulically connected with the other of said outlets of said pressure compensating valve for receiving hydraulic flow from said pressure compensating valve.

4,061,202
HUNTING STAND
Donald E. Campbell, 9575 Gorman Road, Laurel, Md. 20810
Filed Apr. 1, 1976, Ser. No. 672,735
Int. Cl.² E06C *1/10, 1/36, 7/48*
U.S. Cl. 182—20 **2 Claims**

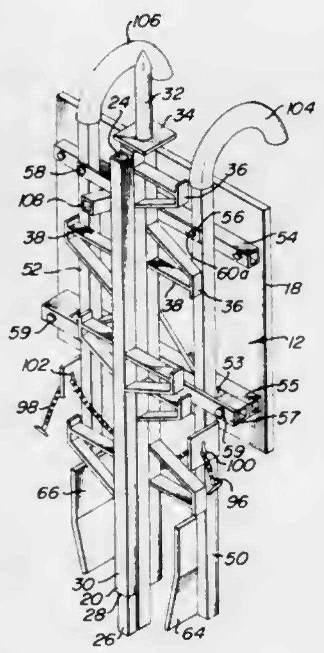

1. A hunting stand vertically displaced from a ground surface and adapted to be mounted to a tree comprising:
a. platform means having an extended planar surface;
b. sectional ladder means removeably constrained to said ground surface and said platform means on opposing ends thereof; and,
c. stand securing means moveably mounted to said platform means, said stand securing means including (1) a pair of arm members transversely moveable with respect to said platform means for frictionally gripping said tree on opposing sides thereof, (2) a grip bar member having a substantially smooth concave seat adapted in contour to frictionally interface with an arcuate surface contour of said tree and being linearly displaceable with respect to said platform means in a longitudinal direction for frictionally contacting said tree between said concave seat and said pair of arm members, said stand securing means further including locking means secured to said platform means and said pair of arm members for maintaining said arm members in constrained contact with said boundary wall of said tree, said locking means having a rotatable arm member mounted to said platform means; and, a chain element constrained to said rotatable arm member and passing to a key hole slot formed in at least one of said arm members for positionally constraining said arm member in a predetermined location.

4,061,203
LADDER ATTACHMENT
Frederick J. Spencer, Hinsdale, and Edward Spencer, LaGrange, both of Ill., assignors to Spencer Tool & Mfg. Co. Inc., Chicago, Ill.
Filed Feb. 28, 1977, Ser. No. 772,932
Int. Cl.² E06C *7/48*
U.S. Cl. 182—214 **3 Claims**

1. A knockdown antisway or stabilizer device for the upper

end of an extension ladder having a pair of side rails and rungs comprising, in combination:
a. a pair of horizontal elongated tubular members removably secured together end to end, the free end of said members being bent at right angles to said horizontal portion of said members and both bent in the same direction to form legs;
b. a pair of U-shaped angle brackets each having a pair of spaced side walls and a connector top wall, and outwardly

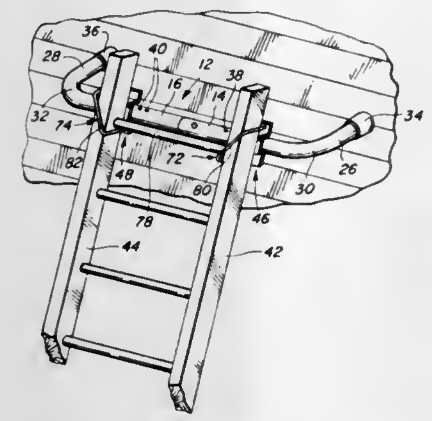

extending flanges on the free ends of said side walls, each of said flanges having an arcuate slot formed therein and arranged cater-cornered from each other, each side wall having opposed apertures therein;
c. means for removably securing said brackets one to each of said members in spaced relation; and
d. a pair of U-shaped bolts having legs for anchoring said brackets and members to the rails of said ladder and about the uppermost rung thereof.

4,061,204
ENGINE PRE-OILER
Walter C. Kautz, Jr., 21707 NW. 51st Ave., Ridgefield, Wash. 98646
Filed Feb. 9, 1976, Ser. No. 656,140
Int. Cl.² F01M *9/00*
U.S. Cl. 184—6.3 **2 Claims**

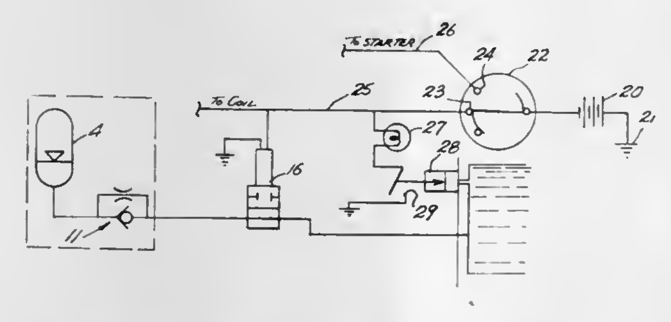

1. A pre-oiler system for pressurizing lubricant within machinery prior to normal operation of the machinery lubrication system, said pre-oiler system comprising,
- an oil vessel containing lubricant under pressure, said vessel including a base,
- means selectively communicating the oil vessel interior with a lubrication passageway of the machinery, said means remotely actuated upon closure of an electrical circuit preparatory to starting of the machinery, and
- a valve assembly regulating lubricant flow between said vessel and said selectively communicating means and including a spring biased movable valve body having a first position whereat a restricted return flow of lubricant may enter said vessel during normal operation of the machinery lubrication system to gradually charge said vessel while adequate machinery lubrication system pressure is maintained, said valve body having a second position permitting an oppositely directed outward flow of lubricant from said vessel for machinery lubrication at a greater rate than the first position flow rate of said valve body, said movable valve body having multiple ports therein some of which are closed in said first position while other of said ports at all times remaining open.

4,061,205
CHECKOUT ASSEMBLY HAVING DUAL BAGGING STATION
Malcolm E. Musser, P.O. Box 386, Jackson Center, Ohio 45334
Filed Nov. 12, 1976, Ser. No. 741,380
Int. Cl.² A47F *10/00;* **B65G** *15/12, 21/14*
U.S. Cl. 186—1 A **7 Claims**

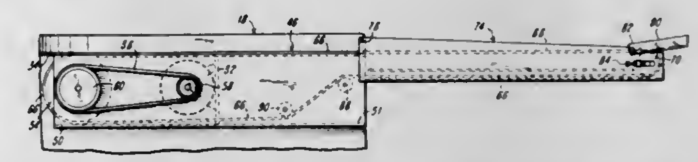

1. Conveyor apparatus adapted for use with a checkout assembly, comprising:
- an endless rotatable conveyor member, the endless rotatable conveyor member having a first portion and a second portion, fixed support means rotatably supporting the first portion of the endless rotatable conveyor member, movable support means supporting the second portion of the endless rotatable conveyor member, the movable support means being movable to an active position in which the second portion of the endless rotatable conveyor member is in substantially the same plane as the first portion thereof, the movable support means being movable to an inactive position in which the second portion of the endless rotatable conveyor member is at an angle with respect to the first portion thereof.

4,061,206
BICYCLE BRAKE
William H. Wood, Reseda, Calif., assignor to Airheart Products, Inc., Chatsworth, Calif.
Filed Dec. 27, 1976, Ser. No. 754,426
Int. Cl.² B62L *3/02*
U.S. Cl. 188—26 **11 Claims**

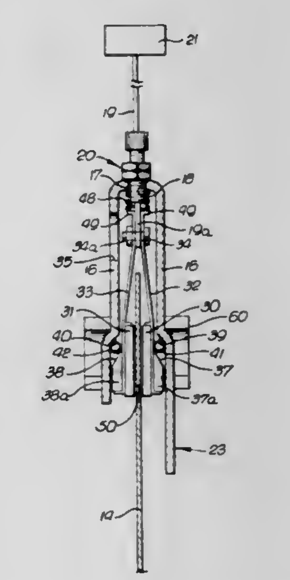

1. In a brake for a motorcycle or bicycle having a frame and a disc rotatable with a wheel, the combination comprising
a. a housing having a fork defining a slot to receive a wheel axle bolt, and a connection to the frame, the housing configured to embrace a portion of the disc,
b. brake pad means located within the housing to laterally engage the disc,
c. a carrier and first ramp means on the carrier and supporting the brake pad means, the carrier being longitudinally movable and laterally resiliently flexible, within the housing,
d. second ramp means on the housing and presented generally toward the first ramp means, and
e. roller means located between the first and second ramp

means to rollably urge the first ramp means and brake pad means laterally toward the disc, with accompanying resilient flexing of the carrier, in response to bodily movement of the carrier and first ramp means in one longitudinal direction,

f. there being a cable having a connection with the carrier and extending from the housing to be pulled for bodily moving the carrier and first ramp means in said longitudinal direction,

g. said housing comprising a U-shaped strap means having two arms and a cross-over connection, said arms extending in said longitudinal direction, said cross-over connection forming an opening to pass said cable,

h. the cable connection, brake pad means, carrier, first and second ramp means and roller means being protectively confined between said two arms of said U-shaped strap means.

4,061,207

MODULATING ARRANGEMENT FOR SERVO-MOTOR ACTUATED DISC BRAKE

Karl Gustav Ahlen, Stockholm, Sweden, assignor to S.R.M. Hydromekanik Aktiebolag, Stockholm-Vallingby, Sweden

Continuation of Ser. No. 366,168, June 1, 1973, abandoned. This application Sept. 29, 1975, Ser. No. 617,643

Claims priority, application United Kingdom, Mar. 21, 1973, 13599/73

Int. Cl.² F16D *65/853*

U.S. Cl. 188—264 E **3 Claims**

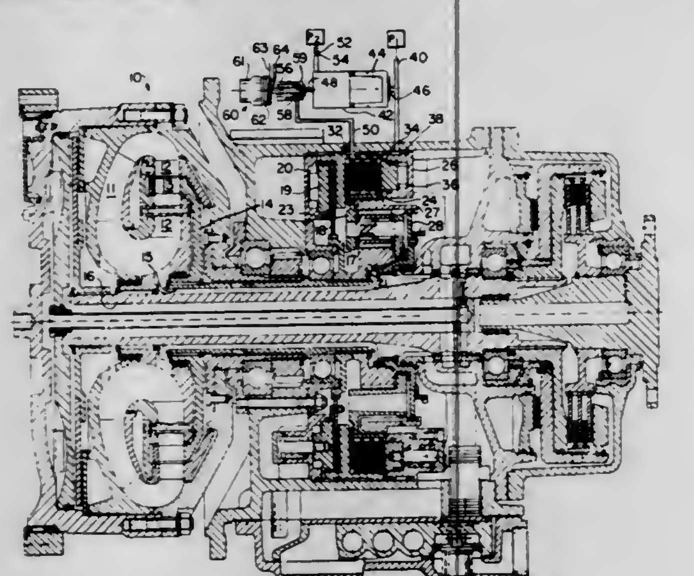

1. A friction brake comprising:

means defining a generally enclosed space containing engaging friction braking surfaces, a fluid operated servo-motor for urging the friction braking surfaces together, said servo-motor defining in part said generally enclosed space, and a retarding means for counterbalancing the urging force of the servo-motor to thus retard the engagement of the braking sufaces as a pressurized fluid is being supplied to the servo-motor, said retarding means comprising means for introducing oil under pressure directly into said generally enclosed space such that said oil under pressure also passes between the friction braking surfaces, the pressure of the oil in said generally enclosed space being sufficiently great to at least partially retard the urging force of the servo-motor tending to bring about engagement of the braking surfaces, said retarding means being operable to introduce said pressurized oil in response to the delivery of said pressurized fluid to the servo-motor to engage the friction braking surfaces and concurrent with the introduction of said fluid to the servo-motor, said retarding means further including limiting means for limiting the time during which the said oil is introduced to said generally enclosed space to only an initial part of the time during which brake engagement is being brought about, and for thereafter permitting reduction of the pressure in the said generally enclosed space to permit the servo-motor to complete the bringing about of brake engagement,

said limiting means including a cylinder, a movable member within the cylinder, one side of the movable member being in a fluid communication with the pressurized fluid entering the servo-motor, and the other side of the movable member containing said oil and being selectively in fluid communication along a fluid path with the said generally enclosed space, whereby as the movable member moves from an original position under the force of the pressurized fluid being delivered to the servo-motor, the movable member urges said oil from the cylinder along said path to the said space and including a maximum pressure valve in said fluid path between the said other side of the movable member and the said generally enclosed space, said maximum pressure valve being openable to permit oil to flow therethrough only after the pressure thereagainst exceeds a predeterminable level, and including a further means separate from the movable member for modifying the opening of said maximum pressure valve independently of the movable member.

4,061,208

PAD-WEAR COMPENSATING DEVICE FOR DISC BRAKE

Yukinori Nishiyama, Hyogo, Japan, assignor to Sumitomo Electric Industries, Ltd., Osaka, Japan

Filed Dec. 8, 1976, Ser. No. 748,443

Claims priority, application Japan, Dec. 17, 1975, 50-150928

Int. Cl.² F16D *65/56*

U.S. Cl. 188—71.9 **7 Claims**

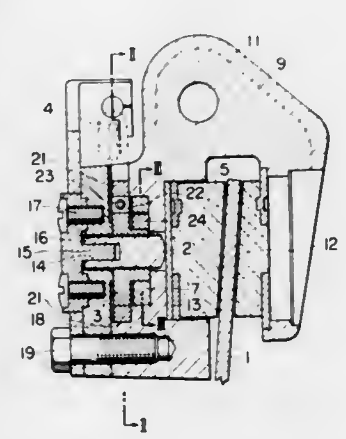

1. In a disc brake assembly including a yoke member (9) arranged to straddle a brake disc (1), a brake pad (5) slidably mounted in the yoke member, an axially movable push rod (2) for urging the pad against the brake disc, a cam nut (3) threadingly engaging the push rod, and rotatable lever means (4, 21) engagable with the cam nut via a one-way clutch mechanism (20, 22, 23) for rotating the cam nut to thereby advance the push rod in the direction of the brake pad, a pad-wear compensating mechanism characterized by:

a cam member engaged with said cam nut to rotate therewith in the direction which moves said push rod towards said pad only after said cam member rotates through a preset angle, unidirectional means for preventing rotation of said cam member in the opposite direction, and the engagement between said cam member and said cam nut stopping the opposite direction rotation of said cam nut after rotation through said preset angle in said opposite direction.

4,061,209

DISC BRAKE CALIPER AND SUPPORT STRUCTURE

David William Gee, Lea Marston, near Sutton Coldfield, England; Horst Willi Klassen, St. Sebastian, and Heinrich Bernard Rath, Koblenz-Luetzel, both of Germany, assignors to Girling Limited, Birmingham, England

Continuation of Ser. No. 563,492, March 31, 1975, abandoned. This application Sept. 20, 1976, Ser. No. 724,534

Claims priority, application United Kingdom, Mar. 12, 1974, 14469/74

Int. Cl.² F16D *65/02*

U.S. Cl. 188—73.3 **39 Claims**

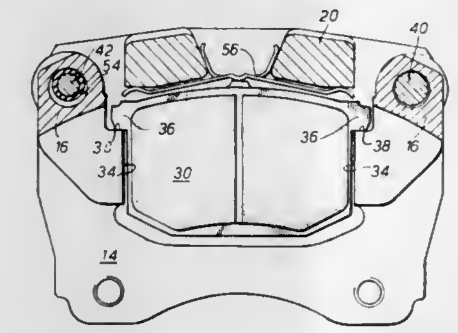

1. A vehicle disc brake comprising a carrier member for fixing to a vehicle, a caliper member slidably connected to the carrier member and an actuator for urging a first friction pad onto one side of a rotatable disc to cause the caliper member to slide relative to the carrier member and apply a second friction pad to the other side of the disc, the sliding connection between the caliper member and carrier member comprising a pair of pins slidable in one of the members and secured to the other of the members, at least one of the pins being received in an oversized opening in said one of said members, and a resilient bush interposed between said oversized opening and said at least one pin so as to surround that pin, the fit of said at least one pin and the bush within the oversized opening being such that said at least one pin can at all times effect radial displacement relative to its associated opening without deformation of the resilient bush, and means resiliently biassing said at least one pin into an eccentric position within the oversized opening.

4,061,210

DEVICE FOR AUTOMATICALLY COMPENSATING FOR WEAR IN THE BRAKING SYSTEMS OF MOTOR VEHICLES

Osvaldo Fasano, Villarbasse (Turin), Italy, assignor to Start S.p.A. Studi Apparecchiature e Richerche Tecniche, Turin, Italy

Filed Nov. 30, 1976, Ser. No. 746,028

Claims priority, application Italy, Dec. 1, 1975, 69952/75

Int. Cl.² F16D *65/54*

U.S. Cl. 188—79.5 P **4 Claims**

1. In a drum brake of the type having a pair of arcuate brake shoes pivotally mounted on a stationary backing plate for movement into and out of engagement with a rotatable brake drum surrounding said brake shoes with each brake shoe including a rim portion provided with a friction lining and a flat web portion, actuating means disposed between opposed ends of said brake shoes for moving said brake shoes into frictional engagement with said drum and spring means for retracting said brake shoes away from said drum, the improvement comprising automatic wear compensating shoe adjusting means including a projection carried by the web of one of the two shoes and having a curved surface lying in a plane parallel to said web, a locking lever pivotally connected to said web for pivotal movement in the plane of the curved surface of said projection and having a cam surface on the end of said lever facing said curved surface of said projection, an elongated rod extending between said two shoes and having one end inserted between said curved surface of said projection and said cam surface of said locking lever and the other end of said rod being connected to the web of the other shoe through a lost motion coupling allowing limited relative movement between said rod and said other shoe in the direction of the length of said rod and resilient means having one end thereof operatively connected to said other shoe with the opposite end of said resilient

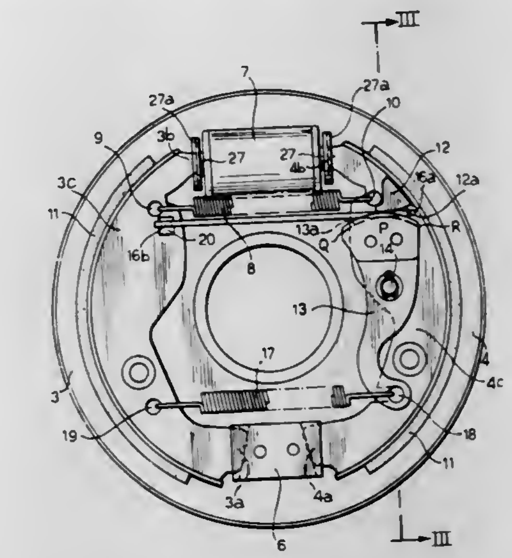

means being connected to said locking lever adjacent the end opposite said cam surface whereby said resilient means will also exert a retracting force on said brake shoes in addition to rotating said locking lever in a direction such that said one end of said rod is locked between said curved surface of said projection and said cam surface.

4,061,211

INTERNAL SHOE DRUM BRAKE

Kazuo Hoshino, Sayama, and Masakazu Tanbara, Higashi-Kurume, both of Japan, assignors to Nissan Motor Co., Ltd., Japan

Filed Feb. 25, 1977, Ser. No. 772,092

Claims priority, application Japan, Jan. 3, 1976, 51-21072

Int. Cl.² F16D *65/56*

U.S. Cl. 188—79.5 P **3 Claims**

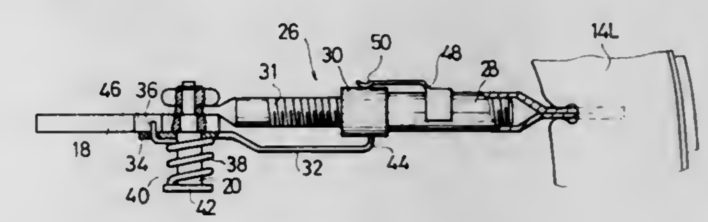

1. An internal shoe drum brake comprising:

a pair of shoes;

service brake means for expanding said brake shoes;

shoe return spring means for retracting said shoes toward each other;

an extensible strut extending between said shoes and including a ratchet wheel which may be rotated to extend said strut, an adjusting lever with a pawl tooth engageable with said ratchet wheel to rotate the same, stopper means held in yielding contact with said ratchet wheel, and an actuating lever with a finger engaging in one of said shoes;

a shaft on which said actuating lever and said adjusting lever are mounted for rotation about the axis of said shaft, said shaft being coupled to said actuating lever for rotation therewith, the adjusting lever being rotatable relative to said shaft and said actuating lever, and

a torsion spring prestressed to transmit forces from said shaft and said actuating lever to said adjusting lever to actuate the same, said torsion spring being also prestressed to hold said pawl in yielding contact with said ratchet wheel;

in which said brake is so designed as to satisfy that:

$$X < \frac{1}{k_1}(Z + F) - k_2$$

$$X > \frac{k_5}{k_4}P - \frac{1}{k_4}Z + k_3$$

$$X > k_5 k_6 P + k_3$$

where

X: a "shoe return spring force," i.e., a load applied to said pair of shoes and to said strut by said shoe return spring means,

Z: a force with which said stopper means is held in yielding contact with said ratchet wheel,

P: a force with which said adjusting lever is held in yielding contact with said ratchet wheel,

F: a force with which said adjusting lever is actuated,

k_1: a coefficient of friction upon rotation of said ratchet wheel in an "adjust direction," i.e., in a sense to increase the length of said strut,

k_2: a resistance opposing expanding movement of said pair of shoes,

k_3: a resistance opposing contracting movement of said pair of shoes,

k_4: a coefficient of friction upon rotation of said ratchet wheel in a direction opposite to the "adjust direction",

k_5: a coefficient representing the effect of the force P on a resistance opposing rotation of said ratchet wheel in the opposite direction to the "adjust direction",

k_6: a ratio of a distance between said pawl tooth of said adjusting lever and the axis of said shaft to a distance between said finger of said actuating lever and the axis of said shaft.

4,061,212
ROTATIONAL RATE OF CHANGE SENSOR
Folke Ivar Blomberg, Duvstigen 4, S-181 40 Lidingo, Sweden
Filed Feb. 11, 1976, Ser. No. 657,104
Claims priority, application Sweden, Feb. 19, 1974, 7401882
Int. Cl.² B60T *8/04*
U.S. Cl. 188—181 A **78 Claims**

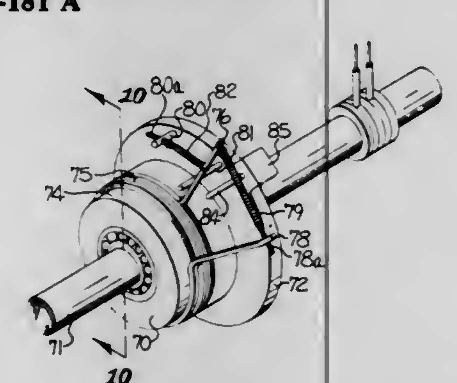

40. In a sensor for responding to the rate of change of changing rotational speeds of a vehicle wheel and including a flyweight coupleable for rotation in response to wheel rotation and selectively decoupleable in response to the exertion on the flyweight of a torque having a magnitude greater than a threshold magnitude due to a change in rotational speed of the wheel, the improvement comprising means for exerting on the flyweight a substantially constant torque resisting decoupled rotation of the flyweight.

4,061,213
BRAKE DISC ADAPTER FOR USE WITH ANTI-SKID SYSTEM
David Larry Davy, Troy, Ohio, assignor to The B. F. Goodrich Company, Akron, Ohio
Continuation of Ser. No. 577,902, May 15, 1975. This application Oct. 22, 1976, Ser. No. 734,944
Int. Cl.² B60T *8/08*
U.S. Cl. 188—181 R **3 Claims**

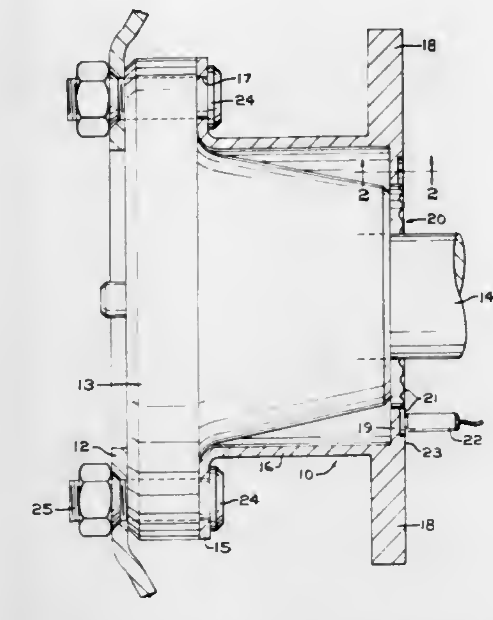

1. In a wheel and disc brake assembly having at least one substantially radially extending rotatable brake disc and a disc adapter connected to and extending axially outwardly from the rotatable brake disc to a rotatable portion of the wheel, the improvement wherein the disc adapter further comprises a substantially radially extending annular flange having a substantially flat radially extending annular surface facing axially inwardly of the wheel, the surface comprising an exciter ring portion having a plurality of equally and annularly spaced, radially extending surface variations, said exciter ring portion being adapted to be operatively situated adjacent to a magnetic pickup device spaced axially inwardly from the surface, said pickup device being a component of a skid control system.

4,061,214
HYDRODYNAMIC BRAKE DEVICE FOR MOTOR VEHICLES
Runo Roy Oskar Ternehäll, Skarhamn, Sweden, assignor to AB Volvo, Goteborg, Sweden
Filed Sept. 16, 1976, Ser. No. 724,065
Claims priority, application Sweden, Sept. 24, 1975, 7510702
Int. Cl.² F16D *65/813*
U.S. Cl. 188—277 **9 Claims**

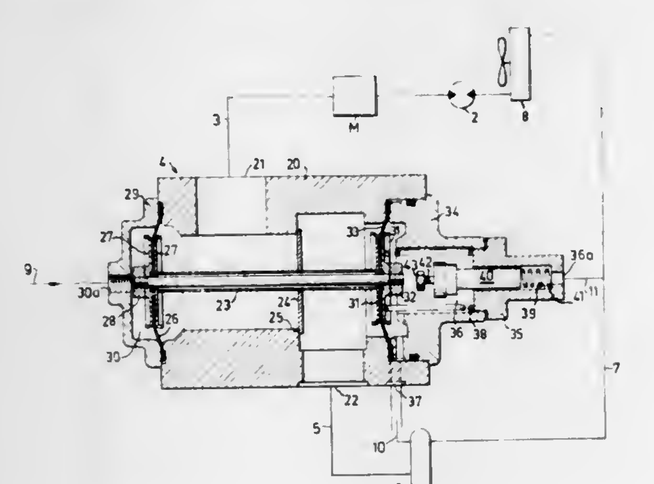

1. Hydrodynamic brake device for motor vehicles, comprising a rotor, rotatably journalled in a stator shell, which rotor is operably connected to the transmission of the vehicle, said stator shell having a fluid inlet and outlet, a regulator valve for regulating the supply of brake fluid to the fluid inlet of the stator shell and a thermostat that controls said regulator valve for regulating the degree of filling of the stator shell depending on the temperature of the brake fluid, said thermostat controlling said regulator valve so as to decrease the degree of filling as the temperature of the fluid increases.

4,061,215
ENGINE EXHAUST BRAKE CONTROLLED BY TRANSMISSION AND ACCELERATOR
Kazuo Ishikawa, Aichi, Japan, assignor to Aisin Seiki Kabushiki Kaisha, Kariya, Japan
Filed June 4, 1976, Ser. No. 692,746
Claims priority, application Japan, June 11, 1975, 50-71091
Int. Cl.² B60K *21/00*
U.S. Cl. 192—4 A **3 Claims**

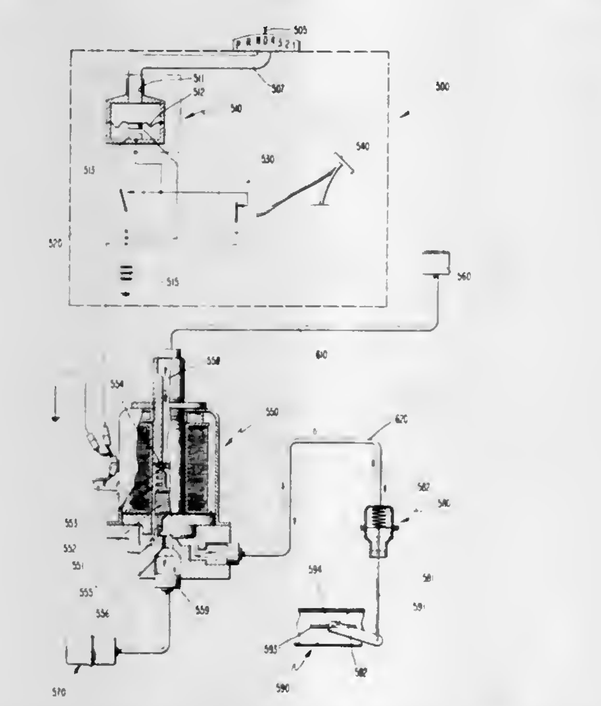

1. An improved internal combustion engine exhaust brake control device for use in conjunction with an automatic transmission, of the type in which a manually actuated switch in series with a throttle switch electrically activates an exhaust brake, the improvement comprising switch means electrically connected in parallel with the manual switch and in series with the throttle switch for automatically energizing the exhaust brake on manually down-shifting the automatic transmission and on release of the throttle setting.

4,061,216
GEARBOX DECOUPLER
Richard N. Sullivan, Tempe, and John E. Vance, Scottsdale, both of Ariz., assignors to The Garrett Corporation, Los Angeles, Calif.
Continuation of Ser. No. 522,080, Nov. 8, 1974, abandoned. This application Oct. 6, 1976, Ser. No. 729,922
Int. Cl.² F16D *11/12, 41/00, 43/28*
U.S. Cl. 192—46 **10 Claims**

1. Apparatus for coupling and decoupling driving and driven elements, comprising:

a. pawl and ratchet type clutch means having complemental parts on said driving and driven elements, at least one of said parts being provided with members movable in a plane substantially radial to the axes of said elements to engage the other part and effect a driving relation between said elements, one part of said clutch means being movable axially relative to one of said elements;

b. means for moving said one part axially of said one element to interrupt and reestablish radial registration of said members with said other part of said clutch means; and

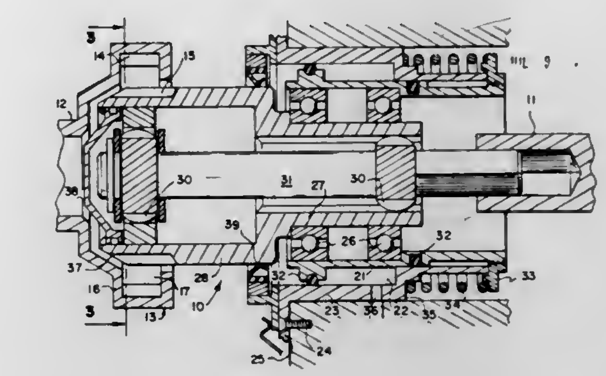

c. resilient means for urging in one direction said means for moving said one part axially of said one element.

4,061,217
CLUTCH ACTUATING APPARATUS CONTROLLED BY ACCELERATOR
Hiroshi Toyota; Kenji Nagatome, both of Yokosuka, and Tamio Kawamoto, Sagamihara, all of Japan, assignors to Nissan Motor Co., Ltd., Yokohama, Japan
Filed Mar. 4, 1976, Ser. No. 664,004
Int. Cl.² F16D *67/00;* **B60K** *21/00*
U.S. Cl. 192—.052 **5 Claims**

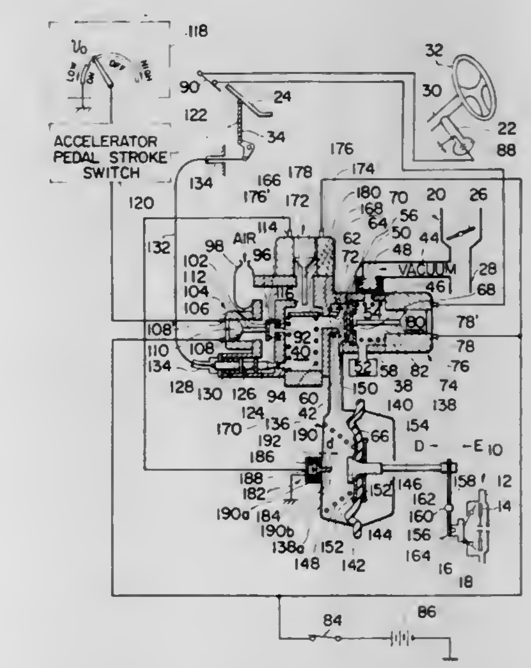

1. In an automotive vehicle including a vacuum source, a transmission gear shift lever and an accelerator pedal, an apparatus for actuating an automatically operated clutch forming part of the driveline of the vehicle and continuously operable between a disengaged condition and a fully engaged condition through a partial torque transmission range, comprising (a) a vacuum chamber in communication with said vacuum source, (b) an air chamber communicable with the open air through each of first and second restricted-flow air inlet ports, (c) a valve chamber alternately communicable with said vacuum chamber and said air chamber, (d) first valve means having a first position isolating said vacuum chamber from said valve chamber and establishing communication between said air chamber and said valve chamber and a second position blocking the communication between the air and valve chambers and establishing communication between the vacuum and valve chambers, (e) second valve means having a first position allowing said first air inlet port to open and a second position closing the first air inlet port, (f) third valve means continuously movable between a first position closing said second air inlet port and a second position allowing the second air inlet port to fully open, (g) first valve actuating means for moving said first valve means in response to predetermined conditions

of the transmission gear shift lever and the accelerator pedal, said first valve actuating means being operative to move said first valve means into said first position thereof in response to at least one of the condition in which the transmission gear shift lever is free from a manipulative effort and the condition in which the accelerator pedal is at least partially depressed from the released position and being operative to move said first valve means into said second position thereof in response to the conditions in which the transmission gear shift lever is being manipulated and simultaneously the displacement of the accelerator pedal from the realeased position is smaller than a predetermined value, (h) second valve actuating means responsive to vehicle speed for moving said second valve means into said first position thereof in response to a vehicle speed higher than a predetermined level and into said second position thereof in response to a vehicle speed lower than said predetermined level, (i) third valve actuating means responsive to movement of the accelerator pedal for continuously moving said third valve means between said first and second positions thereof as the accelerator pedal is moved between the released position and the fully depressed position so that the flow of air through said second air inlet port is varied substantially proportionate to the depth to which the accelerator pedal is depressed from the released position thereof, (j) a differential-pressure assembly including a variable-volume chamber defined in part by a flexible diaphragm which is at least partially movable between positions respectively providing minimum and maximum volume conditions of said variable-volume chamber, and biasing means for urging said diaphragm toward the position providing the maximum volume condition in said variable-volume chamber, said variable-volume chamber being in constant communication with said valve chamber so that said diaphragm is moved toward the position providing the minimum volume condition of the variable-volume chamber in the presence of intake manifold vacuum in said valve chamber and toward the position providing the maximum volume condition of the presence of atmospheric air in the valve chamber, and (k) a mechanical linkage operatively interconnecting said diaphragm and said clutch for driving the clutch toward the disengaged and fully engaged conditions thereof as the diaphragm is moved toward the positions providing the minimum and maximum conditions, respectively, of said variable-volume chamber.

4,061,218
FLUID COUPLING DEVICE AND BIMETAL COIL FOR USE THEREIN
Thomas H. Tinholt, Marshall, Mich., assignor to Eaton Corporation, Cleveland, Ohio
Filed Sept. 27, 1976, Ser. No. 726,907
Int. Cl.² F16D *35/00, 43/25*
U.S. Cl. 192—58 B **12 Claims**

1. A fluid coupling device comprising:
a. a first rotatable member;
b. cover means associated with said first member to define a fluid chamber therebetween;
c. valve means disposed to separate said fluid chamber into a fluid operating chamber and a fluid reservoir chamber;
d. a second rotatable member disposed in said fluid operating chamber and being rotatable relative to said first member;
e. said valve means including a movable valve member operable to control the flow of fluid between said operating chamber and said reservoir chamber, and further including a valve shaft having an inner end disposed within said fluid chamber and an outer end extending through said cover means, said movable valve member being operable associated with said inner end;
f. said cover means including a cover member and means supporting said valve shaft for rotation relative to said cover member, said support means extending outwardly beyond said cover member;
g. a bimetal coil operable to control the position of said valve shaft, said bimetal coil having a first end portion operatively associated with said outer end of said valve shaft and a second end portion fixedly mounted relative to said cover means; and
h. said bimetal coil defining a nominal width over a major portion of its length and including an initial portion adjacent said first end portion having a width substantially less

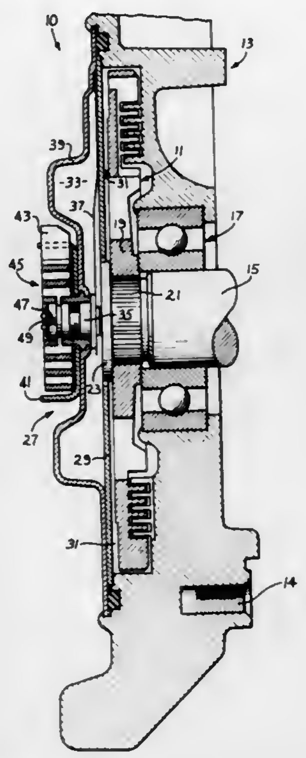

than said nominal width, said initial portion comprising between about one-half and about two turns of said bimetal coil to prevent interference between said coil and said support means and to permit said coil to be disposed nearer said cover member.

4,061,219
PRINTING DEVICE
Tatsuo Nishikawa, Tachikawa, and Toshiaki Ozawa, Tokyo, both of Japan, assignors to Canon Kabushiki Kaisha, Tokyo, Japan
Continuation of Ser. No. 333,551, Feb. 20, 1973, abandoned. This application June 24, 1975, Ser. No. 589,905
Claims priority, application Japan, Feb. 24, 1972, 47-19114; Mar. 2, 1972, 47-21668; Mar. 3, 1972, 47-22099; Mar. 8, 1972, 47-23858; Feb. 24, 1972, 47-22771[U]; Feb. 24, 1972, 47-22772[U]; Feb. 24, 1972, 47-22773[U]; Mar. 2, 1972, 47-26033[U]
Int. Cl.² B41J *33/22*
U.S. Cl. 197—164 **6 Claims**

1. A printing device comprising
a pair of spools mounted on a carriage for supplying and winding up a ribbon for printing, said spools each having a shaft;
a motor; and
means mounted on said carriage for transmitting the rotational force of said motor to one of said spools, said transmitting means including, a first gear driven by means adjacent said carriage engaging said first gear, a plurality of gears rotatably in mesh with said first gear, a turret head disposed coaxially with said first gear for rotatable movement and having thereon said plurality of gears, an index gear coaxially and integrally provided with said turret head, a ball fitted in a valley portion of said index gear, a spring for pressing said ball, a screw for fixing and adjusting the urging force of said spring, intermediate gears mounted on said carriage for selective engagement with one of said plurality of gears, and spool gears provided on the shafts of said pair of spools, respectively, to be in mesh with said intermediate gears, and wherein said intermediate gears transmit the motor rotational force to one of said spool gears upon being selectively rotated by one of said plurality of gears and said plurality of gears, turret head, index gear, ball, spring and screw are employed to automatically switch the ribbon feeding when

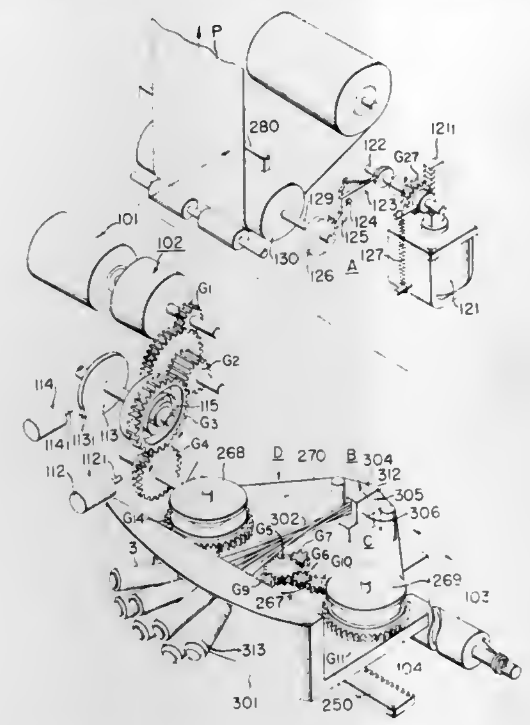

the ribbon has been exhausted from one of said pair of spools.

4,061,220
CORRECTING DEVICE FOR TYPEWRITERS
Chi-Liang Cho, Feldblumenweg 47, Zurich, Switzerland (8048)
Filed Jan. 5, 1976, Ser. No. 584,594
Int. Cl.² B41J *35/22, 35/28*
U.S. Cl. 197—181 **12 Claims**

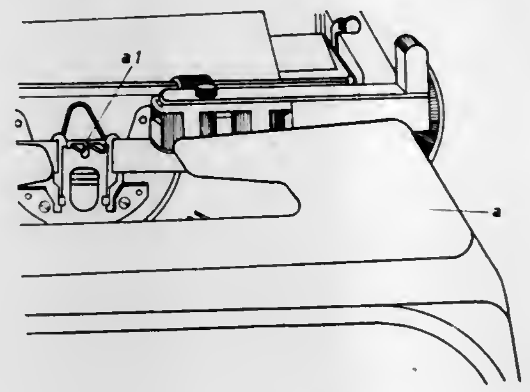

1. A correction device for use in combination with a type bar typewriter including a platen, type keys, type bars, an ink ribbon maintained in a normal rest position between the platen and said type bars and means including a universal bar and an ink ribbon lever for lifting said ink ribbon from its normal rest position to its normal typing position, when a type key is depressed, said correcting device comprising:
a. a cassette containing rotatable feed and take-up spools for receiving a roll type correcting strip, mounting means for fixedly mounting said device on said typewriter and means for removably mounting said cassette on said mounting means, said cassette being mounted on said mounting means with the correcting strip generally above the normal rest position of the ink ribbon and for lateral sliding movement in a direction parallel with the platen of the typewriter between operative and inoperative correcting positions, and correcting strip in said operative position disposed above said ink ribbon rest position and in the normal typing position of said ink ribbon; and
b. means for preventing lifting of said ink ribbon to its typing position when a type key is depressed and said correction device is in said operative position.

4,061,221
DUST CONTROLLING LOADING CHUTE APPARATUS FOR PARTICULATE MATERIAL
Koichi Higashinaka, and Tetsuo Kai, both of Kumagaya, Japan, assignors to Hitachi Metals, Ltd., Tokyo, Japan
Filed Feb. 8, 1977, Ser. No. 766,822
Claims priority, application Japan, Feb. 13, 1976, 51-14019
Int. Cl.² B65G *65/32, 11/14*
U.S. Cl. 198—524 **10 Claims**

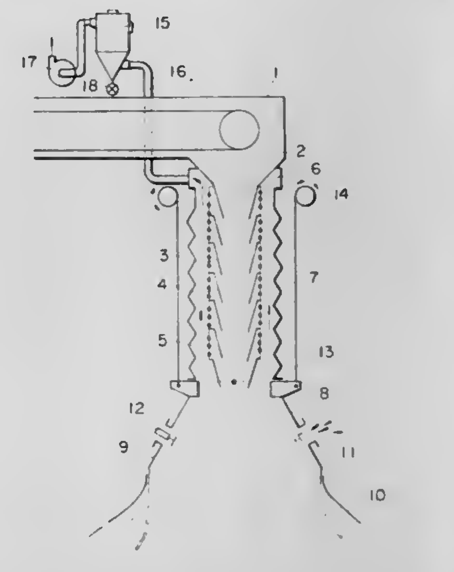

1. An apparatus for loading particulate materials, comprising:
a. a discharge chute assembly including a flexible, longitudinally expandable and contractable outer pipe concentrically surrounding a flexible, longitudinally expandable and contractable inner pipe to define an annular space therebetween,
b. a flared, skirted hood sealingly attached to the lower end of the chute assembly,
c. a plurality of air inlet ports disposed in the hood,
d. an equal plurality of switch means individually disposed adjacent the inlet ports for detecting the surface of a pile of particulate material being discharged through the inner pipe,
e. winch means for controlling the vertical height of the hood and responsive to the actuation of the switch means for raising the hood, and simultaneously contracting the inner and outer pipes, to thereby maintain the hood skirt in contact with the pile surface,
f. a dust collector and precipitator, and
g. exhaust means for drawing air through the inlet ports and up through the annular space into the collector and precipitator, whereby dust generated by the discharged material is contained within the hood, mixed with the air flow, and delivered to the collector and precipitator.

4,061,222
WEB TRACKING APPARATUS
Allen J. Rushing, Webster, N.Y., assignor to Eastman Kodak Company, Rochester, N.Y.
Continuation-in-part of Ser. No. 594,396, July 9, 1975, abandoned. This application June 17, 1976, Ser. No. 696,960
Int. Cl.² B65G *15/64*
U.S. Cl. 198—807 **9 Claims**

1. A control apparatus for tracking an endless belt of material in a predetermined path of movement comprising:
a. a belt steering roller for supporting said belt, said roller being adapted for rotational movement about a first central axis and tilting movement about a second axis extending through the midpoint of said roller and perpendicular to said first axis;
b. means connected to said roller for tilting said roller about said second axis in each of two opposite directions;
c. means for sensing the lateral position of said belt and for producing a first electrical signal representative thereof;

d. means for producing a second electrical signal representative of a desired lateral belt position;
e. means for sensing the tilt position of said roller and for producing a third electrical signal representative thereof; and
f. means for processing said first, second and third signals and for applying to said tilting means a steering roller control signal which compensates for changes in the shape

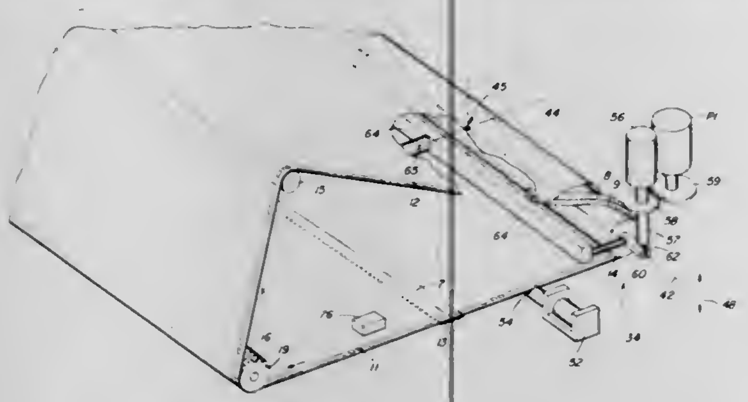

of said belt, said control signal adjusting the position of said tilting means so that said belt repeatedly tracks in said predetermined path of movement, said processing means including means for comparing the magnitude of the weighted sum of said first and third signals with the magnitude of the integrated sum of said first and second signals to produce said control signal, said control signal being proportional to the difference in magnitude between such compared signals.

4,061,223
STRETCHABLE BELT CONVEYOR
Hebert E. McGinnis, Akron, Ohio, assignor to The First National Bank of Akron, Trustee, Akron, Ohio
Filed Sept. 30, 1975, Ser. No. 618,259
Int. Cl.² B65G 41/00
U.S. Cl. 198—821 **20 Claims**

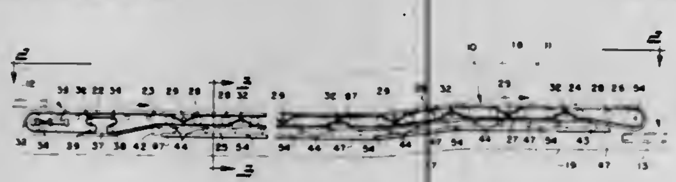

1. In combination, a stretchable endless flexible belt of elastic material having a generally Ushaped cross section with a base portion and side portions, said side portions having longitudinally extending edges, at least two spaced layers of reinforcing members having a high modulus of elasticity molded in said belt of elastic material and extending transversely of said belt between said edges, said reinforcing members being positioned at spaced-apart locations longitudinally of said belt and having a generally U-shape to conform with the shape of said belt, two layers of biased cords of textile material being disposed between said layers of reinforcing members, said cords of one of said layers of biased cords being laid at an opposite bias angle to said cords of the other of said layers of biased cords, and said elastic material being stretchable in the longitudinal direction at installation at least 5 percent and thereafter being stretchable and contractible in the longitudinal direction to permit elongation of said base portion and said side portions of said belt in amounts sufficient to maintain the cross-sectional shape of the belt when the belt is in a horizontal curve.

4,061,224
CARRYING CASE FOR ART SUPPLIES
William F. Fuhri, R.R. 5, Box 84, Liberty, Mo. 64068
Filed Sept. 30, 1976, Ser. No. 728,112
Int. Cl.² B44D *3/00;* B65D *25/04, 25/54*
U.S. Cl. 206—1.7 **10 Claims**

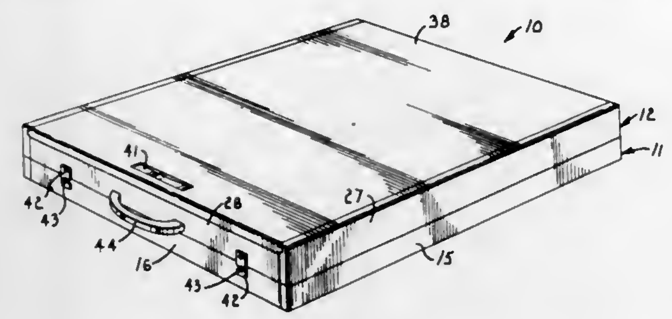

1. In a carrying case for art supplies, the combination of:
an upper section having a plurality of walls and a floor panel;
a plurality of partitions disposed within said upper section to divide same into a plurality of separate compartments each adapted to carry supplies;
a cover for said upper section coupled with the walls thereof for opening and closing movement to open and close said compartments from the top thereof;
a lower section bounded by walls and presenting a substantially hollow interior between said walls for carrying supplies; and
means pivotally coupling said upper section to said lower section for movement between a closed position wherein the floor panel of said upper section extends over said lower section in extension between the walls thereof to substantially cover the interior of said lower section, and an open position wherein the interior of said lower section is open at the top.

4,061,225
TOOL FOR THE INSERTION OF THUMB TACKS
George F. Pettitt, 32 Carlson Parkway, Cedar Grove, N.J. 07009
Filed Nov. 20, 1975, Ser. No. 633,793
Int. Cl.² B65D *69/00, 85/24*
U.S. Cl. 206—230 **2 Claims**

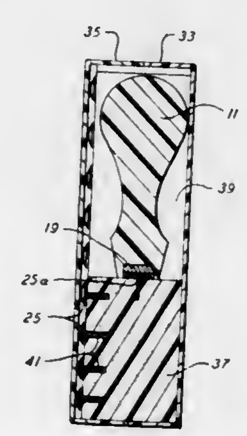

1. A thumb tack insertion means comprising:
a. a tool for inserting a thumb tack including:
1. a base which is rotationally symmetric and has an enlarged rounded portion at one end and a truncated conical section at the other end with a necked-down portion therebetween to form a flared portion of a size permitting the application of thumb and finger pressure, the rounded portion being of a size and spaced therefrom so as to permit palm pressure to also be applied, said truncated conical portion containing a recess of a diameter slightly greater than the size of the head of a thumb tack; and
2. a thin cylindrical magnet havint its top disposed a small distance below the end of said base secured into said

recess whereby a recess capable of retaining the head of the thumb tack will be provided; and
b. means for holding said tool and a supply of thumb tacks including:
1. a plastic box having a top portion and a bottom portion;
2. a three dimensional solid styroform member sized to fit in said box, said stryform member containing a plurality of holes of a diameter greater than the diameter of the shank of a thumb tack, the thickness of said member being such that, when the top of said box is in place, tacks in said holes cannot fall out of said holes, said member also containing a cut-out of a size and shape to receive said tool, whereby said tool may be placed in said cut-out and the cover of said box put in place thereby providing a self-contained unit having both insertion tools and a plurality of tacks; and
3. a tack secured in said styroform so as to contact said magent when said tool is in said box.

4,061,226
THERMOMETER CASE AND HOLDER
R. Eric Essen, St. Louis, Mo., assignor to Intec Industries Inc., St. Louis, Mo.
Filed June 24, 1976, Ser. No. 699,531
Int. Cl.² B65D *85/38, 81/24*
U.S. Cl. 206—306 **15 Claims**

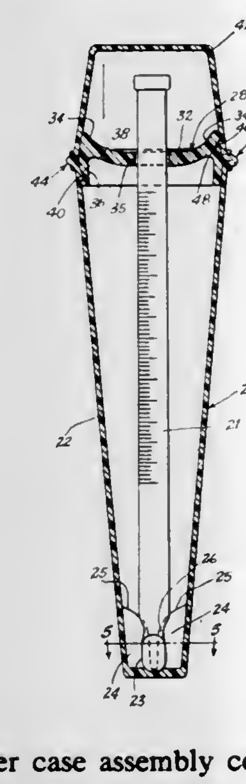

1. A thermometer case assembly comprising an elongated container portion for containing the major lower portion of a thermometer, a spacer lid hinged along one of its edges to an upper edge of said container portion and sized for pivotal movement of the lid about the container edge between an open and a closed position over the container portion, said spacer lid having an aperture therethrough, and a cap having an opening through which the top of the thermometer projects into the cap with the cap closed, said opening being substantially greater in one cross-sectional dimension than another, said cap being hinged along one of its narrower side edges and sized with its greater cross-sectional dimension permitting pivotal movement between an open and a closed position overlying said spacer lid and the top of said container portion when the spacer lid is in the closed position and a thermometer is in the case with its upper end projecting above the top of the lid sufficient for grasping for ready removal from the case, the top of the container portion and the spacer also being substantially greater in one cross-sectional dimension than another, said narrow cross-sectional dimensions of the top of the container, spacer lid, and cap being substantially closer to the cross-sectional dimension of the thermometer than the other of said cross-sectional dimensions.

4,061,227
SHOCK AND HEAT RESISTANT STORAGE UNIT
Anthony Olbres, Hampton, N.H., assignor to The Morley Company, Portsmouth, N.H.
Continuation of Ser. No. 571,420, April 24, 1975, abandoned. This application Sept. 13, 1976, Ser. No. 722,477
Int. Cl.² B65D *81/16, 85/30*
U.S. Cl. 206—454 **1 Claim**

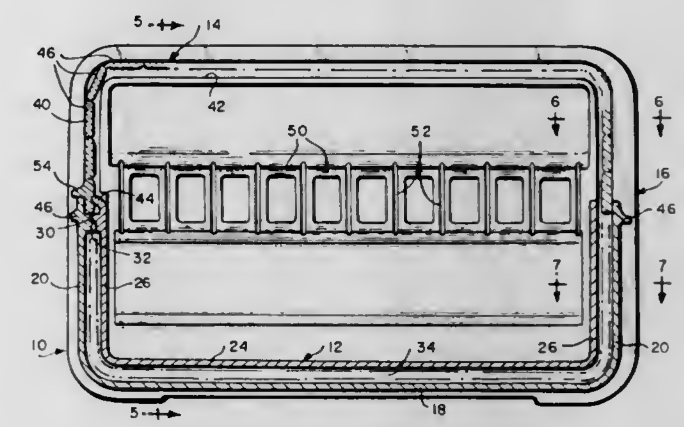

1. A shock and heat-resistant storage unit comprising spaced parallel side wall panels of foam plastic, each of which contains at its inner side a first continuous groove of predetermined depth which runs parallel to the top, bottom and ends of the side walls and outer and inner second and third continuous grooves of predetermined greater depth than the first groove which runs parallel to the bottom and up the ends of the side wall panels at opposite sides of the first groove to a level substantially midway between the top and the bottom, the outer grooves containing at their upper ends laterals, an outer U-shaped bottom wall molding comprising a bottom panel and integral end panels, the opposite edges of said bottom panel and end panels being engaged within said outer grooves and said end panels having at their upper ends outwardly projecting, transversely extending shoulders interengaged with the laterals at the upper ends of the outer grooves, one of the end panels having at its inner side below the top an inwardly projecting, transversely extending shoulder, said side wall panels and U-shaped bottom wall molding collectively constituting an outer supporting structure which is resistant to heat transfer and shock; an inner U-shaped bottom molding comprising a bottom panel and integral end panels, the opposite edges of said bottom panel and integral end panels being engaged within the inner grooves and one of the panels of the inner U-shaped bottom wall molding having at its upper end an outwardly divergent, transversely extending lip and below the lip an outwardly projecting, transversely extending shoulder which rests on the transversely extending shoulder along the upper end of said one of the panels of the outer U-shaped bottom wall molding, said lip providing in conjunction with the end panel at the upper end of said outer U-shaped bottom molding, a transversely extending open locking groove narrower at the top than at the bottom and an articulated closure member comprising a plurality of spaced, parallel, transversely extending narrow slats integrally joined along their longitudinal edges by hinge means and of a length corresponding to a distance between the bottoms of the first groove disposed in the space between the outer and inner U-shaped bottom wall moldings with their opposite ends slidingly engaged with said first grooves for movement in said first grooves from a position concealed within the space between the outer and inner U-shaped bottom moldings to a position covering the open top of the structure, said closure having along one end a latch adapted to be forced into the locking groove to lock the closure in its closed position and a part extending outwardly therefrom which provides a fingerhold by means of which the latch may be engaged with and disengaged from said locking groove and said wall panels having at their inner sides longitudinally spaced, parallel, vertically disposed slots for removably

receiving panels to divide the interior into a plurality of compartments and panels mounted in said slots.

4,061,228

SHIPPING CONTAINER FOR SUBSTRATES

Douglas M. Johnson, Waconia, Minn., assignor to Fluoroware, Inc., Chaska, Minn.

Filed Dec. 20, 1976, Ser. No. 752,786

Int. Cl.² B65D *85/48*

U.S. Cl. 206—454 18 Claims

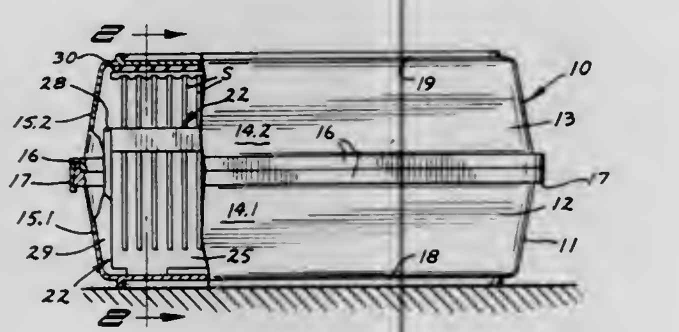

1. A shipping container for substrates comprising:
an elongate rigid box to extend horizontally and including a removable cover defining the top wall of the box;
means in the box defining a plurality of upright slots spaced at regular intervals from each other to receive such substrates and hold the substrates in upright position; and
an elongate substrate-retaining cushion including an elongate stiff panel of resiliently yieldable plastic material and lying along the inside of said top wall to confront the top edges of the substrates, one face of the panel facing upwardly and confronting the top wall of the box and having a plurality of elongate resiliently flexible ribs standing on edge and in edgewise engagement with the adjacent top wall, said ribs being flexed to continually urge the panel away from the top wall, and the lower face of the panel confronting and engaging the upper edges of the substrates and bearing downwardly thereon and having depending and spaced lugs extending between the substrates and preventing transverse movement thereof.

4,061,229

DISPLAY DEVICE FOR BICYCLE BRAKE SHOES

Norio Ohtsuka, Ayase, Japan, assignor to Bridgestone Cycle Industry Co., Ltd., Tokyo, Japan

Filed Mar. 1, 1976, Ser. No. 662,731

Claims priority, application Japan, Jan. 7, 1976, 51-506

Int. Cl.² B65D *85/68, 73/00*

U.S. Cl. 206—486 1 Claim

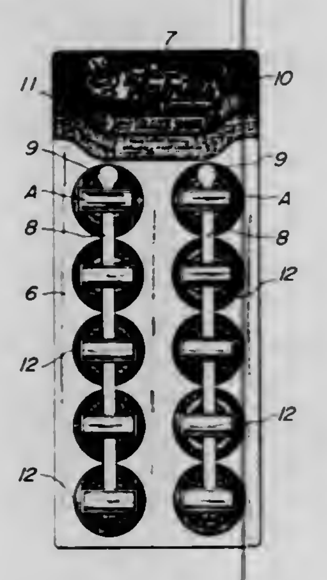

1. A display device for bicycle brake shoes, each of said shoes having a metal brake holder provided on one side with a brake rubber and on its opposite side with a single mounting screw with at least one washer and a nut engaged thereon, said display device comprising:
a longitudinally extending elongate plate-shaped body provided at its upper portion with a hanger hole and below said hanger hole with a plurality of vertically arranged longitudinal grooves;
each of said grooves having a width which is slightly larger than the diameter of said mounting screw and smaller than the outer diameter of said washer and said nut;
each said longitudinal groove being formed at its top end with an enlarged opening which is slightly larger than said outer diameter of said washer and nut whereby the assembled brake shoes may be placed on and removed from said device without removal of said nut and bolt;
said longitudinally extending elongate plate-shaped body being provided above said longitudinal grooves with a blank area adapted to receive advertising indicia, and along the length of said longitudinal grooves with vertically spaced printed marks, said brake shoes being secured to said device with said nuts tightened to hold the shoes in position over said printed marks vertically spaced from one another.

4,061,230

CRANE CROSSHEAD ASSEMBLY MOUNTED ON A PEDESTAL

John B. Goss; William D. Morrow, both of Houston, Tex., and Jack William Corbett, Lafayette, La., assignors to Pedestal Crane Corporation

Filed Jan. 8, 1976, Ser. No. 647,367

Int. Cl.² B66C *23/84*

U.S. Cl. 212—70 5 Claims

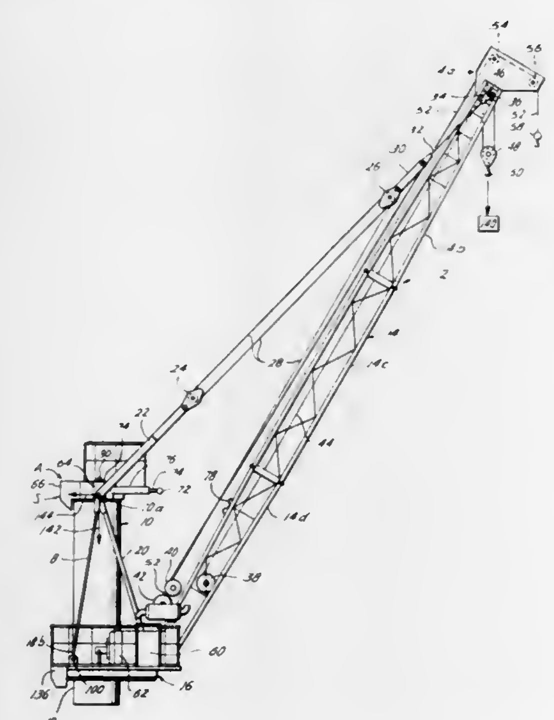

1. In a crane having a boom adapted to be mounted on a pedestal, the pedestal having an upper end, a crane mounting system comprising:
a crosshead assembly for connection to the crane boom and adapted to be rotatively mounted in proximity to the upper end of the pedestal;
bearing means with the upper end of the pedestal for allowing rotation of said crosshead assembly about the longitudinal axis of the pedestal, said bearing means including a pair of arcuate sections mounted with the upper end of the pedestal in spaced relationship from the longitudinal axis of the pedestal at the upper end of the pedestal for providing for limited lateral and pivotal movement of said crosshead assembly relative to the longitudinal axis of the pedestal;
a support column mounted with the upper end of the pedestal and extending upwardly therefrom, with the longitudinal axis of said support column being in substantial alignment with the longitudinal axis of the pedestal, said support column being receivably mounted between said arcuate sections, said crosshead assembly being rotatably mounted about said support column; and,
a substantially rectangular mounting plate for mounting said arcuate sections therewith and having an opening formed centrally thereof, said plate adapted to be disposed about said support column with said support column being within said opening of said mounting plate, said mounting plate being mounted within a rectangular opening centrally formed in said crosshead assembly for limited lateral movement of said crosshead assembly with respect to the pedestal.

4,061,231

PIPE HANDLING APPARATUS FOR PIPE LAYING BARGES

J. C. Birdwell, Houston, Tex., assignor to Midcon Pipeline Equipment Co., Houston, Tex.

Division of Ser. No. 592,170, July 1, 1975, Pat. No. 3,984,007. This application June 10, 1976, Ser. No. 694,890

Int. Cl.² B65G *25/02*

U.S. Cl. 214—1 P 6 Claims

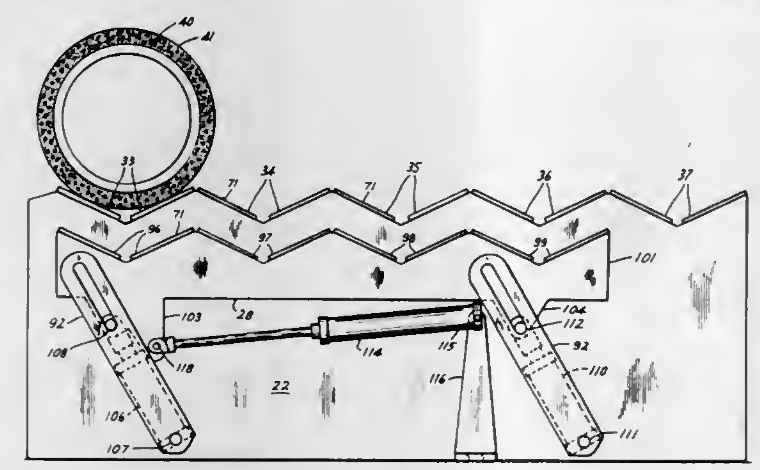

1. Pipe lifter conveyor apparatus, comprising, in combination, a generally horizontally disposed elongate pipe lift beam having an upwardly facing pipe seat means at each end thereof adapted to support a pipe disposed thereon transversely of said pipe lift beam, said pipe lift beam having a pivotal connection adjacent each end thereof, a pair of first drive cylinder means each pivotally connected to one of said pivotal connections of said pipe lift beam at its upper end and each being stationarily pivotally supported beneath said pipe lift beam at its lower end, generally horizontally disposed second drive cylinder means disposed generally parallel to said pipe lift beam and having a pivotal connection to said pipe lift beam at one of its ends and having its other end stationarily pivotally supported, said first drive cylinder means being adapted to independently move said ends of said pipe lift beam in pivotal directions of said first drive cylinder means, said second drive cylinder means being adapted to move said pipe lift beam longitudinally, said first and second drive cylinder means being adapted to cooperatingly move said pipe lift beam to selectively move either one of said pipe seat means between a common central position and extended positions at its end of the apparatus, whereby a pipe may be selectively moved by said apparatus between any of said extended positions at either end of said apparatus and said common central position.

4,061,232

RECTILINEAR TRANSPORT MEANS

Ralph A. Sickles, P.O. Box 3396, Scottsdale, Ariz. 85257

Continuation-in-part of Ser. No. 606,229, Aug. 20, 1975, abandoned. This application Dec. 8, 1976, Ser. No. 748,643

Int. Cl.² B65H *29/38*

U.S. Cl. 214—1 BB 19 Claims

1. In a rectilinear transport means; a stationary frame; a rotary actuator rotatably mounted on said frame on a stationary axis of rotation; indexing means moveably mounted on said frame to move in four directions relative thereto; two of said four directions being substantially at right angles to two of the remaining directions; said indexing means having a generally rectangular array of indexing portions; said indexing portions being spaced generally equally relative to each other and disposed in rows; said rows having adjacent respective opposite ends, said rows being substantially straight and said rows being spaced apart from each other substantially equal distances; lateral displacement means operable by said rotary actuator and at the ends of said rows; said lateral displacement means disposed to shift said indexing means in a direction laterally relative to said rows and to shift said indexing means a distance substantially equal to the distance between said rows; said lateral displacement means operable by a movement of said rotary actuator to an end of one of said rows; said rotary actuator having means disposed and adapted successively to

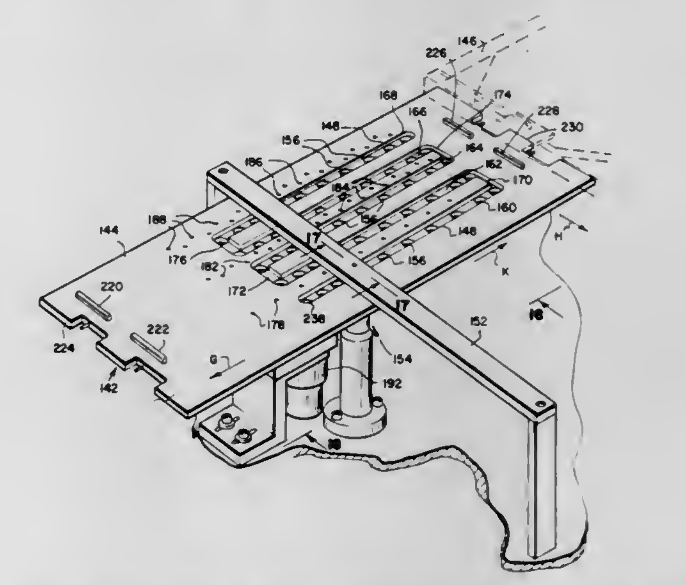

engage and move one of said indexing portions with each revolution of said rotary actuator; said rotary actuator disposed to move said indexing means a distance equal to the distance between said indexing portions; and a single revolution control means disposed and adapted to drive said rotary actuator one revolution at a time; the indexing portions of adjacent ones of said laterally spaced apart rows of said indexing portions being disposed substantially 180° out of phase with each other relative to said rotary actuator and thus disposed for engagement with said rotary actuator whereby said rotary actuator continually rotates in one direction and drives one of said rows rectilinearly in one direction and successively drives the adjacent row of indexing portions rectilinearly in the opposite direction each time said lateral displacement means shifts said indexing means laterally relative to said rows and from an end of one row to a respective end of said adjacent row.

4,061,233

DRILLING RIGS

Joseph Reginald Benjamin, Fifth Floor, 38 Savile Row, London, W1X 2QU, England

Filed June 28, 1976, Ser. No. 700,478

Claims priority, application United Kingdom, July 4, 1975, 28401/75

Int. Cl.² E21B *19/14*

U.S. Cl. 214—2.5 6 Claims

1. A drilling apparatus comprising, in combination
a. a pile having an axis inclined to the vertical in a plane of inclination;
b. a drill string within said pile;
c. a frame mounted on said pile;
d. a derrick having a foot end and a head end, said foot end pivotally mounted to said frame for angular movement of said derrick in said plane of inclination;
e. drill stem storage means having access means positioned angularly below said pile axis;
f. derrick adjustment means operable to move said derrick

head end between a position vertically above said access means and a position on said pile axis;

g. hoisting means on said derrick operable to transfer drill stem from said storage means to said pile with the lower end of said drill stem always positioned in the space angularly below said pile axis; and

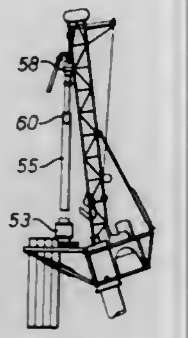

h. winch means on said derrick intermediate said head and said foot end, said winch means having flexible hauling means engageable with said drill stem during transfer by said hoisting means to control movement of the lower end thereof between said storage means and said pile.

4,061,234

APPARATUS FOR ASSEMBLING MULTI-LAYER GROUPS OF CIGARETTES OR THE LIKE

Jürgen Bantien; Dietrich Bardenhagen; Johannes Mielke, and Friedel Kruse, all of Hamburg, Germany, assignors to Hauni-Werke Korber & Co., KG, Hamburg, Germany

Filed Sept. 23, 1974, Ser. No. 508,392

Claims priority, application Germany, Sept. 22, 1973, 2347781

Int. Cl.² B65B *19/10*

U.S. Cl. 214—6 M **12 Claims**

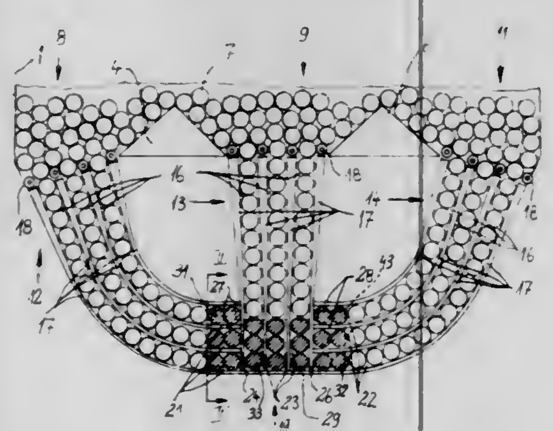

1. Apparatus for assembling multi-layer blocks consisting of predetermined numbers of cigarettes or analogous rod-shaped articles, particularly for arraying rod-shaped articles in the form of blocks which are ready for packing, comprising a magazine for a supply of parallel rod-shaped articles; first and second article feeding means respectively including a first and a second group of ducts having inlets communicating with said magazine and end portions remote from and located at a level below said inlets so that each of said ducts slopes downwardly, at least in part, intermediate said inlet and said end portion thereof to allow the articles of said supply to descend therein by moving sideways and to form in the respective end portion a row of adjacent parallel articles, said end portions of said first group of ducts being spaced apart from said end portions of said second group of ducts; and third article feeding means including at least one additional duct having an inlet communicating with said magazine and an end portion located at a level below said last mentioned inlet, the end portion of said additional duct being disposed between and being inclined with respect to the end portions of said first and second groups of ducts and the articles which enter the inlet of said additional duct and descend therein by moving sideways forming in said end portion of said additional duct an additional row of parallel articles; and means for expelling the rows of articles from said end portions at such intervals that said end portions are refilled with rows of articles between successive expulsions, said expelled rows forming a block or rod-shaped articles.

4,061,235

VEHICLE WITH SIDE DUMPING MECHANISM OVER THE TOP RAIL

Diego Rolando Suarez, Coral Gables, Fla., assignor to Inter-American Transport Equipment Company, Miami, Fla.

Filed Dec. 16, 1976, Ser. No. 751,191

Int. Cl.² B65G *67/24*

U.S. Cl. 214—64 **11 Claims**

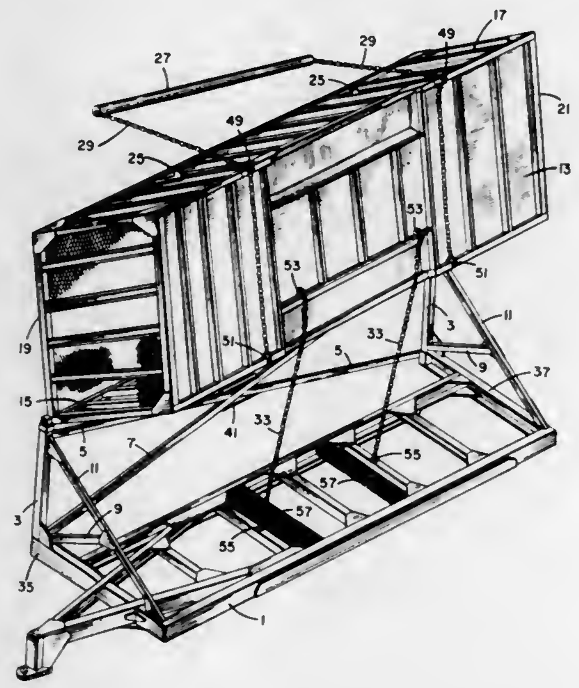

1. A side dumping container vehicle comprising:

a. a chassis having front, rear and side portions;

b. a pair of side dumping arms each connected to the front and rear portions of the chassis near one side portion of said chassis,

c. means for reinforcing said pair of side dumping arms to said chassis,

d. a rigid container comprising a base, a side dumping siding forming one side of the container, front and rear sidings, and a lifting siding forming a side of the container opposite the side dumping siding, wherein said container is supported by said chassis with the side dumping siding adjacent said pair of side dumping arms,

e. pivot means for pivotally connecting said side dumping siding of said container to said pair of side dumping arms,

f. supporting means for supporting a lifting bar mounted on said lifting siding, said supporting means comprises a pair of hook shaped members attached to said lifting siding near the top of said lifting siding,

g. a lifting bar adapted to be supported by said supporting means, said lifting bar comprises an elongated bar having a length greater than the distance between said pair of hook shaped members so as to be received and supported by said hook shaped members, and adapted to be lifted from said hooked shaped members by a lifting device,

h. means for interconnecting said lifting bar to said container, whereby movement of said lifting bar away from said supporting means pivots said container about said pivot means for dumping the contents of said container, wherein said means for interconnecting said lifting bar to said container comprises plural cable means being connected at one end to said lifting bar and being connected at its other end to said container, and

i. limiting means for limiting the pivotal movement of said container during dumping.

4,061,236

APPARATUS FOR REMOVING DRINKING STRAWS FROM BOTTLES

Moshe Schneerson, 189a Assirey Zion St., Kiryat Sharet, Raanana, Israel

Filed May 12, 1976, Ser. No. 685,795

Int. Cl.² B65B *21/18*

U.S. Cl. 214—309 **13 Claims**

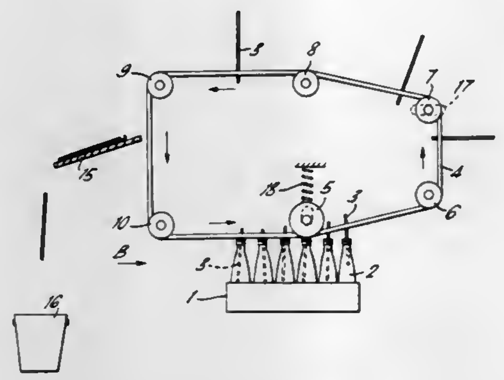

1. An apparatus for removing projecting drinking straws from empty bottles comprising:

a. a supporting frame structure,

b. a conveyor for the bottles either in a case or individually,

c. at least one pair of endless straw-gripping belts adapted for movement above said conveyor,

d. a plurality of spaced pairs of pulleys mounted at predetermined position on said frame structure for guiding said belts over a series of stretches as follows:

i. a straw-gripping stretch which extends generally parallel relative the bottle conveyor and in which said belts approach each other closely as they approach the top of the bottles whereby the belts clamp said projecting straws between them;

ii. a straw-removing stretch which extends generally upwardly relative the bottle conveyor and in which said belts move together in close juxtaposition and remove said straws from said bottles;

iii. a straw-holding stretch which extends generally normal to and then substantially parallel to the bottle conveyor and in which the belts are close together and hold said straws between them, and

iv. a straw-ejecting stretch which extends generally normal relative the bottle conveyor and in which said belts are separated to release said straws;

e. means to separate said belts in said last-mentioned stretch, said last-mentioned stretch joining at its end with the beginning of the first-mentioned stretch.

4,061,237

FORKLIFT TRUCK

Stephen R. Austin, Winnetka, and George J. Stevenson, Wilmette, both of Ill., assignors to The Brevet Corporation, Glenview, Ill.

Filed July 10, 1975, Ser. No. 594,634

Int. Cl.² B60P *1/64*

U.S. Cl. 214—515 **33 Claims**

1. In apparatus for storing a mobile forklift truck on top of a raised platform, such as a loading dock or the platform bed of a conventional motor truck, said forklift truck including a frame assembly comprising a horizontal base member with a vertical frame member mounted thereon, main support wheel means and drive wheel means carried by said frame assembly to move the forklift truck about in use, a fork with a pair of generally horizontal tines mounted on said vertical frame member at the front end thereof, lifting means for raising and lowering said fork tines on said vertical frame member, and drive means for actuating said lifting means to raise and lower said fork selectively, said forklift truck being collapsible from an operative condition in which said main support wheel means projects forward beyond said vertical frame member to a storage condition in which said main support wheel means is located substantially entirely behind the forwardmost portion of said vertical frame member and said tine lifting means, the improvement which comprises:

a pair of stirrups mounted on top of said raised platform adapted to receive said tines, each of said stirrups being spaced from the edge of said platform a distance that is less than the distance to which said tines extend beyond the forwardmost portion of said vertical frame member, said tine lifting means, and said main wheel support means when the forklift truck is in its said collapsed condition; and

a collapsible support arm mounted on said raised platform movable between an out-of-the-way position and an operative position in which it is substantially level with the top of said platform,

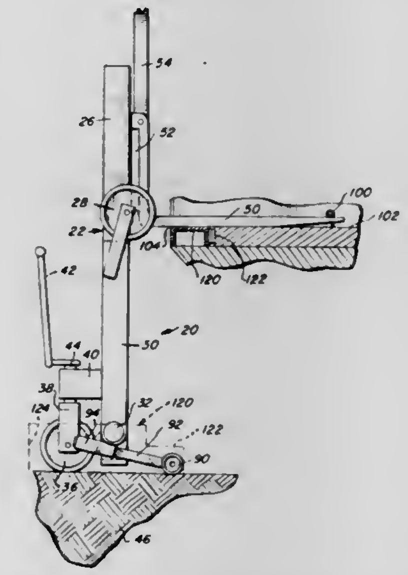

whereby when said fork tines are positioned in said stirrups, said forklift truck is put into its said storage condition, said fork tines are lowered far enough with respect to said vertical frame member that said frame assembly with said drive wheel means is raised to the level of said platform top, and said collapsible support arm is moved into its operative position where it engages the rearmost wheel means carried by said frame assembly, actuating said drive wheel means in contact with one of said support arm and said raised platform will then cause the forklift truck to move forward upon the platform until said tines are fully inserted in their respective stirrups and said forklift truck is positioned entirely within said platform edge.

4,061,238

LOAD CARRYING FORK FOR AN INDUSTRIAL VEHICLE

William L. Cunningham, and Duane W. Graham, both of Portland, Oreg., assignors to Hyster Company, Portland, Oreg.

Filed Nov. 20, 1975, Ser. No. 633,828

Int. Cl.² B66F *9/14*

U.S. Cl. 214—750 **1 Claim**

1. A load carrying fork for use with an industrial vehicle comprising:

an L shaped member having a vertical shank and a horizontal shank, said shanks each having load engaging surfaces;

means on the upper end of the vertical shank for attaching the fork to the vehicle;

a generally cylindrical groove extending transverse to the longitudinal central axis of the horizontal shank and located at the intersect of the vertical and horizontal shanks, the groove having a first end, a second end and a center, the groove further having a longitudinal central axis defined by a straight line, said groove central axis being normal to the longitudinal central axis to the horizontal shank, the groove defining an undercut below the load engaging surfaces of the vertical and horizontal shanks, said intersect further defining the heel of the fork;

the perpendicular distance from the bottom of the horizontal shank to

the surface of said center of said groove defining the thickness of said heel, the radius of curvature of said groove at said center being greater than at said first and second end of said cylindrical groove;

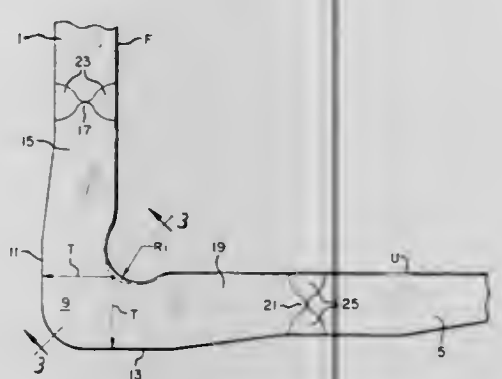

and the ratio of the radius of curvature of the groove at the groove center to the heel thickness having a value in the range substantially from 0.25 to 1.0 so that stresses in the intersect are reduced.

4,061,239
CLOSURE FOR A CONTAINER
Frans A. W. Tasseron, Heemstede, Netherlands, assignor to Koninklijke Emballage Industrie Van Leer B.V., Amstelveen, Netherlands
Filed Dec. 10, 1976, Ser. No. 749,515
Claims priority, application Netherlands, Dec. 12, 1975, 7514516
Int. Cl.² B65D *55/02, 85/56;* **A61J** *1/00*
U.S. Cl. 215—221 **2 Claims**

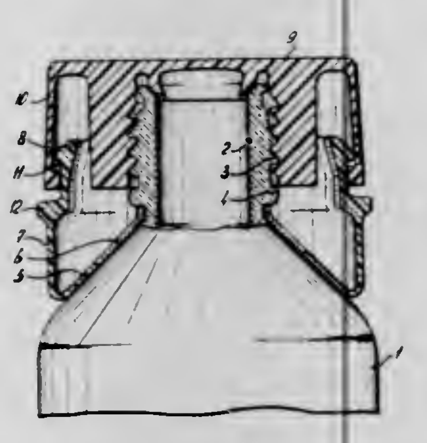

1. In a closure for a container having a neck provided with screw threads formed on the exterior surface of said neck and a cap screwed on said neck, said cap in its closure position engaging an annular body which is locked in a groove of the neck beneath the screw thread thereof, the improvement comprising the cap having a wall, said wall with the threaded part of the cap constituting an inverted U-shaped hollow space, said wall having an inwardly facing edge, and the annular body having an upwardly directed flexible wall, said wall projecting into the U-shaped hollow space and having a plurality of outwardly extending hooks engaging with the inwardly directed edge of said wall.

4,061,240
CLOSURE CAP AND CONTAINER
Thomas Duncan Brownbill, London, England, assignor to John Dale Limited, London, England
Filed June 14, 1976, Ser. No. 695,446
Claims priority, application United Kingdom, June 13, 1975, 25389/75; July 4, 1975, 28289/75; Aug. 13, 1975, 33745/75
Int. Cl.² B65D *53/00*
U.S. Cl. 215—270 **6 Claims**

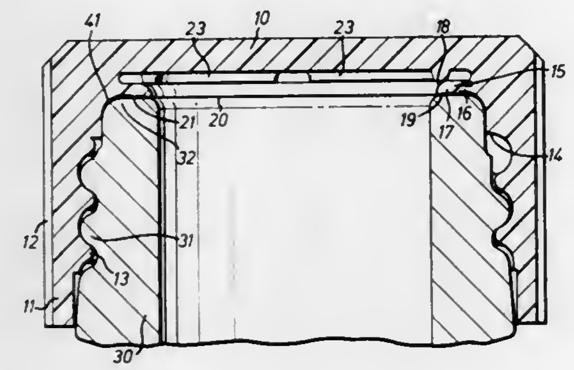

1. A closure cap in combination with a container which has a neck provided with a dispensing opening, said cap comprising
- a crown and an annular skirt depending from the crown, means on the skirt securing the cap to the container neck with the crown disposed across said opening,
- a flexible annular sealing ring integral with the cap and inclined inwardly towards the axis of the cap, said ring having an annular extremity in sealing contact with the top of said container around said opening, and
- a segmented support ring disposed on the crown within the space between the sealing ring and the inner surface of the crown whereby the sealing ring is pressed thereagainst when the sealing ring engages the container, said segmented ring permitting fluid under pressure to escape from the container into the space between the sealing ring and the crown where it is confined and urges the sealing ring against the container.

4,061,241
FOOD PLATE PACKAGE
Andrew G. Retelny, Wheaton, Ill., assignor to McDonald's Corporation, Oak Brook, Ill.
Filed Sept. 27, 1976, Ser. No. 727,293
Int. Cl.² B65D *1/34, 43/10;* **A45C** *11/20*
U.S. Cl. 220—4 B **9 Claims**

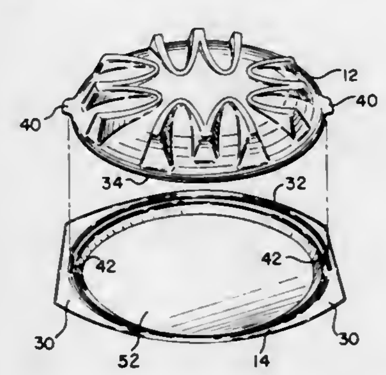

1. A package of lightweight thermoplastic material for use in the storage of heated foods, said package being effective to maintain the heat and flavor of hot food contained therein, said lightweight thermoplastic material normally deforming if a wall of said package reaches the temperature of said hot foods, as occurs when adjacent packages are stacked on each other without provision for the circulation of cooling air between said adjacent packages, said package comprising in combination, a plate, said plate being shaped to receive heated foods, a generally bowl-shaped cover adapted to cover said plate to maintain said foods in a heated condition, a plurality of ribs formed on an outside surface of said cover and being spaced each from the other, each of said ribs being raised from said outside surface to form a planar upper surface, each of said planar upper surfaces of said plurality of ribs cooperating to form a substantially horizontal upwardly facing support surface to receive a plate of a similar package, each of said ribs having at least one generally U-shaped portion to form a bight, the bight of each of said U-shaped ribs generally extending toward the center of said cover from a point in close proximity to the periphery of said cover, the spacing between each of said ribs defining a channel directed toward the center of said cover to allow passage of cooling air over said cover and under the plate of a vertically adjacent package to maintain the temperature of the outside surface of said cover below that of the food contained therein, thereby preventing deformation of said cover due to excessive heat while maintaining said foods at a temperature suitable for consumption and simultaneously providing substantially rigid support for a stack of packages.

4,061,242
DRIPLESS PAINT CONTAINER
Joseph J. Donlon, 1240 Dauphine St., New Orleans, La. 70116
Filed Aug. 11, 1976, Ser. No. 713,446
Int. Cl.² B65D *1/36, 23/08, 25/28*
U.S. Cl. 220—90 **9 Claims**

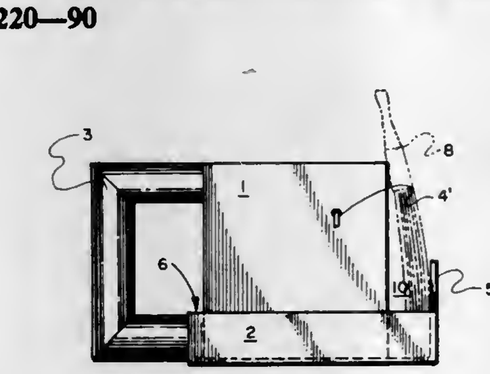

1. A dripless paint container, comprising:
- a. a rectangular drip catching pan having a closed bottom and sidewalls; and
- b. rectangular holding means for holding paint having a closed bottom and side walls, said holding means being, mounted within said drip catching pan, the side walls of said holding means spaced from the side walls of said drip catching pan, the central and vertical, longitudinal axis of said holding means offset from but parallel to the central and vertical, longitudinal axis of said drip catching pan, said holding means having horizontal cross-sectional dimensions smaller than the cross-sectional dimensions of said drip catching pan, said drip catching pan providing an offset drip catching surface completely surrounding said holding means.

4,061,243
END CLOSURE WITH VARIABLE SIZE POUR OPENING
Nick S. Khoury, Worth, Ill., assignor to The Continental Group, Inc., New York, N.Y.
Filed Nov. 2, 1976, Ser. No. 737,960
Int. Cl.² B65D *41/32*
U.S. Cl. 220—269 **9 Claims**

1. An easy-opening end closure for a can or similar container, arranged and adapted to permit a selection from among a succession of increasingly sized pour opening, said closure comprising an end panel, a score line formed in said end panel and defining therein an openable flap, an opening member attached to said end panel and adapted to rupture said score line and open said flap consequent to a displacement of said member, and means included in said end panel and co-operative with said opening member to progressively vary the force required to open the closure, said force varying means comprising at least one portion of said end panel, exclusive of said openable flap, disposed in obstructing relation to said opening member and limiting rupture of said score line to a predetermined portion thereof, said end panel portion being deflectable to a non-obstructing position upon application of a predeter-

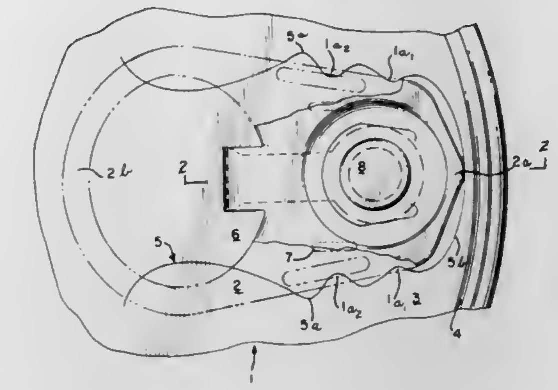

mined force thereagainst, whereby said score line may be ruptured beyond said predetermined portion thereof.

4,061,244
COMBINATION CONTAINER WITH REMOVABLE CLOSURE
John A. Tucker, 14745 Erwin St., Van Nuys, Calif. 91411
Filed Nov. 19, 1976, Ser. No. 743,330
Int. Cl.² B65D *41/10*
U.S. Cl. 220—310 **4 Claims**

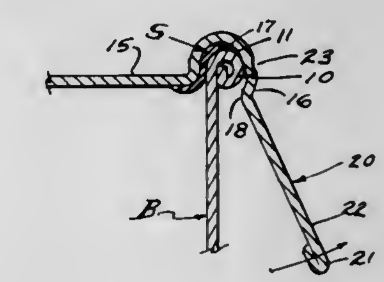

1. A container and removable interlocked closure of circular form; the container being comprised of a base and an upstanding perimeter wall defining an open topped fluid tight vessel, a circumferential and outwardly disposed peripheral bead in a normal plane at the open top of the container, the closure being comprised of a wall engaged with the bead and a rim circumferentially coextensive with and conforming to said bead and with a ridge continuously underlying the said bead to interlock therewith, seal means disposed between the closure wall and the bead, and a circumferentially continuous conical skirt depending divergently from the said ridge and presenting a manually engageable edge remote from the rim for outward upward deflection deforming the rim and causing it to revolve the ridge outward from the bead in opposite circumferential directions from any point of deflection to thereby release the closure from the container.

4,061,245
HELICAL COIL DISPENSING MACHINE APPARATUS
Joseph A. Lotspeich, Eagen, Minn., assignor to Gross-Given Manufacturing Company, St. Paul, Minn.
Filed Mar. 22, 1976, Ser. No. 669,348
Int. Cl.² G07F *11/36*
U.S. Cl. 221—75 **26 Claims**

1. Mounting apparatus for an elongate helical coil of the type used in dispensing machines, comprising:
- a. an elongate helical coil having a longitudinally extending coil axis and defining an internal cylindrical zone coaxial with said coil axis;
- b. a cross-bracket member mounted to one end of said coil, having a portion thereof disposed across the diameter of said coil; and
- c. cross-bracket holding means cooperatively detachably engaging said cross-bracket member for detachably rotat-

ably mounting said coil in quick-release manner for rotation about said coil axis, such that said axis is generally disposed in a horizontal plane, whereby said internal cylindrical zone of the mounted coil is free of obstruction along the longitudinal length of said coil wherein said cross-bracket holding means comprises a stationary housing member; a rotatable member mounted to said stationary housing member and rotatable about a generally horizontally disposed axis, said rotatable housing member comprising a cross-bracket holding device having a recessed channel sized to matingly engage said cross-bracket member, for imparting rotary motion thereto and

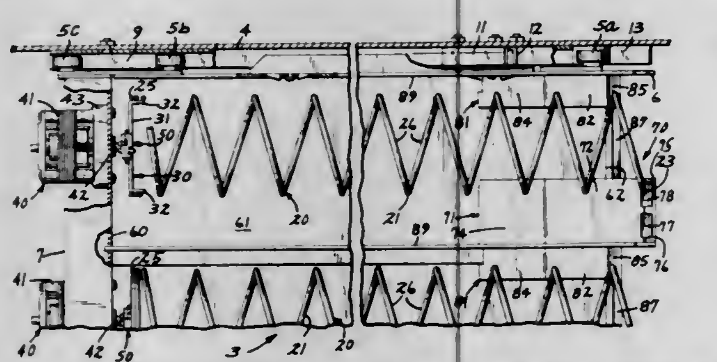

retaining means mounted for rotation with said rotatable housing member, for releasably securing in quick-release manner said cross-bracket member into cooperative engagement with said recessed channel in said cross-bracket holding device, wherein said retaining means comprises a plurality of retaining clips, positioned on opposite sides of said channel and being operable between first and second positions, said retaining clips being normally biased toward said first position to retainably engage said cross-bracket member within said channel and being movable to said second position for releasing and for accepting said cross-bracket member from and into retention within said channel.

4,061,246

CONTROLLED FEEDING OF POWDERS TO CONVEYING SYSTEMS AND PROCESS

Frank J. Miksitz, Phillipsburg, N.J., assignor to UFI Engineering & Manufacturing Co., Inc., Bethlehem, Pa.

Continuation-in-part of Ser. No. 563,453, March 31, 1975, Pat. No. 4,015,747, which is a continuation-in-part of Ser. No. 467,558, May 6, 1974, Pat. No. 3,874,566, which is a continuation-in-part of Ser. No. 216,105, Jan. 7, 1972, Pat. No. 3,809,286. This application July 16, 1975, Ser. No. 596,430

Int. Cl.² B65G *65/34*

U.S. Cl. 222—1 **9 Claims**

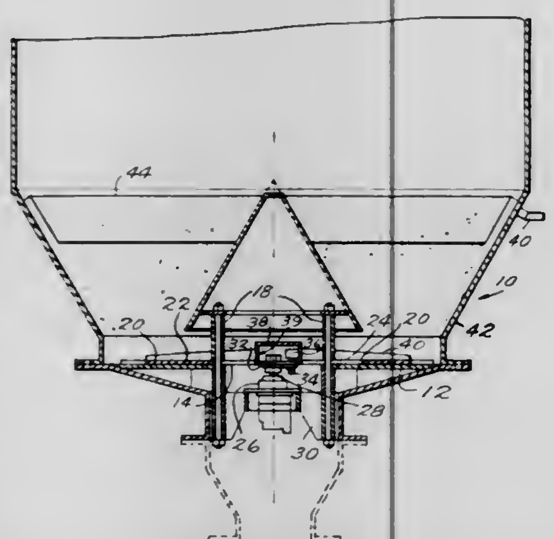

1. A method for feeding finely divided powdered material from a mass of the powder maintained in an upper zone downwardly into a lower zone by gravity assist through a feed device which mechanically urges a stream of the powder through a feed aperture at a controlled rate, said method comprising providing a shroud within the powder in the upper zone, disposing a horizontal annular plate below the shroud with powder in the form of an annular mass thereof residing on the upper surface of the plate, injecting a gas upwardly into the mass of material at a location above the shroud to agitate the powder to render it free flowing by gravity while maintaining at the annular plate a stable mass of the powder, and orbiting the plate in a horizontal plane thereby urging powder only from the stable mass thereof inwardly toward and through the aperture in the plate along a path which moves in a horizontal plane around the periphery of the aperture in the plate, whereby the injected gas does not cause uncontrollable delivery of fluidized powder to the plate and whereby the plate maintains control over the rate at which the powder flows through the feed aperture.

4,061,247

METHOD OF AND APPARATUS FOR CONTROLLING OF TRAVEL OF THE PLUNGER IN A DISPENSING PUMP CHAMBER

Philip Meshberg, 85 Old Oaks Road, Fairfield, Conn. 06430

Continuation-in-part of Ser. No. 339,129, March 8, 1973, abandoned. This application Nov. 20, 1975, Ser. No. 633,798

Int. Cl.² G01F *11/38*

U.S. Cl. 222—1 **6 Claims**

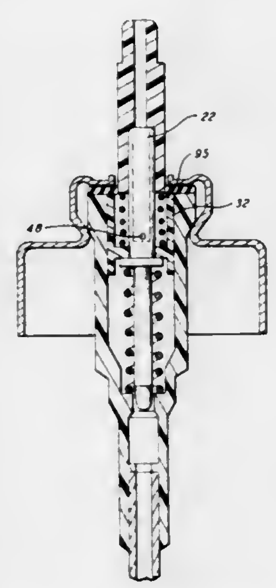

1. In a finger operated pump for dispensing material from a container, said pump including a pump chamber, a cylindrical piston member having at least one horizontal cross-sectional portion with a central opening therein, disposed in said chamber for movement therein, a stem for moving said piston member downward having a discharge channel therein comprising a first upper portion of first outer diameter larger than said opening and a second portion of an outer diameter slightly smaller than said opening inserted through said opening, a stop at the bottom of said second portion of a size larger than said opening abutting against said horizontal portion when said pump is unoperated; a first spring acting against said stop and biasing said piston upward; first valve means at the bottom of said chamber for establishing communication between said chamber and the material to be dispensed in the container, said first valve arragned to close on initial actuation of said stem, and second valve means for establishing communcation between said chamber and said discharge channel in said stem, said second valve means being formed by cooperating portions of said second stem portion and said horizontal portion, said second valve means operable to establish communication between said channel and said chamber only after a predetermined movement of said stem downward, a method of improving the evenness of dispensing comprising interposing a second spring between said first stem portion and the top of said horizontal portion whereby during the initial actuation when said first valve is closed and said second valve opened said spring will be compressed prior to opening of said second valve and store energy to create a prepressurization in the stem mechanism which will result in smooth dispensing even if the stem is not smoothly actuated.

4,061,248

MULTI-FLAVOR WHIP CREAM APPARATUS

Vincent Arena, R.R. No. 1, Box 82A-3, Stockholm, N.J. 07460

Filed Sept. 7, 1976, Ser. No. 721,313

Int. Cl.² B67D *3/00*

U.S. Cl. 222—4 **2 Claims**

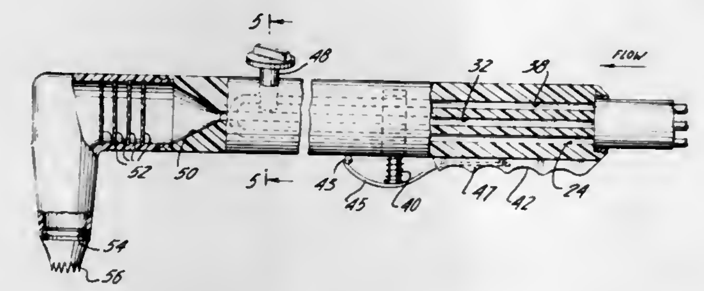

1. An apparatus for the mixing and dispensing of a plurality of flowable, aerated, comestible materials, comprising:

a. an elongated handle element having therein three longitudinal channels, and an output nozzle located on one end thereof, two of said channels providing, respectively a liquid and a gas, each of said channels extending substantially throughout the length of said handle element and corresponding to one component of said materials to be mixed, said handle element also including a first transverse bore located distal to said nozzle and a second transverse bore located proximal to said nozzle, said first bore positioned in contact with all of said channels and said second bore positioned in contact with only said liquid providing channel,

b. a plunger positioned in said first bore having a plurality of transverse channels, said channels corresponding in position and cross-section to said longitudinal channels of said handle element, said plunger also including a biasing means externally mounted about said plunger and protruding from said handle element, wherein a selectable open-close function of said channels is obtained through the application of external pressure to said biasing means;

c. an overrun control valve having a channel corresponding in position and cross-section to said liquid-containing channel, said valve disposed within said second transverse bore wherein, upon rotation of said valve, the ratio of gas to liquid and, thereby, the consistency of the end-product can be regulated; and

d. a blending area located intermediate said channels and said nozzle, said blending area comprising a singular channel axially integral with said longitudinal channels and providing the junction thereof, and a conically diverging, increased diameter expansion chamber integral with said singular channel, said expansion chamber promoting the homogeneous mixture of said materials

---

4,061,249

AEROSOL DISPENSER RING

Dale Maxwell Smith, 99 Copeland Road, NE., No. D-16, Atlanta, Ga. 30342

Filed Jan. 26, 1976, Ser. No. 652,215

Int. Cl.² B65D *83/14;* **E05G** *1/12*

U.S. Cl. 222—78 **5 Claims**

5. A dispenser ring for dispensing aerosol adapted to be worn on the hand of the user comprising:

a ring band adapted to fit on the finger of the user's hand;

a mounting on said ring band;

a dispenser assembly carried by said mounting, said dispenser assembly including an aerosol reservoir, a supply of aerosol carried in said aerosol reservoir under pressure; a discharge valve assembly communicating with said supply of aerosol in said reservoir to selectively discharge the aerosol when said valve assembly is activated, a camouflaging member substantially covering said aerosol reservoir and said discharge valve assembly to camouflage same; and trigger means for selectively activating said valve assembly; said trigger means pivotally mounted

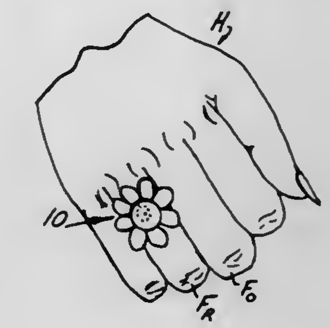

adjacent said reservoir and including an operating element projecting out from said camouflaging member to be manually engaged by the user to activate said valve assembly.

4,061,250

DEPRESS BUTTON TYPE SPRAYER

Tetsuya Tada, 2-6, 3-chome, Nishinakanobu, Shinagawa, Tokyo, Japan

Filed May 25, 1976, Ser. No. 689,750

Claims priority, application Japan, May 31, 1975, 50-65533; Nov. 26, 1975, 50-160023[U]

Int. Cl.² B05B *9/043*

U.S. Cl. 222—321 **9 Claims**

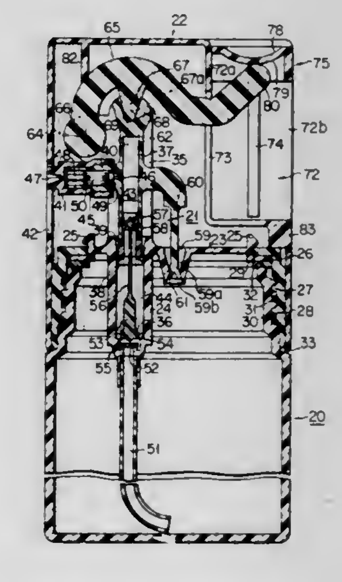

1. A depress button sprayer comprising:

a spray body provided with a cylinder having an opening at one end;

a piston slidably mounted in a liquid-tight fashion in the cylinder;

spring means for urging the piston outwardly of the cylinder;

a nozzle in communication with the cylinder and having a dispensing hole for jetting a liquid from within the cylinder;

a pivotable lever coupled to the piston for sliding the piston into the cylinder against the force of the spring means, the lever having a rounded free end;

a pivot for pivotally supporting the lever in a position spaced from the axis of the piston;

a cap housing for covering the spray body and the lever, the cap housing having a longitudinally extending recess at the rear upper portion thereof; and

a depress button slidably received in the recess and drivingly point-contacted with the rounded free end of the lever.

4,061,251
METERED VALVE ASSEMBLY FOR DISPENSING DEVICES
Arthur M. Harris, c/o S.G. Militana, 9301 NE. 6th Ave., Miami Shores, Fla. 33138
Continuation-in-part of Ser. No. 396,122, Sept. 10, 1973, abandoned. This application Sept. 10, 1973, Ser. No. 396,123
Int. Cl.^{2} B65D *83/14;* **G01F** *11/28*
U.S. Cl. 222—402.2 **3 Claims**

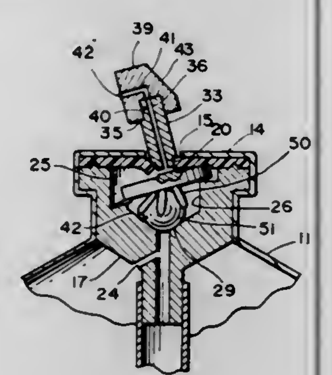

1. In a receptacle for pressurized liquid having a cap portion, a resilient valve seat adjacent said cap portion, a rigid valve disc in contact relation with said resilient valve seat, an opening in said cap and said resilient valve seat for the passage of liquid under pressure from said receptacle, a valve housing mounted in said receptacle, said housing having a chamber, a second valve seat and an inclined shoulder, said valve disc engaging said shoulder at the highermost position as a fulcrum, a valve stem secured to said valve disc extending upwardly through said openings, an actuator mounted on said valve stem, said actuator having a discharge outlet and a thumb receiving surface on opposite sides thereof, said outlet, said thumb receiving surface and said fulcrum being in substantial coplanar relation, a duct extending axially of said valve stem communicating with said outlet and terminating adjacent said valve disc, a further duct extending radially of said valve stem connecting said first named duct and engaging said resilient valve seat at said opening when said valve disc is in a closed position, a check valve positioned in said valve chamber on said second valve seat and a plurality of elongated and substantially resilient members extending from said rigid valve disc engaging said check valve and yieldingly maintaining said check valve on said seat.

4,061,252
AEROSOL DISPENSER USING BUTANE PROPELLANT
Pasquale R. Riccio, Salem, N.H., assignor to Ciba-Geigy Corporation, Ardsley, N.Y.
Filed Mar. 9, 1976, Ser. No. 665,313
Int. Cl.^{2} B65D *83/14;* **F16K** *31/58*
U.S. Cl. 222—402.18 **6 Claims**

1. A dispensing means for a butane aerosol dispenser, comprising a hollow support, a dip tube depending from the central portion of the bottom of the support and opening into the interior of the support, the bottom surface of said support having at lease one propellant inlet aperture at the periphery thereof, a pushbutton having a depending sleeve with the lower end movable into and out of the support, nozzle means in said pushbutton, said pushbutton having a supply passage from the interior of said sleeve to said nozzle means, said support and sleeve having a mixture flow path therethrough and gasket means in said flow path for opening said flow path when said sleeve is moved into said support, and annular passage defining means along said flow path in said support and

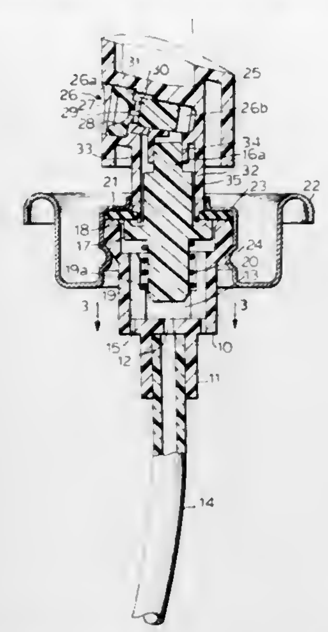

sleeve for defining an elongated annular passage for expansion of the butane propellant as it passes along said flow path.

4,061,253
METERING DISPENSING BOTTLE
Winston C. Rockefeller, Woodcliff Lake, N.J., assignor to Colgate-Palmolive Company, New York, N.Y.
Filed Sept. 22, 1975, Ser. No. 615,865
Int. Cl.^{2} G01F *11/26*
U.S. Cl. 222—442 **10 Claims**

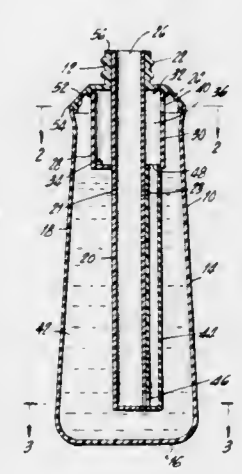

1. A container for the repetitive dispensing of substantially equal predetermined quantities of liquid comprising a first container having a bottom portion, sidewall portion and an open-ended neck portion, a second container disposed at least substantially within the first container and depending from the neck portion thereof comprising an elongated tubular member open ended at the upper extremity and closed at its bottom, a third-container disposed completely within said first container, integral with and disposed substantially concentrically around said second container to form an annular reservoir, said third container comprising sidewall, bottom and top portions which together form a fluid sealing enclosure, the top and bottom portions being integral with and supported by the outer surface of said second container, said third container communicating with said first container by means of an opening provided on the upper portion of said sidewall of said third container, said opening serving as a liquid inlet to said third container, and a second tubular member connecting the bottom portions of said second container with the bottom of said third container, and serving as a fluid passageway there between, said second tubular member having a volume substantially smaller than said third container whereby substantially the same quantity of liquid is repetively dispensed, and venting means for permitting air to escape from said third container, said venting means communicating with said first container and said third container through said second container and said second tubular member.

4,061,254
DISPENSING VALVE
Billy N. Nilson, Mjolby, Sweden, assignor to KeNova AB, Malmo, Sweden
Filed Apr. 1, 1975, Ser. No. 564,080
Claims priority, application Sweden, Apr. 8, 1974, 7404749; Nov. 20, 1974, 7414566
Int. Cl.^{2} B65D *5/72*
U.S. Cl. 222—494 **2 Claims**

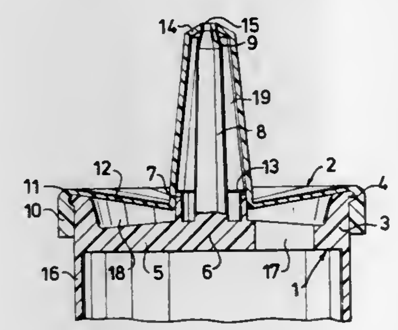

1. A self-resetting pressure release valve opening in response to a predetermined pressure and closing upon release of said pressure comprising:
an integral diaphragm mounted at its periphery and having a discharge opening therein;
stem means extending toward said opening, said stem means being unbiased and having a portion in direct frictional contact with said diaphragm in the closed position of the valve, said diaphragm having a flexible body portion inclined inwardly from its periphery toward said stem means when the valve is in its closed position and moving outwardly through a planar position in response to pressure thereon in the direction of discharge; and
means for disengaging said diaphragm from said portion of said stem means substantially as said body portion of said diaphragm moves through its planar position, wherein said stem means further includes a projection and a support for said projection, said support having an outer rim and being provided with apertures between the outer rim and the projection, and said disengaging means including an annular flange formed on said support and in engagement with said diaphragm to isolate said discharge opening from said support apertures when said valve is in the closed position, said flange coming out of engagement with said diaphragm upon movement of the diaphragm to the planar position.

4,061,255
DRIP CONTROLLING SPOUT
Thomas R. Davies, 2850 Mesa Verde Drive E., Costa Mesa, Calif. 92626
Filed Sept. 23, 1976, Ser. No. 725,791
Int. Cl.^{2} B65D *25/42*
U.S. Cl. 222—566 **11 Claims**

1. The improvement in a spout affixed to a container for dispensing liquid therefrom comprising:
a spout formed from a single conduit having a passage completely enclosed along the length thereof from the entrance to the exit and having a downwardly displaced exit opening, wherein the terminus of the leading edge projects below the terminus of the trailing edge and said passage at the exit opening is formed in conduit walls of substantially uniform thickness so that liquid flowing

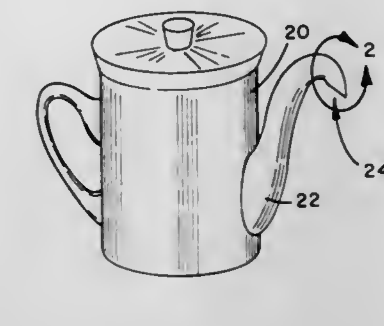

through said spout falls off the forward portion of the projecting rim provided by the leading edge.

4,061,256
TENNIS BALL HOLDER TO BE WORN ON THE ARM
Irwin B. Beer, 7717 SW. 102nd Place, Miami, Fla. 33173, and Sanford Siegal, 7720 SW. 102nd Place, Miami, Fla. 33143
Filed Aug. 7, 1975, Ser. No. 602,801
Int. Cl.^{2} A45C *11/00*
U.S. Cl. 224—5 D **4 Claims**

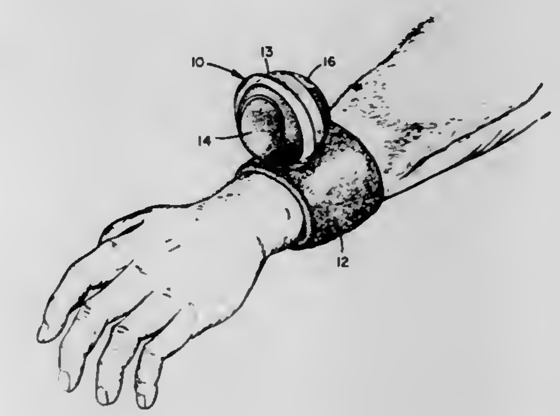

1. A holder for an object of relatively light weight and compact shape such as a tennis ball or the like, the holder adapted to be worn on the lower arm, comprising:
an elastic tube, fabricated of material containing a major element characterized by soft absorbency for comfort on the arm and absorbence of perspiration, and adaptable to be stretched over the hand and worn on the arm; and
a pouch attached to said elastic tube, said pouch including a substantially circular elastic band in relatively tangential attached position on said elastic tube for receiving and gripping the object to be held, and a shallow generally semi-circular loop of elastic material having its ends attached to said elastic band for supporting said object when in the pouch, and the width of the material of the loop being less than the diameter of said substantially circular elastic band for providing openings between the sides of said loop and said elastic band for application of pressure on the object in the removal of the object from the pouch,
the material of said elastic tube being of sufficient thickness and absorbency to deter the flow of perspiration therethrough to the object being held, and the elastic tube being of sufficient width to underlie the loop and cooperate therewith to prevent direct contact of the object with perspiration on the arm of the wearer.

4,061,257
CAR RACK FOR GOLF CARTS
Paul J. St. Clair, 737 Magnolia Ave., San Bruno, Calif. 94066
Filed July 16, 1976, Ser. No. 706,053
Int. Cl.^{2} B60R *11/00*
U.S. Cl. 224—42.08 **15 Claims**

1. An apparatus for carrying golf bags and attached carts on the rear of a vehicle, comprising:

a bumper frame oriented generally vertically, having a pair of spaced side arms extending upwardly;
means affixing the bumper frame to the rear bumper of the vehicle;
a lightweight elongated carrier rack having means for securely retaining at least one golf bag and attached cart to itself;
means pivotally connecting the carrier rack to the side arms of the bumper frame for rotation about a horizontal axis generally parallel to the rear bumper and located below the center of gravity of the rack and attached golf clubs and carts;
pad means mounted on the forward side of the carrier rack toward its upper end for resting upon the vehicle's rear deck when the rack is pivoted forward; and

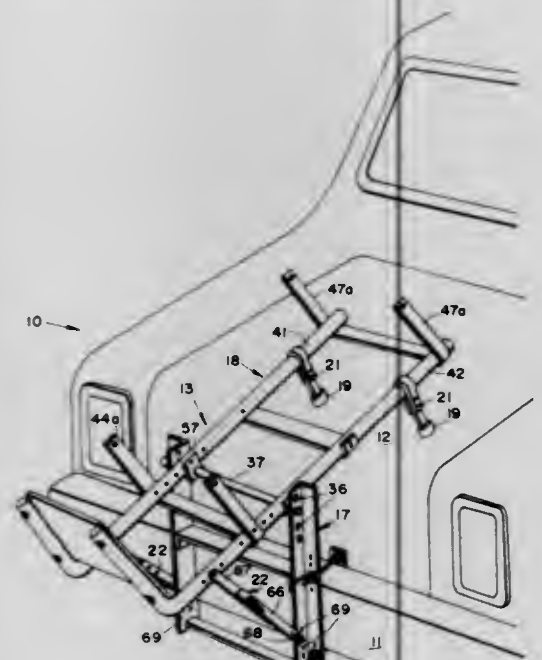

collapsible, quick-release compression brace means connected to the lower end of the carrier rack and to the lower part of the bumper frame, below said horizontal axis, for exerting an upward pushing force on the lower end of the rack so that the rack is tightly urged in the forward rotated direction to a forward position with the pad means tightly engaged against the vehicle rear deck, said compression brace means having a collapsed, relaxed position when said rack is in an upright position and an extended, locked compression position when said rack is in the forward position;
whereby the vehicle's rear deck may be raised and lowered with the carrier rack in the upright position, the golf clubs and carts may be easily loaded onto the carrier rack, and the loaded rack may be rotated to the forward position and locked to distribute weight between the bumper frame and the vehicle rear deck.

4,061,258
MOUNTING STRUCTURE FOR A VEHICLE ACCESSORY SUCH AS A CB RADIO OR THE LIKE
Charles E. Dysart, 3401 Caldwell Drive, Raleigh, N.C. 27600
Filed May 25, 1976, Ser. No. 689,746
Int. Cl.² B60R *11/02*
U.S. Cl. 224—42.42 R **6 Claims**

1. A support assembly for receiving and supporting an accessory such as a CB radio, AM-FM radio, tape or cassette recorder, or the like, wherein said support assembly is adapted to extend over a raised floor portion of a vehicle and to support said accessory such that the same may be readily detached from said support assembly, said support assembly comprising: a base support structure for extending over said raised floor portion of said vehicle and adapted to be securely clamped thereto, said base support structure comprising first and second base side members having outer end portions that terminate generally about respective lower side portions of said raised floor portion and inner ends that terminate in spaced apart relationship about a generally central portion of said floor portion, said first and second base side members including means for positively engaging said raised floor portion when said base support structure is placed over said raised floor portion; accessory support means integrally formed with said base and extending generally upwardly from said base support structure for supporting a particular accessory above said raised floor portion, said accessory support means including a pair of laterally spaced apart upstanding side support members extending generally upwardly from respective inner end portions of said first and second base side members and cross member means extending between said side support members and generally above said space defined between the inner ends of said base side members; said accessory support means including releasable securing means for receiving and holding

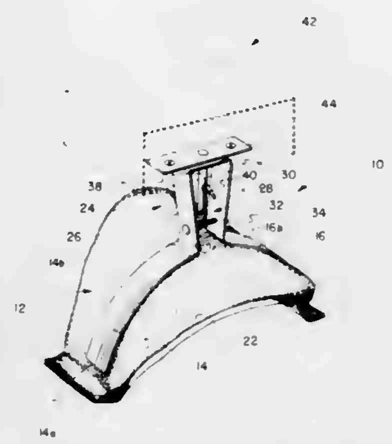

interconnecting attaching means extending from said particular accessory whereby said accessory may be readily and quickly attached and detached from said support assembly wherein a vehicle operator may protect against theft of the particular accessory by detaching and removing the accessory from said support assembly when leaving the vehicle unattended; and adjustment means transversely extending between said pair of laterally spaced apart support members of said accessory support means for adjusting the span between said first and second base side members such that by actuating said adjustment means said first and second base side members can be opened and closed about said raised floor portion such that when in a closed position said first and second base support members engage said raised floor portion and are firmly held thereabout by said positive engaging means associated therewith.

4,061,259
ADJUSTABLE CARRYING CASE SYSTEM
Billy L. Hurst, 1016 Marton St., Laurel, Md. 20810
Filed Sept. 29, 1976, Ser. No. 727,640
Int. Cl.² B65D *71/00*
U.S. Cl. 224—51 **8 Claims**

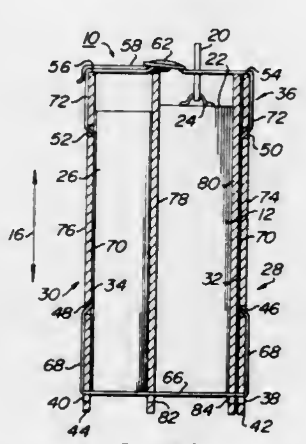

1. An adjustable carrying case system comprising:

a. at least one case having a handle member affixed to an upper surface of said case;
b. at least a pair of transversely displaced opposing planar members being separate and distinct each from the other, said case being insertable between opposing internal surfaces of said planar members, said opposing planar members including (1) at least a first through passage aligned each to the other adjacent a lower surface of each of said planar members, (2) at least a second transversely directed through passage formed at a vertical intermediate location of said planar members, (3) at least a third through opening formed adjacent an upper surface of said planar members; and,
c. means for simultaneously releasably capturing and supporting said case between said opposing planar members and said capturing and supporting means, said capturing and supporting means passing through each of said passages and said opening.

4,061,260
BAG MAKING MACHINE
Robert M. Copp, 271 Thames St., Bristol, R.I. 02809
Filed Mar. 29, 1976, Ser. No. 671,263
Int. Cl.² B65H *17/26*
U.S. Cl. 226—139 **1 Claim**

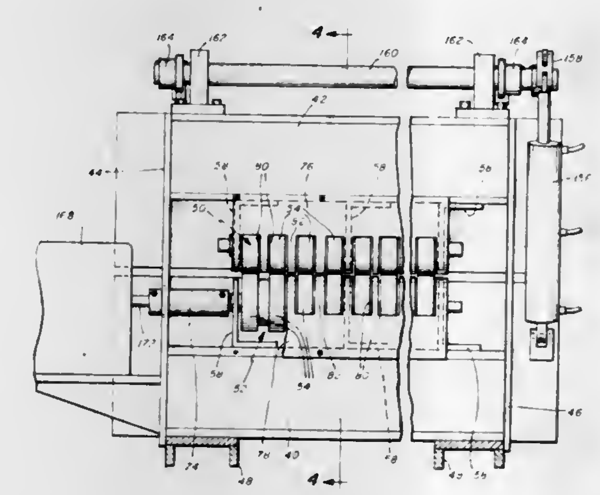

1. A feeding mechanism for advancing a web of thin, flexible sheet material, the feeding mechanism including a frame and a pair of feed rolls mounted to the frame for rotation about parallel axes, said mechanism comprising:
a plurality of thin walled, enlarged large diameter cylinders;
said cylinders being mounted coaxially and in spaced relation to each other;
a plurality of connective shaft segments extending between the adjacent ends of adjacent cylinders and to the outer ends of the outermost cylinders and being secured rigidly to said ends of said cylinders, said connective shaft segments being of relatively small diameter and being substantially shorter than their associated cylinders;
bearing means mounted to the frame to rotatably support each of the conductive shaft segments;
said feed rolls being mounted with respect to each other so that the outermost surfaces of the cylinders of one feed roll cooperate with the corresponding outermost surfaces of the cylinders on the other feed roll to define a nip line to grip and advance the web in response to rotation of one of said feed rolls;
a rotary fluid motor connected to the connective shaft of one of the rolls;
a pump;
a valve for controlling the rate of liquid flow from the pump to the motor;
a stepping motor for operating the valve; and
feedback means from the fluid motor to the valve and being response to termination of operation of the stepping motor to shut the valve and thereby stop the fluid motor.

4,061,261
DEVICE FOR PERFORMING WORKING OPERATIONS ON A WORKPIECE BY DETONATION OF BLASTING CHARGES
Rune Östen Walter Fredriksson; Johan Ingvar Johansson, both of Avesta, and Erhard Rudolf Boye, Gunnebobruk, all of Sweden, assignors to Avesta Jernverks Aktiebolag, Avesta, Sweden
Filed Nov. 25, 1974, Ser. No. 527,037
Claims priority, application Sweden, Nov. 28, 1973, 7316094
Int. Cl.² B23K *21/00*
U.S. Cl. 228—2.5 **18 Claims**

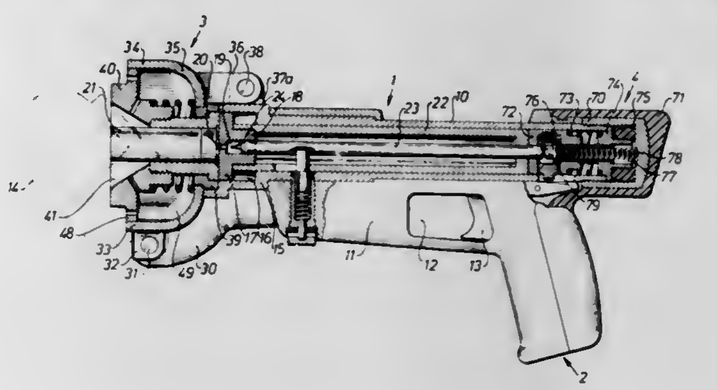

1. A hand-operated portable tool for carrying out working operations on a workpiece directly by blasting action produced by detonation of an explosive cartridge, comprising: a tool body; a front unit means, supported by said tool body, for engagement with the workpiece; and rear unit means supported by said tool body; said front unit means including means, movable towards said rear unit means into a retracted position against the action of a resilient means, for accommodating a prefabricated explosive cartridge in a position in which the front end of said cartridge is situated near the front end of said front unit means; said rear unit means including an igniting means for the explosive cartridge, said igniting means being releasable only in the retracted position of said front unit means; and said tool body including a first handle having first manually operable means for releasing said igniting means, a security means having an operative position in which to render said igniting means inoperative; and a second handle disposed a substantial distance forward of said first handle and near said front unit means and having second manually operable means for making said security means temporarily inoperative to render operative said igniting means.

4,061,262
SELF-RUNNING ONE-SIDE WELDING FACILITIES
Hirokazu Nomura; Katsumi Tohno, and Tomio Takahashi, all of Yokohama, Japan, assignors to Nippon Kokan Kabushiki Kaisha, Tokyo, Japan
Filed Apr. 19, 1976, Ser. No. 678,256
Claims priority, application Japan, Apr. 22, 1975, 50-54118[U]; Apr. 22, 1975, 50-49531; Apr. 23, 1975, 50-56266[U]; Apr. 24, 1975, 50-95127[U]; July 10, 1975, 50-54119[U]
Int. Cl.² B23K *5/22*
U.S. Cl. 228—50 **9 Claims**

1. A self-running one-side welding facility for welding together butted edges of material to be welded, comprising:
at least two spaced guiding rails;
magnetic means for magnetically attaching said guiding rails to said material to be welded and for suspending said guiding rails from one side of said material to be welded in the vicinity of said butted edges;
a motor driven means including means for mounting a backing metal material against the butted edges to be welded, said motor driven means including means for suspending same from said guiding rails such that said backing metal mounting means is self-running along said guiding rails; and
means coupled to said guiding rails and motor driven means

for pushing said backing metal against the butted edges of the material to be welded, said pushing means comprising a link mechanism having a pair of pivotally mounted links

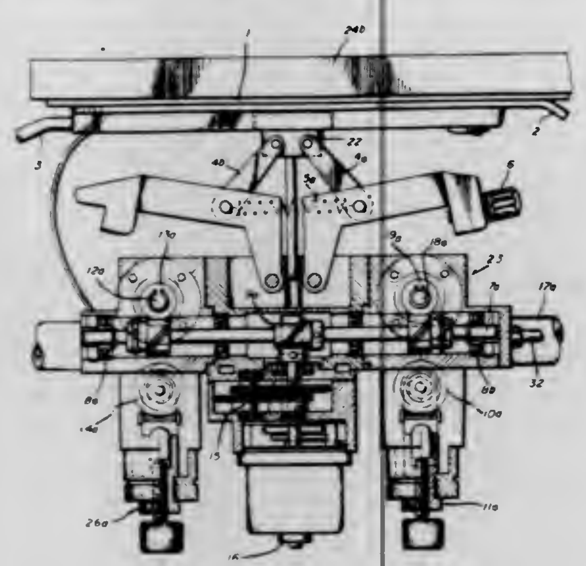

coupled to said backing metal, and spring means connected to said links for applying a force to said links for pushing said backing metal against said butted edges of the material to be welded.

4,061,263
METHOD OF BONDING A DIELECTRIC SUBSTRATE TO A METALLIC CARRIER IN A PRINTED CIRCUIT ASSEMBLY
Herbert Ohlstein, Elmwood Park, N.J., assignor to International Telephone and Telegraph Corporation, Nutley, N.J.
Filed Sept. 22, 1976, Ser. No. 725,204
Int. Cl.² B23K *31/02*
U.S. Cl. 228—124 50 Claims

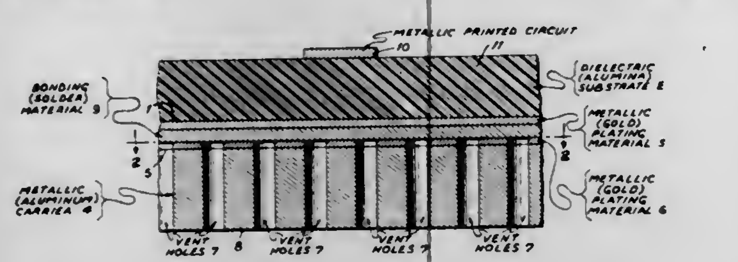

1. A method of bonding a dielectric body to a metallic body comprising the steps of:
plating at least one surface of said dielectric body with a metal, said one surface to be bonded to a given surface of said metallic body;
forming a plurality of vent means in said given surface;
tinning said plated one surface and said given surface separately with solder;
cleaning said tinned plated one surface and said tinned given surface separately to clean both of said tinned surfaces;
applying a flux to both of said cleaned tinned surfaces separately;
placing both of said fluxed cleaned tinned surfaces in contact with each other;
applying heat and pressure simultaneously to both of said bodies until said solder of both of said fluxed cleaned tinned surfaces flows; and
cooling both of said bodies in a natural manner to room temperature while still applying said pressure to bond said dielectric body to said metallic body;
said plurality of vent means removing excess flux and solder during said step of applying heat and pressure to provide an intimate bonded contact between both of said surfaces and to prevent said solder from flowing onto undesirable areas.

4,061,264
METHOD FOR PRODUCING HELICAL SEAM PIPES
Werner Bartels, and Heinz Krakow, both of Hamburg, Germany, assignors to Blohm & Voss AG, Hamburg-Steinwerder, Germany
Filed May 4, 1976, Ser. No. 683,076
Claims priority, application Germany, May 9, 1975, 2520610
Int. Cl.² B21C *37/08*
U.S. Cl. 228—145 2 Claims

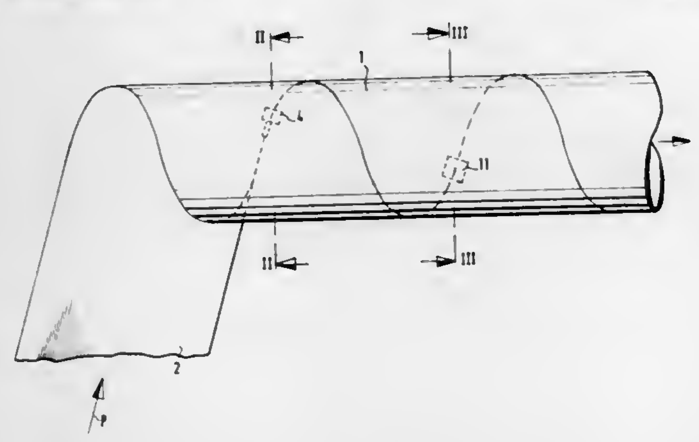

1. A method of producing welded helical seam pipe from a continuous strip of sheet metal, comprising the steps of chamfering the top and bottom surfaces of both edges of said strip of sheet metal, continuously feeding said strip of sheet metal to a pipe shaping station, helically winding the strip to form an axially extending pipe with the edges of the strip in abutting relation thereby forming an inside chamfered weld seam and an outside chamfered weld seam, shaping the chamfered surface of said edges so that the cross section of said inside chamfered weld seam can be welded at the maximum speed of travel of said strip, tack welding the outside chamfered edges together at a location in the winding of said strip into a pipe adjacent the point of initial contact of the strip edges into abutting relation so that only a portion of the welding of the outside seam is effected forming a helically extending joint between said abutting edges of the strip as the pipe is moving from the pipe shaping station in the axial direction thereof, finish welding the inside seam in said pipe forming station at a stationary location therein axially spaced from the location of said tack welding, severing the pipe having the tack welded outside chamfered seam and the finish welded inside chamfered seam, and thereafter finish welding the outside tack welded seam.

4,061,265
PRESSURE AND TEMPERATURE RESPONSIVE VALVE ASSEMBLY
Kazuhiko Kitamura, Toyota, Japan, assignor to Aisin Seiki Kabushiki Kaisha, Kariya, Japan
Filed June 18, 1976, Ser. No. 697,645
Claims priority, application Japan, June 18, 1975, 50-74705
Int. Cl.² G05D *23/10*
U.S. Cl. 236—48 R 5 Claims

1. A pressure and temperature responsive valve assembly comprising:
a housing;
piston means movably disposed within said housing and dividing the housing into first and second compartments, first port means adapted to connect said first compartment with a first pressure source and second port means adapted to connect said second compartment with a second pressure source;
said piston means being movable between first and second positions due to the pressure difference established between said two compartments;
third port means adapted to connect said second compartment with a fluid actuated device, fluid communication between said second compartment and said fluid actuated

device being controlled by the movement of said piston means; and
bimetallic snap valve means carried by said piston means and

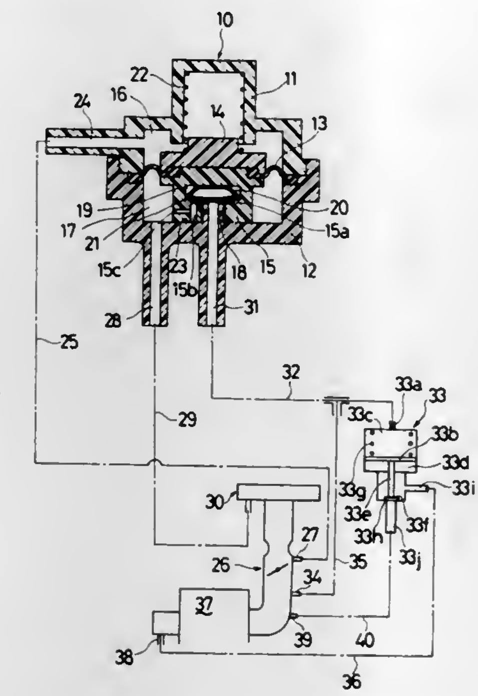

operable for controlling the communication between said second compartment and said fluid actuated device in response to changes in the temperature surrounding said housing.

4,061,266
ENVIRONMENTAL AIR DISTRIBUTION CONTROL SYSTEM POWERED BY SYSTEM PRESSURE
Ralph M. Ley, Jr.; Harold W. Alyea, and Thomas M. Holloway, all of Waukesha, Wis., assignors to Johnson Controls, Inc., Milwaukee, Wis.
Continuation of Ser. No. 387,702, Aug. 13, 1973, abandoned, which is a division of Ser. No. 201,006, Nov. 22, 1971, Pat. No. 3,779,275. This application Aug. 18, 1975, Ser. No. 605,525
Int. Cl.² F24F *7/04*
U.S. Cl. 236—49 18 Claims

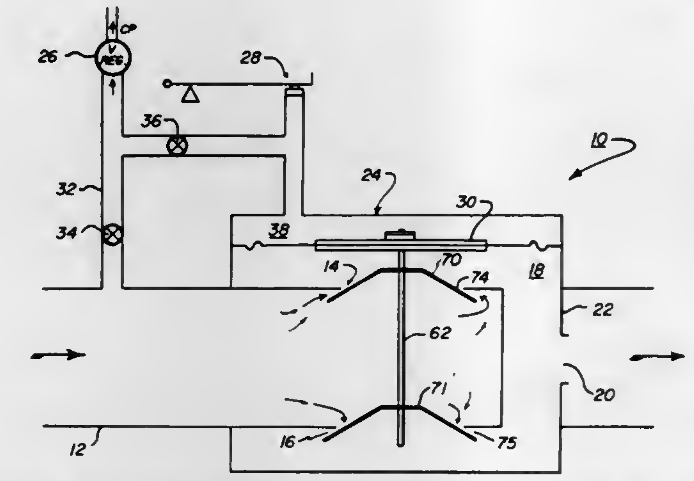

1. In an environmental control system including an air distribution duct having variable flow rates due to system variables, pressure regulating means for controlling the flow rate through said air duct comprising a pressure chamber disposed within said air duct between an inlet portion and an outlet portion thereof, said pressure chamber having an inlet communicating with said inlet portion of said air duct and an outlet with a fixed orifice communicating with said outlet portion of said air duct for permitting air flow through said chamber to establish a pressure in said chamber, reference means responsive to air flow through said duct to provide a substantially constant reference pressure, first means responsive to said constant reference pressure and to air flow through the inlet of said chamber for regulating air flow into said chamber for maintaining the pressure in said chamber substantially constant at a value which is established by said reference pressure to thereby maintain a constant flow rate through said fixed orifice, said reference means including second means for selectively varying said reference pressure in direct response to changes in the environmental temperature to thereby establish correspondingly different constant pressures in said chamber, whereby the rate of flow through said orifice is regulated in proportion to changes in temperature.

18. In an environmental control system for supplying conditioned air to a controlled space over an air distribution duct having variable flow rates due to system variables, apparatus for controlling the flow rate of air to said conditioned space comprising flow regulating means including a pressure chamber located within said air duct between an inlet portion and an outlet portion thereof, said pressure chamber having an inlet communicating with said inlet portion of said air duct and an outlet with a fixed orifice for permitting air flow through said chamber, first means disposed in said inlet of said chamber for controlling the flow rate from said inlet to said outlet of said chamber, pressure regulating means connected to said air duct adjacent to said inlet portion and responsive to air flow through said air duct to provide a regulated pressure derived from said inlet portion, and condition sensing means located in said controlled space for sensing a condition of said space and operable to modify the regulated pressure as a function of changes in the sensed condition, said flow regulating means further including second means responsive to said regulated pressure and to a pressure provided in said chamber in response to air flow through said air duct and supplied to said second means in opposition with said regulated pressure for causing said first means to provide a constant flow rate through said fixed orifice at a given value, and to respond to a change in said regulated pressure as effected by said condition sensing means to cause said first means to provide a constant flow rate through said fixed orifice at a different value.

4,061,267
SOLAR HEATING SYSTEM AND OPERATION THEREOF
George O. G. Lof, 4850 Olive St., Denver, Colo. 80202
Filed Aug. 18, 1975, Ser. No. 605,672
Int. Cl.² F24J *3/02*
U.S. Cl. 237—1 A 14 Claims

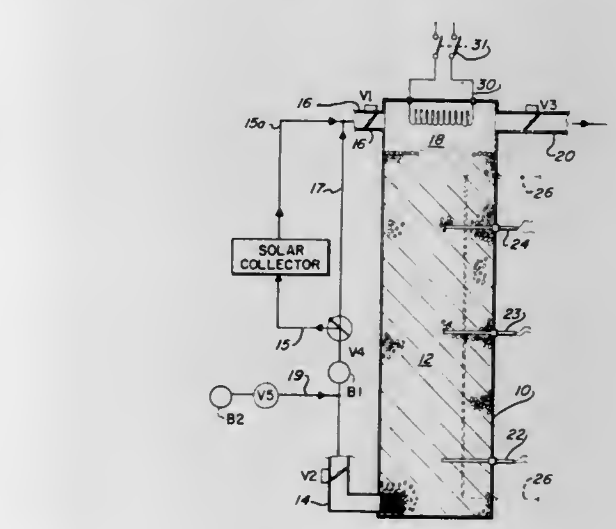

1. A heating system for a building comprising:
a. solar heat collector means for air heat transfer medium;
b. heat storage means including an elongated bed of solid particulate matter arranged for air passage therethrough and including a plenum chamber;
c. duct means for circulating air from said solar heat collector through said plenum chamber and then through said bed of particulate matter from one end in one direction for heating the same and from the opposite end in the opposite direction through said bed of particulate matter for heating air to be used to heat said building;

d. auxiliary heater means mounted in said plenum chamber for heating air passing therethrough;
e. means for moving air through said ducts and said bed of particulate matter;
f. temperature sensor means in said bed of particulate matter;
g. means for actuating said means for moving air through said ducts and said bed of particulate matter in response to said temperature sensor means;
h. control means for actuating said auxiliary heater means in response to said temperature sensor means and during a predetermined period corresponding to a low power load interval during a day so as to pass heated air to said heat storage means in the same direction as heated air from said solar heat collector;
i. temperature sensor means in said building; and
j. means for directing air through said bed of particulate matter so as to heat air directed into said building in response to a predetermined setting of said temperature sensor means in said building.

10. A method of operating a heating system for a building which includes a solar heat collector for supplying hot air to heat storage means including solid particulate material having a nominally hot end and a cool end and an auxiliary heater, and including temperature sensors in the building to be heated and temperature sensor means in the heat storage means spaced from end to end in the storage means which comprises:
a. passing air from the cool end of said storage means to said solar heat collector during times of effective solar radiation and then to the hot end of the collector;
b. passing air through the heat storage means with the exit air from the hot end of said storage means on demand of the temperature sensors in the building to be heated;
c. operating the auxiliary heater in response to need signals from the temperature sensor means in the storage means and during predetermined time periods as set by time determining means; and
d. circulating air through said storage means, during operations of said auxiliary heater, from hot to cool end thereof to store heat in said storage means supplied by said auxiliary heater.

4,061,268
TRACTION MAT
Robert D. DeMaster, Afton, Minn., assignor to Minnesota Mining and Manufacturing Company, St. Paul, Minn.
Filed Dec. 1, 1975, Ser. No. 636,581
Int. Cl.^{2} E01B *23/00*
U.S. Cl. 238—14 **8 Claims**

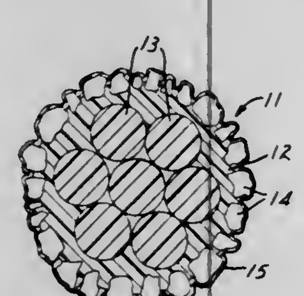

1. A flexible traction mat capable of being wound into a small-diameter storage roll around a 5-millimeter-diameter mandrel without damage comprising an open-mesh net of strands that are encased around their individual circumferences with a frictional coating that comprises a layer of flexible elastic binder material adhered to the strands and a dense monolayer of abrasive granules partially embedded in, and partially protruding out of, the binder material so as to frictionally engage a surface against which the mat is laid, the area of the openings in the mat averaging at least 50 square millimeters, whereby the mat may be repeatedly used between an icy street surface and the wheels of a vehicle to increase the traction of the wheels.

4,061,269
RESTRAINING RAIL MOUNTING ASSEMBLY
Richard M. Hixson, McLean, Va., assignor to Transit Products Company, Inc., Washington, D.C.
Filed Mar. 22, 1976, Ser. No. 669,109
Int. Cl.^{2} E01B *5/18*
U.S. Cl. 238—17 **1 Claim**

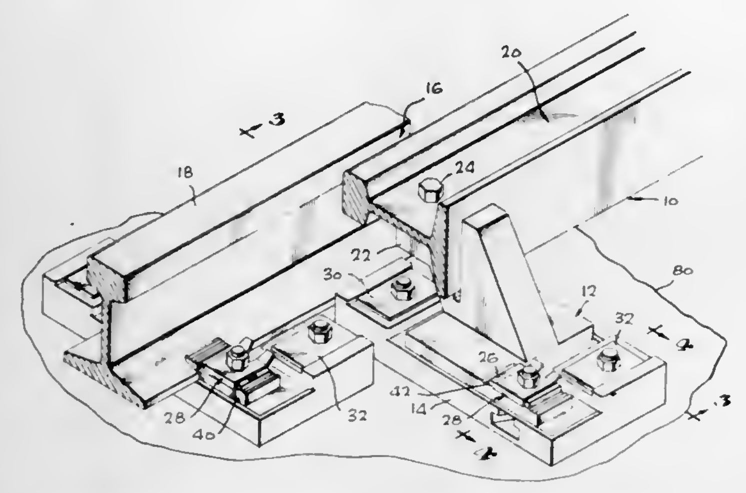

1. Apparatus for preventing the wheels of a railroad train or the like from leaving a railroad track, said apparatus comprising:
a restraining rail mounted parallel to and spaced a constant distance from the railroad track and comprising at least one piece of railroad track mounted on its side so that the head portion of the piece of track presents a restraining surface adjacent the railroad track;
mounting means mounting said restraining rail said constant distance from the track, said mounting means comprising a mounting bracket comprising a base portion, a tongue portion having a mounting hole therein for fixedly securing the web of the piece of track to said bracket and means defining a slot in which a portion of one side of the base flange of said piece of track is received, said slot defining means including an abutment portion engaging the bottom side of the base flange of said piece of track;
adjusting means for adjusting the position of said mounting bracket comprising means defining mounting slots in said base portion of said mounting bracket, means defining a serrated surface in said base portion surrounding one of said mounting slots, and a serrated washer engaging the serrated surface of said base portion; and
bracket mounting and support means comprising a support plate secured in a mounting pedestal and including at least one bolt slot extending into said support plate from the edge thereof obliquely to said edge, and a bolt engaged in said bolt slot for securing bracket to said support plate.

4,061,270
STEEL TIE INSULATING SADDLE
Joseph M. Wandrisco, Salem Township, Westmoreland County, Pa., assignor to United States Steel Corporation, Pittsburgh, Pa.
Filed Apr. 9, 1976, Ser. No. 675,437
Int. Cl.^{2} E01B *9/54*
U.S. Cl. 238—107 **10 Claims**

1. A unitized insulative element for use with a steel cross tie having associated rail retaining elements for preventing lateral movement of a rail on such steel tie and rail anchors for preventing longitudinal movement of such rail relative to such steel tie, said unitized insulative element comprising:
insulating base means adapted to be positioned between such rail and such steel tie for insulating the one from the other;
upwardly depending insulating detent means for insulating such rail retaining elements of such tie from such steel tie, said upwardly depending detent means being configured to provide means, relative to said base means and such associated rail retaining elements, for preventing movement of said unitized insulative element in a direction parallel to such railroad rail and in a direction normal thereto; and

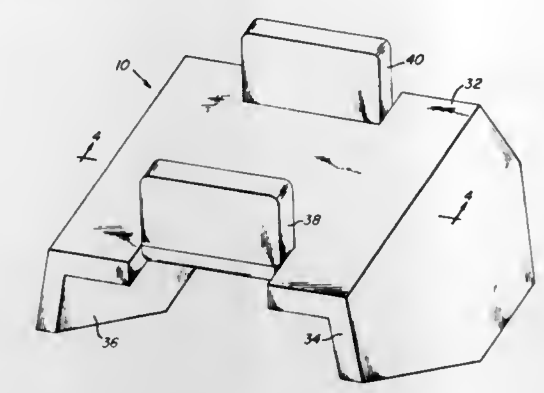

downwardly depending insulating means for insulating such steel tie from such rail anchors and additionally, for preventing movement of said unitized insulative element in a direction parallel to such railroad tie.

4,061,271
CONTROL SYSTEM FOR HIGH PRESSURE HYDRAULIC SYSTEM
Wade L. Kimbrough, P.O. Box 1467, Hobbs, N. Mex. 88240
Filed Oct. 13, 1976, Ser. No. 731,538
Int. Cl.^{2} B05B *9/00*
U.S. Cl. 239—1 **19 Claims**

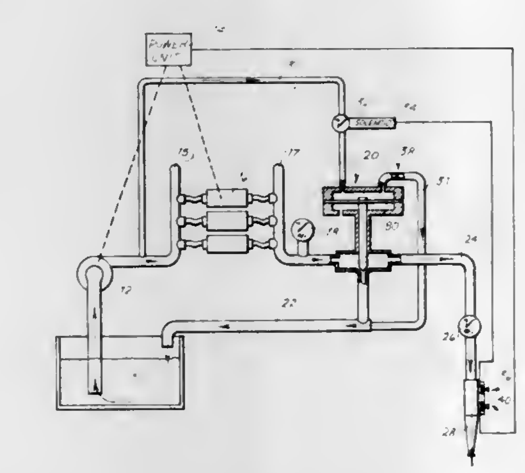

1. In a liquid system using very high pressures, including
a. a high pressure pump having
i. a pressure inlet, and
ii. a pressure outlet,
b. a reservoir of liquid,
c. a discharge,
d. a pressure conduit connecting the pressure outlet of the high pressure pump to the discharge, and
e. a control on the discharge;
THE IMPROVED SYSTEM COMPRISING IN COMBINATION:
f. a feed pump having
i. a feed inlet, and
ii. a feed outlet,
g. the feed inlet connected to the reservoir of liquid,
h. the feed outlet connected to the pressure inlet,
j. a bypass conduit connecting the pressure outlet to the reservoir,
k. a pressure responsive valve including
i. a pressure valve at the entrance of the bypass conduit,
ii. a pressure responsive device for closing said pressure valve,
m. the high pressure pump outlet pressure urging the pressure valve located at the entrance to the bypass conduit to an open condition,
n. a normally closed control valve interconnecting the pressure responsive device to the feed outlet,
o. the pressure responsive device closing the pressure valve when pressurized, and
p. said control valve responsive to the control on the discharge.

4,061,272
IRRIGATION DEVICE
Emanuel A. Winston, 871 Marion Ave., Highland Park, Ill. 60035
Continuation-in-part of Ser. No. 588,900, June 20, 1975, abandoned. This application Dec. 18, 1975, Ser. No. 641,739
Int. Cl.^{2} A01G *27/00;* **B05B** *15/00*
U.S. Cl. 239—145 **13 Claims**

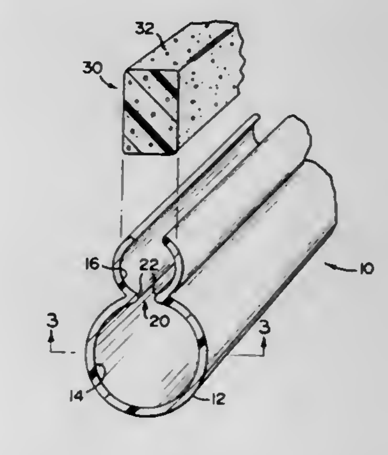

1. An irrigation device of the type primarily designed to deliver liquid along a predetermined path, said device comprising: conduit means including a substantially elongated configuration, said conduit means comprising at least a first compartment and a second compartment closely adjacent to and parallel to said first compartment and connected in fluid communication with one another, said conduit means comprising a one piece wall of extruded material integrally formed and configured to define said first and second compartment, interconnecting means disposed in interconnecting fluid communication between said first and second compartments; dispersion means comprising an elongated resilient liquid permeable porous material dimensioned to be greater than second compartment and mounted therein, said a portion of said dispersion means being compressed to occupy all of said second compartment with the remaining portion of said dispersion means extending outwardly therefrom in fluid communication with the exterior of said conduit means.

4,061,273
TANK SPREADER
James L. Richardson, St. Paul, Minn., assignor to Veda, Inc., Long Lake, Minn.
Filed Aug. 23, 1974, Ser. No. 500,133
Int. Cl.^{2} B05B *1/20*
U.S. Cl. 239—172 **4 Claims**

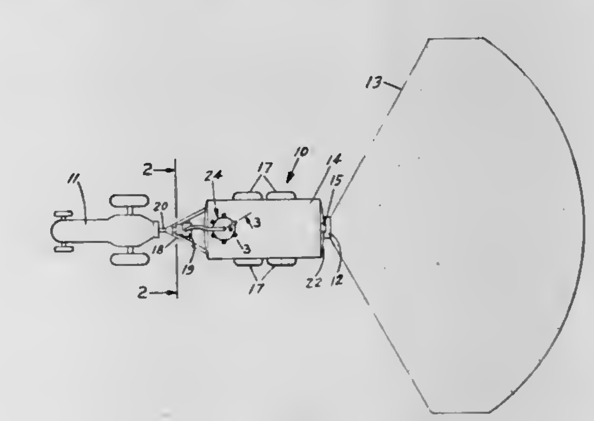

1. A liquid manure spreader comprising: a tank having a chamber for storing liquid manure, means having an opening in communication with the chamber, a cover closing said open-

ing, pump means for selectively evacuating air from the chamber and supplying air under pressure to the chamber, control valve means for selectively controlling the movement of air to and from the chamber, air line means connected to the cover and valve means providing an air connection between the valve means and the chamber, manure discharge means on the tak for spreading manure when air under pressure is applied to the chamber, manure inlet means allowing manure to move into the chamber when air is evacuated from the chamber, safety shut-off valve means located inside the chamber operable to prevent the evacuation of air from the tank through the air line means in response to the level of the manure in the chamber, said shut-off valve means including valving means movable to a closed position in response to the level of the manure in the chamber to prevent escape of liquid manure into the air line means and pump means, and means attaching the shut-off valve means to the cover, said control valve means including a housing having a bore, a first section and a second section, said bore extended through said sections, a first port in the first section open to the bore and to the atmosphere, a second port in the first section open to a bore and to the air intake of the pump, a third port in the first section open to the bore and air line means, a fourth port in the second section open to the bore and atmosphere, a fifth port in the second section open to the bore and air exhaust of the pump, a sixth port in the second section open to the bore and air line means, a spool rotatably located in said bore, said spool having a first cavity and a second cavity, said first cavity positionable in a first position in communication with the first and second ports and a second position in communication with the second and third ports, said second cavity positionable in communication with the fifth and sixth ports when the spool is in the first position whereby air under pressure is directed from the pump to the air line means, and positionable in communication with the fourth and fifth ports when the spool is in the second position whereby air is evacuated from the air line means by a pump.

4,061,274

MATERIAL REDUCING APPARATUS AND METHOD OF OPERATING THE SAME

Robert M. Williams, Ladue, Mo., assignor to Williams Patent Crusher and Pulverizer Company, St. Louis, Mo.

Filed July 26, 1976, Ser. No. 708,889

Int. Cl.² B02C *23/14*

U.S. Cl. 241—24 **6 Claims**

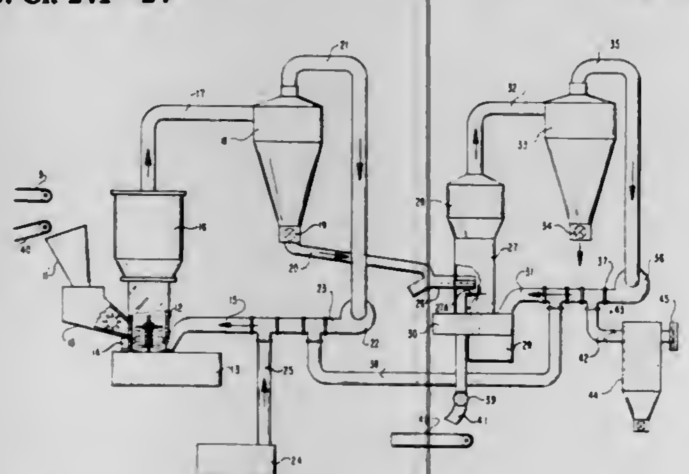

1. A method of reducing the size of a moisture carrying friable material while reducing regrinding of the finer fractions comprising the steps of: connecting up in a first air circulating system and in series order a material grinding mill, a fluid bed separator chamber, a first cyclone separator and a blower; introducing the friable material to the first system at the grinding mill, passing the output of said grinding mill through the fluid bed separator chamber to separate the finer fraction from the coarser and heavier fraction which returns to the grinding mill for further reduction, and discharging ground material from the first system at the cyclone separator while returning the air from the blower to the grinding mill; connecting up in a second air circulating system and in series order a material classifier, a second cyclone separator and a second blower; introducing to the second system at the material classifier the material discharged at the first cyclone separator from the first system; classifying the material introduced from the first system in the second system into acceptable and oversize fractions; and discharging the acceptable fraction at the second system cyclone separator while returning the oversize fraction to the first system at the grinding mill.

4,061,275

CONTINUOUS MIXING APPARATUS, ESPECIALLY COOLING MIXER AND A METHOD FOR PRODUCING GRANULATED MATERIAL

Friedrich Walter Herfeld, Wall 1, 5982 Neuenrade, Germany

Filed Sept. 3, 1976, Ser. No. 720,201

Int. Cl.² B02C *23/36*

U.S. Cl. 241—46.04 **12 Claims**

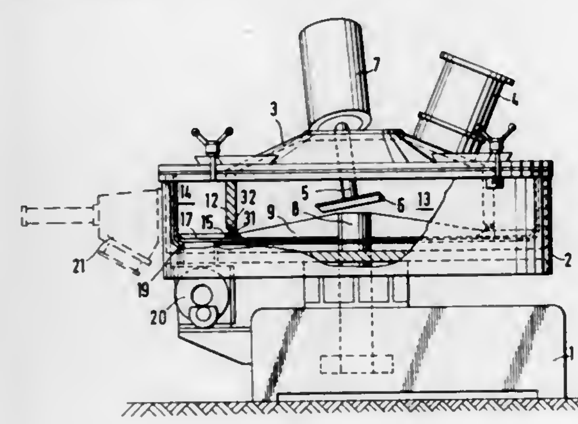

1. A continuous mixing apparatus comprising:

a. a mixing container having a container bottom;

b. a concentric ring wall disposed within said container and dividing it into an interior space whose outer periphery is defined by said ring wall and an outer annular space whose inner periphery is defined by said ring wall, said ring wall terminating in a bottom edge thereof disposed above said container bottom;

c. a feeding nozzle in flow communication with said interior space to introduce mixture components therein;

d. discharge opening means leading from said outer annular space;

e. a central agitator shaft supporting mixing wings for rotation within said interior space adjacent said container bottom;

f. a rotor ring carried by said mixing wings at a location radially spaced from said agitator shaft and disposed adjacent said bottom edge of said ring wall to define therewith a gap of selected width disposed above said container bottom and radially spaced from said shaft whereby mixture particles of a size not greater than said width of said gap are passed, by rotation of said wings, from said interior space to said outer annular space for removal therefrom via said discharge opening.

4,061,276

FRACTIONING AUTOGENOUS TRITURATOR

Paul J. Felker, 2200 Washington Ave., and Shubel H. Owen, Rte. 4, Box 238, both of Marshfield, Wis. 54449

Filed Jan. 17, 1977, Ser. No. 759,964

Int. Cl.² B02C *23/10*

U.S. Cl. 241—69 **6 Claims**

1. Material processing apparatus comprising a bowl having a bottom wall and an upwardly concave wall portion terminating in a bowl rim, a frame, means for rotatably supporting the bowl on said frame for rotation about a vertical axis, means in said bowl to impart rotational movement to materials contained in the bowl for travel upwardly along the concave wall, an inlet in said frame above said bowl bottom wall for introducing materials to be processed into said bowl, a plurality of deflector means located on said frame and within said bowl for intercepting material centrifugally elevated toward said bowl rim on said concave wall portion and for directing the materials in a plurality of guided and intersecting material streams to

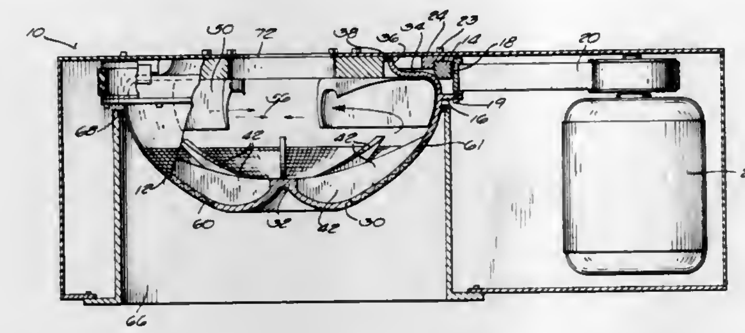

cause collision of the materials in the streams to triturate the particles, and foraminous outlet means in said bowl having openings sized to afford escape of fines of a pre-selected particle size as particles are reduced to said size during recirculation and repeated trituration.

4,061,277

SHREDDER WITH GRATE CARTRIDGE

Richard P. Whitney, East Moline, Ill., assignor to Sivyer Steel Corporation, Milwaukee, Wis.

Filed Sept. 20, 1976, Ser. No. 725,031

Int. Cl.² B02C *23/10*

U.S. Cl. 241—73 **6 Claims**

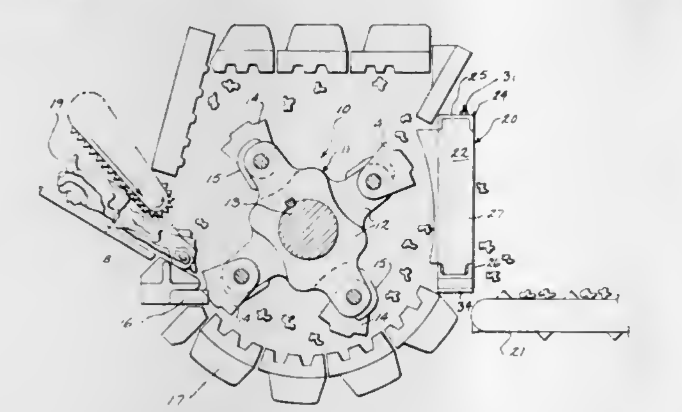

1. In a shredder of the type used to reduce scrap materials such as scrapped automobiles to pieces of a desired size, which shredder comprises a housing having a top, a bottom and side walls and an inlet and an outlet, rotary hammer means positioned in the interior of said housing, cutter means, means for rotating said hammer means to coact with the cutter means so as to reduce the scrap materials entering said housing via said inlet to pieces of a desired and a grate closing the outlet to pieces larger than the desired size, the improvement which comprises locating the outlet of the shredder in a side wall at a point approximately 180° from the inlet and closing said outlet with an improved grate which includes a frame having a top piece, a bottom piece and side pieces, a plurality of grate segments having top and bottom edges adapted to be received in the top piece and bottom piece of the frame, respectively, said segments being removably secured within said frame to form a unitary grate having openings through which pieces of the desired size can exit from the housing, and means removably securing the segments within the frame which means can be opened and closed from outside the shedder housing to permit the grate segments to be removed from the frame.

4,061,278

ARRANGEMENT FOR COMMINUTING AND/OR SHREDDING OF PAPER AND SYNTHETIC MATERIALS

Adolf Ehinger, Goethestr. 10, 7460 Balingen, Germany

Filed Apr. 12, 1976, Ser. No. 675,998

Claims priority, application Germany, Apr. 12, 1975, 2516111

Int. Cl.² B02C *18/22*

U.S. Cl. 241—74 **4 Claims**

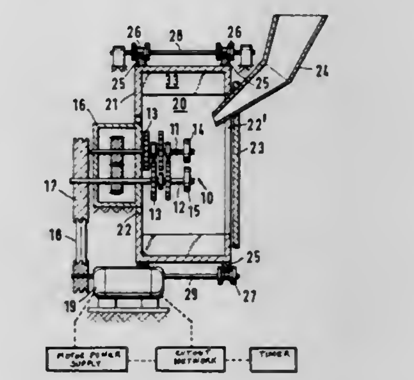

1. In a comminuting arrangement, a housing supported for rotation about a first axis and for pivotal movement about a second axis perpendicular to the first axis, first and second shafts disposed in the housing parallel to said first axis, at least the first shaft being supported for rotation about its axis, means comprising spaced discs affixed to the first and second shafts within the housing and intermeshing to form a nip therebetween for shredding material introduced into the nip from above when at least the first shaft is rotated, means for introducing material to be shredded into the housing, means disposed on the interior of the periphery of the housing for effecting movement so that the material in the housing moves jointly with the housing when the housing is rotated until said material is disposed above the nip of the shredding means, means for rotating the housing about the first axis, and means for rotating the first shaft about its own axis.

4,061,279

HIGH-SPEED ROTATING CRUSHING MACHINERY

Daniel C. Sautter, Kimberton, Pa., assignor to Pennsylvania Crusher Corporation, Broomall, Pa.

Continuation of Ser. No. 662,631, March 1, 1976, abandoned, Continuation-in-part of Ser. No. 501,551, Aug. 29, 1974, abandoned. This application Feb. 4, 1977, Ser. No. 765,720

Int. Cl.² B02C *23/00*

U.S. Cl. 241—86.1 **63 Claims**

1. A drive shafting apparatus suitable for use in machines including a high speed rotating impeller or similar element, comprising:

an outer sleeve shaft adapted to be mounted for rotation within said machine;

an inner, cantilever shaft rigidly connected at one end of said cantilever shaft within said outer sleeve shaft and having substantial radial play within said sleeve shaft at the other end of said cantilever shaft, said other end of said cantilever shaft being adapted for connection to said high speed rotating element for rotation therewith; and

damper means situated about said other end of said cantile-

ver shaft for reducing radial vibration of said cantilever shaft as it rotates through critical speeds and for substantially eliminating whirling of said cantilever shaft and high speed rotating element.

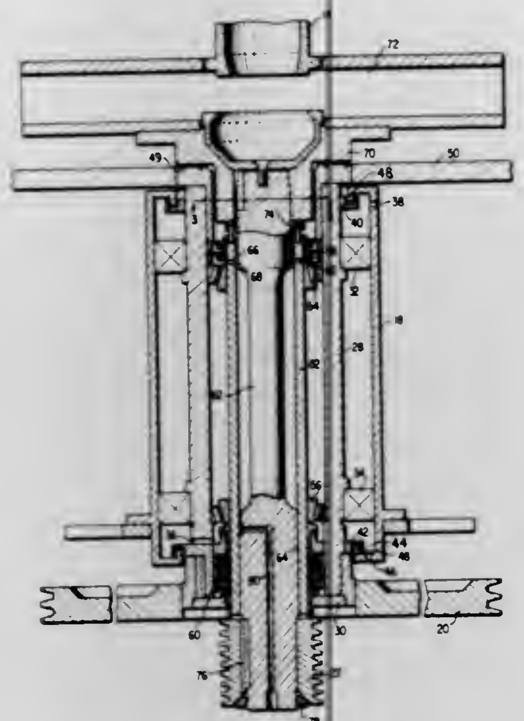

4,061,280
MIXING APPARATUS FOR FEED TO INJECTION MOLDING MACHINE

Theodor M. Box, 1108 Aileen Road, Brielle, N.J. 08730
Filed Oct. 29, 1976, Ser. No. 736,741
Int. Cl.² B02C *18/22*
U.S. Cl. 241—101.6 **4 Claims**

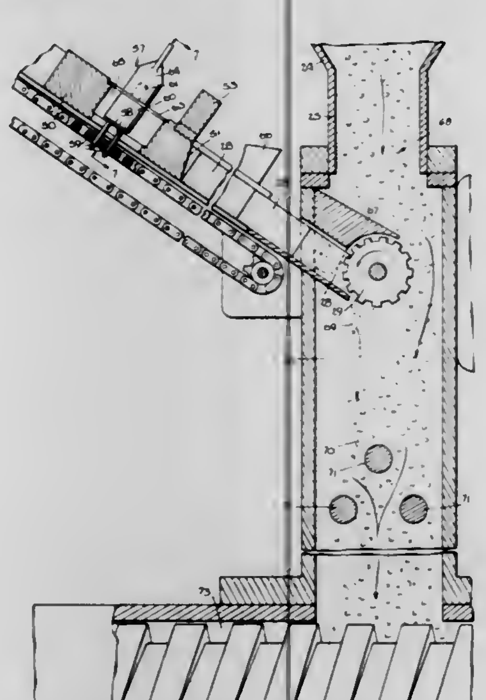

1. In an injection molding machine of the type for molding articles from particulate plastic material fed in measured amounts from a hopper to a reciprocally operated injection screw and having a color grinder associated with said hopper for introducing predetermined amounts of pigment to said plastic material, the improvement comprising variable speed means interconnected with said color grinder to control the amount of pigment relative to the amount of plastic material being fed to said injection screw, propulsion means associated with said color grinder for providing positive displacement feeding of said pigment to said color grinder, and safety release means on said pigment propulsion means for disengaging the latter means when said propulsion means moves near said grinder.

4,061,281
STRIKING PLATE FOR DISINTEGRATING MILL

Theodore F. Gundlach, Belleville, Ill., and Arthur L. Hawthorne, St. Clairsville, Ohio, assignors to J.M.J. Industries, Inc., Belleville, Ill.
Filed July 16, 1976, Ser. No. 705,795
Int. Cl.² B02C *13/10*
U.S. Cl. 241—188 R **8 Claims**

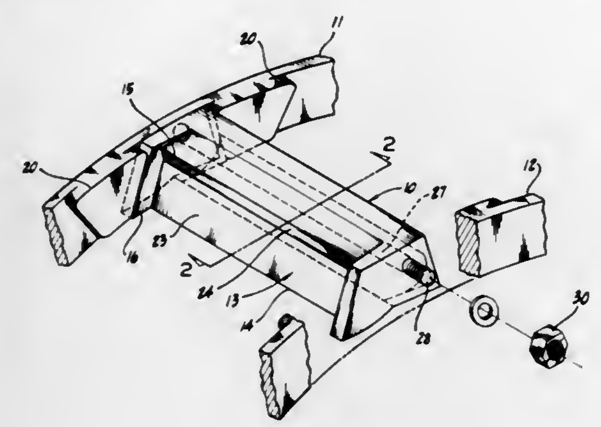

1. A striking plate for a disintegrating mill, comprising:
a. an elongate plate having a leading impact face with inner and outer edges, the leading impact face extending rearwardly from its inner edge toward its outer edge at substantially a constant angle for the major portion of its height, and extending relatively forward to its outer edge for a minor portion of its height, and
b. an integral flange at each end of the plate extending forwardly of the leading impact face, the flanges including outwardly converging, flow-directing side surfaces adjacent the leading impact face and extending from the inner to the outer edge.

4,061,282
EASY ACCESS-LOW NOISE GRANULATOR

William J. Walker, East Greenwich, and Henri A. Boulay, West Warwick, both of R.I., assignors to Leesona Corporation, Warwick, R.I.
Filed Nov. 22, 1976, Ser. No. 744,179
Int. Cl.² B02C *18/22*
U.S. Cl. 241—222 **8 Claims**

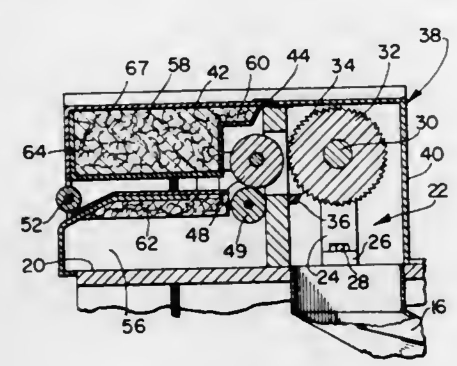

1. A granulator comprising a frame, a chamber, a rotor mounted for rotation about an axis within said chamber, feed means including a feed slot for introducing material into said chamber, said rotor including cutting means for contact with material fed to said chamber for size reduction thereof, a composite cover having first and second cover portions relatively movable with respect to each other and to said frame, said first cover portion at least partially enclosing said chamber, said second cover portion extending above said feed slot, said first cover portion connected to the frame along a vertical hinge line and said second cover portion in turn connected to the first cover portion along a horizontal hinge line whereby progressive opening of said second cover portion with respect to said first cover portion and then said first cover portion with respect to the frame along their respective hinges permits partially and fully open granulator positions whereby said feed means and said chamber are sequentially exposed.

4,061,283
REFINER FOR GRINDING OF FIBROUS MATERIAL

Albrecht Kahmann, Weingarten, Germany, assignor to Escher Wyss GmbH, Weingarten, Germany
Filed June 8, 1976, Ser. No. 693,918
Claims priority, application Switzerland, June 11, 1975, 7533/75
Int. Cl.² B02C *7/12*
U.S. Cl. 241—261.3 **2 Claims**

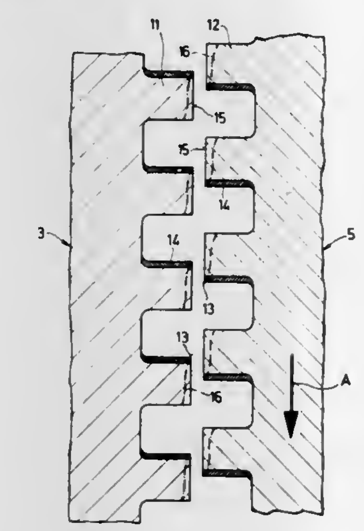

1. A refiner for grinding fibrous materials comprising
a stator having a plurality of rib-shaped teeth of substantially rectangular cross-section; and
a rotor having a plurality of rib-shaped teeth of substantially rectangular cross-section, said rotor being disposed in facing relation to said stator;
each said tooth of said stator and said rotor having a leading flank disposed in the mutual direction of movement of said stator and rotor, an end face and a surface layer on said leading flank of a hardness greater than the hardness of said end face to maintain a sharp cutting edge during operation.

4,061,284
HARVESTER CUTTERHEAD

Wesley Paul Raisbeck; Merlyn Duane Bass; Bobbie Dean Whicker, all of Ottumwa; William Clair Davis, Blakesburg, and Raymond Harry Fairbank, Ottumwa, all of Iowa, assignors to Deere & Company, Moline, Ill.
Filed Sept. 14, 1976, Ser. No. 723,036
Int. Cl.² B02C *18/18*
U.S. Cl. 241—294 **20 Claims**

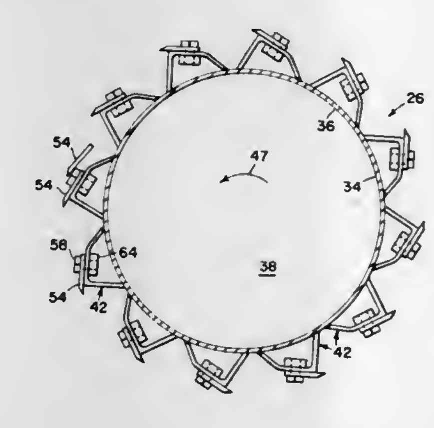

1. A cylinder type cutterhead for a harvesting machine comprising: a rotatable, hollow drum having a generally cylindrical peripheral surface and axial shaft means; a plurality of knife support members mounted on the peripheral surface in a plurality of circumferential rows, each support member including a deflector surface on its leading side during normal cutterhead rotation and a relatively flat knife mounting surface trailing the deflector surface and inclined inwardly from its leading edge; a plurality of substantially flat knives respectively mounted on the knife mounting surfaces of the support members, each knife having an axial length substantially less than the axial length of the cutterhead and including a cutting edge along its leading edge generally parallel to the cutterhead axis, the ends of the knives mounted in one row of support members being axially proximate to the opposite ends of the knives in the adjacent row; and removable fastener means removably attaching each knife to its respective support member so that the knife cutting edges are disposed at the cutterhead periphery, substantially equidistant from the cutterhead axis, the knife cutting edges generating a cylinder as the cutterhead rotates.

4,061,285
METHOD AND APPARATUS FOR PACKAGING LINEAR MATERIAL

Thomas V. Powers, Jr., Anderson, S.C., assignor to Owens-Corning Fiberglas Corporation, Toledo, Ohio
Filed May 12, 1976, Ser. No. 685,591
Int. Cl.² B65H *54/02, 54/28*
U.S. Cl. 242—18 R **3 Claims**

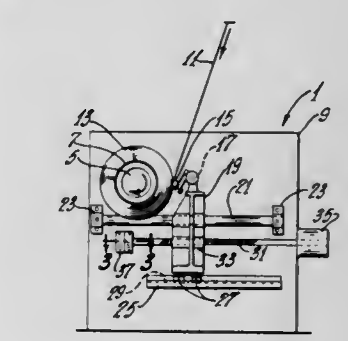

1. Apparatus for packaging linear material comprising:
a rotatable collector onto which the linear material can be wound as a package;
a movable traverse guide for positioning the linear material on the collector;
a rotatable ball screw movably connected to the traverse guide;
a motor for rotating the ball screw to urge the traverse guide towards the package;
a clutch coupling having a rotatable first portion fixedly attached to the ball screw and a rotatable second portion adapted to be placed in engagement with the first portion to securely engage the second portion with the first portion;
fluid employing means for engaging the second portion of the clutch coupling with the first portion when the collector is rotating; and,
an overrunning clutch attached to the second portion of the clutch coupling, the overrunning clutch adapted to restrict the traverse guide from moving towards the package when the second portion of the clutch coupling is engaged with the first portion.

4,061,286
AUTOMATIC CASSETTE LOADER

James L. King, Sr., Sudbury; James L. King, Jr., Southboro, and William E. Cline, Braintree, all of Mass., assignors to King Instrument Corporation, Westboro, Mass.
Filed June 14, 1976, Ser. No. 695,449
Int. Cl.² B65H *19/20*
U.S. Cl. 242—56 R **33 Claims**

1. In combination with a machine for loading a selected supply tape into a cassette which includes a tape leader, said machine having cassette holding means for holding the cassette to be loaded, a splicing block assembly for supporting the leading end of the supply tape and the leader of the cassette to be loaded, leader extractor means movable between said cas-

sette holding means and said splicing block assembly for withdrawing the leader from a cassette held by said cassette holding means and positioning the withdrawn leader on said splicing block assembly, means for operating said leader extractor means, multi-elememt means for sequentially (a) severing a leader that has been positioned on the splicing block assembly into first and second leader sections, (b) splicing said first leader section to the leading end of the supply tape, (c) winding the first leader section and a predetermined length of the supply tape which is connected thereto into the cassette held by the cassette holding means, (d) severing said supply tape at said splicing block assembly so as to form a trailing end for said

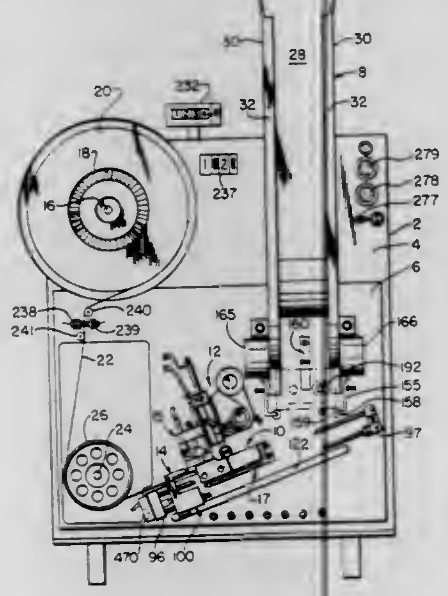

predetermined length of supply tape, and (e) splicing said trailing end to the second leader section, and means for causing said multi-element means to operate according to sequence (a) through (e) after a leader has been positioned on said splicing block assembly by said leader extractor means, the improvement comprising: leader centering means for acting upon a leader which has been extracted so as to cause the leader to shift lengthwise relative to the splicing block assembly to the extent required for the severing of the leader to be effected substantially at the midpoint of the leader, and means for operating said leader centering means before operation of said multi-element means.

4,061,287
PAPER-WINDING UNITS
Keith James Shakespeare, Slough Place Farm, Cuckfield, Sussex, England
Filed Sept. 3, 1976, Ser. No. 720,449
Claims priority, application United Kingdom, Sept. 3, 1975, 36198/75
Int. Cl.^{2} B65H *17/02, 59/00*
U.S. Cl. 242—67.1 R **6 Claims**

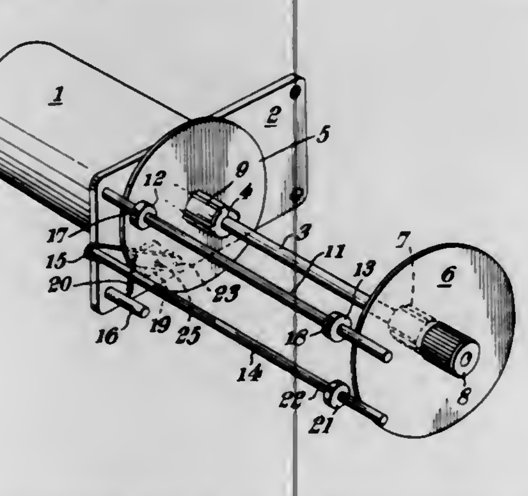

1. A paper-winding unit in, or for use in connection with, a teleprinter, comprising
a mounting plate;
an electric motor fixed to said mounting plate;
a shaft driven by said electric motor;
paper-receiving means carried by said shaft and having an end adjacent said mounting plate and a free end;
a paper guide rod fixed to said mounting plate and extending parallel to said shaft;
switch means for controlling said motor; and
a longitudinally extending operating member for controlling said switch means, said operating member having one end near said mounting plate and extending parallel to said guide rod;
and wherein the ends of said shaft, said guide rod and said operating member remote from said mounting plate are not separately supported.

4,061,288
RING-SHAPED LINE PROTECTING ELEMENT FOR USE IN FISHING REELS
Jarding Urban Karlsson, and Hugo Ragnvald Svensson, both of Svangsta, Sweden, assignors to ABU Aktiebolag, Svangsta, Sweden
Filed May 26, 1976, Ser. No. 690,062
Claims priority, application Sweden, May 27, 1975, 7506000
Int. Cl.^{2} A01K *89/00*
U.S. Cl. 242—84.1 K **5 Claims**

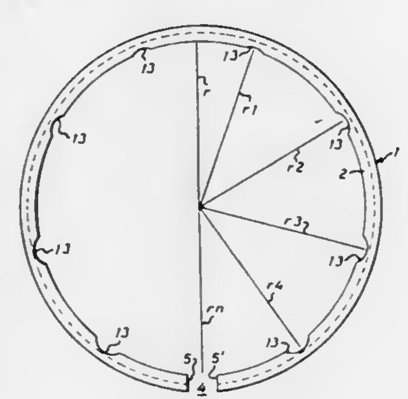

1. A line protecting element for use in fishing reels with a line spool having circular end walls and with a surface surrounding at least one of said end walls of the line spool in spaced relation thereto,
said line protecting element comprising
a split ring of elastic material, said ring being formed and dimensioned to be seated on the end wall of the end wall of the line spool and, in the seated position, to substantially close the space between the end wall and the surrounding surface, said elastic split ring being shaped to have, in a free condition of the ring, two facing, spaced apart ends where said ring is split and a spring rigidity which varies along said ring, and said split ring being formed to be non-circular in free condition and having, in said free condition, a maximum radius in the area of the split portion of said ring and a decreasing radius in both directions away from said area of maximum radius to a minimum radius in the zone opposite said area, and said ring being so shaped that, when bringing together said facing ends to a substantially closed annular form, in the form said ring is to have in position of use, it is generally circular and owing to its natural tendency to spring outwardly and its varying spring rigidity, adapts itself to said surrounding surface irrespective of minor non-circularity thereof.

4,061,289
WINDING MACHINE FOR ELECTRIC INDUCTIVE APPARATUS
Yoshio Miura; Kazuhiro Kobayashi, and Masao Kotera, all of Hitachi, Japan, assignors to Hitachi, Ltd., Japan
Filed Apr. 5, 1976, Ser. No. 673,526
Claims priority, application Japan, Apr. 16, 1975, 50-45232
Int. Cl.^{2} B65H *75/24;* **H01F** *41/06*
U.S. Cl. 242—7.13 **2 Claims**

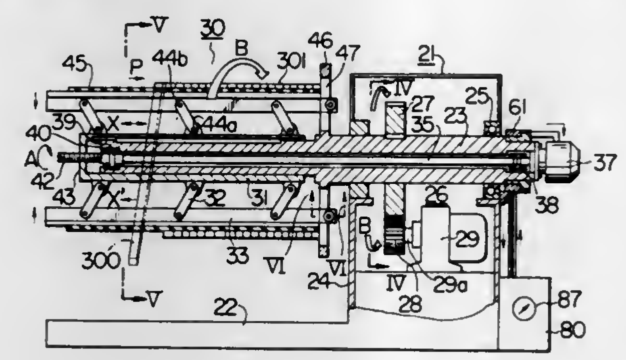

1. In a winding machine for forming an electrical inductive apparatus including a stationary support, a bearing mounted on said support, a main drive shaft supported at one end thereof by said bearing, and drive means for drivingly rotating said drive shaft, the improvement comprising
a universal winding barrel having a slider mounted on said drive shaft for sliding in the axial direction of said shaft, a plurality of winding barrel plates disposed circumferentially around said shaft, a plurality of radially extending links pivotally connecting said slider to said plates, a rotating driving source mounted on the end of said drive shaft adjacent said bearing, a transmission rod extending through an axial bore in said drive shaft and beng connected at one end thereof to said rotating driving source so as to be rotated thereby, the other end of said transmission rod being in threaded engagement with the end of said slider so as to effect axial movement of said slider on said shaft as said transmission rod is rotated by said rotating driving source, and guide means for inhibiting axial movement of said plates while permitting radial movement thereof with respect to said drive shaft,
said rotating driving source including a hydraulic motor, hydraulic slip ring means for supplying and discharging hydraulic fluid to said hydraulic motor comprising an inner annular rotating portion mounted on said drive shaft and an outer fixed annular portion coupled to said inner portion and mounted on said support, first and second flow passages being formed in the mating surfaces between said rotating and fixed portions, a source of hydraulic pressure, and at least two pipes connected from one of said flow passages to said hydraulic source through said fixed portion and from the other of said flow passages to said hydraulic motor through said rotating portion, respectively.

4,061,290
EXTENSION CORD REEL AND CASE
Thomas D. Harrill, Rte. 1, Mabank, Tex. 75147
Filed May 13, 1976, Ser. No. 686,671
Int. Cl.^{2} B65H *75/40*
U.S. Cl. 242—96 **8 Claims**

4. An extension cord reel construction including a hollow body having opposite ends, one end of said body being open and the other end of said body including a closure end wall, a generally, centrally disposed stub shaft portion supported and projecting inwardly from said closure end wall toward the open end of said body, a wire spool including an elongated central core supporting fixed inner flange means at one end projecting radially outwardly from said core, said core defining a central journal portion opening axially outwardly of said one end of said core and journaled on said stub shaft portion with said flange means closely opposing the inner surface of said closure end wall, the other end of said core being hollow and including second radially outwardly projecting flange means supported therefrom substantially closing but rotatably received in said one end of said body and having a central opening therethrough opening into the hollow other end of said core, said body including one side wall portion having an opening formed therethrough for slidably receiving one end of an extension cord wound on said core therethrough, said core having an opening formed therethrough between said flange means opening into said hollow other end of said core for receiving the other end of said cord therethrough, whereby

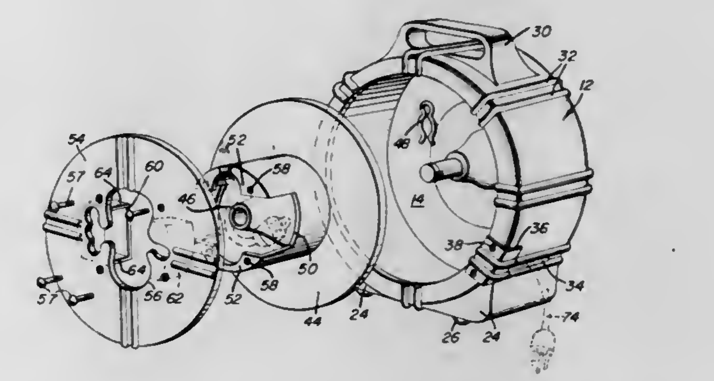

said other cord end may be projected outwardly through said other end of said core and the central opening in said second flange means, a crank handle, means pivotally mounting said crank handle from said second flange means for movement between an inoperative position recessed inwardly of said central opening and an extended position projecting outwardly of said central opening and spaced radially outwardly of the axis of rotation of said core relative to said stub shaft portion, said second flange means including an inwardly projecting portion removably secured to said core for rotation therewith and from which said crank handle is pivotally supported.

4,061,291
VARIABLE TORQUE DRIVE
Douglas James Cunningham, Steep Marsh near Petersfield, England, assignor to Wingard Limited, Chichester, England
Filed Aug. 31, 1976, Ser. No. 719,316
Int. Cl.^{2} A62B *35/02;* **B65H** *75/48*
U.S. Cl. 242—107 **14 Claims**

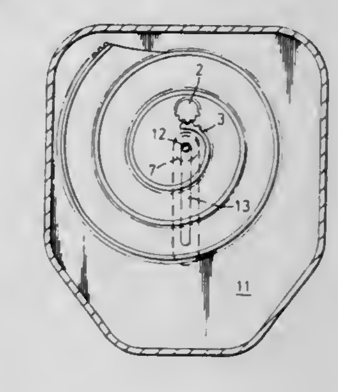

1. A safety belt reel comprising a coil spring, a shaft on which a safety belt is stored and a variable torque device coupling said spring to said shaft; said variable torque device including at least one spiral body, driven means coupled to said shaft and driveably engaged with said body, slotted support means, said spiral body being mounted for translational movement in said slotted support means, which translational movement takes place when said spring is wound or unwound by withdrawal and retraction of said belt, said translational movement causing a change in the radius of action of a couple acting between said spring and said shaft whereby the output torque of said device is varied to adjust the force exerted on said belt.

4,061,292

BI-DIRECTIONAL ROTARY DRIVE MECHANISM

James C. Whitney, Fairfield, Conn., assignor to Dictaphone Corporation, Rye, N.Y.

Filed Apr. 20, 1976, Ser. No. 678,704

Int. Cl.² G03B *1/04*; G11B *15/32*

U.S. Cl. 242—201 15 Claims

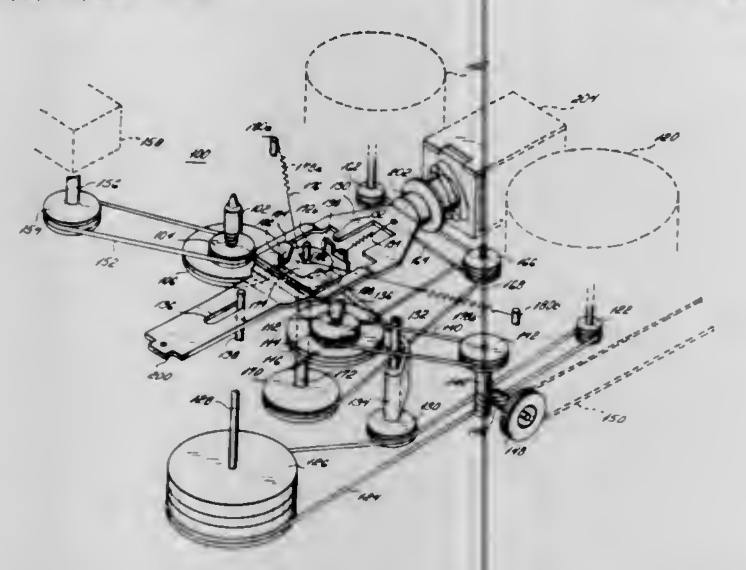

6. Apparatus for bi-directionally moving a web of material between first and second reels, comprising: a first spindle for driving said first reel in a first direction; a second spindle for driving said second reel in an opposite direction; a first rotary member on said first spindle having a rim adapted to be frictionally driven; a second rotary member on said second spindle having a rim adapted to be frictionally driven; drive roll means having a drive shaft and a peripheral surface for selectively contacting said rim of said first rotary member on said first spindle and said rim of said second rotary member on said second spindle; means for selectively bi-directionally driving said drive shaft, said bi-directional driving means comprising a bi-directional motor coupled to said drive shaft for rotating said drive shaft in one and opposite directions, respectively; a tensioned string member having an intermediate portion thereof deployed about said drive shaft, said drive shaft being displaced along said string member toward a first position in driving contact with said rim of said first rotary member on said first spindle when said drive shaft is rotated in said one direction and toward a second position in driving contact with said rim of said second rotary member on said second spindle when said drive shaft is rotated in said opposite direction thereby to drive said first spindle in one direction when said drive shaft is in said first position and to drive said second spindle in the opposite direction when said drive shaft is in said second position; a solenoid having an armature; a link member coupled to said armature and movable therewith; and stop means coupled to said link member and selectively disposable in the displacement path of said drive shaft to prevent said drive shaft, when said stop means is disposed in the displacement path of said drive shaft, from being displaced for said drive roll means to effectively drive said first and second spindles.

4,061,293

BALLOON WITH MANUALLY OPERABLE HELICOPTER BLADES

Kenneth K. Lo, Richmond, Canada, assignor to The Raymond Lee Organization, Inc., New York, N.Y., a part interest

Filed Mar. 9, 1977, Ser. No. 775,709

Int. Cl.² B64B *1/32*

U.S. Cl. 244—26 2 Claims

1. An aircraft, comprising

a balloon filled with buoyant gas for providing the major part of the required lift;

a pair of spaced rings at approximately the vertical center of the balloon supported by a rigging having a plurality of lines supported by the upper half of the balloon;

a pair of helicopter torque-balancing blade units each unit rotatably mounted on a corresponding one of the rings;

a frame capable of body movement between central and forward positions supported by the rigging beneath the balloon, said frame having a passenger's bicycle type seat mounted thereon, a pedal-operated sprocket wheel rotatably mounted thereon and a plurality of landing wheels rotatably mounted thereon;

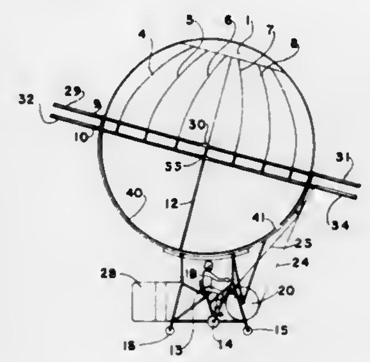

coupling means coupling the sprocket wheel to the helicopter blade units in a manner whereby a passenger seated in the seat and pedalling the sprocket wheel in any position between the central and forward positions contrarotates said blade units for providing additional lift and forward propulsive force; and

rudder means movably mounted on the frame and controlled in direction by the passenger for directing the craft in flight.

4,061,294

AIRCRAFT WHEEL ROTATOR

St. Elmo Hawkins, 107 Preston Road, Lynchburg, Va. 24502

Filed Jan. 21, 1977, Ser. No. 761,498

Int. Cl.² B64C *25/36*

U.S. Cl. 244—103 S 2 Claims

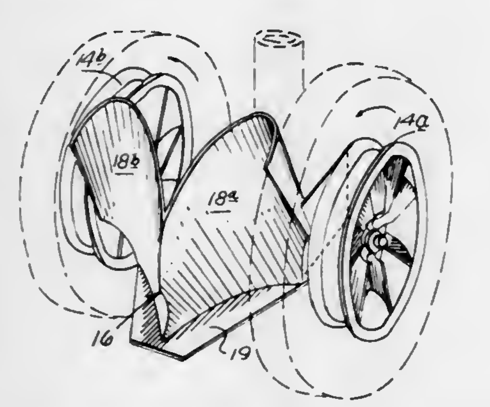

1. An aircraft wheel rotator for spinning up wheels having spokes prior to landing comprising: an air collector having an inwardly concave front edge with upper and lower terminal portions, said lower terminal portion connected to a rearwardly extending substantially flat plate, said air collector extending above and connected to said plate having a substantially conical configuration and having an open portion extending from the rearwardly disposed tip of the cone to said front edge so that air trapped between said flat plate and said air collector accelerates towards said tip of said cone and impinges upon the spokes of said wheel causing said wheel to spin up.

4,061,295

SHOCK ABSORBING METHOD AND APPARATUS

Paul T. Somm, Bellevue, Wash., assignor to The Boeing Company, Seattle, Wash.

Filed Dec. 22, 1975, Ser. No. 642,788

Int. Cl.² B64C *25/58*

U.S. Cl. 244—104 FP 7 Claims

2. An apparatus for damping reactive displacement oscillations of a sprung mass in a system including a spring shock absorber interposed between the sprung mass and an unsprung mass, wherein such oscillations occur in response to an impact force applied to the unsprung mass and transmitted to the sprung mass through the spring shock absorber, comprising:

controllable damping means for providing a first damping mode having a first damping coefficient and for providing a second damping mode having a second damping coefficient that is substantially greater than said first damping coefficient;

sensing means for sensing the application of an impact force to the unsprung mass; and

control means for initially causing said damping means to assume said first damping mode and for responding to said sensing means for causing said damping means to assume said second damping mode after a time delay from said application of an impact force to the unsprung mass, said control means including a delay means for causing the

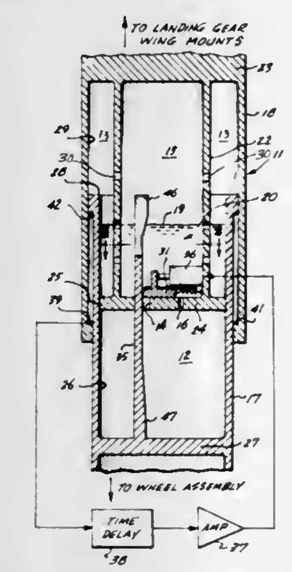

duration of said time delay to substantially equal the time interval required for the sprung mass to complete a first cycle of its reactive displacement oscillations.

6. In a method of absorbing the impact of a force, abruptly applied to a mass, by interposing a spring between the applied force and the mass such that the spring undergoes oscillatory displacement in reaction to the abruptly applied force and wherein the amplitude of such displacement decays with time, the improvement comprising:

sensing the application of said applied force;

initially damping the displacement of the spring with a damping coefficient that has a first predetermined value;

after a predetermined time delay from the step of sensing, damping the displacement of the spring with a damping coefficient that has a second predetermined value that is greater than the first value; and,

said time delay being substantially equal to the time interval that is defined by the time duration required for the spring to complete a first cycle of said oscillatory displacement.

4,061,296

BRAKING SYSTEM FOR SKI OR FLOAT EQUIPPED AIRCRAFT

John Kubek, Newberg, Oreg., assignor to Andrew Kubek, Sr., Taylor, Mich., a part interest

Filed Dec. 18, 1975, Ser. No. 641,921

Int. Cl.² B64C *25/42*

U.S. Cl. 244—112 6 Claims

1. A braking system attachment for an aircraft equipped with landing gear structure comprising: means for landing on water in one of its various forms attached to the landing gear structure, a pivotally mounted brake member including a generally planar brake element, mounting structure means for attachment of said brake member to the landing gear structure, a hydraulic actuated slave cylinder mounted on said mounting structure, means for actuating the brake member from the slave cylinder, and non-hydraulic return means for the brake member to keep same in a non-actuated and non-braking position, the means for actuating the brake member from the slave cylinder including a pin connected directly to the piston of the slave cylinder and an elongated cam slot provided in the brake member for direct actuation by said pin, said cam slot compris-

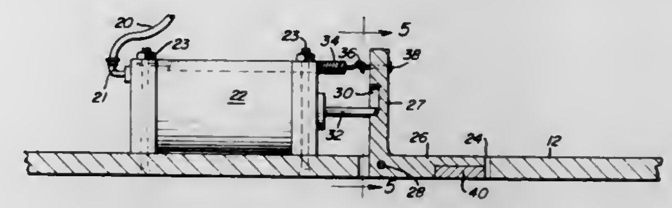

ing an elongated groove formed in and extending lengthwise of an arm portion of the brake member extending at generally right angles relative to the brake element and the pivot axis of said brake member, said pivot means including pivot pin means supporting the brake member at the juncture of the arm portion and brake element.

4,061,297

APPROACH RANGE MONITOR

George B. Foster, Worthington, Ohio, assignor to AirData Inc., Worthington, Ohio

Filed June 6, 1975, Ser. No. 584,407

Int. Cl.² G05D *1/12*

U.S. Cl. 244—184 5 Claims

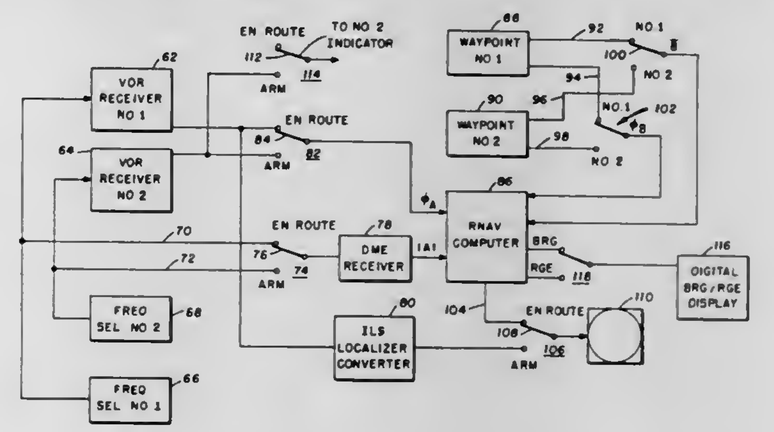

1. In an aircraft navigation system having first and second NAV receivers, at least one DME receiver, a localizer converter, a left-right steering display, and an RNAV computer, means to select reception of range and bearing to Waypoint information signals to a Waypoint station and means responsive to the range and bearing to Waypoint information signals to display said range and/or bearing of the aircraft to the selected Waypoint, the improvement comprising first switch means for selectively coupling said first or second receiver to the RNAV computer; means coupling said DME receiver to said RNAV computer; means coupling said first NAV receiver to said localizer converter; and second switch means simultaneously operable with said first switch means for selectively coupling the output of said RNAV computer or said localizer converter to said steering display, said first NAV receiver being coupled to said RNAV computer when said RNAV computer output is connected to said steering indicator and said second NAV receiver being connected to said RNAV computer when said localizer converter output is connected to said steering display, and wherein said range and bearing to Waypoint is displayed when said second NAV receiver is connected to said RNAV.

4,061,298
CENTRALLY ANCHORED ALIGNING DEVICE FOR MACHINES
Hubert Reinhard Kober, Leverkusen, Germany, assignor to Fixatorenbau Bertuch & Co. GmbH, Leverkusen, Germany
Filed Jan. 12, 1977, Ser. No. 758,644
Claims priority, application Germany, Jan. 14, 1976, 2601168
Int. Cl.² F16M *5/00*
U.S. Cl. 248—23 **23 Claims**

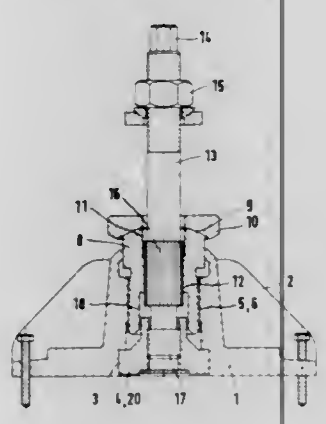

1. In an aligning device for machines of the type in which a threaded portion of a support body for supporting a machine pedestal is threadedly guided in a threaded portion of a base body anchored to or in the ground and is penetrated centrally through an internal bore therein by a tension rod, and the support body being arranged to be vertically adjusted also with the machine placed thereon, the improvement comprising:
entrainment means for interengaging said tension rod and said support body;
a threaded portion on said tension rod below said entrainment means;
a threaded sleeve mounted in said base body and arranged coaxial with respect to said tension rod, said threaded portion on said tension rod being threadedly guided in said threaded sleeve; and
the thread of said threaded portion of said tension rod having the same pitch as the thread of the threaded portion of said support body.

4,061,299
CORD CLAMP
Mutsuo Kurosaki, Moriguchi, Japan, assignor to Nifco Inc., Tokyo, Japan
Filed May 3, 1976, Ser. No. 682,289
Claims priority, application Japan, May 6, 1975, 50-59732
Int. Cl.² F16L *3/08*
U.S. Cl. 248—73 **6 Claims**

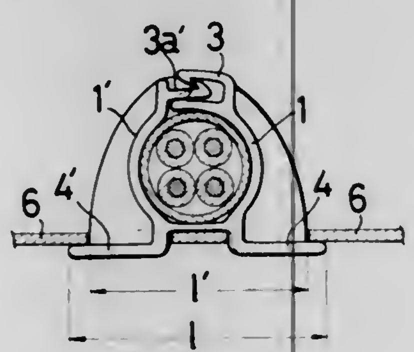

1. A one-piece plastic cord clamp, which comprises a pair of opposed, substantially rigid arcuate holding members, a hinge portion connecting the lower ends of said pair of holding members, said pair of holding members and said hinge portion being so disposed as to form a main clamp body, a pair of mutually engageable pawls formed one each at the upper ends of said pair of holding members, and a pair of leg members formed one each at the lower ends of said holding members and adapted to initially protrude outwardly therefrom in an angularly diverging relation so that said leg members converge about said hinge portion as a fulcrum when said engaging pawls are opened and the leg members flex about said fulcrum into a substantially co-planar, oppositely extending relationship when the engaging pawls are closed into fast mutual engagement, said pawls including a female portion at the upper end of one holding member and a male portion at the upper end of the other holding member, said female portion including laterally spaced hook means projecting into the mouth of said female portion and said male portion including oppositely facing laterally spaced shoulder means for engaging said hook means whereby said holding portions are positively locked by said male and female portions against both lateral and circumferential openings.

4,061,300
APPARATUS FOR STOPPING AND RELEASING THE MOVEMENT OF A SLIDING UP-AND-DOWN POLE OF A PORTABLE MOTION PICTURE SCREEN STAND
Sasuke Takahashi, 11-34, Yasunakacho-6-Chome, Yao, Osaka, Japan
Filed Jan. 3, 1977, Ser. No. 756,420
Claims priority, application Japan, Oct. 14, 1976, 51-123567
Int. Cl.² F16M *11/38*
U.S. Cl. 248—125 **1 Claim**

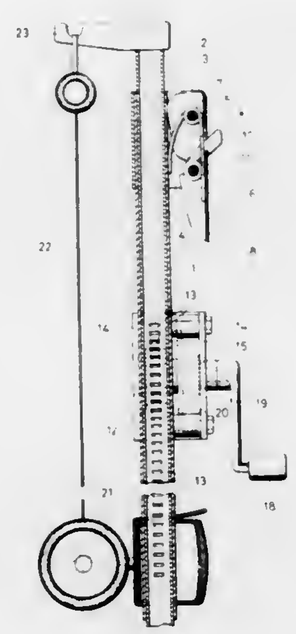

1. An apparatus for raising and lowering a windable portable motion picture screen comprising:
hollow support stand means for supporting said motion picture screen thereon, said support stand means having an opening at the top thereof;
support pole means positioned through said top hole of said support stand means and vertically movable therein for extending upward from said stand means and supporting said screen thereon when said screen is unwound;
lever means mounted on said hollow support stand means and engageable with said support pole means for locking said support pole means in position within said hollow stand means, said lever means comprised of:
a support surrounding said support stand means,
a lever member pivotally mounted on said support and engageable with said support pole means in said support stand means, said lever having an opening therethrough,
a hook member means pivotally mounted on said support and extending through said opening in said lever member and engageable with said lever member for locking said lever member away from said support pole means, and
spring means surrounding said first shaft and in contact with said lever for continuously biasing said lever toward said support pole means;
said support pole means has a geared rack portion on one side thereof; and
rotatable rack and pinion means attached to said support stand means and operatively engaging said geared rack of said support pole means for rotating and moving said support pole means upward and downward, said rack and pinion means comprised of:
support plates mounted on said support stand means,
a first shaft rotatably mounted through said support plates,
a first pinion connected concentrically with said first shaft and engageable with said geared rack portion of said support pole means,
an internal gear mounted concentrically with said first shaft and rotatable therewith,
a second shaft rotatably mounted through at least one of said support plates,
a second pinion connected concentrically with said second shaft and engaging said internal gear mounted on said first shaft, and
handle means connected to said second shaft for rotating said second shaft, whereby turning said handle means causes said second shaft and second pinion to rotate and in turn rotate said internal gear engaging said second pinion, thus rotating said first shaft connected to said internal gear and in turn rotating said first pinion engaging said geared rack portion of said support pole means, thereby moving said support pole means in said hollow support stand means.

4,061,301
POLE INSERTER
Raymond Catena, Jr., 242 Highland Ave., Kearny, N.J. 07032
Filed Feb. 9, 1977, Ser. No. 766,889
Int. Cl.² A45F *3/44*
U.S. Cl. 248—156 **3 Claims**

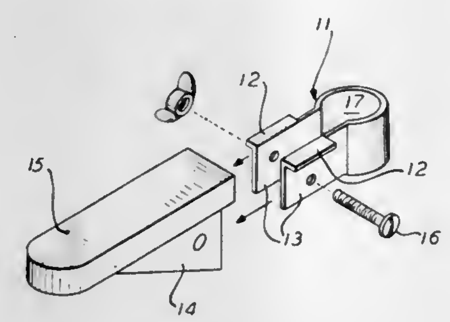

1. A pole inserter comprising:
a. an elongated generally rectangular strap,
b. off-set edge portions at each end of the strap, disposed in general perpendicularity to the strap, and defining a support for a pedal,
c. the ends of the strap folded toward each other and disposed in spaced relationship to each other, with the off-set portions extending away from each other on the strap when so folded,
d. a brace positioned between the ends of the strap and having a generally flat vertical portion,
e. a flange on the top of the brace defining a pedal, and seated on the off-set portions of the strap,
f. a holding means passed through the brace and the strap to capture the brace and strap together when it is tightened,
g. a space defined between the strap and the flat vertical portion of the brace dimensioned to receive a pole in tight engagement when the holding means is tightened,
h. the end on the brace tightly engaged with the pole.

4,061,302
MOUNT
Terry Boone, 1343 N. Peach Ave., Fresno, Calif. 93727
Filed Nov. 5, 1976, Ser. No. 739,529
Int. Cl.² F16M *11/38*
U.S. Cl. 248—170 **5 Claims**

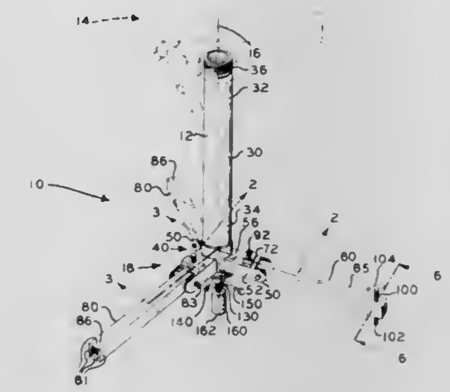

1. A mount for a load directed toward a support surface along a load axis extending substantially perpendicular to said surface, comprising:
A. a pedestal characterized by a centrally disposed load axis, a mounting portion adapted to receive an instrument package, and a base portion adapted to be disposed in juxtaposition with a support surface;
B. a plurality of uniformly spaced stabilizing legs pivotally connected to the base portion of the pedestal and extending radially therefrom for engaging the support surface; and
C. a load transfer member mounted on the base portion of the pedestal and extended coaxially therefrom for bearing against the support surface comprising a foot for engaging the support surface, means for interconnecting the foot in a load transferring, spatial relationship with the base portion of the pedestal including clamping means for securing the legs in a stabilizing position in which the legs extend in angular relation with said load axis, means for varying said spatial relationship, and securing means for maintaining the foot in said spatial relationship with the base portion of the pedestal.

4,061,303
APPARATUS FOR RETRACTING A RETRACTABLE PROTRUSION
Bryan George Ridgway, Sandbach, England, assignor to Rolls-Royce Motors Limited, Crewe, England
Filed Oct. 28, 1976, Ser. No. 736,500
Claims priority, application United Kingdom, Nov. 8, 1975, 46293/75
Int. Cl.² B60R *27/00*
U.S. Cl. 248—204 **15 Claims**

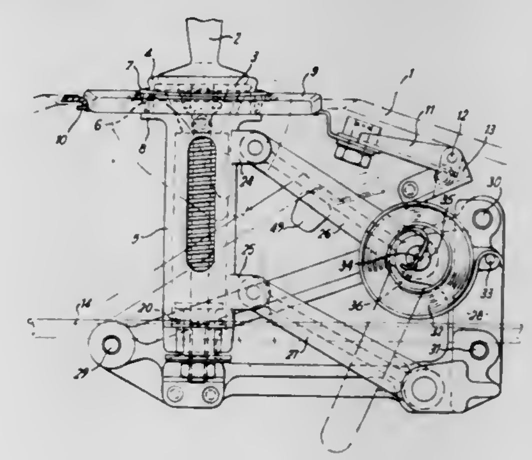

1. An apparatus for retracting a retractable protrusion through an aperture in a housing at least partially into the housing from which it extends, said apparatus comprising:

a base member fixedly connected to said housing;
a support member for said protrusion, said support member being pivotally connected to said base member;
first spring means urging said support member in one angular direction relative to said base member;
detent means operative to restrain movement of said support member in said one angular direction;
an actuating member operatively connected to said protrusion and mounted for movement relative to said support member; and
second spring means constrained between said support member and said actuating member, whereby movement of said actuating member relative to said support member against action of said second spring means causes release of said detent means to enable movement of said support member in said one angular direction.

4,061,304
SURGICAL CHAIR FOR A DOCTOR
Kurt Schattmaier, Zurich, Switzerland, assignor to Contraves AG, Zurich, Switzerland
Filed Aug. 25, 1976, Ser. No. 717,657
Claims priority, application Switzerland, Sept. 30, 1975, 12634/75
Int. Cl.² F16M *11/00*
U.S. Cl. 248—404 **5 Claims**

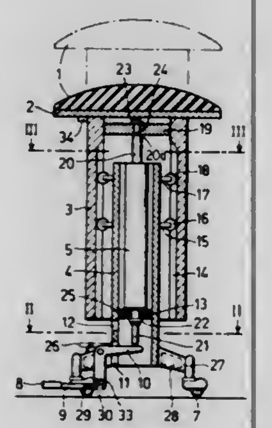

1. In a surgical chair for a treating physician, comprising an infinitely elevationally adjustable seat, a support column at which there is secured the seat, a stand tube arranged within the support column, a base frame having rollers connected with the stand tube, a lifting device arranged within the stand tube and operatively connected with the support column, a lever system for unblocking the lifting device, so that the seat, depending upon the load applied thereto, is elevationally adjustable, the improvement comprising:
a. the infinitely adjustable seat being non-rotatably mounted at the support column;
b. the base frame having a plurality of overhang arm members;
c. the lifting device having a plunger;
d. an angle lever pivotably mounted at the stand tube and acting upon said plunger;
e. a foot pedal having an upper edge;
f. means mounting the foot pedal with its upper edge at most 4 centimeters above the floor and symmetrically disposed between two overhang arm members of the base frame and with adjustable freedom of movement with respect to the floor;
g. a lever for connecting the foot pedal with the angle lever;
h. at least three guide grooves provided at the support column, said guide grooves being substantially uniformly distributed about the inner periphery of the support column and extending substantially parallel to the central axis of said support column;
i. at least three respective superimposed spaced rollers secured to the outer periphery of the stand tube and operatively associated with the guide grooves; and
j. said surgical chair, during its normal position of use, having said foot pedal between the legs of the user, said non-rotatable seat safeguarding against undesirable shifting of the body of the user relative to the foot pedal, to thereby ensure that said foot pedal is maintained between the legs of the user, and wherein the user can carry out elevational adjustment of the non-rotatable seat at such time that the buttocks of the user are located directly over the seat of the surgical chair and with both legs of the user supported on the floor and with one leg actuating the foot pedal by the heel portion of such actuating leg through the ankle joint thereof.

4,061,305
FOLDABLE, PORTABLE SUPPORT STAND
Gerald Beekenkamp, Etobicoke, Canada, assignor to The Black and Decker Manufacturing Company, Towson, Md.
Filed Oct. 4, 1976, Ser. No. 728,939
Int. Cl.² F16M *11/38*
U.S. Cl. 248—432 **17 Claims**

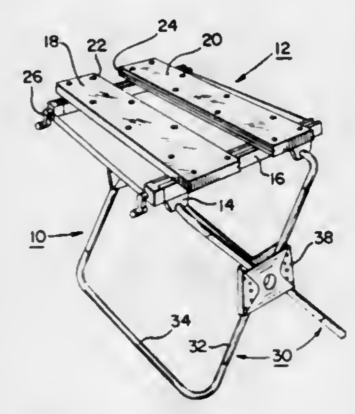

1. A foldable support stand comprising:
a pair of substantially rigid frames, each frame including a spaced apart pair of end legs and at least one longitudinally extending member, said end legs and said at least one longitudinally extending member being interconnected together to provide said frame with a predetermined configuration, said end legs of one said frame being in a cross-over relationship with the adjacent end legs of the other said frame, each of said end legs having a bight portion therein with the bight portions of the end legs of one of said frames being in mating relation with respective bight portions of the end legs of the other said frame to form first and second sets of mated bight portions and
first and second holding means corresponding to said first and second sets of mated bight portions, respectively, for embracing and clasping the mated bight portions together to maintain said mated bight portions in said mating relation and to conjointly define therewith a pivot joint permitting pivotal movement of said frames relative to one another between a folded position wherein said frames are in juxtaposition with one another and an open support position wherein said frames are angularly arranged relative to one another, and
limit means for defining the open support position of one said frame relative to the other.

4,061,306
DECORATION PLATFORM ASSEMBLY
Robert T. Taylor, 1693 Perrysville Ave., Pittsburgh, Pa. 15212
Filed Nov. 22, 1976, Ser. No. 743,709
Int. Cl.² A47G *33/12*
U.S. Cl. 248—523 **6 Claims**

1. An ornamental decoration platform assembly, comprising base member means having an ornamental decoration on its upper surface and having its bottom surface constructed to stably rest on a flat surface;
socket means for receiving and securing a stem member, the outer surface of said socket means forming part of said upper surface of said base member;

said socket means including within its confines a tubular member guide means for positioning a stem member generally centrally of said tubular member, retractable and expandable locking means constructed and arranged to surround a stem member for engaging and locking it in fixed relationship with said tubular member; and

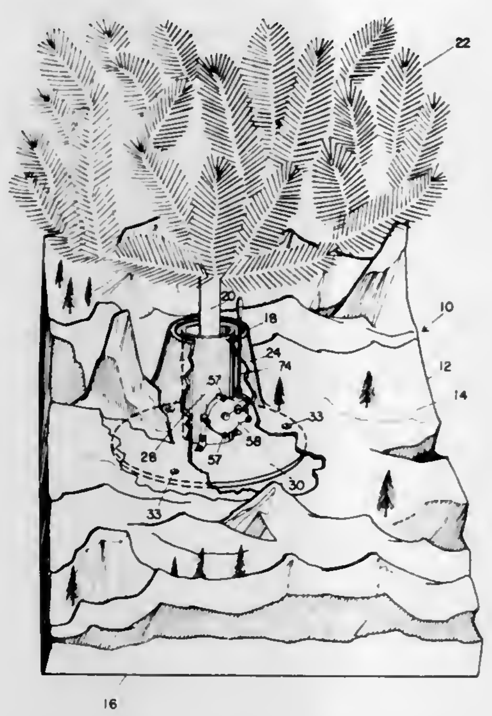

actuator means operative with said locking means for selectively actuating said locking means between locked and unlocked positions, said actuator means having at least a portion thereof disposed externally of said ornamental decoration and constructed and arranged for being operatively manipulated at a position above the surface of said ornamental decoration.

4,061,307
BALL VALVE
Kiwamu Yoshiike, and Hitoshi Yazaki, both of Tokyo, Japan, assignors to Kitazawa Shoji Kabushiki Kaisha, Japan
Filed Jan. 7, 1976, Ser. No. 647,003
Claims priority, application Japan, June 6, 1975, 50-68428
Int. Cl.² F16K *5/00*
U.S. Cl. 251—315 **1 Claim**

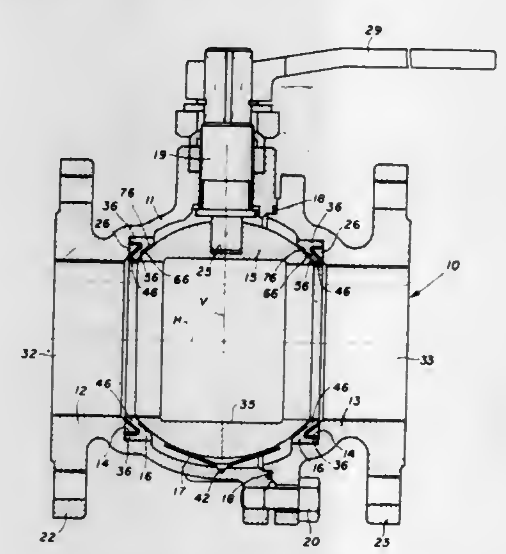

1. A ball valve comprising a plurality of outer casing elements adapted to form together an outer casing in which a movable valve body is accommodated, accommodation of said movable valve body in said outer casing being achieved by coupling said plurality of outer casing elements, a valve operating shaft journaled by said outer casing elements so as to rotate said movable valve body, an annular sealing member interposed between said movable valve body and outer casing elements to effect sealing and interception therebetween, and a resilient supporting member comprising a cone spring located on the inner bottom surface of said outer casing and having a concavo-conical surface embracingly engaging a convexo-spheric outer surface of said movable valve body so that said cone spring is burdened with the load of said movable valve body placed thereon and the surface along which said sealing member is in close contact with said movable valve body is free from influence by said load of the movable valve body, said cone spring also having an axis coincident with the rotary axis of said movable valve body, an apex received in a seat in said outer casing elements for providing substantially point contact therewith, and a plurality of slots extending from its outer periphery to associated apertures in said cone spring adjacent the center thereof.

4,061,308
SPRING MANIPULATING DEVICE
Roy B. Ghent, R.R. 1 Longacre, Marietta, Ohio 45750
Filed Dec. 30, 1976, Ser. No. 755,856
Int. Cl.² B23P *19/04*
U.S. Cl. 254—10.5 **7 Claims**

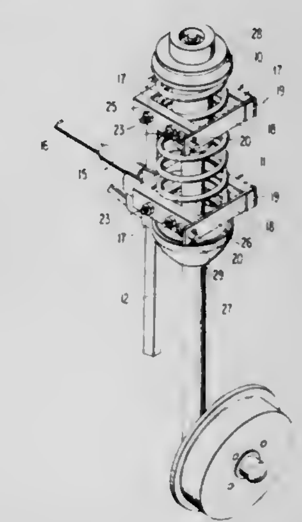

1. A spring manipulating device comprising a standard, a jack mechanism connected with the standard for movement relative to the standard, a first spring retaining frame fixed to the standard, and a second spring retaining frame fixed to the jack mechanism, each frame being of rectangular form and having one open side and each frame defining a channel passage around three sides thereof adapted to receive a spring coil, and a closure plate for the open side of each frame adapted to cover said open side and retain the spring coil engaged with the frame.

4,061,309
VEHICLE LEVELING SYSTEM AND DEVICE THEREFOR
Paul Edmond Hanser, Moline, Ill., assignor to HWH Corporation, Rock Island, Ill.
Filed Nov. 23, 1976, Ser. No. 744,240
Int. Cl. B66f *3/24*
U.S. Cl. 254—86 H **19 Claims**

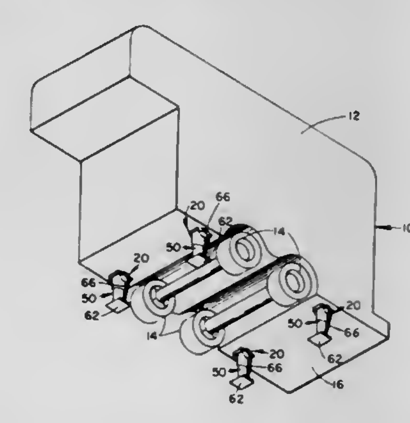

1. A device for use in a system of leveling a trailer, camper,

truck or other similar vehicle relative to the terrain on which it is standing, said device comprising

A. a support assembly mounted on the lower portion of said vehicle for rotative movement thereon between an upper storage position and a lower operating position, said support assembly providing
 i. a first power unit defining a first chamber from which a first plunger is axially extendable in one direction to rotate said assembly from its upper to its lower position and
 ii. a second power unit fixed relative to said first power unit and defining a second chamber from which a second plunger is axially extendable in another direction to engage said terrain after said assembly has been rotated to its lower position,
B. means for sequentially extending said first plunger and then said second plunger, said extending means comprising
 i. a port opening into said first chamber,
 ii. a passage communicating between said first and second chambers,
 iii. means for isolating said port from said passage when said first plunger is retracted,
 iv. a power fluid,
 v. means for selectively delivering said power fluid into said first chamber through said port to move said first plunger from its retracted to its extended position,
 vi. means for bypassing said isolating means after extension of said first plunger, said bypass means diverting fluid from said first chamber through said first plunger and said passage and into said second chamber to move said second plunger from its retracted position to its extended position, and
C. means for retracting said plungers and rotating said assembly to its upper position upon rendering said extending means ineffective.

4,061,310

LIFTING CUSHION FOR THE LIFTING, SUPPORTING AND MOVING OF HEAVY OBJECTS

Manfred Vetter, Burg Langendorf, Zulpich-Langendorf, Germany (5351)

Filed Oct. 20, 1976, Ser. No. 734,156

Claims priority, application Germany, Oct. 20, 1975, 7533295

Int. Cl.² B66F *3/24*

U.S. Cl. 254—93 HP **14 Claims**

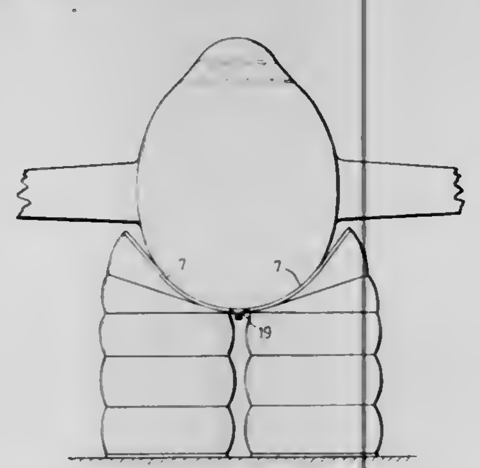

1. A lifting cushion apparatus having a top and bottom, said apparatus comprising:
 a base plate for supporting said apparatus, said base plate including a bottom surface equipped with traction means thereon;
 a plurality of inflatable chambers each located one above the other, at least one of said chambers comprising a first wedge chamber which will assume a wedge-like shape when inflated, said wedge chamber having a narrow end and a thick end;
 at least two independent inflation valve means for independently inflating at least two of said chambers; and,
 a flexible head plate attached to the top of said apparatus and adapted to mold itself to the contour of the surface of the object to be lifted.

4,061,311

AIR HOIST AND ITS CONTROL DEVICE

Akitosi Yamasaki, Takatsuki; Kiyoshi Fukuyama, and Kazunori Miyauchi, both of Neyagawa, all of Japan, assignors to Tsubakimoto Chain Company, Osaka, Japan

Filed May 28, 1976, Ser. No. 691,670

Claims priority, application Japan, June 2, 1975, 50-65279; Nov. 14, 1975, 50-136312; Nov. 14, 1975, 50-136313

Int. Cl.² B66D *1/08*

U.S. Cl. 254—168 **10 Claims**

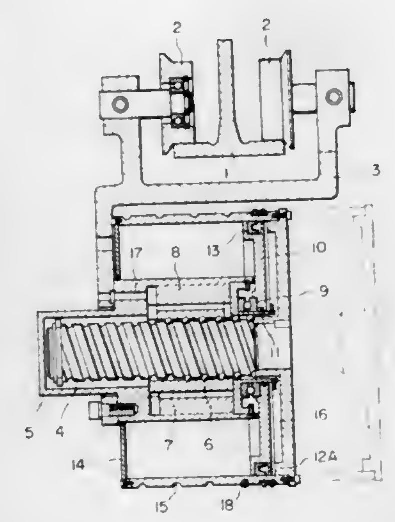

1. An air hoist, comprising a nonrotatable support member having a ball-screw mechanism supported thereon, said ball-screw mechanism including a rotatable and axially movable screw coacting through balls with a nut fixed to the support member, a piston rotatably fitted on the support member and having a first fluid seal therebetween, means connecting the piston to the support member for preventing axial displacement of the piston, a drum-cylinder surrounding and axially slidably engaging the piston with a second fluid seal being disposed therebetween, the drum-cylinder being fixed to the screw and having an end wall which is axially spaced from the piston for forming a pressure chamber therebetween, the drum-cylinder being adapted to have a flexible cable-like element wrapped therearound, and passage means communicating with said pressure chamber and through which pressurized fluid is introduced and discharged from the pressure chamber, whereby the drum-cylinder rotatingly and axially advances by the action of the ball-screw mechanism to take up a flexible cable-like element when the pressurized fluid is introduced into the pressure chamber, and reversely rotatingly and axially retreats, under the influence of the self-weight of the load, to pay off the cable-like element when the pressurized fluid is discharged from the pressure chamber.

4,061,312

APPARATUS AND METHOD FOR PROTECTING WHEEL MOVE IRRIGATION SYSTEMS WITH ELECTRIFIED FENCE

Thomas S. Walchuk, Box 792, Ronan, Mont. 59864

Filed Oct. 20, 1976, Ser. No. 734,364

Int. Cl.² A01K *3/00;* **A01G** *25/09;* **H01B** *17/16*

U.S. Cl. 256—10 **8 Claims**

1. A protective system for wheel move irrigation systems which include an elongated conduit supported by, and extending through, the hubs of a plurality of ground-engaging sprinkler irrigation wheels, each of said wheels having a rim with a ground-engaging surface, comprising:
 a. a plurality of insulators having support means thereon to releasably engage an electrified fence wire, at least one of said insulators being releasably mounted on each of said sprinkler irrigation wheel rims; and
 b. at least a single electrified fence wire extending along the length of said irrigation system, said wire being supported along its length by said support means.

3. A clamp-on insulator comprising:
 a. an elongated base plate adapted to be mounted on a sprinkler irrigation wheel rim having a ground-engaging surface and a spoke-engaging surface, said base plate having a face portion, and two opposite end portions;
 b. electrified fence wire engaging means on said face portion;
 c. over-center clamping means comprising two cooperative clamping arms, each said arm having outer and inner portions, and a buckle element connected to said inner portions of each said clamping arm, each said wheel rim being disposed between said base plate and said clamping means when said insulator is mounted on said wheel rim; and
 d. means connecting said outer portion of each of said clamping arms with said respective opposite end portions of said base plate, one of said inner and outer portions of said clamping arms being releasably connected.

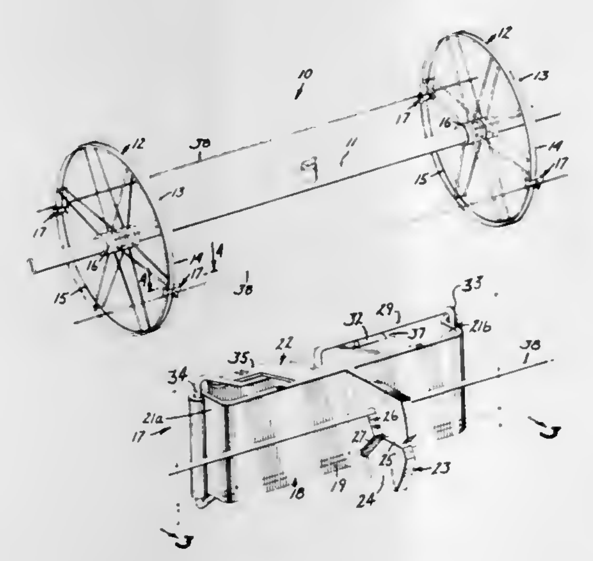

8. The method of protecting the sprinkler pipes of a wheel move irrigation system, in which a plurality of said pipes are flexibly connected to form a single conduit supported by, and extending through, the hubs of a plurality of sprinkler irrigation wheels having ground-engaging rims, from damage by cattle or other livestock rubbing against said pipes when grazing in a field wherein one of said systems is located, comprising the steps of:
 a. releasably mounting an insulator with a wire-engaging support means thereon on each said ground-engaging rim of each said wheel in said irrigation system on a side of said system from which direction cattle may approach, at such a height that, when a wire is strung along said system, engaging said support means, cattle or other livestock approaching said system come in contact with said wire;
 b. stringing an electric fence wire along said system;
 c. engaging said wire with said wire-engaging support means of each said insulator to support said wire along its length and restrain said wire from movement in relation to said system; and
 d. energizing said supported fence wire.

4,061,313

APPARATUS FOR THE STATIC MIXING OF FLOWABLE SUBSTANCES

Dieter Brauner, Solingen-Wald; Hans-Joachim Kaluza, Cologne, and Edgar Muschelknautz, Leverkusen, all of Germany, assignors to Bayer Aktiengesellschaft, Leverkusen, Germany

Filed June 28, 1976, Ser. No. 700,645

Claims priority, application Germany, July 19, 1975, 2532355

Int. Cl.² B01F *15/02*

U.S. Cl. 366—340 **5 Claims**

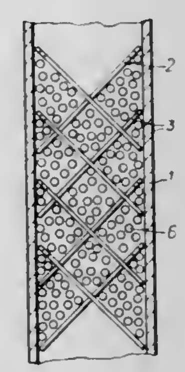

1. An apparatus for the static mixing of flowable substances, comprising a tubular housing having a mixing insert arranged therein consisting of a plurality of intersecting plates disposed cross-wise and inclined with respect to the longitudinal axis of the housing, each of said plates having a plurality of alternating webs and slots and packing material filling in the free spaces between the plates and the portion of the mixing insert surrounded by the housing.

4,061,314

INPUT SECTION OF APPARATUS FOR USE IN THE CONTINUOUS PRODUCTION OF DOUGHNUTS

Richard W. Schmader, 50 Myopia Road, Winchester, Mass. 01890

Filed Dec. 27, 1976, Ser. No. 754,184

Int. Cl.² B01F *15/04;* **A47J** *37/12;* **B67D** *5/62*

U.S. Cl. 366—145 **8 Claims**

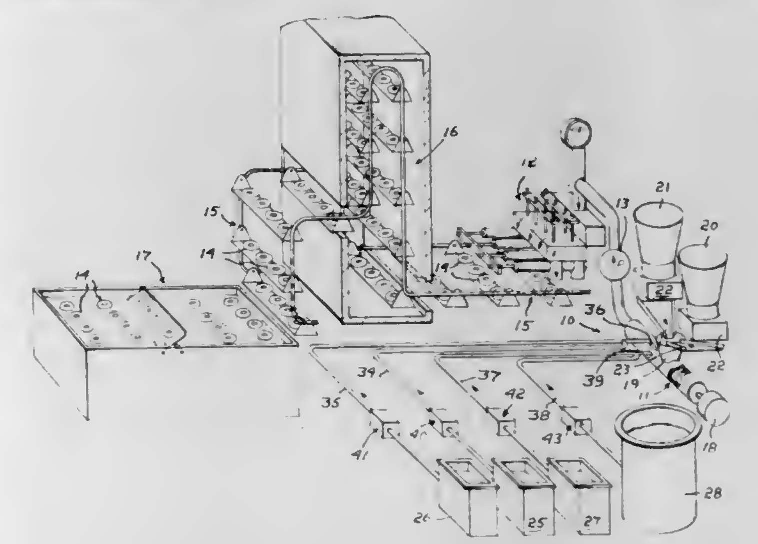

4. An input section for apparatus for use in the continuous production of dough of either one of two different types, said section including a blender, two containers, each for a dry ingredient for a particular one of said dough types and including a metering device, means to introduce either metered dry material into said blender, first and second oil containers, each for an oil appropriate for use with a particular one of said dry ingredients, a water container and a container for a yeast solution, thermostatically controlled means to refrigerate the water in said water container, thermostatically controlled means to refrigerate the yeast solution, outlet conduits, one for each container and including a metering pump, and said outlet conduits arranged in a manner such that both liquids for use

with each dry ingredient are in communication with the blender in the same relationship to the means by which the appropriate dry ingredient is introduced into the blender.

4,061,315
ORBITAL PLATFORM STIRRING SYSTEM
Vincent Elliott Eitzen, Evanston, and Robert Rockwell Moore, Glenview, both of Ill., assignors to American Hospital Supply Corporation, Evanston, Ill.
Filed June 16, 1976, Ser. No. 696,735
Int. Cl.² B01F *11/00*
U.S. Cl. 366—111 **17 Claims**

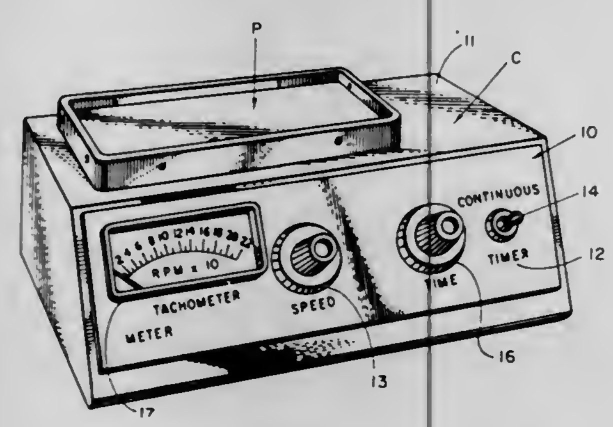

9. Stirring or vibrating apparatus comprising: a cabinet having a top panel; platform means on and above said cabinet for holding members; drive means, including a cam eccentrically connected beneath said platform for orbiting the same; bracket means within said cabinet; vibration-resistant mounting means for securing said bracket within said cabinet; a shaft; a drive motor mounted to said bracket means and coupled to said shaft to rotate the same; vibration-resistant coupler means for coupling said shaft to said cam, including a pair of laterally spaced resilient members connected to one of said shaft and cam and a channel shaped coupler straddling said resilient members and connected to the other of said shaft and cam whereby said cabinet and said platform are substantially free of noise transmission from said motor.

4,061,316
CARBON BLACK PELLETER
Oliver K. Austin, Bartlesville, Okla., assignor to Phillips Petroleum Company, Bartlesville, Okla.
Filed Aug. 16, 1976, Ser. No. 714,933
Int. Cl.² B01F *7/02*
U.S. Cl. 366—303 **11 Claims**

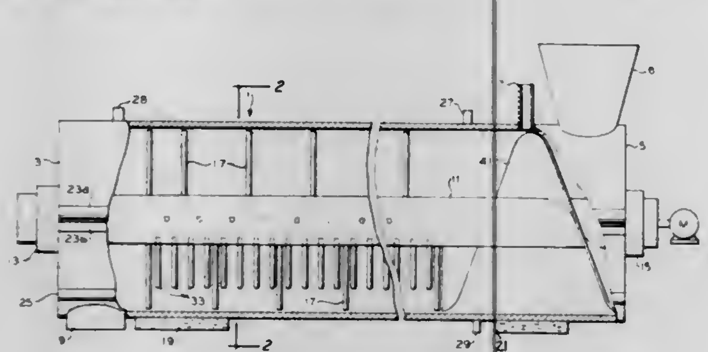

1. A carbon black pelleter comprising
a. a housing having an essentially cylindrically shaped internal surface,
b. a shaft coaxially and rotatably arranged within said housing,
c. a plurality of shaft pins attached to and extending essentially radially outwardly from said shaft,
d. a plurality of shell pins attached to and extending essentially radially inwardly from said housing,
with the further provision that
e. said shell pins are arranged in at least one row essentially parallel to the shaft axis,
f. all the shell pins are arranged in the lower half of the housing,
g. the shaft pins are arranged in such a pattern with respect to the shell pins that
aa. the shell pins do not touch the shaft pins during the rotation of the shaft,
bb. every shaft pin during one rotation of the shaft is at least once sandwiched between two shell pins,
cc. during the rotation of the shaft there occurs no more than about 1/6 of the total sandwiching of shaft pins between shell pins per shaft revolution at the same time.

4,061,317
BLAST FURNACE BOTTOM COOLING ARRANGEMENT
Sergei Mikhailovich Andoniev, prospekt Pravdy, 5, kv. 60; Boris Ruvimovich Granovsky, prospekt Lenina, 88, kv. 70; Leonid Davydovich Golod, prospekt Pravdy, 7, kv. 192; Gennady Alexandrovich Kudinov, prospekt Gagarina, 32, kv. 203; Grigory Ivanovich Kasyanov, prospekt Lenina, 64b, kv. 63; Oleg Vladimirovich Filipiev, prospekt Pravdy, 5, kv. 41b; Jury Ivanovich Tseluiko, prospekt Lenina, 17, kv. 55, and Evgeny Eliseevich Lysenko, Novgorodskaya ulitsa, 38/4, kv. 3, all of Kharkov, U.S.S.R.
Filed Feb. 23, 1977, Ser. No. 771,344
Int. Cl.² C21B *7/10*
U.S. Cl. 266—193 **7 Claims**

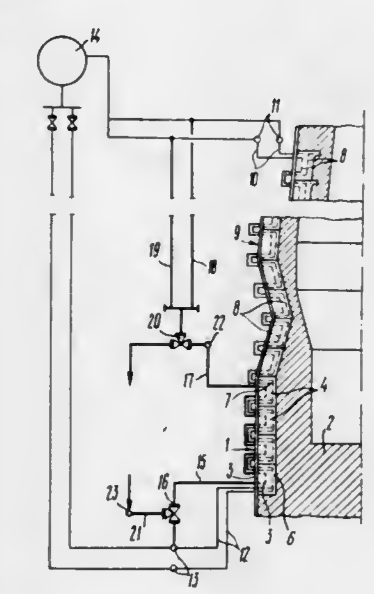

1. An arrangement for cooling the bottom portion of a blast furnace having a shell, which is lined with a refractory material and is divided into an upper and a bottom portion, plates, which are mounted in the furnace upper portion between the shell and the lining, and coil pipes incorporated in said plates and being situated in two vertical planes parallel to the furnace shell, comprising: plates mounted in said bottom portion of the furnace between the shell and lining thereof, said plates forming vertical and horizontal rows; coil plates situated in each of said plates in two vertical planes parallel to the furnace shell, there being at least two coil pipes in a first of said vertical planes and at least one coil pipe in a second of said vertical planes; said coil pipes in said first vertical plane of said plates mounted in the uppermost horizontal row being connected to said coil pipes of said plates situated in the upper portion of the furnace; cooling medium feed collectors of the furnace common cooling system controllably connected to said coil pipes provided in said plates mounted in the lowermost horizontal row; a high-pressure cooling medium collector controllably connected to said coil pipes in said second vertical plane of said plates mounted in the lowermost horizontal row; cooling medium return collectors of the furnace common cooling system controllably connected to said coil pipes in said first vertical plane of said plates mounted in the uppermost horizontal row and to said coil pipes provided in said plates in said furnace upper portion; and a high-pressure cooling medium receiver controllably connected to said coil pipes in said second vertical plane of said plates mounted in the uppermost horizontal row.

4,061,318
METALLURGICAL VESSEL
Howard M. Fisher, New Castle, Pa., assignor to Pennsylvania Engineering Corporation, Pittsburgh, Pa.
Filed Aug. 5, 1976, Ser. No. 711,733
Int. Cl.² C21C *5/46*
U.S. Cl. 266—246 **19 Claims**

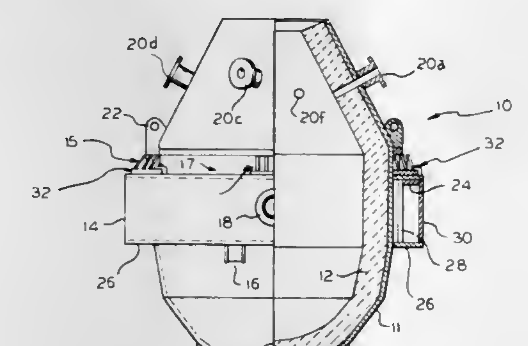

1. A refractory lined metallurgical vessel,
trunnion support means,
adapter means engageable with said trunnion support means,
a plurality of mounting means for affixing said vessel to said adapter means,
releasable coupling means for affixing said adapter means to said trunnion support means so that said vessel may be tilted to discharge metal therefrom, and
said releasable coupling means including a first plurality of member receiving means mounted on said adapter means and a second plurality of member receiving means on the trunnion support means, a plurality of members each mounted in the trunnion support for movement into and out of the member receiving means on the adapter means when the same are in alignment, one of said members being in operative orientation with one member receiving means of each of said trunnion support means and said adapter means in each of a plurality of relative angular positions of said adapter means and said trunnion support means, and releasable connector means associated with each of said members and being releasably engageable therewith to releasably secure said members in said aligned member receiving means,
said trunnion support means having hollow member receiving regions, said members being mounted in said trunnion support means for movement into and out of said member receiving means so that said members are movable out of said member receiving means and wholly into said trunnion support means whereby said vessel and adapter may be rotated about said second axis relative to said trunnion support means.

4,061,319
MOBILE TRUCK FOR RELINING A CONVERTER
Sadaharu Tanaka; Sadayuki Saito, and Sensaburo Hirano, all of Chiba, Japan, assignors to United States Steel Corporation, Pittsburgh, Pa.
Filed Aug. 27, 1976, Ser. No. 718,239
Claims priority, application Japan, Aug. 29, 1975, 50-118205[U]
Int. Cl.² C21C *5/44*
U.S. Cl. 266—281 **1 Claim**

1. In an organization for the pneumatic production of steel including a steelmaking converter having an upwardly opening mouth, a gas collecting hood over the mouth of said converter, means for removing at least the lowermost portion of said hood from its operative position over said converter mouth including a pair of rails straddling the converter mouth in superposed relation thereto, the improvement comprising:
a. a second pair of rails parallel to, but spaced below said mouth-straddling rails and extending to a position closely adjacent said converter;
b. a mobile truck including a frame of generally rectangular configuration;
c. said frame having wheels mounted thereon for engagement with both of said rail pairs;

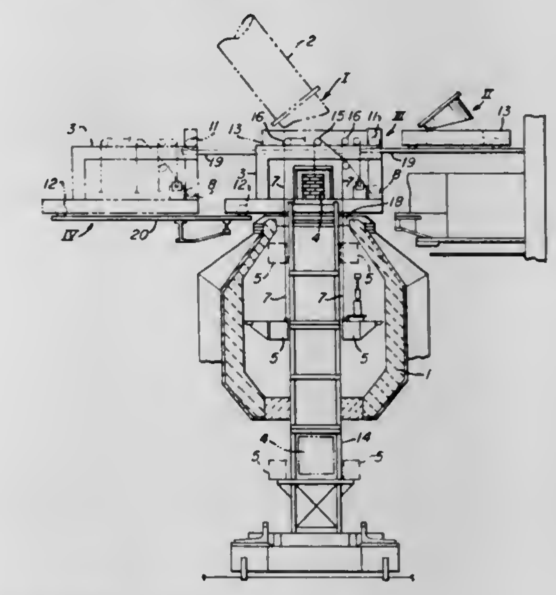

d. platform means carried by said truck;
e. winch means mounted on said truck and operatively connecting said platform means for raising and lowering the same to and from the interior of said converter when said truck is disposed in overlying relation to the mouth thereof; and
f. means for moving said truck into overlying relation to the mouth of said converter when said hood portion is removed therefrom.

4,061,320
TWO CYLINDER SHOCK ABSORBER SYSTEM
Joe Frank Warner, 504 Town Creek, Dallas, Tex. 75232
Filed May 3, 1976, Ser. No. 682,737
Int. Cl.² F16F *5/00;* B60G *15/08*
U.S. Cl. 267—64 R **3 Claims**

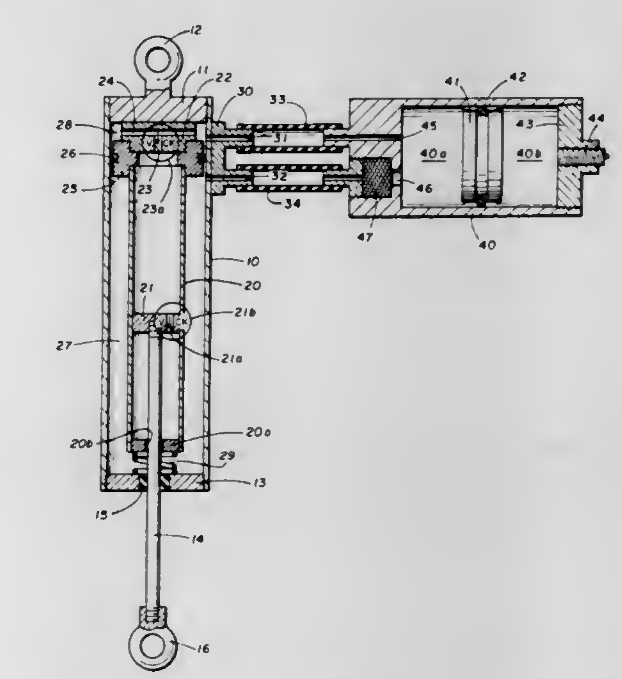

1. A shock absorber system comprising:
a. an outer cylinder having a top closure to be connected to a vehicle frame and a removable ported bottom closure;
b. a closed top inner cylinder slidably mounted coaxially in said outer cylinder and having a peripheral seal to the walls of said outer cylinder near the top thereof;
c. a spring between said inner cylinder and said bottom

closure to urge said inner cylinder toward said top closure;
d. a main piston in said inner cylinder having a piston rod extending down through said ported bottom closure in slidable fluid tight relation to be connected to a vehicle axle;
e. a cooling cylinder;
f. a flow line leading into said cooling cylinder from beneath said seal;
g. a return flow line leading from said cooling cylinder into said outer cylinder above said seal;
h. a check valve in the top of said inner cylinder for flow from above said seal into said inner cylinder;
i. a gas pressure positioned free piston in said cooling cylinder; and
j. structure including a check valve in said main piston for passing liquid from above said main piston to below main piston upon compression and for circulating fluid through said cooling cylinder upon expansion.

4,061,321
FRAME HOLDER
William Farr, 8445 S. Lawler Ave., Burbank, Ill. 60459
Filed Feb. 9, 1977, Ser. No. 766,901
Int. Cl.² B25B *1/20*
U.S. Cl. 269—41 **6 Claims**

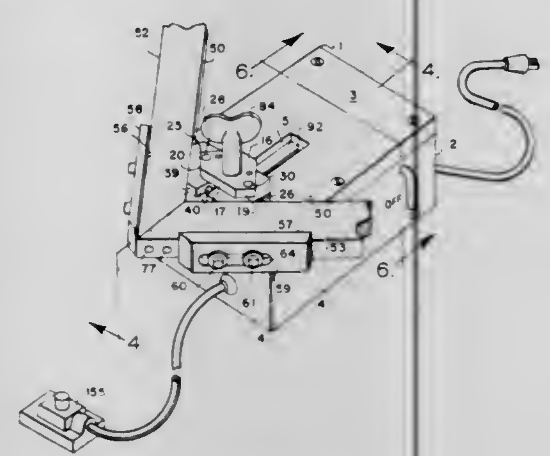

1. A clamp comprising opposing relatively movable sets of jaws having opposing clamping faces, at least one set of jaws comprising:
a support: jaw elements pivotally mounted on said support on axes generally parallel with said faces,
means yieldably biasing said jaw elements to a position disposing the clamping faces thereon in converging relation to the respective opposing faces,
and means for relatively advancing said one set of jaws relative to the other of said sets for clampingly engaging a work piece therebetween and pivoting the jaw elements to substantial parallelism with the opposing jaws and thus shifting the work pieces along the clamping faces, and a support mounting said clamp jaws, means connected to said one set of jaws carried by the support adjusting movement toward and away from the other of said sets of clamp jaws and comprising a pair of solenoids arranged in a toggle linkage interposed between the support and said one set of jaws for selectively clampingly locking said jaws against the work-piece and releasing the same.

4,061,322
JIG FOR ELECTRICAL CONDUIT STUBS
Mervin G. Le Blanc, 2405 Fazzio Road, Chalmette, La. 70043
Filed June 10, 1976, Ser. No. 694,805
Int. Cl.² B25B *1/20*
U.S. Cl. 269—43 **5 Claims**

1. A conduit stubup jig comprising a channel shaped body, apertures adjacent the ends of said body in the flanges thereof, a plurality of spaced aligned apertures in the flanges of said body intermediate the ends thereof, stakes received in the first named apertures, conduit ends received in the second named apertures, fastening members securing the body of the jig to

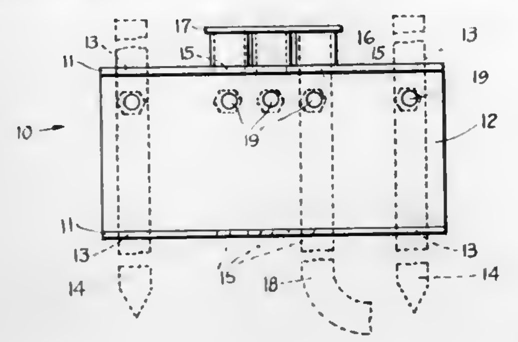

the stakes, and fastening members securing the conduit ends to the jig.

4,061,323
WORKPIECE SUPPORTING AND CLAMPING APPARATUS
Gerald Beekenkamp, Etobicoke, Canada, assignor to The Black and Decker Manufacturing Company, Towson, Md.
Filed Mar. 9, 1976, Ser. No. 665,201
Int. Cl.² B25B *1/22*
U.S. Cl. 269—139 **24 Claims**

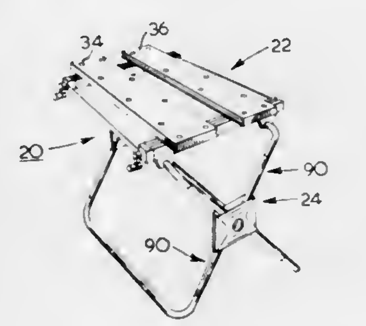

1. A workpiece supporting and clamping assembly comprising:
a generally rigid base frame including a spaced apart pair of elongated frame members;
a pair of elongated mutually adjacent top members mounted on said spaced frame members and disposed generally transversely thereto and each having upper work supporting surfaces lying generally in a common plane and longitudinally extending, opposed side portions defining clamping surfaces;
extensible and retractible clamping means interconnected between said base frame and one of said top members for moving the latter over said pair of frame members in a direction toward the other one of the top members to provide for clamping of a workpiece between said top members or for moving said one of said top members over said pair of frame members in a direction away from said other one of the members to provide for tensioning a workpiece between said top members;
indexing means formed on said frame members for indexing said other top member along said elongated frame members to any one of a plurality of selected positions whereby said top members can accommodate varying sizes of workpieces; and,
positive securing means for positively securing said other top member at any one of said plurality of selected positions irrespective of which of said directions said one top member is moved along said elongated frame members.

4,061,324
PATIENTS SUPPORT TABLE
Sverre Kvaerna, Farsta, and Sigvard Barud, Jarfalla, both of Sweden, assignors to Siemens Aktiengesellschaft, Berlin & Munich, Germany
Filed Feb. 26, 1976, Ser. No. 661,514
Claims priority, application Germany, Mar. 3, 1975, 2509104
Int. Cl.² A61G *13/00*
U.S. Cl. 269—325 **3 Claims**

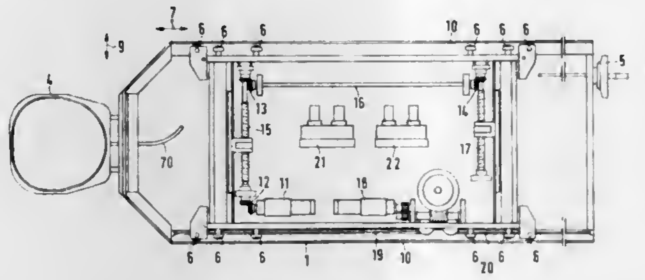

1. In a patients support table including a patients support arrangement; a pedestal supporting said patients support arrangement; at least two pressure medium drive motors for displacing said patients support arrangement relative to said pedestal in at least two directions; a pressure medium conduit for said motors; at least one controllable valve in said pressure medium conduit; and a control device receiving all of the control conduits of all said valves, said control device including manually actuatable control elements for said valves, said motors being compressed air motors, said motors for effecting the movement of said arrangement being located in an upper portion of the table, said upper table portion being removably connected with said pedestal; and coupling means being located between said upper table portion and said pedestal for releasing the compressed air flow between said pedestal and said upper table portion upon mounting of the latter on said pedestal and closing off the compressed air conduits of said pedestal upon removal of said table upper portion.

4,061,325
METHODS AND APPARATUS FOR INTERFOLDING ENDLESS PAPER WEBS
Nicholas Marcalus, and Jesse B. Smaw, both of One Market Street, East Paterson, N.J. 07407
Filed Aug. 19, 1976, Ser. No. 715,879
Int. Cl.² B41L *1/30*
U.S. Cl. 270—40 **4 Claims**

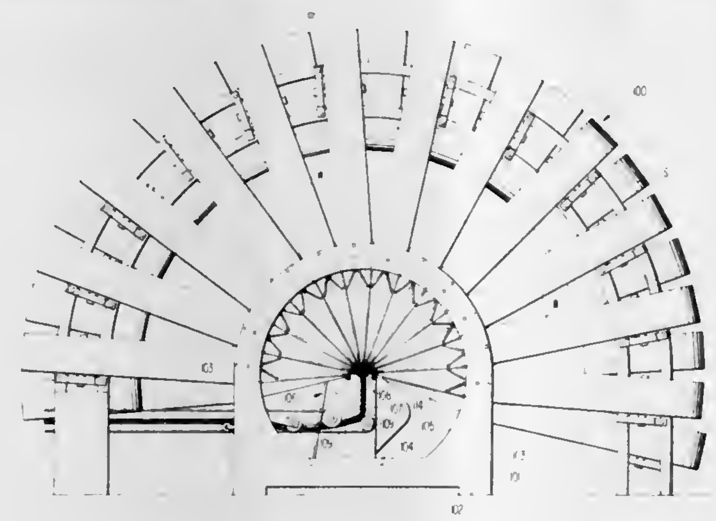

1. A machine for interfolding first and second bundles of interfolded paperous webs comprising:
a conveyor for advancing said first bundle forwardly;
means for advancing said second bundle forwardly in overlying relation relative to said first bundle;
a ramp for supporting said second bundle, said ramp being spaced above and converging forwardly downwardly toward said first bundle in superimposed relation therewith;
a first fold plate inclined upwardly and laterally inwardly relative to web movement from an edge of said first bundle where a fold line of the top web is located;
a second fold plate spaced from said first fold plate and inclined downwardly and laterally inwardly from an edge of said second bundle, diagonally opposite said first-mentioned edge, where a fold line of the bottom web is disposed;
said first and second fold plates arranged to guide the top web portion of said first bundle and the bottom web portion of said second bundle, respectively, in an unfolded condition as said first and second bundles converge vertically toward one another;
a terminal edge of said first fold plate being inclined downwardly in the direction of bundle travel and the terminal edge of said second fold plate being inclined inwardly in the direction of bundle travel;
said first and second fold plates terminating short of the point of final merging of said bundles, allowing said unfolded webs to assume a mutually interfolded posture.
2. In a machine for interfolding webs of paper comprising:
a plurality of generally radially arranged elongated fold plates converging longitudinally from outer ends thereof toward inner ends thereof, each plate including a web folding edge, the folding edge of each plate being situated at a side thereof opposite the folding edge of an adjacent plate,
a snub element spaced from the outer end of each folding edge, said snub element having a curved periphery defining a web discharge edge, said discharge edge being offset from the line of its associated folding edge in a direction toward a side of the plate opposite said folding edge so that an imaginary line between the outer ends of said folding edge and said discharge edge extends at an angle relative to said folding edge;
means for feeding a web of paper across the curved periphery of said snub element and along the folding edge of each plate so that said web is folded longitudinally in half along said folding edge,
means for overlapping one half of one web with one half of an adjacent web so that as said webs gradually converge along said converging plates, said adjacent webs become interfolded, and
a rotatably mounted guide roller spaced from the outer end of each folding edge, said roller being freely rotatable about an axis extending substantially perpendicular to the plane of the associated plate, said roller including a web-contacting periphery which is offset from said imaginary line so that the web is deflected from such imaginary line to a position nontangential relative to the curved periphery of said snub element to increase the tautness of the web.

4,061,326
APPARATUS FOR FOLDING FLATWORK
Donald Lewis Proudman, 215 Lincoln St., North Easton, Mass. 02356
Filed Jan. 26, 1976, Ser. No. 652,395
Int. Cl.² B65H *45/00*
U.S. Cl. 270—69 **7 Claims**

1. In combination with an ironer and a folder, a digital control system for making folds at selected intervals in flatwork moving from said ironer to said folder, said folder including a folding mechanism that is responsive to said digital control system for making said folds, said digital control system comprising:
a. sensor means for detecting said moving flatwork and for generating a first signal indicating such detection, said sensor means located at a single location along the travel path of said web;

b. clock means for generating a first and a second series of clock pulses, said first series of clock pulses occurring at a basic rate, said second series of clock pulses occurring at a rate which is one third said basic rate;

c. controller means connected to said sensor means and said clock means, said controller means including at least first and second digital counter means for counting said clock pulses, said clock pulses occurring at said basic rate and said clock pulses occurring at said one third rate are applied to said second and first digital counter means, respectively; and

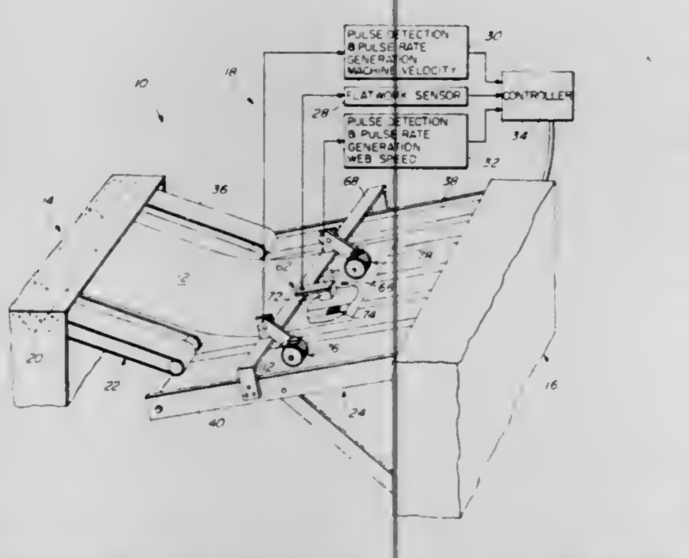

d. digital switch means connected to said first and second digital counter means for establishing a preset count of clock pulses in each said digital counter means, each said preset count representing a specific number of clock pulses, said first digital counter means generating a first fold signal when the number of clock pulses applied thereto is equal to said preset count established therein, said second digital counter means generating a second fold signal when the number of clock pulses applied thereto is equal to said preset count established therein, said first and second fold signals operative to actuate said folding mechanism for folding said flatwork at selected intervals.

4,061,327
FOLDING APPARATUS
Hubert Blessing, 4431 Bobbitt Drive, Dallas, Tex. 75229
Filed Mar. 29, 1976, Ser. No. 671,625
Int. Cl.² B65H *45/00*
U.S. Cl. 270—78 **7 Claims**

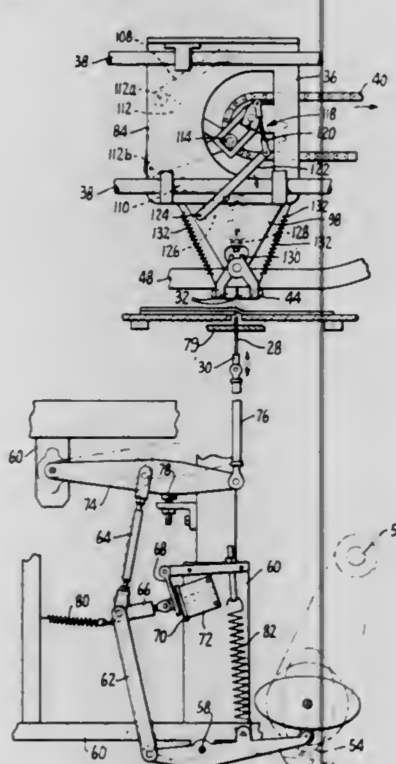

1. Apparatus for folding a web-like work piece comprising a folding blade, means for actuating the folding blade to travel in a predetermined direction, means for positioning the work piece with respect to the blade in a plane non-parallel to the direction of blade travel and means for triggering the blade actuating means to cause the blade to impact with the work piece so as to fold it and then withdraw to its original position, and wherein the folding blade actuating means includes a two ended toggle linkage connected at one end in a driving relationship with the folding blade, the toggle linkage having a normally flexible knee joint between the two ends, means for supplying a constantly reciprocating driving force to the other end of the toggle linkage, and electromechanical means for selectively locking the knee joint whereby the driving force is transmitted to the folding blade when the knee joint is locked and is diverted into flexing the knee joint when the knee joint is unlocked, the electromechanical means including a stationary frame, a selectively energizable coil, an armature, the armature being immovable with respect to the coil when the coil is energized, and means for pivotally connecting the coil and the armature between the stationary frame and the knee joint to constrain the knee joint from flexing after the coil is energized.

4,061,328
PAPER FEEDER
Sakae Fujimoto, Chofu; Takaji Sue, Kawasaki, and Toshihiko Misawa, Tokyo, all of Japan, assignors to Ricoh Co., Ltd., Tokyo, Japan
Filed June 15, 1976, Ser. No. 696,399
Claims priority, application Japan, June 25, 1975, 50-79648; June 25, 1975, 50-79647; June 19, 1975, 50-74773
Int. Cl.² B65H *3/44, 3/46*
U.S. Cl. 271—10 **10 Claims**

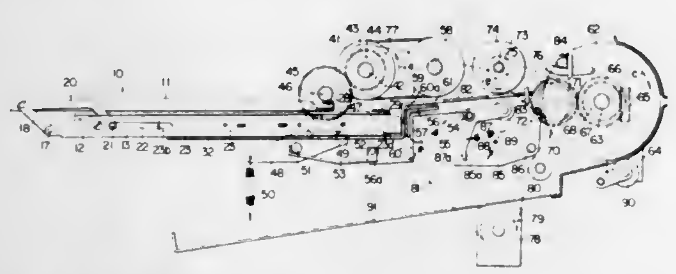

1. A sheet feeder comprising:

a first tray means for receiving a transmit original which is inserted inside a sheet carrier formed by a transparent sheet material;

a second tray means for receiving a plurality of recording sheets in a stack;

means for selectively locating one of the first and second tray means in a paper feeding position;

sheet feed means for feeding sheets including:

a corner separator; and

a feed roller means for respectively feeding a transmit original and recording sheet from the first and second tray means when respectively located in the paper feeding position;

an endless sheet conveying belt disposed above a passageway followed by a transmit original inserted in a sheet carrier and a recording sheet as they are respectively fed by the sheet feed means, the conveying belt being disposed for contact with the upper surface of a respective passing sheet carrier and recording sheet for conveying it to a processing station;

a frictional member disposed below the passageway and having a frictional surface gently pressed against the surface of the sheet conveying belt;

means for supporting the frictional member in a movable manner for movement in a direction normal to the surface of the sheet conveying belt; and

means for maintaining said frictional member and its frictional surface away from the sheet conveying belt when the first tray means is located in the paper feeding position.

4,061,329
OFFSET CARD FEED APPARATUS
Daniel B. Sachuk, Exton, and Robert L. Lane, Broomall, both of Pa., assignors to Computer Peripherals, Inc., Rochester, Mich.
Filed Nov. 26, 1976, Ser. No. 745,338
Int. Cl.² B65H *3/06, 5/06*
U.S. Cl. 271—10 **13 Claims**

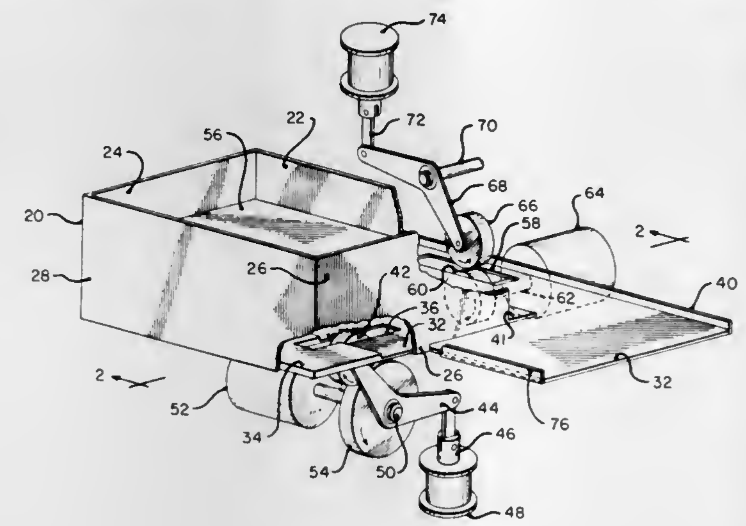

1. An apparatus for feeding record cards from a card supply to a stationary position comprising:

a. drive means operating in a first direction;

b. feed means positioned adjacent a card in said card supply and engaging said drive means for operation in a second direction opposite to said first direction;

c. means supporting said feed means for movement into engagement with the card in the card supply when actuated, said feed means operated by said drive means in said second direction during said engaging movement to feed the enlarged card from the card supply to the stationary position;

d. and actuating means operatively associated with said support means to actuate said support means in said second direction to position the feed means in a card engaged position when enabled, said drive means moving the feed means in said first direction to a card disengaged position upon the disabling of said actuating means wherein said feed means will operate in said second direction while simultaneously being moved in said first direction by said drive means, which movement in said second direction will hold the card in the stationary position during movement of the feed means to the disengaged position.

4,061,330
SHEET SEPARATOR FOR USE IN ELECTROPHOTOGRAPHIC COPYING MACHINES
Nobuyuki Yanagawa, Chigasaki, Japan, assignor to Ricoh Co., Ltd., Tokyo, Japan
Filed Aug. 9, 1976, Ser. No. 712,714
Claims priority, application Japan, Aug. 9, 1975, 50-97025
Int. Cl.² B65H *29/54*
U.S. Cl. 271—174 **6 Claims**

1. A sheet separator for use in electrophotographic copying machines of the type comprising a rotating member for carrying copy sheets on the surface thereof, said separator comprising:

means disposed at a position adjacent the peripheral surface of said rotating member for separating a copy sheet from the surface when it is held attracted thereto, and having an air suction inlet formed in an end face which is located opposite the rotating member;

support shaft means for mounting said separating means for rotation between a first position in which the air suction inlet is located rearwardly, as viewed in the direction of rotation of the rotating member, of a line joining the axes of rotation of the rotating member, and the support shaft means, and a second position in which it is located forwardly of the line, said end face being located closest to the surface of the rotating member when aligned with the line;

air suction means communicating with the suction inlet for

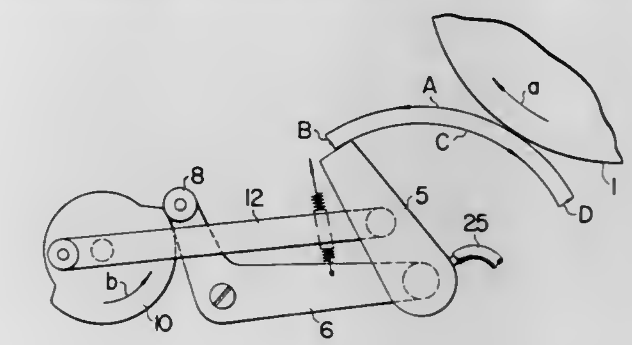

drawing air therethrough at least during a movement thereof from the position aligned with said line to the second position;

drive means for moving the separating means from the first to the second position as the leading end of the copy sheet which is held attracted to the surface of the rotating member approaches said line; and

means for causing the velocity of movement of the end face of the separating means to exceed the peripheral speed of the rotating member.

4,061,331
DOCUMENT RECEIVING APPARATUS
Adolph Broadus Habich, Austin, Tex., assignor to International Business Machines Corporation, Armonk, N.Y.
Filed June 7, 1976, Ser. No. 693,817
Int. Cl.² B65H *31/00, 31/20*
U.S. Cl. 271—223 **4 Claims**

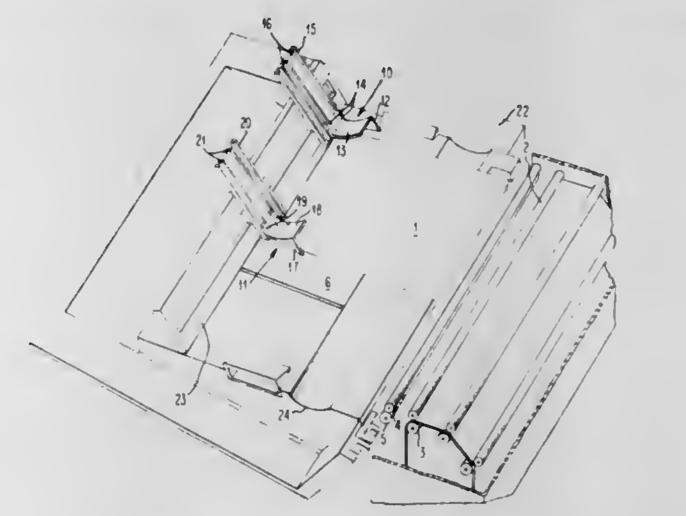

1. An apparatus for receiving documents fed thereinto at a low velocity during an initial stage of a feeding cycle and at a high velocity during a final stage of said feeding cycle by spaced low and high velocity feeding means located adjacent said apparatus, said apparatus comprising:

a. platform means having a positionable receiving end for providing a base for receiving the leading edge of a document when fed thereonto at a low velocity during said initial stage; and

b. throat means for trapping said leading edge, and being located adjacent an end opposite said receiving end, and extending toward said receiving end a sufficient extent to

1. trap said leading edge prior to said document being fed at said high velocity, and

2. not restrict access for removal of documents from said

apparatus, said throat means including a number of wings, each comprising a side plate and an upswept top, and means supporting said wings for movement toward and away from said platform such that said wings are elevatable under the influence of said document when fed under said unswept top of said wings at said high velocity.

4,061,332
ROLLER CONVEYOR
Karl Heinz Baumgärtel, Constance; Dieter Altenburg, Allensbach, and Siegfried Häse, Constance, all of Germany, assignors to Licentia Patent-Verwaltungs-G.m.b.H., Frankfurt am Main, Germany
Filed June 23, 1976, Ser. No. 698,817
Claims priority, application Germany, July 1, 1975, 2529223
Int. Cl.² B65H *5/34*
U.S. Cl. 271—270 **5 Claims**

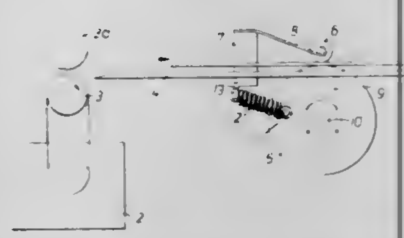

1. In a conveyor apparatus having at least one power-driven roller arrangement for a positive engagement and feed of an item in the conveying direction, the improvement comprising an incremental feed device situated downstream of said roller arrangement as viewed in the conveying direction, said incremental feed device including
a. an incremental feed roller spaced from said roller arrangement, each item being advanced into the zone of said incremental feed roller by said roller arrangement;
b. means for urging the item into frictional contact with the periphery of said incremental feed roller for rotating said incremental feed roller from a first position to a second position by said roller arrangement with the intermediary of the item being advanced; and
c. an energy storing means connected to said incremental feed roller for being armed by said incremental feed roller during its rotation from said first position to said second position and for rotating said incremental feed roller from said second position towards said first position codirectionally with the rotation from the first position to the second position to further advance the item in said conveying direction.

4,061,333
ADJUSTABLE TENNIS RACQUET
Spencer N. Shaps, 42 Winding Way, Parsippany NJ 07054
Filed July 15, 1976, Ser. No. 705,667
Int. Cl.² A63B *51/12*
U.S. Cl. 273—73 E **1 Claim**
1. A tennis racket with means for adjusting string tension comprising: a racket frame having a head portion carrying longitudinal and horizontal strings, a throat portion and a handle portion, a pair of spaced apart horizontal frame members located at the throat portion and fixedly attached to opposed sides of the frame, the frame sides and the pair of frame members forming an enclosed space, the tension adjusting means including a longitudinally moveable, horizontally extending tension bar located between the pair of frame members and within the enclosed space so that its horizontal movement in a plane perpendicular to the racket plane is restricted, the racket being strung so that the longitudinal strings extend freely through the upper frame member and then attached to the tension bar, a pair of screws threadedly engaging and extending through the tension bar and held in position by the pair of frame members, the screws having their manipulable ends extending outwardly from the lower frame member so

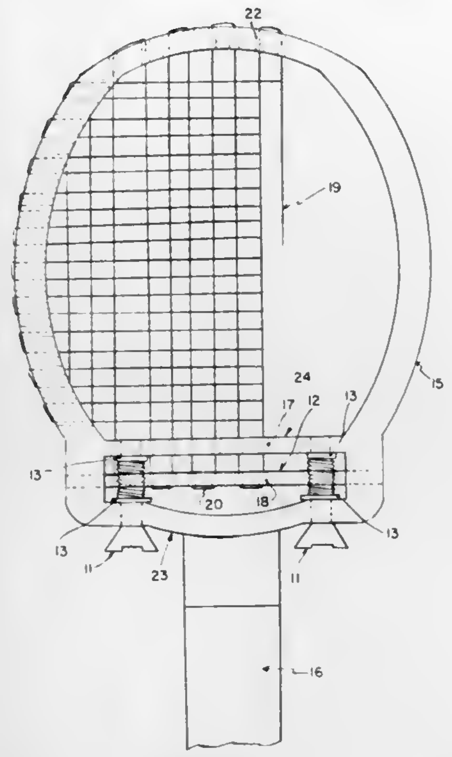

that upon turning of the screws the tension bar is longitudinally displaced thereby adjusting the tension of the strings.

4,061,334
DISC BOWLING GAME
Hideyuki Kanno, Tokyo, Japan, assignor to Tomy Kogyo Co., Inc., Tokyo, Japan
Filed Mar. 12, 1976, Ser. No. 666,307
Claims priority, application Japan, Mar. 26, 1975, 50-10338[U]
Int. Cl.² A63B *65/12*
U.S. Cl. 273—126 A **8 Claims**

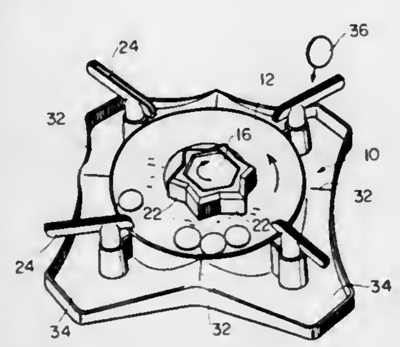

5. A game, comprising a base, a turntable, means mounting said turntable on said base for rotation in a substantially horizontal plane, a deflecting member, means mounting said deflecting member for rotation with respect to said turntable, at least one game piece, at least one chute mounted to said base extending downwardly to said turntable and adapted to permit said game piece to roll downwardly onto said turntable to be deflected by said deflecting member, and at least one compartment formed within said base outside and below said turntable for receiving said game piece after deflection by said deflection member.

4,061,335
BOARD GAME APPARATUS
Jeffrey D. Breslow, Highland Park, Ill., assignor to Marvin Glass & Associates, Chicago, Ill.
Filed Jan. 30, 1976, Ser. No. 653,934
Int. Cl.² A63F *3/00*
U.S. Cl. 273—134 AT **6 Claims**
1. A board game apparatus for a plurality of players, comprising, in combination:
a playing board, a relatively large playing area about the

periphery of the board, a course positioned interiorly of said large area defining a path of travel, said path of travel being divided into a plurality of stations, and including instruction stations having indicia thereon with reference to the playing rules which indicate a particular function to be performed by a player;
a plurality of sets of distinctive small playing areas within said relatively large playing area including means for distinguishing each said set of small playing areas from the remaining sets of small playing areas on the playing board, said distinguishing means comprising identifying stations on said path of travel, each of said identifying stations being associated with and adjacent one of said sets of small playing areas;

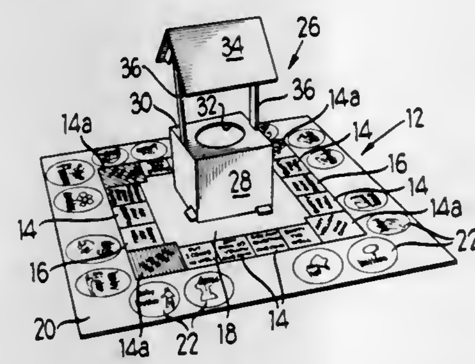

a first set of movable playing pieces for movement over said playing piece path of travel;
a second set of playing pieces having identical distinguishing means for defining a relationship to one set of small playing areas within a portion of said relatively large playing area, second identical means for indicating a relationship to one of the distinctive small playing areas within said related portion of said identified large playing area and means for concealing the same from the other players of the game;
a group of monetary tokens for payment of rewards to and penalties by players of the game; and
means for determining how many stations a particular movable playing piece is to be moved by a player along said path of travel defined by said stations.

4,061,336
GEOGRAPHIC BOARD GAME
Launa J. Lincoln, 10227 Meadowood, St. Louis, Mo. 63114
Filed May 14, 1976, Ser. No. 686,471
Int. Cl.² A63F *3/04*
U.S. Cl. 273—134 AC **8 Claims**

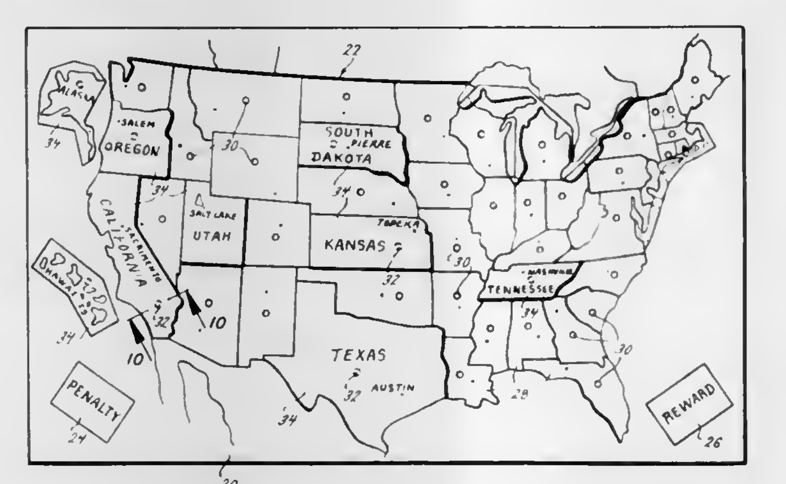

1. In a game, a playing surface having divisions thereon forming distinct geographical areas, cooperating pieces to be received on some of the areas of the playing surface, means for the playing surface to retain the cooperating pieces, means to select designated areas of the playing surface as beginning and goal locations, player travel mode tokens having different move characteristics represented by the appearance of the token, means for governing the conduct of the game between the beginning location and goal including means for selecting movement of the tokens on the playing surface between the beginning and goal locations.

4,061,337
BOARD GAME APPARATUS
William Boyd Callender, 723 Marks Road, Valley City, Ohio 44280
Filed June 25, 1976, Ser. No. 699,662
Int. Cl.² A63F *3/00*
U.S. Cl. 273—134 AT **15 Claims**

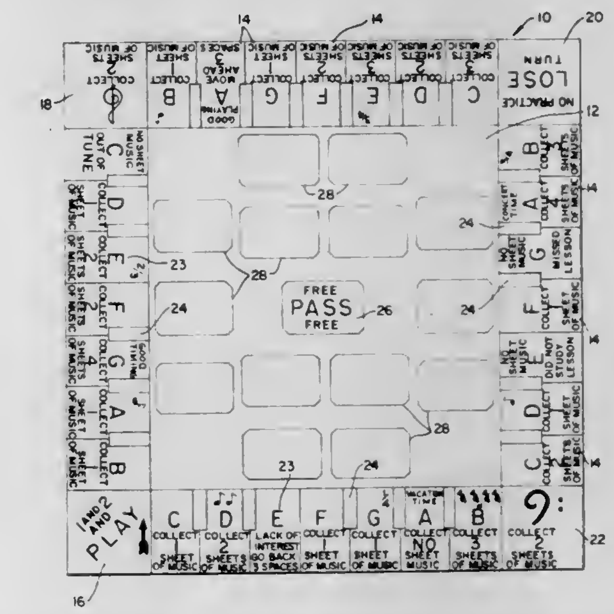

1. A game including a game board having spaces providing a path of movement for a game piece, instruction means for determining the extent of a player's movement of a game piece along said path, and first and second means associable by comparison by a player to determine whether the player gains access to said instruction means.

4,061,338
NOVELTY COIN FLIPPING DEVICE
Burton D. Goldberg, 15109 Watergate Road, Silver Spring, Md. 20904
Filed May 7, 1976, Ser. No. 684,259
Int. Cl.² A63B *67/12*
U.S. Cl. 273—138 R **6 Claims**

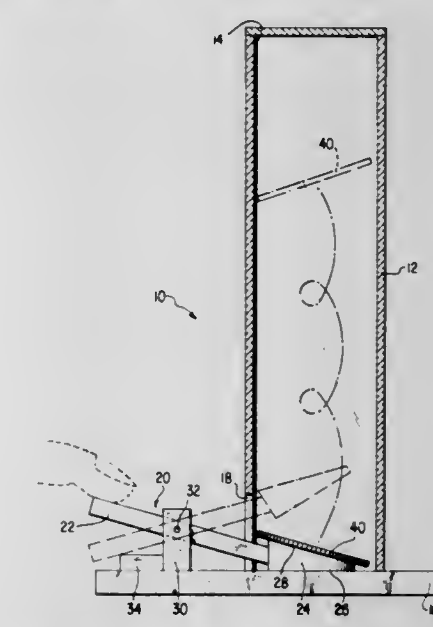

1. A novelty coin flipping device comprising:
an upstanding transparent tubular member having a substantially circular cross-section;
said tubular member having a cover member closing the upper end thereof;
a pivotal operating lever having a coin support pad thereon,

said coin support pad being disposed adjacent the bottom of said tubular member; and
a circular coin disposed in said tubular member, said coin normally resting upon said support pad;
said operating lever being digitally operable to flip said coin upward within said tubular member;
said coin, when flipped upward, rising within said tubular member and then gravitationally dropping therein to come to rest in either a "heads" or a "tails" position upon said support pad.

4,061,339
MOVABLE PUZZLE
Theo Maurice Simon Coster, Tel Baruch, Israel, assignor to Or Da Industries Ltd., Israel
Filed June 11, 1976, Ser. No. 694,958
Claims priority, application Israel, Sept. 25, 1975, 48178
Int. Cl.² A63F *9/12*
U.S. Cl. 273—157 R **7 Claims**

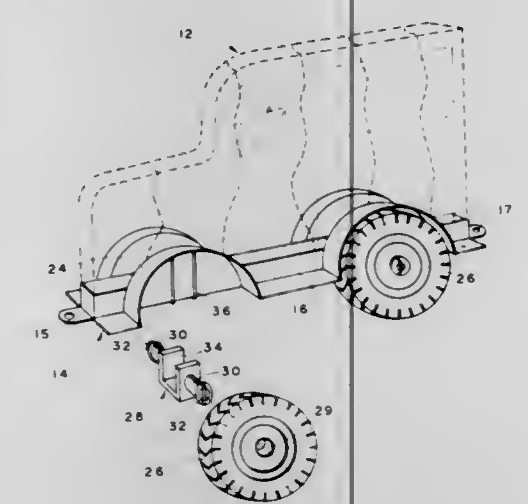

1. A movable puzzle comprising:
a plurality of puzzle elements each having a top and a bottom portion and having a substantially planar configuration and length and height dimensions substantially greater than its thickness and together forming an image on at least one planar face of the top portion thereof when juxtaposed in a desired relative generally planar orientation;
means for mounting said puzzle pieces in upstanding orientation and in desired juxtaposition and spatial relationship so as to permit movement of the puzzle pieces as a whole, said means including:
an elongate trough formed of:
generally parallel disposed first and second side members spaced apart separated by a distance approximately equal to the thickness of the planar puzzle pieces; and
end pieces joining said side members to define a trough length approximately equal to the overall length of the bottom portions of the juxtaposed puzzle pieces, said trough being operative to provide upright support and maintenance in juxtaposition of said puzzle pieces inserted therein; and
translation means permitting relative movement of said support means with respect to a surface;
said mounting means being configured in a design which together with said image forms a composite representation.

4,061,340
GOLF SWING AID
Allen Husted, 12865 Main St., Garden Grove, Calif. 92640
Filed July 13, 1976, Ser. No. 704,763
Int. Cl.² A63B *69/36*
U.S. Cl. 273—189 R **4 Claims**

1. A golf aid device for controlling the position of the upper portion of the swing arm during a golf swing comprising:
a. A removable belt suited to surround the body of the golfer and which defines a generally horizontal plane about such body;
b. A generally rigid and horseshoe-type member which is adapted to fit about the portion of the golf swing arm above the elbow; and

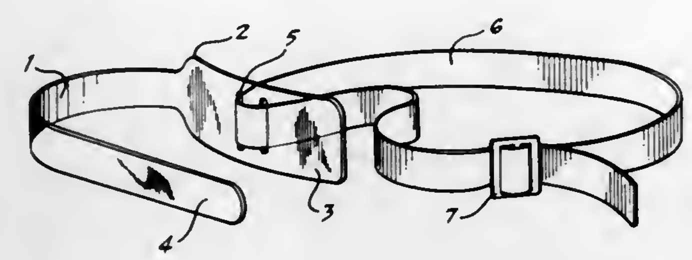

c. Means for attaching said member to said belt so that said member surrounds the swing arm and prevents such arm from extending backwardly or laterally from the body during the backward swing stroke; and so that such member is maintained in such horizontal plane.

4,061,341
SEPARATORS FOR SPACING RECORDS
Ricardo Gabriel Kaplan, Miranda 5237, 1407 Buenos Aires, Argentina
Filed Aug. 20, 1976, Ser. No. 716,328
Claims priority, application Argentina, Aug. 29, 1975, 260194
Int. Cl.² G11B *3/00*
U.S. Cl. 274—1 R **7 Claims**

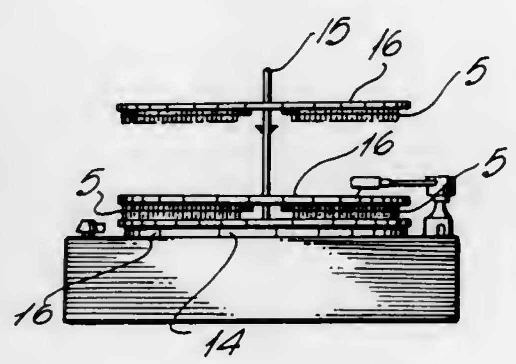

1. Separators for spacing records making up a stack of records, comprising a plurality of thin metal plates each provided with a central hole whose diameter is larger than the diameter of the central hole of the records and having a self-acting adhesive on one of its faces, said plates being adhesively attachable to at least one of the faces of each record in the central zone of the latter; and a plurality of parts constituted by a central portion having a hole whose diameter is at least as great as the diameter of the central hole of the plate, a magnetic zone surrounding said hole, and peripheral portions defining elastic zones that extend over the surface of said parts.

4,061,342
TONE ARMS
Steven H. Young, 23635 Tiara St., Woodland Hills, Calif. 91367
Filed June 7, 1976, Ser. No. 693,718
Int. Cl.² G11B *3/10*
U.S. Cl. 274—23 A **8 Claims**

1. A tone arm assembly adapted for mounting a phonograph cartridge comprising:
a vertical base member;
an elongated horizontal support member rotatably mounted on said base and having an elongated opening formed therein and side tracks disposed on opposite sides of said opening; and
a carriage comprising a suspension support member mounted so as to move freely along said side tracks, a cartridge mount assembly adapted for mounting a phonograph cartridge, a first balance arm pivotably mounted on one side of said suspension support member and coupled to one side of said cartridge mount assembly, a second balance arm pivotably mounted to the other side of said suspension support member and coupled to the other side of said cartridge mount assembly, whereby the cartridge

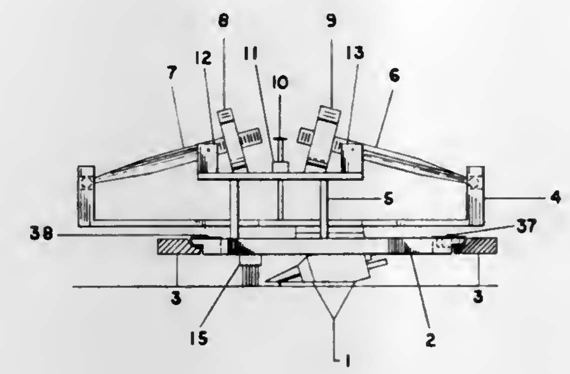

may be balanced by adjustment of said balance arms, and first and second counter balance weights slideably mounted on said first and second arms, respectively, whereby the tracking force applied to said cartridge is selectable by means of said counter balance weights.

4,061,343
VIBRATION TRANSMISSION MECHANISM FOR A PHONOGRAPH
Katsumi Watanabe, Kawasaki, Japan, assignor to Yugen Kaisha Watanabe Kenkyusho, Japan
Filed June 15, 1976, Ser. No. 696,113
Claims priority, application Japan, Mar. 11, 1975, 50-26566
Int. Cl.² G11B *3/00*
U.S. Cl. 274—24 R **4 Claims**

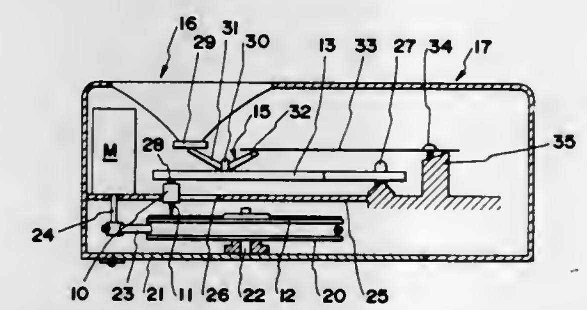

1. In a phonograph of the type comprising:
a casing;
a turntable rotatable with a record mounted thereon;
a pivotally mounted pickup arm carrying a reproducing stylus adapted to follow a groove in said record during rotation of said turntable for receiving mechanical vibrations therefrom;
a diaphragm rigidly supported by a portion of said casing;
an intermediate vibrator provided with means for mounting same to said casing in a cantilever fashion between said pickup arm and said diaphragm, said intermediate vibrator being adapted to remain in sliding contact with said pickup arm throughout the course of its travel from a predetermined starting to a terminal position on said record for receiving therethrough the mechanical vibrations set up in said reproducing stylus;
the improvement comprising:
a lever pivotally supported at a point intermediate both ends of said lever by mounting means provided on said intermediate vibrator, said lever having one end thereof disposed opposite to said diaphragm; and
means for applying a constant force to the other end of said lever for urging said one end thereof against said diaphragm, whereby the mechanical vibrations received by said intermediate vibrator are transmitted through said lever to said diaphragm to cause said diaphragm to produce corresponding sound waves.

4,061,344
FITTING FOR PENETRATION THROUGH FIRE RATED BARRIERS
Robert L. Bradley, Burlington, and Daniel J. Sullivan, New Britain, both of Conn., assignors to General Signal Corporation, Rochester, N.Y.
Filed June 23, 1976, Ser. No. 699,029
Int. Cl.² H02G *3/22*
U.S. Cl. 277—26 **14 Claims**

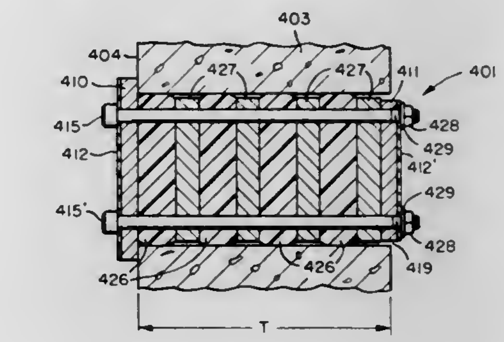

1. A fitting for placement in a penetration in a fire rated barrier to maintain the integrity of the barrier before, during and subsequent to a fire and comprising in combination:
a. first and second sealing materials disposed in said penetration which are compressible and intumescent, respectively, and which are in contiguous relationship; and with said first sealing material subject to dehydration, deterioration and volume reduction in response to a temperature above a threshold temperature and said second sealing material subject to the start of intumescence at, or below, said threshold temperature; and
b. pressure control means applying pressure to said first and second sealing materials for causing said first sealing material to seal said penetration against the passage of gases through said penetration from one side of said barrier to the other and for confining the initial volume into which said second sealing material expands when it intumesces; whereby any reduced volume of said first sealing material resulting from deterioration thereof in response to reaching said threshold temperature is filled by the intumescence of said second sealing material for maintaining the seal of said penetration against the passage of gases through said penetration from one side of said barrier to the other.

4,061,345
SEAL FOR A ROTATING SHAFT
Rolf Lund, Kauniainen, Finland, assignor to Oy E. Sarlin AB, Vantaa, Finland
Filed Apr. 29, 1977, Ser. No. 792,304
Claims priority, application Finland, May 3, 1976, 761235
Int. Cl.² F16J *15/34*
U.S. Cl. 277—88 **9 Claims**

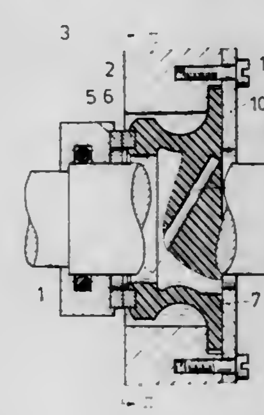

1. Improvement in a seal for carrying a rotating shaft through a wall, comprising a rotating sealing ring and a stationary sealing ring abutting thereagainst, one of these two being connected with the shaft and the other with the wall and one of the two being located at the end of a rubber bellows produc-

ing an axial sealing pressure, wherein the improvement comprises that within the wall of the rubber bellows there is at least one metal pin, which is positioned obliquely with reference to the shaft.

4,061,346
CUP SEAL FOR USE IN A MASTER CYLINDER
John R. Coleman, Dayton, and Dwight W. McDaniel, Trotwood, both of Ohio, assignors to General Motors Corporation, Detroit, Mich.
Filed Jan. 24, 1977, Ser. No. 761,884
Int. Cl.² F16J *15/32*
U.S. Cl. 277—205 **3 Claims**

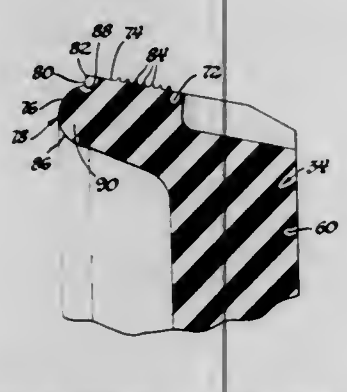

1. A cup seal for use on master cylinder pistons and the like, said seal comprising:
an annular body having an inner peripheral first seal lip in the free position extending axially and radially inwardly, a radially extending center portion from which said inner peripheral seal lip extends, and an outer peripheral seal second seal lip in the free position extending axially and radially outwardly from said center portion in the same axial direction as said first seal lip;
said second seal lip having an axial end defined by a surface, and an outer peripheral surface joined to said axial end surface at adjacent sides by a sharp lip edge, said lip being supported to extend axially by the lip material with said axial end of said lip extending axially away from said seal center portion, said axial end surface including a radially outer annular flat surface defined at its outer peripheral edge by said sharp lip edge and a substantially semi-circular cross section convex surface joining the inner peripheral edge of said annular flat surface and extending axially away from said seal center portion.

4,061,347
SHOCK-ABSORBING SKI POLE GRIP
Donald J. Stern, and Jon I. Allsop, both of Bellingham, Wash., assignors to Allsop Automatic Inc., Bellingham, Wash.
Filed June 1, 1976, Ser. No. 691,718
Int. Cl.² A63C *11/22*
U.S. Cl. 280—11.37 H **3 Claims**

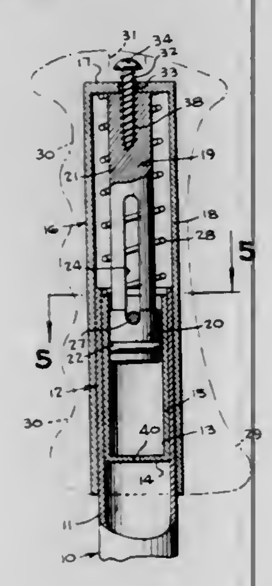

1. In a shock absorbing ski pole, a shaft, a cylinder mounted within the upper end of said shaft and said cylinder including a bottom portion and a cylindrical side portion, a sleeve movably mounted on said shaft, said sleeve including a top section and a cylindrical side section, a piston having a portion movably mounted in said cylinder, and said piston including a lower end of increased diameter and the remaining portion of said piston being of reduced diameter, there being an annular groove in the lower enlarged end of said piston, an "O" ring mounted in said groove and said "O" ring frictionally engaging the inner surface of the side section of said cylinder, said piston having an elongated slot therein, the upper end of said cylinder and shaft having diametrically opposed registering apertures therein, a pin extending through said apertures and though said slot, a return spring circumposed on said piston and said spring having its lower end abutting the upper edge of said cylinder, and the upper end of said return spring abutting the top portion of said sleeve, a hand grip mounted on said sleeve, a holding screw extending through the top portion of said hand grip and through the top portion of said sleeve and into engagement with the upper end of said piston, and a strap connected to said hand grip.

4,061,348
ROLLER SKATES
Lewis H. Carter, 969 Menlo Ave., Menlo Park, Calif. 94025
Filed Dec. 20, 1976, Ser. No. 752,412
Int. Cl.² A63C *17/14*
U.S. Cl. 280—11.21 **9 Claims**

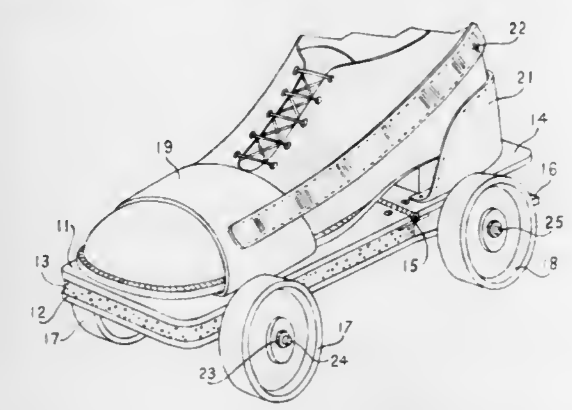

1. A roller skate comprising an upper foot-size plate having a front portion and a heel portion, a hinge pivotally interconnecting said front and heel portions, and further having means for strapping a foot onto the upper plate, a lower plate continuous with the upper plate, a compressible material disposed between the front portion of the upper plate and the corresponding portion of the lower plate and bonded to the upper and lower plates to hold the plates secure one atop the other, a pair of front wheels disposed on an axle secured to the undersurface of the lower plate, a pair of rear wheels disposed on an axle secured to the undersurface of the lower plate, a first braking disc secured to the wheel hub of each front wheel, a second braking disc slidably mounted on the front axle adjacent to the first braking disc, means for urging the first and second braking discs into braking relationship when the wheel goes in a backward direction but allowing forward motion of the wheels, a first rear braking disc secured to the hub of each rear wheel, a second rear braking disc slidably mounted on the axle adjacent the first disc, and lever actuated by downward heel pressure on the heel portion of the upper plate for moving the rear braking discs together, and spring means for disengaging the rear braking discs to allow forward motion of the skate.

4,061,349
AUXILIARY WHEEL ASSEMBLY
Roy Layton Stahl, 6838 Forest Crest North, San Antonio, Tex. 78240
Filed Dec. 13, 1976, Ser. No. 750,012
Int. Cl.² B62B *1/20*
U.S. Cl. 280—47.2 **11 Claims**

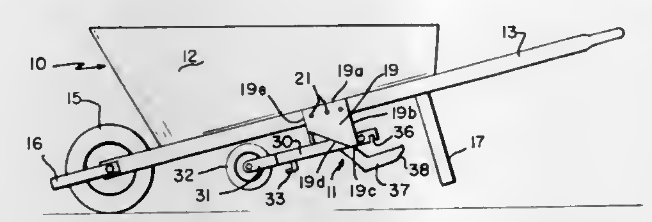

1. An auxiliary wheel assembly adapted to be mounted on a wheelbarrow including a pan, forwardly converging handles secured to said pan, a forward wheel rotatably mounted intermediate said handles, and legs supporting said pan, said assembly comprising
first and second outer plates adapted to be secured to selected portions of said handles,
first and second transversely extending and longitudinally spaced bars secured to selected portions of said handles,
first and second inner plates equidistantly spaced laterally of the longitudinal axis of said wheelbarrow and intermediate said first and second outer plates,
said inner plates secured to selected portions of said second bar,
at least first, second and third transversely extending rods passing through selected portions of said inner plates and secured laterally to said outer plates,
an elongated, longitudinally extending arm pivotally mounted intermediate said inner plates on said second rod,
an auxiliary wheel rotatably mounted on said arm,
a shaped member secured in proximity to the rearmost end of said arm,
said arm adapted to pivot rearwardly until stopped by bearing against said first rod whereby said arm extends angularly upwardly between said first and third rods and said auxiliary wheel additionally supports said wheelbarrow.

4,061,350
SKATEBOARD
Ernest J. Schmidt, Jr.; Michael G. Rinehart, both of Kalamazoo, and Bascom D. Blevins, Portage, all of Mich., assignors to Dayco Corporation, Dayton, Ohio
Filed Sept. 1, 1976, Ser. No. 719,872
Int. Cl.² A63C *17/00*
U.S. Cl. 280—87.04 A **12 Claims**

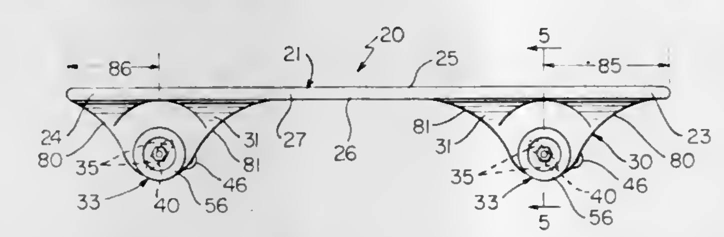

1. A skateboard having a longitudinal axis and comprising, a support member having a top support surface and a bottom surface, a pair of projections fixed to and extending from said member beneath said bottom surface, a pair of wheel assemblies each fastened to an associated projection, and fastening means for fastening each of said wheel assemblies to an associated projection with each fastening means being disposed entirely beneath said bottom surface and comprising means allowing resilient pivoting movements of its wheel assembly in a controlled manner for improved turning of said skateboard, each of said fastening means in each projection comprising an elongate slot extending transversely through its associated projection, said elongate slots being inclined in opposed directions, each of said slots being defined by a pair of spaced planar surfaces adjoined at opposite ends thereof by interconnecting surfaces, each of said wheel assemblies comprising an axle having a central portion provided with a cooperating surface which engages an associated planar surface of its projection, said associated planar surface engaging said cooperating surface holding the axle against rotation relative to its projection, said fastening means further comprising a pair of resilient elastomeric strips disposed on opposite sides of its axle confining its axle within its elongate slot, each strip having portions thereof compressed during turning of the skateboard with the compressed portions serving to restore the associated axle to its original position after turning.

4,061,351
REMOVABLE SKATEBOARD HANDLE POST
Roger L. Bangle, 26264 Orchid Drive, Highland, Calif. 92346
Filed Oct. 26, 1976, Ser. No. 735,390
Int. Cl.² B62M *1/00*
U.S. Cl. 280—87.04 A **7 Claims**

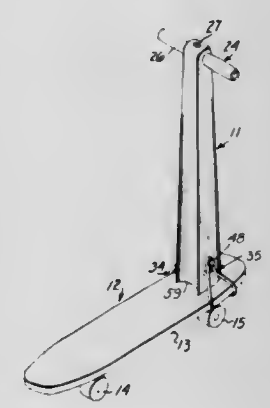

1. A handle post for attachment to a skateboard or the like comprising
a post having a base portion,
said post having a socket in said base portion,
an anchor piece in said socket, and
a tension bar extending through said post,
said bar being tensioned between said anchor piece and the top of said post, and
means for removably attaching said anchor piece to said skateboard,
said post having an opening therein adjacent the top, and a handle extending in said opening, and
said tension bar extending through said handle whereby to lock said handle in said opening.

4,061,352
MUD GUARD
Gordon Bagne, Santa Ana, Calif., assignor to Plasticolor Molded Products, Inc., Placentia, Calif.
Filed Aug. 16, 1976, Ser. No. 714,612
Int. Cl.² B62D *25/16*
U.S. Cl. 280—154.5 R **7 Claims**

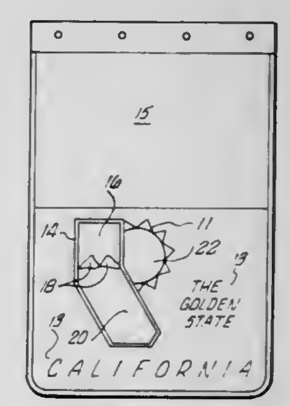

1. A mud guard comprising:
a body of first plastic material;

a reinforcing material embedded in said body such that said first plastic material forms a thin skin coat providing a smooth face to said body; and

a raised design of a second plastic material molded with the body of said mud guard.

4,061,353
TRANSPORT LOCK FOR LIFT BED TRAILER
Stephen A. Kingman, Rensselaer, and Leslie A. Weaver, Monon, both of Ind., assignors to Eugene A. LeBoeuf, Gary, Ind.
Filed Jan. 20, 1976, Ser. No. 650,669
Int. Cl.² B62D *21/02*
U.S. Cl. 280—106 T **15 Claims**

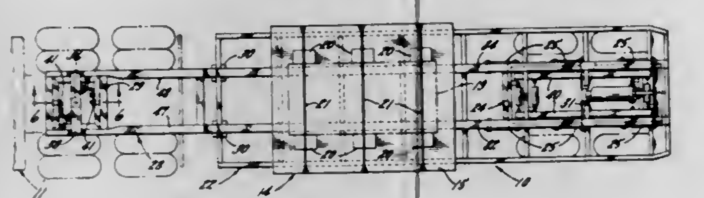

3. In a lift bed highway trailer adapted for coupling to a tractor by means of a fifth wheel connection; the combination comprising:

a. a liftable main frame having a lowered loading and unloading position and a raised transport position;
b. a wheeled subframe underlying said main frame and pivotally connected to the same;
c. a gooseneck fixed to the forward end of said main frame;
d. a jackbox mounted within said gooseneck for vertical sliding movement relative thereto, said jackbox being adapted for attachment to the tractor fifth wheel;
e. power lift means for moving said main frame and gooseneck between the lowered loading and unloading position and the raised transport position; and
f. a pair of power actuated shot pins disposed in the longitudinal center plane of the trailer, said shot pins being mounted in said jackbox in axially spaced relation with each other adapted respectively to engage said gooseneck and lock same in the raised transport position.

4,061,354
STRUCTURAL UNIT FOR SWINGARMS
John Tudor Blum, Gardena, Calif., assignor to Cross Up, Inc., Wilmington, Calif.
Filed Oct. 15, 1976, Ser. No. 732,669
Int. Cl.² B62K *19/04*
U.S. Cl. 280—288 **3 Claims**

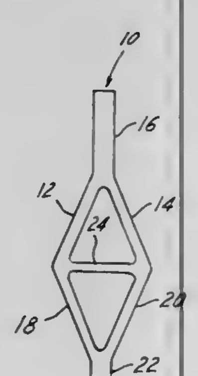

1. A motorcycle swingarm structural member comprising:
an extruded member of predetermined length,
said member throughout its length having a central body portion which in cross-section is a diamond with a crossweb connecting the obtuse angles thereof,
and respective fins integral with and extending the lengths of the acute angles of said member.

4,061,355
SKI BRAKE
Heinz Korger, Munich, Germany, assignor to Hannes Marker, Garmisch-Partenkirchen, Germany
Filed June 16, 1976, Ser. No. 696,716
Claims priority, application Germany, June 16, 1975, 2526909
Int. Cl.² A63C *7/10*
U.S. Cl. 280—605 **7 Claims**

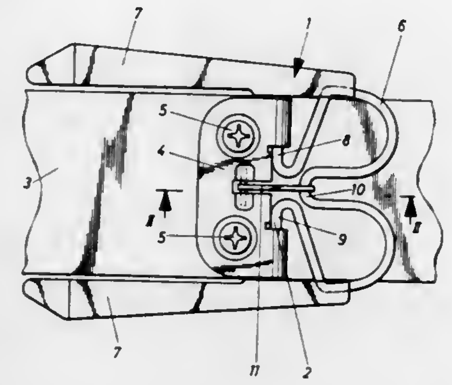

1. In a ski brake adapted to be attached to a ski surface and having the form of a two-armed lever having a pivot which is adapted to extend along the ski surface transversely to the length of the ski and one arm of which serves as a pedal for actuation by a ski boot, whilst the other arm is bifurcated and forms two brake prongs on the outside of the ski, the pedal arm being so spring-loaded that, when the boot is removed, the brake automatically assumes its braking position in which the prongs project downwardly beneath the ski, the improvement comprising the pedal being formed in a substantially M-shape out of a spring wire frame and a coupling member hinged at one end to the central portion of the spring wire frame which lies spaced from the pivot on one side thereof, the other end of said coupling member adapted to be pivotally mounted to the ski on the side of the pivot remote from said central portion of the spring wire frame.

4,061,356
SAFETY ARRANGEMENT FOR A SKI
Georges Pierre Joseph Salomon, Chemin de la Prairie prolonge, 74003 Annecy, France
Filed Apr. 2, 1976, Ser. No. 673,103
Claims priority, application France, Apr. 8, 1975, 75.10921
Int. Cl.² A63C *7/10*
U.S. Cl. 280—605 **11 Claims**

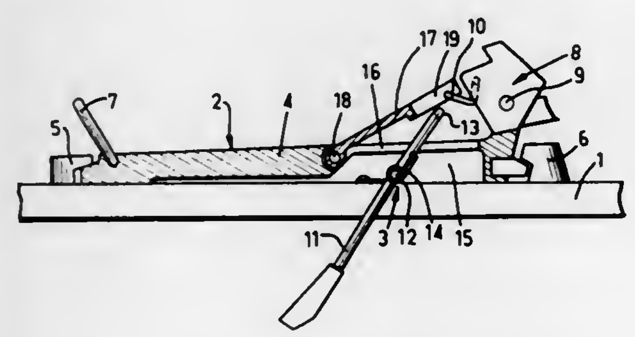

1. A safety arrangement for a ski comprising a binding having a plate, a brake in the form of a spade pivoted on the ski and normally biased by a resilient member into an active position in which said spade projects below the sole of said ski, said spade being retractable into an inactive position against the action of said resilient member, retainer means on said plate for retaining a skier's boot on said plate, and means on said plate for cooperating with said boot to enable said boot to move said spade into said inactive position when said plate is fitted on said ski and the skier's boot is positioned on said plate to be retained by said retainer means.

4,061,357
SKI BINDING HAVING A RELEASABLE BOOT PLATE PROVIDED WITH A SKI BRAKE
Georges Pierre Joseph Salomon, Chemin de la Prairie prolonge, 74003 Annecy, France
Filed Mar. 31, 1976, Ser. No. 672,445
Claims priority, application France, Apr. 3, 1975, 75.10434
Int. Cl.² A63C *7/10*
U.S. Cl. 280—605 **10 Claims**

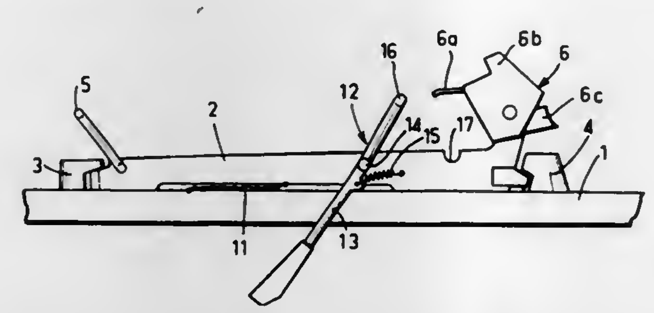

1. A ski binding comprising a plate engageable by a skier's boot, releasable means for securing said plate on a ski and enabling said plate to separate from said ski if the skier should fall, a ski brake supported by said plate and comprising at least one spade pivoted on said plate, and a member movable by engagement with said boot to control said spade so that said spade is retracted into an inactive position above the ski sole when said boot is placed on the plate and projects downwardly into an active position below said ski sole when said boot is separated from said plate.

4,061,358
SKI BOOT TOE BINDING
Masahiro Murata, Matsudo, Japan, assignor to Hope Co. Ltd., Tokyo, Japan
Filed Aug. 13, 1976, Ser. No. 714,016
Claims priority, application Japan, Oct. 31, 1975, 50-132017
Int. Cl.² A63C *9/08*
U.S. Cl. 280—629 **7 Claims**

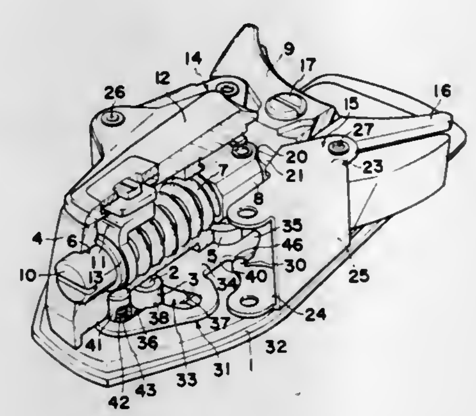

1. A ski boot toe binding comprising a base plate adapted to be attached on a ski, a pivot body, a pin extending upwardly from said base plate and through said pivot body thereby pivotably mounting said pivot body on said base plate, a toe holding member swingably mounted on said pivot body for receiving a boot toe, a pair of arms, one at each side of said plate, each pivotably connected at one end thereof to said pivot body and at the other end thereof to said toe holding member, an opening in said pivot body, yieldable means provided in said opening and acting upon said toe holding member to urge the latter to a toe holding center position, a cam plate provided between said base plate and said pivot body and movable from a locking position to an unlocking position, means mounting said cam plate for sliding movement with respect to said base plate and pivot body and for rotating movement about said pin, cooperating interengageable means on said cam plate and said arms normally disengaged with respect to both arms while said toe holding member is in the boot toe holding central position, said toe holding member and one of said arms being adapted to be swung upon the application of a first predetermined force, from the central position thereof through a predetermined stroke to a locking position of the toe holding member where said interengageable means is engaged with respect to one of said arms, and said pivot body is immovably engaged with said base plate, and said cam plate being slidably moved in the lengthwise direction of said base plate by said one arm after said toe holding member is swung beyond said predetermined stroke by the application of a force greater than said first force and assuming a rotated unlocking position where the engagement between said pivot body and said base plate is released, thereby allowing said pivot body to rotate about said pin on said base plate and release said toe holding member from the ski boot toe.

4,061,359
VEHICLES
Edward Geoffrey Metcalfe, and Walter Henry Ward, both of Vereeniging, South Africa, assignors to Massey-Ferguson Services N.V., Curacao, Netherlands Antilles
Filed Apr. 19, 1976, Ser. No. 678,177
Claims priority, application United Kingdom, Apr. 18, 1975, 16225/75
Int. Cl.² B62D *21/14*
U.S. Cl. 280—638 **9 Claims**

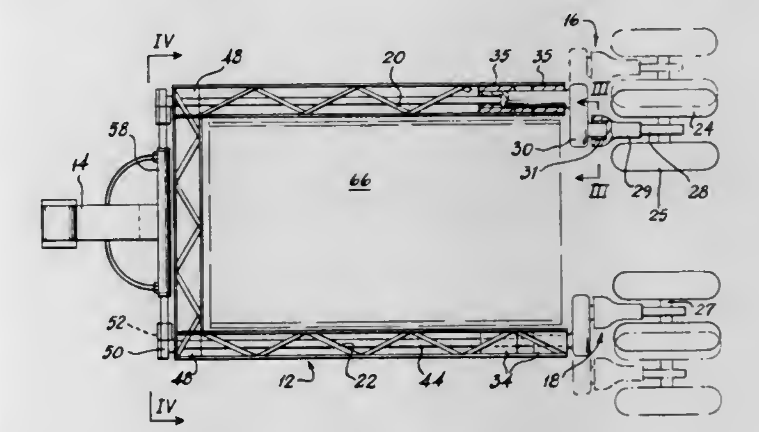

1. A vehicle comprising a frame having a forward portion and two side portions, at least one support assembly attached to each side portion of the frame, each support assembly including at least one generally horizontal fore and aft extending torque shaft rotatably mounted on the frame, a crank arm secured to one end of the torque shaft, a wheel assembly pivotally attached to the crank arm and adjusting means to hold the torque shaft in one of at least two positions to position the wheel assembly laterally relative to the frame.

4,061,360
COLLAPSIBLE GOLF BAG CART
Frank E. Evans, and Dorothy D. Evans, both of 645 Cheowa Circle, Knoxville, Tenn. 37919
Filed Feb. 23, 1976, Ser. No. 660,145
Int. Cl.² B62B *11/00*
U.S. Cl. 280—652 **10 Claims**

1. A golf bag cart comprising a frame, a pair of wheels supporting said frame for movement along a supporting surface, means on said frame supporting at least one golf bag, and handle means connected with the frame for enabling manual control and manipulation of the cart, said frame being foldable and including means engaging and securing the wheels to the frame when in extended position and releasing the wheels in response to movement of the frame to a folded condition for enabling storage of the wheels and frame in a compact condition, each of said wheels being provided with an axle projecting laterally from each side of the wheel, each end of each axle including a sleeve rigid thereon with each end of the sleeve having a flange rigid therewith, said frame including a pair of U-shaped frame assemblies having the end portions of the legs

pivotally connected to enable the bight portions to pivot from a position generally alongside of each other to a position with the legs disposed in angular relation, said means securing and releasing the wheels including hook-like members on the free

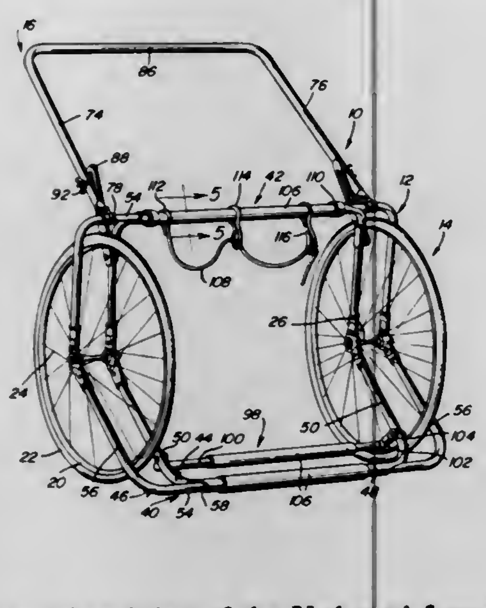

end portion of each leg of the U-shaped frame assembly and including facing notches which coact with each other for gripping engagement with the sleeves on the wheel axles when the U-shaped frame assemblies are pivoted so that the legs are disposed in angular relation to each other.

4,061,361
VEHICLE SUSPENSIONS
J. Phil Felburn, P.O. Box 2344, Arlington, Va. 22202
Filed Apr. 14, 1976, Ser. No. 677,049
Int. Cl.[2] B60G *19/02*
U.S. Cl. 280—681 **18 Claims**

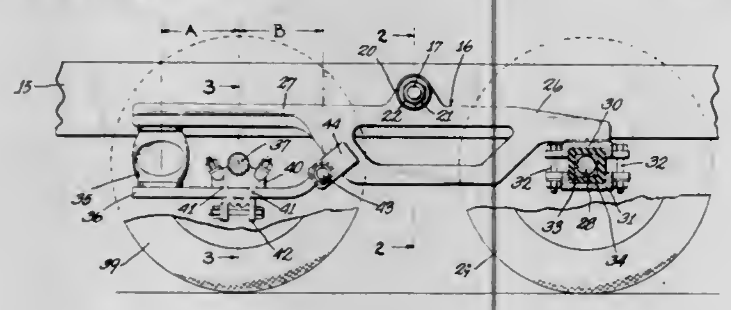

1. A suspension for a vehicle having a frame including a pair of laterally spaced, longitudinally extending channels, comprising:
a pair of walking beams, each pivoted intermediate its ends to a respective channel to extend generally parallel thereto, said walking beams having one set of common ends on one side of the pivot and another set of common ends on the other side of the pivot,
a first axle secured crosswise to respective ones of said one set of common ends and supporting a road-engaging wheel,
a pair of support arms, each pivotally associated with a respective one of said walking beams,
a pair of air bags, each disposed between and having its opposite ends connected to a support arm and a respective one of the other set of common ends of said walking beams, each air bag and its related support arm and walking beam end combining to support a second axle, and a road-engaging wheel supported by said second axle,
each support arm having one end pivotally connected to its related walking beam below the latter's pivot and in a direction toward the related air bag, each support arm underlying and vertically spaced from the related walking beam end, the related air bag being disposed in the vertical space.

4,061,362
REAR AXLE STABILIZER
Ernst Bufler, Wolfsburg, Germany, assignor to Volkswagenwerk Aktiengesellschaft, Germany
Filed May 13, 1976, Ser. No. 686,009
Claims priority, application Germany, May 24, 1975, 2523121
Int. Cl.[2] B60G *11/00, 21/00*
U.S. Cl. 280—689 **3 Claims**

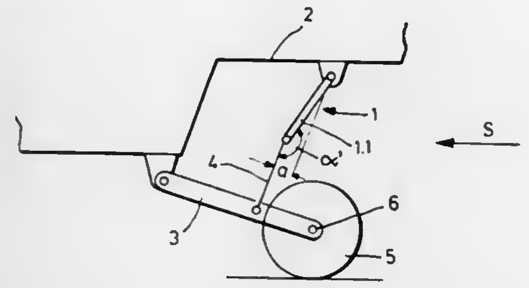

1. A stabilizer for use in conjunction with the rear axle of a vehicle having a chassis, wherein said axle is flexibly mounted to said chassis, comprising a U-shaped stabilizer bar, having a midsection and two arms, and tie rods pivotally mounted to each of said arms, said stabilizer being pivotally mounted between said chassis and said axle by said tie rods and said midsection, said stabilizer having selected dimensions and mounting locations to form an angle between said tie rods and said arms, measured in a plane perpendicular to said axle, of approximately 90° when said vehicle is assembled and fully loaded, resulting in a first leverage for converting rolling forces of said vehicle into torsion forces on said stabilizer bar, and causing said stabilizer bar to exert a first roll-restoring moment between said chassis and said axle, said angle increasing to more than 135° when said vehicle is unloaded but fully assembled, resulting in a second and lower leverage for converting said rolling forces into torsion forces on said stabilizer bar, and causing said stabilizer bar to exert a second and greater roll restoring moment between said chassis and said axle.

4,061,363
TRAILER SUSPENSION
Cedric Brian Symons, and Kenneth Brian Symons, both of 59 Narinna Ave., Cumberland Park, South Australia, Australia
Filed June 2, 1976, Ser. No. 635,408
Int. Cl.[2] B60G *5/00*
U.S. Cl. 280—718 **6 Claims**

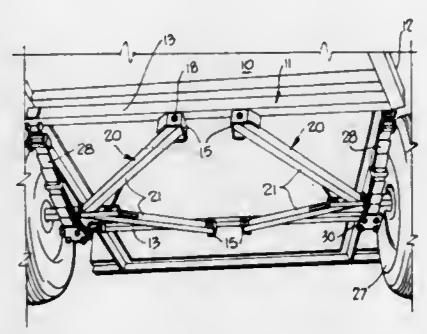

1. A trailer suspension and chassis construction, comprising a chassis, at least one pair of Y-shaped wheel frames each of which has a pair of frame members, means joining the frame members together at one end to diverge therefrom, and a wheel axle projecting from the joined ends,
pivot means joining the divergent ends of the frame members of each respective wheel frame to the chassis for independent pivotal movement of the frames about axes which extend longitudinally with respect to the direction of travel,
a respective leaf spring fixed intermediate its ends with respect to each said wheel axle, abutment pads on the chassis, the leaf spring ends abutting respective said abutment pads, each said abutment pad being of inverted "U"-shape and having a pair of depending flanges which flank a respective said spring end, the space between said flanges exceeding the width of the spring end flanked thereby to allow the spring end to slide back and forth on the abutment pads and to have a slight sideways movement, and further comprising bearing means joining respective said abutment pads to said chassis for pivotal movement of the abutment pads about longitudinally extending axes.

4,061,364
LEAF SPRING SUSPENSION SYSTEM
Robert R. Parks, Warren, Mich., assignor to General Motors Corporation, Detroit, Mich.
Filed Apr. 29, 1976, Ser. No. 681,540
Int. Cl.[2] B60G *11/04*
U.S. Cl. 280—718 **4 Claims**

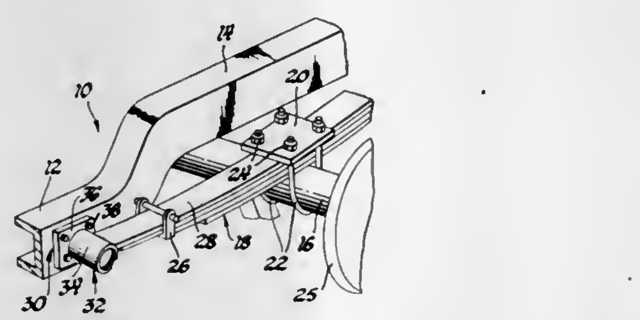

1. A compliant hanger mechanism for use on a vehicle having a side frame having a side surface, a pair of rear wheels, a rear axle mounting said rear wheels, a set of leaf springs mounting said rear axle, said leaf spring set including a main leaf spring and a spring eye-end at the end of said main leaf spring; said hanger mechanism comprising: a housing; a mounting flange on one end of said housing; means for fastening said mounting flange to said side surface; a slot extending along the side of said housing; rubber bushing means within said housing, said bushing means including two end portions, side portions extending from said end portions, and a slot extending along said side portions in alignment with said housing slot whereby said main leaf spring extends through said slots with said spring eye-end retained within said bushing means; and means on the other end of said housing for retaining said bushing means therein, whereby said fastening means preloads said bushing means within said housing with one of said ends of said bushing means engaging said retaining means and the other of said ends of said bushing means engaging said side surface to permit a predetermined lateral movement of said spring eye-end to provide lateral force compliance steer of said rear wheels.

4,061,365
SAFETY SYSTEM FOR PROTECTION OF AUTOMOTIVE SEAT OCCUPANT
Toshio Nagano, Tachikawa, and Kazuo Kuramoto, Koganei, both of Japan, assignors to Nissan Motor Co., Ltd., Yokohama, Japan
Filed Nov. 25, 1975, Ser. No. 635,087
Claims priority, application Japan, Nov. 29, 1974, 49-137928; Nov. 29, 1974, 49-137929
Int. Cl.[2] B60R *21/10*
U.S. Cl. 280—745 **10 Claims**

1. In combination with an automobile the body of which includes a seat supported on a floor, a door adjacent the outboard side of the seat, a first body member located forwardly of and distant from the seat and a second body member located substantially upwardly of the door, a safety system for protecting an occupant of the seat, comprising:
a frame member secured to the first body member and a cushioning member attached to and covering a surface of said frame member facing the front edge of the seat, said cushioning member being shaped and arranged such that the knees and legs of the occupant in the seat come into contact with said cushioning member when the lower half of the occupant's body moves forwards; and
a passive safety belt assembly comprising (a) a guide rail secured to the second body member and located generally upwardly of the door, the front and rear ends of said guide rail being located forwardly of the front edge of the seat and rearwardly of the rear end of the seat, respectively, (b) a carrier member slidably engaged with said guide rail, (c) a safety belt coupled with said carrier member and supported at a first end thereof on the floor at a location close to the rear end of the inboard side of the seat, a second end of said belt being held substantially on the axis of said guide rail, (d) a retractor stationarily arranged to hold one said second end of said belt, said retractor being of a type capable of automatically retracting and locking said belt in a collision of the automobile, a buckle fixed to said carrier member and an anchor member connected to said end of said belt and detachably coupled with said buckle said retractor being located close to the rear end of the inboard side of the seat and connected to said first end of said belt, (e) drive means for selectively bringing said carrier member to first and second positions respectively close to said front and rear ends of said guide rail, and (f) control means for controlling the operation of said drive means such that said carrier member is brought to said first position when the door is opened and to said second position when the door is closed, said first and second

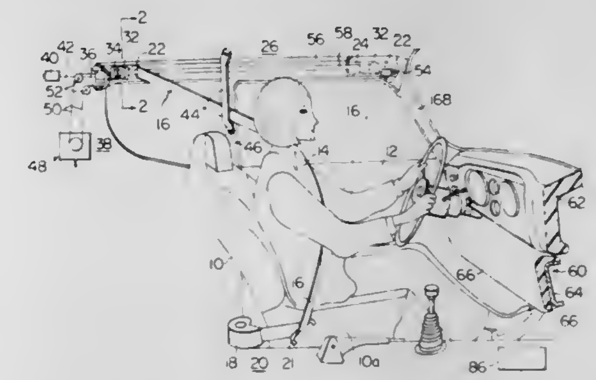

positions and the length of said belt being arranged such that said belt is slackened when said carrier member is in said first position and passed diagonally around the upper half of the seated occupant's body to extend from the waist of the occupant on the inboard side to the shoulder on the other side when said carrier member is in said second position, wherein said drive means comprises a reversible motor, a drive pulley, an idler pulley located forwardly of said first position, and a rope tensioned and passed around said drive pulley to extend therefrom towards said guide rail, one end of said rope being connected to said carrier member, the other end of said rope being connected to said carrier member after being passed around said drive pulley and said idler pulley, and wherein said control means comprise a first power circuit having first contacts to revolve said motor in the positive direction when said first contacts were closed, a second power circuit having second contacts to revolve said motor in the negative direction when said second contacts are closed, a first control circuit having in series with one another a first solenoid coil causing said first contacts to close when excited, a first door switch closing only when the door is open and a first limit switch opening only when said carrier member is in said first position, a second control circuit having in series with one another a second solenoid coil causing said second contacts to close when excited, a second door switch opening only when the door is open and a second limit switch opening only when said carrier member is in said second position.

4,061,366
CONNECTOR
Stephen N. Affa, 23517 Ladeene, Torrance, Calif. 90505
Filed Oct. 1, 1975, Ser. No. 618,507
Int. Cl.^{2} F16L *17/00*
U.S. Cl. 285—37 **6 Claims**

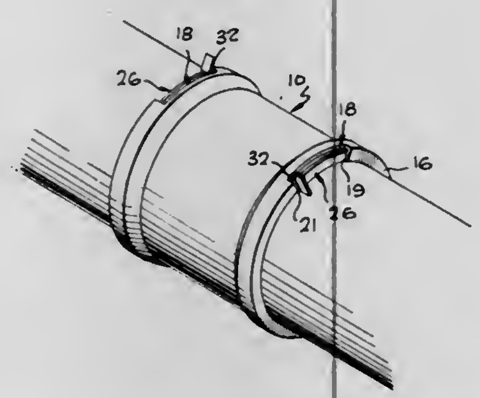

1. A manually operable high pressure tubular gas connector for aircraft comprising a connector sleeve and a connector tube, said connector sleeve having opposed ends and wall formations shaped to form a radially extending inwardly open groove, said inwardly open groove having opposed radially projecting planar walls communicating with the inner surface of the connector sleeve, a planar radially inwardly projecting circular flange on at least one end of the connector sleeve forming a planar wall of said inwardly open groove, a part of said circular flange removed to provide an external spiral lock ring receiving opening to said groove, the arc length of said opening small in comparison to the circumference of said flange but sized to permit a spiral lock ring to be wound through said opening into said inwardly open groove, said connector tube having a flange thereon, said flange having at least one planar radially projecting wall facing said circular flange for engagement with a spiral lock ring, said connector tube mounted inside the connector sleeve with said flange of said connector tube positioned inside said connector sleeve beyond the axial location of said inwardly open groove, a spiral lock ring formed from flat spring material associated with said connector sleeve, the diameter of said spiral lock ring generally equal to the internal diameter of the depth of the groove, said spiral lock ring having planar walls and a thickness generally equal to the width of said groove whereby the planar walls of the groove engage and support the planar walls of the spiral lock ring to prevent vibration movement of the spiral lock ring in said groove, the walls of the spiral lock ring having a length generally larger than the depth of said groove, said spiral lock ring removably positioned in said groove through said opening so a portion of said planar walls of the spiral lock ring projects inwardly beyond the depth of said groove to close the opening in said flange and to provide a wall for continuous abutment with the planar wall of the flange on the connector tube to releasably hold the connector sleeve and connector tube together whereby the connector tube can be locked in the sleeve whenever the flange on the connector tube is located anywhere inside the connector sleeve beyond the inwardly open groove and the spiral lock ring is then wound into said groove so the connector sleeve and the connector tube can be connected together without precisely positioning the connector tube inside the connector sleeve, the walls of the spiral lock ring sufficiently flexible to permit the spiral lock ring to be manually wound through said opening in said flange into said groove against a resistance which is generally constant and independent of the number of turns of the spiral lock ring, the size of the connector sleeve, and the size of the connector tube, whereby the connector sleeve and the connector tube can be manually connected together in the dark without tools.

4,061,367
LOCKRING TUBE JOINT
Kurt O. Moebius, P.O. Box 2339, Palos Verdes Peninsula, Calif. 90274
Continuation-in-part of Ser. No. 500,604, Aug. 26, 1974, abandoned, which is a continuation-in-part of Ser. No. 331,319, Feb. 9, 1973, Pat. No. 3,893,720. This application Sept. 12, 1975, Ser. No. 612,932
Int. Cl.^{2} F16L *13/14*
U.S. Cl. 285—382.2 **12 Claims**

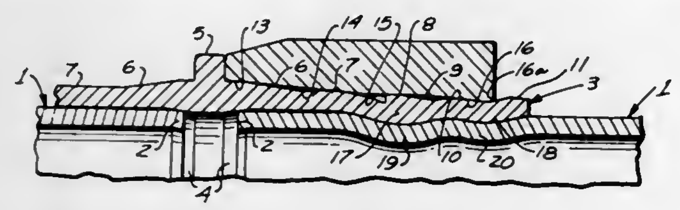

1. A lockring tube joint, comprising:
a. a lockring having internally at least a larger and a smaller tapered zone and a cylindrical zone disposed between and joining the smaller end of the larger tapered zone and the larger end of the smaller tapered zone, whereby the lockring has internally a larger end and a smaller end, the zones being of approximately equal axial length;
b. an outer tube member having peripherally distributed projection means of less axial extent than each of said zones, the effective diameter of which approximates the internal diameter of the larger end of the lockring;
c. an inner member initially slidable within the outer tube member;
d. said lockring adapted to be forced axially on the outer tube member, the larger tapered zone, on initial movement, causing the lockring to effect radially inward deflection of the projection means and the underlying portion of the outer tube member to effect interlocking engagement between the outer and inner members;
e. said lockring, on further movement, causing the cylindrical zone to slide on the projection means while maintaining said interlocking engagement;
f. said lockring, on continued movement, causing the smaller tapered zone to constrict an axial end of the outer tubular member to effect a second interlocking engagement between the outer and inner members;
g. the axial force to effect movement of the lockring and cause said second interlocking engagement between said inner and outer members being confined essentially to the constricting force applied to the axial end of the outer member and the frictional force between the cylindrical zone and the projection means.

4,061,368
COUPLING FOR SPIRAL DRAIN PIPE
Robert Sinbad Auriemma, R.D. No. 1, P.O. Box 104, Bethel, Pa. 19507
Filed Sept. 25, 1975, Ser. No. 616,869
Int. Cl.^{2} F16L *25/00*
U.S. Cl. 285—383 **7 Claims**

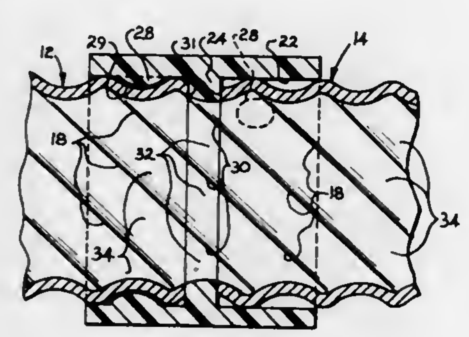

1. A coupling for joining lengths of spiral pipe comprising a body having a cylindrical opening extending therethrough and defining an inner cylindrical surface, an interior flange projecting from the surface and extending at least partially around a circumference of the surface approximately midway between the ends of the opening, the flange including side walls extending inwardly from the surface and facing the ends of the opening and a top surface between the flange sidewalls made up of a series of sinuous recesses and crests extending along the length of the flange, and a pair of locking projections each projecting from the cylindrical surface, the flange being located between the projections, each projection extending a circumferencial distance around the cylindrical surface less than the circumferencial spacing between two adjacent recesses on the flange and a work surface located a distance from the surface equal to or less than the maximum height of the flange crests above the cylindrical surface less the minimum height of the flange recess above the cylindrical surface, the projections having a circumferential extent less than the spacing between adjacent recesses on the flange, each projection lying on a spiral traced on said surface and extending through a crest on the flange whereby, upon rotation of lengths of spiral pipe into the ends of the coupling the projections fit within the exterior spiral recesses in the pipe and the work surfaces engage the recesses to hold the ends of the pipes flush against the side walls of the flange and in alignment with the flange crests and recesses.

4,061,369
CATCHES
John P. Palmer, Reading; Stephen W. Isbister, Maidenhead, and John D. F. Elvin, Wokingham, all of England, assignors to ITW Limited, Slough, England
Filed June 17, 1975, Ser. No. 587,763
Claims priority, application United Kingdom, July 8, 1974, 30170/74
Int. Cl.^{2} E05C *1/08*
U.S. Cl. 292—163 **4 Claims**

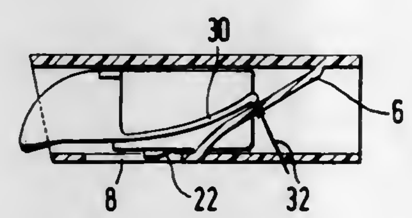

1. A two-piece plastic catch comprising an elongated plunger member and a centrally rectangular hollow open ended box-like guide member, the plunger member being complimentary to and able to reciprocate in the guide member, with a cam-shaped nose of the plunger member extending out of the guide member, each of the members being a single moulding of a plastics material, said plunger member including at least one tongue which extends primarily in the direction of relative reciprocation of the members and is resiliently flexible transversely to that direction, each tongue engaging cam means on the said guide member in such a manner that a force acts on the tongue of said plunger member having a component parallel to the direction of relative reciprocation of the members which urges the members towards a limit of relative reciprocation at which the extension of the nose out of the guide member is greatest, whereby if the nose is displaced into the guide member and is thereupon released then the plunger member returns to the said limit, said plunger member having a centrally located operating tail of less width than the nose, there being two of the said tongues carried on the plunger member at each side of the tail, the said cam means is constituted by two cams on the guide member with each of said cams being a web angularly disposed in the direction of reciprocation of the members and each extending inwardly in cantilever fashion from opposite side walls of said guide member in such a disposition that the free ends of the tongues are in opposition to and ride up said cams when the plunger member reciprocates into the guide member, and flange means for mounting said guide member on a workpiece.

4,061,370
WINDOW LATCH
Peter Fritz Hauber, Burbank, Calif., assignor to Reflectolite Products Inc., Sun Valley, Calif.
Filed Feb. 26, 1976, Ser. No. 661,476
Int. Cl.^{2} E05C *1/10, 1/04*
U.S. Cl. 292—175 **4 Claims**

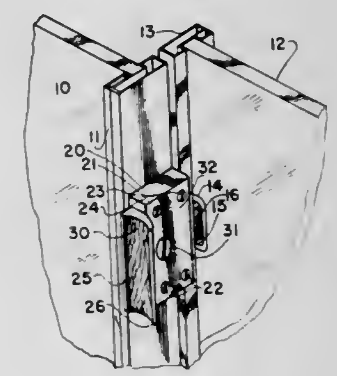

1. A latch assembly comprising a body adapted to be attached to a window or door frame;
said body including a transverse aperture therethrough;
a unitary handle-latch member extending through said transverse aperture with a latching surface extending from said body on one side thereof and a handle extending from said body on the opposite side thereof;
said handle-latch member including a keyhole shaped aperture therethrough with an enlarged portion of said keyhole-shaped aperture positioned in the intermediate region of said handle-latch member between said handle and said latching surface with the enlarged portion nearer the handle and a constricted portion of said keyhole shaped aperture nearer the latching thereof;
a circular aperture in said body on one side of said handle-latch member communicating with said transverse aperture and said keyhole shaped aperture;
a locking member having a cylindrical portion of a size corresponding to said enlarged portion and being received within said circular aperture, said locking member including a substantially rectangular locking arm affixed to one end thereof with a portion of said arm extending laterally from said cylindrical portion, said arm dimensioned to have a width corresponding to said constricted portion and to rest in said keyhole shaped aperture when in unlocked position and with only the cylindrical portion thereof extending through the enlarged portion of the keyhole shaped aperture when depressed and rotated in the order of 90° to a locked position;
said body including a recess on the other side of said handle-latch member into which the arm of said locking member may be extended normal to the direction of movement of said handle-latch member;
a surface on said body engaging said arm when so extended and limiting the movement of said handle-latch member in the latch releasing direction;
said locking member operative in said locked position to prevent movement of said handle-latch member by engagement of the cylindrical portion thereof with the enlarged portion of the keyhole shaped aperture in said handle latch member;
said arm when in the locked position preventing withdrawal of the cylindrical portion from the enlarged portion of the keyhole shaped aperture;
said arm extends within said constricted portion of said keyhole shaped aperture in said handle latch member when in an unlocked position;
said arm having a length less than the length of said keyhole shaped aperture;

whereby the length of said arm limits the extent of unlocking movement of said handle-latch member;
first spring means urging said handle-latch member into a locking position; and
second spring means partially ejecting said locking member from said body when in an unlocked position.

4,061,371
SELF-LOCKING DEVICES
Joseph E. Prather, Bernardsville, and Ramzi A. Khalifa, Rutherford, both of N.J., assignors to Edson Tool & Manufacturing Company, Inc., Belleville, N.J.
Filed Feb. 17, 1976, Ser. No. 658,265
Int. Cl.^{2} E05C *3/04*
U.S. Cl. 292—198 15 Claims

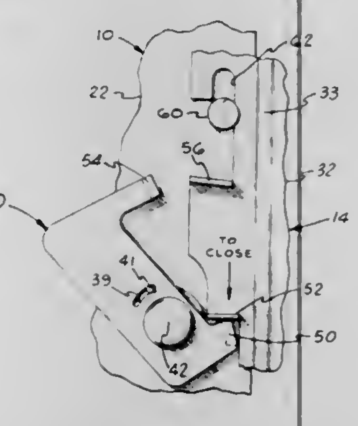

1. A self-locking device for locking a first enclosure member to a second enclosure member, or for unlocking the same, comprising:
a first enclosure member; a second enclosure member; a self-locking latching member rotatably mounted on said first enclosure member; and a rotatable actuating means rotatably mounted on said first enclosure member for rotating said self-locking latching member;
said self-locking latching member having a first ear thereon, capable of preventing said second enclosure member from movement in a first or opening direction, and a second ear thereon capable of preventing said second enclosure member from movement in an opposite direction, whereby said second enclosure member is locked with respect to said first enclosure member;
said second enclosure member having a first heel thereon adjacent to and facing said first ear on said self-locking latching member and a second heel thereon adjacent to and facing said second ear on said self-locking latching member;
a face on said first heel of said second structural member; and a face on said first ear of said rotatable self-locking latching member, said face on said first heel being so angularly positioned and in such spatial relationship with respect to said face on said first ear and with respect to the center of rotation of said rotatable self-locking latching member during the closed position of said enclosure members that forcible movement of said face on said first heel against said face on said first ear in said first or opening direction causes said first heel to move and to abut against the face on said first ear with a relatively large force on said rotatable self-locking latching member but which force is essentially radial in direction with respect to the center of rotation of said rotatable self-locking latching member and thus creates essentially no rotational force on said rotatable self-locking latching member, whereby movement of said second enclosure member in said first or opening direction is prevented and the closed position of said enclosure members is maintained;
said rotatable actuating means being capable of rotating said self-locking latching member, whereby said second ear on said self-locking latching member contacts said second heel on said second enclosure member and forcibly moves it in said first or opening direction, while said first ear on said self-locking latching member is being simultaneously rotated out of the way of said first heel on said second enclosure member to permit movement of said second enclosure member in said first or opening direction to open and to unlock said second enclosure member from said first enclosure member;
and said second heel on said second enclosure member being subsequently capable of being moved in said opposite direction to contact said second ear on said self-locking latching member to forcibly rotate said self-locking latching member in a direction opposite to that of the first rotation, whereby said second enclosure member returns to its original closed and locked position with respect to said first enclosure member, being automatically locked therein by said first ear and said second ear of said self-locking latching member.

4,061,372
SECONDARY LOCK FOR SLIDING DOOR OR WINDOW
LeRoy A. Cardoso, Sacramento, Calif., assignor to Blomberg Glass, Sacramento, Calif.
Filed Apr. 5, 1976, Ser. No. 673,666
Int. Cl.^{2} E05C *3/04*
U.S. Cl. 292—207 9 Claims

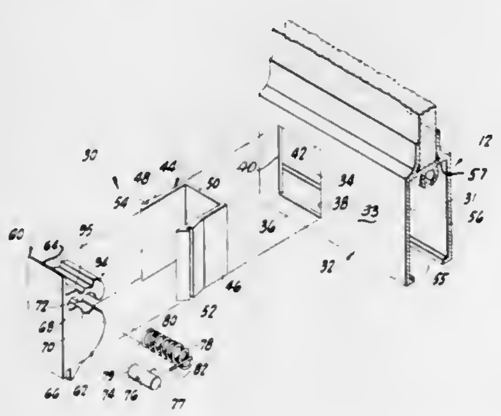

1. A lock for a sliding closure including a sliding vent movable in a plane parallel to a fixed vent having a panel with a front surface facing said plane and a back surface, the panel being formed with a rectangular aperture defined by a plurality of edges including a pivot edge, said lock comprising:
a. a stop member pivotally mounted on said pivot edge and being rockable between an unlocked position in which said sliding vent clears said stop member upon opening movement of said sliding vent and a locked position in which said sliding vent is immobilized by engagement with said stop member, said stop member including a pin retaining hole formed therein parallel to said pivot edge of said aperture in said panel, said stop member further including a spring retaining hole formed therein in a direction parallel to said pin retaining hole, said stop member being further formed with a slot connecting said pin retaining hole and said spring retaining hole;
b. a pin slidable in said pin retaining hole;
c. a compression spring housed in said spring retaining hole in said stop member urging one end of said pin to protrude from said stop member, said one end of said pin protruding from said stop member and being laterally disposed between said front surface of said panel and said plane when said stop member is in locked position, said spring being connected to said pin through said slot; and,
d. a housing having first and second parallel walls perpendicularly extending from said back surface of said panel from the edges of said panel defining said rectangular aperture which are perpendicular to said pivot edge, said stop member being rockable between and in a direction parallel to said first and second walls;
said one end of said pin being urged by said spring into abutment with said first wall when said stop member is in unlocked position; an end of said spring abutting said second wall in both unlocked and lock position of said stop member.

4,061,373
DOOR LATCH DEVICE
Alan E. Revell, Louisville, Ky., assignor to American Air Filter Company, Inc., Louisville, Ky.
Filed May 5, 1976, Ser. No. 683,538
Int. Cl.^{2} E05C *5/04*
U.S. Cl. 292—251 7 Claims

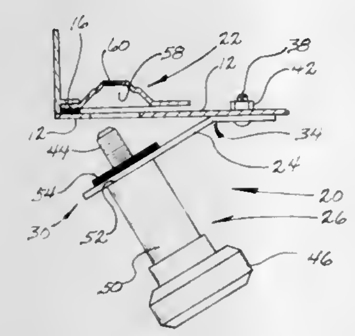

1. A door latch device for securing a door in place over an enclosure defined opening, the door latch device comprising:
a. a latch mechanism comprising:
an elongated resilient retainer having an elongated aperture proximate one end with the longitudinal axis of the elongated aperture being coextensive with the longitudinal axis of the elongated retainer, the end of the elongated resilient retainer having the elongated aperture being disclosed at a predetermined angle to the other end of the elongated resilient retainer;
means for attaching the other end of the elongated retainer to the door;
a screw-type fastener having a threaded shank extending through the elongated aperture in the retainer;
manipulating means disposed at one end of the threaded shank; and,
means for attaching the screw-type fastener in the elongated aperture while allowing the screw-type fastener to rotate about its longitudinal axis and move along the longitudinal axis of the aperture comprising:
shoulder means disposed on the shank of the screw-type fastener for abutting one side of the elongated resilient retainer; and,
a resilient body keeper means having an aperture therethrough of a smaller diameter than the diameter of the shank of the screw-type fastener, the shank of the screw-type fastener protruding from the other side of the elongated resilient retainer, the shoulder means being coaxially receivable through the aperture in the resilient body keeper means displacing some of the material of the resilient body defining the aperture therethrough thereby causing the resilient body to tightly grip the shank of the screw-type fastener to captively hold the elongated resilient retainer between the resilient body keeper means and the shoulder means;
b. a latch plate securable to the enclosure defining opening comprising:
means defining a depression in the plate; and,
means defining a threadable aperture through the plate in the depression, the threads of the aperture conform to the threads of the screw-type fastener so as to threadably receive the shank of the fastener.

4,061,374
WIDTH-MAINTAINING CYLINDER
Jack G. Altmann, Tann-Rueti, Switzerland, assignor to G. Hunziker AG, Rueti, Switzerland
Filed June 10, 1976, Ser. No. 694,711
Claims priority, application Switzerland, June 24, 1975, 8217/75
Int. Cl.^{2} B65H *17/20*
U.S. Cl. 308—1 R 8 Claims

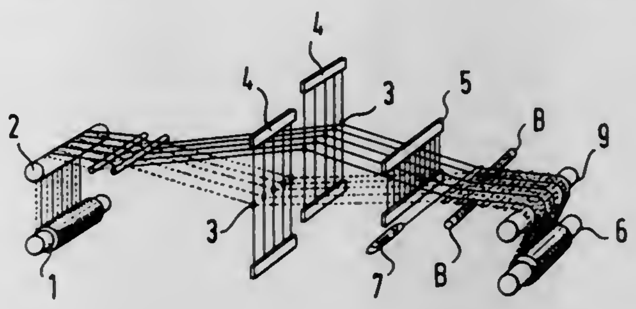

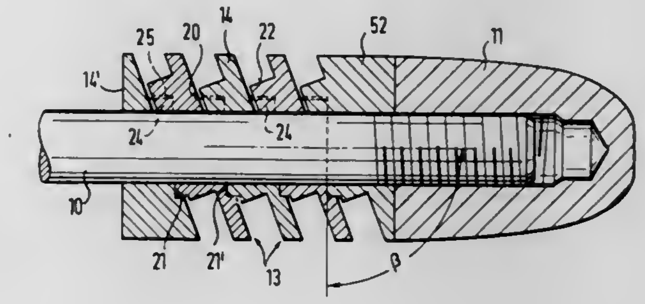

1. In a width-maintaining cylinder having at least one bearing arranged on a support at an angle to the longitudinal axis, the bearing having a flange and a circular cylindrical bearing surface for a small wheel set at an angle, wherein the bearing has contact surfaces on both sides and can be clamped on the support between two tensioning elements, the improvement comprising wherein the contact surfaces of the bearing, which can be pressed again one another, are at right angles to the longitudinal axis of the support.

4,061,375
MOULDED PLASTIC DRAWER SLIDE
Paul M. Mertes, 15528 Don Metz St., Granada Hills, Calif. 91344
Continuation-in-part of Ser. No. 576,349, May 12, 1975, abandoned. This application July 12, 1976, Ser. No. 704,649
Int. Cl.^{2} F16C *21/02*
U.S. Cl. 308—3.6 12 Claims

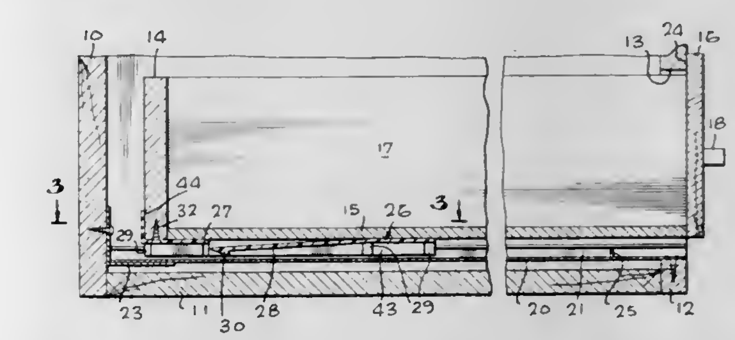

1. A universal drawer slide to be secured to the rear bottom of a drawer to engage a matching track, said drawer slide comprising:
a delta shaped moulded plastic body member;
two downwardly depending guides each being of generally L-shaped cross section, for engaging a matching track, extending substantially the length of said member;

an upwardly directed flange for overlying the rear end of a drawer;

said delta shaped body member having its widest portion at the rear of the drawer and its narrowest portion towards the front thereof, and said widest portion extending a substantial distance on either side of said downwardly depending guides; and

an integrally moulded hook formed of a length of plastic mounted between said two guides and resiliently pivotted to extend toward said flange, said hook extending down from said body member and having a beveled surface facing toward said flange to slide over a stop as the drawer is being mounted, and further including means opposite said bevel for positively engaging said a stop, subject however to release by pressure applied to the exposed length of the hook to raise said engaging means over said stop.

4,061,376

ROCK BIT BEARING STRUCTURE

Arthur A. Villaloboz, Huntington Beach, Calif., assignor to Smith International Inc., Irvine, Calif.

Continuation of Ser. No. 695,906, June 14, 1976, abandoned. This application Feb. 15, 1977, Ser. No. 768,944

Int. Cl.[2] **F16C** *19/06*

U.S. Cl. 308—8.2 **26 Claims**

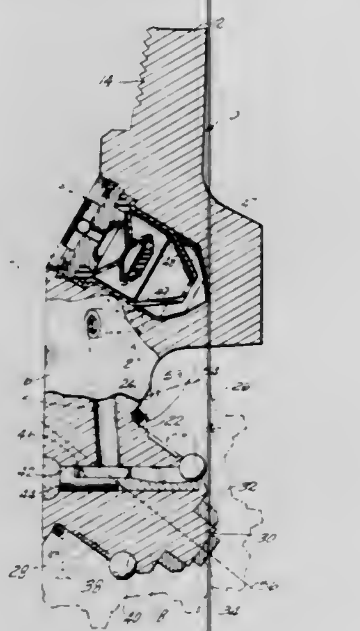

1. A rock bit comprising a drill bit body having a journal bearing spindle shaft, a rotary cutter cone rotatably supported on the shaft, the shaft having a cylindrical bearing portion, the cutter cone having a cylindrical bore extending around the bearing portion for forming a friction bearing, the bearing portion of the shaft having a shallow groove extending around the periphery thereof, bearing metal applied in the groove over less than about half the circumference of the groove, the bearing metal forming a surface flush with said cylindrical bearing portion, a pressure compensating grease reservoir in the bit body, and a passage connecting the grease reservoir to the groove.

4,061,377

BEARING ARRANGEMENT FOR NON-POWERED WHEELS ON VEHICLES

Sigurd Andrew Mauritz Nordström, Sodertalje, Sweden, assignor to Saab-Scania Aktiebolag, Sodertalje, Sweden

Filed June 29, 1976, Ser. No. 700,952

Claims priority, application Sweden, July 7, 1975, 7507754

Int. Cl.[2] **F16C** *35/06*

U.S. Cl. 308—207 R **7 Claims**

1. Bearing arrangement for a non-powered wheel on vehicles of the kind wherein the hub of the wheel has a hub neck which engages in a sleeve which is non-rotatably secured in the vehicle, two roller bearings being arranged between the hub neck and the sleeve, the hub and the roller bearings being held in the assembled position in the sleeve by means of a centrally positioned hub bolt, the improvement wherein each roller bearing has inner and outer rings, said roller bearings having races inclined towards each other, and inner and outer spacer

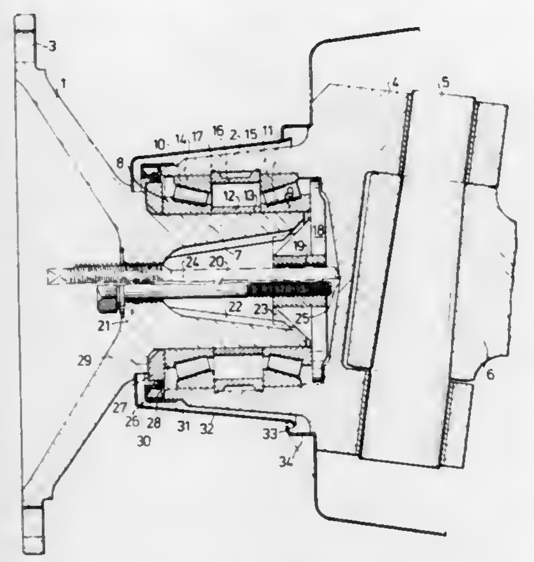

sleeves are arranged between the respective inner and outer rings of the roller bearings, said hub bolt passing freely through a central hole of the hub from the outer side of the same and being screwed into a nut surrounded by the sleeve and locked against axial movement.

4,061,378

CASSETTE TAPE RECORDER HAVING IMPACT ABSORBING MECHANISM FOR COVER PLATE

Shigeru Matsumoto, Yokohama, Japan, assignor to Victor Company of Japan, Limited, Japan

Filed Dec. 23, 1975, Ser. No. 643,759

Int. Cl.[2] **A47B** *81/00*

U.S. Cl. 312—20 **13 Claims**

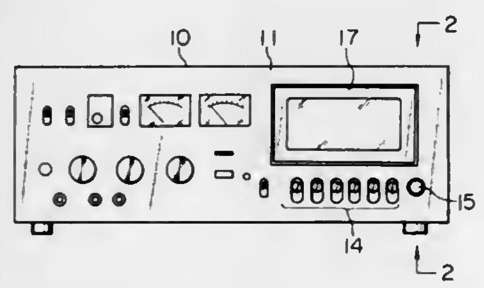

1. A cassette-tape recording and reproducing apparatus comprising, in combination, a housing having an opening for accommodating a tape cassette therein, a cover plate for said opening pivotally supported to be manually rotatable from an open position to a closed position, means for pivotally supporting said cover plate for movement relative to said housing and opening, urging means for constantly urging the cover plate to rotate from said closed position constantly to said open position, locking means for releasably locking the cover plate in said closed position, means manually operable from outside of the housing for selectively releasing the locking means, and a shock absorber connected between the cover plate and the housing to absorb energy developed when said cover plate is rotated from said closed position to said open position by said urging means upon release of said locking means by manual operation of said releasing means.

8. The combination comprising, a housing having a compartment therein open at one side of the housing to receive an article therein, a cover plate pivotally supported by the housing between a first position in which said compartment is open to the atmosphere and a second position in which said compartment is closed thereby, means for urging the cover plate in a direction toward said first position, means for locking the cover plate in said second position, means for releasing the locking means, and a fluid pressure mechanism comprising:

a pair of relatively movable telescoping members, one of said members being connected operatively to the cover plate and the other being operatively connected to the housing such that when the cover plate is in the second position said telescoping members are in an extended position, one of said members having a packing groove, and

a resilient elastic composition packing ring of normally circular cross section positioned in said groove in a resilient, slidable contact with the other element,

one of said members having a bore to receive the other member through an open end, one of said members having an air vent passage communicating the interior of said bore to the atmosphere,

the inner periphery of said packing ring being slightly smaller in circumference than the circumference of the bottom of said groove and the exterior periphery of the packing ring being greater in circumference than the circumference of the cross section of said bore, whereby said packing ring in said groove is in compression when said telescoping members are in a retracted position,

the cross-sectional dimension of said air vent passage being selected such that the pressure within the bore sharply increases when said telescoping members move toward each other upon said locking means being released to thereby absorb the initial force of the urging means.

4,061,379

LOCKER SYSTEM

Lee S. Randall, 222 Crampton Drive, Monroe, Mich. 48161

Filed Jan. 3, 1977, Ser. No. 756,120

Int. Cl.[2] **A47B** *53/00*

U.S. Cl. 312—201 **13 Claims**

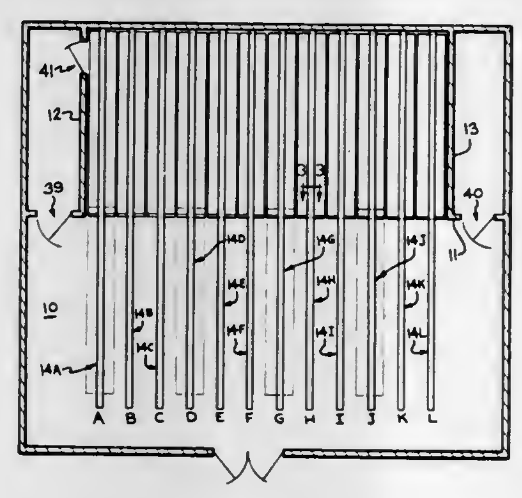

1. A multiple locker storage system comprising, in combination, a plurality of side-by-side adjacent rows of lockers with each row including a plurality of individual adjacent lockers having openings forming the lateral faces of each row, means for moving each row relative to the others in a direction parallel to their lateral faces from a retracted, closed position to an extended, open position, said lockers, when in said retracted, closed position defining a rectangular block with the exposed face thereof formed by the generally co-planar row ends defining a room wall preventing access to the lateral faces of said rows from said room, whereby, when all of said rows are in closed, retracted position said lateral faces of adjacent rows are closely adjacent and opposite each other to prevent access to the lockers therein and whereby, when selected row is moved to open, extended position, its lateral faces are exposed to provide access to the lockers in such extended row.

4,061,380

ROTATIONAL STRAIN RELIEF WITH INLINE PLUG

Joe B. Carnahan, Carrollton, and Robert B. Koenig, Dallas, both of Tex., assignors to Recognition Equipment Incorporated, Dallas, Tex.

Filed Dec. 27, 1976, Ser. No. 754,852

Int. Cl.[2] **H01R** *39/00*

U.S. Cl. 339—8 R **7 Claims**

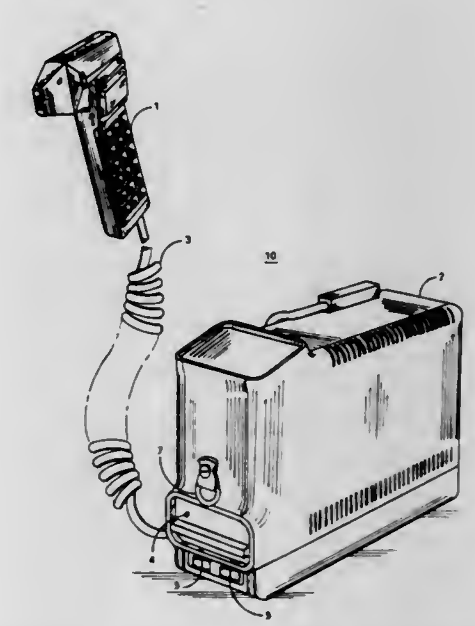

1. An interconnect device for mechanically and electrically joining two bodies in a rotational relationship, comprising a tubular member secured to one of said bodies and extending through the other of said bodies, a bias member cooperating with said tubular member to hold said bodies in an abutting relationship and electrical wires extend through said tubular member into each of said bodies in a manner to permit rotation of one of said bodies in relation to the other.

4,061,381

TWIST PREVENTION DEVICE

Henri Smal, Oupeye, Belgium, assignor to Societe Anonyme FACO, Oupeye, Belgium

Filed July 13, 1976, Ser. No. 704,949

Claims priority, application Belgium, July 18, 1975, 645098

Int. Cl.[2] **H01R** *39/00*

U.S. Cl. 339—8 P **6 Claims**

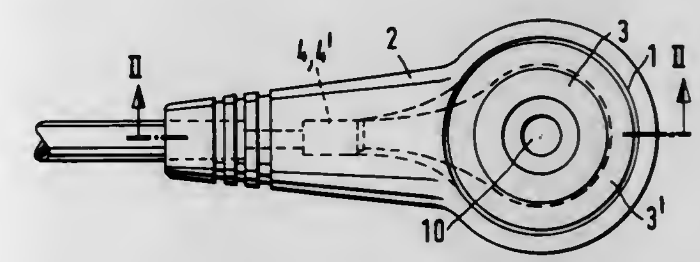

1. A twist prevention device for electrical conductors, comprising

a first connecting means for receiving incoming current and defining an axis,

a second connecting means for transmitting outgoing current from said first connecting means and rotatably mounted relative to said first connecting means,

said first and second connecting means being formed with corresponding stepped section means each having an uppermost narrowest step, and wider steps for permitting easy assembly and disassembly relative to one another,

said first connecting means for incoming current includes cable shoes comprising pear-shaped flat members defining planes extending perpendicularly to said axis and each cable shoe including a neck portion extending laterally away from said axis laterally beyond said stepped section

means, said neck portion connected to a power supply cable at a poinyt laterally spaced away from said stepped section means and each said cable shoe including an annular contact portion located in stepped position with respect to one another relative to the axis of said first connecting means,

said second connecting means for the outgoing current consists exclusively only of two helically wound conductors, each forming a wire spring arranged in stepped position on said wider steps, respectively, of the said second connecting means and separately in contact with said annular contact portions of said cable shoes, respectively, when said first and second connecting means are in the rotatably mounted position, each of said springs constituting an integral wire having a projecting end extending parallel to said axis and extending to outside of said second connecting means,

said second connecting means for the outgoing current comprising a male member and including said upper narrowmost step formed with a threaded hole,

said first connecting means comprising a stepped female sleeve and including said upper narrowmost step having an axial bore therein coaxially aligned with said threaded hole,

said first connecting means being formed with an enlarged opening communicating with said axial bore and forming a screw support surface,

a screw member having a screw head rotatably supported on said support surface of said first connecting means and having a screw shank extending screwed into said threaded hole of said second connecting means terminating spaced above apart from said wider steps, so as to permit relative rotation of said first and second connecting means and to prevent relative longitudinal movement.

4,061,382
DOOR LOCKING MECHANISM FOR COKE OVEN DOOR
Klaus-Peter Dahl, Gelsenkirchen, Germany, assignor to Didier Engineering GmbH, Essen, Germany
Filed Dec. 21, 1976, Ser. No. 753,090
Claims priority, application Germany, Dec. 31, 1975, 2559311
Int. Cl.² E05C *19/00*
U.S. Cl. 292—260 **8 Claims**

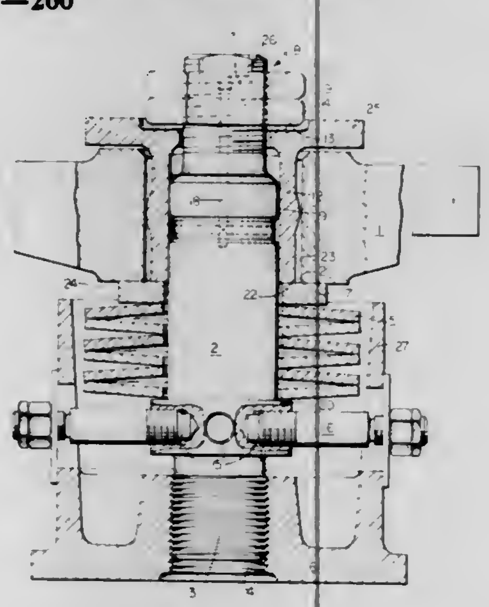

1. A door locking mechanism for locking doors, particularly coke oven doors of the type wherein when in the locked position the door is pressed against a door frame by spring pressure and held in such position by a locking bar engaged against hooks on the door frame, said mechanism comprising:

an integral and single-piece bolt having an inner end adapted to be threaded into a door body of a door to be locked and an outer end;

a sleeve element axially slidably mounted about said bolt;

a locking bar rotatably mounted about said sleeve element with said outer end of said bolt extending outwardly beyond said locking bar, said locking bar having arms adapted to be engaged behind hooks of a door frame of the door to be locked to lock the door;

spring means supported by said bolt and urging said sleeve element and said locking bar outwardly of said bolt toward said outer end thereof;

said sleeve element being movable axially of said bolt toward said inner end thereof to compress said spring means and to thus release the pressure of said spring means from said locking bar, such that said locking bar can be rotated;

means, threaded onto said outer end of said bolt at a position outwardly of said locking bar and contacting said sleeve element, for selectively axially displacing said sleeve element with respect to said bolt and for thereby adjusting the spring pressure of said spring means applied to said locking bar; and

means, at said outer end of said bolt and positioned outwardly of said locking bar, for selectively rotating and axially displacing said bolt with respect to the door and thereby adjusting the circumferential position of said locking bar with respect to the hooks of the door frame, said bolt rotating means being freely accessible from the exterior without removal of said sleeve element displacing means.

4,061,383
AUTOMATICALLY LOCKING CROSSBOLT DEADLOCK
Russell W. Waldo, St. Paul, Minn., assignor to Ideal Security Hardware Corporation, St. Paul, Minn.
Filed Oct. 21, 1976, Ser. No. 734,734
Int. Cl.² E05C *1/16*
U.S. Cl. 292—335 **9 Claims**

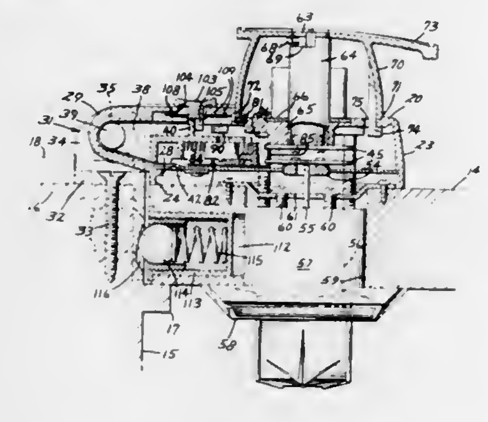

1. A crossbolt deadlock comprising:

a housing adapted to be mounted on a door hinged in a door frame, said housing defining notch means opening generally toward an adjacent portion of the door frame;

a strike adapted to be mounted on the door frame and having apertured lug means for reception in the notch means when the door is closed;

a crossbolt mounted in the housing for linear sliding movements relative to said housing and toward and away from locking engagement with said strike;

an actuator lever in said housing for releasably holding said crossbolt in a position away from engagement thereof with said strike, said actuator lever having an inner end within said housing, an angularly displaced outer end projection outwardly through an opening in said housing and toward the door frame when said housing is mounted on the door, and a crossbolt engaging portion intermediate its ends within said housing;

means pivotally mounting said inner end of the actuator to said housing for swinging movements toward and away from engagement of said crossbolt engaging portion with said crossbolt;

spring means urging said actuator lever in a direction of said swinging movement toward said crossbolt;

said outer end of the actuator lever being disposed to abuttingly engage a portion of said strike spaced from said lug means responsive to closing of the door to move said actuator lever in a direction to disengage the crossbolt engaging portion thereof from said crossbolt against bias of said spring means;

and means for moving said crossbolt into and out of locking engagement with said strike and including a spring yieldingly urging said crossbolt toward engagement with said strike, and a cam rotatably mounted in said housing and operative to move said crossbolt in a strike releasing direction against bias of said spring;

characterized by a recess defined by said crossbolt, a latch, latch mounting means mounting said latch in said housing for moving said latch in a direction transversely of the direction of movement of said crossbolt toward and away from reception of said latch in said recess, said latch being yieldingly biased toward said crossbolt, and a latch releasing element on said actuator lever engaging said latch mounting means for moving said latch out of said recess against the yielding bias applied thereto responsive to movement of said actuator lever toward holding engagement with said crossbolt.

4,061,384
BUMPER HAVING PIVOTAL LOAD SPREADER PLATE FOR DEFLECTING ENERGY ABSORBING MEDIUM
James R. Montgomery, Pendleton, and John S. Saczawa, Jr., Anderson, both of Ind., assignors to General Motors Corporation, Detroit, Mich.
Filed Apr. 29, 1976, Ser. No. 681,534
Int. Cl.² B60R *19/08*
U.S. Cl. 293—71 R **3 Claims**

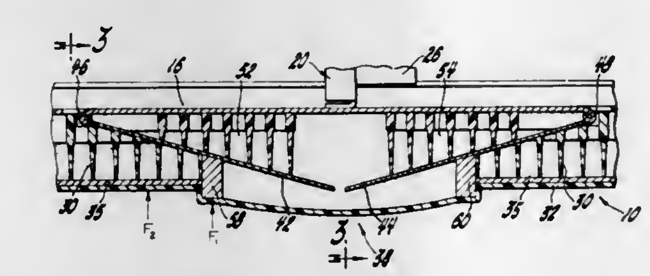

1. An energy absorbing bumper assembly for a vehicle comprising an elongated normally rigid bumper beam supported by a vehicle, deflectable energy absorbing media means mounted on said bumper beam and extending longitudinally thereof a predetermined distance less than the length of said bumper beam and projecting outwardly therefrom, said media means being a wedge shaped block having an inner planar back surface supported on said bumper beam and having an outer planar front surface extending at a predetermined angle with respect to said back surface, a flat load spreader plate aligned with said bumper beam, said plate being of a substantially rigid material disposed along and parallel to the entire front surface of said block and extending at one end beyond the same to a position closely adjacent the bumper beam, means pivotally connecting said one end of said load spreader plate directly to said rigid bumper beam for limited turning movement about a fixed axis of rotation towards said bumper beam in response to an impact load applied to the spreader plate so that the load spreader plate functions as a lever arm to simultaneously deflect the forward portion of the energy absorbing block to increase the energy absorption efficiency thereof and a flexible plastic facia attached to said bumper beam for covering said bumper beam, said load spreader plate and said energy absorbing block.

4,061,385
IMPACT ABSORBING BUMPER
Abraham Schwartzberg, 2931 Sunrise Lakes Drive East Sunrise,, Fort Lauderdale, Fla. 33322
Continuation-in-part of Ser. No. 627,234, Nov. 17, 1975, abandoned. This application Nov. 1, 1976, Ser. No. 738,226
Int. Cl.² B60R *19/10*
U.S. Cl. 293—71 P **2 Claims**

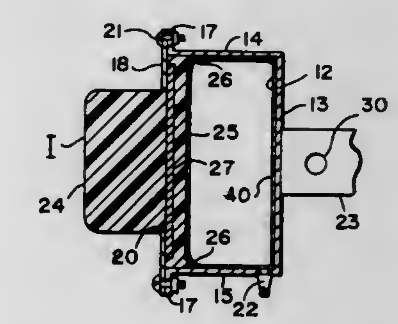

1. An impact absorbing bumper comprising a housing having a front wall, a rear wall, side wall means joining said front and rear walls forming a chamber, said front wall having an opening, substantially resilient impact receiving means extending through said opening, said impact receiving means having an impact receiving portion of substantially the same cross sectional area as said opening positioned outwardly of said front wall to permit the sliding movement of said impact receiving means, a substantially resilient flat wall portion slidably mounted in said chamber and engaging said side wall means, said flat wall portion being substantially larger in cross sectional area than said opening, a plate member mounted in said flat wall portion in said chamber at substantially said opening and between said impact receiving portion and said flat wall portion, a resilient tube positioned in said chamber, said tube having valve means extending through said housing and acting as an inlet for air under pressure into said tube, said tube engaging said side wall means, said rear wall and said resilient flat wall portion whereby impacts received by said resilient impact receiving means is transmitted to said plate member and said resilient flat wall portion to compress said resilient tube as said impact receiving means, said flat wall portion and said plate member are slid inwardly of said chamber and support means secured to said housing for mounting said bumper.

4,061,386
ENERGY MANAGING BUMPER SYSTEM FOR VEHICLES
Ronald Chupick, Warren, Mich., assignor to General Motors Corporation, Detroit, Mich.
Filed Nov. 17, 1975, Ser. No. 632,187
Int. Cl.² B60R *19/02*
U.S. Cl. 293—86 **3 Claims**

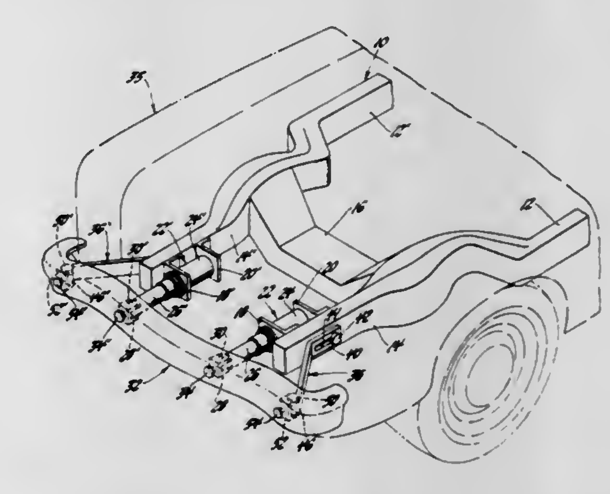

1. An energy managing bumper system for a vehicle having a frame with a pair of laterally spaced longitudinally extending side rails, said system comprising an elongated normally rigid

bumper beam extending laterally across one end of said side rails of said vehicle, a pair of energy absorbing units laterally spaced from each other and yieldable in response to the application of a predetermined impact thereto, said energy absorbing units straddling the center line of the vehicle and operably and directly connecting said bumper beam to said side rails of said vehicle for movement between an extended and a retracted position with respect to said vehicle, a pair of retainer means disposed outboard of said energy absorbing unit and extending forwardly from said side rails, fastener means attaching one end of each of said retainer means directly to a corresponding side rail to prevent the outward movement therefrom, connector means operatively connecting said bumper beam to the forward ends of said retainer means, each of said connector means providing a fixed pivot point for said bumper beam disposed laterally outboard of said energy absorbing units so that each said energy absorbing unit is immediately activated in response to an impact to either end of said bumper beam which causes said bumper beam to turn with respect to either one of said pivot points and move toward the vehicle.

4,061,387
NET-RAISING TOOL
Jon M. Lindbergh, Bainbridge Island, Wash., assignor to Union Carbide Corporation, New York, N.Y.
Filed Sept. 1, 1976, Ser. No. 719,465
Int. Cl.² B65G *7/12*
U.S. Cl. 294—26 **7 Claims**

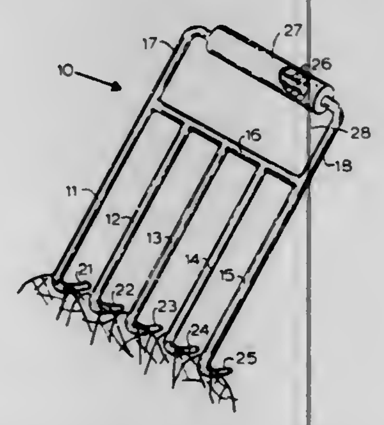

1. A net-raising tool for use in raising a fish net having meshes and laden with fish, comprising
a series of several dull-ended, constant-diameter net-engaging members about one-quarter inch in diameter located in line along substantially a common plane, for exerting an even strain on the net at a corresponding series of meshes,
support means joining said net-engaging members together, and
handle means joined to said support means and spaced from it so as to provide a hand-receiving and hand-protecting opening well spaced from said net-engaging members.

4,061,388
SAFETY BECKET
Alvin H. Wilkinson, Rte. 1, Box 106, Talala, Okla. 74080
Filed Feb. 11, 1977, Ser. No. 767,806
Int. Cl.² B66C *1/36*
U.S. Cl. 294—82 R **2 Claims**

1. An improved hoisting bracket comprising:
an upper body member having an eye in the upper portion for receiving a cable, hook or the like for lifting the bracket, the body having a lower surface and a first opening and a spaced apart second opening, the openings being equidistant from the eye, the second opening being configured as an open top recess in which a horizontal pin may be received therein by downward and lateral movement towards the first opening;
a lower U-shaped shank member having first and second ends in a common plane and having a first opening adjacent the first end and a second opening adjacent the second end, the spacing between the openings in the shank being substantially equal to the spacing between the openings in said body;
first and second links, each having paralleled vertical side plates and paralleled horizontal upper and lower pins, the upper pin of the first link being received in said first body opening and the lower pin in said first shank opening whereby said shank is pivotally attached at the first end to

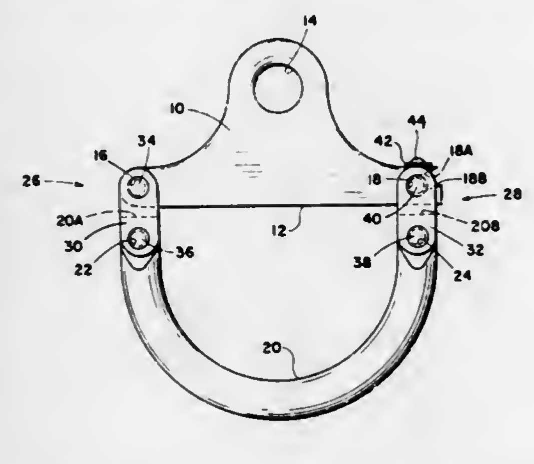

said body and the lower pin of the second link being received in said second shank opening whereby the second link is pivotally supported to the second end of said shank, the upper pin of the second link being slidably positionable into and out of said body second opening when said shank is moved upwardly towards said body and simultaneously laterally in the direction towards said second body opening.

4,061,389
COMBINATION WIRE LINE RELEASABLE OVERSHOT AND PULL TOOL
V. J. Keller, P.O. Box 847, Channelview, Tex. 77530, and William T. Taylor, 222 Camp Lilly Road, Humble, Tex. 77338
Filed July 9, 1975, Ser. No. 594,330
Int. Cl.² E21B *31/12*
U.S. Cl. 294—86.3 **13 Claims**

1. A releasable down hole tool operable on a wireline, comprising
an elongate tubular body adapted to run in a well bore;
an out mandrel slidably positioned about said body;
a connective tool for achieving a down hole operation on relative movement of said body and said mandrel;
a catch means operable on lengthwise movement and cooperative with said body and said body and said mandrel to selectively and releasably repetitively secure said body and said mandrel in first and second relative movement to said connective tool which further operates repetitively between the first and second relative lengthwise positions, each operation occurring on lengthwise movement of said tool and wherein said catch means comprises
1. a groove means formed in said body;
2. a pin carried on said mandrel and captured in said groove means for movement confined therein;
3. wherein said groove means is constructed and arranged in a closed loop enabling repetitive movement as said pin traverses said closed loop; and
4. including means for limiting movement of the pin in said closed loop groove means to traversing said closed loop groove means in a single direction.

4,061,390
ELEVATING ASSEMBLY FOR THE UPPER PLATFORM OF A ROAD TRANSPORT VEHICLE CARRIER
Roger Schall, Kirchheim, France, assignor to Lohr-Construction de Vehicules Industriels S.A., Hangenbieten, France
Filed July 8, 1976, Ser. No. 703,700
Claims priority, application France, July 8, 1975, 75.22906
Int. Cl.² B60P *3/08*
U.S. Cl. 296—1 A **4 Claims**

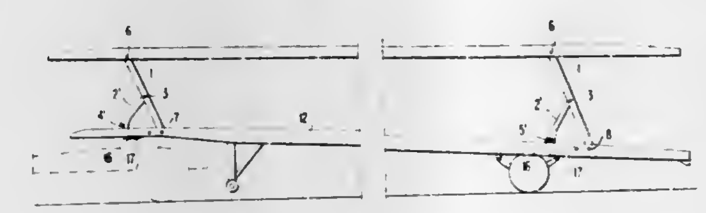

1. In a road transport vehicle carrier having a lower platform and an upper platform and support posts extending from the lower platform to support the upper platform at such a height that vehicles can be accommodated on both platforms when vehicles are being transported on the carrier, the upper ends of the posts being pivotally connected to the upper platform and the lower ends of the posts being movable lengthwise along the lower platform thereby to raise and lower the upper platform, and a strut pivotally connected at its upper end to each post and pivotally connected to the lower platform at a distance from its upper end; the improvement in which the strut is pivotally interconnected with the lower platform intermediate its ends and has an extension arm beyond its pivotal connection to the lower platform, and a ram acting between said extension arm and the lower platform to raise and lower the upper platform.

4,061,391
DRUM SUPPORTING CARRIAGE
Theodore T. Violette, 2603 Wall St., Long Beach, Calif. 90804
Filed Sept. 7, 1976, Ser. No. 720,755
Int. Cl.² B60P *7/00*
U.S. Cl. 296—4 **7 Claims**

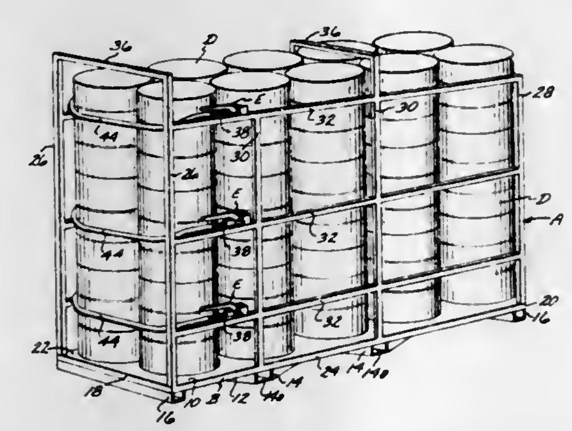

1. A fork lift engageable carriage on which a plurality of stacks of cylindrical drums are removably disposed to permit said carriage and drums to be transported as a unitized assembly, whcih fork lift engageable carriage includes:
a. a flat rectangular rigid base that has an upper surface and a bottom surface, first and second ends, and first and second sides;
b. transverse fork lift engageable means secured to said bottom surface;
c. first and second pairs of transversely spaced uprights that extend upwardly from said base adjacent said first and second ends thereof;
d. a plurality of vertically spaced pairs of first drum-retaining strips that extend longitudinally between said first and second pairs of uprights and rigidly secured thereto with each of said pairs of first drum-retaining strips being so vertically spaced above said base as to be adjacently disposed relative to an intermediate side wall section of one of said drums in one of said stacks;
e. a plurality of vertically spaced second drum-retaining strips that extend transversely between said second pair of uprights secured thereto with each of said second drum-retaining strips being so vertically spaced above said base as to be in contact with intermediate side wall sections of said drums most adjacently disposed relative thereto;
f. a plurality of vertically spaced elongate members that have first and second ends with said first ends being disposed in fixed positions relative to said first upright most adjacent to said first side of said base, said members being so vertically spaced that they contact intermediate wall sections of said drums in said stocks most adjacent said first end of said base when said members are transversely disposed; and
g. a plurality of vertically spaced first means disposed in fixed positions relative to said first upright most adjacent said second side of said base, with each of said first means being capable of removably engaging one of said second ends of said members, with each of said first means when actuated, tensioning the one of said members associated therewith, with each of said members when tensioned pressure contacting said drums in said stacks most adjacent thereto to tend to force said drums towards said second pair of uprights, and said drums as they tend to move towards said second pair of uprights tending to move said drums situated intermediate therebetween towards said second pair of uprights, and with said drums being forced into pressure contact with one of said pairs of first drum-retaining strips and one of said second retaining strip to be gripped therebetween in a fixed position relative to said base to permit said unitized assembly to be transported to a desired destination.

4,061,392
SIDE TILT INTEGRATED CAB
James E. Lowder, and Gary D. Perry, both of Lubbock, Tex., assignors to Eagle-Picher Industries, Inc., Cincinnati, Ohio
Continuation of Ser. No. 542,405, Jan. 20, 1975, abandoned. This application Feb. 14, 1977, Ser. No. 768,629
Int. Cl.² B62D *27/00*
U.S. Cl. 296—28 C **1 Claim**

1. In combination with a vehicle having a main frame which includes two spaced-apart longitudinally extending main frame members, an operator cab frame constructed of posts and cross members connected together to form a rigid cage having an interior space, an operator seat inside said cage and rigidly connected to said cab frame, and mounting means interconnected to said cab frame and to said vehicle frame for normally holding said cab frame in a fixed position and for preferentially absorbing energy by plastic deformation when lateral forces are applied to said cab frame in a direction tending to swing said cab frame relative to said main frame in the event of roll-over of the vehicle, whereby said cab frame remains intact and plastically undeformed during roll-over, said mounting means including two transverse beams both secured to at least

one of said main frame members and extending laterally thereof so as to support said cab frame from below in a position outboard of said main frame, and connecting means connecting said cab frame to said beams at locations near the outer ends of said beams and a plastically deformable compression post extending downwardly from said cab frame and pivotally

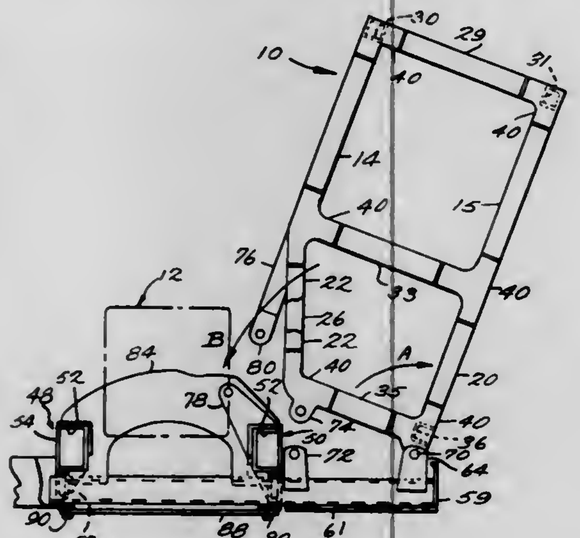

connecting with said main frame at a location which is spaced rearwardly from both of said beams, said main frame including at said location a transverse frame member rigidly connected to both of said main frame members, said post and said transverse beams being preferentially plastically deformable relative to said posts and cross members which form said cab frame.

4,061,393
SHOCK MOUNTED TILTING OPERATOR PLATFORM
Gary D. Blomstrom, Waverly, Nebr., assignor to Caterpillar Tractor Co., Peoria, Ill.
Filed Dec. 15, 1975, Ser. No. 640,514
Int. Cl.² B62D *27/04*
U.S. Cl. 296—28 C **1 Claim**

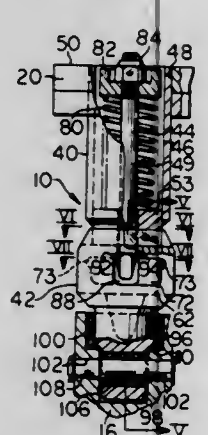

1. An assembly for mounting an operator's cab to the frame of a vehicle, comprising:
a first connector having a rigid load bearing surface at a free end thereof;
a second connector having a rigid load bearing surface for mating supportive load bearing engagement with the bearing surface of the first connector;
means for releasably locking together the first and second connectors when in supportive load bearing engagement with one another;
means for securing the first connector to one of the cab and the frame, and
means spaced from the rigid load bearing surfaces and the locking means for resiliently mounting the second connector to the other of the cab and the frame, said resilient mounting means isolating the cab from frame vibrations;
said second connector having an elogate body with the load bearing surface at one of a pair of opposite end portions thereof, and
said resilient mounting means including
a resilient bushing within a bore extending through the body adjacent the other end portion thereof, and
a pin supported by the frame and extending through the bushing, said frame having a recess therein for receipt of the other end portion of the body and said pin extending across the recess between opposite sides thereof;
said frame having a hole overlying and communicating with the recess defining a shoulder therebetween,
said body having a section above the other end portion defining a shoulder therebetween and received within the hole when the other end portion is within the recess, and
said resilient mounting means including a bushing within the hole surrounding said section and resiliently isolating it from frame vibrations in a plane parallel to the pin, said pin supporting the shoulders in spaced relation.

4,061,394
TONNEAU COVER FOR RECREATIONAL VEHICLE
George M. Vodin, 2280 Hassell Road, Hoffman Estates, Ill. 60195
Filed Jan. 12, 1976, Ser. No. 648,488
Int. Cl.² B60P *7/04*
U.S. Cl. 296—100 **10 Claims**

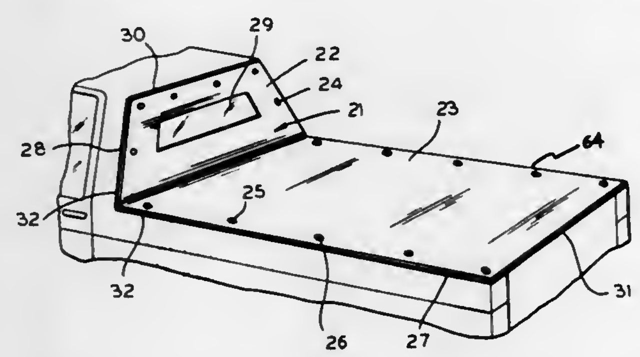

1. A tonneau cover for recreational vehicles comprising:
load bed cover means of substantially pliable weather-resistant material for enclosing an open load bed having a peripheral frame;
cab closure means of substantially pliable weather-resistant material which emanates from a first end of said load bed cover means, for closing off the rear opening of a vehicle cab compartment;
vehicle attachment means for affixing said load bed cover means over the top of said load bed of said vehicle and for affixing said cab closure means over said rear opening of said vehicle cab compartment respectively;
said load bed cover means and said cab closure means meeting at the intersection of said load bed and cab so as to form a substantial angle thereat;
said load bed cover means juxtaposed to and covering the open portion of said load bed in a substantially horizontal position and attached to the frame of said load bed by said vehicle attachment means;
said cab closure means juxtaposed to and covering the open portion of the rear of said cab compartment in a substantially vertical position and attached to the frame of said rear cab compartment by said vehicle attachment means;
said vehicle attachment means capable of affixing said tonneau cover in degrees ranging from total enclosure of said load bed and cab compartment to only partial attachment over said load bed and cab compartment enclosing only a desired portion of said bed and cab compartment respectively.

4,061,395
PORTABLE DRAWER ASSEMBLY
Leon J. Boole, P.O. Box 31, Newtonville, Mass. 02160
Filed Oct. 13, 1976, Ser. No. 732,283
Int. Cl.² A47C *7/62*
U.S. Cl. 297—192 **3 Claims**

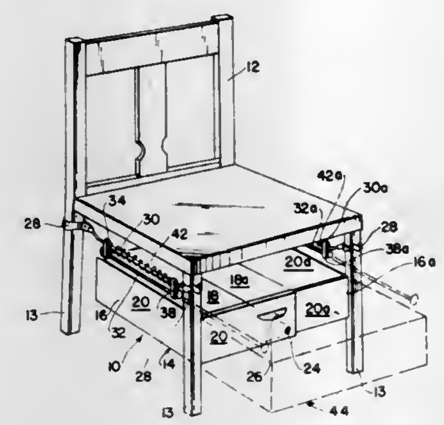

1. A portable drawer assembly for use with a four legged piece of furniture having a space between the legs, such as a chair or the like, said assembly comprising:
a. an enclosure having an open top and means for selectively adjusting the width thereof to effect the positioning thereof in the space between the four legs, said enclosure including first and second unitary sections each having a rectangular base and three side walls perpendicular thereto, said adjusting means including an integral slot in the base and two side walls of said first section along the open side thereof, the base and two side walls of said second section at the open side thereof being configured to be entirely slidably received in said integral slot; and
b. means for moveably mounting the enclosure in suspension from the four legs for sliding movement of the enclosure into and out of said space between the four legs, a set screw in one of said two side walls of said first section for engaging the corresponding side wall of said second section to maintain the two sections in a selected position corresponding to a desired width, said mounting means comprising four clamping members for connecting to the four legs, two first elongated rods each connected between two clamping members along the length of the enclosure, two second elongated rods connected at two sides of the top of the enclosure along the length thereof and two sets of first and second connecting members, each set disposed at one side of the enclosure and suspending the same therefrom and wherein the first connecting member of each set is fixedly connected to one first rod and slidably connected to one second rod at the front of the enclosure and the second connecting member of each set is fixedly connected to one second rod and slidably connected to one first rod at the rear of the enclosure.

4,061,396
TIE DOWN FOR ROTATING SEAT CUSHIONS
William D. Reida, Green Mountain Falls, Colo., assignor to AMI Industries, Inc., Colorado Springs, Colo.
Filed Feb. 24, 1976, Ser. No. 660,845
Int. Cl.² A47C *27/00*
U.S. Cl. 297—283 **2 Claims**

1. A seat comprising multiple seat and back frames, upholstered seat and back cushions arranged on said frames, said seat cushions having upper and lower seating surfaces, tie-down tabs swivelly attached at their upper ends to the sides of said seat cushions substantially centermost thereof and depending below one of said seating surfaces, apertures in the depending ends of said tabs, hook means fixedly anchored in said seat frame adjacent the outer sides of said seat cushions and projecting upwardly and angularly therefrom, ear means on the free ends of said hook means, said ears being interengaged with said tab apertures, and generally U-shaped hook means with upwardly and angularly projecting arms extending at an angle of approximately 45 degrees and anchored to said frame between the adjoining sides of said seat cushions, and ears formed on the upper free ends of said arms for interengagement with said adjoining cushion tabs, and the ear means on the free ends of

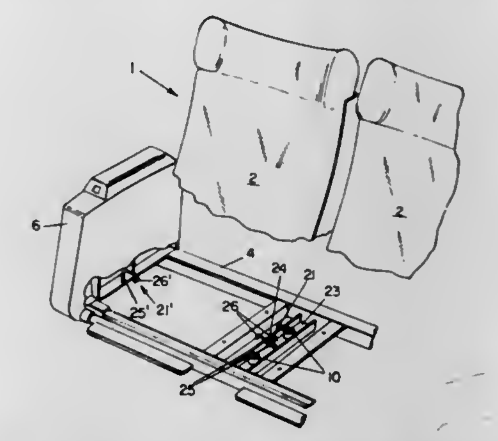

said hook means so interengages with said apertures in the tabs on adjoining sides of said cushions whereby both cushions are attached thereto and downward pressure exerted thereon to properly seat said cushions in said frames and prevent forward sliding movement thereof.

4,061,397
DRIVE MECHANISM FOR RECLINING CHAIRS
Michael Roland Lewis, 72 Pole Hill Road, Uxbridge, Middlesex, England
Filed Mar. 8, 1976, Ser. No. 665,145
Claims priority, application United Kingdom, Mar. 11, 1975, 9998/75
Int. Cl.² A47C *1/02*
U.S. Cl. 297—330 **8 Claims**

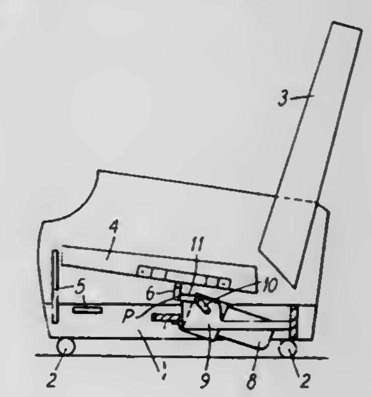

1. A drive mechanism for a reclining chair or the like comprising:
an electric motor mounted on a chair frame;
manually operable switch means for selectively supplying electric power to said motor;
a shaft driven by said motor;
a crank lever attached to said shaft;
a bracket;
flexible means for attaching said bracket to a seat of the chair;
said flexible means comprising an elongate member extending transversely across the underside of the seat;
said elongate member having its ends attached to the seat;
a portion of said bracket being fixedly attached to a central part of said elongate member;
a link member having one end pivotally connected to said crank lever such that the locus of movement of the pivot point is circular and having its other end pivotally connected to another portion of said bracket;
said bracket and said elongate member being movable in both a horizontal and a vertical direction, whereby said seat is movable over a substantially horizontal first arc and a substantially vertical second arc.

4,061,398
HYDRAULIC MINING APPARATUS AND METHOD
David M. Parkes, Calgary, Canada, assignor to Kaiser Resources Ltd., Canada
Filed July 2, 1976, Ser. No. 702,072
Claims priority, application Canada, Apr. 6, 1976, 246968
Int. Cl.² E21C *35/22*
U.S. Cl. 299—17 **8 Claims**

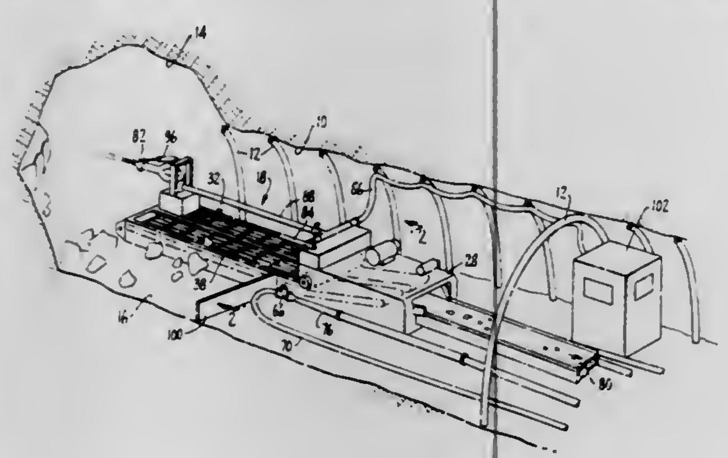

7. A method of treating and conveying hydraulically mined aggregate, said method comprising: conveying said aggregate over an elongate perforate continuous loop belt conveyor having upstream and downstream sections and a reach extending over the length of said sections, the belt of said conveyor being sufficiently open to permit the substantially unrestricted passage of mined aggregate therethrough and having an upstream support extending beneath said reach over the length of said upstream section and a downstream support extending beneath said reach over the length of said downstream section, said upstream support having openings therein sized to permit fluid and aggregate of a pumpable size to pass therethrough while preventing the passage therethrough of aggregate greater than pumpable size, said downstream support being substantially imperforate whereby aggregate carried by said downstream section is supported on said downstream support and discharges over the distal end of said section; subjecting aggregate of greater than a predetermined size to breakage at a point disposed intermediate said upstream and downstream sections to reduce the size of said aggregate; collecting fluid and aggregate which passes through the upstream support and conveying the same away by pumping; conveying over the downstream section of the conveyor the aggregate remaining on the conveyor after breakage intermediate said upstream and downstream sections; and, discharging aggregate conveyed on said downstream section over the distal end thereof onto a conveyor disposed in receiving relationship to said downstream section.

4,061,399
MINING BY INSERTION OF CUTTING MODULES INTO SHAFT FOR CONNECTION AND ACTUATION
Rodney L. Nelson, Falls Creek, Pa., assignor to Ray M. Baughman, DuBois, Pa., a part interest
Filed Mar. 5, 1976, Ser. No. 664,191
Int. Cl.² E21C *41/00*
U.S. Cl. 299—18 **12 Claims**

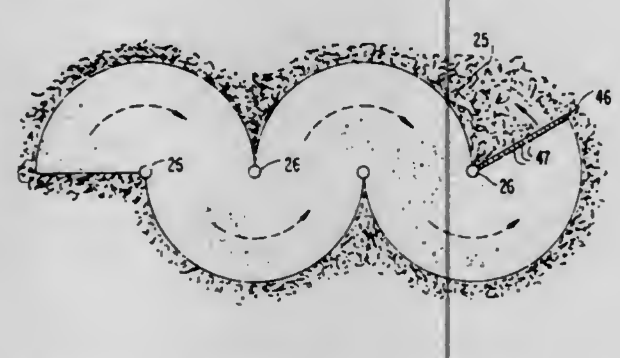

1. A method of mining coal, minerals and other minable materials beneath the surface of the earth comprising forming a shaft from ground level downwardly to intersect a subterranean seam, assembling a string of interconnected mining modules in the seam by cutting substantially radially into said seam and away from said shaft by a lead module and removing cuttings from said seam and delivering them through said shaft to ground level, and further cutting into said seam on a second path by said string of interconnected mining modules along one side of the radial cut and removing cuttings from said seam and delivering them through said shaft to ground level.

4,061,400
SPOKE WHEEL ANTI-THEFT CLIP
Robert A. D'Angelo, Ontario, Calif., assignor to Keystone Products, Inc., Ontario, Calif.
Filed July 12, 1976, Ser. No. 704,153
Int. Cl.² B60B *7/00*
U.S. Cl. 301—37 AT **3 Claims**

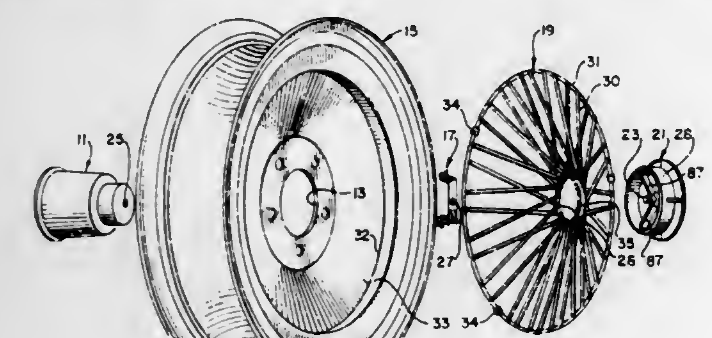

1. Apparatus for preventing theft of a spoke assembly from a wheel, comprising:
a spoke assembly including plural radiating spokes and means preventing relative rotation between said spoke assembly and said wheel;
a locking member attached to said spoke assembly to prevent rotation of said locking member relative said spoke assembly;
said locking member being unitarily formed of resilient metal and comprising a base, a resilient finger extending from said base, said finger being an integral part of said locking member, and an extending section of said finger ending in a stub which may be depressed to lower said finger towards its base; and
a threaded fastener clamping said spoke assembly to said wheel, said threaded fastener including a projection selectively engaging said finger when said finger is in its relaxed position, said projection spaced sufficiently from said locking member to not engage said finger when said finger is resiliently bent toward said base.

4,061,401
PNEUMATICALLY OPERATED CONVEYOR SYSTEMS FOR PULVERULENT OR PARTICULATE MATERIALS
Roy William Brown, 29 Fairwater Road, Llandaff, Cardiff, Glamorganshire, Wales
Filed Dec. 23, 1975, Ser. No. 643,907
Claims priority, application United Kingdom, Jan. 8, 1975, 744/75
Int. Cl.² B65G *53/66*
U.S. Cl. 302—41 **9 Claims**

1. A high frequency pneumatic conveying system for pulverulent or particulate material comprising a despatch vessel, a conveying pipe line being connected to said despatch vessel for connecting said despatch vessel with a receiving vessel, a piston and cylinder operated fill valve being mounted in said despatch vessel for admitting material to be conveyed into said despatch vessel, and control means for alternately operating said fill valve and applying pressure air to said despatch vessel for intermittently discharging material in the despatch vessel into said pipe line, said despatch vessel having a non-return outlet valve, air vents in said despatch vessel in the form of permeable low resistance membranes which in one mode of operation permit rapid filling of said despatch vessel by rapid venting of air therefrom and in another mode of operation act

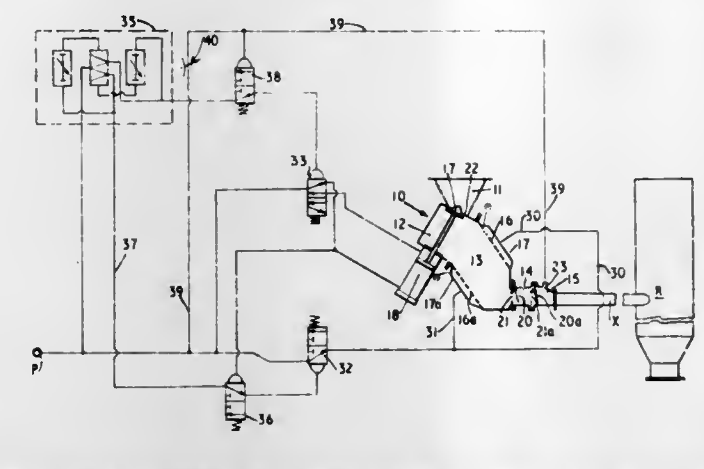

as fluidizers for material in the despatch vessel, a control means for ensuring a firm closure of said fill valve before conveying air is admitted to said despatch vessel, and means to regulate said despatch of material in accordance with the air pressure in said conveying pipe line.

4,061,402
WHEEL LOCK CONTROL SYSTEM FAILURE AND DISABLING CIRCUIT
Philip R. Peterson, Grand Blanc; David W. Taylor, Davison, and Wayne A. Levijoki, Clio, all of Mich., assignors to General Motors Corporation, Detroit, Mich.
Filed Sept. 29, 1976, Ser. No. 727,943
Int. Cl.² B60T *8/02*
U.S. Cl. 303—92 **3 Claims**

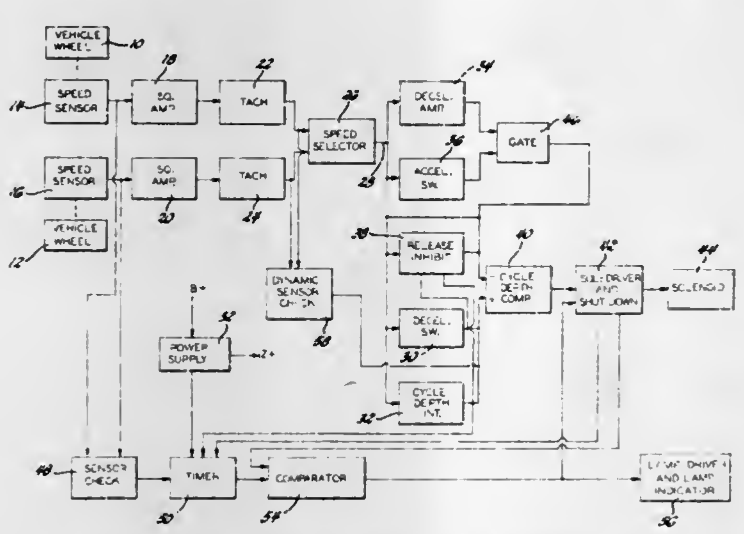

1. A wheel lock control system for a vehicle having rotatable wheels and a braking system for applying braking forces to the wheels and including a system failure monitoring and disabling circuit, the system comprising:
speed sensing means effective to provide a wheel speed signal representing wheel rotational speed;
control circuit means responsive to the wheel speed signal effective to provide a brake release signal when the wheel speed signal characteristics represent an incipient wheel lock condition;
brake control means responsive to the brake release signal effective to release the braking forces on the wheels for the duration of the brake release signal; and
a monitoring circuit, the monitoring circuit including
means effective to generate a fault signal in response to a sensed system malfunction,
logic means responsive to the fault signal and the brake release signal effective to provide an inhibit signal which is initiated solely by the fault signal and terminated only when both the fault and brake release signals are terminated so that the inhibit signal exists only for the duration of a temporary fault occurring during time periods other than during a brake release signal and exists for the duration of the longer one of the fault signal or a brake release signal if the fault signal coexists at least momentarily with the brake release signal, and
means reponsive to the inhibit signal effective to inhibit the brake control means response to the brake release signal, whereby the brake control means is prevented from releasing the vehicle brakes for the duration of a temporary fault condition occuring during periods other than a brake release signal and for the duration of the longer one of the fault signal or the brake release signal if the fault signal coexists at least momentarily with the brake release signal.

4,061,403
WHEEL LOCK CONTROL SYSTEM
Philip R. Peterson, Grand Blanc, and David W. Taylor, Davison, both of Mich., assignors to General Motors Corporation, Detroit, Mich.
Filed Sept. 29, 1976, Ser. No. 727,942
Int. Cl.² B60T *8/02*
U.S. Cl. 303—106 **4 Claims**

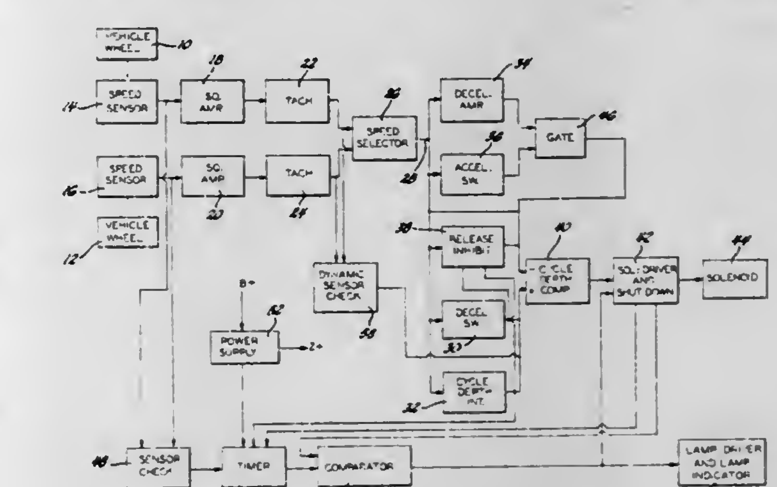

1. A wheel lock control system for a vehicle with braked wheels comprising:
means effective to provide a speed signal representing wheel speed;
a deceleration switch responsive to the speed signal effective to provide a control signal which is initiated when the rate of change of wheel speed exceeds a predetermined threshold deceleration indicative of incipient wheel lock;
a cycle depth integrator effective to generate a cycle depth signal; and
control means responsive to the control signal and the cycle depth signal for effecting brake release during the period of the control signal and during the time period the cycle depth signal exceeds a reference value,
the cycle depth integrator including; means responsive to the speed signal effective to provide an acceleration signal representing wheel acceleration,
means effective during brake application to provide a deceleration reference signal representing a maximum vehicle deceleration, the deceleration reference signal being terminated during brake release,
integrating means effective to integrate the sum of the acceleration signal and the deceleration reference signal to provide the cycle depth signal, the cycle depth signal being a composite signal comprises of a first porion representing the amount that the time integral of the deceleration reference signal exceeds the wheel speed during brake application and a second portion which is the integral of wheel acceleration during brake release, and
means responsive to brake reapplication effective to set the cycle depth signal output of the integrating means to a value equal to the value the cycle depth signal would have obtained if the deceleration reference signal were continually summed with the acceleration signal, the cycle depth signal having a magnitude that increases to a value greater

than the reference value after repeated brake release and application cycles when the average wheel deceleration exceeds the maximum possible vehicle deceleration representing the wheel approaching a locked condition to maintain the wheel brake released to allow the wheel to accelerate toward vehicle speed to thereby prevent wheel lock.

4,061,404
BRAKE PRESSURE CONTROL VALVE
Charles Hunter Lantz, Troy, Ohio, assignor to The B. F. Goodrich Company, Akron, Ohio
Filed Dec. 6, 1976, Ser. No. 747,680
Int. Cl.² B60T *8/06*
U.S. Cl. 303—118 **4 Claims**

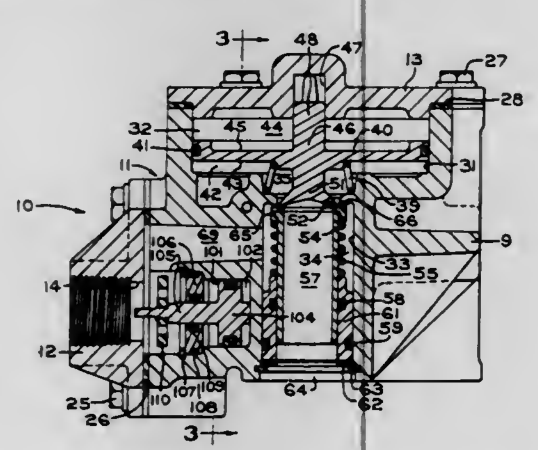

1. In an anti-skid system for use in controlling the braking pressure applied to a braking means of a wheel, said system including means for detecting a skid situation or an impending skid situation at said wheel and producing an electrical signal in response thereto and a control valve for regulating the amount of said braking pressure applied to said wheel, wherein said control valve comprises:

a valve housng having a balancing piston chamber, a baffle piston chamber, an inlet opening for braking fluid, said braking fluid inlet opening adjacent said baffle piston chamber, and an inlet opening for modulating fluid;

a balancing piston movable within said balancing piston chamber and having two opposing surfaces, each of said surfaces adaped to be exposed to a pressurized fluid which biases said balancing piston, and a baffle piston movable within said baffle piston chamber and adapted to be exposed to a pressurized fluid within said baffle piston chamber which biases said baffle piston;

a braking fluid chamber having a boundary which comprises one of said opposing surfaces of said balancing piston, a braking fluid passageway from said braking fluid inlet opening to said braking fluid chamber, and a braking fluid communication means between said braking fluid chamber and said braking means;

a modulating fluid chamber having a boundary which comprises the other of said opposing surfaces of said balancing piston, a first modulating fluid passageway between said modulating fluid chamber and said modulating fluid inlet opening, and a second modulating fluid passageway between said first modulating fluid passageway and said baffle piston chamber;

a solenoid valve assembly operative in response to said electrical signal to divert said modulating fluid from said first modulating fluid passageway through said second modulating fluid passageway to said baffle piston chamber, and

a baffle movable in response to said movement of said baffle piston, said baffle adapted to partially block said braking fluid inlet opening thereby partially restricting the flow of said braking fluid through said braking fluid passageway.

4,061,405
APPARATUS FOR HANDLING CONNECTORS
Jerry B. Minter, Normandy Heights Road, Morristown, N.J. 07960
Division of Ser. No. 504,233, Sept. 9, 1974, Pat. No. 3,940,849. This application Jan. 5, 1976, Ser. No. 646,473
Int. Cl.² H05K *1/07, 3/34*
U.S. Cl. 339—17 M **10 Claims**

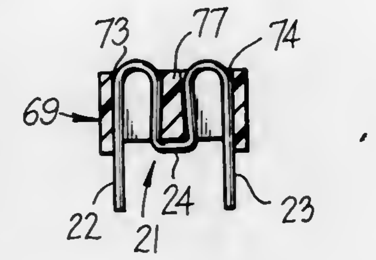

1. An article of manufacture comprising a plurality of resilient wire connector members, each formed of an integral piece of wire bent to comprise a pair of legs extending generally parallel to each other and an integral, reverse-bent part joining said legs together at one end thereof, the other end of each of said legs being free; and

a holder for a plurality of said wire members and comprising: a body portion comprising a pair of substantially parallel side walls having surfaces facing toward each other, each of said walls having parallel grooves in the facing surface thereof aligned with corresponding ones of said grooves in the facing surface of the other of said walls to comprise an aligned pair of grooves, said walls being spaced apart by a distance slightly less than the normal distance across said pair of legs to the outermost part of the surfaces of said legs, each of said wire members being firmly but releasably held by the inner surfaces of one of said aligned pairs of grooves pressing in opposite directions on said legs of the respective wire member, said holder further comprising means between said side walls and parallel thereto to engage the reverse-bent part of said wire members and provide alignment of the relative positions of all of said wire members in the direction perpendicular to the longitudinal direction of said grooves.

4,061,406
HIGH CURRENT CARRYING CONNECTOR
John Philip Kunkle, Harrisburg, Pa., assignor to AMP Incorporated, Harrisburg, Pa.
Filed Aug. 28, 1974, Ser. No. 501,374
Int. Cl.² H01R *13/28*
U.S. Cl. 339—47 C **3 Claims**

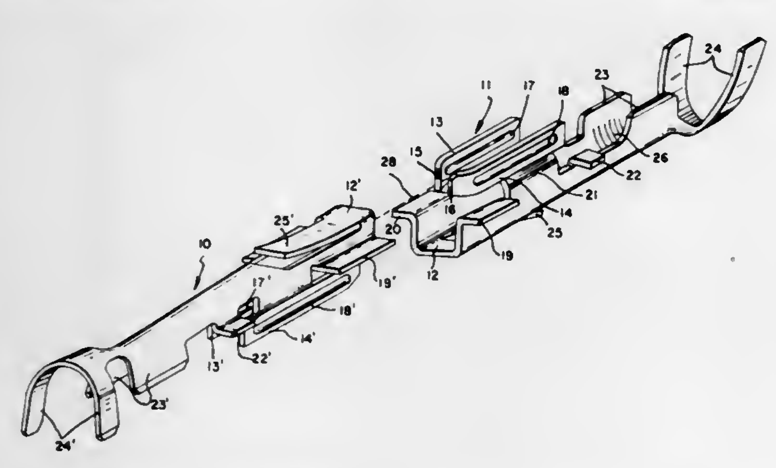

1. A connector comprising:

a first housing portion comprising a first common base and a first network of partitions supported on said common base which define a plurality of first cavities thereon with each first cavity having at least one adjacent cavity;

those partitions defining each first cavity being separated

from those partitions defining adjacent cavities by a spacing therebetween;

a second housing portion matable with said first housing portion and comprising a second common base and a newtork of second partitions which are supported on said second common base and which define a plurality of second cavities with each cavity having at least one adjacent cavity;

the said network of second partitions forming a grid-like pattern which fits into the spacings between the partitions forming each of said first cavities to mate each of said first cavities with an individual one of said second cavities;

a hermaphroditic contact retained in each of said cavities of said first and second housing portions;

said first and second housing portions constructed to retain one of said hermaphroditic contacts in each matable pair of cavities in a position to become mated with each other when said first and second housing portions are mated;

each of said matable contacts comprising:

a trough-like element at one end of said contact;

a pair of elongated, leaf-like elements mounted upon said trough-like element;

and means for retaining a conductor of another end of said contact;

said pair of elongated, leaf-like elements of each contact of each pair of matable contacts being constructed to fit within the trough-like element of the other contact of said matable pair of contacts to provide four separate areas of electrical contact between the four leaf-like elements and the two trough-like elements of a mating pair of said matable contacts;

each of said matable contacts further comprises an embossed area on each of said elongated leaf-like elements;

said embossed areas being positioned on said leaf-like elements to make contact with the inner surface of the trough-like element of the contact which mates therewith to enable cooling air to flow between said inner surfaces and said trough-like element and the mating leaf-like elements adjacent thereto.

4,061,407
ELECTRICAL CONNECTOR ASSEMBLY
John P. Snow, Sagamore Hills, Ohio, assignor to Samuel Moore and Company, Aurora, Ohio
Filed Mar. 18, 1976, Ser. No. 668,263
Int. Cl.² H01R *13/54*
U.S. Cl. 339—75 P **7 Claims**

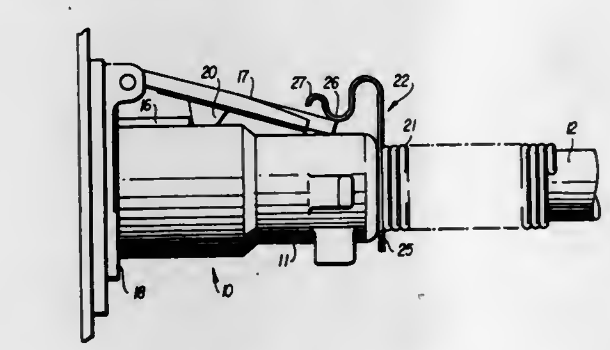

1. An electrical connector assembly comprising a receptacle having an open end, a plug and cable assembly, said plug being inserted in the receptacle and making electrical contact therewith, an exposed protuberant member on the plug, a cover hinged to the receptacle and biased towards said open end, a latch depending from the cover and disposed against the exposed end of said protuberant member, and a one-piece spring clip member having a body portion secured to the said assembly and having an integral U-shaped resilient portion biasing the cover against the plug.

4,061,408
CONNECTOR FOR A PLATE ELECTRODE
Kenneth D. Bast, St. Paul, and Jerauld M. Kennelly, Mahtomedi, both of Minn., assignors to Minnesota Mining and Manufacturing Company, St. Paul, Minn.
Filed Sept. 7, 1976, Ser. No. 720,743
Int. Cl.² H01R *13/62*
U.S. Cl. 339—75 R **10 Claims**

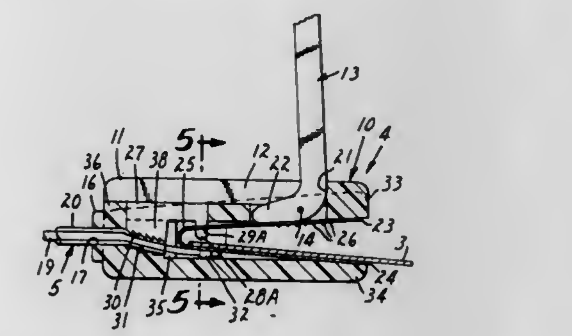

1. A connector for a plate electrode comprising in combination a resilient body comprising an upper member and a lower member spaced from each other at one end thereof and rigidly attached to each other at the opposite end thereof; flexible, resilient first electrically conductive sheet means adjacent said upper member, means holding said first electrically conductive sheet means between said upper and lower members and adjacent said upper member, at least a portion of the surface of said first electrically conductive sheet means nonadjacent to said upper member containing means for resisting movement of said plate electrode from between said first electrically conductive sheet means and said lower member, a pivoting lever means attached to said upper member and having one end thereof adjacent said first electrically conductive sheet means, said lever means adapted to move from a first open position whereby said first electrically conductive sheet means is adjacent said upper member to a second closed position where said first electrically conductive sheet means is deflected to be adjacent said lower member with said plate electrode held between said first electrically conductive sheet means and said lower member and said plate electrode contacting the surface of said first electrically conductive sheet means containing means for resisting movement of said plate electrode from between said first electrically conductive sheet means and said lower member, and second electrically conductive means attached to said first electrically conductive sheet means for electrically connecting said first electrically conductive sheet means to an electrical power source.

4,061,409
RELEASABLE LOCKING MEANS FOR TWO PART ELECTRIC CONNECTOR
Herbert Shipley Bealmear, Ridge Road, Box 8C, Hanover, Md. 21076
Filed Nov. 10, 1976, Ser. No. 740,560
Int. Cl.² H01R *13/54*
U.S. Cl. 339—75 P **1 Claim**

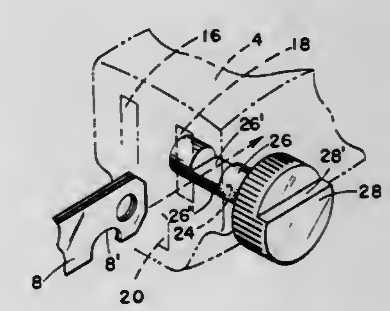

1. An electric connector of two separate body members with matching end faces, one of said members having a plurality of electric carrying elements extending outwardly from the

matching face thereof, and the other body member having a plurality of recesses extending inwardly from the matching face of the second body member for receiving the extensions of the first body member, a cut-away portion formed in at least one of the extended elements for engaging a locking means carried by the second body member, the locking means comprising a rotatable locking pin mounted in an aperture in the second body member, said pin having a cut-away portion within at least one side thereof to allow the extended element carried by the lock engaging pin to pass through the cut-away portion of the pin when in one position and to engage the pin when the pin is rotated to another position.

4,061,410
CIRCUIT BOARD TERMINAL IDENTIFICATION DEVICE
Peter Steve Kubik, South Plainfield, N.J., assignor to Bell Telephone Laboratories, Incorporated, Murray Hill, N.J.
Filed Mar. 18, 1977, Ser. No. 779,160
Int. Cl.² H01R *3/00*
U.S. Cl. 339—113 B 7 Claims

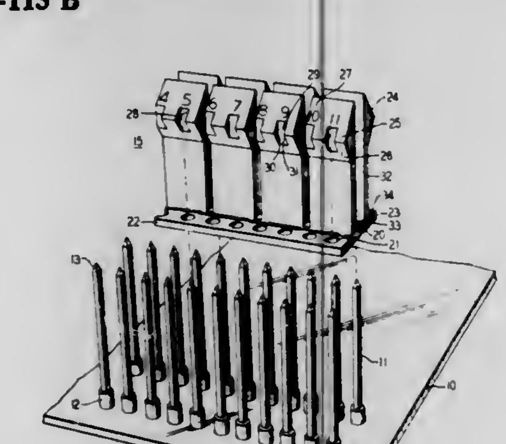

1. Apparatus for facilitating identification of parallel rows of interconnection pins on a circuit board including
a base portion,
means, integral with said base portion, for securing said apparatus to said parallel rows of interconnection pins,
identifier means, and
means for flexibly mounting said identifier means to said base portion.

4,061,411
MULTI-OUTLET ADAPTOR FOR PLUG-IN TELEPHONES
Beverley William Gumb; Gerd Kuhfus, and Fredrick Thomas Cogan, all of London, Canada, assignors to Northern Telecom Limited, Montreal, Canada
Filed Jan. 21, 1977, Ser. No. 761,066
Int. Cl.² H01R *27/02*
U.S. Cl. 339—159 R 4 Claims

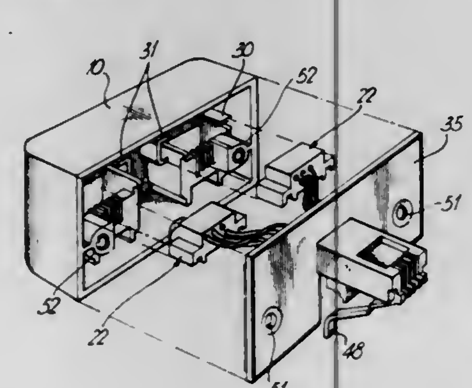

1. A multi-outlet adaptor for plug-in telephones, comprising:
a main part of hollow box-like form having a front, top and bottom, and ends;
at least two apertures in said front, said apertures each having a predetermined profile for reception of a plug therein;
a jack aligned with each aperture, said jacks on the inside of said front and each comprising a lower part integral with said front and an upper part positioned on said lower part, each lower part comprising two spaced apart side walls extending normal to said front and a bridge member at the rear of said side walls and extending between said side walls and integral therewith, and each upper part including two spaced apart parallel channels in an undersurface thereof, said channels slidable on said side walls of said lower part;
a retaining member on each end of the inside thereof and two further retaining members extending from the inside of said front, said retaining members extending over said side walls of said lower parts to retain said top parts of said jacks on said lower parts;
a back cover attached to said main part at the back thereof and a plug extending from said cover, in a direction away from said main part, said plug integral with said back cover; and
conductors in said plug and said jacks, the conductors in said jacks connected in parallel to said conductors in said plug.

4,061,412
TERMINAL FOR A RESISTANCE HEATING ELEMENT
Charles A. Skinner, Laurel, Md., assignor to Electro-Therm, Inc., Laurel, Md.
Filed Dec. 15, 1975, Ser. No. 636,475
Int. Cl.² H01R *11/26*
U.S. Cl. 339—263 R 5 Claims

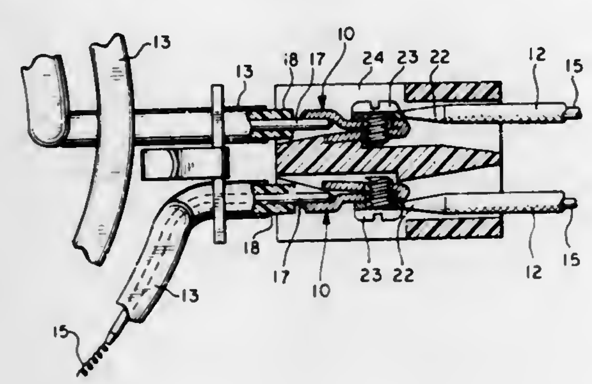

1. A universal blade-type terminal for use in conjunction with a sheathed heating element having a central conductor, said terminal comprising: a generally flat, elongate body portion for being fastened to the central conductor of the sheathed heating element at one end thereof and having a first aperture formed therein and sized to receive a first threaded fastener of one diameter; and a generally flat tab portion connected to the other end of said body portion by an arcuate neck portion of reduced width such that said tab portion extends under said body portion, said tab portion having a second aperture formed therein which is axially aligned with said first aperture and sized to receive a second threaded fastener having a different diameter than said first fastener, whereby said terminal is adaptable to receive one of at least two fasteners of different diameters.

4,061,413
GASKET FOR THE HIGH-FREQUENCY-TIGHT CONNECTION OF DETACHABLE METALLIC SHIELDING ELEMENTS
Roman Keller, Erlangen, Germany, assignor to Siemens Aktiengesellschaft, Berlin and Munich, Germany
Filed Oct. 2, 1975, Ser. No. 619,028
Claims priority, application Germany, Oct. 10, 1974, 2448421
Int. Cl.² H01R *11/20*
U.S. Cl. 339—95 R 13 Claims

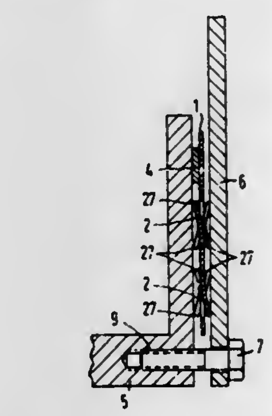

1. A gasket for use in realizing a high-frequency-tight connection between first and second detachable metallic shielding elements, said gasket having first and second exterior surfaces adapted to face said first and second elements, respectively, when said gasket is placed in the gap between said elements, said gasket comprising:
a strip of metallic material;
a multiplicity of triangular spring tabs arranged in at least one row approximately parallel to the long sides of said strip and projecting outwardly from said exterior surfaces, said tabs being disposed in said row individually in side by side relationship and such that the projections of adjacent tabs onto the plane of said strip are rotated by 180° relative to one another.

4,061,414
KALEIDOSCOPIC APPARATUS
Bruce D. Price, 924 W. End Ave., New York, N.Y. 10025
Filed Oct. 16, 1975, Ser. No. 623,024
Int. Cl.² G02B *27/08*
U.S. Cl. 350—4 10 Claims

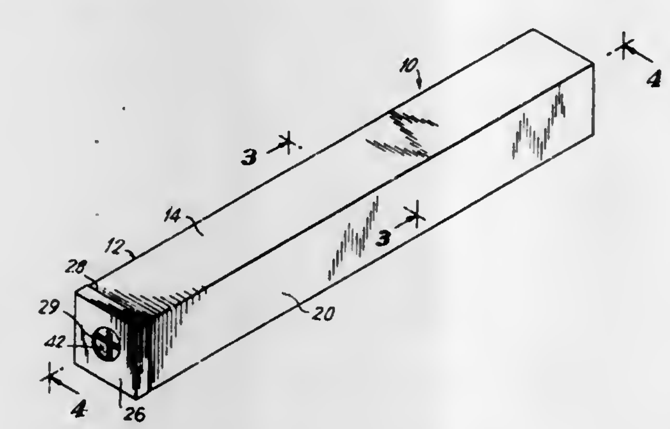

1. A kaleidoscopic apparatus comprising
an elongated substantially tubular housing,
a plurality of planar members having reflective surfaces disposed internally within and extending longitudinally of said tubular housing and substantially dividing the entire cross-sectional interior thereof into predetermined geometric cross-sectional areas, and
said housing including front and rear wall members having first and second viewing apertures, respectively, formed therein.

4,061,415
NUTATING RADIATION DEFLECTING METHOD AND APPARATUS
Jon C. Taenzer, Palo Alto, Calif., assignor to Sanford Research Institute, Menlo Park, Calif.
Filed July 2, 1976, Ser. No. 702,273
Int. Cl.² G02B *27/17;* G01V *1/16;* H04B *13/02;* G10K *11/00*
U.S. Cl. 350—6 31 Claims

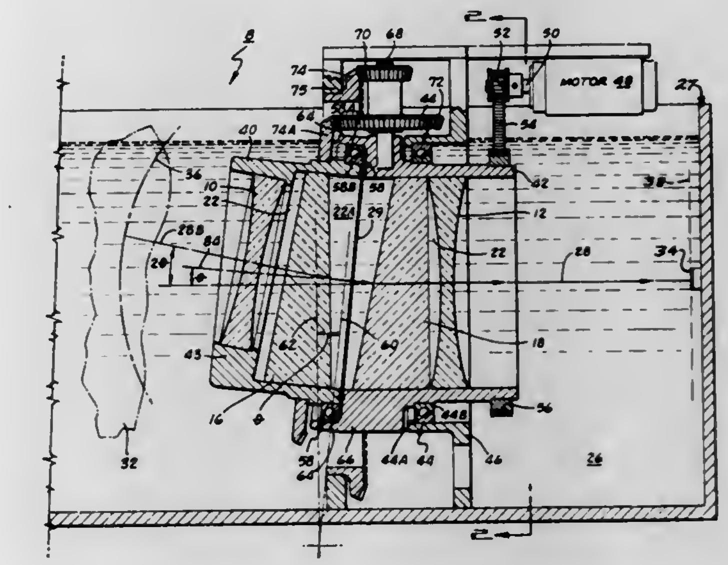

1. A deflection system for deflecting radiation subject to refraction, such as light or sound, comprising,
first and second radiation refracting wedges in the path of incident radiation through which wedges the radiation is passed,
means for mounting the second wedge for rotation about a fixed axis of rotation,
means for mounting the first wedge for rotation about a movable axis which nutates about said fixed axis during rotation of said second wedge, and
means for counterrotating said wedges at equal angular displacements for control of the deflection of said radiation passing therethrough.

4,061,416
OPTICAL FIBRE CONNECTOR
William James Stewart, Towcester, England, assignor to Plessey Handel und Investments A.G., Zug, Switzerland
Filed Nov. 6, 1975, Ser. No. 629,570
Claims priority, application United Kingdom, Nov. 8, 1974, 48339/74
Int. Cl.² G02B *5/16*
U.S. Cl. 350—96 C 4 Claims

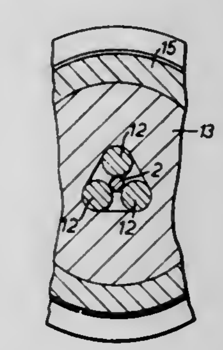

1. An optical fibre butt connector capable of establishing a disconnectable butt connection between two optical fibres of equal diameter comprising for each fibre:
i. an elastic bush means for supporting the fibre near an end of the fibre;
ii. a carrier disc means for carrying the bush means comprising a carrier disc connected to said bush means and having a flange extending parallel to the fibre towards the said end of the fibre and substantially perpendicular to the plane defined by the carrier disc, the flange terminating in a pressure face which is parallel to the plane of the carrier disc;

iii. and a cap having a bore means for receiving the fibre and through which the fibre gains access to the bush means, the cap including a seating means for receiving the carrier disc means and having an internally threaded flange extending towards the said end of the fibre, said butt connector further comprising an alignment unit, common to both fibres, comprising,
iv. three alignment rods each having a diameter greater than the diameter of the fibres;
v. a sleeve of distortable elastic material enclosing the rods;
vi. and a rigid tube enclosing the sleeve, the tube being externally threaded at each end to permit engagement with said flange of said cap;
vii. means for inserting each fibre end between the alignment rods at opposite extremities of the rods for constraining the rods in said sleeve in a mutually parallel relationship and for placing the fibre-ends in alignment with each other; and
viii. means for clamping the fibre-ends comprising means for screwing the caps onto the ends of said tube, and for aligning the sleeve with the pressure faces of the carrier flanges, wherein the screwing of the caps onto the ends of the tube subjects the sleeve to pressure from the aligned pressure faces of the carrier flange and wherein the sleeve distorts under this pressure to exert on the alignment rods a clamping force which clamps the fibre ends in alignment with each other.

4,061,417
COLOR FILTER
Yoshio Katagiri, Tokyo, Japan, assignor to Kabushiki Kaisha Daini Seikosha, Japan
Filed Nov. 6, 1975, Ser. No. 629,673
Claims priority, application Japan, Nov. 14, 1974, 49-131409
Int. Cl.^{2} G02B *5/30;* **G02F** *1/23*
U.S. Cl. 350—159 **6 Claims**

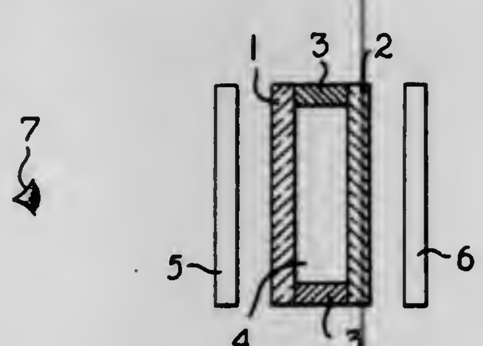

1. A color controllable filter device comprising a pair of parallel disposed transparent plates and spacer means defining a liquid crystal cell; a mixture of nematic and cholesteric liquid crystal compounds contained in said cell, said cholesteric compounds being present in an amount of from one to twenty weight percent of said mixture, said nematic liquid compounds forming the balance, said crystal mixture in said cell being free from specifically applied stress; a pair of variable-angle polarizers disposed on opposite sides of said liquid crystal cell, the wavelengths of transmissivity and reflectance of light through said device being variably controlled, based upon the polarizing angle between said variable-angle polarizer pair.

4,061,418
LIQUID-CRYSTAL DISPLAY WITH POLARIZER, AND METHOD OF MAKING THE SAME
Rudolf Poensgen, Munich, Germany, assignor to Siemens Aktiengesellschaft, Berlin & Munich, Germany
Filed Sept. 30, 1976, Ser. No. 728,294
Claims priority, application Germany, Oct. 7, 1975, 2544940
Int. Cl.^{2} G02F *1/13*
U.S. Cl. 350—160 LC **8 Claims**

1. In a liquid-crystal display having two carrier plates between which a liquid crystal material is enclosed in hermetically sealed relation, and having respective electrode coatings on their inner surfaces, the combination of at least one carrier plate having a polarizer disposed on the outer surface thereof, which comprises a chemically inert, transparent and optically

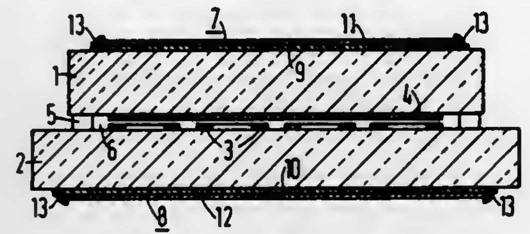

inactive protective foil and a dichroic layer disposed between the protective foil and the carrier plate, the marginal edges of the polarizer being covered with coating means for sealing the dichroic layer from atmospheric influences, particularly humidity.

4,061,419
VARIABLE MAGNIFICATION LENS SYSTEM
Edgar Elmer Price, Webster, and Louise Leone Spurles, Rochester, both of, NY, assignors to Xerox Corporation, Stamford, Conn.
Filed Mar. 3, 1976, Ser. No. 663,397
Int. Cl.^{2} G02B *15/14*
U.S. Cl. 350—184 **6 Claims**

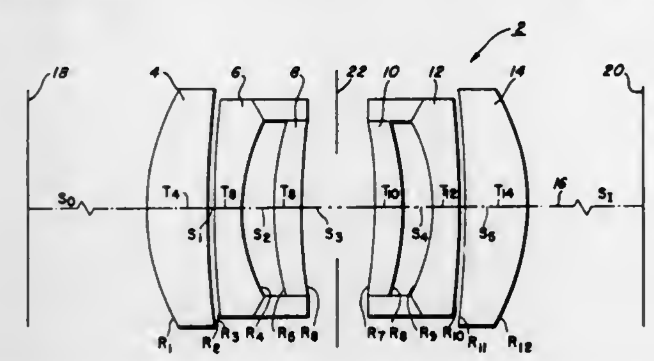

1. A variable magnification lens including the following lens elements in alignment along an optical axis:
a front positive crown element,
a front negative flint element spaced from said crown element,
a front meniscus element spaced from said flint element,
a back meniscus element spaced from said front meniscus element,
a back negative flint element spaced from said back meniscus element,
a back positive crown element spaced from said back flint element,
said crown elements being fixed relative to each other,
said flint and meniscus elements being movable along said optical axis to vary the focal length of said lens.

4,061,420
CATADIOPTRIC LENS SYSTEM
Edward K. Kaprelian, Mendham, and William E. Mimmack, Morristown, both of N.J., assignors to Questar Corporation, New Hope, Pa.
Filed May 6, 1976, Ser. No. 683,834
Int. Cl.^{2} G02B *17/08*
U.S. Cl. 350—199 **9 Claims**

1. A catadioptric objective comprising an aspheric negative meniscus corrector plate concave to the long conjugate, a primary mirror of the Mangin type spaced from said corrector plate and receiving light transmitted therethrough, a secondary mirror comprising a reflective area at the center of the second surface of said corrector plate and receiving light reflected from said primary mirror, and a spaced apart pair of

corrector lenses located between said primary and secondary mirror for receiving light from the latter, said pair of corrector

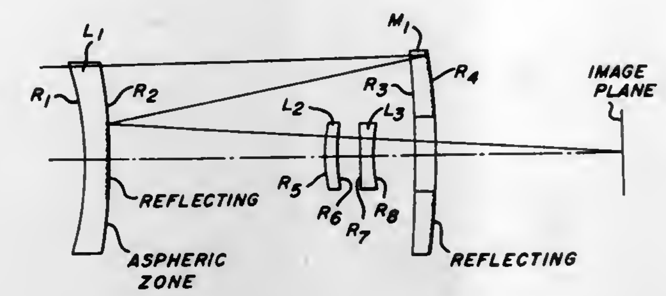

lenses comprising a positive meniscus lens convex to received light and a biconcave lens.

4,061,421
RETROFOCUS TYPE LENS SYSTEM HAVING ULTRA-WIDE ANGLE OF VIEW
Jihei Nakagawa, Higashimurayama, Japan, assignor to Olympus Optical Co., Ltd., Japan
Filed June 29, 1976, Ser. No. 700,951
Claims priority, application Japan, June 30, 1975, 50-80643
Int. Cl.^{2} G02B *13/04*
U.S. Cl. 350—214 **3 Claims**

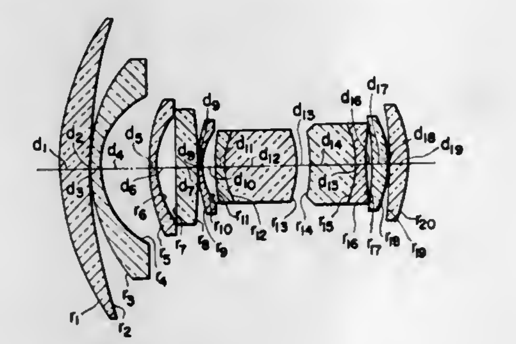

1. A retrofocus type lens system having ultra-wide angle of view comprising a first positive meniscus lens component, a second negative meniscus lens component, a third negative meniscus lens component, a fourth positive lens component, a fifth negative meniscus lens component, a sixth lens component having positive refractive power, a seventh lens component having negative refractive power, an eighth positive meniscus lens component and a ninth positive lens component, said lens system satisfying the following conditions:

1. $1.8f < f_B < 2.3f$
2. $4.5f < f_1 < 6.5f$
3. $4.5f < f_4 < 6f$
4. $0.05f < d_{10} < 0.1f$
5. $0.6f < D_6 < 0.75f$

wherein, the reference symbol f represents the total focal length of the entire lens system as a whole, f_B is the back focal length of the entire lens system as a whole, the reference symbol f_1 designates the focal length of the first lens component, the reference symbol f_4 denotes the focal length of the fourth lens component, the reference symbol d_{10} represents the airspace between the fifth and sixth lens components, and the reference symbol D_6 designates the thickness of the sixth lens component.

4,061,422
LIGHT REFLECTING CASING
Petrus T. J. Geurts, Horst, and Albert J. Wittenberg, Velden, both of Netherlands, assignors to Océ-van der Grinten N.V., Venlo, Netherlands
Filed Feb. 25, 1976, Ser. No. 661,171
Claims priority, application Netherlands, Mar. 4, 1975, 7502508
Int. Cl.^{2} G02B *5/10*
U.S. Cl. 350—293 **14 Claims**

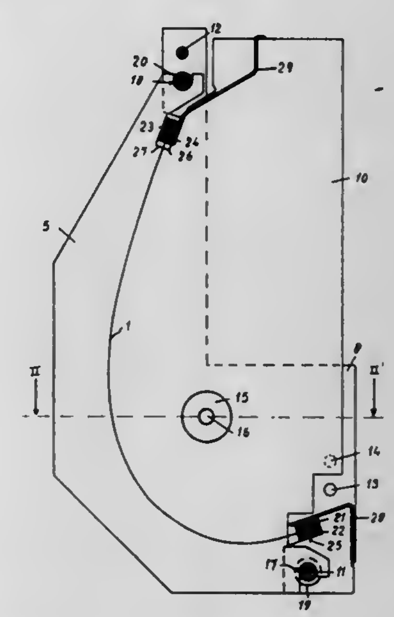

1. A reflecting casing comprising a resilient foil having a surface for reflecting light from one side of said foil, means including a plurality of support members having aligned curved surfaces for engaging the other side of said foil and shaping said foil to the form of a developable ruled surface, and means for holding said foil curved elastically into engagement with said curved surfaces, yet keeping the curved foil movable in its own plane, said holding means engaging edge portions only of said foil.

4,061,423
ILLUMINATION SYSTEM FOR OPHTHALMOSCOPE
Oleg Pomerantzeff, Brookline, Mass., assignor to Retina Foundation, Boston, Mass.
Continuation-in-part of Ser. No. 536,879, Dec. 27, 1974, Pat. No. 3,954,329, which is a continuation-in-part of Ser. No. 292,150, Sept. 25, 1972, and Ser. No. 512,327, Oct. 4, 1974, Pat. No. 3,944,341. This application Mar. 26, 1976, Ser. No. 670,701
Int. Cl.^{2} A61B *3/14;* **G02B** *5/16*
U.S. Cl. 351—16 **19 Claims**

1. In a device for optically examining an eye and having eye illuminating means and viewing means, said eye illuminating means including a light conduit having an exit facet for contact with the eye, the improvement comprising receptacle means supportingly mounting said light conduit for movement along an optical path, biasing means for biasing said light conduit toward a first position relative to said receptacle means in which said exit facet is exterior of said receptacle, said light

conduit having a light entrance facet disposed within said receptacle means and means in said illumination means station-

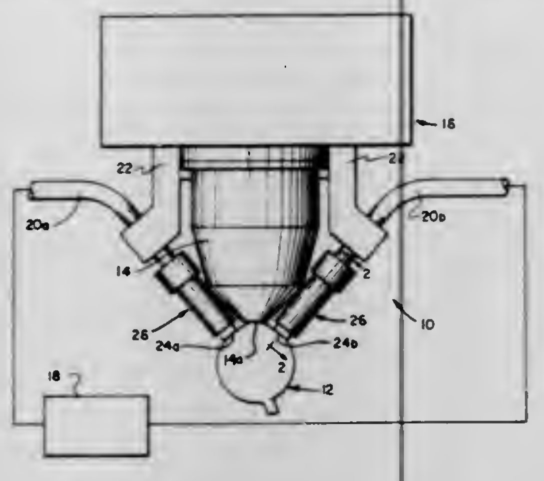

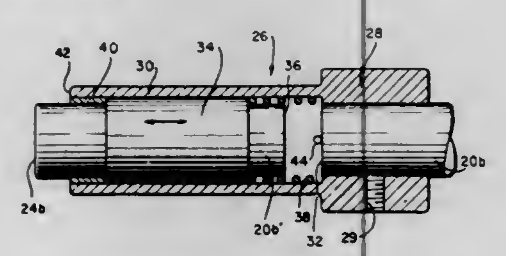

ary relative to said movement of said light conduit for radiating light onto said entrance facet within said receptacle means.

4,061,424
PHOTOGRAPHIC ENLARGER WITH MEANS FOR TRIMMING
Tetsuo Onishi, Wakayama, Japan, assignor to Noritsu Koki Co., Ltd., Wakayama, Japan
Filed Apr. 8, 1976, Ser. No. 675,220
Claims priority, application Japan, Apr. 25, 1975, 50-50407
Int. Cl.² G03B *27/52*
U.S. Cl. 355—63 **5 Claims**

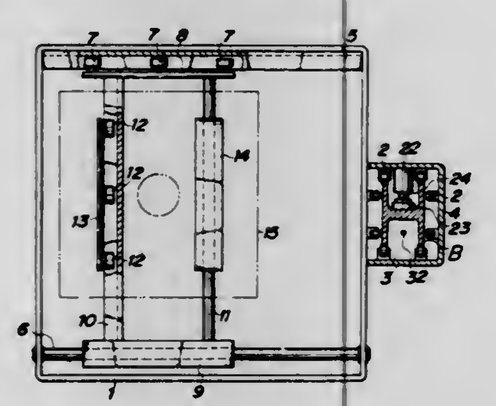

1. A photographic enlarger comprising:
a generally horizontally-disposed easel for mounting a photosensitive paper;
a vertical column stationarily disposed with respect to said easel;
a generally horizontally-disposed frame member, slidably mounted on said vertical column for vertical movement up and down said vertical column;
a first carriage assembly slidably supported by said frame member for linear movement, in a horizontal plane, relative to said frame; and
a second carriage assembly supported by said first carriage assembly and slidably mounted for linear movement in a horizontal plane, at a right angle to the path of linear movement of said first carriage assembly, said second carriage assembly supporting a housing for a light source, means for mounting a photographic negative, a projection lens and means for focusing an image projected through said lens onto the photosensitive paper.

4,061,425
HIGH RESOLUTION ALIGNMENT INTERFEROMETER
Jackie F. Wade, Littleton, Colo., assignor to Martin Marietta Corporation, Rockville, Md.
Filed July 6, 1976, Ser. No. 702,443
Int. Cl.² G01B *9/02*
U.S. Cl. 356—110 **10 Claims**

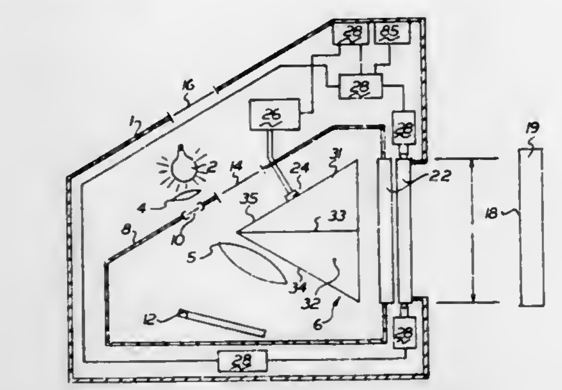

1. An autocollimator comprising a light source, a beam splitter-reflector having means for producing a zero order interference fringe fixed at an apex of said beam splitter-reflector and rotating about an axis at said apex with respect to angular misalignment of an autocollimating mirror with respect to a base of said beam splitter-reflector, and means for sensing the position of said zero order interference fringe.

4,061,426
OPTICAL ALIGNMENT DEVICE AND METHOD OF USE
Howard M. Jamison, Aberdeen, Md., assignor to The United States of America as represented by the Secretary of the Army, Washington, D.C.
Filed Mar. 5, 1976, Ser. No. 664,334
Int. Cl.² G01B *11/26*
U.S. Cl. 356—138 **7 Claims**

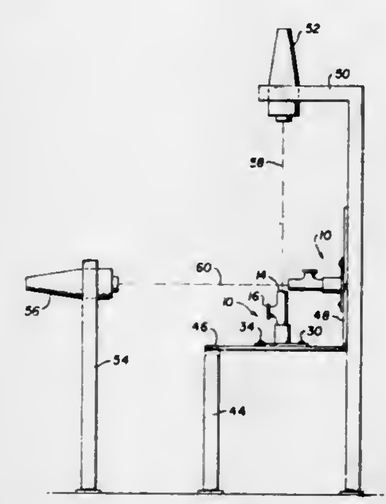

1. A device for optically aligning a source of radiation and a radiation receiver having a planar surface along a selected optical axis comprising:
a housing,
a first optical path in said housing,
means for positioning said housing on said receiver such that said first optical path is coincident with said optical axis, wherein said positioning means includes a substantially planar portion, at least three elements extending from said substantially planar portion and adjustably mounted to said substantially planar portion for positioning said first optical path perpendicular to said planar surface of said receiver, and means for indicating four reference points on a surface of said receiver from which the point at which said optical axis intersects said surface can be determined,
first port means in said housing along said first optical path for providing optical access for said source to said first optical path,

means in said housing for producing a second optical path in said housing intersecting at an angle with said first optical path, and
second port means in said housing along said second optical path for providing optical access to said first optical path via said second optical path.

4,061,427
LASER EXTENSOMETER
James C. Fletcher, Administrator of the National Aeronautics and Space Administration, with respect to an invention of Phillip J. Stocker, South Pasadena, Calif., and Harris L. Marcus, Austin, Tex.
Filed Oct. 15, 1976, Ser. No. 732,630
Int. Cl.² G01B *11/08*
U.S. Cl. 356—159 **14 Claims**

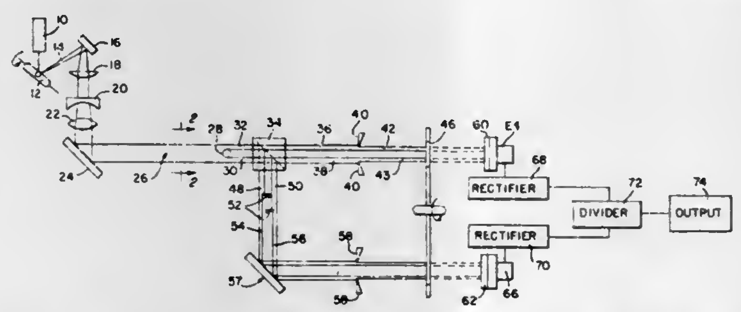

1. A laser extensometer for measuring the cross-sectional dimension of a sample, comprising:
a source of radiant energy for directing a beam of energy incident to the sample, the cross-sectional width of said beam being larger than the cross-sectional width of the sample;
beam splitter means for dividing the radiant energy passing around the sample into a measurement and a reference beam of radiant energy, the sample located between said source of radiant energy and said beam splitter;
first pair of blocking means spaced apart a distance larger than the dimensions of the sample, said blocking means disposed in the path of said reference beam and trimming said reference beam so that said reference beam carries only information of said reference beam intensity;
means for receiving said reference and said measurement beams, and for producing an electrical signal for each of said beams;
circuitry means for dividing said electrical signals into one another; and
output means for displaying the resultant signal produced by said circuitry means, whereby said resultant signal is directly proportional to the size of the sample shadow.

4,061,428
SCANNING COLOR DENSITOMETER
Tadashi Amano, and Masaji Nakamura, both of Hino, Japan, assignors to Konishiroku Photo Industry Co., Ltd., Tokyo, Japan
Filed June 18, 1976, Ser. No. 697,535
Claims priority, application Japan, June 21, 1975, 50-76113
Int. Cl.² G01J *3/50*
U.S. Cl. 356—175 **8 Claims**

1. A scanning color densitometer for measuring the areal distribution of the photographic densities of blue-light component, green-light component and red-light component separately by optically scanning substantially the entire area of an image, comprising
plural light-conducting members having incident faces arranged across the image being moved and having light-emitting faces arranged on a first circle,
a rotary disc positioned so as to face said light-emitting faces and having at least three windows formed therein on a second circle, said second circle being coaxial to and having substantially the same diameter as that of said first circle,
plural blue, green and red filters mounted in said at least three windows, respectively,
photoelectric converters disposed in optical paths defined by said filters and said light-emitting faces so as to receive the light through said filters from said light-emitting faces,

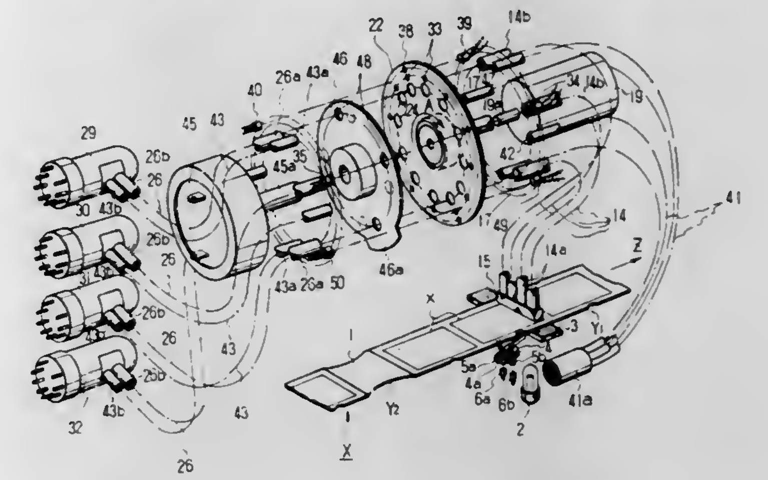

a first detecting means for detecting the rotational position of said rotary disc and emitting a signal when said filters of a particular color become located in front of said light-emitting faces, and
a second detecting means for detecting the rotational position of said rotary disc and releasing a command for the density measurement when any of said filters of any color become located in front of said light-emitting faces.

4,061,429
WHEEL BRAKE ASSEMBLY
Thomas P. Mathues, Miamisburg, Ohio, assignor to General Motors Corporation, Detroit, Mich.
Filed Oct. 26, 1976, Ser. No. 735,454
Int. Cl.² F16D *65/02*
U.S. Cl. 188—206 A **2 Claims**

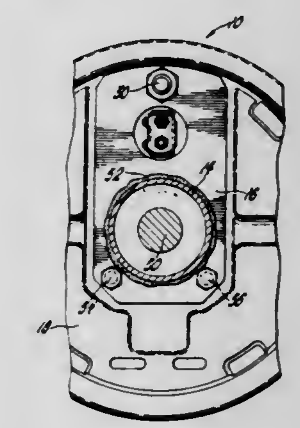

1. A wheel brake assembly comprising:
a wheel brake unit including
a backing plate having an axle-receiving opening formed centrally therethrough and being formed of material having a strength characteristic incapable of taking brake torque,
brake shoes mounted on said backing plate for guided braking movement,
brake torque-taking means for taking brake torque from said shoes and including an anchor pin extending through an opening in said backing plate radially outward of said axle-receiving opening and providing backing plate circumferential locating and mounting means,
and a wheel cylinder for braking actuation of said brake shoes, said wheel cylinder having mounting means extending through an opening in said backing plate radially outward of said axle-receiving opening and

provided with brake actuating fluid connection and bleed means;

a wheel axle support member;

and a brake unit mounting flange fixed to said axle support member against movement under torque, first means securing said brake torque-taking means to said mounting flange and second means securing said wheel cylinder to said backing plate whereby brake torque is transmitted from said brake shoes to said mounting flange to said support member independently of said brake unit bacing plate so that brake torque is not exerted on said backing plate;

said backing plate being mounted on said mounting flange by said anchor pin on one side of said axle-receiving opening and by fastening means on the other side of said axle-receiving opening.

4,061,430

SOCKET STRUCTURE FOR THE BALL OF A BALL POINT PEN REFILL

Heinz Günther Herrnring, Alveslohe, Germany, assignor to Montblanc-Simplo GmbH., Hamburg, Germany

Continuation-in-part of Ser. No. 456,806, April 1, 1974, abandoned, which is a continuation-in-part of Ser. No. 366,855, June 4, 1973, Pat. No. 3,837,750. This application Mar. 1, 1976, Ser. No. 662,940

Claims priority, application Germany, June 2, 1972, 2226902

Int. Cl.² B43K *7/10*

U.S. Cl. 401—216 **5 Claims**

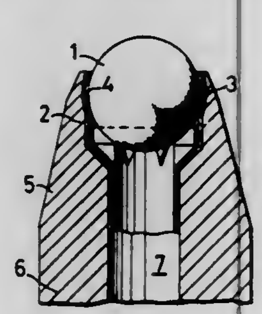

1. For use in connection with a ball point writing instrument refill, the combination of: a multi-layer bearing socket having an outer supporting shell comprising therein an outer dispersion layer of a substance selected from the group consisting of chromium nickel, and an alloy containing at least one of the metals chromium, nickel, silver and copper, said alloy having dispersed therein a carbide portion with a hardness exceeding 600 kg/sq. mm Vickers; an inner lining supported by said outer disperson layer arranged inside said outer shell and firmly connected thereto, said inner lining having a hardness of less than 200 kg/sq. mm Vickers, and a ball slidably engaged and embraced by said inner lining.

4,061,431

LIGHT MEASURING AND INDICATING CIRCUIT

Kenji Toyoda, Kawasaki, Japan, assignor to Nippon Kogaku K.K., Tokyo, Japan

Filed Nov. 4, 1975, Ser. No. 628,654

Claims priority, application Japan, Nov. 20, 1974, 49-132790

Int. Cl.² G01J *1/42;* **G03B** *7/08*

U.S. Cl. 356—227 **21 Claims**

1. A light measuring and indicating circuit comprising means for producing three signals, the value of one of which varies relative to the values of the others in accordance with light intensity, comparator means for producing a first output when said one signal has a value less than the values of the other signals and for producing a second output when said one signal has a value greater than the values of said other signals, reversible counter means, means for operating said counter means in one direction in response to said first output, means for operating said counter means in the opposite direction in response to said second output, indicator means responsive to an output from said counter means, and means for controlling the value

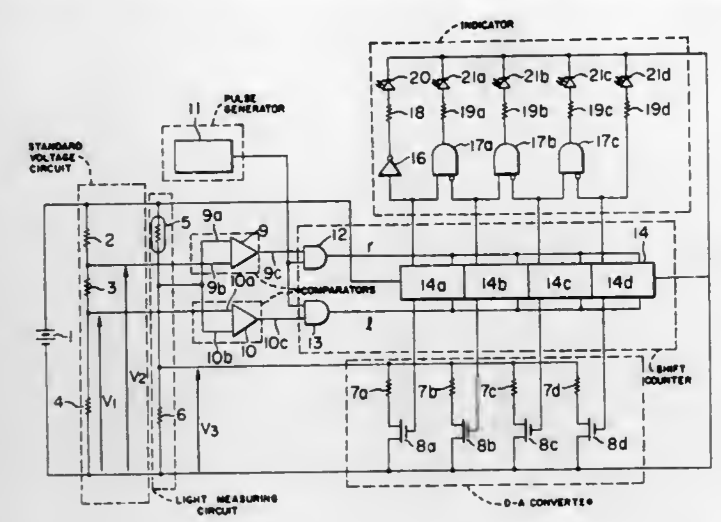

of said one signal relative to the values of the other signals in response to an output from said counter means.

4,061,432

RELEASABLE LOCK FOR EXCAVATING TOOTH

Frederick C. Hahn, and Larren F. Jones, both of Aloha, Oreg., assignors to Esco Corporation, Portland, Oreg.

Filed Apr. 22, 1976, Ser. No. 679,210

Int. Cl.² B25G *3/36*

U.S. Cl. 403—318 **4 Claims**

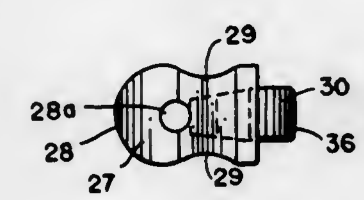

1. A releasable lock for an excavating tooth comprising:

a generally resilient plug element having a generally rigid face;

a generally rigid, relatively elongated pin element having a generally rigid face for releasable locking engagement with the face of said plug element, and

each of said element faces being equipped with a plurality of angularly related planar surfaces arranged to provide alternating crests and valleys in a direction parallel to the length of said pin element,

said plug being equipped with a unitary relatively rigid insert, said insert being partially received and retained in said plug element and partially extending therefrom, the portion of said insert extending from said plug element being equipped with said face;

said plug element being relatively elongated in a direction parallel to the length of said pin element, said plug having longitudinally extending recess means in a wall thereof to accommodate flexure upon engagement with said pin element.

4,061,433

EXTENSION ROD FOR PERCUSSIVE DRILLING TOOL

Henri Chave, Bourg en Bresse, France, assignor to Ugine Aciers, Paris, France

Filed July 20, 1976, Ser. No. 707,020

Claims priority, application France, Aug. 13, 1975, 75.25708

Int. Cl.² F16B *7/04*

U.S. Cl. 403—359 **9 Claims**

1. A composite extension rod for interconnecting a drilling tool and a percussion means, said extension rod comprising:

a. a central tube, said tube being hollow throughout to allow flow of cooling fluid,

b. a plurality of elongated parallel high strength rods of a

cross-section smaller than said tube arranged about the periphery of said tube, each rod being in contact with the next adjacent parallel rod,

c. an outer sheath covering said parallel rods and holding said rods against said tube, and

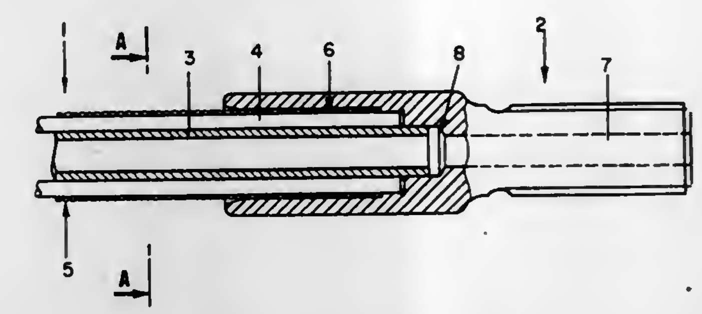

d. coupling means secured to said rod on each end for connection to said drilling tool and percussion means respectively.

4,061,434

REINFORCED CONCRETE CATCH BASIN COVER AND LID

Glenn T. Carroll, 1850 Price Road, Youngstown, Ohio 44509

Filed Mar. 21, 1977, Ser. No. 779,608

Int. Cl.² F16D *1/00;* **F16L** *25/00*

U.S. Cl. 404—4 **4 Claims**

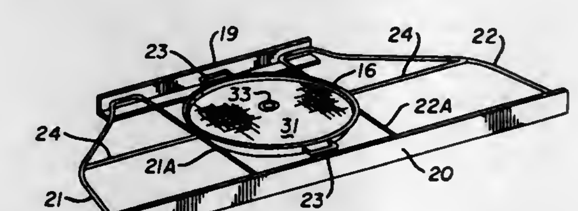

1. A reinforced concrete catch basin cover and lid comprising a reinforcing member having spaced parallel front and back angle iron sections, interconnecting members secured thereto and a ring member disposed centrally thereof, said front and back sections and the outermost ones of said interconnecting members defining a shape substantially the same as that of the concrete catch basin cover and a cast concrete body enveloping said reinforcing sections and members, said ring defining an opening in said cover.

4,061,435

ROADWAY DELINEATOR

Donald W. Schmanski, and Thomas J. Rose, both of P.O. Box 1298, Carson City, Nev. 89701

Filed Aug. 19, 1976, Ser. No. 716,021

Int. Cl.² E01F *9/00*

U.S. Cl. 404—10 **8 Claims**

2. A roadway delineator comprising

an elongate post made of elastic materials and having at least one longitudinal shear plane extending substantially the length of the post, and individual components separated by each said longitudinal shear plane;

a pointed tip telescoped onto one end of the post;

at least one collar closely fitting around and slidable on the post;

a cap having a flat, impact receiving upper surface and a lower recess closely fitting over the other end of the post;

a highway marker sign affixed to the collar; and

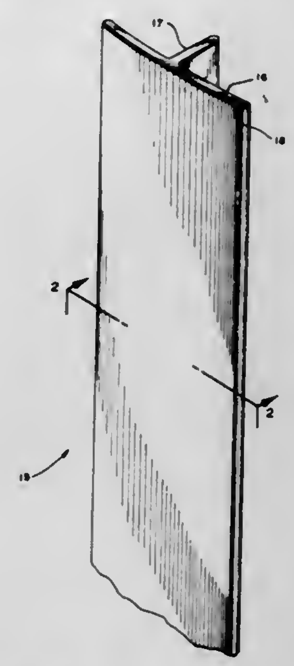

means fixing the collar to only one of the individual components of the post.

4,061,436

BANKNOTE INVALIDATING MACHINE

Franz Durrer, Kussnacht, Switzerland, assignor to Compagnie Industrielle Radioelectrique, Switzerland

Filed Oct. 1, 1976, Ser. No. 728,605

Claims priority, application Switzerland, Oct. 3, 1975, 12843/75

Int. Cl.² B23B *39/00;* **B26D** *7/06*

U.S. Cl. 408—3 **4 Claims**

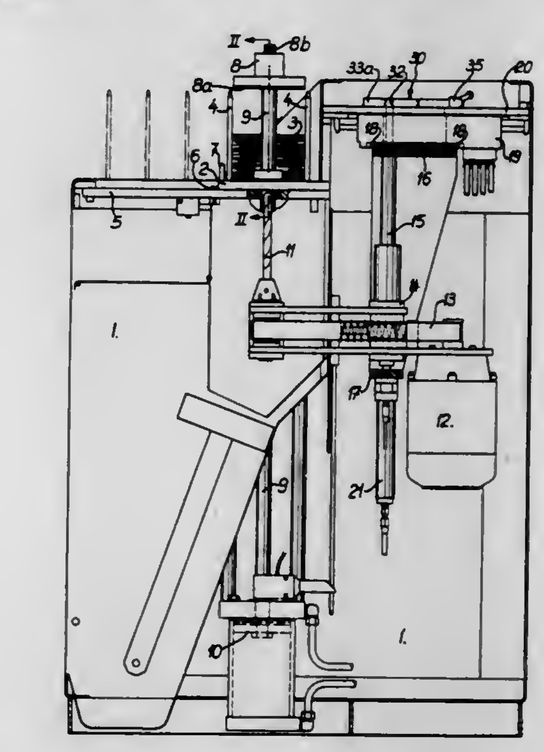

1. A banknote invalidating machine, comprising; a frame; a horizontal plate slidably mounted on the frame for receiving and supporting and for slidably positioning thereby on the frame a pile of banknotes, each parallel to the plate; means on the plate defining a space to be occupied thereon by the pile of banknotes; a press on the frame for compressing the pile of banknotes occupying said space, the slidable mounting of the plate being effective to slide the plate from a loading position thereof for receiving the pile of banknotes to a working position for the compressing of the pile and back to the loading position; a perforating tool movable relative to the plate and thereby relative to the pile of banknotes thereon; a support unit horizontally and vertically movable on the frame for mounting the perforating tool to register the tool, in the horizontal mov-

ing of the unit, with given locations of the compressed pile of notes in the working position; and means for repeatedly upwardly moving and downwardly returning the support unit and for actuating the perforating tool to perforate the pile of notes by the tool, at the given locations, in the vertical upward moving of the unit.

4,061,437
PILOT HOLE BORER
Delbert D. Strange, and Ronald M. Hunts, both of San Diego, Calif., assignors to Manufacturing Approaches & Total Concepts, Inc., San Diego, Calif.
Filed Sept. 16, 1976, Ser. No. 723,973
Int. Cl.² B23B *39/16*
U.S. Cl. 408—42 12 Claims

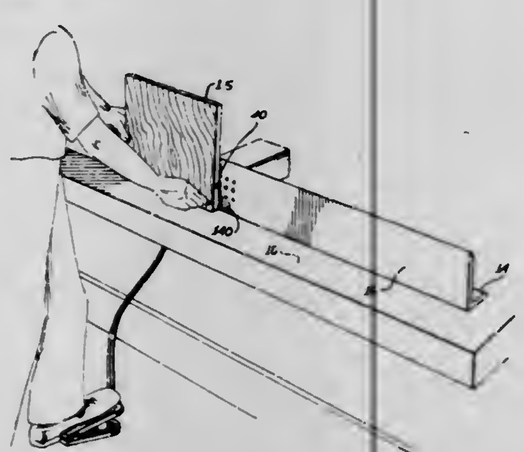

2. Apparatus for drilling guide holes in a base member, which guide holes receive securing means for attaching a precisely located fitting on the base member, said apparatus comprising in combination:
a. drill means for drilling a plurality of holes in spaced relation in the base member;
b. bracket means for supporting said drill means, said bracket means having an upstanding face thereon face and including indexing means for locating the base member along the face of said bracket means in relation to said drill means;
c. displacing means for extending said drill means through said bracket means into engagement with the base member and retracting said drill means out of engagement with the base member; and
d. controls means for selectively actuating said displacing means to drill the holes in the base member;
whereby, said drill means drills a plurality of holes precisely located in the base member.

4,061,438
BORING BARS
Ronald William New, Stoke Poges, England, assignor to National Research Development Corporation, London, England
Filed Jan. 26, 1977, Ser. No. 762,666
Claims priority, application United Kingdom, Feb. 5, 1976, 4600/76
Int. Cl.² B23B *47/00*
U.S. Cl. 408—143 15 Claims

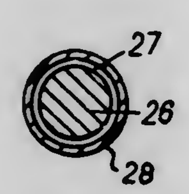

1. A boring bar comprising a tubular shank having a rearward end, by which it is mounted, and a forward end having means for mounting a cutting tool, a bung tight-fitted into at least a rear portion of the shank, said bung having a modulus of elasticity substantially greater than that of the shank, the shank having adjacent the tool mounting means a closed cavity in which is positioned a damper mass with a damping clearance between the mass and the inner wall of the cavity, said damping clearance containing a damping fluid.

4,061,439
IMPELLER PUMP AND VANE PUMP ASSEMBLY WITH CLUTCH DEACTIVATION
Karl H. Pech, Simsbury, Conn., assignor to Chandler Evans Inc., West Hartford, Conn.
Filed June 29, 1976, Ser. No. 700,763
Int. Cl.² B27C *9/00*
U.S. Cl. 415—18 5 Claims

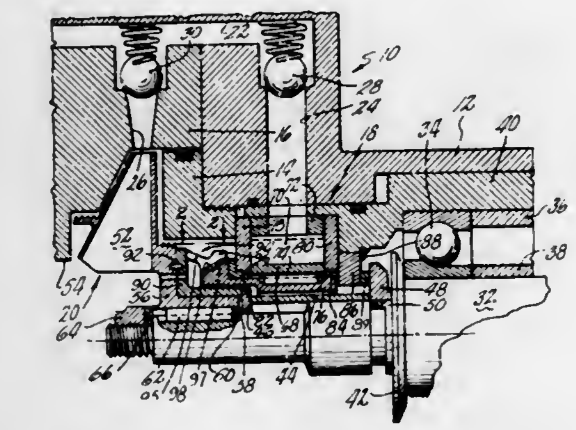

1. A fuel pump assembly for a gas turbine engine comprising:
a pump housing;
a primary drive shaft mounted for rotation within the housing;
an impeller mounted upon the drive shaft in driving connection therewith such that rotation of the primary drive shaft produces a corresponding rotation of the impeller;
a rotor having a plurality of slots therein mounted in the housing in encircling coaxial relationship to the primary drive shaft;
a plurality of radially movable vanes positioned in the slots;
a cam member mounted in the housing for engaging the radially outer surfaces of the vanes during rotation of the rotor for producing radially inward and outward vane movements;
a secondary drive shaft at least partially disposed between the primary drive shaft and the rotor in driving connection with the rotor such that rotation of the secondary drive shaft produces a corresponding rotation of the rotor;
means to engage the secondary drive shaft to drivingly interconnect the impeller and the secondary drive shaft;
spring means to bias the engaging means into contact with the secondary drive shaft; and
means urged radially outwardly by centrifugal force to progressively counter the bias of the spring means as the primary shaft speed increases and allow disengagement of the engaging means from the secondary drive shaft at a predetermined speed of the primary drive shaft.

4,061,440
DEVICE FOR CONTROLLING THE VARIATION IN PITCH OF THE BLADES OF A FAN
Pierre A. Belliere, Antibes, France, assignor to Ratier-Forest, Paris, France
Filed Apr. 21, 1976, Ser. No. 679,034
Claims priority, application France, Apr. 30, 1975, 75.13500
Int. Cl.² B64C *11/38*
U.S. Cl. 416—157 R 8 Claims

1. A device for controlling the variation in pitch of the blades of a fan carried by a rotary shaft, said device comprising:
a bevel-pinion secured to each said blade;
two bevel ring-gears coaxially arranged with respect to said

shaft and permanently in mesh with all said bevel pinions on opposite sides thereof;
two cylindrical tubular members arranged one inside the other coaxially about said shaft, the tubular members being spaced apart axially to form an annular space therebetween, the tubular members being coupled respectively for rotation with said two bevel ring-gears;
a plurality of carriages adapted to move axially within said annular space and each carriage having a cylindrical external face and a cylindrical internal face located respectively opposite to the internal face of the outer cylindrical tubular member and to the external face of the inner cylindrical member, the carriages having a helical groove cut in each said face thereof, said grooves being set at opposite angles of slope on the two faces of the carriages, the outer cylindrical tubular member having helical grooves cut in the internal face thereof, the helical grooves in said outer

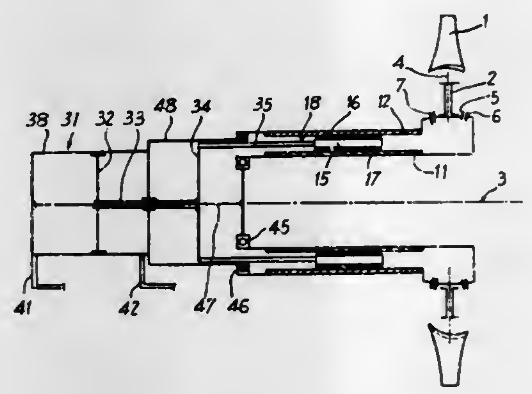

cylindrical tubular member mating with said helical grooves in said cylindrical external faces of said carriages, the inner cylindrical tubular member having helical grooves cut in the external face thereof, the helical grooves in said inner cylindrical tubular member mating with said helical grooves in said cylindrical internal faces of said carriages;
arrays of balls partially engaged in said helical grooves of said carriages and in said mating helical grooves of said cylindrical tubular members; and,
at least one axial hydraulic jack, said jack having a stationary part rigidly fixed to said shaft and a movable part rigidly fixed to said carriages, one of said two parts being a cylinder and the other part being a piston mounted for reciprocating motion in said cylinder without rotary motion relative thereto, all of the helical grooves being positioned externally with respect to said cylinder.

4,061,441
CENTRIFUGAL FAN FOR CIRCULATING ROOM AIR
Reynaldo Mejia, 122 S. Sixth St., Fowler, Calif. 93625
Filed Apr. 21, 1976, Ser. No. 678,883
Int. Cl.² F04D *29/28*
U.S. Cl. 416—175 1 Claim

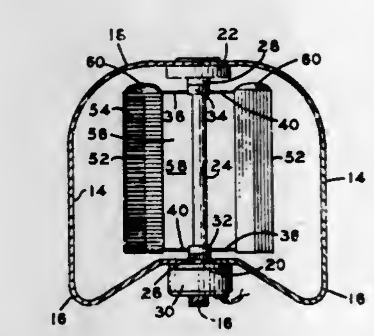

1. A fan for circulating room air comprising:
an impeller supported for unidirectional rotation about a vertically oriented axis including:
A. a vertically oriented impeller shaft supported for driven rotation;
B. a pair of spaced, horizontally oriented end plates mounted in vertical registration on said shaft for unidirectional rotation, each end plate of said pair comprising:
a center section having defined therein a uniform array of radially extended slots for accommodating passage of air vertically through the plate, a uniform array of arms, each arm being integrally related to the center section and radially extended from between a pair of adjacent slots, each arm of said array being characterized by a distal end having a trailing edge surface, relative to the direction of plate rotation, including contiguous linear segments defining therebetween an included angle greater than 90° but less than 180°;
C. a cylindrical array of vertically oriented impeller blades extended between the distal end portions of said arms and defining a pressure chamber concentrically related to the array of blades and communicating with the array of slots, each blade being characterized by planar panel segments defining along the leading surface thereof a compression chamber of a V-shaped cross-sectional configuration, the planes of the panel segments being coincident with vertical planes extended between the registered contiguous surfaces of the arms of the pair of end plates, each compression chamber being closed at the lowermost end thereof by a planar surface of the distal end of one arm of the lower plate;
D. a deflector of a compound curved configuration projected upwardly from the distal end of each arm of the upper plate defining an air scoop communicating with a juxtaposed compression chamber defined along the leading surface of one of said blades for forcing air downwardly into the compression chamber;
E. means including a plurality of angularly spaced bars defining a base for supporting said impeller in a vertical orientation; and
F. means including an electrically energizable motor connected with said shaft for imparting unidirectional rotary motion to said impeller.

4,061,442
SYSTEM AND METHOD FOR MAINTAINING A LIQUID LEVEL
Anthony W. Clark, Carrollton, and Rex G. Stubbs, Jr., Garland, both of Tex., assignors to Beckett Corporation, Dallas, Tex.
Filed Oct. 6, 1975, Ser. No. 619,901
Int. Cl.² F04B *49/00*; F25D *17/02*; G08B *21/00*
U.S. Cl. 417—36 9 Claims

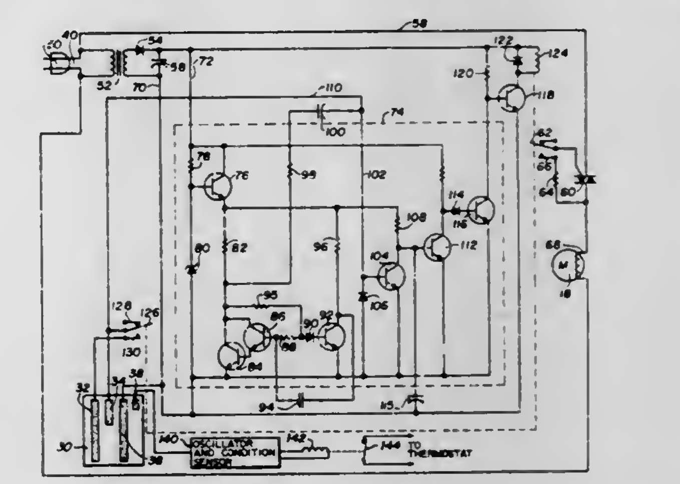

1. A liquid level control system for an air conditioner comprising:
first and second conductive probes suspended above a body of liquid and extending below a maximum desired level,
a third conductive probe suspended above the body of liquid and extending downwardly to said maximum desired level,
an oscillator normally coupled to said first and third probes for generating a high frequency signal,
electronic switching means coupled to said probes and said oscillator, said switching means being switched to a first

state in response to said high frequency signal when the liquid level does not contact said third probe and being switched to a second state when the liquid level contacts said third probe,

means responsive to said second state of said switching means for coupling said second probe to said oscillator, wherein said switching means is maintained in said second state as long as the liquid level contacts said second probe,

pump means responsive to said second state of said switching means for lowering the liquid level of the body of liquid, and

a fourth safety overflow prevention conductive probe connected to terminate operation of said air conditioner if the liquid level rises to a predetermined oveflow level.

4,061,443
VARIABLE STROKE COMPRESSOR
Dennis A. Black, Dayton, and Byron L. Brucken, Miamisburg, both of Ohio, assignors to General Motors Corporation, Detroit, Mich.
Filed Dec. 2, 1976, Ser. No. 747,043
Int. Cl.² F04B *1/26, 1/12;* **F01B** *13/04;* **F16H** *23/00*
U.S. Cl. 417—222 **5 Claims**

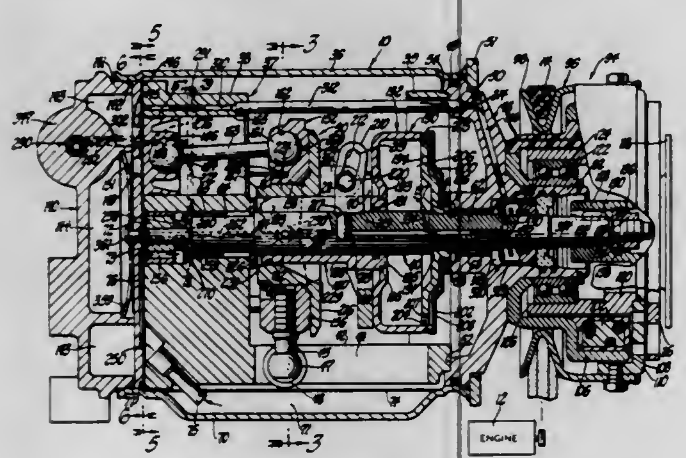

1. In a variable output compressor having a housing, a cylinder block disposed in said housing, a circular drive shaft having its one end journaled in one wall of said housing and its other end journaled in said cylinder block, said cylinder block having a plurality of cylinder bores formed therein substantially parallel to the axis of said drive shaft, pistons arranged to reciprocate in said cylinder bores, a wobble plate operated in response to rotation of said shaft and drivingly connected to said pistons, compressor output modulation means for varying the angle of said wobble plate relative to said drive shaft and thus the stroke of said pistons in said cylinder bores, and an expansible chamber type actuator including an axially movable member for actuating said modulation means, the improvement comprising in said modulation means a sleeve surrounding said drive shaft in sealing relation therewith and connected to said movable member for axial movement as a unit along the axis of said shaft while maintaining said sealing relation, a longitudinally extending slot in said sleeve, said wobble plate having a pivotal connection to said sleeve in line with the axis of said shaft for pivotal movement relative to said sleeve and said drive shaft during said axial movement of said sleeve to vary the angle of said wobble plate with respect to said drive shaft, and a radial lug on said drive shaft having a rotary driving connection to said wobble plate, said driving connection including means forming a cam track on said lug along the axis of said drive shaft, and a follower in said cam track interconnecting said wobble plate and said drive shaft and movable axially with respect to said lug in response to movement of said sleeve whereby said angle of said wobble plate is varied with respect to said drive shaft to infinitely vary the stroke of said pistons in said cylinder bores and thus the output of said compressor, said lug having a predetermined dimension relative to said slot such that when said lug is received in said slot a longitudinal clearance space is provided between said lug and the sides of said slot throughout the axial movement of said sleeve, said clearance space facilitating a direct rotary driving relation between said lug and said wobble plate while preventing a direct rotary driving relation between said shaft and said wobble plate at the pivotal connection of said wobble plate to said sleeve thereby to obviate torque load transfer between said shaft and said wobble plate at said pivotal connection.

4,061,444
COMPRESSOR MUFFLING ARRANGEMENT
William R. Dirk, and Sidney A. Parker, both of Fort Worth, Tex., assignors to Lennox Industries, Inc., Marshalltown, Iowa
Filed July 30, 1976, Ser. No. 710,012
Int. Cl.² F04B *21/00;* **F25B** *41/00;* **F01N** *7/18*
U.S. Cl. 417—312 **7 Claims**

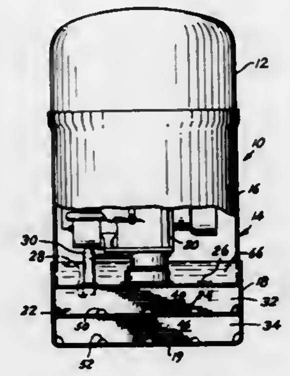

1. In a refrigerant compressor including outer housing means, compression mechanism within the outer housing means, and an oil sump within the outer housing means, the improvement comprising discharge gas muffling means formed within the outer housing means, such discharge gas muffling means comprising a part of the outer housing means, first wall means, and second wall means cooperating therewith to provide first and second chambers in the discharge gas muffling means, an inlet port in the second wall means for communicating the compression mechanism with the first chamber for receiving discharge gas from the compression mechanism, said first chamber communicating with said second chamber, and a discharge port from said second chamber adapted to communicate to a discharge line, and divider wall means in said first chamber and said second chamber having restricted openings therein for providing a plurality of muffling regions in said first and second chambers, a restricted opening in said first wall means communicating one muffling region in the second chamber with a muffling region in the first chamber, the oil sump defined within the compressor by the outer housing means and the second wall means, whereby discharge gas will pass from the inlet port through a plurality of restricted openings and expansion chamber muffling regions and will be discharged from the discharge port.

4,061,445
POWER-CONVERTING DEVICE
Niranjan Kumar Doshi, East St. Louis, Ill., assignor to Frank Apostol, St. Louis, Mo.
Filed May 10, 1976, Ser. No. 684,537
Int. Cl.² F01C *1/02, 19/04, 19/08;* **F04C** *17/02*
U.S. Cl. 418—54 **11 Claims**

1. A power-converting device that comprises a chamber which has a generally-cylindrical wall, a generally-elliptical rotor which is disposed within said chamber and which has a major axis, said rotor being mounted to rotate within said chamber and to reciprocate along said major axis as it rotates within said chamber, a plurality of seals that permit rotation and reciprocation of said rotor relative to said chamber while providing a sealing action between said rotor and said chamber, an inlet port for said chamber which admits fluid, an outlet port for said chamber which exhausts fluid, said rotor reciprocating as it rotates within said chamber, a shaft which has a gear thereon, a ring gear that meshes with and rotates with said gear on said shaft, and interacting surfaces on said rotor and on said ring gear which permit said rotor to rotate with said ring gear but to reciprocate relative to said ring gear.

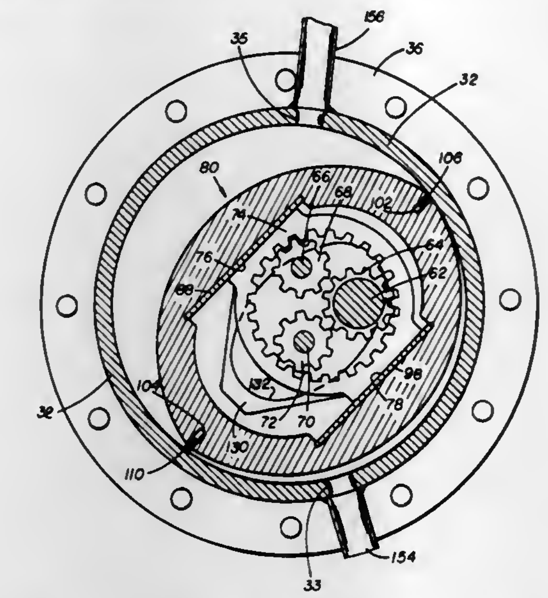

4,061,446
ROTARY AIR PUMP OR COMPRESSOR WITH FLEXIBLE END SEALING PLATES
Hiroshi Sakamaki, Utsunomiya; Toshiyuki Maeda, Ageo; Toshimitsu Sakai, Okazaki, and Tadashi Saitou, Toyota, all of Japan, assignors to Nippon Piston Ring Kabushiki Kaisha, Tokyo and Toyota Jidosha Kogyo Kabushiki Kaisha, Toyota, both of Japan
Filed Apr. 22, 1976, Ser. No. 679,444
Claims priority, application Japan, May 1, 1975, 50-59238[U]
Int. Cl.² F01C *19/08, 5/06;* **F04C** *27/00*
U.S. Cl. 418—133 **4 Claims**

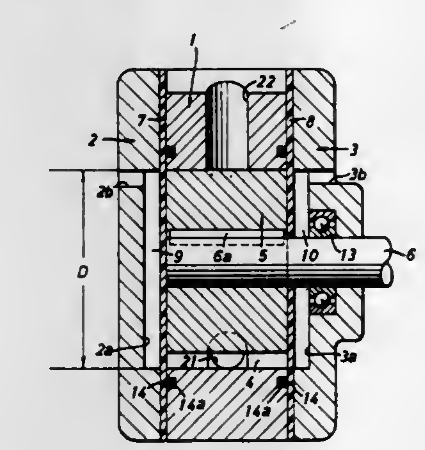

1. In a rotary air pump or compressor including a stator housing, end wall structure mounted on the opposite ends of said stator housing to form a cylindrical pump cavity and a rotor mounted within the pump cavity and co-operating with the inner peripheral wall of said stator housing to form suction, compression and delivery chambers; a flexible sealing plate comprising a flat peripheral flange portion clamped between the end faces of said stator housing and said end wall structure, and a substantially cone shaped portion protruding inwardly from said flat flange portion to be pressed upon assembly onto the end face of said rotor and substantially coinciding at its apex with the axis of said rotor, the height of said cone shaped portion from the inner surface of said flat flange portion being determined in a range of

$$\frac{\text{Inner diameter of the pump cavity}}{5 \times 10^2 \text{ to } 5 \times 10^3}$$

4,061,447
OIL SEAL FOR ROTARY ENGINE
Shinji Kato, Toyota, Japan, assignor to Toyota Jidosha Kogyo Kabushiki Kaisha, Toyota, Japan
Filed Feb. 5, 1975, Ser. No. 547,339
Int. Cl.² F01C *19/12*
U.S. Cl. 418—142 **11 Claims**

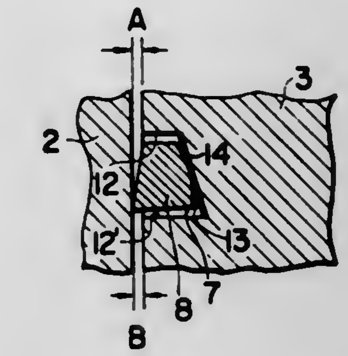

1. An oil seal device for a rotary engine characterized in that a rotor is provided capable of making eccentric rotation about an eccentric shaft within a rotor housing and side housing disposed covering both sides of said rotor housing, and annular recesses are provided in both side faces of said rotor so as to surround a hole through which the eccentric shaft extends, each of said recesses having a slant or bevel at its innermost end, and a radially elastic, annular seal ring supported by and having a surface in direct contact with each said slant or bevel for securing sealing between the respective sides of said rotor and the opposed faces of said side housing, at least one of said surface and said slant or bevel being arcuate, whereby after initial radial contraction or expansion each said seal ring is pressed axially against said side housing by radial movement of each said seal ring relative to its respective said slant or bevel caused by a restorative force from the initial contraction or expansion acting against the slant or bevel.

4,061,448
DRIVE FOR THE IGNITION DISTRIBUTOR OF AN INTERNAL COMBUSTION ENGINE
Hans-Ullrich Gondeck, Cologne, Germany, assignor to Ford Motor Company, Dearborn, Mich.
Filed Nov. 8, 1976, Ser. No. 739,893
Claims priority, application Germany, Nov. 11, 1975, 2550501
Int. Cl.² F01C *1/10;* **F03C** *3/00*
U.S. Cl. 418—170 **4 Claims**

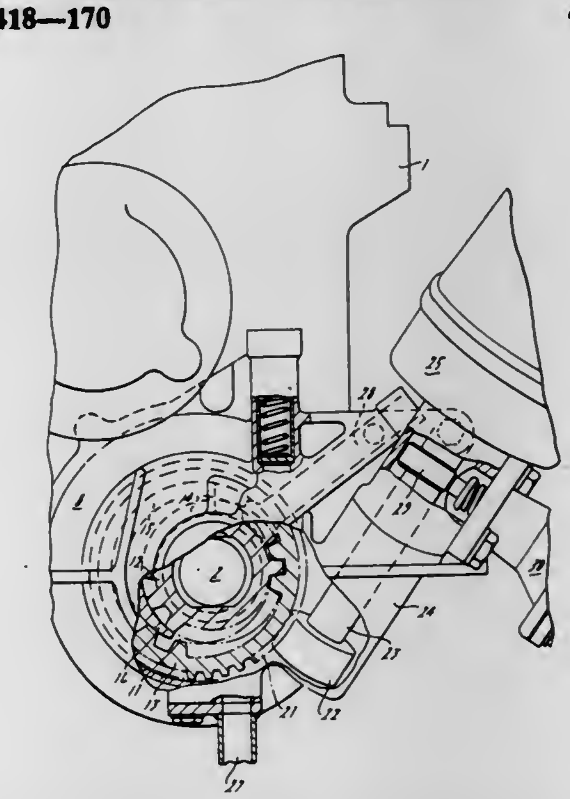

1. An improved drive for the ignition distributor of an inter-

nal combustion engine of the type having a crankshaft and a lubrication pump driven by said crankshaft, said lubrication pump including a housing, an external gear having internal teeth and an internal gear having external teeth meshing, in planetary gear fashion, with the internal teeth of said external gear, said internal and external gears being located in said housing, said internal gear driving said external gear and being coaxial with, and rotatably driven by, said crankshaft, wherein the improvement comprises:

a distributor shaft rotatably journalled in said housing of said lubrication pump; and

a pinion gear having helical teeth, said pinion gear being attached to said distributor shaft for causing rotation thereof, said external gear of said lubrication pump having external helical teeth meshing with said helical teeth of said pinion gear, said crankshaft when rotating driving said internal gear of said lubrication pump, said internal gear of said lubrication pump driving said external gear thereof, and said external gear driving said pinion gear and said distributor shaft.

4,061,449
FLUID ROTATING MACHINES WITH SPIRAL-LIKE PASSAGES AND VANE WHEELS

Eugeniusz M. Rylewski, 43 bis, Avenue du Gal Leclerc, 78470 St. Remy les Chevreuse, France

Filed Dec. 10, 1975, Ser. No. 639,629
Claims priority, application France, Dec. 12, 1974, 74.40998
Int. Cl.² F01C *1/00;* **F03C** *3/00;* **F04C** *1/00*
U.S. Cl. 418—226 **2 Claims**

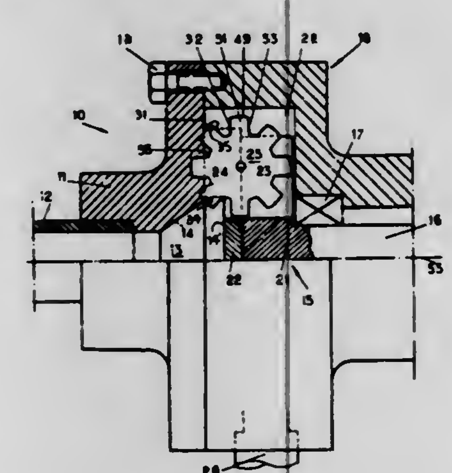

1. In a positive-displacement rotative machine in which the conversion of the pressure energy of fluids is obtained by the circulation of at least two spaced vane members in at least one spiral-like passage of revolution defined by rib members having top surfaces and side walls, wherein

said vane members are parts of at least two vane wheels,

each of said vane wheels is mounted for rotation about its own axis and housed in a slot formed in a first part of said machine,

said vane members circulate in said spiral-like passages of revolution formed in a second part of said machine,

at least one of said first and second parts of said machine is rotatable, the axis of rotation thereof constituting the main axis of rotation of said machine,

the axes of rotation of each of said vane wheels are transverse to said main axis of rotation of said machine,

said spiral-like passages of revolution are generated by a combined rotation of said vane members about the axis of rotation of their respective vane wheels and by rotation of said first part of said machine in relation to said second part of said machine,

said spiral-like passages are bound along their intermediate portions by a pair of said rib members while each end extremity portion thereof is bound by a single rib member,

said intermediate portions of said spiral-like passages are closed across the top surfaces of said rib members by a cooperating surface formed on said first part of said machine receiving said vane wheels in sliding contact therewith to thereby form channels for the circulating fluid, and

said spiral-like passages extend between an inlet and an outlet for the circulating fluid and have a continuous progressively varying cross-sectional area from the inlet to the outlet thereof,

the improvement therein which comprises:

said top surfaces of said rib members and said cooperating surface formed on said first part of said machine in sliding contact therewith each lie in a single plane,

the volume rates of flow at each of said end extremity portions of said spiral-like passages are substantially the same, and

said vane wheels are spaced apart a distance such that two successive vane members circulating in said spiral-like passages simultaneously circulate in said intermediate portions thereof for only a short moment,

whereby the volume rate of flow between two successive vane members circulating in said spiral-like passages is essentially contant.

4,061,450
POSITIVE DISPLACEMENT VANE TYPE ROTARY PUMP

Charles A. Christy, P.O. Box 485, Tijeres, N. Mex. 87059
Continuation-in-part of Ser. No. 564,288, April 2, 1975, Pat. No. 4,011,033. This application Oct. 27, 1976, Ser. No. 736,150
Int. Cl.² F01C *1/00*
U.S. Cl. 418—253 **6 Claims**

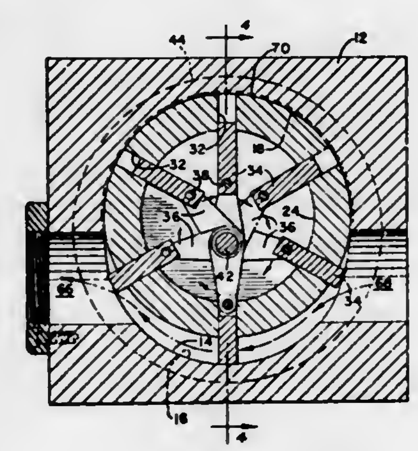

1. A vane rotary device comprising a housing member having a cavity extending therethrough, said cavity including two cylindrical portions having spaced-apart centers but having substantially equal radii of curvature, first and second end closure members, a rotor disposed in said cavity and rotatably supported in said housing member for rotation about an axis coaxial with the center of a first one of said two cylindrical portions, said rotor having a plurality of radial openings therein, vane means disposed in each of said radial openings for sliding movement therein and rotary movement along with said rotor, an inlet passage and an outlet passage in said housing member communicating with said cavity, said inlet passage being separated from said outlet passage by said first and second cylindrical portions, a second cylindrical portion of said cavity forming a circumferential channel extending from said inlet passage to said outlet passage, said channel in operation of said pump serving as a fluid pumping chamber, said vane means extending radially outwardly of said rotor and in substantial pressure sealing relationship with said channel but maintaining a slight clearance therebetween while being rotated through said channel by said rotor thereby pumping fluid from said inlet passage to said outlet passage, said first cylindrical portion of said cavity constituting a non-pumping circumferential portion between said outlet passage and said inlet passage over which said rotor passes with said vane means retracted within said rotor and a circumferential groove confined within said first cylindrical portion and having opposite ends terminating short of reaching said inlet and outlet passages to provide communication only between radial openings simultaneously passing said first cylindrical portion to relieve pressure therein and thereby to facilitate radial movement of said vane means, and said vane means comprise a plurality of sliding blade members each of which is supported on a fixed journal element for pivotal movement about an axis parallel to but eccentric to the axis of rotation of said rotor by at least one radially inwardly extending connecting link pivotally connected to said journal element and to said blade member.

4,061,451
INSTALLATION FOR THE ZONAL TREATMENT OF ELONGATED PRODUCTS

Gérard Bardet, Paris, France, assignor to Automatisme & Technique, Sevres and Desmarquest & C. E.C., Arcueil, both of France

Filed Oct. 15, 1975, Ser. No. 622,744
Claims priority, application France, Oct. 21, 1974, 74.35332
Int. Cl.² B29C *17/02*
U.S. Cl. 425—66 **7 Claims**

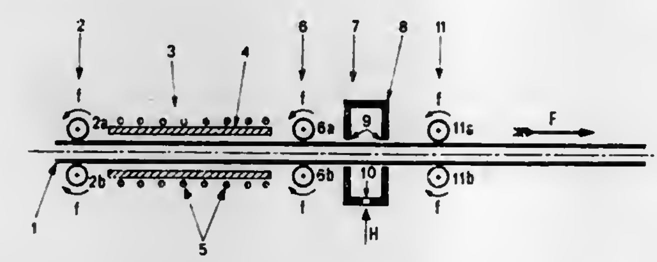

1. Apparatus for heating a predetermined zone of an elongated product, comprising:

means for introducing the elongated product to a predetermined zone of treatment;

means for extracting the treated product from said predetermined zone of treatment;

means at said predetermined zone defining a cavity resonator through which said elongated product passes along a longitudinal axis, said cavity resonator when supplied with ultrahigh frequency electromagnetic energy being operative to maintain stationary waves of a resonant mode at a fixed predetermined location occupied by said elongated product moving through said cavity resonator to obtain a concentration of said ultrahigh frequency energy in the elongated product within said zone; and

means operative to supply ultrahigh frequency electromagnetic energy to said cavity resonator.

4,061,452
APPARATUS FOR PRODUCING SPHERICAL ARTICLES

Raymond P. DeSantis, Royal Oak, Mich., assignor to Wolverine Aluminum Corporation, Lincoln Park, Mich.
Continuation of Ser. No. 619,898, Oct. 6, 1975, abandoned. This application Jan. 21, 1977, Ser. No. 761,003
Int. Cl.² B30B *11/02*
U.S. Cl. 425—78 **4 Claims**

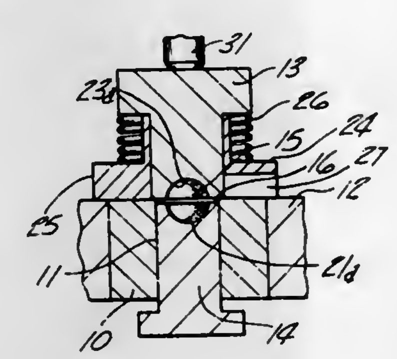

1. An apparatus for compacting powder material into a spherical article, said apparatus comprising a punch and die assembly comprising a stationary die plate, a bore in said die plate, a punch disposed reciprocably in said bore, a compacting face on the end of said punch forming a first half-mold cavity and an annular surface surrounding said first half-mold cavity, a counterpunch having a flat annular end surface engageable with said die plate and overlapping the bore in said die plate without penetrating into said bore, a second half-mold cavity disposed within said counterpunch end annular surface, said second half-mold cavity being of a diameter equal to and being alignable with said first half-mold cavity alignable with said first half-mold cavity, means for reciprocating said punch to a position for compacting said powder material in a molding cavity formed by said first and second half-mold cavities, support and guide means for said counterpunch provided with an end face in constant engagement with said die plate, means for applying a clamping force to said counterpunch with the overlapping portion of the flat end surface thereof in engagement with said die plate, abutment means on said counterpunch for engagement with said support and guide means for transmitting said clamping force to said support and guide means, and a slot in said support and guide means providing clearance for said article partially projecting from said die plate during lateral motion of said support and guide means subsequent to release of said clamping force.

4,061,453
TOOLING FOR A POWDER COMPACTING PRESS

Raymond P. DeSantis, Royal Oak, Mich., assignor to Wolverine Aluminum Corporation, Lincoln Park, Mich.
Continuation of Ser. No. 619,856, Oct. 6, 1975, abandoned. This application Jan. 21, 1977, Ser. No. 761,333
Int. Cl.² B30B *11/02*
U.S. Cl. 425—78 **5 Claims**

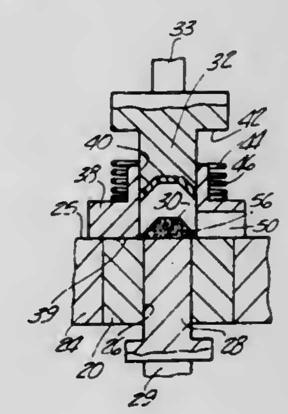

1. An apparatus for compacting powder material into a compacted article, said apparatus comprising a stationary die plate, a die in said die plate having a vertically disposed bore and an upper surface, a first punch reciprocably movable in said bore and having an upper end face, a second punch laterally displaceable to a position in axial alignment with said die bore, said second punch being reciprocably movable for overlappingly closing said bore upper end and having a lower end face provided with a cavity overlapping said bore, said cavity being closed by the end face of said first punch when in flush relation with said die upper surface and defining therewith a mold for compacting said powder material by displacement of said first punch toward said second punch, wherein at least part of said mold formed by said cavity is made of elastomeric material, support and guide means for said second punch provided with an end surface for engagement with said die plate, means for applying a clamping force to said second punch in engagement with said die plate upper surface with said cavity overlapping said bore, abutment means on said second punch for engagement with said support and guide means for transmitting said clamping force to said support and guide means, means for retracting said second punch away from said die upper surface, and a slot in said support and guide means for clearing said compacted article projecting above said die upper surface during lateral displacement of said second punch and said support and guide means after retraction of said second punch.

4,061,454
FACTORY-TYPE APPARATUS FOR PRODUCING PRESTRESSED CONCRETE PRODUCTS
Mircea Borcoman, 20, rue de Boulainvilliers, 75016 Paris, France
Filed Mar. 22, 1976, Ser. No. 668,930
Claims priority, application France, Mar. 27, 1975, 75.09580
Int. Cl.² B28B *1/10, 5/04, 23/04*
U.S. Cl. 425—88 **31 Claims**

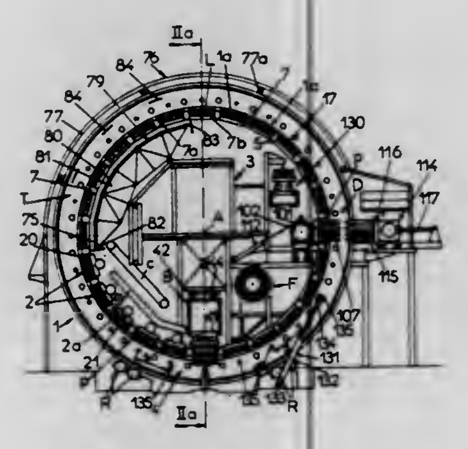

1. A monoblock factory or installation for the manufacture of concrete products, in particular prestressed and/or reinforced concrete products, comprising a rotary supporting housing of a general cylindrical shape having a horizontal axis of rotation, a plurality of working stations mounted on a construction disposed in the interior of said housing, and a plurality of conveying moulds, for the concrete products, disposed on the internal surface of said housing so as to cause these moulds to pass in front of various of said working stations, the said working stations comprising a concrete-casting installation, a heat-treatment installation and a mould-stripping and manufactured products discharge installation, said factory being characterized in that the rotary housing comprises a rotatable circular carrier structure having a horizontal axis and supported by means permitting the rotation of the said carrier structure on its axis, means for rotating said carrier structure and means resistant to longitudinal stresses in a direction parallel to the axis of rotation of the carrier structure, said resistant means being disposed radially inwardly of the carrier structure toward the axis of rotation and being fixed to the carrier structure, and comprising elongate longitudinal extending members defining longitudinal recesses extending parallel to the axis of rotation of the carrier structure and provided around the entire internal periphery of the said carrier structure, the said recesses receiving sets of moulds for the products to be manufactured, the said resistant means comprising at one longitudinal end, means for the attachment of reinforcement wires of the concrete products and, at its other longitudinal end, means for tensioning the reinforcement wires, such that the tensile stresses of these wires are taken up exclusively by the aforesaid resistant means.

4,061,455
APPARATUS FOR MOLDING AN INSERT MEMBER IN A FRAME MEMBER
John W. von Holdt, 7430 N. Croname Road, Niles, Ill. 60648
Filed May 6, 1976, Ser. No. 683,906
Int. Cl.² B29F *1/10*
U.S. Cl. 425—112 **11 Claims**

1. A mold for forming a member defining a frame, said frame surrounding and retaining an insert member, said mold comprising a pair of relatively movable cavity plate assemblies arranged, when positioned together, to define at least one cavity having the configuration of said frame-defining member, one of said cavity plate assemblies defining a channel spaced from said cavity for receiving and supporting a strip of insert-forming material, a plunger, carried by the other of said cavity plate assemblies, and movably positioned on an axis transverse to said channel, and in communication therewith, a punch movable through said one cavity plate assembly in alignment with said plunger, said punch being movable from a position on one side of said channel to a position intersecting said channel and thereafter to a position in abutting relation with said plunger in said cavity whereby an insert member may be sheared by said punch from said elongated strip of insert-forming material in said channel, and moved into engagement with said plunger in said cavity, said punch and plunger being

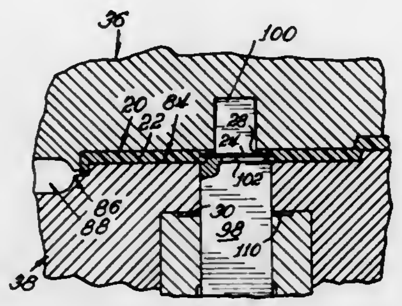

proportioned to retain and support said insert member with the margin of said insert member protruding laterally beyond the end of said punch and being exposed within the cavity, whereby plasticized material utilized to form said frame-defining member solidifies, upon being forced into said cavity, with at least a portion of the margin of said insert member embedded therein.

4,061,456
EXTRUDER FOR THE MANUFACTURE OF A SYNTHETIC RESIN FOIL IN THE SHAPE OF A SERPENTINE STRIP
Franciscus Elbertus Mulder, Putten, Netherlands, assignor to Proost en Brandt N.V., Amsterdam, Netherlands
Filed Oct. 30, 1975, Ser. No. 627,267
Claims priority, application Netherlands, Nov. 1, 1974, 7414315
Int. Cl.² B29F *3/08*
U.S. Cl. 425—140 **12 Claims**

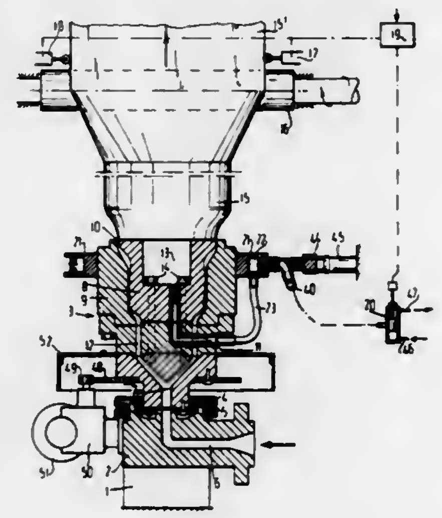

1. An extruder for the manufacture of a synthetic resin foil in the shape of a serpentine strip, said extruder comprising a rotatable extrusion head and a terminal for the controllable supply of air to the extrusion head in order to maintain a given excess pressure inside the forming strip of synthetic resin, characterized in that the rotatable extrusion head includes a hollow ring rotating with the head, the interior of said ring communicating with the air supply terminal for the head, in that an outer wall of the ring has a plurality of passages equally spaced apart in the circumferential direction and closed by non-return valves urged in the outward direction by spring force against the associated seats, said valves having a portion projecting out of the outer surface of said wall in the closed state, in that the outer surface of said wall being constructed in the form of a sliding face, with which sliding face cooperates a

stationary shoe having a depression, which shoe is spring pressed against said sliding face and the edges of which shoe co-operate in sealing fashion with the sliding face, said depression being provided with an air supply terminal, and in that the shoe engages the projecting portions of those valves lying beneath the shoe in order to urge such valves into the open position, the depression covering in the circumferential direction a distance at least corresponding with the distance between two passages plus twice the diameter of said passages.

4,061,457
APPARATUS FOR PRODUCING RUPTURE LINES IN FLEXIBLE PACKAGES
Robert W. Butler, 912 N. Colorado, Ulysses, Kans. 67880
Division of Ser. No. 578,132, May 16, 1975, abandoned. This application Apr. 26, 1976, Ser. No. 680,520
Int. Cl.² B29C *15/00*
U.S. Cl. 425—385 **7 Claims**

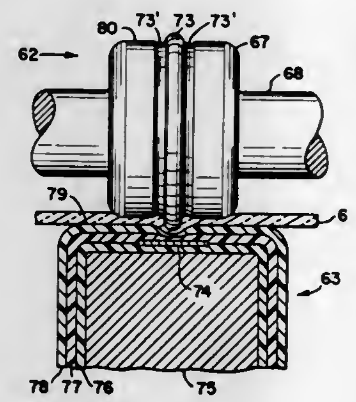

1. Apparatus for forming weakened areas in plastic film, said apparatus comprising:

a. a frame structure;

b. first mold means mounted on said frame structure and having a male portion with a first mold surface and a protuberance extending therefrom, said first mold surface and protuberance being engageable with one surface of a plastic film;

c. second mold means mounted on said frame structure and having a second mold surface adjacent and in facing relation with said first mold surface and protuberance, said second mold surface having a portion receiving said protuberance and being engageable with a second surface of the plastic film simultaneously with and adjacent said first mold surface whereby said film is interposed between said first and second mold surface while said protuberance is urged into deforming relation with said film and said film is urged into said second mold surface portion;

d. heating means in heat transfer relation with at least one of said first mold means and said second mold means for supplying heat thereto; and

e. means associated with said first and second mold means for selectively holding said male portion and said second mold surface in simultaneous engagement with said film for a predetermined time and under a predetermined pressure whereby said protuberance and second mold surface portion produce a weakened rupture area in said film of less thickness than the film area adjacent said less thickness area and interposed between said first and second mold surfaces.

4,061,458
APPARATUS FOR PROCESSING A WEB OF MATERIAL WITHOUT A STANDSTILL
Friedhelm Mundus, and Horst Schneider, both of Lengerich, Germany, assignors to Windmoller & Holscher, Lengerich, Germany
Filed July 9, 1976, Ser. No. 703,934
Claims priority, application Germany, July 9, 1975, 2530636
Int. Cl.² B29C *17/00*
U.S. Cl. 425—392 **8 Claims**

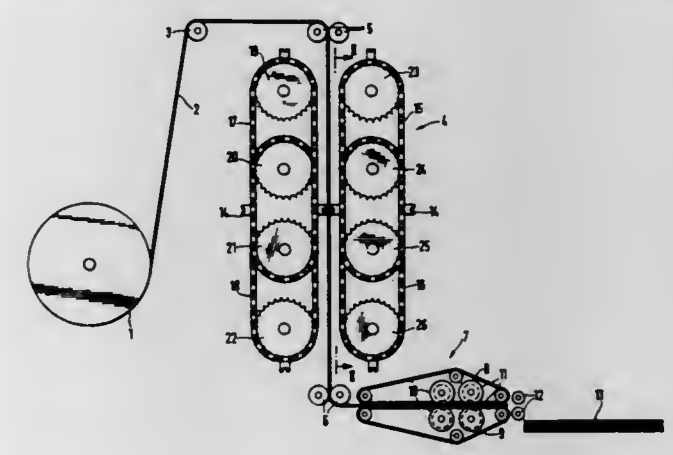

1. Apparatus for processing a moving web of material without a standstill at positions disposed at particular longitudinal intervals, comprising a plurality of tool carriers adapted to accept operative tools for performing said processing on said web which are guided in opposing pairs on endless chains arranged in front of and behind and on both sides of a planar processing path determined by the moving web and wherein a said opposing pair of guided tool holders are located in front of and behind said planar path and each pair serving to attach an opposing operative tool disposed transversely of the web and enclosing the web therebetween, the tool carriers being guided in endless circulating paths, characterised in that the semi-circular guide path curves (40) of the circulating paths, which curves are connected by rectilinear guide path sections entering at a tangent, are displaceable and settable relatively to one another to change their lengths said tool carriers (14) being movable along the circulating paths by juxtaposed parallel and overlapping endless chains (15, 16) guided over sprockets (23 to 26) of which the shafts (23.1 to 26.1) are relatively displaceable and settable in pairs in a manner corresponding to the displaceable portions of the circulating paths, the runs of the chains extending in one plane or at the same elevation at the zone of overlap, that the link pins or lugs of the chains are provided with extensions (28) which, in the overlapping section, are directed towards one another and leave a gap between each other, and said tool carriers (14) moving in circulating paths have at least two receptacles (30) engaging a corresponding number of successive extensions in the overlapping section, at the start of which the extensions (28) of one chain enter the receptacles (30) and at the end of which the extensions (28) of the other chain leave same.

4,061,459
COMBINED MOLD ELEMENT AND SEALING RING
Gunnar Parmann, 5076 Alvoy, Norway
Continuation-in-part of Ser. No. 608,758, Aug. 28, 1975, Pat. No. 4,030,872. This application Feb. 7, 1977, Ser. No. 766,516
Int. Cl.² B29C *17/02*
U.S. Cl. 425—403 **15 Claims**

12. A combined mold element and sealing ring comprising an annular body of elastically yieldable material, said body having an inner peripheral surface defining at least one radially inwardly protruding sealing portion, an outer

peripheral surface having an outer radially directed surface portion, and a nose portion one one side; and

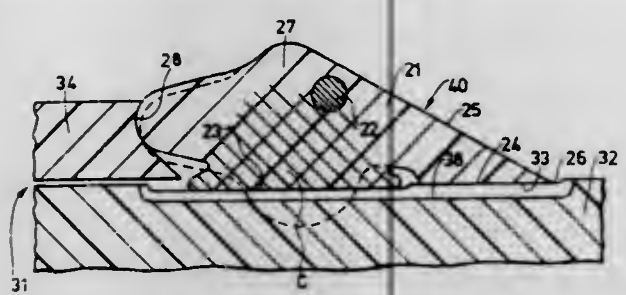

a rigid reinforcing non-elastic member disposed in said body and located in an area spaced radially outside said protruding sealing portion.

4,061,460
PEDAL POWERED POTTER'S WHEEL
John George, Box 625, Rte. 11, Tucson, Ariz. 85706
Filed July 6, 1976, Ser. No. 702,685
Int. Cl.² B28B *1/02*
U.S. Cl. 425—459 **2 Claims**

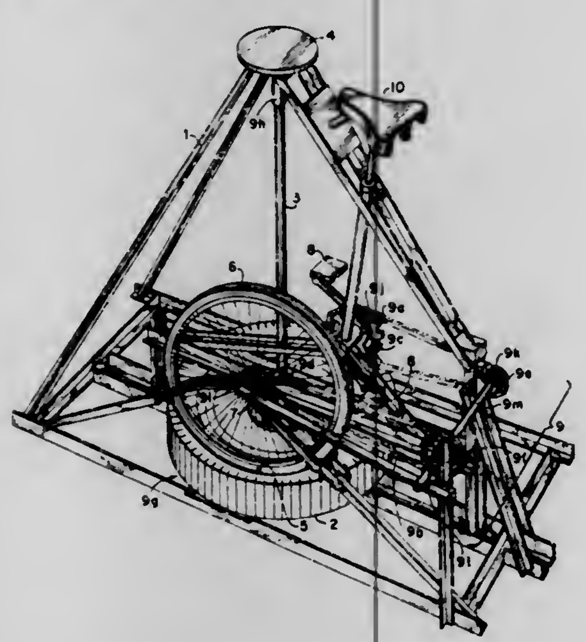

1. A pedal powered potter's wheel comprising in combination:

a. a frame;
b. a hollow, rubber flywheel containing water and air rotatably mounted within said frame about a vertical axis, the greatest bulk weight of said flywheel located toward the outer edge thereof;
c. a wheelhead shaft rotatably mounted within said frame along said vertical axis, said shaft being removably attached to a potter's wheelhead at its upper end and a rotatable means at its lower end;
d. a bicycle power drive wheel rotatably mounted within said frame about a horizontal axis such that the outer portion of said drive wheel pressingly contacts an upper portion of said flywheel at a 90° angle, and;
e. means including foot pedals on said drive wheel for actuating said drive wheel and in turn rotating said flywheel, wheelhead shaft and potter's wheel.

4,061,461
COMPOUND EXTRUSION DIE FOR PRODUCING AN INTERNALLY LINED EXTRUDATE
Herbert C. Hessenthaler, Bridgewater, N.J., assignor to Thermoplastice Processes Inc., Stirling, N.J.
Filed May 10, 1976, Ser. No. 684,500
Int. Cl.² B29D *23/04*
U.S. Cl. 425—462 **8 Claims**

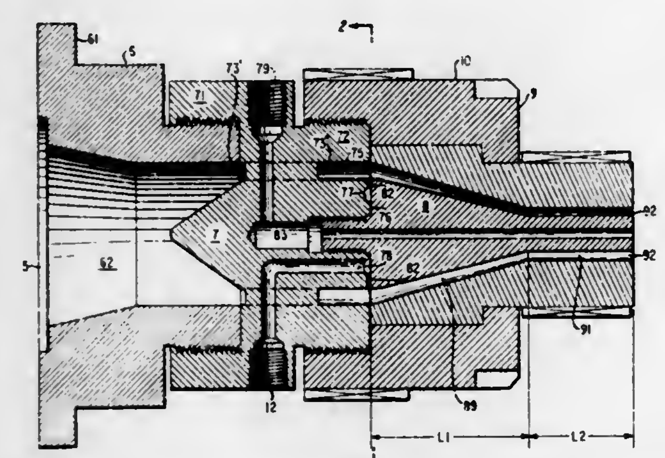

1. An extrusion die for producing a bonded extrudate of two thermoplastic materials comprising a main extrusion passageway having an annular cross-section for transporting a first extrudate stream and an increasingly constricted conical passageway joining said main passageway, a radial orifice intermediate and orthogonal to said main and said conical passageway for injecting a secondary extrudate onto the inside of said first extrudate stream, said radial orifice being positioned adjacent the upstream end of said conical passageway and an afterthroat passageway of substantially constant cross-sectional throat size downstream of said conical passageway.

4,061,462
APPARATUS FOR EXTRUDING THERMOPLASTIC MATERIAL
Giancarlo Giannarelli, Milan, and Walter Movilli, Bollate (Milan), both of Italy, assignors to Montedison S.p.A., Milan, Italy
Filed June 16, 1975, Ser. No. 586,910
Claims priority, application Italy, June 17, 1974, 24029/74
Int. Cl.² B29F *3/00*
U.S. Cl. 425—464 **3 Claims**

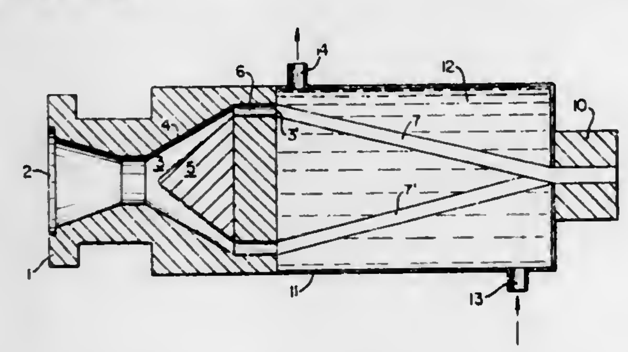

1. An extrusion machine for producing plates of thermoplastic material, said machine having an extrusion head with a molten material outlet zone shaped as a circular crown and a die member for plates; a set of separated tubes, one end of each tube being in fluid tight communication with said outlet zone of said circular crown and the opposite ends of the tubes being gathered on a same median line and in fluid tight communication with the die member, whereby molten material is transferred from said outlet zone to said die member in said tubes, the length and interior cross-section of the tubes being such that a constant pressure drop in molten material is produced in each tube, said set of tubes being immerged in a thermoregulated bath interposed between said extrusion head and said die member.

4,061,463
COMBUSTION SYSTEM AND METHOD
Henry J. Bennett, Palos Park, Ill., assignor to Burdett Manufacturing Company, Bridgeview, Ill.
Filed Dec. 12, 1975, Ser. No. 640,260
Int. Cl.² F23M *9/06*
U.S. Cl. 431—9 **13 Claims**

1. A combustion system adapted to heat an enclosure, said system comprising:

combustion burner means for supplying heat to said enclosure,
first conduit means connected to said burner means for supplying a combustible mixture of an oxidizing gas and fuel to said burner means,
injection means for discharging finely atomized liquid fuel to said first conduit means,
second conduit means between said enclosure and said first conduit means for supplying heated oxidizing gas from said enclosure to said first conduit means adjacent said injection means,
control means for controlling the temperature and quantity of the oxidizing gas supplied from said second conduit means such that the oxidizing gas vaporizes the liquid fuel atomized by the injection means and forms said combustible mixture, and

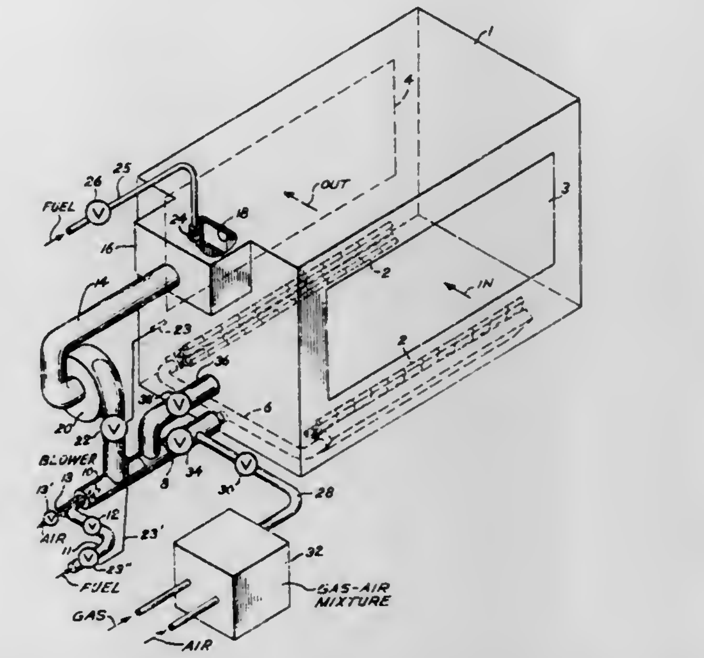

heating means for supplying additional heat to the gas passing from said enclosure to said second conduit means.

4,061,464

PROCESS FOR THE PREPARATION OF DYESTUFF COMPOSITIONS

Manfred Hahnke, Kelkheim, Taunus; Kurt Hohmann, Neu-Isenburg, and Theodor Papenfuhs, Frankfurt am Main, all of Germany, assignors to Hoechst Aktiengesellschaft, Frankfurt am Main, Germany

Continuation of Ser. No. 443,306, Feb. 19, 1974, abandoned. This application Oct. 7, 1975, Ser. No. 620,385
Claims priority, application Germany, Dec. 15, 1973, 2362510
Int. Cl.[2] C09B *67/00*
U.S. Cl. 8—79 2 Claims

1. A process for the preparation of liquid or pasty dyestuff composition containing 10 to 50% by weight of a basic nitro dyestuff which is present in the form of its free dyestuff base and carries a primary, secondary or tertiary amino group or a guanidino or hydrazino group, and containing 50 to 80% by weight of a non-ionic surface-active agent which process comprises synthesizing the dyestuff in the surface-active agent.

4,061,465

CREASABLE DURABLE PRESS TEXTILES FROM METHYLOL REAGENTS AND HALF AMIDES OR HALF SALTS OF DICARBOXYLIC ACIDS

William E. Franklin; John P. Madacsi, and Stanley P. Rowland, all of New Orleans, La., assignors to The United States of America as represented by the Secretary of Agriculture, Washington, D.C.

Filed Apr. 2, 1976, Ser. No. 673,015
Int. Cl.[2] D06M *13/40*
U.S. Cl. 8—185 28 Claims

1. A process for imparting to cellulosic textiles improved properties of resilience, smooth drying, permanent creasability, and acidic character, the process comprising:

a. impregnating a cellulosic fabric with an aqueous solution containing a mixture having a ratio of about from 12:1 to 0:33:1 of a methylol crosslinking reagent and an amic acid of the general structure

$$H_2N-\overset{O}{\overset{\|}{C}}-\left(\begin{array}{c}R\\ |\\ C\\ |\\ R\end{array}\right)_n-\overset{O}{\overset{\|}{C}}-OH$$

where n is 2 or 3 and R is a hydrogen or an alkyl group wherein said R is the same or different from the other R groups, wherein the middle carbon atoms may be joined by a double bond or constitute part of a cyclic structure, and wherein the two functional groups in the same molecule must be able to approach each other closely; and

b. drying and curing the wet impregnated cellulosic fabric at a high temperature.

4,061,466

BIOLOGICALLY ACTIVE COMPOSITION AND THE USE THEREOF

Ingvar Gösta Holger Sjöholm, Tallmovagen 14, S-752 45, Uppsala; Nils Roger Lindmark, Glimmervagen 9 B, S-752 41 Uppsala, and Bo Magnus Ekman, Granitvagen 6 B, S-752 43 Uppsala, all of Sweden

Filed Oct. 14, 1975, Ser. No. 621,888
Claims priority, application Sweden, Oct. 16, 1974, 7412990; Oct. 16, 1974, 7412992; Oct. 16, 1974, 7412993
Int. Cl.[2] G01N *33/16, 31/14*
U.S. Cl. 23—230 B 11 Claims

4. A process for carrying out a bioassay for quantitatively determining a particular substance in a biological sample comprising adding to said sample a reagent comprising of a biologically active composition comprising

a. microporous, spherical particles in gel form, said particles having a three-dimensional polymeric network, diameters less than 10 μm and an average diameter of from 0.5 to 4 μm and

b. a biologically active macromolecular substance immobilized within the meshes of said polymeric network but retaining its biological activity, said biologically active macromolecular substance being specific to said particular substance.

4,061,467

PROCESS AND APPARATUS FOR THE REMOVAL OF SAMPLES FOR ANALYSERS FROM A STREAM OF EXHAUST GAS

Wolf-Jürgen Becker; Wolfram Breuer, and Klaus Siemer, all of Leverkusen, Germany, assignors to Bayer Aktiengesellschaft, Leverkusen, Germany

Filed Sept. 26, 1975, Ser. No. 617,219
Claims priority, application Germany, Sept. 28, 1974, 2446404
Int. Cl.[2] G01N *1/22*
U.S. Cl. 23—232 R 4 Claims

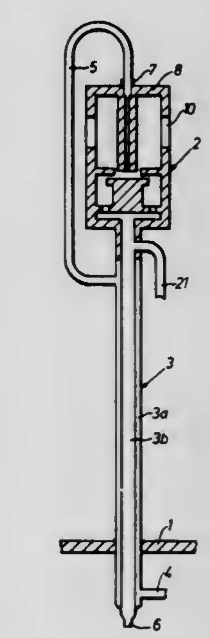

1. A method for the removal of samples for the purpose of analysis from a stream of exhaust gas, wherein the stream of exhaust gas is diluted with a carrier gas which is free from the gas to be analysed before the sample is removed from the stream of exhaust gas.

4,061,468

STABLE TEST STRIPS HAVING A WATER-SOLUBLE PAPER LAYER AND METHODS FOR MAKING SAME

Hans Lange, Lampertheim; Walter Rittersdorf; Hans-Georg Rey, both of Mannheim-Waldhof; Wolfgang Werner, Mannheim-Vogelstang, and Peter Rieckmann, Mannheim-Waldhof, all of Germany, assignors to Boehringer Mannheim GmbH, Mannheim-Waldhof, Germany

Filed July 1, 1975, Ser. No. 592,295
Claims priority, application Germany, July 30, 1974, 2436598
Int. Cl.[2] G01N *31/22, 33/16*
U.S. Cl. 23—253 TP 13 Claims

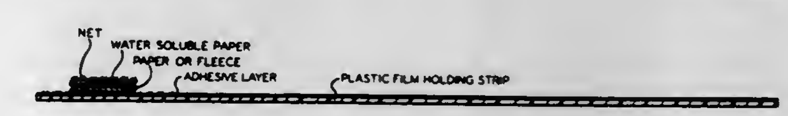

1. Stable test strip for the detection of a component in an aqueous liquid comprising two indicator layers containing at least one reagent in each layer, said reagents forming, upon contact with the liquid containing said component, a color detectable throughout said strip, wherein one of said indicator layers is a water soluble paper.

13. Process for the production of stable test strips for the detection of component materials in an aqueous liquid, which comprises impregnating two indicator layers individually, each with at least one detection reagent, one of said indicator layers

being a water-soluble paper, drying said layers and uniting same to form said test strip.

4,061,469

CALIBRATION IN A BLOOD ANALYZER

Charles Ray DuBose, Stafford, Tex., assignor to Hycel, Inc., Houston, Tex.

Filed Dec. 8, 1975, Ser. No. 638,472

Claims priority, application United Kingdom, Dec. 6, 1974, 52815/74; Dec. 6, 1974, 52810/74; Dec. 6, 1974, 52811/74; Dec. 6, 1974, 52812/74; Dec. 6, 1974, 52813/74; Dec. 6, 1974, 52814/74

Int. Cl.[2] G01N *33/16, 21/24*

U.S. Cl. 23—253 R **10 Claims**

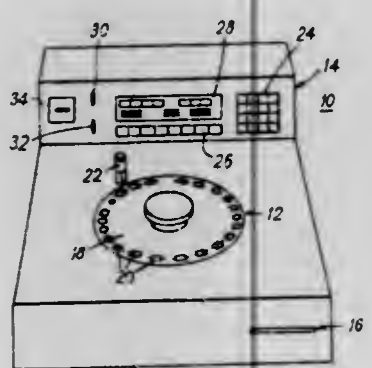

1. In a spectrophotometric measuring system for analyzing the concentration of a substance in a sample as a function of optical density of the sample, calibration means comprising first and second photodetectors positioned for respectively receiving radiant energy of a source and radiant energy applied from the source through a sample; ratio means connected to said photodetectors for providing an output as a function of the ratio of the outputs of said first and second detectors; a programmable voltage source; summing amplifier means having outputs from said ratio circuit and from said programmable voltage source coupled thereto for summing the outputs thereof, measuring means for measuring an output indicative of the output of said summing amplifier; a progammable gain amplifier coupled between said programmable voltage source and said measuring means; control means connected to said measuring means, and providing outputs coupled to program said programmable voltage source and said programmable gain amplifier; blank mode selection means for selection in correspondence with placing of a blank sample between said source and said second photodetector for connecting said control means for setting gain of said programmable gain amplifier at a preselected level and for providing a programming signal to said programmable voltage source; said control means further comprising blank level means for providing a value indicative of a desired blank level; means for comparing the output of said summing means to the output of said blank level means and for providing the programming signal to reduce the error between the value and the output of said summing means below a predetermined level, and means for holding and applying said programming signal to said programmable voltage source in an operate mode in which an unknown sample is placed between the source and said second photodetector.

4,061,470

BLOOD OXYGENATOR UTILIZING A REMOVABLE MEMBRANE OXYGENATOR UNIT

Ronald J. Leonard, Elk Grove Village, Ill., assignor to Baxter Travenol Laboratories, Inc., Deerfield, Ill.

Continuation of Ser. No. 622,184, Oct. 14, 1975, abandoned, which is a division of Ser. No. 435,143, Jan. 14, 1974, Pat. No. 3,929,414. This application Oct. 27, 1976, Ser. No. 735,863

Int. Cl.[2] A61M *1/03*

U.S. Cl. 23—258.5 M **6 Claims**

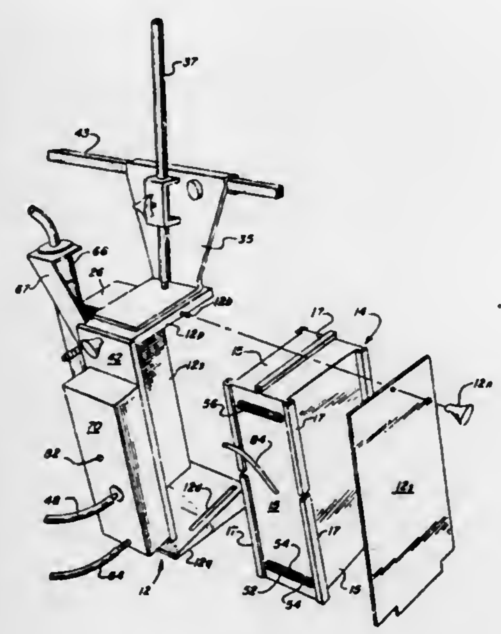

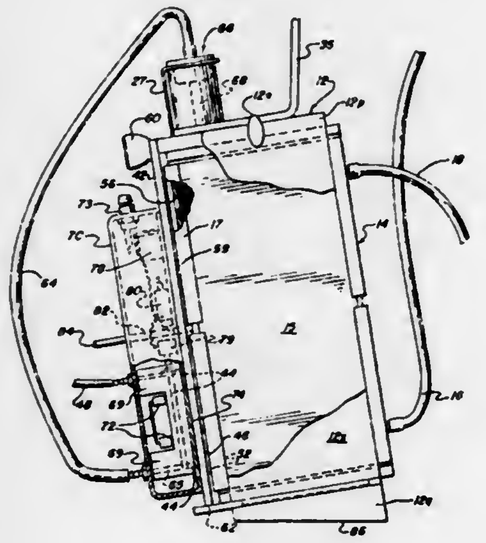

1. A blood oxygenator defining a blood flow path and an oxygen flow path in a manner which allows the blood flowing therethrough to be oxygenated comprising: a membrane defining an interface between the oxygen flow path and the blood flow path; a housing for holding said membrane, said housing defining said blood flow path on one side of the membrane and the oxygen flow path on the other side of the membrane, said blood and oxygen flow paths being sealed from one another, said housing defining inlets and outlets for each of said oxygen and said blood flow paths; a bracket means for removably engaging and holding said housing in a predetermined disposition, said bracket means further comprising a means for at least partially shielding said oxygen outlet from external obstruction and for dispersing oxygen passing from the oxygen outlet of said housing into a plurality of directions to prevent accidental obstruction of said outlet.

4,061,471

MOLTEN SALT LIFT GAS SYSTEM FOR PRODUCTION OF CHLORINATED HYDROCARBONS

Morgan C. Sze, Upper Montclair, N.J., assignor to The Lummus Company, Bloomfield, N.J.

Filed Nov. 19, 1975, Ser. No. 633,491

Int. Cl.[2] B01J *8/12, 8/18, 8/26;* **C07C** *21/02*

U.S. Cl. 23—260 **2 Claims**

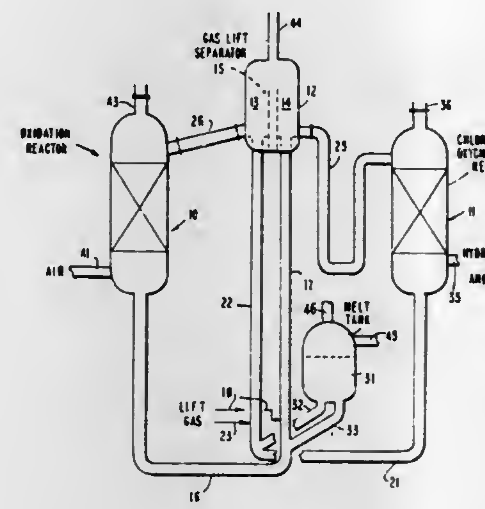

1. An apparatus for producing chlorinated hydrocarbons by the use of molten salts, comprising:

an oxidation reactor including an inlet and outlet for oxidizing molten salts;

a chlorinated hydrocarbon production reactor including an inlet and outlet for producing chlorinated hydrocarbons;

a first lift gas separating means;

a first lift gas pipe connecting the lower portion of the oxidation reactor with the first lift gas separating means, said first lift gas pipe including means for introducing a lift gas therein for passing molten salt from the oxidation reactor to the first lift gas separating means;

a second lift gas separating means;

a second lift gas pipe connecting the lower portion of the chlorinated hydrocarbon production reactor with the second lift gas separating means, said second lift gas pipe including means for introducing a lift gas therein for passing molten salt from the chlorinated hydrocarbon reactor to the second lift gas separating means;

first pipe means connecting the first lift gas separating means with an upper portion of the chlorinated hydrocarbon production reactor for passing molten salt from the first lift gas separating means into the chlorinated hydrocarbon production reactor;

a second pipe means for connecting the second lift gas separating means with an upper portion of the oxidation reactor for passing molten salt from the second lift gas separating means into the oxidation reactor; and

a pressurized melt storage tank, including a third pipe means connecting the pressurized melt storage tank with the bottom of the first lift gas pipe, a fourth pipe means connecting the pressurized melt storage tank with the bottom of the second lift gas pipe, and means for introducing and withdrawing a gas under pressure to control the pressure in the melt storage tank and thereby control the flow rates of the molten salt, and normally prevent flow of molten salt between the melt storage tank and the first and second lift gas pipes.

4,061,472

PROCESS FOR PRODUCING SYNTHETIC CAKING COAL AND BINDER PITCH

Hiromi Ozaki, Urawa; Mamoru Yamane, Kiyose; Hachio Kodama, Toda, and Haruo Yoshika, Hoya, all of Japan, assignors to Nippon Mining Co., Ltd., Tokyo, Japan

Continuation-in-part of Ser. No. 455,363, March 27, 1974, abandoned. This application July 25, 1975, Ser. No. 599,085

Claims priority, application Japan, Mar. 27, 1973, 48-34066; Apr. 10, 1973, 48-40049; Apr. 26, 1973, 48-46687; Oct. 6, 1973, 49-111951

Int. Cl.[2] C10L *9/04;* **C10C** *1/00, 3/00*

U.S. Cl. 44—1 R **6 Claims**

1. A raw synthetic caking coal prepared by thermally cracking a heavy hydrocarbon selected from the group consisting of petroleum atmospheric oil, vacuum residual oil, cracked residual oil, catalytically cracked oil, and propane asphalt at a temperature of from 380° to 500° C, which composition is characterized by a volatile matter content of from 25.2 to 60.7 percent, an atomic ratio of H/C of 0.60 to about 1.20 and a maximum fluidity greater than 40 ddpm.

5. A synthetic caking coal is which is useful as a raw material in the production of metallurgical coke which is characterized by volatile matter content of 21.9 39.6% H/C (atomic ratio) of 0.60 - 0.75 a maximum fluidity above 40 ddpm and a free-swelling index of greater than 3 which is produced by stripping the raw synthetic caking coal of claim 1 with steam or a light hydrocarbon.

4,061,473

PROCESS TO EMBODY WASTE AUTOMOTIVE LUBRICATING OILS INTO A FUEL ADDITIVE TO REDUCE CORROSION AND DEPOSITS AND AUGMENT ENERGY AVAILABILITY

Robert S. Norris, 72 Pondfield Road West, Apt. 1-F, Bronxville, N.Y. 10708

Filed Aug. 21, 1975, Ser. No. 606,710

Int. Cl.[2] C10L *1/32*

U.S. Cl. 44—51 **16 Claims**

1. A process of preparing a fuel oil additive comprising emulsifying a waste lubricating oil containing petroleum sulfonate detergent with an aqueous solution of a water soluble salt of an element selected from the group consisting of aluminum, barium, boron, calcium, chromium, copper, magnesium, manganese, samarium, silicon, tin and zinc.

4,061,474

PHENOXIDE-HALO CARBOXYLIC ACID CONDENSATE ADDITIVES FOR FUELS

Thomas Frier Steckel, Chagrin Falls, Ohio, assignor to The Lubrizol Corporation, Cleveland, Ohio

Filed Aug. 27, 1975, Ser. No. 608,291

Int. Cl.[2] C10L *1/18, 1/32, 1/22;* **C10M** *1/54*

U.S. Cl. 44—66 **12 Claims**

1. A normally liquid fuel composition comprising a major amount of a normally liquid fuel and about 1-10,000 parts per million parts by weight of fuel of a product made by reacting at least one (I) metal phenoxide substituted with at least one hydrocarbon group of at least about 30 carbon atoms with (II) a carboxylic acid reagent containing from 1 to 3 Cox groups and a halogen-substituted hydrocarbon aliphatic or alicyclic group, the ratio of equivalents of acid reagent to equivalents of phenoxide ranging between about 1:5 to about 5:1, wherein each Cox independently represents a member selected from the group consisting of a carboxylate of a Group IA metal, a carboxylic ester of a lower alkanol, a carboxamide of lower alkyl monoamines or ammonia, and a carboxylate of a lower alkyl monoamine or ammonia.

4,061,475

PROCESS FOR PRODUCING A GAS WHICH CAN BE SUBSTITUTED FOR NATURAL GAS

Friedrich-Wilhelm Moller, Friedrichsdorf; Karl Bratzler, Bad Homburg, and Wolf-Dieter Müller, Nieder-Eschbach, all of Germany, assignors to Metallgesellschaft Aktiengesellschaft, Frankfurt am Main, Germany

Continuation of Ser. No. 592,301, July 1, 1975, abandoned. This application Feb. 28, 1977, Ser. No. 773,109

Claims priority, application Germany, July 9, 1974, 2432887

Int. Cl.² C10J *3/00;* **C10K** *3/02*

U.S. Cl. 48—197 R **2 Claims**

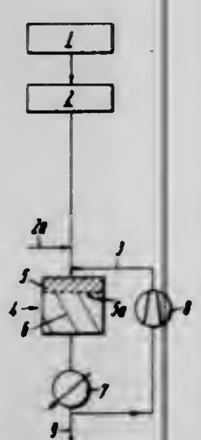

1. A process for producing a high-methane gas which can be substituted for natural gas, from a primary gas containing 35–44% by volume hydrogen, 15–20% by volume carbon monoxide and 28–32% by volume carbon dioxide produced by the gasification of coal with water vapor and oxygen under a pressure of 20–80 kg/cm² comprising the steps of:

a. purifying said primary gas by removing catalyst poisons and removing carbon dioxide to a residual content below 2% by volume;

b. adjusting the water vapor to carbon monoxide volume ratio of the scrubbed gas to 0.55 : 1 to 1 : 1;

c. passing said gas of step (b) through one reaction zone containing only a methanation catalyst containing 20–60% by weight of nickel on a support which is resistant to water vapor, the temperature of the gas entering said reaction zone being in the range of 300°–500° C and the temperature of the gas leaving the methanation catalyst being below 480° C;

d. supplying the gas leaving the reaction zone to a final methanation stage to produce a high-methane gas; and

e. removing residual carbon dioxide from said high-methane gas to produce said gas to be substituted for natural gas.

4,061,476

GAS PURIFICATION METHOD AND APPARATUS

Heinz Hölter, Gladbeck; Heinz Gresch, Dormund-Derne, and Heinrich Igelbüscher, Gladbeck, all of Germany, assignors to Heinz Holter, Gladbeck, Germany

Filed May 4, 1976, Ser. No. 683,205

Claims priority, application Germany, May 6, 1975, 2520045; Dec. 9, 1975, 2555220; Mar. 4, 1976, 2608935; Apr. 10, 1976, 2615828

Int. Cl.² B01D *53/06*

U.S. Cl. 55—77 **33 Claims**

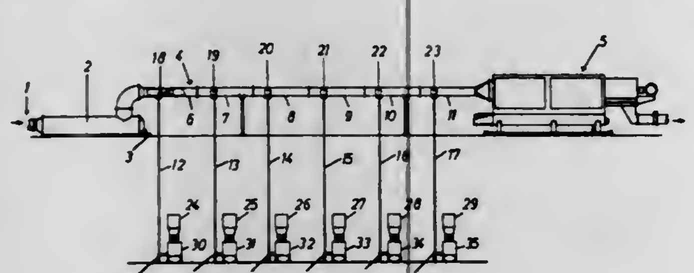

1. In a gas purification method wherein gas, containing at least one contaminant and/or noxious component, is contacted with a solid sorption agent which selectively attracts the contaminant and/or noxious component and is subsequently separated from the solid sorption agent, the improvement comprising introducing the solid sorption agent, in purverulent form, into the flowing stream of the gas and then subjecting such stream, containing the solid sorption agent, to intense turbulence, by diverting the stream outwardly by a cone and then inwardly by a frusto-conical ring, before separating the solid sorption agent therefrom.

4,061,477

METHOD AND APPARATUS FOR THE PURIFICATION OF WASTE GAS CONTAINING GASEOUS POLLUTANTS

Heiichiro Murakami, and Tsuneo Okamoto, both of Iwaki, Japan, assignors to Taiyo Kaken Company, Ltd., Tokyo, Japan

Continuation-in-part of Ser. No. 659,901, Feb. 20, 1976, Pat. No. 4,047,906. This application Jan. 4, 1977, Ser. No. 756,650

Claims priority, application Japan, Feb. 27, 1975, 50-24262

The portion of the term of this patent subsequent to Sept. 13, 1994, has been disclaimed.

Int. Cl.² B01D *53/12*

U.S. Cl. 55—79 **15 Claims**

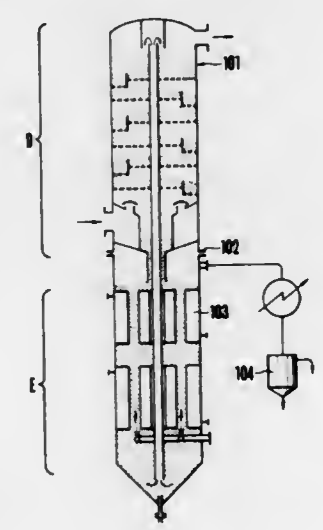

1. A method for the continuous purification of a waste gas containing gaseous pollutants comprising:

providing a tower containing a plurality of vertically spaced, perforated trays, each tray having a single weir, extending horizontally along a substantially straight line, provided on its upper surface disposed to divide its surface area into a first section having a plurality of apertures and constituting 80–95% of the total surface area of the tray and a second section having a plurality of apertures and constituting 5–20% of the total surface area of the tray, the location of the weirs on the various trays alternating from side to side in the tower;

continuously introducing said waste gas upwardly into a lower section of said tower and at the same time continuously introducing activated carbon spheres into an upper section of the tower for contact with said waste gas thereby forming a fluidizedbed on said first section of each of said trays; and

continuously removing purified gas from the top of said tower.

8. A chemical process column containing a plurality of vertically-spaced perforated trays, each of said trays have a single weir, extending horizontally along a substantially straight line, provided on its upper surface to divide its upper surface into first and second sections, each of said tray sections having a plurality of perforations, and said first tray section having a surface area constituting 80 to 95% of the total tray surface area.

4,061,478

SELF-CLEANING SMOKE FILTER

George J. Hartwick, 3733 N. Sheridan Road, Waukegan, Ill. 60085

Continuation-in-part of Ser. No. 484,285, June 28, 1974, abandoned. This application May 28, 1975, Ser. No. 581,531

Int. Cl.² B01D *47/06*

U.S. Cl. 55—257 PV **18 Claims**

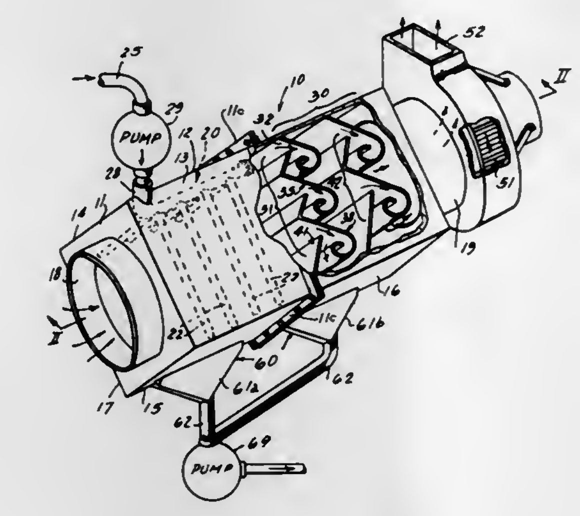

1. A channel for removing contaminants from gases having an input port adapted to receive said gases, and an exit port adapted to expel said gases; said channel comprising

a first pair of adjacent longitudinal sides forming a V-shaped bottom portion in said channel, and a second pair of adjacent longitudinal sides forming an inverted V-shaped top portion in said channel;

liquid dispensing means disposed between said input port and said exit port for subjecting said gases to a liquid stream to wet said contaminants;

baffle means disposed within said channel between said liquid dispensing means and said exit port for simultaneously passing said gases to said exit port and trapping said wet contaminants; said baffle means defining downwardly extending gutter means for carrying said wet contaminants trapped by said baffle means toward said bottom portion of said channel; said baffle means having a first row comprising: a first baffle having a straight section extending from one of said longitudinal sides comprising said top portion, and a first curled section looping back relative to said straight section; a second baffle having a first L-shaped section in spaced relationship from said curled section, and a second curled section looping back relative to said first L-shaped section; a third baffle having a second L-shaped section in spaced relationship from said second curled section, and a third curled section looping back relative to said second L-shaped section; and a fourth baffle comprising an end section extending from the other longitudinal side comprising said top portion;

trough means, secured to one of said first pair of adjacent sides, cooperating with said gutter means for receiving said contaminants; and

drain means, disposed in said bottom portion, cooperating with said trough means for carrying off said contaminants, thereby preventing buildup of said contaminants inside said channel.

4,061,479

APPARATUS FOR AND METHOD OF SEPARATING DROPLETS OF A LIQUID FROM A GAS

Heinz Hölter, and Heinrich Igelbuscher, both of Gladbeck, Germany, assignors to Heinz Holter, Gladbeck, Germany

Filed Nov. 26, 1976, Ser. No. 745,304

Claims priority, application Germany, Nov. 29, 1975, 2553856; May 29, 1976, 2624187

Int. Cl.² B01D *47/00*

U.S. Cl. 55—257 C **7 Claims**

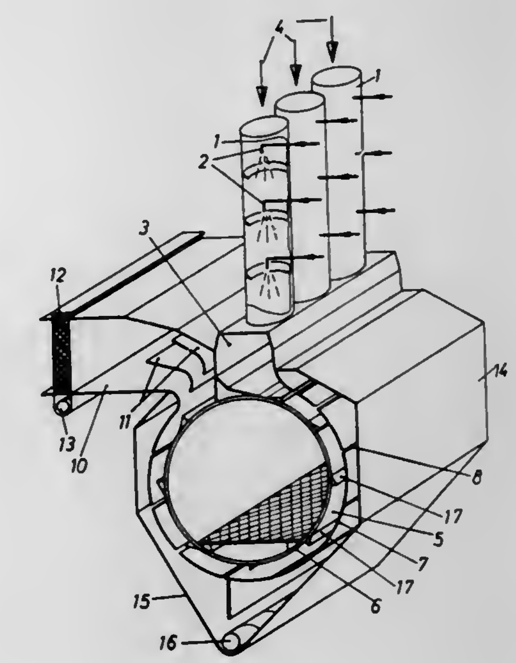

1. Apparatus for separating liquid droplets from a gas, comprising an elongate cylindrical chamber having a generally horizontal axis and including a continuous interior wall and a closely spaced coaxial continuous exterior wall, the exterior wall having annularly spaced longitudinal slits substantially parallel to the chamber axis through which liquid carried by the gas may pass out as the gas flows around the chamber, elongated inlet and outlet manifolds annularly spaced apart along the circumference of said chamber, each said manifold having an opening into said chamber of approximately the cross sectional area of the chamber and smaller than the cross section of the manifold and extending along substantially the entire length of and parallel to the chamber axis, a plurality of inlet ducts, for gas under pressure, having axes radial to said chamber and connected to said inlet manifold one after another substantially its full length, each of said ducts housing spray jet means for mixing wash water with incoming gas, and baffle means in said inlet manifold for changing the direction of flow of the incoming gas from a direction radial of the chamber to a direction tangential to the chamber as the incoming gas enters the chamber through said opening in the inlet manifold, whereby incoming gas under pressure mixed with wash water will flow through the inlet ducts into the inlet manifold, strike the baffle means and change from radial direction to enter the chamber tangentially through the inlet manifold opening, flow circumferentially around the chamber in a stream of greater velocity having no stratification and little or no movement longitudinally of the chamber, while liquid droplets are efficiently separated from the stream through said slits, and finally emerge from the chamber through the outlet manifold.

4,061,480
VACUUM CLEANER FOR RADIOACTIVELY CONTAMINATED PARTICLES

Burton L. Frye, Napa, Calif.; Max G. Pittman, Kahlotus, Wash.; David A. Runge; Lawrence C. Souza, both of Petaluma, Calif., and Raymond V. LaVole, Sonoma, Calif., assignors to The United States of America as represented by the Secretary of the Navy, Washington, D.C.

Filed May 20, 1976, Ser. No. 688,456
Int. Cl.[2] B01D 50/00

U.S. Cl. 55—356 9 Claims

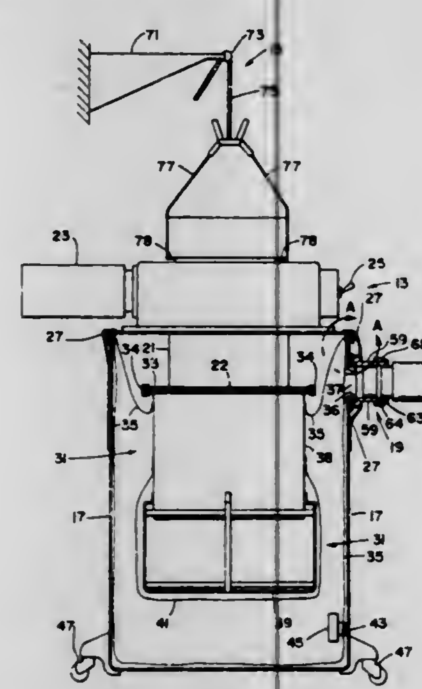

1. A vacuum cleaner for removing radioactive particles from the surface of an object comprising:
   a. an upper housing having an exhaust port;
   b. a lower housing having an input port;
   c. means for sealably connecting said upper housing to said lower housing in an airtight manner;
   d. a suction means, having an intake opening and an exhaust opening connected to said exhaust port, for creating a local pressure differential, said suction means being fixedly contained in said upper housing;
   e. a filter container having two openings and containing a material capable of filtering very fine particles, one opening of said container being removably attached to said intake opening of said suction means;
   f. a retainer of a flexible material located in said lower housing, said retainer having a central opening, a fold concentric with said central opening, and a port opening, said central opening being attached annularly to the side of said filter container in an airtight manner such that the second opening of said filter container is enclosed by said retainer, said port opening being removably attached in an airtight manner peripherally to said input port of said lower housing, and said fold being peripherally held by the interface of said upper and said lower housings;

whereby ambient air containing radioactive particles enters said retainer through said port opening and is filtered by said filter container so that the radioactive particles are retained in said retainer without contaminating said vacuum cleaner.

4,061,481
NATURAL GAS PROCESSING

Roy E. Campbell; John B. Lawrence, and Ronald Ray Tonne, all of Midland, Tex., assignors to The Ortloff Corporation, Midland, Tex.

Continuation of Ser. No. 516,993, Oct. 22, 1974, abandoned. This application Sept. 15, 1976, Ser. No. 723,513
Int. Cl.[2] F25J 3/02

U.S. Cl. 62—29 10 Claims

1. In a process for obtaining a liquified fraction from a main stream of gas containing hydrocarbons selected from the group consisting of natural gas, refinery gas streams, and synthetic gas streams obtained from coal, crude oil, naphtha, oil shale, tar sands, and lignite which comprises the steps of
   a. removing carbon dioxide, sulfur-containing gases, and other undesirable contaminants;
   b. dehydrating the gas stream;
   c. expanding said gas stream to a pressure lower than the previously existing pressure while extracting energy from the gas to provide a stream comprising gas and liquid portions; and
   d. separating the resulting cold stream into residue gas and liquid portions,

the improvement consisting in the steps of:
   1. expanding said gas stream in step (c) in at least two separate stages, each expansion stage being conducted at pressure-temperature conditions which cause hydrocarbons to condense;
   2. directing the gas stream flowing from the first of said expansion stages to a condensed liquid separator where condensed liquid is separated and carried to a demethanizer;
   3. directing the gas portion of the stream after separation in step (2) above into two vapor streams for further cooling, one of said streams flowing in heat exchange relationship with residue gas of lower temperature and the other of said streams flowing in heat exchange relationship with demethanizer liquid of lower temperature;
   4. recombining the thus-cooled streams;
   5. separating the liquid condensed by said further cooling step;

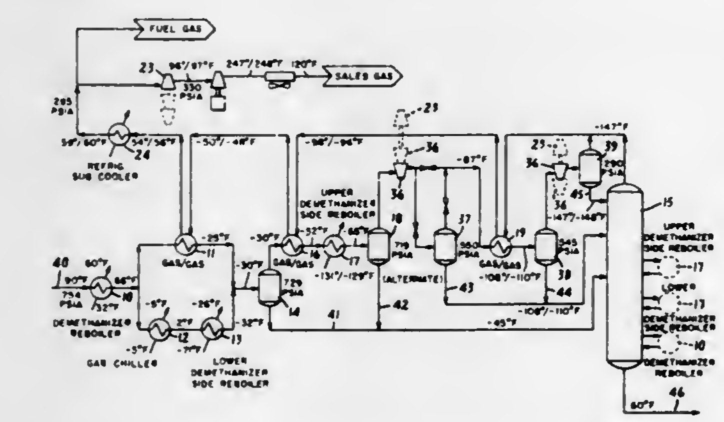

   6. carrying the condensed liquid to a demethanizer;
   7. directing the gas portion of the stream obtained in (5) above to the next expansion stage;
   8. separating the stream leaving the said next expansion stage into gas and liquid portions;
   9. directing the gas portion, from the separation following said next expansion stage, together with discharge gas from the demethanizer, into heat exchange relationship with at least one of the two vapor streams in (3) above; and
   10. directing the liquid portion obtained in (8) above to a demethanizer.

2. In a process for separating a feed gas into a liquid product portion and a residue gas, said feed gas containing hydrocarbons and having methane and ethane as its major components, said process including the steps of
   a. cooling said feed gas under substantially constant pressure;
   b. expanding at least a portion of said cooled gas stream to a lower pressure while extracting energy from said gas portion to provide a partially condensed cold stream; and
   c. treating at least the resulting partially condensed cold stream in a distillation column at said lower pressure to obtain said liquid product portion,

the improvement wherein said gas stream portion is expanded in step (b) in at least two separate stages by a process wherein
   1. said portion of said cooled gas stream under pressure (a) is expanded in a first expansion means to an intermediate pressure while extracting energy from the gas, the outlet conditions of temperature and pressure in said first expansion stage being effective to cause the expanded feed gas portion to partially condense;
   2. further cooling at least the gas remaining from said partial condensation immediately following said expansion in step (1) at a substantially constant pressure at said intermediate pressure;
   3. separating said further cooled gas into a first vapor fraction at intermediate pressure and a first liquid fraction;
   4. further expanding said first vapor fraction at said intermediate pressure in a second expansion stage, the outlet conditions of temperature and pressure in said second expansion stage being effective to cause hydrocarbons in the expanded vapor fraction to partially condense into a second gas and liquid portion;
   5. separating said second liquid portion following said second expansion stage; and
   6. thereafter treating said first and second liquid fractions in said distillation column (c) at said lower pressure.

10. In an apparatus for separating a feed gas into a liquid product portion and residue gas, said feed gas containing hydrocarbons and having methane and ethane as its major components, said apparatus including
   a. means for cooling said feed gas under pressure at a substantially constant pressure;
   b. expansion means connected to said cooling means to receive at least a portion of said cooled feed gas under pressure and to expand said gas portion to a lower pressure while extracting energy therefrom, said expansion means being adapted to partially condense said gas portion and to provide a cold gas stream; and
   c. distillation means connected to said expansion means for receiving at least said partly condensed cold gas stream at said lower pressure, said distillation means being adapted to produce said liquid product portion,

the improvement wherein said expansion means (b) comprises
   1. a first expansion means for expanding said gas stream portion to a pressure intermediate between the pressure of said feed gas and said lower pressure while extracting energy from the gas, said first expansion means being adapted to provide outlet conditions of temperature and pressure effective to cause hydrocarbons to partially condense from the gas stream portion at said intermediate pressure;
   2. further cooling means connected directly to receive at least the gas remaining in said partially condensed feed stream from said first expansion means for further cooling the stream flowing from said first expansion means at a substantially constant pressure;
   3. separation means connected to said further cooling means to receive the partially expanded and further cooled gas stream at said intermediate pressure and to separate it into a first liquid portion and first vapor portion;
   4. a second expansion means connected to said separation means to receive said first vapor portion and to further expand it while extracting energy therefrom, said second expansion means being adapted to provide outlet conditions of temperature and pressure effective to cause hydrocarbons to partially condense from the further expanded gas stream;
   5. separation means for removing a second liquid portion from the further expanded gas following said second expansion stage; and
   6. means to receive said first and second liquid portions and supply them to said distillation column (c) at said lower pressure.

4,061,482
COOLING COIL AND AIR DISTRIBUTION SYSTEM DEFROST MEANS

Robert Smith, Dayton, Ohio, assignor to General Motors Corporation, Detroit, Mich.

Filed Nov. 29, 1976, Ser. No. 745,551
Int. Cl.[2] F25D 21/08

U.S. Cl. 62—155 3 Claims

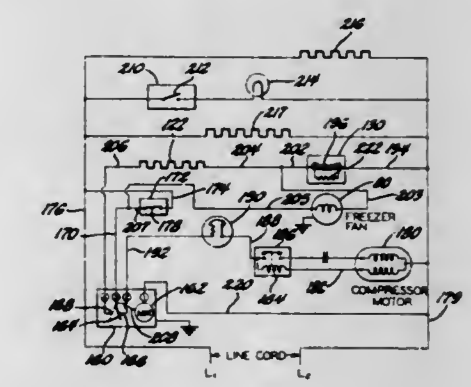

1. In combination, a refrigerator cabinet having an insulated above-freezing food storage compartment and a freezer food storage compartment therein, an evaporator compartment separated from said compartments, a source of electrical power, an evaporator in said evaporator compartment, a fan for circulating air via inlet conduit means from the food storage compartments in thermal exchange relationship past said evaporator, exit conduit means for returning the cooled air from said evaporator compartment to said food storage compartments, a compressor for supplying liquid refrigerant to said evaporator, an electrical defrost heater for periodically warming said evaporator to defrost temperatures, a defrost thermostat switch in said evaporator compartment for limiting the duration of the defrost periods, a temperature responsive cold control switch for energizing said compressor, a defrost timer switch for periodically energizing said heater defrosting said evaporator, said defrost timer means including a switch for selectively energizing either said compressor or said electric defrost heater means, the improvement wherein means for supporting said defrost thermostat for sensing the flow of air leaving said evaporator compartment, a control circuit electrically connecting one side of said defrost thermostat to one side of said power source and the other side of said defrost thermostat with one side of said defrost heater, said defrost heater means having its other side connected to a first fixed contact of said defrost timer switch, said circuit means connecting one side of said fan with said other side of said defrost thermostat, said circuit means connecting the other side of said fan with a movable contact of said defrost timer switch, said defrost timer movable contact connected by said circuit control means through said cold control switch to the other side of said power source, a second fixed contact of said defrost timer connected by said circuit control through said compressor motor to said one side of said power source, whereby said fan is energized in unison with said defrost heater upon said defrost timer movable contact being moved into contact with said first fixed contact to start a defrost cycle, and whereby upon said defrost thermostat sensing an above-freezing temperature of air leaving said evaporator compartment after frost on said evaporator has melted said defrost thermostat deenergizes said defrost heater and said fan, said control circuit causing said fan to remain deenergized until said defrost thermostat senses a below-freezing temperature of air leaving said evaporator compartment after moisture remaining on said evaporator has been refrozen after defrost, thereby resulting in a minimum of moisture laden cooled air being circulated through said exit conduit means to obviate accumulated frost buildup therein and whereby the run time for said fan is minimized.

4,061,483

LOW TEMPERATURE HYPOBARIC STORAGE OF METABOLICALLY ACTIVE MATTER

Stanley P. Burg, Miami, Fla., assignor to Grumman Allied Industries Inc., Garden City, N.Y.

Division of Ser. No. 500,449, Aug. 26, 1974, Pat. No. 3,958,028, which is a continuation-in-part of Ser. No. 245,886, April 20, 1972, abandoned. This application Mar. 22, 1976, Ser. No. 669,167

Int. Cl.[2] F25B *19/00*

U.S. Cl. 62—268 **38 Claims**

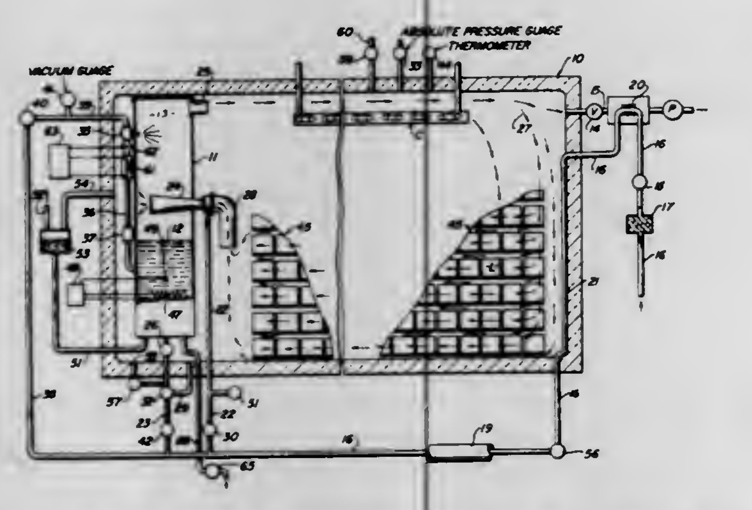

1. Storage apparatus comprising an enclosed space, with walls constructed to withstand the force of a vacuum and adapted to receive and preserve metabolically active matter stored therein, means for evacuating said space, refrigeration means for maintaining a selected temperature within said space, means for admitting fresh air at a restricted rate into said space when said evacuating means withdraws air therefrom and maintaining a flow of air through said space, water-humidifying means for humidifying said moving air, and means for maintaining the temperature of the water for said humidifying means not detrimentally less than the temperature of air in said space and maintaining a desired relative humidity in said space.

4,061,484

PROCESS FOR PRODUCING GRADIENT FIBERS

Hubert Aulich, Munich, and Josef Grabmaier, Kempfenhausen, both of Germany, assignors to Siemens Aktiengesellschaft, Berlin & Munich, Germany

Filed Mar. 30, 1977, Ser. No. 782,951

Claims priority, application Germany, Apr. 4, 1976, 2614631

Int. Cl.[2] C03B *37/00*

U.S. Cl. 65—2 **7 Claims**

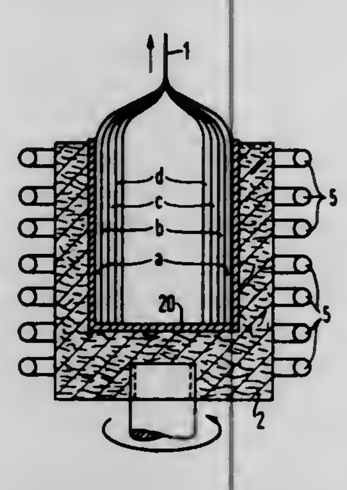

1. A process for producing a gradient glass fiber having a changing index of refraction radially comprising the steps of

A. introducing successively into the rotating, cylindrically-walled heated melting crucible a plurality of glass masses which differ from one another progressively as respects respective indices of refraction thereof, the glass mass introduced initially having the smallest index of refraction of said plurality and the glass mass introduced last having the greatest refractive index of said plurality, so that each individual such glass mass forms a successive cylindrical layer on said cylindrical crucible walls, and

B. pulling a glass fiber having a radially changing index of refraction from the resulting heated cylindrically layered glass structure.

4,061,485

METHOD OF AND APPARATUS FOR CONTROLLING THE DISTRIBUTION OF FIBERS ON A RECEIVING SURFACE

Carl F. Rimmel, Newark, Ohio, assignor to Owens-Corning Fiberglas Corporation, Toledo, Ohio

Continuation of Ser. No. 582,464, May 30, 1975, abandoned. This application Oct. 27, 1976, Ser. No. 736,013

Int. Cl.[2] C03B *37/04*

U.S. Cl. 65—4 R **21 Claims**

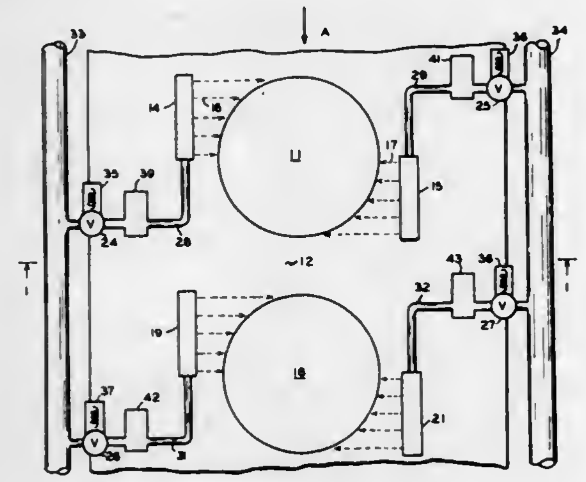

3. In apparatus for forming glass fibers wherein said fibers are projected as a hollow tubular formation from the forming means toward a collecting surface, said formation being distributed upon the collecting surface through the interaction of said veil and intersecting on-off pulsating jets of gas the improvement comprising adjustable control means for independently controlling the cycle frequency and the ratio of the on to off periods during a cycle.

4,061,486

PROCESS FOR THE MANUFACTURE OF OPTICAL BODIES WITH REFRACTIVE INDEX GRADIENTS

Walter Jahn, Ingelheim, Germany, assignor to JENAer Glaswerk, Schott & Gen., Mainz, Germany

Filed Feb. 19, 1976, Ser. No. 659,258

Claims priority, application Germany, Feb. 19, 1975, 2507069

Int. Cl.[2] C03B *23/20;* **C03C** *15/00*

U.S. Cl. 65—18 **6 Claims**

4. A process for producing a transparent optical-glass body having a linear index of refraction gradient, said process comprising the steps of:

I. pressing particles of optical glass to form a self-supporting porous body of optical glass of the following composition by weight percent:

SiO_2	10 to 50
R_2O	2 to 30
B_2O_3	0 to 5
Al_2O_3	0 to 5
PbO	balance to make 100%

wherein R is an alkali metal,

II. sintering the body without substantially reducing the porosity,

III. applying a temperature gradient to change continuously the pore distribution,

IV. immersing the body into a penetrating medium, and

V. heating the porous optical-glass body to a temperature of 550°–700° C to eliminate the pores and give a transparent optical glass body having an index of refraction gradient such that the part of the glass with a higher temperature has a lower index of refraction than the part of the glass with a lower temperature.

5. A process for producing a transparent optical-glass body having an index of refraction gradient, said process comprising the steps of:

I. pressing particles of optical glass to form a self-supporting porous body of optical glass of the following composition by weight percent:

SiO_2	10 to 50
R_2O	2 to 30
B_2O_3	0 to 5
Al_2O_3	0 to 5
PbO	balance to make 100%

wherein R is an alkali metal,

II. leaching a first portion of the R_2O from a first part of the porous body and leaching a second portion of the R_2O from a second part of the porous optical-glass body,

wherein the first portion R_2O leached is greater than the second portion of R_2O leached;

III. heating the porous optical-glass body to a temperature of 550° to 700° C to eliminate the pores and give a transparent optical-glass body having an index of refraction gradient such that the index of refraction is greater in the second part of the glass body than the index of refraction in the first part.

4,061,487

PROCESS FOR PRODUCING GLASS IN A ROTARY FURNACE

Kazuo Kiyonaga, Tarrytown, N.Y., assignor to Union Carbide Corporation, New York, N.Y.

Continuation-in-part of Ser. No. 701,677, July 1, 1976, abandoned, which is a continuation of Ser. No. 519,188, Oct. 30, 1974, abandoned. This application Dec. 16, 1976, Ser. No. 751,196

Int. Cl.[2] C03B *5/16;* **F27B** *14/00*

U.S. Cl. 65—135 **12 Claims**

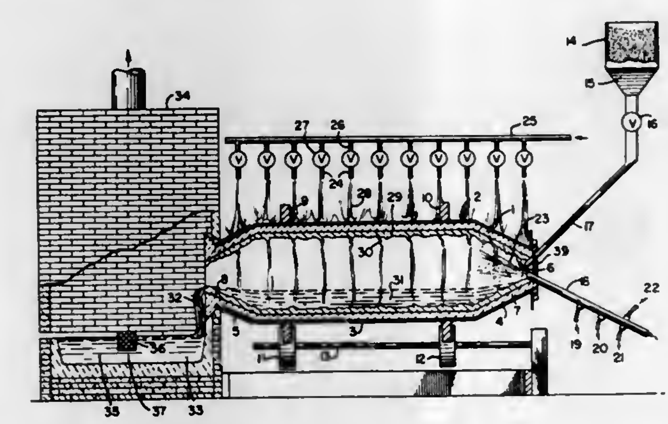

1. A continuous process for melting inorganic raw materials to produce molten glass in a generally cylindrical continuously rotating chamber comprising the following steps:

a. feeding the raw materials into the chamber;

b. providing a flame of high intensity heat produced by the combustion of fuel with a gas containing about 50 to about 100 percent by volume oxygen and directing the flame into the chamber in such a manner that the raw materials are melted; and

c. rotating said chamber at a sufficient speed and cooling the exterior of the chamber with a liquid coolant in such a manner that the inner surface of the chamber is coated with a layer of molten glass, the layer is solidified, and a solidified layer of glass is maintained throughout the process whereby the solidified layer essentially prevents impurities from the inner surface of the chamber from entering the melt; and

d. withdrawing molten glass.

4,061,488

PLANT TREATING MIXTURES AND METHODS UTILIZING SPORES OF *BACILLUS UNIFLAGELLATUS*

Elton W. Mann, Hershey, Pa., assignor to Hershey Foods Corporation, Hershey, Pa.

Continuation-in-part of Ser. No. 306,221, Nov. 13, 1972, abandoned, and Ser. No. 121,199, March 4, 1971, Pat. No. 3,819,829, and Ser. No. 367,749, June 4, 1973, Pat. No. 3,920,812, which is a division of Ser. No. 121,199, March 4, 1971, which is a division of Ser. No. 672,462, Oct. 3, 1967, Pat. No. 3,617,448, which is a continuation-in-part of Ser. No. 334,907, Dec. 31, 1963, abandoned. This application Sept. 18, 1973, Ser. No. 395,661

Int. Cl.[2] A01N *21/02, 15/00*

U.S. Cl. 71—77 **38 Claims**

1. A method for increasing the yield of food crops which comprises treating a food crop yielding plant with a plant treating agent consisting essentially of an effective amount of spores of *Bacillus uniflagellatus* (ATCC No. 15,134), said spores being applied to the plant in such a manner that the spores will eventually come into contact with exudates produced by the roots of the plant, said plant being one which does not have a single large taproot, with no appreciable branching of the root.

13. A substantially uniform mixture of a blend consisting essentially of seeds of a plant which upon cultivation yields a food crop and an effective food crop yield-increasing amount of spores of *Bacillus uniflatellatus* (ATCC No. 15,134).

4,061,489

ABSCISSION COMPOSITIONS

William Szkrybalo, Verona, N.J., assignor to Hoffmann-La Roche Inc., Nutley, N.J.

Continuation-in-part of Ser. No. 347,035, April 2, 1973, abandoned. This application Feb. 11, 1975, Ser. No. 548,937

Int. Cl.[2] A01N *9/00*

U.S. Cl. 71—88 **15 Claims**

1. An abscission composition comprising inert carrier material, and as an active abscission ingredient, an amount effective for abscission of a compound of the formula

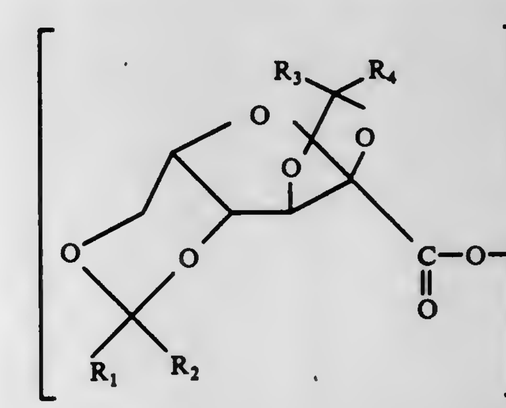

wherein, when n is 1, R″ is hydrogen, sodium, potassium, ammonium, substituted ammonium wherein the substituents are one or more of lower alkyl, lower alkenyl or hydroxy (lower alkyl), straight or branched chain alkyl of from 1 to 20 carbon atoms, straight or branched chain alkenyl of from 2 to 20 carbon atoms, straight or branched chain alkynyl of from 2 to 20 carbon atoms, or halo-lower alkyl and, when n is 2, R″ is calcium or lower alkylene; R_1, R_2, R_3 and R_4 are hydrogen, straight or branched chain alkyl of from 1 to 20 carbon atoms, straight or branched chain alkenyl of from 2 to 20 carbon atoms, straight or branched chain alkynyl of from 2 to 20 carbon atoms, halo-lower alkyl, phenyl or phenyl residue having one or more lower alkyl, lower alkenyl, lower alkynyl, lower alkoxy or halo-loweralkoxy substituents thereon or R_1 and R_2 together and R_3 and R_4 together are each a saturated

ring containing from 3 to 8 carbon atoms; *n* is an integer from 1 to 2 and X is a number from 0 to 1; enantiomers and racemates.

4,061,490
POST-HARVEST PLANT PRESERVING COMPOSITIONS
Hisajiro Yukinaga, Kusatsu; Hideo Kano, Ibaraki, and Masaru Ogata, Kobe, all of Japan, assignors to Shionogi & Co., Ltd., Osaka, Japan
Continuation-in-part of Ser. No. 432,889, Jan. 14, 1974, abandoned. This application Nov. 26, 1975, Ser. No. 635,449
Claims priority, application Japan, Jan. 18, 1973, 48-8065
Int. Cl.² A01N *3/02*
U.S. Cl. 71—68 **11 Claims**

1. A composition for preserving post-harvest plants which comprises, as active ingredient, from about 0.00001 to about 90 percent by weight of 2-benzimidoyl-3-hydroxy-1,4-naphthoquinone, and an agriculturally acceptable carrier therefor.

4,061,491
METHOD OF CONTROLLING WEED GROWTH IN RICE FIELDS WITH TRI-N-BUTYL TIN IMIDAZOLE
Friedrich Arndt, Berlin, and Hans Plum, Heessen, both of Germany, assignors to Schering Aktiengesellschaft, Berlin, Germany
Filed Mar. 11, 1975, Ser. No. 557,285
Claims priority, application Germany, Apr. 18, 1974, 2419208
Int. Cl.² A01N *9/22, 9/00;* C07F *7/22*
U.S. Cl. 71—92 **1 Claim**

1. A method for the treatment of rice fields for the control of weed growth which comprises applying to the water surface of flooded rice fields from about 0.5 to about 10 kilograms per hectare of tri-n-butyl tin imidazole.

4,061,492
METHOD OF ORE REDUCTION WITH AN ARC HEATER
Maurice G. Fey, Pittsburgh, Pa., and Edna A. Dancy, Beaconsfield, Canada, assignors to Westinghouse Electric Corporation, Pittsburgh, Pa.
Continuation of Ser. No. 553,401, Feb. 26, 1975, abandoned. This application June 23, 1976, Ser. No. 699,297
Int. Cl.² C21C *5/52*
U.S. Cl. 75—10 R **5 Claims**

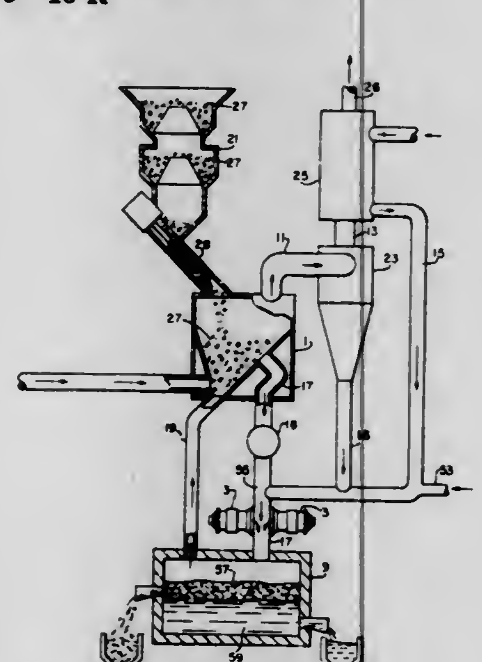

1. In a process for producing a metal or an alloy comprising the steps of

a. partially reducing in an initially fresh supply of reducing gas in a gas-solid reactor at least one metallic oxide and other metallic compounds from a relatively higher valence state to an intermediate product of a lower valence state that is mixed with a quantity of exhaust gases,

b. conducting the exhaust gases through a heat exchanger to preheat a second supply of reducing gas,

c. striking an electric arc in an axial gap between generally tubular electrodes spaced along a common axis to provide an arc heated stream,

d. introducing a feed stock carbon-bearing reductant through the axial gap to provide a reducing atmosphere in the arc heated stream,

e. feeding the intermediate product of partially reduced metallic oxide and compounds and preheated second supply of reducing gas into the arc heated stream in an amount in excess of that required to reduce the metallic oxide and compounds from the lower valence state to substantially pure elemental metal, and

f. recirculating to step (a) the unused excess reducing gas or derivative thereof to assist with the fresh supply of reducing gas in the partial reduction.

4,061,493
METHOD FOR REMOVING UNDESIRED ELEMENTS, PARTICULARLY H_2 AND O_2, IN ELECTROSLAG REMELTING AND AN ARRANGEMENT FOR CARRYING OUT THE METHOD
Heimo Jaeger, Bruck an der Mur, Austria, assignor to Vereinigte Edelstahlwerke Aktiengesellschaft (VEW), Vienna, Austria
Continuation of Ser. No. 580,798, May 27, 1975, abandoned. This application Sept. 24, 1976, Ser. No. 726,190
Claims priority, application Austria, May 28, 1974, 4376/74
Int. Cl.² C22B *4/00;* H05B *7/18*
U.S. Cl. 75—10 C **12 Claims**

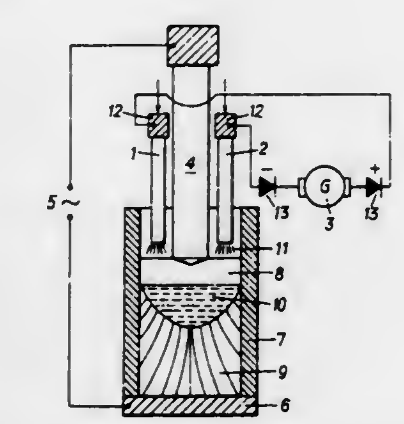

1. In an electroslag remelting method for removing undesired elements from a metal, including the steps of applying an a.c. voltage between at least one self-consuming electrode and a mold containing a growing ingot, melting said self-consuming electrode in a liquified, conductive slag and solidifying the melt in a liquid-cooled mold, the improvement comprising the steps of:

applying a voltage of a certain first magnitude to one non-fusing auxiliary electrode and a voltage of a magnitude different from said first magnitude to another non-fusing auxiliary electrode which are in electrical contact with said slag for creating a d.c. current flow in the slag; and

removing the undesired elements by fusion electrolysis, said undesired elements which are present in the slag in the form of ions, migrating to said auxiliary electrodes and said self-consuming electrodes, wherein the undesired elements are removed by chemical reaction with the air, the slag and the material of the auxiliary electrodes.

4,061,494
FREE-CUTTING GRAPHITIC STEEL
Takao Yokokawa, Tokyo; Shogo Kanazawa, Kamakura; Yasuo Otoguro; Nobukazu Suzuki, both of Machida; Sigeyuki Akase; Noboru Miida, both of Sagamihara; Tadahisa Akazawa, and Kazuya Kuroiwa, both of Muroran, all of Japan, assignors to Nippon Steel Corporation, Tokyo, Japan
Continuation-in-part of Ser. No. 687,583, May 19, 1976, abandoned, which is a continuation of Ser. No. 536,982, Dec. 27, 1974, abandoned. This application July 16, 1976, Ser. No. 705,779
Claims priority, application Japan, Dec. 28, 1973, 48-144720
Int. Cl.² C22C *38/02*
U.S. Cl. 75—124 **1 Claim**

1. A free cutting graphitic steel consisting essentially of
Si: from more than 1.5 to 2.3%
Mn: 0.1 to 0.7%
S: not more than 0.015% one or both Al and Ti in a total amount of: 0.015 to 0.1% rare earth: 0.01 to 0.2% and spheroidized graphite: 0.20 to 0.90% with the balance being iron and unavoidable impurities,
said spheroidized graphite being distributed at a ratio of more than 50 graphites per mm².

4,061,495
PLATINUM GROUP METAL-CONTAINING ALLOY
Gordon Leslie Selman, and Richard John Midgley, both of London, England, assignors to Johnson, Matthey & Co., Limited, London, England
Filed July 7, 1975, Ser. No. 593,250
Claims priority, application United Kingdom, July 8, 1974, 30168/74
Int. Cl.² C22C *19/05, 30/00*
U.S. Cl. 75—134 F **8 Claims**

1. An alloy consisting essentially apart from impurities of 75.4 wt.% nickel, 17.7 wt.% chromium, 1.06 wt.% aluminium and 5.07 wt.% platinum.

8. An alloy consisting essentially, apart from impurities 10.0 wt.% nickel, 23.5 wt% chromium, 44.7 wt.% cobalt. 7.0 wt.% tungsten, 0.2 wt.% titanium, 0.6 wt.% carbon, 0.5 wt.% zirconium, 10.0 wt.% platinum.

4,061,496
COMBINATION OF TWO TIMING LAYERS FOR PHOTOGRAPHIC PRODUCTS
David Eugene Hannie, Pittsford, and Gerald Louis Ducharme, Rochester, both of N.Y., assignors to Eastman Kodak Company, Rochester, N.Y.
Filed Apr. 14, 1976, Ser. No. 676,947
Int. Cl.² G03C *7/00, 5/54, 1/40, 1/76*
U.S. Cl. 96—29 D **32 Claims**

28. In a process of producing a photographic transfer image in color in a photographic element comprising a support having thereon at least one photosensitive silver halide emulsion layer having associated therewith a dye image-providing material, a receiving layer, a barrier associated with a neutralizing layer being permeable by said alkaline processing composition after a predetermined time and which is located between said photosensitive silver halide emulsion layer and said neutralizing layer comprising:

a. imagewise exposing said photographic element;

b. treating said element with an alkaline processing composition in the presence of a silver halide developing agent to effect development of each of said exposed silver halide emulsion layers;

i. an imagewise distribution of dye image-providing material being formed as a function of development and

ii. at least a portion of said imagewise distribution of dye image-providing material diffusing to said dye image-receiving layer; and

c. neutralizing said alkaline processing composition by means of said neutralizing layer associated with said photographic element after said predetermined time;

the improvement comprising employing as said barrier two contiguous timing layers, one layer having an activation energy to penetration from aqueous alkaline solution of less than 18 kcal/mole, said one layer comprising a mixture of cellulose acetate and a maleic anhydride copolymer, said mixture comprising about 5 to about 50 percent by weight of said copolymer, and the second layer comprising a polymeric latex having an activation energy to penetration from aqueous alkaline solution of greater than 18 kcal/mole, said polymeric latex comprising a polymer of from about 5 to about 35 percent by weight of polymerized ethylenically unsaturated monomer, from about 2 to about 10 percent by weight of polymerized ethylenically unsaturated carboxylic acid and from about 55 to about 85 percent by weight of polymerized vinylidene chloride.

4,061,497
CATALYTIC ACTIVATION OF COBALT COMPLEX IMAGING BY COBALT
Glenn R. Wilkes, Webster, and Albert T. Brault, Rochester, both of N.Y., assignors to Eastman Kodak Company, Rochester, N.Y.
Filed July 14, 1975, Ser. No. 595,932
Int. Cl.² G03C *1/00, 1/40*
U.S. Cl. 96—77 **11 Claims**

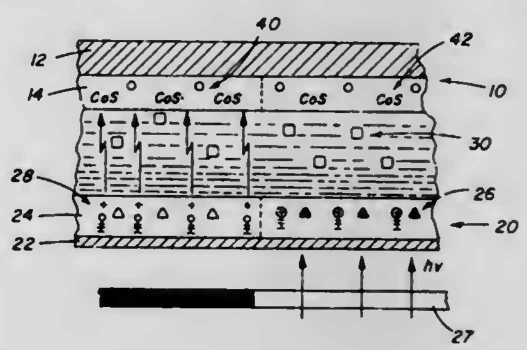

1. An image-recording element comprising
a support, and
at least one image-providing layer on said support,
said layer comprising

a. means for forming CoS in said layer, said means including a source of sulfide ions in an amount of at least about 2.5×10^{-5} moles of sulfide ions dm² and a reducible cobalt(III)complex; and

b. a color coupler capable of forming a dye by reaction with an oxidized primary aromatic amine color developing agent.

10. An image-recording element comprising
a support, and
at least one image-providing layer on said support,
said layer comprising

a. means for forming CoS in said layer, said means including a source of sulfide ions, said source being capable of reacting with cobalt(II) and being present in an amount of at least about 2.5×10^{-5} moles of sulfuide ions/dm²; and

b. a color coupler capable of forming a dye by reaction with an oxidized primary aromatic amine color developing agent, said layer being essentially free of a light-sensitive composition,

and in at least one other layer, a silver halide catalyst capable of photo-initiating a reaction between a reducibel and an oxidizable primary aromatic amine color developing agent.

4,061,498
PHOTOGRAPHIC MATERIAL CONTAINING 2-ACYL-2-PYRAZOLIN-5-ON-COUPLERS
Marcel Jacob Monbaliu, Mortsel; Marc Godfried Mannens, Kessel; Raphaël Karel Van Poucke, Berchem, all of Belgium; Hans-Heinrich Credner, and Ernst Meier, both of Munich, Germany, assignors to AGFA-Gevaert, N.V., Mortsel, Belgium
Filed May 27, 1976, Ser. No. 690,583
Claims priority, application Germany, May 30, 1975, 2524134
Int. Cl.^{2} G03C *1/40*
U.S. Cl. 96—100 R **2 Claims**

1. Light-sensitive material comprising at least one silver halide emulsion layer and a 2-acyl-3-pyrazolin-5-one coupler carrying an alkyl group or aryl group in the 1-position and an alkyl group, aryl group, anilino group or acylamino group in the 3-position.

4,061,499
PROCESS FOR HARDENING SILVER HALIDE PHOTOGRAPHIC LAYERS WITH ORGANIC ASYMMETRIC MONOCARBODIIMIDES
Wolfgang Himmelmann, Leverkusen, Germany, assignor to AGFA-Gevaert Aktiengesellschaft, Leverkusen, Germany
Filed Oct. 6, 1976, Ser. No. 730,263
Claims priority, application Germany, Oct. 11, 1975, 2545755
Int. Cl.^{2} G03C *1/30*
U.S. Cl. 96—111 **9 Claims**

1. A process for providing a hardened layer in a photographic material containing a light sensitive silver halide emulsion and at least one layer containing a protein containing binder wherein the improvement comprises incorporating a hardener in the binder which is a water-soluble, organic, asymmetric monocarbadiimide of the formula:

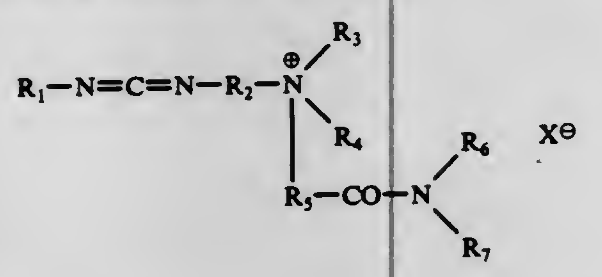

wherein

R_1 denotes alkyl with 1–6 carbon atoms, cycloalkyl, aralkyl, alkoxyalkyl or an olefinically unsaturated lower alkyl group,
R_2 denotes alkylene with 2–4 carbon atoms,
R_3 and R_4 denote alkyl with 1–3 carbon atoms or
R_3 and R_4 together denote the atoms required to complete a 5- to 7-membered saturated heterocyclic ring which may contain other hetero atoms in addition to the nitrogen atom,
R_5 denotes alkylene with 1 to 3 C-atoms,
R_6 denotes hydrogen, alkyl with 1 to 4 C-atoms, cycloalkyl, aryl or SO_2-alkyl,
R_7 denotes hydrogen or alkyl with 1 to 9 C-atoms, or
R_6 and R_7 together denote the atoms required to complete a 5- to 7-membered saturated heterocyclic ring which may contain other hetero atoms in addition to the nitrogen atom, and
X^- denotes an anion.

4,061,500
PRESERVATIVE FOR WOOD AND OTHER FIBROUS MATERIALS
Bror Olof Hager, Forsetevagen 5, Djursholm, Sweden
Filed July 7, 1976, Ser. No. 703,287
Claims priority, application Sweden, Mar. 29, 1974, 7404296
Int. Cl.^{2} C09D *5/14*
U.S. Cl. 106—15 R **4 Claims**

1. An alkaline-reacting preservative composition for protection of wood against blue stain consisting of,
a normal fatty acid having from 6 to 11 carbon atoms;
boric acid; and
at least one alkaline compound selected from the group consisting of sodium hydroxide, sodium carbonate, potassium hydroxide and potassium carbonate,
the amount of said alkaline compound present being in a stoichiometric surplus based on the fatty acids and sufficient to make the preservative composition freely soluble in water.

4,061,501
REFRACTORY LININGS
Paul Lennart Ivarsson, and Peter Harry Havranek, both of Hoganas, Sweden, assignors to Hoganas AB, Hoganas, Sweden
Continuation-in-part of Ser. No. 579,698, May 21, 1975, abandoned, which is a continuation-in-part of Ser. No. 358,304, May 8, 1973, abandoned, and Ser. No. 468,418, May 8, 1974, abandoned. This application Oct. 6, 1975, Ser. No. 620,228
Claims priority, application Sweden, Apr. 13, 1973, 7305330; Finland, May 9, 1972, 1304/72; Sweden, May 11, 1973, 7306722
Int. Cl.^{2} C04B *35/04, 35/14, 35/52*
U.S. Cl. 106—44 **9 Claims**

1. A method for producing a lining material consisting essentially of refractory grains screened below 6 mm and selected from the group consisting of magnesite, dolomite, alumina, bauxite kaolin, silicon carbide, and quartzite, and from 2 to 15 percent by weight of the total solids content of a binder selected from the group consisting of bond clay, aluminate and chromate cements, phosphoric acid, spent sulphite liquor and carboxymethyl cellulose, and containing an additional content of a water suspension colloidal silica in a quantity corresponding to 0.4 – 4% SiO_2 by weight of the solids content of the lining material and further containing carbonaceous material selected from the group consisting of coke, graphite, pitch, and silicon carbide, screened below 1 mm comprising mixing the carbonaceous material and the colloidal silica in the form of a water suspension, and subsequently intermixing the mixture thus obtained with the other ingredients.

4,061,502
BALL CLAY
William Windle, London, England, assignor to English Clays Lovering Pochin & Company Limited, England
Filed Nov. 26, 1975, Ser. No. 635,334
Claims priority, application United Kingdom, Nov. 29, 1974, 51892/74
Int. Cl.^{2} C04B *33/13*
U.S. Cl. 106—72 **12 Claims**

1. A method of improving the properties of a ball clay, which method comprises the steps of:
a. suspending the raw ball clay in water containing a dispersing agent to form a deflocculated suspension the solids content of which is in the range of from 55% to 75% by weight;
b. passing the deflocculated aqueous suspension of raw ball clay through one or more vibrated sieves, at least one of which has a nominal aperture in the range of from 50 to 100 microns; and
c. flocculating the sieved material and subjecting the flocculated material to thermal drying.

4,061,503
SILANE TREATMENT OF TITANIUM DIOXIDE PIGMENT
Sidney Ethan Berger, Rye, N.Y., and George Anthony Salensky, Metuchen, N.J., assignors to Union Carbide Corporation, New York, N.Y.
Filed Sept. 29, 1976, Ser. No. 727,673
Int. Cl.^{2} C09C *1/36*
U.S. Cl. 106—300 **10 Claims**

1. A composition comprising titanium dioxide particles containing on their surfaces a silane, its hydrolyzates or resulting condensate, which silane possesses at least two to about three hydrolyzable groups bonded to the silicon thereof and an organic group which contains a polyalkylene oxide group, said silane being present on said surfaces in an amount sufficient to improve the dispersibility of said particles in a resin or plastic medium.

4,061,504
APPARATUS FOR CLEANING AUTOMATIC MILKING MACHINES
Robert R. Zall, Ithaca; A. Theodore Sobel, Brooktondale, and Donald R. Price, Ithaca, all of N.Y., assignors to Cornell Research Foundation, Inc., Ithaca, N.Y.
Filed May 21, 1976, Ser. No. 688,569
Int. Cl.^{2} A01J *7/00;* **B08B** *9/10*
U.S. Cl. 134—95 **1 Claim**

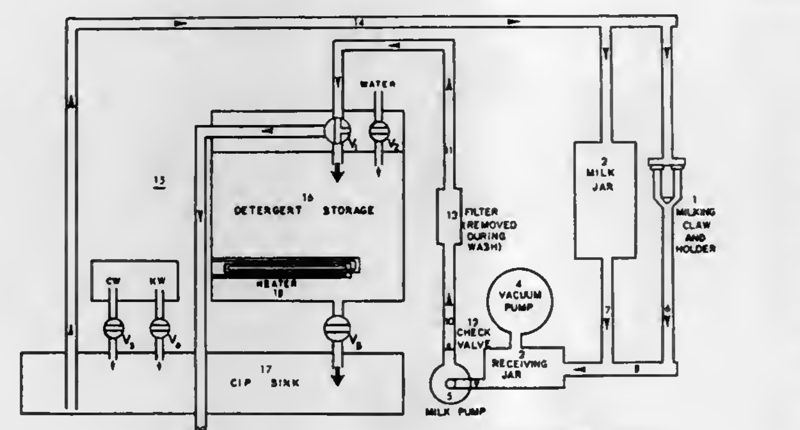

CIP SYSTEM WITH DETERGENT RECYCLE

1. A clean-in-place system for cleaning a component of an automatic milking machine, comprising
a. a container (17);
b. means including first valve means (V3, V4) for supplying to said container a quantity of prerinsing liquid having a temperature of between 50° F and 120° F;
c. an insulated storage receptacle (16) for containing a quantity of a cleaning solution;
d. heater means (18) arranged in said storage receptacle for maintaining said cleaning solution at a temperature of between 50° F. and 120° F.;
e. means including second valve means (V_5) for supplying the cleaning solution from said storage receptacle to said container;
f. first conduit means (14) connected at one end with said container and being adapted for connection at its other end with one end of said milking machine component;
g. two-position diverter valve means (V_1) having an inlet, a first outlet connected solely with said storage receptacle, and a second outlet connected with waste, said diverter valve means being operable between first and second positions to alternately connect the inlet thereof with said first and second outlets, respectively;
h. liquid pump means (5) having an inlet adapted for connection with the other end of said milking machine component, and an outlet connected with the inlet of said diverter valve means; and
i. vacuum pump means (4) connected with the inlet of said pump means;
j. said vacuum pump means being initially operable—when said first valve means are open, second valve means are closed and said diverter valve is in its second position—for drawing pre-rinsing liquid from said container through said component to the inlet of said pump means, said liquid pump means being operable to discharge the used pre-rinsing liquid to waste, said vacuum pump and liquid pump means then being operable—when said first valve means are closed, said second means is open, and said diverter valve is in its first position—for drawing the cleaning solution from said storage receptacle through the component via said container and for discharging the used cleaning solution into said storage receptacle, said liquid pump means and said vacuum pump means being subsequently operable—when said first valve means is open, said second valve means is closed, and said diverter valve means is in its second position—to refill said container with a quantity of clean rinsing liquid, to draw the rinsing liquid through said component, and to discharge the used rinsing liquid to waste.

4,061,505
RARE-EARTH-METAL-BASED THERMOELECTRIC COMPOSITIONS
Edward F. Hampl, Jr., St. Paul, Minn., assignor to Minnesota Mining and Manufacturing Company, St. Paul, Minn.
Continuation of Ser. No. 187,861, Oct. 8, 1971, abandoned, and a continuation-in-part of Ser. No. 36,131, May 11, 1970, abandoned. This application Oct. 15, 1973, Ser. No. 406,277
Int. Cl.^{2} H01G *1/18*
U.S. Cl. 136—238 **5 Claims**

1. In a thermoelectric generator, an N-type thermoelectric leg, at least part of the length of which consists essentially of a defect-doped, mixed-valence, N-type thermoelectric composition that exhibits a negative absolute Seebeck coefficient of at least 175 microvolts/°C. and consists essentially of rare-earth metal selected from gadolinium and erbium and chalcogen selected from selenium and tellurium, with from 0 to about 5 atomic-percent of the metal being replaced with cerium, neodymium, praseodymium, yttrium, or a mixed-valence transition element and with from 0 to about 5 atomic percent of the chalcogen being replaced with sulfur or oxygen, and the ratio of chalcogen elements to metal elements being between 1.47 and slightly less than 1.5 to 1; at least about 99 area-percent of said composition being a single phase.

4,061,506
CORRECTING DOPING DEFECTS
David Joal McElroy, Houston, Tex., assignor to Texas Instruments Incorporated, Dallas, Tex.
Filed May 1, 1975, Ser. No. 573,696
Int. Cl.^{2} H01L *21/265*
U.S. Cl. 148—1.5 **22 Claims**

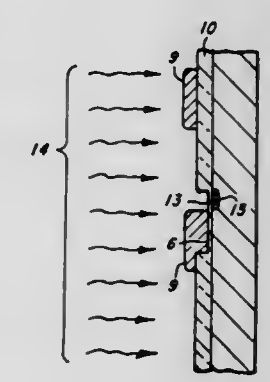

1. In the method of manufacturing semiconductor devices having particular portions determining the operative characteristics thereof, and wherein said method includes the step of precisely locating at least one of said portions with respect to another, the improvement of identifying devices which are latently defective due to excessive misalignment of one or

more pair of interrelated regions by introducing selected impurities to those segments which are excessively misaligned, said selected impurities being of a conductivity type effecting electrical characteristics similar to those predominant ambient surface impurities which with the passage of time tend to render the device inoperative by degrading the operating characteristics of those portions of the device which are misaligned, said selected impurities being introduced in quantities sufficient to complete the said degradation but less than sufficient to degrade the operating characteristics of portions which are not misaligned.

4,061,507
WRENCH AND METHOD OF MAKING THE SAME
Norbert Allmendinger, Willoughby Hills, Ohio, assignor to Richmond Industries, Inc., Willoughby, Ohio
Filed June 28, 1976, Ser. No. 700,190
Int. Cl.^{2} C21D *1/06, 9/00*
U.S. Cl. 148—12 R **5 Claims**

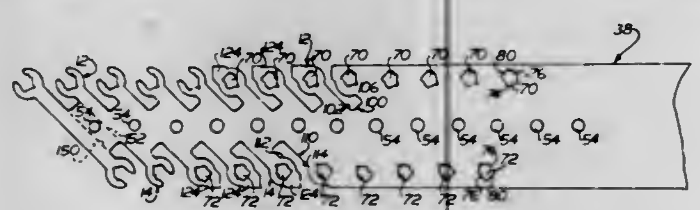

1. A method of sequentially forming a plurality of open-ended wrenches each of which has a pair of spaced apart jaws with accurately formed operating surfaces extending inwardly from outer end portions of the jaws, said method comprising the steps of providing a strip of metal, sequentially forming jaws of a plurality of wrenches to a size and configuration approximating but larger than their final size and configuration by shearing portions of the strip of metal, said step of sequentially forming the jaws of a plurality of wrenches to a size and configuration approximately their final size and configuration including the step of leaving a section of metal extending between outer end portions of the jaws of each of the wrenches, sequentially forming the jaws of the wrenches to their final size and configuration, said step of forming the jaws of the wrenches to their final size and configuration including the step of shearing metal to form the jaw operating surfaces of each of the wrenches while holding the jaws against movement relative to each other with the section of metal extending between the outer end portions of the jaws, and separating from each of the wrenches the section of metal extending between the outer end portions of the jaws.

4,061,508
METHOD FOR CONTINUOUSLY MEASURING THE ANNEALING LEVEL ON WIRES OR STRIPS
Marc Moreau, Asnieres, France, assignor to Trefimetaux, Paris, France
Filed June 1, 1976, Ser. No. 691,608
Claims priority, application France, June 6, 1975, 75.18328
Int. Cl.^{2} G01N *3/00;* **B21C** *51/00*
U.S. Cl. 148—128 **5 Claims**

1. A method of continuously measuring and adjusting the annealing level on wires or strips comprising the steps of receiving a wire or strip from a continuous annealing installation, passing the wire or strip in a continuous feed over a deforming member at a tension less than that corresponding to the elastic limit of the wire or strip, selecting the configuration of the deforming member and the tension so that passage over the deforming member causes permanent axial elongation of the wire or strip within a predetermined range, and sensing the elongation for controlling the parameters of the annealing operation.

4,061,509
HIGH PERMEABILITY, LONG WEARING MAGNETIC HEAD ALLOY
Nobukazu Kuroda, Yokohama, Japan, assignor to Sony Corporation, Tokyo, Japan
Continuation-in-part of Ser. No. 480,116, June 17, 1974, abandoned, and Ser. No. 544,674, Jan. 28, 1975, Pat. No. 3,979,233. This application July 7, 1976, Ser. No. 703,245
Claims priority, application Japan, Feb. 5, 1974, 49-14747
The portion of the term of this patent subsequent to Sept. 7, 1993, has been disclaimed.
Int. Cl.^{2} C04B *35/00;* **C22C** *19/05*
U.S. Cl. 148—31.55 **1 Claim**

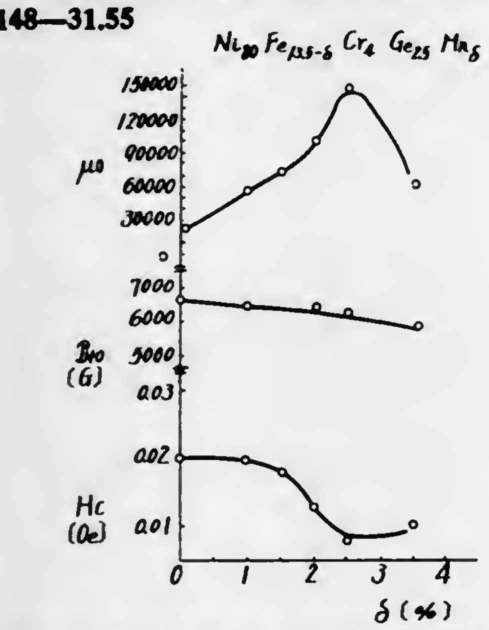

1. A magnetic alloy having superior effective permeability and good wear resistance characteristics for a magnetic head member consisting essentially of, on a 100 weight percent basis, from 79 to 85 weight percent nickel, from 2 to 6 weight percent chromium, from 1 to 10 weight percent germanium, from and including 0 to 4 weight percent manganese, and from 9 to 17 weight percent iron, said alloy being characterized by having a coercive force smaller than 0.07 Oersted, a magnetic flux density greater than 6,000 Gausses at 10 Oersteds, an initial permeability greater than 4,000, and a specific resistance greater than 60$\mu\Omega$-cm.

4,061,510
PRODUCING GLASS PASSIVATED GOLD DIFFUSED RECTIFIER PELLETS
Richard W. Kennedy, Skaneateles, and Edward G. Tefft, Auburn, both of N.Y., assignors to General Electric Company, Auburn, N.Y.
Continuation-in-part of Ser. No. 405,489, Oct. 11, 1973, Pat. No. 3,941,625. This application Feb. 2, 1976, Ser. No. 654,282
The portion of the term of this patent subsequent to Mar. 2, 1993, has been disclaimed.
Int. Cl.^{2} H01L *21/225*
U.S. Cl. 148—187 **9 Claims**

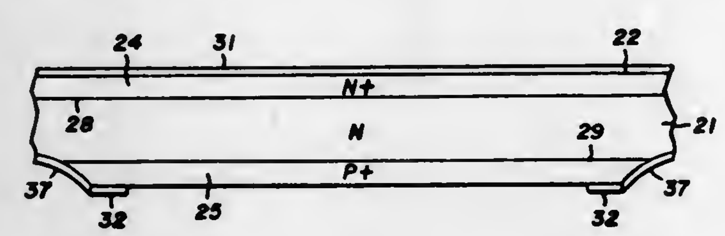

1. A method of manufacturing semiconductor rectifier pellets comprising the steps of:

providing a semiconductor wafer defining first and second laterally extending major surfaces, said wafer being of a size sufficient to form a plurality of laterally spaced rectifier pellets; wherein the region immediately underlying said first surface is of N-type conductivity and said wafer has a P/N junction therein extending laterally through said pellets;

forming an oxide layer on one of said major surfaces at an elevated oxide-forming temperature;

forming a plurality of laterally spaced openings in said oxide layer with said openings being located respectively in the areas overlying the active device regions of said pellets;

diffusing an auxiliary impurity into said device regions through said openings at an elevated diffusion temperature below said oxide-forming temperature, said auxiliary impurity being one which is selected to decrease carrier lifetime in said pellets;

masking said openings;

forming a second set of openings in said oxide layer, said second set of openings exposing the areas of said wafer between said pellets;

etching grooves in said wafer through said second set of openings, said grooves intersecting said P/N junction and lying between said pellets; and

providing a passivant material in said grooves covering the intersection of said junction with said grooves, said passivant material being provided at a temperature below said diffusion temperature.

4,061,511
ALUMINUM SILICATE STABILIZER IN GAS PRODUCING PROPELLANTS
Robert J. Baczuk, Salt Lake City, Utah, assignor to The United States of America as represented by the Secretary of the Navy, Washington, D.C.
Filed Aug. 2, 1976, Ser. No. 710,954
Int. Cl.^{2} C06B *45/10*
U.S. Cl. 149—19.9 **1 Claim**

1. In a solid propellant selected from the group consisting of casting power of nitrocellulose and nitroglycerin, high energy fluorine propellant, single base nitrate ester propellant, double base nitrate ester propellant and ammonium perchlorate/Al with rubber binder propellant, that gives off gases selected from the group consisting of N_2, CO_2, CO, F_2 and NO_x during the aging process, the improvement consisting of an additional ingredient in said propellant of an aluminum silicate molecular sieve having a particulate size of less than about 10 microns, a pore size of less than about 10 angstroms, and in an amount of about 0.2 percent by weight of said propellant.

4,061,512
SOLID PROPELLANTS FOR GENERATING HYDROGEN
William M. Chew; Orval E. Ayers; James A. Murfree, and Pasquale Martignoni, all of Huntsville, Ala., assignors to The United States of America as represented by the Secretary of the Army, Washington, D.C.
Filed Mar. 22, 1976, Ser. No. 669,064
Int. Cl.^{2} C06B *43/00*
U.S. Cl. 149—22 **3 Claims**

1. A solid propellant composition in the form of a compacted solid propellant pellet that is formed by dead pressing using a pressure from about 500 pounds total load to about 10,000 pounds total load, said solid propellant pellet producing hydrogen or deuterium from a self-sustaining reaction after said reaction is initiated by a heat source sufficient to initiate said reaction, said solid propellant composition comprising a uniform predetermined molar ratio mixture of a first reactant compound which is a complex metal boron compound selected from the complex metal boron compounds of the general formula $M(BH_4)_x$ or $M(BD_4)_x$, (wherein M equals a metal selected from an alkali or an alkaline earth metal and x equals the valence of said metal, H is hydrogen, and D is deuterium) and a second reactant compound which is an ammonium salt selected from the ammonium salts of the general formula $(NH_4)_2Y$ or a deuteroammonium salt selected from the deuteroammonium salts of the general formula $(ND_4)_2Y$, (wherein Y represents the anion Cr_2O_7 with a total charge of 2, N is nitrogen, H is hydrogen, and D is deuterium), said first reactant compound varying in a molar ratio from about 2 to about 7 while said second reactant compound varying in a molar ratio from about 1 to about 2.

4,061,513
WRAPPING APPARATUS FOR PIPELINE JOINTS
Carl G. Danielson, P.O. Box 24248, Houston, Tex. 77029
Filed Dec. 20, 1976, Ser. No. 752,137
Int. Cl.^{2} B65H *81/00, 23/06*
U.S. Cl. 156—392 **10 Claims**

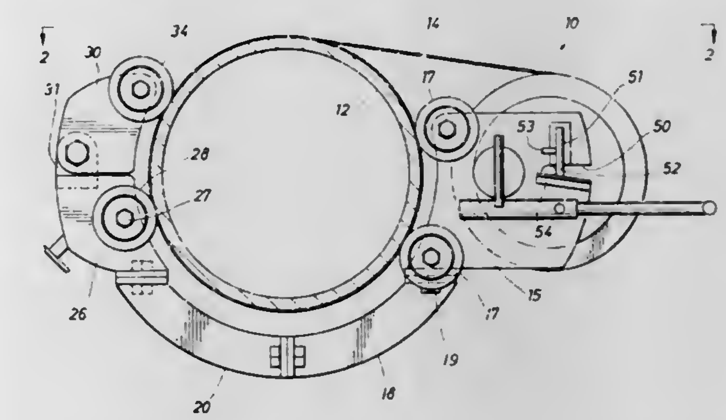

1. An apparatus for placing a cigarette wrap of insulative material around a pipe at a bare place prior to placing the pipe in the ground, comprising:

two sets of first, second and third alignment rollers;

a framework supporting said two sets of first, second and third rollers which positions said two sets of rollers in contact with a pipe to be coated, and wherein the two sets are spaced apart from one another and where said rollers being spaced around the pipe to clamp said framework to the pipe while yet permitting the framework to rotate around the pipe one revolution which rotational movement is supported on said rollers; and

supply means carried by said framework for receiving and dispensing insulative material in sheet form directly onto the pipe with a specified tension and alignment and between said two sets of rollers to place one turn of such material on the pipe and wherein said supply means carries the sheet of material around the pipe to place a cigarette wrap thereon.

4,061,514
PROCESS FOR MASS-PRODUCING WORKS OF ART MADE FROM WOODEN STRIPS
Arthur Strugatz, 256 Asharoken Ave., Northport, N.Y. 11768
Filed Jan. 17, 1977, Ser. No. 760,086
Int. Cl.^{2} B44C *1/28*
U.S. Cl. 156—63 **5 Claims**

1. A process for mass-producing works of art fabricated from strips of material comprises:

a. predetermining the number, size, and shape of the strips required to achieve the desired final design or picture of the work of art;
b. cutting the proper number of lath strips to the sizes necessary for making the final design or picture;
c. painting or staining the cut pieces to the desired color or shade for the final design or picture;
d. dye-stamping the cut pieces to the proper shape for forming the final design or picture;
e. assembling the shaped pieces into the final design or picture; and
f. fixing the assembled pieces to a suitable backing.

4,061,515
METHOD OF MANUFACTURING SUSPENSION INSULATORS FOR ELECTRIC POWER LINES AND DEVICE FOR THE IMPLEMENTATION THEREOF
Michel Willem, Vichy, France, assignor to Ceraver S.A., Paris, France
Filed Dec. 20, 1976, Ser. No. 752,840
Claims priority, application France, Oct. 12, 1976, 76.30625
Int. Cl.² B32B *31/16*
U.S. Cl. 156—73.6 8 Claims

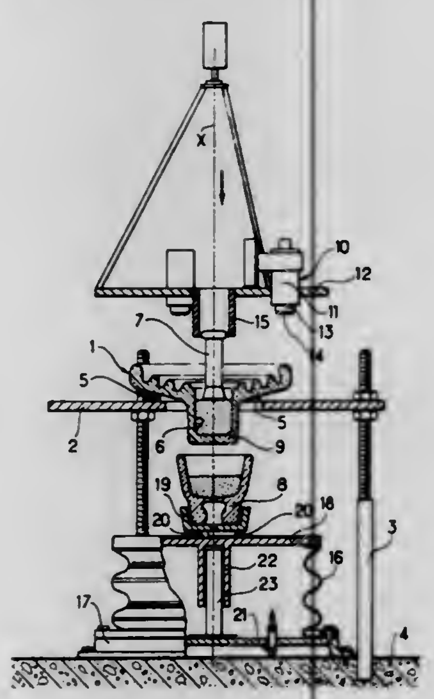

1. In the manufacture of a cap and pin type suspension insulator for an electric power line, a method of cementing said cap and said pin to a dielectric body by vibratory compacting of a sealing composition, the method comprising the steps of: resiliently mounting the body on a supporting table, placing the sealing composition in an internal cavity of the body and in the cap, bringing together the members to be joined with the composition sandwiched between the members, and causing the body to so vibrate by means of vibropercussion that the supporting table remains substantially isolated from vibration while the body executes a vibratory motion including a vertical component superimposed on a tilting component having a rotating axis of tilt such that the body executes a swashplate-like wobble.

4,061,516
PATCHING TECHNIQUE FOR DAMAGED, PRINTED DESIGN
Jay R. George, Manheim; Larry L. Line, and David H. Reed, both of Lancaster, all of Pa., assignors to Armstrong Cork Company, Lancaster, Pa.
Filed Oct. 4, 1976, Ser. No. 729,473
Int. Cl.² B32B *35/00*
U.S. Cl. 156—94 7 Claims

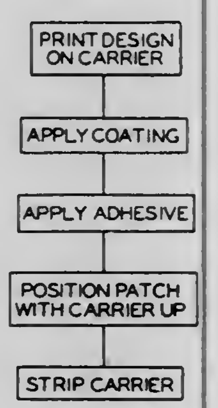

1. In a process for repairing printed design defects in a decorative surface, the steps comprising:

a. printing the decorative surface and printing a compatible design on a carrier with the same printing setup,
b. applying over the design on the carrier a background coating,
c. then applying over said last mentioned coating on the carrier an adhesive layer,
d. said carrier with said printing and coatings forming a repair patch,
e. positioning at least a part of said patch on the design defect in said decorative surface with said adhesive layer adjacent said decorative surface, and
f. stripping said carrier from said patch.

4,061,517
METHOD OF MAKING FLUOROCARBON RESIN COVERED GASKETS
Frederick O. Dutton, III, Moorestown, and Joseph H. Stewart, Jr., Cherry Hill, both of N.J., assignors to Chemelec Products, Inc., Cherry Hill, N.J.
Continuation-in-part of Ser. No. 608,065, Aug. 27, 1975, abandoned. This application May 17, 1976, Ser. No. 687,013
Int. Cl.² B29C *17/04*
U.S. Cl. 156—212 7 Claims

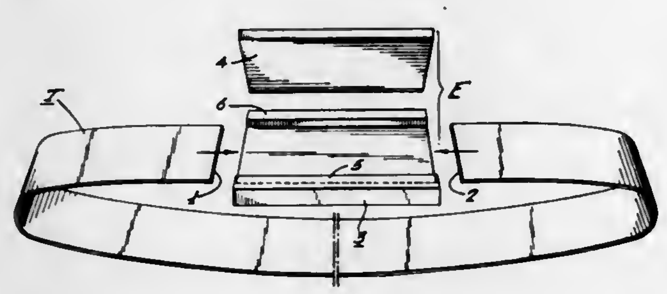

1. The method of making annular gaskets having outer covers of fluorocarbon resin which comprises:

forming a flat strip of a fluorocarbon resin tape of predetermined length and uniform width and thickness throughout the length thereof,

disposing the opposite ends of said flat strip in abutting relation and confining the abutting opposite end portions of the strip at the opposite sides and surfaces thereof according to the uniform width and thickness dimensions of the tape.

subjecting the end portions of the strip while thus confined to a temperature and pressure operable to weld the confined abutting end portions of the tape and form a continuous circle of flat tape having uniform width and thickness throughout the length thereof,

pressing and circumferentially elongating the opposite side and edge portions of the continuous circle of tape to increase the circumferential dimension of said tape in the opposite edge portions thereof substantially to the outer circumference of a selected annular inner gasket,

and doubling the circumferentially elongated tape about the inner edge of said selected annular inner gasket to provide a cover therefor with the opposite side and edge portions of said tape disposed in overlying relation upon the opposite faces of the inner gasket.

4,061,518
METHOD FOR MAKING AN ARTICLE HAVING REPLICATED COATING WITH DURABLE DIELECTRIC OVERCOAT
Viola F. Burroughs; Hasso G. Vahl, both of Los Angeles, and Harro W. D. Wahl, Whittier, all of Calif., assignors to Harold C. Hohbach, Atherton, Calif.
Continuation of Ser. No. 484,409, July 1, 1974, abandoned. This application June 10, 1976, Ser. No. 694,651
Int. Cl.² B32B *33/00, 27/38, 31/26*
U.S. Cl. 156—232 6 Claims

1. In a method for forming replicated optical parts, producing a master having a surface to be replicated formed thereon, depositing in a vacuum a parting agent in the form of a silicon oil on to the surface to form a thin parting layer of the silicon oil, forming a protective coating on the parting layer in a vacuum at a relatively low temperature ranging from approximately 40° to 100° C but at a sufficiently high temperature to

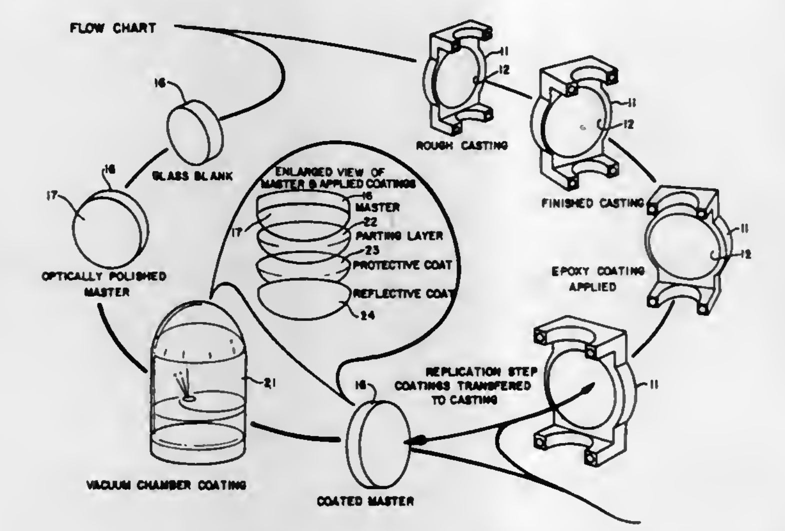

cause an initial partial curing of the protective coat, forming an optical coating on the protective coat at a relatively low temperature ranging from approximately 40° to 100° C, and post-curing the part with the coats thereon in air at an elevated temperature in excess of approximately 200° C for a minimum period of time in excess of approximately 4 hours to cause final curing and hardening of the protective coat.

4,061,519
PROCESS FOR THE CONTINUOUS OVERLAP WELDING OF PLASTIC SHEETS OR PANELS
Heiner I. Hammer, Rosengarten, Germany, assignor to Schlegel Engineering GmbH, Hamburg, Germany
Continuation of Ser. No. 581,244, May 27, 1975, abandoned. This application Jan. 28, 1977, Ser. No. 763,505
Claims priority, application Germany, May 29, 1974, 2426154
Int. Cl.² B32B *31/00*
U.S. Cl. 156—244 8 Claims

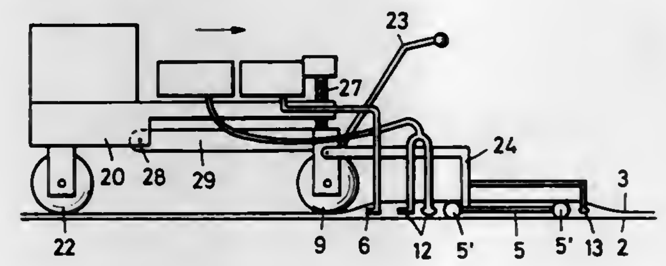

1. In a process for the continuous overlap welding of thermoplastic sheets or panels on the ground by heating and compressing the facing overlapped sheets, comprising the steps of placing the sheets or panels to be welded on the ground in side by side position, overlapping the edges of adjacent sheets or panels and maintaining one edge on the ground, lifting the overlapped edge of the upper sheet or panel and placing a preheating means between the sheets or panels in the region of said overlapped edges, controlling the location of the preheating means between the said overlapped edges in accordance with the unevenness of the ground in the area of preheating and preheating the said overlapped edges to the softening point thereof, extruding additional material between the preheated overlapped edges while the edges are apart, heating the additional material into the thermoplastic state at least high enough to maintain a sufficient level of heat in said overlapped edges to permit the bonding of said edges to said additional material, and controlling the placement of said additional material such that said additional material contacts both edges substantially simultaneously, and applying pressure to press the overlapped edges against the ground to weld said sheets or panels to said additional material and thereby to each other.

4,061,520
METHOD OF MAKING COMPOSITE HIGH STRENGTH TO WEIGHT STRUCTURE
Andrew M. Cecka, Covina, and Pol Dano, Camarillo, both of Calif., assignors to Fansteel Inc., North Chicago, Ill.
Division of Ser. No. 633,300, Nov. 17, 1975, abandoned, which is a continuation of Ser. No. 442,204, Feb. 13, 1974, abandoned. This application Sept. 3, 1976, Ser. No. 720,514
Int. Cl.² B29G *7/00*
U.S. Cl. 156—245 4 Claims

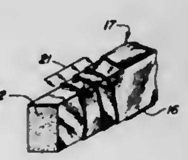

1. A method of producing a tennis racket frame of high strength to weight ratio comprising providing a mold cavity shaped in the form of a tennis racket frame having oppositely disposed faces and having a handle with a grip at one end and a head of ellipsoid shape attached to the other end, the handle grip of said mold cavity having two substantially parallel cavity portions corresponding to two sides of said handle, forming an elongated core of uniform cross section from a foamable resin composition having the consistency of a firm putty, having an expansion ratio from about 1.5 to about 5.0 and comprising an uncured resin, a curing agent and a blowing agent, wrapping said core with a plurality of layers of unidirectionally oriented resin coated graphite fibers, each of said layers having its fibers oriented at an angle to the direction of said core, at least one of said layers having its fibers oriented in a direction different from the direction of orientation of the fibers in at least one other of said layers, arranging said wrapped core within said mold cavity with both ends of said wrapped core at the grip end of said mold, said wrapped core extending from one of its ends at the grip end of said mold cavity, up one of said substantially parallel cavity portions in the handle portion of said mold cavity, around a major portion of the head portion of said mold cavity and down the other substantially parallel cavity portion in the handle portion of said mold cavity to terminate at the grip end of said mold cavity, arranging an additional layer of graphite fibers on each of said oppositely disposed faces of said frame along the direction of said core, therafter sealing said mold cavity, heating said foamable resin composition to cause expansion thereof and generate pressure within said mold cavity pressing said core against said layers of graphite fibers, and thereafter removing said expanded wrapped core as an integral composite tennis racket frame, said mold cavity being of smaller cross-sectional area than the cross-sectional area of said core would be if said core were permitted free expansion.

4,061,521
METHOD AND APPARATUS FOR MANUFACTURE OF SWATCH BEARING SHEETS
Stanley Lerner, Highland Park, and Robert Shearer, Park Ridge, both of Ill., assignors to Color Communications, Inc., Melrose Park, Ill.
Filed July 19, 1976, Ser. No. 706,433
Int. Cl.² B32B *31/00*
U.S. Cl. 156—265 18 Claims

1. A method of manufacture of swatch bearing sheets each bearing rows of swatches adhered to the sheet at predetermined locations thereon, said method comprising the steps of:

feeding a succession of sheets along a predetermined straight path at timed intervals, feeding a first set of webs of swatch material to a first swatch forming and applying station, simultaneously severing individual swatches from the webs to form a first set of swatches, transferring simultaneously the first set of swatches to the sheet by rolling contact a set of swatches from an in-line intersecting path to said straight path, and adhering a plurality of swatches formed from said first set of webs to each sheet traveling through the first swatch forming and applying station at first predetermined locations on each sheet, feeding each of the sheets from said first station along said

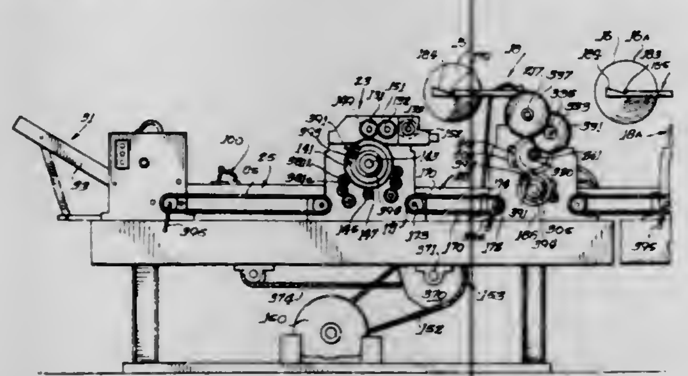

straight path to a second swatch forming and applying station located downstream of said first station and in-line with said first station, simultaneously severing a second set of swatch material webs at said second station to form a second set of swatches, and tranferring simultaneously the second set of swatches to the sheet by rolling contact the second set of swatches from an in-line an intersecting path with said straigth path, and adhering by rolling contact a second set of swatches severed from the second sheet of webs of swatch material to each sheet passing along said path and through said second station to provide the sheet with plural rows of swatches attached thereto at predetermined locations on the sheet.

4,061,522

METHOD AND APPARATUS FOR TERMINATING A FIBER OPTIC BUNDLE

Michael L. Bauerkemper, Cerritos, Calif., assignor to International Telephone and Telegraph Corporation, New York, N.Y.

Filed Feb. 3, 1977, Ser. No. 765,073

Int. Cl.^{2} C09F *5/00*

U.S. Cl. 156—305 **12 Claims**

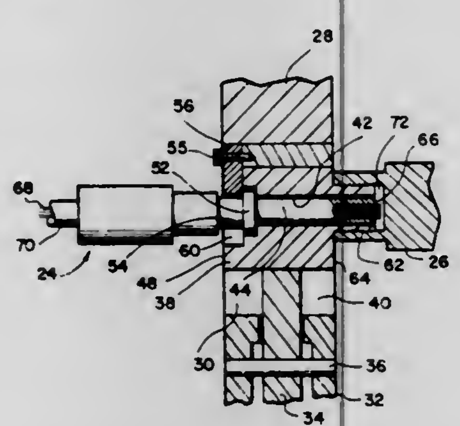

1. A method of mounting a contact having a bore therethrough, a front mating end and a rear end on a fiber optic bundle comprising the steps of:

inserting the bundle without an adhesive into said bore from the rear of said contact until the front face of said bundle is substantially flush with said front mating end;

thereafter injecting an adhesive into said bundle through the opening of said bore at said front mating end; and

allowing said adhesive to cure.

4,061,523

PAPER WELDING APPARATUS FOR BOOKBINDING MACHINERY

Bernard T. Sendor, 608 Blair Drive, Westbury, Long Island, N.Y. 11429, and Mortimer S. Sendor, 80-30, 221st St., Queens Village, Long Island, N.Y. 11590

Division of Ser. No. 480,244, June 17, 1974, Pat. No. 3,943,024, which is a continuation of Ser. No. 220,761, Jan. 26, 1972, abandoned. This application Mar. 8, 1976, Ser. No. 664,826

Int. Cl.^{2} B32B *19/02;* **H05B** *5/00;* **B42D** *1/00*

U.S. Cl. 156—380 **13 Claims**

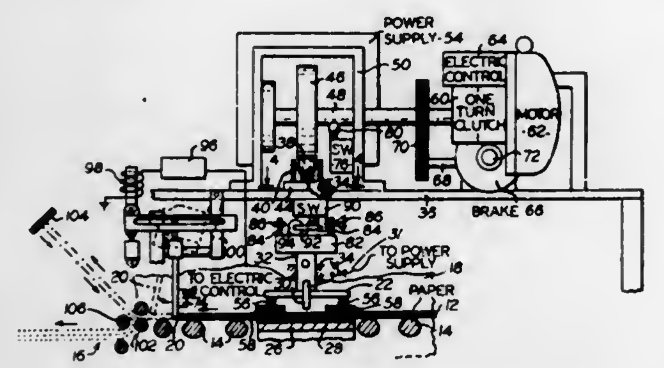

1. Apparatus for binding books by welding paper sheets together including in combination clamping jaws for applying a stationary pressure to a group of paper sheets in contact with each other along regions that constitute edges of pages printed on said sheets, means for heating the paper along said regions including a radio-frequency generator, connections through which radio-frequency power from the generator can generate paper-welding heat in the clamped edges of the sheets, means for changing the heat for welding in accordance with the thickness of the group of sheets, with which the apparatus is used, to raise the clamped edges to a welding temperature of the paper and a limited temperature that avoids overheating and scorching of the paper sheets, and means for urging the clamped jaws together, the means urging the clamping jaws together having their force coordinated with the power supply from the radio-frequency generator to the paper so that the pressure between adjacent sheets of paper is high enough to prevent flashover of the radio-frequency power between adjacent sheets.

4,061,524

ADJUSTABLE TRAVERSE TIRE BELT WINDING APPARATUS

John R. Tolan, South Bend, Ind., assignor to Milliken Research Corporation, Spartanburg, S.C.

Filed Sept. 24, 1975, Ser. No. 616,381

Int. Cl.^{2} B29H *17/28*

U.S. Cl. 156—397 **7 Claims**

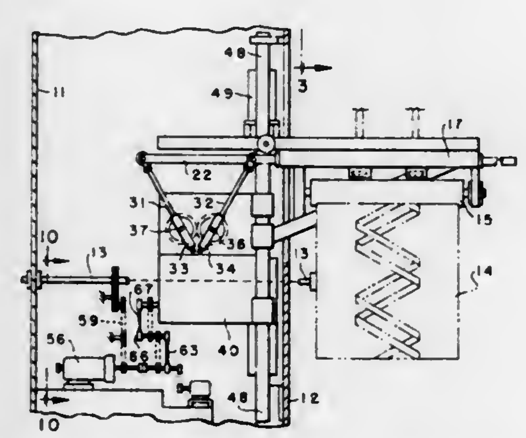

1. Apparatus for forming a tire reinforcing belt by positioning a continuous cord on a rotatable support surface in a zigzag pattern comprising:

a frame;

a support surface rotatably mounted on said frame;

means to rotate said support surface;

a traversing guide reciprocably mounted on said frame;

means for supplying cord to said support surface over said traversing guide;

a shaft mounted on said frame and adapted for rotational reciprocation about its longitudinal axis;

connecting means for reciprocating the traversing guide in response to rotational reciprocation of the shaft; and

means operably associated with the traversing guide for changing the length of travel of the traversing guide, said means for changing the length of travel of the traversing guide including a means to vary the perpendicular distance between the path of said traversing guide and said shaft.

4,061,525

TIRE BEAD COVERING APPARATUS

Raymond J. Slezak, 558 Princeton Ave., Barberton, Ohio 44203

Filed Apr. 7, 1976, Ser. No. 674,689

Int. Cl.^{2} B29H *17/22*

U.S. Cl. 156—460 **21 Claims**

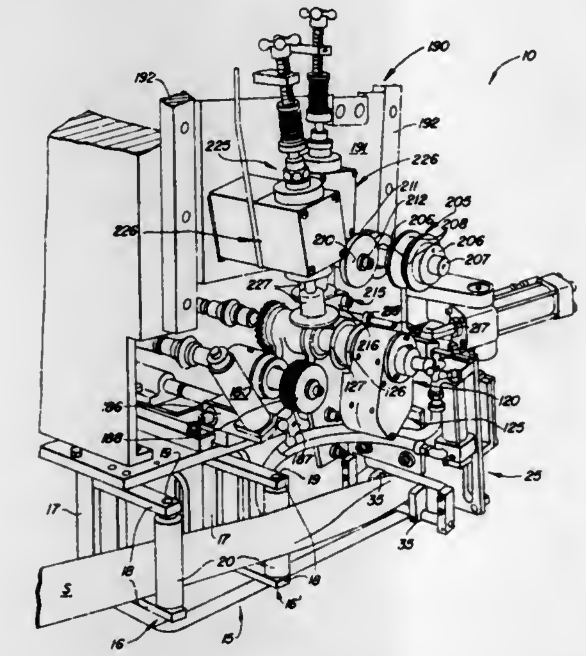

1. Apparatus for applying an elastomeric cover stock to an annular tire bead comprising, lower carriage means for supporting the tire bead, upper carriage means mounted for movement to clampingly engage the tire bead against said lower carriage means, means for rotationally driving the tire bead, roller means on said upper carriage means for adhering the cover stock to the tire bead adjustably positioned with respect to the tire bead and adjustably resiliently biased thereat, fold roller means having two opposed rollers angularly offset with respect to the tire bead passing therebetween for adhering the cover stock to the lateral extremities of the tire bead, and stock feed and severing means supplying a length of the cover stock sufficient for wrapping about the circumference of the tire bead.

4,061,526

CARTON SEALING MACHINE HAVING RELEASABLE LATCHING MEANS TO HOLD RETRACTED TAPE APPLYING MEANS WHILE ANY CARTON TRAVELS THEREPAST

Saul Warshaw, Hawley, Pa.; Winton Loveland, Fort Salonga, N.Y.; Horst J. Hanemann, Manhasset, N.Y., and Michael Ramaglia, East Patchogue, N.Y., assignors to The Loveshaw Corporation, Deer Park, N.Y.

Filed July 13, 1976, Ser. No. 704,767

Int. Cl.^{2} B32B *31/00*

U.S. Cl. 156—468 **11 Claims**

1. In a machine for sealing forwardly traveling rectangular cartons with adhering tape extending longitudinally from end to end and lapping folded stacked flaps as top and/or bottom closure means to prevent normally projecting tape applicator means from applying to such closure means of each carton excessive inward pressure which may cause such deflection thereof as to catch into and break back out an edge portion of the carton trailing back end wall; comprising

1. movably mounted tape applicator means projectable into a defined path of forward travel of a closure of folded and stacked flaps of an advancing carton and biased inward thereagainst normally for depression thereby as the carton travels forward for application of tape to such forwardly traveling closure;

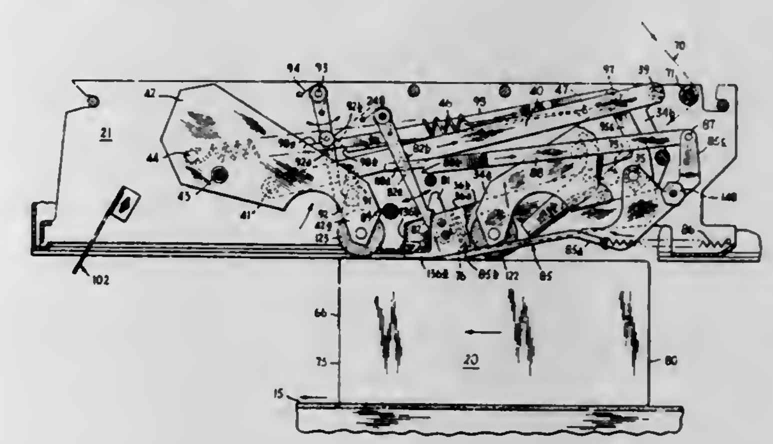

2. mechanism alternately to project and retract said tape applicator means located initially in the path of forward travel of each such carton for retractive manipulation of said inwardly biased projecting applicator means upon contact by said advancing carton;
3. releasable latch means manipulated by said mechanism to hold said tape applicator means retracted to the vicinity of the margins of the forward travel path of such carton and its closures of folded flaps while said advancing carton and its closure are traveling past said tape applicator means; and
4. means to release said latch means for restoring the projection of said tape applicator means into the carton travel path after passage of said carton.

4,061,527

APPARATUS FOR APPLYING PATCHES TO A CONTINUOUS WEB

John E. Traise, Niagara Falls, N.Y., assignor to Moore Business Forms, Inc., Niagara Falls, N.Y.

Filed Apr. 12, 1977, Ser. No. 786,775

Int. Cl.^{2} B32B *31/00;* **B31B** *1/00*

U.S. Cl. 156—519 **6 Claims**

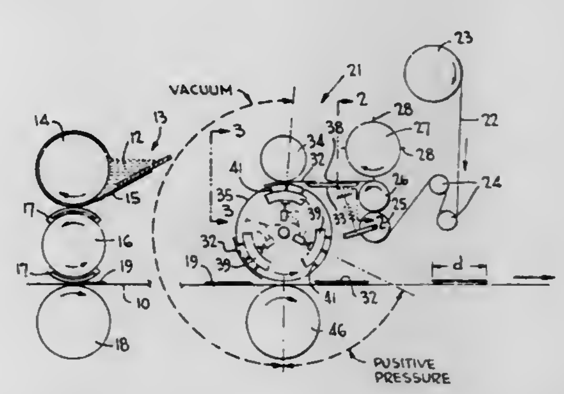

1. Apparatus for the application of patches to a moving continuous web, comprises:

means for applying adhesive to selected portions of the moving continuous web at predetermined distances apart;

means for perforating a web of patch material along transverse lines spaced predetermined distances apart, said perforating means including a pair of first rolls rotatable at

a first rate of speed, one of said first rolls having cutting blades thereon;

means for bursting said web of patch material into individual patches along said spaced lines, said bursting means including a pair of second rolls rotatable at a second rate of speed higher than said first rate of speed; and

means for transferring said patches on to said moving continuous web so as to overlie said selected portions thereof, said transferring means including one of said second rolls provided with means for retaining said patches on the circumferential surface of said one second roll and depositing each of said retained patches on to said moving continuous web in overlying relationship with said selected portions.

4,061,528

APPARATUS FOR THE MANUFACTURE OF PREFABRICATED LINED WALL SECTIONS

Hans Lingl, Neu-Ulm-Ludwigsfeld, Germany, assignor to Lingl Corporation, Paris, Tenn.

Division of Ser. No. 552,261, Feb. 24, 1975, abandoned. This application Dec. 19, 1975, Ser. No. 642,448

Claims priority, application Germany, Feb. 22, 1974, 2408484; Jan. 30, 1975, 2503685

Int. Cl.² B32B *31/20, 31/12*

U.S. Cl. 156—561 11 Claims

1. Apparatus for producing a preformed finished wall section comprising:

a. means for disposing a preformed wall panel of bricks, blocks, or the like in a generally horizontal plane, said panel being adapted to be disposed vertically when a finished wall section of which the panel is a part is in use,

b. means for arranging in a generally horizontal plane a plurality of individual tile members or the like in substantially abutting engagement with each other to form an unconnected lining panel,

c. means for applying a plurality of columns of mortar or the like on the upper surface of said wall panel,

d. means for automatically introducing spaces of predetermined uniform dimension between said tile members by moving said tile members out of substantially abutting engagement with each other, for proper disposition thereof in relationship with said wall panel,

e. means for transferring said unconnected lining panel members in groups into operative position above said wall panel, and

f. means for pressing said lining panel tile members in groups onto said wall panel, said individual members being connected to each other and said wall panel by said columns of mortar or the like thereby forming a preformed finished wall section.

4,061,529

METHOD FOR MAKING ETCH-RESISTANT STENCIL WITH DICHROMATE-SENSITIZED CASEIN COATING

Abraham Goldman, Kendall Park, and Pabitra Datta, Cranbury, both of N.J., assignors to RCA Corporation, New York, N.Y.

Filed Feb. 28, 1977, Ser. No. 772,996

Int. Cl.² C23F *1/02*

U.S. Cl. 156—644 10 Claims

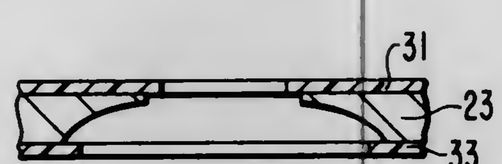

1. A method for producing an etch-resistant stencil upon a surface comprising applying to said surface a coating of a liquid composition comprising

i. acid precipitated casein, as the sole sensitizable protein material in said liquid composition,

ii. alkali dichromate photosensitizer for said casein,

iii. sodium borate, as the sole alkalizing agent in said liquid composition,

iv. and water, drying said coating, photoexposing said dry coating to a light image, developing said exposed coating to produce said stencil, and then baking said stencil in air to render said stencil etch resistant.

4,061,530

PROCESS FOR PRODUCING SUCCESSIVE STAGES OF A CHARGE COUPLED DEVICE

Harold H. Hosack, Cupertino, Calif., assignor to Fairchild Camera and Instrument Corporation, Mountain View, Calif.

Filed July 19, 1976, Ser. No. 706,867

Int. Cl.² H01L *21/306*

U.S. Cl. 156—653 2 Claims

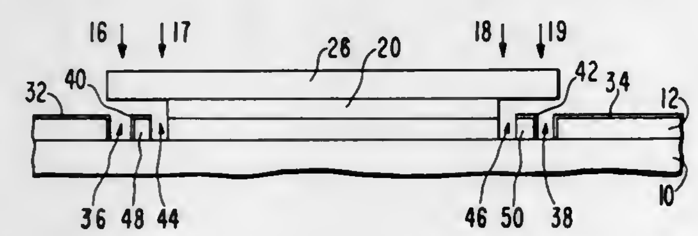

1. A process for producing successive stages of a charge coupled device on a semiconductor substrate comprising the steps of:

a. forming a layer of insulating material on a semiconductor substrate;

b. forming a layer of a conductive material on said layer of insulating material;

c. forming an etchable mask over portions of said layer of a conductive material, said etchable mask being etchable by different etches than said layer of a conductive material, said etchable mask having lateral edges disposed along selected edges of closely spaced narrow openings to be formed in said layer of a conductive material;

d. forming a layer of protective material over exposed portions of said layer of a conductive material, said layer of protective material having lateral edges which overly in one-to-one relation the lateral edges of said etchable mask;

e. etching said lateral edges of said etchable mask to expose unprotected portions of said layer of conductive material;

f. etching the exposed portions of said layer of a conductive material down to the surface of said layer of insulating material;

g. etching the exposed edges of said etchable mask a second time to expose additional unprotected portions of said layer of conductive material;

h. forming another layer of protective material over the exposed portions of said layer of conductive material;

i. etching the exposed edges of said etchable mask a third time to expose further unprotected portions of said layer of conductive material; and

j. etching the then exposed portions of said layer of conductive material down to the surface of said layer of insulating material, thereby producing narrow segments of said conductive material on said layer of insulating material.

4,061,531

COKE OVEN GAS CONTACT WITH LIQUOR CONCENTRATE

Richard Jablin, P.O. Box 514, Winchester, Va. 22601

Filed Dec. 12, 1975, Ser. No. 640,331

Int. Cl.² B01D *1/00, 1/16*

U.S. Cl. 159—48 L 7 Claims

1. A process of separating coke oven gas derived from the

destructive distillation of coal in a coke oven into its components without addition of external heat comprising:

a. feeding said gas directly from the coke oven to a primary cooler,

b. directly contacting said gas in said cooler with a liquor, derived from step (j) hereinbelow, to cool said gas, to transfer components from said gas to the liquor, and to heat said liquor,

c. withdrawing cooled gas containing remaining components as the overhead from said primary cooler,

d. passing at least a portion of said heated liquor from said cooler directly to an evaporator without addition of further heat to said heated liquor,

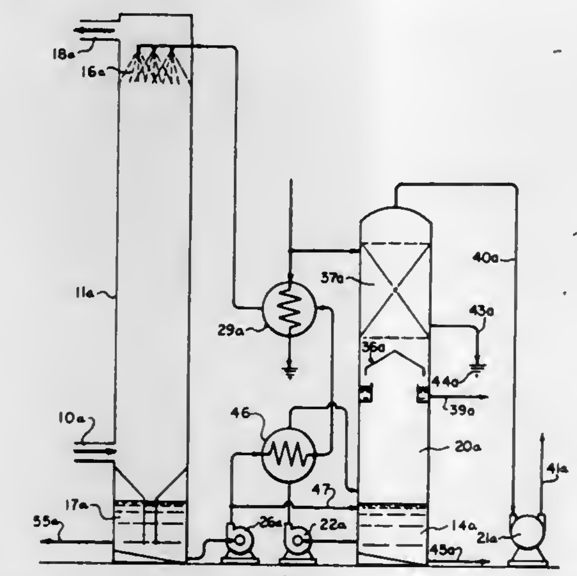

e. applying a vacuum to said liquor in said evaporator to boil said liquor and form a cooled concentrated brine and a vapor without addition of heat,

f. condensing a portion of said vapor in an indirect condenser to form a condensate and separately withdrawing said condensate and said uncondensed vapors,

g. withdrawing a portion of said brine as concentrated produce,

h. passing at least a portion of said heated liquor from said cooler to an indirect heat exchanger,

i. removing heat from said heated liquor in said heat exchanger to cool said liquor passed thereto, and

j. feeding said cooled liquor from step (i) to said primary cooler for use in step (b).

4,061,532

ADJUSTABLE SUCTION DEVICE FOR A PAPER MACHINE

Mario Biondetti, Schio, Italy, assignor to Escher Wyss GmbH, Weingarten, Germany

Filed Aug. 30, 1976, Ser. No. 718,514

Claims priority, application Switzerland, Sept. 2, 1975, 11360/75

Int. Cl.² D21F *1/54*

U.S. Cl. 162—352 11 Claims

1. A suction device for a paper machine comprising

a suction strip having a suction surface for cooperating with a wire of the paper machine and a front tip;

a carrier having said suction strip rigidly fixed thereon, said carrier being disposed transversely of the wire of the paper machine;

a pair of supports pivotally supporting said carrier about a common pivot axis extending longitudinally of said carrier and located in a plane extending through said front tip of said suction strip perpendicularly of the wire, each support being disposed at a respective end of said carrier and including a housing for mounting on the paper machine, a leaf spring rigidly fixed to said housing and vertically disposed in said plane, and a plate mounted on said carrier and secured to said leaf spring; and

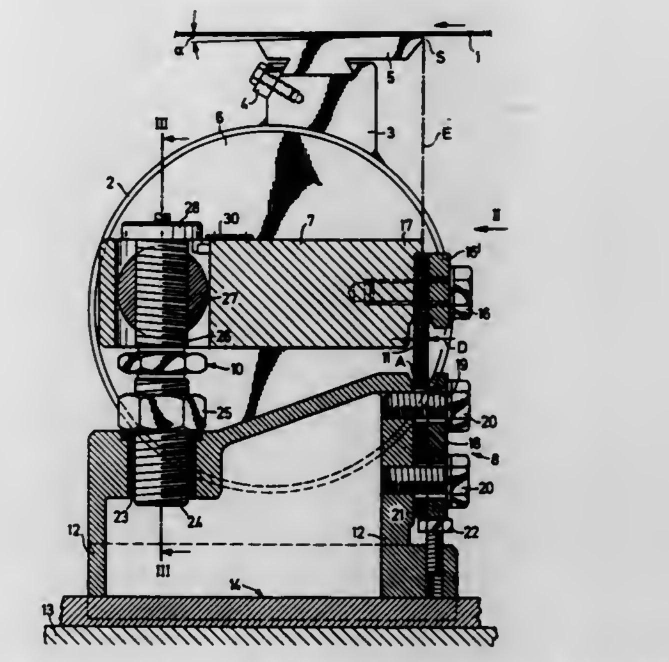

an adjustment means on at least one end of said carrier for pivoting said carrier about said common axis relative to said supports.

4,061,533

CONTROL SYSTEM FOR A NUCLEAR POWER PRODUCING UNIT

Oliver W. Durrant, Bath Township, Summit County, Ohio, assignor to The Babcock & Wilcox Company, New York, N.Y.

Filed Sept. 25, 1975, Ser. No. 616,693

Int. Cl.² G21C *7/00*

U.S. Cl. 176—20 R 15 Claims

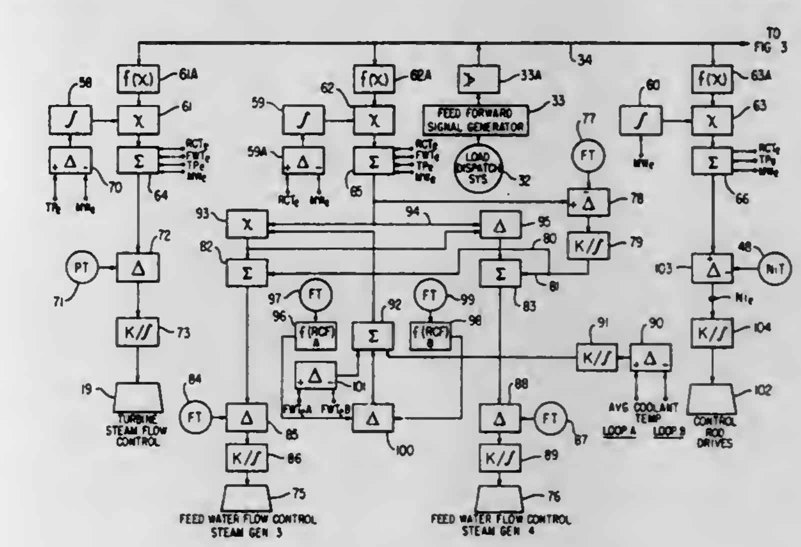

1. In a control system for a nuclear power producing unit comprising a pressurized water reactor, a once-through steam generator provided with feedwater supply means, a turbine-generator supplied with steam from the steam generator and means maintaining a flow of pressurized water through the reactor and steam generator, the combination comprising; means generating a feed forward control signal proportional to the desired power output of the power producing unit, a second means for adjusting the reactor heat release, a third means for adjusting the rate of flow of feedwater to the steam generator, said second and third means solely responsive to and operated in parallel from said feed forward control signal whereby the reactor heat release and the rate of flow of feedwater to the steam generator are each maintained in a discrete functional relationship to said feed forward control signal.

4,061,534
NUCLEAR REACTORS
George Oliver Jackson, Timperley, England, assignor to United Kingdom Atomic Energy Authority, London, England
Continuation of Ser. No. 799,834, Feb. 17, 1969, abandoned. This application Oct. 6, 1971, Ser. No. 187,183
Int. Cl.² G21C *13/00, 15/00*
U.S. Cl. 176—37 **7 Claims**

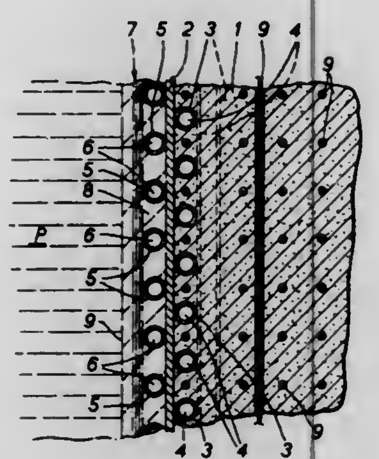

1. A nuclear reactor comprising a concrete shielding vessel with a steel lining, containing a freezable liquid metal coolant comprising the element sodium, a solid nuclear reactor core, a primary heat exchanger and a pump means all submerged in the coolant, the pump means being provided for circulating the coolant liquid within the vessel, cooling pipes within the vessel adjacent the inner surface of said vessel for effecting the freezing of the liquid coolant at the inner surface of the vessel, said cooling pipes containing a liquid metal cooling fluid, an interior wall adjacent the said inner surface, said interior wall comprising a frozen layer of the liquid coolant on and supported by the cooling pipes and the inner surface of the vessel, the said frozen layer interior wall being thin relative to the overall cross-section of the vessel.

4,061,535
INDUSTRIAL TECHNIQUE
John Howard Nolan; Donald Lawrence Goddard, and Barrett John Short, all of Lynchburg, Va., assignors to The Babcock & Wilcox Company, New York, N.Y.
Filed Mar. 25, 1976, Ser. No. 670,314
Int. Cl.² G21C *9/00*
U.S. Cl. 176—38 **6 Claims**

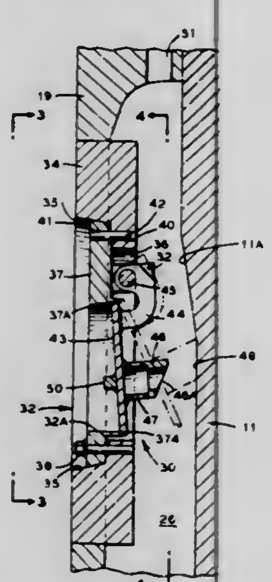

1. An energy absorbing pressure relief valve for a core support cylinder of a nuclear reactor comprising a valve body for fluid flow therethrough having portions defining a fluid passageway, hinge means attached to the body, a plate suspended from the hinge means in sealing engagement with the passageway, an energy absorbing deformable member mounted on the plate and extending outwardly therefrom, the deformable member including a partially annular column open at its outwardly extending end and orifice means through the walls of said annular column.

4,061,536
FUEL ASSEMBLY FOR NUCLEAR REACTORS
Robert J. Creagan, Pitcairn, and Erling Frisch, Pittsburgh, both of Pa., assignors to The United States of America as represented by the United States Energy Research and Development Administration, Washington, D.C.
Continuation of Ser. No. 721,122, April 12, 1968, abandoned, which is a continuation of Ser. No. 552,976, May 25, 1966, abandoned. This application Nov. 6, 1972, Ser. No. 304,292
Int. Cl.² G21C *3/34*
U.S. Cl. 176—78 **2 Claims**

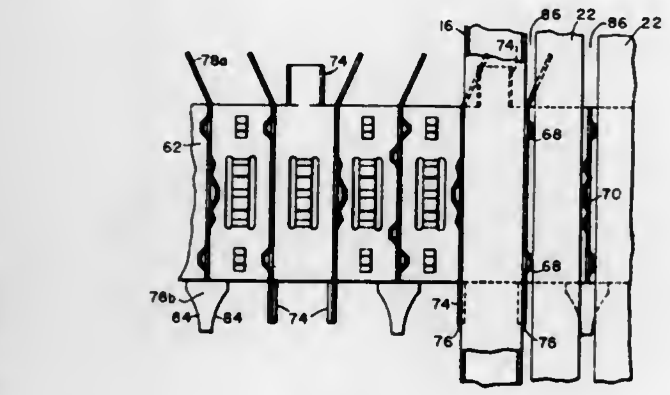

1. A fuel assembly for a nuclear reactor comprising:
a plurality of fuel elements disposed in a parallel array;
multiple hollow control rod guide tubes positioned in a predetermined pattern among said fuel elements;
a plurality of grids of egg-crate configuration having openings therein through which said fuel elements and guide tubes extend for imparting lateral support thereto;
said plurality of grids including top and bottom grids respectively located adjacent the top and bottom of said assembly, and at least one grid intermediate said top and bottom grids;
said grids except said top and bottom grids including coolant mixing vanes thereon which impart a mixing action to coolant adapted to flow upwardly through the assembly;
means securing each of said guide tubes to said grids;
flow apertured plate means adjacent opposite ends of said fuel elements and guide tubes, said plate means at one end supporting said fuel elements and guide tubes and at the other end supporting said guide tubes;
a common header holding multiple control rods designed for telescopic and longitudinal movement in the corresponding guide tubes.

4,061,537
POLYIONIC ISOTONIC SALT SOLUTION
Fritz Seiler, Marburg an der Lahn, and Andreas Michael Schwarzbeck, Mannheim, both of Germany, assignors to Behringwerke Aktiengesellschaft, Marburg an der Lahn, Germany
Filed July 16, 1976, Ser. No. 705,816
Claims priority, application Germany, July 18, 1975, 2532183
Int. Cl.² C12B *3/00;* **C12K** *1/10*
U.S. Cl. 195—1.7 **2 Claims**

1. In a polyionic aqueous salt solution adaptable to the preservation of erythrocytes and of organs for transplantation and to maintaining the viability of microorganisms, said solution comprising physiologically tolerable cations and anions, the improvement wherein said solution comprises potassium ions at a concentration equal to or greater than 80 mval per liter, comprises magnesium ions at a concentration equal to or greater than 1.7 mval per liter, and which comprises, as anions, a total concentration between 90 mval per liter and 160 mval per liter of chloride, sulfate, phosphate, and anions of an organic aliphatic fatty acid or of an aliphatic hydroxy acid, the concentration of chloride anions being at most 100 mval per liter.

4,061,538
ENZYMATICALLY OXIDIZING INTERFERON
Friedrich Dorner, Vienna; Marianne Scriba, Maria Enzerdorf, and Rudolf Weil, Vienna, all of Austria, assignors to Sandoz Ltd., Basel, Switzerland
Continuation-in-part of Ser. No. 456,702, April 1, 1974, abandoned. This application Feb. 6, 1975, Ser. No. 547,782
Claims priority, application Switzerland, Apr. 4, 1973, 4801/73; Apr. 4, 1973, 4802/73
Int. Cl.² C12D *13/06;* **C07B** *29/02*
U.S. Cl. 195—29 **3 Claims**

1. A process for the production of a structurally modified interferon, comprising enzymatically oxidising the terminal galactose unit in asialointerferon with galactose oxidase and recovering the modified interferon.

4,061,539
PREPARATION AND USE OF GLUCOSE ISOMERASE
Chin Kee Lee, Winston-Salem, N.C., assignor to R. J. Reynolds Tobacco Company, Winston-Salem, N.C.
Filed Oct. 20, 1976, Ser. No. 734,222
Int. Cl.² C12D *13/10*
U.S. Cl. 195—31 F **7 Claims**

1. A process for preparing a glucose-isomerizing enzyme which comprises cultivating a microorganism belonging to the species *Flavobacterium arborescens* in a nutrient medium under conditions suitable for production of said enzyme by said microorganism and recovering said enzyme.

4,061,540
CHOLESTEROL OXIDAZE AND PROCESS FOR PREPARING SAME
Fumihiko Yoshida, Matsudo; Kiyoshi Mizusawa, and Kazuo Nakamura, both of Noda, all of Japan, assignors to Kikkoman Shoyu Co., Ltd., Noda, Japan
Filed June 29, 1976, Ser. No. 700,859
Claims priority, application Japan, July 4, 1975, 50-81935
Int. Cl.² C12D *13/10*
U.S. Cl. 195—62 **10 Claims**

1. Cholesterol oxidase which is produced by a microorganism belonging to the species *Corynebacterium cholesterolicum,* has a molecular weight of 57,000 as measured by Weber's SDS disk electrophoresis, and oxidizes the hydroxyl group attached to the 3β-position of steroids and exerts no action upon the hydroxyl groups attached to other positions nor upon esters.

4,061,541
PREPARATION OF ALKALINE ALPHA-AMYLASE
Ernest Wendell Boyer, and Morton Blakeman Ingle, both of Elkhart, Ind., assignors to Miles Laboratories, Inc., Elkhart, Ind.
Filed Mar. 12, 1971, Ser. No. 123,880
Int. Cl.² C07G *7/028*
U.S. Cl. 195—66 R **1 Claim**

1. A process for the production of an alpha-amylase having maximum activity at a pH value from 9 to 9.2 and at about 50° C. comprising growing under aerobic conditions and at a pH from about 8 to about 10 a culture of *Bacillus* species NRRL B-3881 in a medium containing appropriate nutrients and then recovering the enzyme therefrom.

4,061,542
2-METHYL-L-ARGININE PRODUCED BY CULTIVATING STREPTOMYCES STRAIN
Thomas Casimir Demny, Livingston, and Hubert Maehr, Belleville, both of N.J., assignors to Hoffmann-La Roche Inc., Nutley, N.J.
Filed Mar. 8, 1976, Ser. No. 664,834
Int. Cl.² C12D *9/14*
U.S. Cl. 195—80 R **2 Claims**

1. A process for producing a compound of the formula:

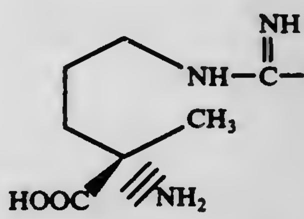

which comprises cultivating a strain of Streptomyces X-11837 in an aqueous carbohydrate solution containing a nitrogenous nutrient under submerged aerobic conditions until activity versus Escherichia Coli B is imparted to said solution and then recovering said compound from said solution.

4,061,543
BIOASSAY FOR DRUGS AND ANTIBIOTICS
Charles P. Bean, Schenectady, N.Y.; Roy J. King, Jr., San Mateo, Calif., and Egidijus E. Uzgiris, Schenectady, N.Y., assignors to General Electric Company, Schenectady, N.Y.
Filed Mar. 19, 1976, Ser. No. 668,606
Int. Cl.² C12K *1/00*
U.S. Cl. 195—103.5 K **6 Claims**

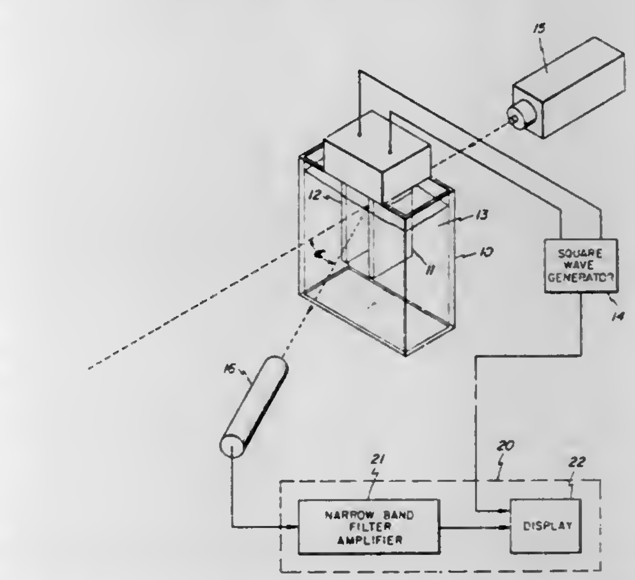

1. A method of performing a bioassay to test for effectiveness of medicinal substances upon cell mobility comprising:
suspending biological cells to be monitored in isotonic sucrose solution substantially in the range of .02 to .001 Normal sodium chloride;
establishing an electric field across at least a portion of said solution;
introducing into said solution over a finite period of time a medicinal substance to be examined for efficacy;
irradiating said solution within said electric field with a beam of coherent light;
detecting light scattered by at least some of said cells suspended in said solution;
varying amplitude of said electric field as said medicinal substance to be evaluated encounters said cells suspended in said solution so as to maintain at maximum a signal corresponding to a predetermined frequency difference between the incident beam of coherent light and said light scattered by at least some of said cells suspended in said solution; and
measuring the resulting changes in electric field amplitude required to maintain said signal at maximum.

4,061,544
APPARATUS FOR PROVIDING WASTE GAS RECIRCULATION IN COKE OVEN BATTERIES
Joseph van Ackeren, Allison Park, and Edward J. Helm, Pittsburgh, both of Pa., assignors to Koppers Company, Inc., Pittsburgh, Pa.
Filed May 3, 1976, Ser. No. 682,562
Int. Cl.² C10B *5/02, 5/12, 43/12*
U.S. Cl. 202—141 **4 Claims**

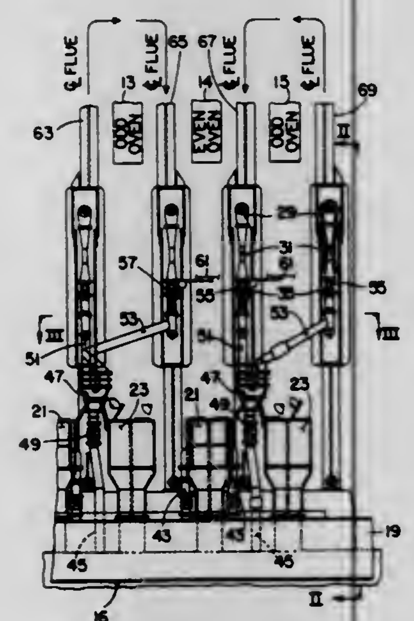

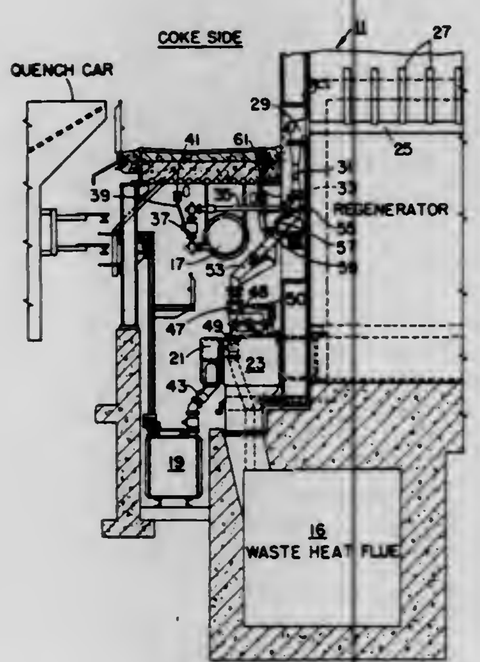

1. In a gun flue type coke oven battery having a plurality of heating chambers, heating walls having flues therein, a plurality of internal fuel conduit means adapted to carry a gaseous fuel into the flues of each heating wall for burning therein and means for conducting the waste gases of combustion to a regenerator for regenerating said gases by reclaiming heat therefrom, the improvement comprising:

a. a plurality of first conduit means carrying fuel gas into a preselected internal conduit means for the flues for said heating walls, said first conduit means being disposed outside of said battery, said first conduit means including control means for selectively diverting the fuel gas to a selected first conduit means,

b. a plurality of second conduit means adapted to carry said regenerated waste gas into said first conduit means, said second conduit means being disposed outside of said battery,

c. a third conduit means communicating with a reservoir means disposed outside said battery for receiving said regenerated gas from said regenerating means and with said second conduit means, said third conduit means including control means for selectively diverting the flow of regenerated gas to a preselected second conduit means; and

d. means for aspirating said regenerated gas with said fuel gas.

4,061,545
POLYMERIZATION INHIBITOR FOR VINYL AROMATIC COMPOUNDS
James M. Watson, Big Spring, Tex., assignor to Cosden Technology, Inc., Big Spring, Tex.
Filed Feb. 19, 1976, Ser. No. 659,570
Int. Cl.² B01D *3/34;* **C07C** *15/10*
U.S. Cl. 203—9 **8 Claims**

1. A process for the distillation of a readily polymerizable vinyl aromatic compound selected from the group consisting of styrene, substituted styrene, divinylbenzene and mixtures thereof, which comprises subjecting said compound to distillation conditions in the presence of an effective amount of a combination of phenothiazine ($C_{12}H_9NS$) and tertiarybutylcatechol (TBC) as a polymerization inhibitor system in the presence of oxygen.

4,061,546
PURIFICATION OF ACETIC ACID
Thomas C. Singleton, Texas City, Tex., assignor to Monsanto Company, St. Louis, Mo.
Filed Mar. 29, 1976, Ser. No. 671,233
Int. Cl.² B01D *3/34*
U.S. Cl. 203—31 **6 Claims**

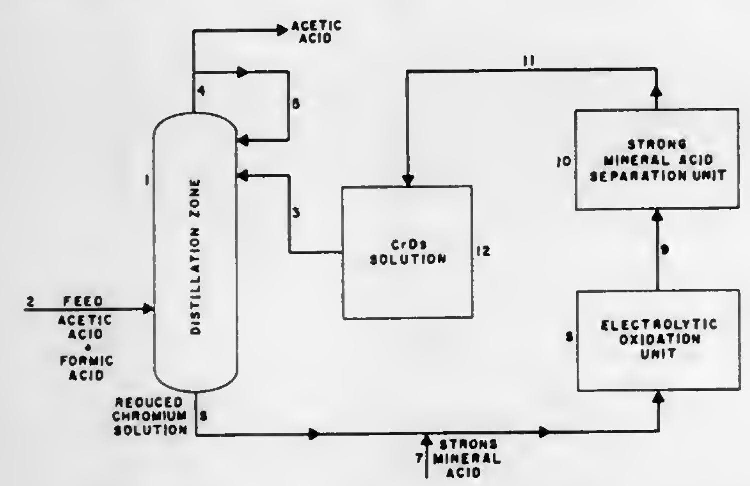

1. The method for removing formic acid from acetic acid which consists essentially of introducing acetic acid substantially free of halide impurities but containing a minor amount of formic acid into a distillation zone below the midpoint thereof, introducing a compound of hexavalent chromium dissolved in a solvent selected from the group consisting of acetic acid, water and mixtures of acetic acid and water into the upper one-third of said distillation zone, the bottoms temperature of said column being maintained below about 160° C, removing overhead from said distillation zone an acetic acid stream containing less than 100 ppm of formic acid and removing from the bottom of said distillation zone a stream comprising acetic acid and the compound of chromium in its reduced state.

4,061,547
ACIDIC PLATING BATH AND ADDITIVES FOR ELECTRODEPOSITION OF BRIGHT TIN
William E. Rosenberg, Strongsville, Ohio, assignor to Columbia Chemical Corporation, Cleveland, Ohio
Continuation-in-part of Ser. No. 593,311, July 7, 1975, Pat. No. 3,977,949. This application July 21, 1976, Ser. No. 707,437
Int. Cl.² C25D *3/32*
U.S. Cl. 204—54 R **21 Claims**

1. A primary tin plating brightening additive, comprising:

a substituted naphthalene carboxaldehyde of the following general formula:

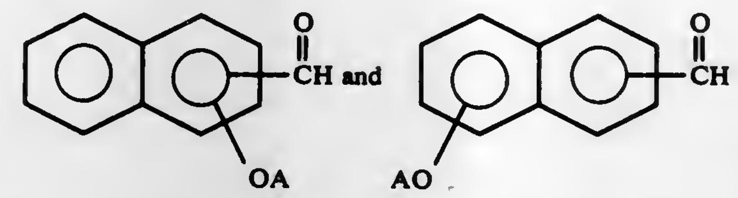

where O is oxygen and where A is selected from the class consisting of hydrogen, hydroxy alkyl, polyalkoxy and 3-sulfopropyl, said alkyl containing from 2 to 8 carbon atoms, said polyalkoxy containing from 2 or 3 carbon atoms in the repeating unit wherein the number of repeating units ranges from 2 to about 40 per molecule, and said 3-sulfopropyl compound having the formula $—CH_2CH_2CH_2SO_3Z$ where Z is selected from the class consisting of hydrogen, Group 1A, and Group 2A of the Periodic Table, including from 1 to about 97 percent of at least one alpha unsaturated compound selected from the group consisting of carboxylic acids, amides, and esters for producing bright electrodeposits of tin from an aqueous acid plating bath.

4. An aqueous, acid tin electroplating bath containing stannous ions and sulfuric acid, comprising:

having dissolved therein as a brightener compound about 0.01 to about 0.2 grams/liter of a substituted naphthalene carboxaldehyde of the following general formula:

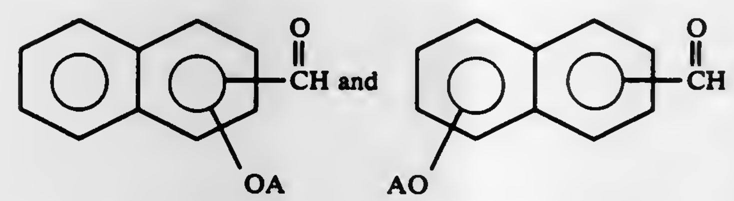

where O is oxygen and where A is selected from the group consisting of hydrogen, hydroxy alkyl, polyalkoxy and 3-6 sulfopropyl, said alkyl having from 2 to 8 carbon atoms, said polyalkoxy containing 2 or 3 carbon atoms in the repeating unit wherein the number of repeating units ranges from 2 to about 40 per molecule, and said 3-sulfopropyl compound having the formula $—CH_2CH_2CH_2SO_3Z$ where Z is selected from the class consisting of hydrogen, Group 1A, and Group 2A of the Periodic Table.

4,061,548
ELECTROLYTIC HYDROQUINONE PROCESS
Glenn C. Jones, and Ronald H. Meen, both of Kingsport, Tenn., assignors to Eastman Kodak Company, Rochester, N.Y.
Filed June 7, 1976, Ser. No. 693,451
Int. Cl.² C25B *3/02*
U.S. Cl. 204—78 **3 Claims**

1. In the process for the electrochemical oxidation of phenol to hydroquinone in an aqueous medium at a lead or lead-thallium alloy anode in an undivided cell, the improvement which comprises the inclusion in the aqueous medium of at least 50 ppm. of chromium ion.

4,061,549
ELECTROLYTIC CELL ANODE STRUCTURES CONTAINING COBALT SPINELS
Mark Jonathan Hazelrigg, Jr., and Donald Lee Caldwell, both of Lake Jackson, Tex., assignors to The Dow Chemical Company, Midland, Mich.
Filed July 2, 1976, Ser. No. 702,251
Int. Cl.² C25B *1/14, 11/04*
U.S. Cl. 204—98 **20 Claims**

1. An anode material for use in electrolytic cells, said material comprising

an electroconductive substrate having coated thereon an effective amount of a bimetal oxide spinel having the formula $M_xCo_{3-x}O_4$ where $O<X\leq 1$ and M is a metal selected from Groups IB, IIA, and IIB of the Periodic Table of the Elements.

10. In electrolytic chlorine cells containing anodes and cathodes separated by aqueous NaCl electrolyte, said electrolyte being divided into catholyte and anolyte sections by membrane or diaphragm means, the improvement which comprises anode embodiments characterized as being electroconductive substrates having coated thereon an effective amount of bimetal spinel, $M_xCo_{3-x}O_4$, where X has a value of from about 0.1 to 1.0 and where M is a metal selected from the group consisting of metals of Groups IB, IIA, and IIB.

4,061,550
PROCESS FOR ELECTROLYSIS
Edward H. Cook, Jr., Lewiston, and Alvin T. Emery, Youngstown, both of N.Y., assignors to Hooker Chemicals & Plastics Corporation, Niagara Falls, N.Y.
Division of Ser. No. 388,702, Aug. 15, 1973. This application Oct. 10, 1975, Ser. No. 621,459
Int. Cl.² C25B *1/16, 1/26*
U.S. Cl. 204—98 **13 Claims**

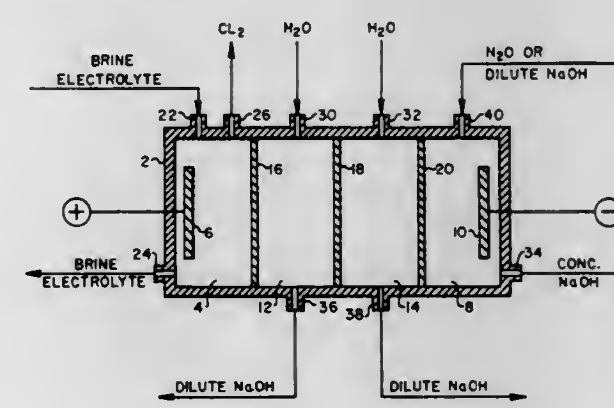

1. A process for the electrochemical decomposition of an aqueous solution of an ionizable chemical compound selected from the group consisting of alkali metal halides and hydrochloric acid, which process comprises introducing an aqueous solution of said ionizable chemical compound into the anode compartment of an electrolytic cell; wherein said electrolytic cell comprises a cell body having an anode compartment containing an anode, a cathode compartment containing a cathode, and at least two buffer compartments therebetween, said anode compartment being separated from the next adjacent buffer compartment by a barrier which is substantially impervious to fluids and gases, said barriers being a membrane selected from the group consisting of a hydrolyzed copolymer of a perfluorinated hyrocarbon and a sulfonated perfluorovinyl ether, and a sulfostyrenated perfluorinated ethylene propylene polymer, said cathode compartment being separated from the next adjacent buffer compartment by a porous diaphragm; introducing a second aqueous solution into said buffer and cathode compartments, and effecting the electrolytic decomposition of said ionizable solution by passing an electric current between the anode and cathode of said cell.

4,061,551
PROCESS FOR EXTRACTION OF GALLIUM FROM ALKALINE GALLIUM-CONTAINING SOLUTIONS
Raisa Vasilievna Ivanova, ulitsa Udaltsova, 14, kv. 181; Arkady Andreevich Belsky, ulitsa Udaltsova, 14, kv. 65; Nikolai Alexandrovich Novikov, ulitsa Korolenko, 4/14, kv. 10; Nina Nikolaevna Alexeeva, ulitsa Obrucheva, 28, korpus 3, kv. 206; Ljudmila Nikolaevna Nikitina, Berezhkovskaya naberezhnaya, 12, kv. 323; Nina Andreevna Ljubimova, 11 Parkovaya ulitsa, 44, korpus 4, kv. 36, all of Moscow, and Anna Evgenievna Dotsenko, prospekt Lenina, 66, kv. 23, Balashikha, Moskovskoi oblasti, all of U.S.S.R.
Filed Aug. 15, 1975, Ser. No. 604,952
Int. Cl.[2] C25C *1/22*
U.S. Cl. 204—105 R **9 Claims**

1. A process for the extraction of gallium from alkaline gallium-containing solutions comprising electrochemically reducing gallium on a liquid metal selected from the group consisting of gallium, an alloy of gallium and aluminum and an alloy of gallium, aluminum and zinc in an alternating electromagnetic field having an intensity of 1500 - 500,000 A/m.

4,061,552
ELECTROLYTIC PRODUCTION OF COPPER FROM ORES AND CONCENTRATES
Peter Kenneth Everett, Chatswood, Australia, assignor to Dextec Metallurgical Proprietary Limited, Australia
Filed Feb. 2, 1976, Ser. No. 654,391
Claims priority, application Australia, Feb. 14, 1975, 0615/75
Int. Cl.[2] C25C *1/12*
U.S. Cl. 204—107 **9 Claims**

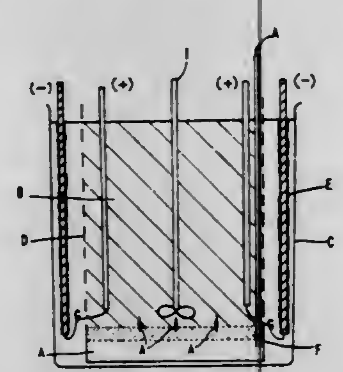

1. A process for extracting copper from a copper and iron bearing ore or concentrate and concomitantly plating out the extracted copper at the cathode of an electrochemical diaphragm cell which comprises forming a slurry of the ore or concentrate with an electrolyte in the anode compartment of the electrochemical diaphragm cell, intimately mixing finely dispersed oxygen bearing gas with the slurry and maintaining the slurry and the mixture at substantially atmospheric pressure throughout the process and at a temperature of from 50° C to the boiling point of the electrolyte, said electrolyte containing chloride ions in a concentration between that sufficient to maintain in solution any cuprous ions present and saturation, and passing current between the anode and cathode at a rate such that the hydrogen ions liberated at the anode maintain a pH of between 1.5 and less than 7.0 in the electrolyte throughout the process, whereby the iron solubilized in the process is substantially simultaneously precipitated as ferric oxide and sulphide sulphur oxidised under the conditions is substantially converted to elemental form and the copper is plated at the cathode.

4,061,553
ELECTROPLATING APPARATUS AND METHOD
Robert W. Alexander, Columbia, and John G. Keck, Lexington, both of S.C., assignors to Carolina Steel & Wire Corporation, Lexington, S.C.
Filed Dec. 3, 1976, Ser. No. 747,223
Int. Cl.[2] C25C *1/16;* C25B *11/10;* C25D *17/12*
U.S. Cl. 204—114 **6 Claims**

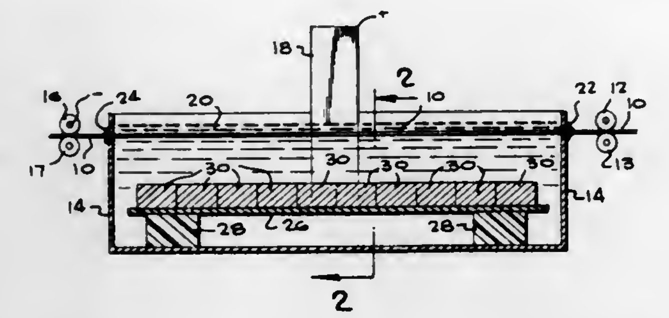

1. A zinc plating process for plating zinc on a metallic substrate comprising the steps of positioning the substrate in an electrolytic bath containing an ionized zinc salt, positioning an anode support means formed substantially of zirconium in the electrolytic bath, positioning zinc anode means on the anode support means and connecting a source of direct current across the anode support and the substrate to effect a plating operation onto the substrate.

4,061,554
ELECTROCHEMICAL METHOD FOR PRODUCING OXYGEN
Nicole Chillier-Duchatel, Sevres, and Bernard Verger, Chevreuse, both of France, assignors to Societe Generale de Constructions Electriques et Mecaniques "Alsthom et Cie", Paris, France
Filed Apr. 14, 1976, Ser. No. 676,751
Claims priority, application France, Apr. 24, 1975, 50.12848
Int. Cl.[2] C25B *1/02*
U.S. Cl. 204—129 **12 Claims**

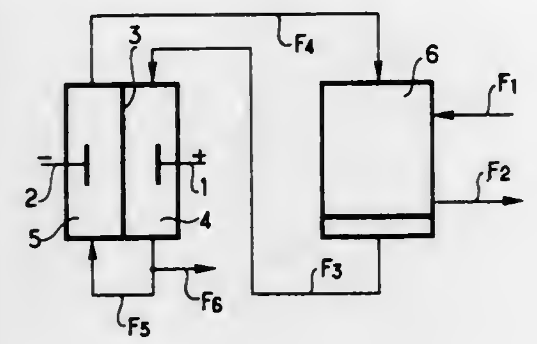

1. Electrochemical method for producing oxygen, comprising successively:
reacting air in a basic medium with the reduced form of the anthraquinone 2–7 disulphonate of an alkali metal to form a peroxide which spontaneously decomposes into (i) hydrogen peroxide and (ii) the oxidised form of said anthraquinone;
electrochemically oxidising said hydrogen peroxide to form oxygen;
recovering said oxygen;
electrochemically reducing said oxidised form of said anthraquinone to regenerate said reduced form of said anthraquinone; and
recycling said reduced form, to react with said air.

4,061,555
WATER PHOTOLYSIS APPARATUS
Kazuo Miyatani, Tokyo, and Isao Sato, Kodaira, both of Japan, assignors to RCA Corporation, New York, N.Y.
Filed Jan. 19, 1977, Ser. No. 760,551
Int. Cl.[2] C25B *9/00, 11/02, 1/02*
U.S. Cl. 204—242 **7 Claims**

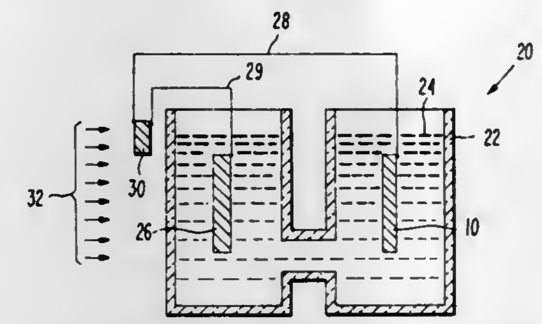

1. A cathode capable of being utilized in a photolysis apparatus comprising:
a nickel substrate; and
a nickel monoxide layer on said nickel substrate with a plurality of spaced apart grooves, said grooves extending through said nickel oxide layer and into said nickel substrate.
3. A photolysis apparatus comprising:
a housing;
an aqueous basic electrolyte solution in said housing;
a photocatalytic semiconductor anode in said housing and contacting said solution;
a cathode in said housing and contacting said solution, wherein said cathode is comprised of a nickel substrate and a nickel monoxide layer on said nickel substrate surfaces, and further having a plurality of spaced apart grooves, said grooves extending through said nickel oxide layer and exposing said nickel substrate; and
an electrical biasing means in series with said anode and cathode.

4,061,556
PORTABLE ELECTROLYTIC APPARATUS FOR PURIFYING DRINKING WATER
August Reis, Munich; Fritz Fend, Regensburg, and Karl Hils, Hambach, all of Germany, assignors to Sachs-Systemtechnik GmbH, Schweinfurt am Main, Germany
Filed Mar. 10, 1977, Ser. No. 776,238
Claims priority, application Germany, Mar. 10, 1976, 2609846
Int. Cl.[2] C02B *1/82*
U.S. Cl. 204—271 **11 Claims**

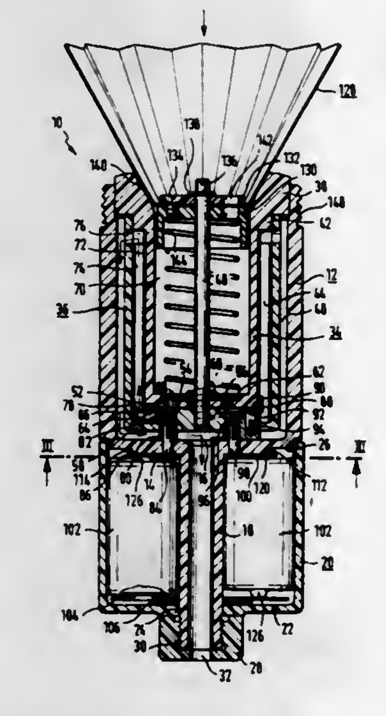

1. Apparatus for purifying drinking water comprising:
a. a housing having first and second terminal parts;
b. means for setting up said housing in an operating position in which said first part is upwardly offset from said second part,
1. said housing defining therein a receiving chamber and an electrolytic cell,
2. said chamber communicating with an upwardly open filling aperture in said first part;
c. first conduit means connecting a bottom portion of said chamber downwardly spaced from said filling aperture with an inlet portion of said cell;
d. second conduit means connecting an outlet portion of said cell upwardly spaced from said inlet portion, but lower than said filling aperture in said operating position, with a discharge aperture in said second part,
1. said chamber, said cell, and said first and second conduit means defining a continuous path of liquid flow from said filling aperture to said discharge aperture,
2. said path extending downwardly in said chamber, upwardly in said cell, and downwardly in said second conduit means;
e. two electrodes in said cell offset from said path in opposite, transverse directions; and
f. supply means for supplying direct current to said electrodes for passage of the current in said cell through liquid flowing in said path.

4,061,557
ASSEMBLY OF ELECTRODES
Kazuo Nishizawa; Ken Higashitsuji, and Yuji Mori, all of Kyoto, Japan, assignors to Marubishi Yuka Kogyo Kabushiki Kaisha and Kazuo Nishizawa, both of Kyoto, Japan
Filed May 19, 1975, Ser. No. 578,981
Claims priority, application Japan, May 24, 1974, 49-057927; Oct. 19, 1974, 49-119888
Int. Cl.[2] C25B *9/00, 9/02;* C25C *7/00, 7/02*
U.S. Cl. 204—277 **3 Claims**

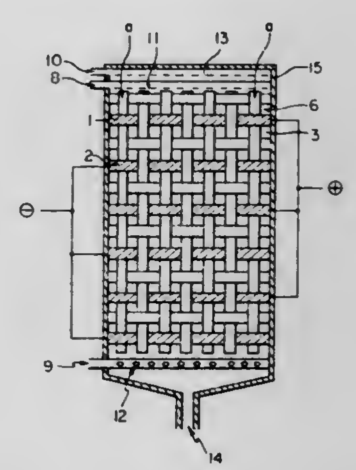

1. A fabric suitable for use as an electrode in electrochemical processes which comprises a woven or knitted fabric of a non-conductive material wherein a plurality of flexible elongated and anodic and cathodic conductive elements are incorporated so as to be substantially parallel, the adjacent conductive elements being separated from one another by said fabric forming non-conductive material, a first lead means for connecting at least one of said anodic conductive elements with the positive pole of a DC source and a second lead means for connecting at least one of the cathodic conductive elements with the negative pole of said DC source.

4,061,558
ELECTRODE

Shunjiro Saito; Kazuhide Aue, and Nobuei Shimojo, all of Tokyo, Japan, assignors to TDK Electronics Co., Ltd., Tokyo, Japan

Filed June 9, 1976, Ser. No. 694,467
Claims priority, application Japan, June 9, 1975, 50-69392
Int. Cl.2 C25B *11/08, 11/10*

U.S. Cl. 204—290 F **7 Claims**

1. An electrode which comprises a conductive substrate coated with a composition consisting essentially of from 5–40 mole percent palladium oxide 2–10 mole percent ruthenium oxide, and 93–50 mole percent of tin oxide and titanium oxide, wherein the titanium oxide is less than 40 percent of the tin oxide.

4,061,559
ELECTROLYTIC CELL AND CIRCULATING METHOD FOR ELECTROLYTE

Tatsuzo Kitamura, Yokohama, and Haruji Inaba, Hachiohji, both of Japan, assignors to Mitsui Mining & Smelting Co., Ltd., Nihonbashi-Muromachi, Japan

Filed Apr. 23, 1976, Ser. No. 679,859
Claims priority, application Japan, Sept. 11, 1975, 50-110368
Int. Cl.2 C25C *1/12, 7/00, 7/06*

U.S. Cl. 204—106 **5 Claims**

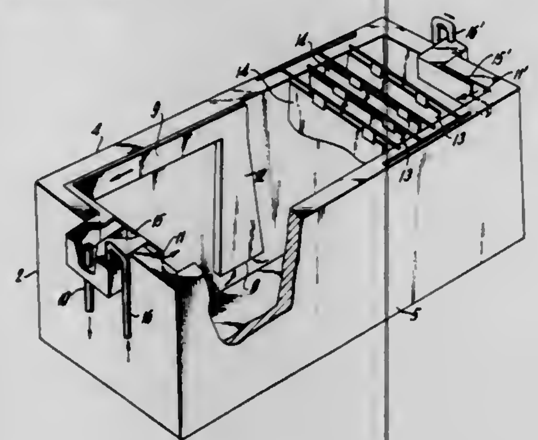

1. A method of circulating an electrolyte in the electrolytic refining of copper in which plates of pure copper are electrodeposited on a cathode surface and anode plates of crude copper are dissolved in the electrolyte while using a current density of more than 250 A/m^2, comprising the following steps:

A. dividing the circulating electrolyte into two supply streams of substantially equal volume and flow rate;
B. introducing each stream to a cell of substantially rectangular cross section at a flow rate of more than 15 l/min. from opposed corners of a longer side wall of the cell, said flow rate being such as to minimize flotation of resulting slime and copper concentration dispersion; and
C. discharging the electrolyte at a flow rate of more than 30 l/min. from a discharge port situated at a central part on the inner surface of the opposed longer side wall thereof.

4,061,560
APPARATUS FOR DEFLECTION ELECTROPHORESIS

Kurt Hannig, Krailling, and Hanns Wirth, Hohenpeissenberg, both of Germany, assignors to Max-Planck-Gesellschaft zur Forderung der Wissenschaften e.V., Gottingen, Germany

Filed Feb. 27, 1976, Ser. No. 662,089
Claims priority, application Germany, Feb. 28, 1975, 2508844
Int. Cl.2 G01N *27/26*

U.S. Cl. 204—299 R **12 Claims**

1. In apparatus for performing a continuous, free-film deflection electrophoresis procedure, the apparatus including: means defining a separating chamber having two spaced parallel walls delimiting opposite boundaries of a separating chamber gap, and two electrode chambers each disposed adjacent a respective opposite, lateral edge of the gap; two ion transmitting membranes each separating a respective electrode chamber from the separating chamber gap; first supply means for supplying a buffer solution to one end of the gap so that the solution flows in the form of a thin layer through the gap; second supply means disposed downstream of the first supply means for introducing into the thin buffer solution layer a spatially narrowly defined stream of a sample mixture; voltage applying means arranged to produce an electric separating field extending transversely to the direction of buffer solution flow and parallel to the two spaced walls for causing the sample stream to be divided into fractions as it traverses the length of the gap, the voltage applying means being composed of two electrodes each disposed in a respective one of the electrode chambers; and means for analyzing such fractions, the im-

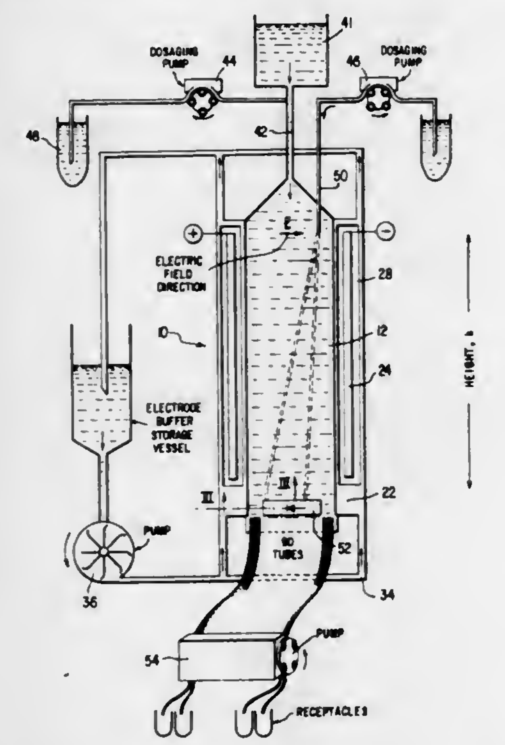

provement wherein said apparatus comprises third supply means for introducing controlled quantities of an adjuvant fluid into the buffer solution upstream of the point of introduction of the sample mixture into the buffer solution layer, and wherein said means for analyzing comprises: a light source disposed to one side of said separating chamber gap; and a series of photodiodes disposed to the other side of said separating chamber gap and extending transversely to the direction of buffer solution flow through said gap; a shift register having a plurality of stages each operatively coupled to a respective one of said photodiodes in a manner to permit each said stage to store signals corresponding to the radiation energy impinging on the associated photodiode, and an interrogation device operatively coupled to said shift register for serially reading out such stored signals.

4,061,561
AUTOMATIC MULTIPLE-SAMPLE APPLICATOR AND ELECTROPHORESIS APPARATUS

James C. Fletcher, Administrator of the National Aeronautics and Space Administration, with respect to an invention of, and Benjamin W. Grunbaum, Moraga, Calif.

Filed Nov. 24, 1976, Ser. No. 744,574
Int. Cl.2 G01N *27/26*

U.S. Cl. 204—299 R **12 Claims**

1. An electrophoresis tank, comprising:
means for holding a sample-supporting medium;
a multiple-sample applicator means, including individually operable multiple-sample applicators having tips for holding fluid samples to be analyzed;
a cover for said tank adapted to receive said applicator tips through corresponding openings therein; and
means coacting with said multiple-sample applicators for releasing said applicators simultaneously, to thereby per-

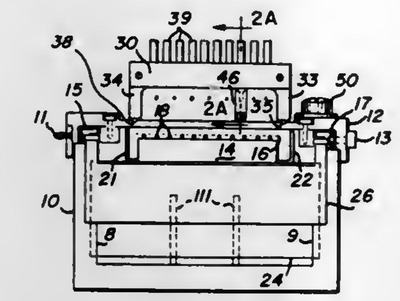

mit said applicators to fall by force of gravity into said tank to thereby contact said sample-supporting medium.

4,061,562
THERMAL CRACKING OF HYDRODESULFURIZED RESIDUAL PETROLEUM OILS

Joel Drexler McKinney; Raynor T. Sebulsky, both of Pittsburgh, and Francis Edmund Wynne, Jr., Allison Park, all of Pa., assignors to Gulf Research & Development Company, Pittsburgh, Pa.

Filed July 12, 1976, Ser. No. 704,454
Int. Cl.2 C07C *11/04;* **C10G** *9/32*

U.S. Cl. 208—61 **22 Claims**

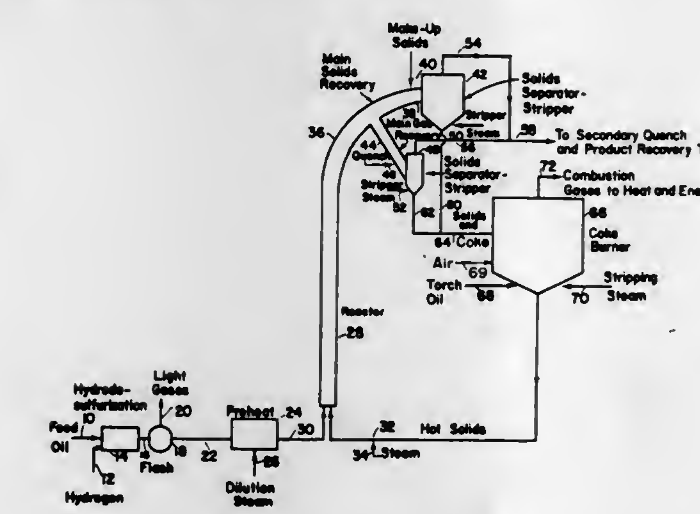

1. A process comprising passing a petroleum residual oil through a catalytic hydrodesulfurization zone in the presence of hydrogen at a temperature between 650° and 900° F. hydrogen being chemically combined with said oil during said hydrodesulfurization step, and then passing hydrodesulfurized residual oil through a thermal cracking zone together with entrained insert hot solids as the heat source and a diluent gas at a temperature between about 1,300° and 2,500° F. for a residence time between about 0.05 to 2 seconds to produce a cracked product containing ethylene and molecular hydrogen.

4,061,563
HYDROCRACKING OF HYDROCARBONS

Lee Hilfman, Mount Prospect, Ill., assignor to UOP Inc., Des Plaines, Ill.

Division of Ser. No. 599,561, July 28, 1975, Pat. No. 4,003,956, which is a continuation-in-part of Ser. No. 466,759, May 3, 1974, Pat. No. 3,931,048. This application Aug. 23, 1976, Ser. No. 716,922
Int. Cl.2 C10G *13/04;* **B01J** *29/12*

U.S. Cl. 208—111 **3 Claims**

1. A process for hydrocracking a hydrocarbonaceous charge stock into lower molecular weight hydrocarbons, which process comprises reacting said charge stock with hydrogen at hydrocracking conditions, and in contact with a catalytic composite consisting essentially of a combination of a nickel component, and a tungsten component with a silica-alumina carrier material wherein said carrier material is co-gelled silica-alumina consisting of from about 43 percent to about 57 percent by weight alumina and from about 57 to about 43 percent by weight silica and wherein said components are present in amounts sufficient to result in the composite containing on an elemental basis, about 2 to about 10 percent by weight of the nickel component and about 8 to about 20 percent by weight of the tungsten components, and separating the resulting reaction zone effluent to recover said lower molecular weight hydrocarbons.

4,061,564
TREATMENT OF SOLUTIONS CONTAINING IMPURE METALS

Achille De Schepper, Lichtaart, and Antoine Van Peteghem, Olen, both of Belgium, assignors to Metallurgie Hoboken-Overpelt, Brussels, Belgium

Filed Mar. 23, 1976, Ser. No. 669,586
Claims priority, application Luxembourg, Apr. 18, 1975, 72319
Int. Cl.2 B01D *11/04*

U.S. Cl. 210—21 **14 Claims**

1. A process for treating a solution from the bleeding of copper electrorefining or copper electrowinning, said solution being an aqueous sulfuric acid solution containing arsenic and copper, said process comprising contacting the solution with an organic phase comprising an organophosphoric compound having the general formula $(RO)_3P{=}O$ wherein R represents an unsubstituted or substituted alkyl, aryl or aralkyl group, while maintaining a temperature of between 10° and 60° and an organic phase/aqueous phase ratio of between 0.1 and 5, whereby arsenic and acid are extracted from the aqueous phase to the organic phase and copper remains in the aqueous phase, and separating the resultant pregnant organic phase from the aqueous phase.

14. A process for treating an aqueous sulfuric acid solution containing arsenic and copper, said process comprising contacting the aqueous solution with an organic phase comprising an organophosphoric compound having the general formula $(RO)_3P{=}O$ wherein R represents an unsubstituted or substituted alkyl, aryl or aralkyl group, while maintaining a temperature of between 10° and 60° C and an organic phase/aqueous phase ratio of between 0.1 and 5, whereby arsenic and acid are extracted from the aqueous phase to the organic phase and copper remains in the aqueous phase, and separating the resultant pregnant organic phase from the aqueous phase.

4,061,565
SORPTION OF WEAK ORGANIC ACIDS FROM WATER BY POLYURETHANE

Owen Victor Washburn, Fredericton; Georgeos Konstandenos Kouvarellis, and William Alexander Ferguson, both of Guelph, all of Canada, assignors to Uniroyal, Ltd., Canada

Filed Sept. 16, 1975, Ser. No. 613,846
Claims priority, application Canada, July 8, 1975, 231051
Int. Cl.2 B01D *15/06*

U.S. Cl. 210—32 **27 Claims**

1. The method of extracting a weakly acidic, monomeric organic substance from an aqueous solution thereof which comprises contacting said solution, having a pH value less than the pK_a value of said acidic substance, with granules of unblown polyurethane resin for a sufficient time to permit absorption of a substantial amount of said acidic substance from said solution by said resin granules.

4,061,566

PROCESS USING A SUPERCRITICAL FLUID FOR REGENERATING SYNTHETIC ORGANIC POLYMERIC ADSORBENTS AND WASTEWATER TREATMENT EMBODYING THE SAME

Michael Modell, Cambridge, Mass., assignor to Arthur D. Little, Inc., Cambridge, Mass.

Continuation-in-part of Ser. No. 512,124, Oct. 4, 1974. This application Apr. 15, 1976, Ser. No. 677,387
Int. Cl.^{2} B01D *15/06;* **B01J** *1/09, 31/40*
U.S. Cl. 210—32 **24 Claims**

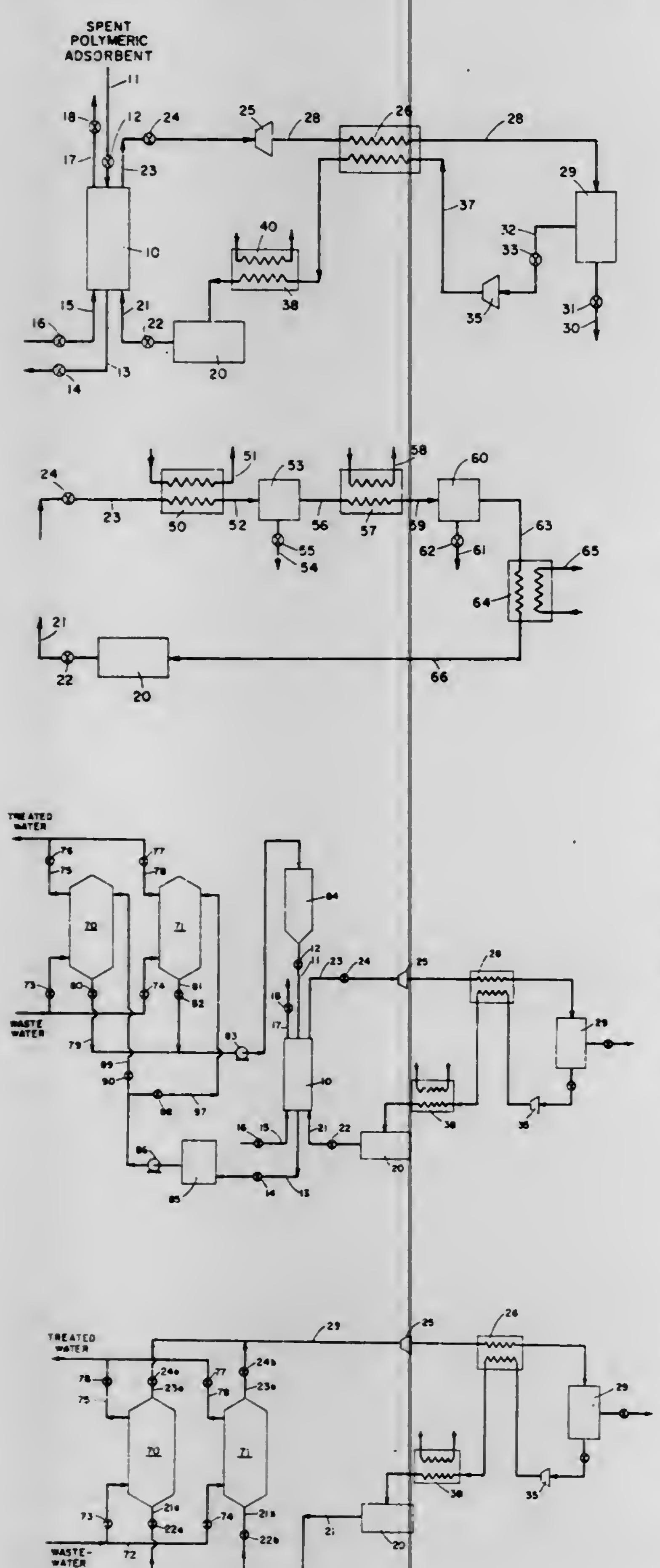

1. A process for treating water to remove at least one organic material therefrom, comprising the steps of

a. contacting a synthetic organic polymeric adsorbent with a stream of water containing said organic material under conditions such that said organic material is adsorbed as an adsorbate on said synthetic organic polymeric adsorbent;

b. then contacting said synthetic organic polymeric adsorbent with said organic material adsorbed thereon with a supercritical fluid which is a solvent for said organic material to desorb said organic material and to dissolve it in said supercritical fluid, thereby to render said adsorbent capable of adsorbing an additional quantity of said organic material, said supercritical fluid during said contacting being at a temperature between about 1.01 and about 1.3 times its critical temperature in degrees K and at a pressure above its critical pressure;

c. separating said supercritical fluid with said dissolved organic material from said adsorbent;

d. subjecting said supercritical fluid containing said organic material dissolved therein to physical treatment which renders said fluid a nonsolvent for said organic material thereby to form a two-phase system comprising said fluid in a nonsolvent state and said organic material;

e. separating the resulting two-phase system into nonsolvent state fluid and organic material; and

f. subjecting said nonsolvent state fluid subsequent to said separating step to a physical treatment which converts it to a solvent state supercritical fluid making it a solvent for said organic material.

3. A process in accordance with claim 1 wherein said supercritical fluid is carbon dioxide.

12. A process in accordance with claim 1 including the step of chemically reacting said adsorbate in said supercritical fluid with a reactant for said adsorbate introduced therein.

13. A process in accordance with claim 12 wherein said step of chemically reacting said adsorbate is carried out prior to said physical treatment of step (d).

23. In a process for treating wastewater in which at least one organic material is adsorbed on a synthetic organic polymeric adsorbent and said synthetic organic polymeric adsorbent is periodically regenerated by desorbing said organic material therefrom, the improvement comprising regenerating said synthetic organic polymeric adsorbent by contacting said adsorbent with said organic material with a supercritical fluid which is a solvent for said organic material to desorb said organic material from said adsorbent and to dissolve it in said supercritical fluid thereby to render said adsorbent capable of adsorbing an additional quantity of said organic material; the temperature of said supercritical fluid ranging between about 1.01 and 1.3 times the critical temperature in degrees K of said fluid and the pressure being above the critical pressure of said fluid.

4,061,567

METHOD FOR ADSORPTION OF OILS

Yoshinari Kobayashi, Kagawa; Ryukichi Matuo, Takamatsu, and Masashi Nishiyama, Kanonji, all of Japan, assignors to Agency of Industrial Science & Technology, Tokyo, Japan

Filed Feb. 23, 1977, Ser. No. 771,258
Claims priority, application Japan, Mar. 1, 1976, 51-22450
Int. Cl.^{2} C02B *9/02*
U.S. Cl. 210—40 **5 Claims**

1. A method for the adsorption of oils floating on or suspended in water comprising the step of bringing an oil adsorbing material consisting essentially of kapok fibers into contact with said oils.

4,061,568

METHOD FOR RECOVERING AND STABILIZING FAT AND FATTY SUBSTANCES AS WELL AS PROTEINS AND PROTEINOUS SUBSTANCES FROM PROCESS WATER

Gunnar Hall, Oslo, Norway, assignor to A/S Apothekernes Laboratorium for Specialpraeparater, Oslo, Norway

Continuation-in-part of Ser. No. 440,574, Feb. 2, 1974, abandoned. This application Dec. 16, 1975, Ser. No. 641,594
Claims priority, application Norway, Feb. 9, 1973, 73539
Int. Cl.^{2} C02B *1/20*
U.S. Cl. 210—44 **3 Claims**

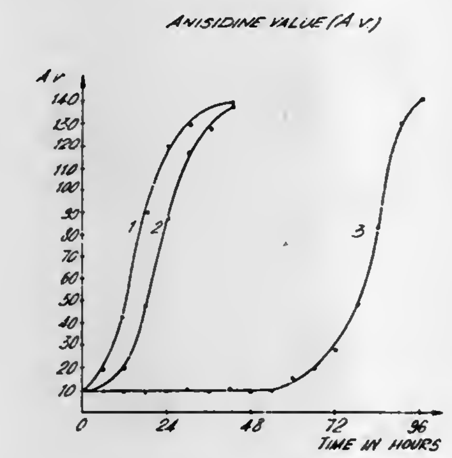

1. A method for treatment of aqueous effluents from slaughter houses or fat refining plants, said effluent containing organic materials defined as fats, fatty substances, proteins, proteinaceous substances as well as deterioration products thereof in order to recover said organic materials in the form of a stabilized sludge, consisting essentially in the following sequential steps of (a) contacting the effluents with ions selected from the group consisting of iron and aluminum in an amount sufficient to bind, by complexing the present organic material, (b) reducing the pH to below 4 by addition of a mineral acid and mixing said effluent for a time sufficient to complex said organic material, (c) adding a compound selected from the group consisting of CaO and $Ca(OH)_2$ in an amount sufficient to raise the pH to 6–9 to coprecipitate the complexed organic material, and (d) separating said complexed organic material from said effluent as a stabilized sludge by flotation.

4,061,569

OIL RECOVERY APPARATUS AND METHOD

John A. Bennett, 5660 Westhaven Road, West Vancouver, British Columbia; Ian R. McAllister, 3578 Quesnel Drive, Vancouver, British Columbia, and Howard Welsh, 1276 Premier St., North Vancouver, British Columbia, all of Canada

Continuation-in-part of Ser. No. 567,426, April 11, 1975, abandoned, which is a continuation of Ser. No. 464,540, April 26, 1974, abandoned. This application Feb. 26, 1976, Ser. No. 661,769
Int. Cl.^{2} E02B *15/04*
U.S. Cl. 210—83 **48 Claims**

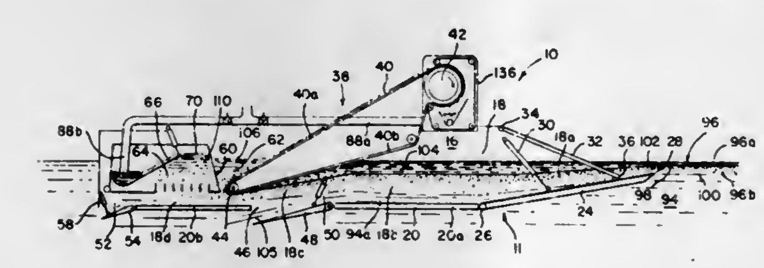

1. A method of collecting oil from a body of water on which there is an oil polluted surface layer comprising an upper surface layer portion of a relatively higher oil content and a second lower surface layer portion of an oil/water mixture of relatively less oil content, said method comprising:

a. directing said layer as a liquid flow into a hull constructed and arranged to float on the body of water, said hull having front and rear ends, and side and bottom walls defining a through oil recovery passageway, said side and bottom walls defining:

1. a first enlarged passageway section,
2. a second oil recovery passageway section at a first stage oil recovery area, and
3. a third oil recovery passageway section at a second stage oil recovery area,

b. initially passing said layer at a first velocity over a front inlet member mounted to the front end of said hull for vertical adjustment, said inlet member having a front lower edge portion defining a front passageway inlet constructed and arranged to receive a flow of said polluted surface layer over said lower edge portion,

c. positioning the front inlet member by actuating means vertically to an operational position where the lower edge portion of the front inlet member receives the flow of the polluted surface layer thereover,

d. then passing said surface layer as a liquid flow rearwardly through said first enlarged passageway section which is substantially unobstructed and has a cross sectional flow area and depth substantially greater than that of said inlet to effect a substantial reduction in flow velocity and a substantial increase in depth of at least said upper layer portion, and also to effect a third lowermost layer portion of relatively oil free water by upward flotation of oil in said second layer portion to said upper layer portion, said enlarged passageway section being defined by first bottom and side wall portions, said first bottom wall portion being positioned at a level below that of said front lower edge portion of the front inlet member,

e. passing said first and second layers from said enlarged passageway section through said second oil recovery passageway section at said first stage oil removal area and collecting at least a substantial portion of said upper layer portion by engaging said upper layer portion with a downwardly and rearwardly traveling oil absorptive belt that travels continuously from an upward forward location at a downward slant to a rearward location below the surface level of said first layer, whereby oil from the upper layer portion is absorbed into said belt, said second passageway section being defined by second bottom and side wall portions positioned rearwardly of the first bottom and side wall portions, with the second bottom wall portion being positioned at a level below that of the lower rear end of the oil recovery belt,

f. carrying the absorbed oil upwardly by said belt and then removing collected oil from said belt at said upper location,

g. directing at least a substantial portion of the remaining liquid flow through said third oil recovery passageway section at said second oil recovery area to cause oil to separate by flotation from the remaining liquid flow and confining the oil so collected in the second oil recovery area, said second oil recovery area having second oil recovery means located rearwardly of said oil recovery belt, said second oil recovery means comprising rear and side enclosure walls extending upwardly above the level of the lower rear end of the belt and defining an oil collecting enclosure positioned rearwardly of the lower rear end of the belt, said third passageway section being defined by third bottom and side wall portions positioned rearwardly of said second bottom and side wall portions, with the third bottom and side wall portions being positioned at a level below the rear and side enclosure walls to define said third passageway section passing beneath the oil collecting enclosure defined by the rear and side enclosure walls, and

h. discharging liquid flow remaining from the second oil recovery area back to the body of water through means defining a rear opening leading from said third passageway section.

4,061,570
IODINE GENERATOR FOR RECLAIMED WATER PURIFICATION
James C. Fletcher, Administrator of the National Aeronautics and Space Administration, with respect to an invention of Richard A. Wynveen, Pepper Pike; James D. Powell, Euclid, and Franz H. Schubert, Mentor, all of Ohio
Filed Apr. 25, 1975, Ser. No. 571,459
Int. Cl.^{2} B01J *1/06, 4/02;* **G01N** *21/02, 33/18*
U.S. Cl. 210—96 M **7 Claims**

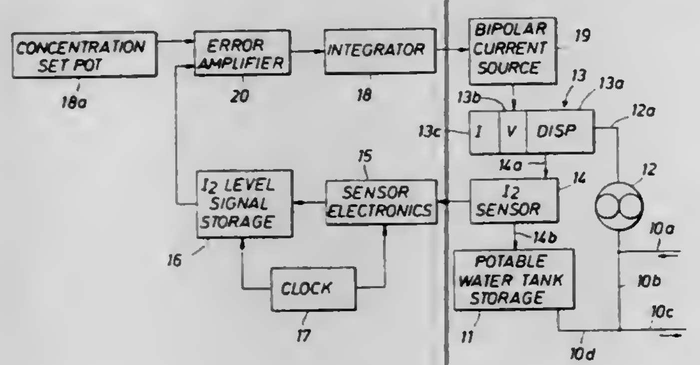

1. A system for iodinating water comprising
a. an iodine dispensing means having a first and a second chamber separated by an electro-chemical valve means, said first chamber being adapted to receive a slurry of iodine crystals, said second chamber having an inlet and an outlet for the flow of water to be iodinated, said electro—chemical valve means having an anion exchange membrane sandwiched between two metal screens which form electrodes, each of said metal screen electrodes being electrically coupled to an outlet terminal, said electro-chemical valve means being responsive to an electrical current for passing iodine across said anion exchange membrane,
b. an iodine sensor means for detecting the concentration of iodine in the iodinated water, said iodine sensor means having an inlet and an outlet for the flow of iodinated water, said inlet for the iodine sensor means being fluidly coupled to said outlet of the second chamber of the iodine dispensing means, said iodine sensor means further having means for producing an electrical signal representative of the iodine concentration in the iodinated water flowing through the iodine sensor means,
c. reference means for providing a present electrical signal representative of a desired iodine concentration,
d. comparator means electrically coupled to said iodine sensor means and said reference means for comparing the electrical signal from said iodine sensor means with the electrical signal from said reference means and for producing an error signal in the event of a difference in signal values, and
e. means for supplying said error signal to said outlet terminals of said electrodes.

4,061,571
MARINE WATER INLET DEVICE
Philip M. Banner, P.O. Box 307, Massapequa, N.Y. 11758
Continuation-in-part of Ser. No. 343,121, March 20, 1973, Pat. No. 3,864,260. This application Nov. 19, 1974, Ser. No. 525,100
Int. Cl.^{2} B01D *35/16*
U.S. Cl. 210—130 **4 Claims**

1. A marine water inlet device in combination with a marine vessel and providing the function of cleaning the water inlet of an engine having water flowing therethrough comprising, in combination, a marine vessel with a strainer located on an exterior surface of the hull of said marine vessel, said strainer including a chamber defined by an upper surface, depending sidewalls, and a lower surface, said upper surface being located adjacent the exterior surface of the hull of said marine vessel, inlet means for introducing water in said strainer chamber including perforate openings located in said chamber lower surface, outlet means located on said upper surface of said chamber including an enclosure adapter for passing said water from said chamber through said hull of said marine vessel and in fluid communication with said engine, said adapter enclosure having a housing with sidewalls and an open top and an open bottom, said open bottom being sealingly connected to an inlet end of a conduit with the opposite end of said conduit

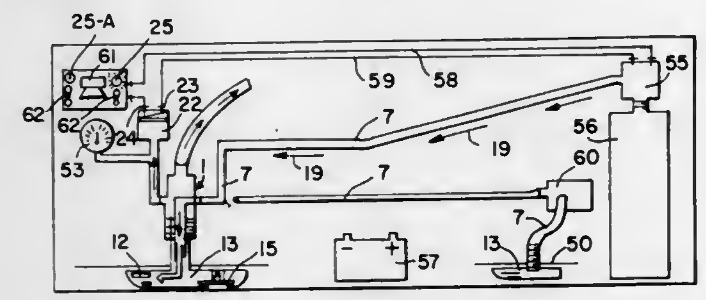

being connected to the liquid cooling system of said engine, a fluid conduit with an end connected to a source of liquid under pressure separate from the engine cooling system pressure means to maintain said liquid under pressure, said fluid conduit passing through the sidewall of said housing of said enclosure adapter and extending downwardly within said adapter enclosure into said strainer chamber for backwash of said perforate openings in said chamber.

4,061,572
OIL FILTER
Lester Samuel Cohen, Broomall, Pa., and William Dein Lewis, Wilmington, Del., assignors to E. I. Du Pont de Nemours and Company, Wilmington, Del.
Filed Mar. 11, 1974, Ser. No. 449,989
Disclosure was also published under second Trial Voluntary protest program on Mar. 30, 1976
Int. Cl.^{2} B01D *11/00*
U.S. Cl. 210—168 **1 Claim**

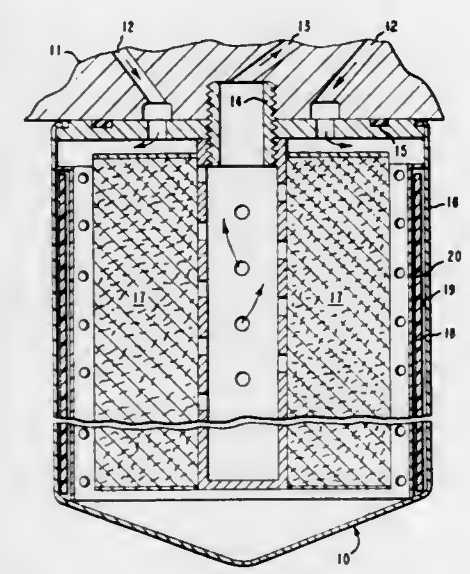

1. In an oil filter, for use with an internal combustion engine using circulating lubricating oil, having an outer casing and a filter element disposed in said casing to provide an annular passage around said element the improvement comprising:
1. a sheet of an oil-soluble, solid ethylene copolymer comprising about 25 to 55% by weight ethylene, 35 to 75% by weight propylene and up to 10% by weight of 1,4-hexadiene lining the inner side walls of said casing and
2. a perforated metal sheet overlaying the copolymer sheet, said perforations of a size to limit contact of the copolymer sheet with the circulating oil over its normal life.

4,061,573
PORTABLE OIL-WATER SEPARATION APPARATUS
Richard D. Biron, Acton, Mass., assignor to Seagull Industries, Inc., Acton, Mass.
Filed Sept. 18, 1975, Ser. No. 614,818
Int. Cl.^{2} B01D *27/02*
U.S. Cl. 210—282 **5 Claims**

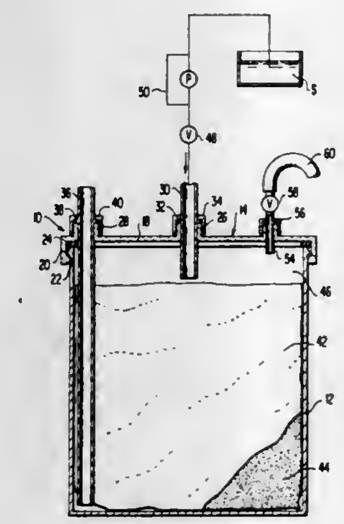

1. A portable, rechargeable oil-water separation apparatus comprising a separation chamber defined by a generally cylindrical container having a closed bottom end and an open top end, a removable closure member adapted to fit on and sealingly close said open end, an inlet and an outlet formed in said removable closure and communicating with said chamber, said inlet including conduit having an open end positioned in the top portion of said chamber and spaced below said closure, said outlet including a discharge conduit having its open end positioned within said chamber adjacent said closed bottom end, means supplying an oil-water mixture under pressure to said chamber through said inlet conduit, flow restricting means in said inlet conduit for restricting the rate of flow of said oil-water mixture into said chamber, a supply of oleophilic, hydrophobic ground foamed polymeric material in said chamber between said open ends of said inlet and said discharge conduits, said foamed polymeric material being a closed cell urethane foam having a density within the range of 1.7 to 2.3 pounds per cubic foot and being ground so that at least a major portion of the ground particles are of a size within the range of one-fourth to one-half inch, said foamed material being contained within at least one closed bag formed from a porous hydrophilic material with said bag and said foamed material contained therein being packed into and substantially filling said chamber between said open ends of said inlet and discharge conduits with a portion of said chamber between said closure and said open end of said inlet conduit being substantially free of said foam material whereby, when said chamber is filled with water and an oil-water mixture is circulated therethrough from said inlet to said outlet conduits, the oil-water mixture is discharged into said chamber below the surface of the liquid therein and must flow downwardly through said bag of ground foamed plastic material and oil attracted by said foam material is permitted to float to said portion of said container which is substantially free of said foam material.

4,061,574
ASSEMBLY OF PERMEABLE HOLLOW FIBERS AND A TUBESHEET SUPPORTABLE AT ITS FACE AND OPENED BY BORES PARALLEL THERETO
George B. Clark, Clayton, Calif., assignor to The Dow Chemical Company, Midland, Mich.
Filed Feb. 14, 1977, Ser. No. 768,524
Int. Cl.^{2} B01D *13/00, 31/00*
U.S. Cl. 210—321 R **10 Claims**

1. A hollow fiber and tubesheet assembly having utility as a component of a permeability separation apparatus and comprising a non-random fiber bundle having two ends, one of which is potted in a shaped, solid resin body which constitutes said tubesheet and is the only end of said bundle potted therein, said bundle consisting of permeable, hollow fiber lengths,
said tubesheet having a first face, from which the unpotted portions of said fiber lengths depend, and a second, opposed face, the portions of the fiber lengths potted in said tubesheet extending therethrough from said first face and terminating at or adjacent to said second face,
at least half of said potted fiber portions being interrupted by and opening into bores in the tubesheet, each of which extends to and opens upon a surface of said tubesheet other than said first and second faces,
said assembly being adapted to be disposed, together with cooperating sealing and permeate collecting means, in a

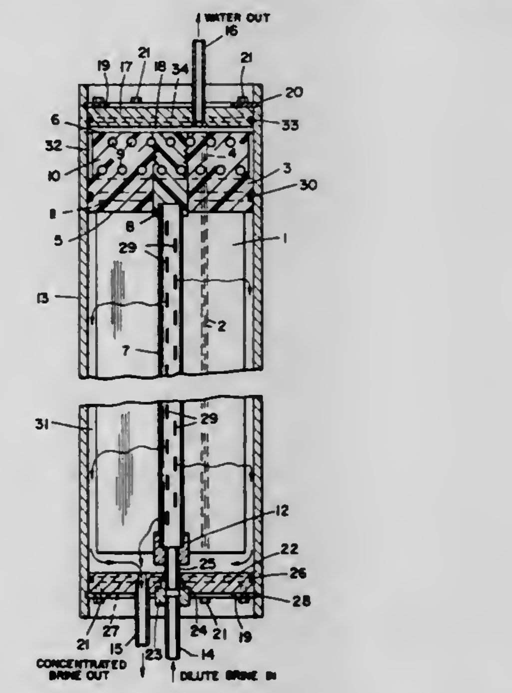

pressurizeable casing fitted with appropriately located feed fluid ingress and egress means and with permeate egress means, in such manner that:
a. when fluid is supplied under pressure to the exterior surfaces of the unpotted fiber portions, it will permeate through the fiber walls, pass through the fiber lumen and said bores to said permeate collecting means and out through said permeate egress means;
b. said assembly is positioned in said casing with said second face in contact with at least a major portion of an end member thereof so that the tubesheet is supported against the pressure exerted by said fluid on said first face, and
c. egress of permeate from the fiber lumens is not interfered with by said contact.

4,061,575
FILTRATION APPARATUS
Raymond Thomas Randle, Hartlepool, England, assignor to Steetley (Mfg.) Limited, England
Filed Aug. 1, 1975, Ser. No. 601,055
Claims priority, application United Kingdom, Aug. 7, 1974, 34851/74
Int. Cl.^{2} B01D *29/04*
U.S. Cl. 210—350 **2 Claims**

1. In a candle displacement filtration apparatus of the kind which comprises a cylindrical housing accommodating a hollow perforated cylindrical body or candle, and impermeable elastic sleeve disposed within the annular space defined by the inside of the housing and the outside of the cylindrical body and circumferentially attached at its ends to the housing of the cylindrical body, thereby dividing the annular space into an inner filtration compartment and an outer pressure applying compartment, a filter element disposed around and supported by the cylindrical body, outlet means for the discharge of filtrate which has passed through the filter element into the cylindrical body, an inlet into the inner compartment for li-

quid/solid mixtures, an inlet into the outer compartment for a hydraulic fluid under pressure, means for displacing the hollow perforated cylindrical body, or candle, axially relative to the cylindrical housing so that the cake adhering to the candle is exposed and can be discharged, and an inlet into the interior of the cylindrical body for compressed air, the improvement wherein the inlet to the inner compartment for liquid/solid mixtures comprises a substantially cylindrical chamber provided with circumferentially spaced apertures adapted to connect with the inner compartment, said chamber being located

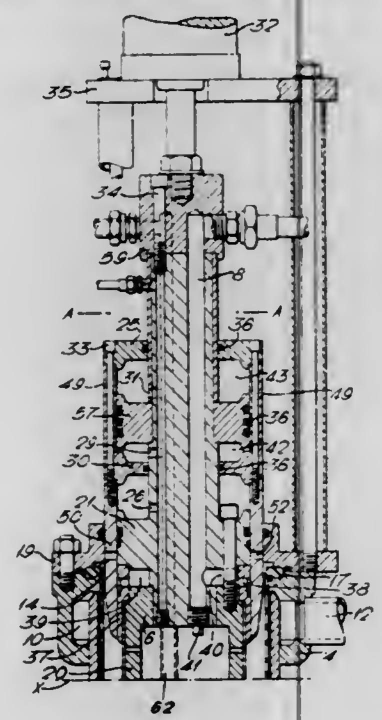

at one end of the cylindrical body in an extension thereof, an inlet line or lines into said chamber and a hollow cylindrical member coaxial with said extension and movably constructed and arranged to cover or expose said apertures and to form with said extension a cell the ends of which are defined by flanges extending from said hollow cylindrical member and slidably engaging with the walls of said extension, said cell being divided by a piston integral with said extension, means being provided on either side of said piston for supplying or venting air to or from either side of the cell.

4,061,576

INLINE OIL FILTER ASSEMBLY

Charles William Hilgert, and Raymond Joseph Lobmeyer, both of Dubuque, Iowa, assignors to Deere & Company, Moline, Ill.

Continuation of Ser. No. 595,274, July 14, 1975, abandoned. This application Feb. 16, 1977, Ser. No. 768,996

Int. Cl.² C02C *1/14*

U.S. Cl. 210—437 **3 Claims**

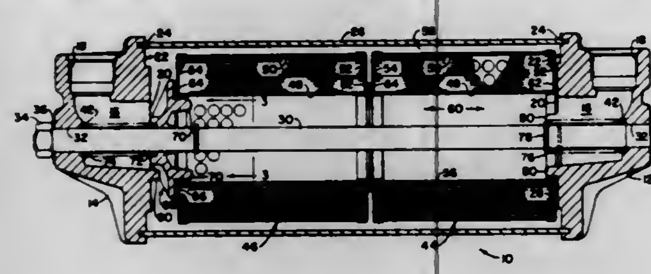

1. An oil filter assembly, comprising: a hollow housing having a cylindrical wall; an annular filter element including inner and outer cylindrical perforated shells disposed concentrically in the housing and having opposite ends connected by first and second annular end plates; first and second end members respectively sealingly engaged with the opposite ends of the housing; a center bolt passing through the end members; fastening means received on the bolt for holding the end members in place; said first and second end members respectively having inlet and outlet passages extending therethrough; said element being disposed with its first end plate spaced from the first end member; member means preventing fluid from flowing centrally through the first annular end plate of the element; first and second annular seals received on the center bolt and seated against the first end member and the member means; and biasing means acting between the first and second annular seals for retaining the latter in place to prevent leakage along the center bolt and through the first end member and the member means.

4,061,577

FIBER OPTIC MULTIPLEX OPTICAL TRANSMISSION SYSTEM

Charles H. Bell, Merritt Island, Fla., assignor to The United States of America as represented by the Administrator of the National Aeronautics and Space Administration, Washington, D.C.

Filed Aug. 18, 1976, Ser. No. 715,485

Int. Cl.² H04B *9/00*

U.S. Cl. 250—199 **6 Claims**

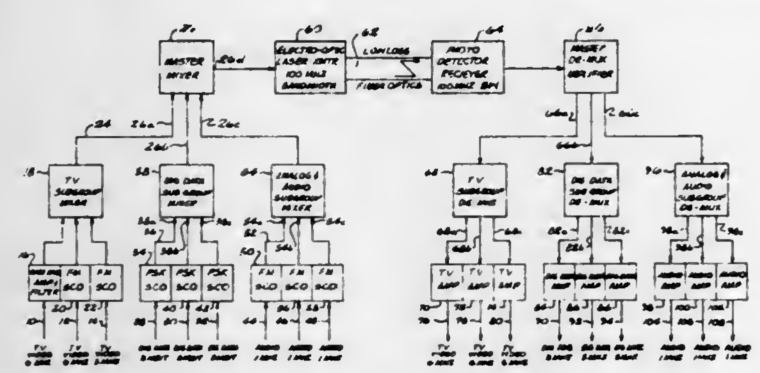

1. A multiplex optical transmission system for simultaneously transmitting and receiving a plurality of signals while minimizing external interference, said system comprising:

a. a plurality of video signals,

b. means for blocking said video signals into respective frequency ranges,

c. a video subgroup mixer means for mixing said video signals of said frequency ranges and generating a single composite video signal,

d. a plurality of data signals,

e. means for blocking said data signals into respective data frequency ranges,

f. a data subgroup mixer means for mixing said data signals of said frequency ranges and generating a composite data signal,

g. a master mixer connected to the output of said video subgroup mixer and said data subgroup mixer producing a composite electrical signal,

h. an optical transmitter connected to said master mixer converting said composite electrical signal into an optical signal,

i. a fiber optic cable having one end connected to said optic transmitter,

j. an optical receiver connected to the other end of said fiber optic cable receiving said optical signal being transmitted over said fiber optic cable and converting said optical signal back to a composite electrical signal,

k. a de-multiplexer connected to the output of said optic receiver separating said composite siganl into a composite video signal and a composite data signal,

l. means connected to said de-multiplexer for separating said composite video signal and said composite data signals into individual video signals of respective frequencies and into individual data signals of respective frequencies.

4,061,578

INFRARED DETECTION AND IMAGING, METHOD AND APPARATUS

Marcos Kleinerman, South Point Road, Webster, Mass. 01570

Filed Apr. 5, 1976, Ser. No. 673,639

Int. Cl.² H01J *31/50;* **G01N** *21/38*

U.S. Cl. 250—330 **15 Claims**

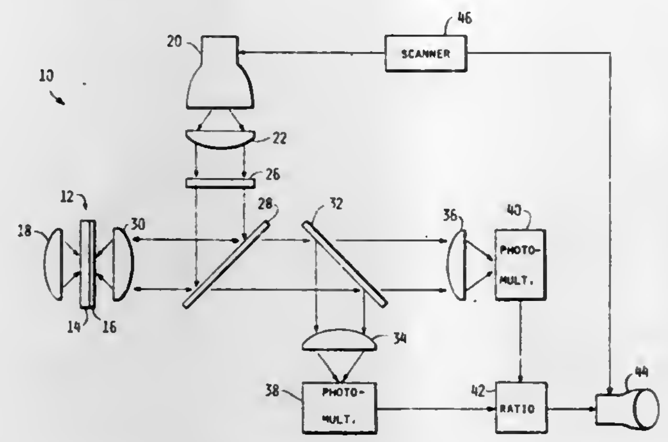

1. A method for converting an infrared image comprising the steps of focusing an infrared image on an infrared absorbing film having applied thereon a thin layer of a luminescent material, the luminescence of said material being produced upon irradiation with ultraviolet or visible radiation, said luminescence having two distinct visible or short wavelength IR spectral components identified as A and B, the ratio of the intensities being determined by the temperature of the luminescent material, the intensity of said component A decreasing with an increase in temperature and the intensity of said component B increasing with an increase in temperature; measuring the ratio of the intensities of said A and B components for each resolvable element of the infrared image focused on said film; and processing and displaying an image corresponding to the ratio distribution of the luminescent intensities.

4,061,579

INTUMESCENT COATINGS CONTAINING 4,4′-DINITROSULFANILIDE

Paul M. Sawko, and Salvatore R. Riccitiello, both of San Jose, Calif., assignors to The United States of America as represented by the Administrator of the National Aeronautics and Space Administration, Washington, D.C.

Filed Oct. 22, 1976, Ser. No. 734,902

Int. Cl.² C09D *5/18;* **C09K** *3/28*

U.S. Cl. 252—8.1 **10 Claims**

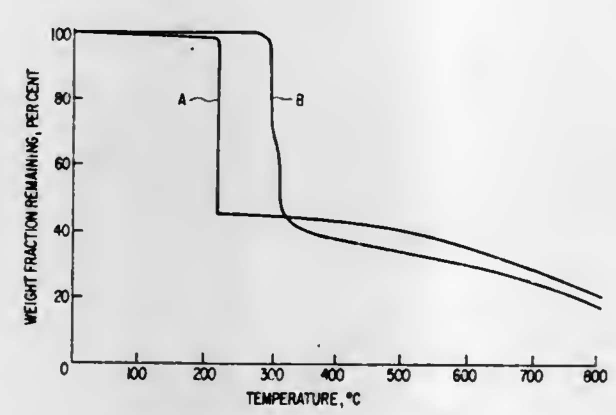

1. An intumescent composition, which comprises:

a mixture of 4,4′-dinitrosulfanilide as the intumescent agent in a polymeric binder mixture of a chlorinated polyolefin, a bisphenol A epoxy resin and a rubber-like amine hardener.

4,061,580

THICKENED AQUEOUS COMPOSITIONS FOR WELL TREATMENT

Richard William Jahnke, Mentor-on-the-Lake, Ohio, assignor to The Lubrizol Corporation, Cleveland, Ohio

Filed Sept. 8, 1976, Ser. No. 721,638

Int. Cl.² E21B *43/27, 43/26*

U.S. Cl. 252—8.55 R **10 Claims**

1. A thickened composition comprising a major amount of hydrochloric aqueous solution of an acid or a salt useful in well treatment and a minor thickening amount of a phosphate salt of at least one alkoxylated amine of the formula

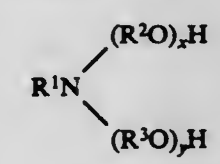

wherein R^1 is an alkyl or alkenyl radical having about 14–30 carbon atoms, each of R^2 and R^3 is an ethylene radical, and each of x and y is an integer of at least 1, the total of x and y being 6 or less.

4,061,581

TRIMETHYLOLPROPANE ESTERS USEFUL AS BASE LUBRICANTS FOR MOTOR OILS

Gérard Leleu, Grenoble; Pierre Bédague, Biviers, and Bernard Sillion, Grenoble, all of France, assignors to Institut Francais du Petrole and Rhone Progil, both of Rueil Malmaison, France

Filed Dec. 12, 1974, Ser. No. 532,237

Claims priority, application France, Dec. 12, 1973, 73.44459

Int. Cl.² C10M *1/48*

U.S. Cl. 252—32.7 E **25 Claims**

1. A trimethylol-propane ester composition useful as lubricant base for motor-car engines, consisting essentially of the product obtained by total esterification of trimethylolpropane by means of a diversity of saturated aliphatic-hydrocarbyl carboxylic acids, said diversity having in a proportion of 6 to 33% of the carboxy equivalents, at least one straight or branched-chain dicarboxylic acid having from 4 to 19 carbon atoms, and in a proportion of 94 to 67% of the carboxy equivalents, a mixture of monocarboxylic acids, wherein said mixture of monocarboxylic acids comprises:

a. from 10 to 70% by mole of at least one branched chain acid having from 15 to 22 carbon atoms and selected from the group consisting of those having one methyl side chain, those having two methyl side chains, those having one ethyl side chain, those having one methyl and one ethyl side chains, and those having two ethyl side chains, and

b. from 90 to 30% by mole of at least one straight chain acid having from 7 to 22 carbon atoms.

12. A trimethylol-propane ester composition useful as lubricant base for motor-car engines, consisting essentially of the product obtained by total esterification of trimethylolpropane by means of a diversity of saturated aliphatic-hydrocarbyl carboxylic acids, said diversity having in a proportion of 6 to 33% of the carboxy equivalents, at least one straight or branched-chain dicarboxylic acid having from 4 to 19 carbon atoms, and in a proportion of 94 to 67% of the carboxy equivalents, a mixture of monocarboxylic acids, said mixture comprising:

a. from 10 to 30% by mole of a branched chain acid containing 15-22 carbon atoms and selected from the group consisting of those having one methyl side chain, those having two methyl side chains, those having one ethyl side chain, those having one methyl and one ethyl side chains, and those having two ethyl side chains, and

b. from 40 to 60% by mole of straight-chain acid containing 7 to 9 carbon atoms and from 20 to 40% by mole of straight chain acid containing 10 to 16 carbon atoms.

4,061,582
RESINOUS PIGMENT TONER AND LIQUID DEVELOPER CONTAINING POLYVINYL ACETATE COATED ON THE PIGMENT

Elias P. Moschovis, and John L. Gilson, both of Morton Grove, Ill., assignors to A. B. Dick Company, Niles, Ill.
Filed Oct. 24, 1975, Ser. No. 625,754
Int. Cl.² G03G *9/08, 9/12;* **C08J** *3/20*
U.S. Cl. 252—62.1 L **9 Claims**

1. A liquid developer for use in providing an ink receptive, water repellent, oleophilic lithographic image suitable for use in the production of multiple copies by lithographic (offset) technique, wherein the developer is formulated of a liquid organic solvent having a resistivity greater than 10^{10} ohm-cm, a toner formed of oleophilic pigment particles, and a polyvinyl acetate resinous binder, the improvement wherein the polyvinyl acetate resinous binder is present as a coating precipitated onto the surfaces of the pigment particles prior to incorporation in the liquid developer as a toner and which includes in addition a hydrophobic colloidal silica present in the ratio of 1 part by weight of the hydrophobic colloidal silica to 1.5 to 4 parts by weight of the toner formed of the polyvinyl acetate resin precipitated on the pigment particles.

4,061,583
PREPARATION OF TITANATES

Michihiro Murata, and Akihiro Kitao, both of Nagaokakyo, Japan, assignors to Murata Manufacturing Co., Ltd., Japan
Continuation-in-part of Ser. No. 490,264, July 29, 1974, abandoned. This application Apr. 26, 1976, Ser. No. 680,538
Claims priority, application Japan, Mar. 13, 1974, 49-29321; May 24, 1974, 49-59198
Int. Cl.² C01G *23/00;* **C01F** *11/00*
U.S. Cl. 252—62.3 BT **10 Claims**

1. A process for the preparation of a titanate which comprises the steps of
   a. dissolving a titanium salt and at least one metal salt selected from the group consisting of salts of Ba, Ca, Sr, Zn, Cd and Pb in water to form an aqueous solution containing titanium and metal ions;
   b. adding the solution containing titanium and metal ions to an aqueous alkaline solution containing hydrogen peroxide to form a precipitate while maintaining a constant pH therein;
   c. recovering the precipitate from the resulting mixture; and
   d. heating the precipitate at a temperature not lower than 100° C.

4,061,584
HIGH DIELECTRIC CONSTANT INK FOR THICK FILM CAPACITORS

Roland T. Girard, Scotia, and George A. Rice, Schenectady, both of N.Y., assignors to General Electric Company, Schenectady, N.Y.
Division of Ser. No. 532,454, Dec. 13, 1974, Pat. No. 3,968,412, which is a continuation-in-part of Ser. No. 383,280, July 27, 1973, Pat. No. 3,878,443. This application Jan. 22, 1976, Ser. No. 651,407
The portion of the term of this patent subsequent to Apr. 15, 1992, has been disclaimed.
Int. Cl.² H01G *4/12*
U.S. Cl. 252—63 **11 Claims**

1. An improved dielectric ink for thick film printing consisting of:
   a powdered, high dielectric constant material which includes a barium titanate material which is one selected from the group consisting of chemically pure barium titanate and chemically pure barium titanate modified with from about 0.125% to about 5.0% by weight of a metal oxide additive;
   an alkali-free glass binder comprising from 3 percent to 7 percent by total weight of the dielectric and binder materials, the binder having at least the electropositive element barium present therein, the alkali-free glass has the following formulation:

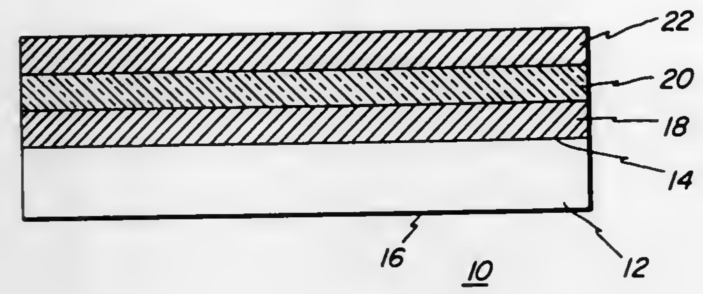

Ingredient	% by weight
BaO	38 to 46
ZnO	7 to 11
SiO_2	35 to 45
B_2O_3	6 to 8
Al_2O_3	2 to 5

and
   a liquid vehicle for said dielectric and binder materials.

4,061,585
METHOD OF USING HETEROPOLYSACCHARIDES PRODUCED BY THE FERMENTATION OF METHANOL

Robert K. Finn; Alex L. Tannahill, both of Ithaca, N.Y., and Joseph E. Laptewicz, Jr., Groton, Conn., assignors to Cornell Research Foundation, Inc., Ithaca, N.Y.
Division of Ser. No. 592,603, July 2, 1975, Pat. No. 4,016,865, which is a division of Ser. No. 523,559, Nov. 14, 1974, Pat. No. 3,932,218, which is a division of Ser. No. 364,559, May 29, 1973, Pat. No. 3,923,782. This application Dec. 1, 1976, Ser. No. 746,595
Int. Cl.² C11D *3/22;* **H01M** *4/20;* **B01J** *13/00*
U.S. Cl. 252—89 R **5 Claims**

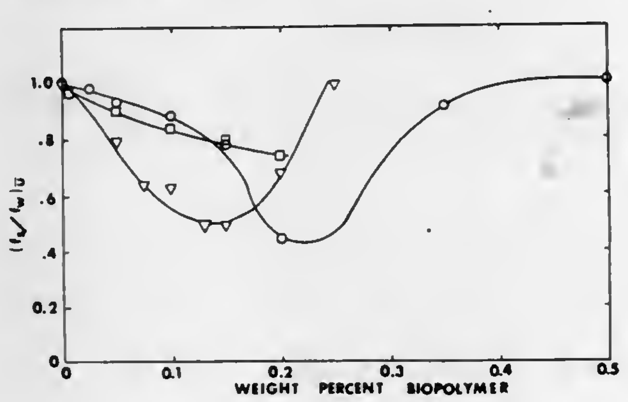

5. A method of preventing soil redeposition in detergent formulations, comprising adding to said formulations from about .01 to 0.1 percent by weight of an heteropolysaccharide of bacterial origin having an intrinsic viscosity in the range of about 10 to 20 deciliters per gram and comprising the following constituents on a weight percent basis:
1. Organic matter of 60% to 90% comprising
   a. 10% to 30% glucose;
   b. 3% to 15% mannose;
   c. 3% to 15% galactose; and
   d. 5% to 35% pyruvic acid;
2. Inorganic matter of 10% to 40% comprising
   a. 5% to 25% phosphates; and
   b. 5% to 25% cations.

4,061,586
OLEFIN SULFONATE DETERGENT COMPOSITIONS

Stephen Cajetan Klisch, Somerset, and Charles Andrew Martin, Morris Plains, both of N.J., assignors to Colgate-Palmolive Company, New York, N.Y.
Continuation of Ser. No. 349,111, April 9, 1973, abandoned. This application July 23, 1975, Ser. No. 598,378
The portion of the term of this patent subsequent to Sept. 7, 1993, has been disclaimed.
Int. Cl.² C11D *1/14, 1/83, 3/34, 17/08*
U.S. Cl. 252—153 **6 Claims**

1. A light duty, liquid detergent consisting essentially of 10 to 35% by weight of at least one water-soluble salt of a sulfonate alpha olefin containing about 12 to 18 carbon atoms, about 7.5 to about 10% by weight of an alkanoic acid diethanolamide having 12 to 14 carbon atoms in its alkanoyl radical, the weight ratio of olefin sulfonate to said diethanolamide being from about 3:1 to about 1:1, and an aqueous medium selected from the group consisting of water and a mixture of water with a solubilizer selected from the group consisting of 1 to 10% by weight of a C_2–C_3 monohydric alcohol, 0.5 to 10% by weight of a sodium potassium, ammonium and mono-, di- or triethanolammonium salt of C_1–C_3 alkylbenzene sulfonate or C_5–C_6 alkyl sulfate, and mixtures thereof, about 1 to about 8% by weight of a water-soluble salt of allyl sulfonic acid as an anti-gelling agent, said composition containing less than 5% of the total detergent weight of additional compatible noncationic detergents.

4,061,587
LIQUID CRYSTALLINE CINNAMIC ACID ESTERS

Hanspeter Scherrer, Therwil, and Arthur Boller, Binningen, both of Switzerland, assignors to Hoffmann-La Roche Inc., Nutley, N.J.
Continuation of Ser. No. 604,573, Aug. 14, 1975, abandoned, which is a division of Ser. No. 529,436, Dec. 4, 1974, Pat. No. 3,927,066. This application July 8, 1976, Ser. No. 703,489
Claims priority, application Switzerland, Dec. 17, 1973, 17626/73
Int. Cl.² C09K *3/34;* **G02F** *1/13*
U.S. Cl. 252—299 **21 Claims**

2. A nematic composition for electro-optical purposes, which comprises a compound of the formula

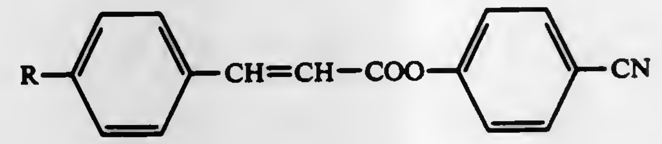

wherein R is straight-chain alkyl of 1 to 8 carbon atoms, or mixtures thereof, and one or more other positive anisotropic nematic compounds.

4,061,588
CATALYST COMPOSITION AND METHOD OF PREPARATION

Michael Gulla, Sherborn, Mass., assignor to Shipley Company Inc., Newton, Mass.
Filed Sept. 30, 1975, Ser. No. 618,034
The portion of the term of this patent subsequent to Apr. 26, 1994, has been disclaimed.
Int. Cl.² B01J *31/30*
U.S. Cl. 252—429 R **59 Claims**

1. An essentially dry composition which, upon admixture with an aqueous acid solution having a pH of less than the precipitation point of the catalyst, forms a stable catalyst composition for catalyzing a substrate prior to the deposition of an electroless metal, said solution containing sufficient halide ions to render the same stable and catalytic, said halide ions being derived from said aqueous acid with which said dry composition is mixed, said dry composition or the combination resulting from mixing said aqueous acid with said dry composition, said essentially dry compositions comprising a catalytic metal in combination with tin compounds where at least a portion of said tin compounds is in stannous form in an amount whereby the molar ratio of stannous tin to catalytic metal is at least 2:1, and a member selected from the group of urea in an amount of at least one mole per ten moles of acid with which said dry composition is mixed, an extraneous halide salt in an amount of at least 0.2 moles in excess of that provided by all catalyst components including the acid with which the dry composition is mixed and mixtures thereof.

4,061,589
CORROSION INHIBITOR FOR COOLING WATER SYSTEMS

Jose T. Jacob, Waukegan, Ill., assignor to Chemed Corporation, Cincinnati, Ohio
Filed Jan. 17, 1977, Ser. No. 759,361
Int. Cl.² C09K *3/00*
U.S. Cl. 252—389 A **13 Claims**

1. The method of inhibiting metal corrosion in aqueous systems that comprises adding to the aqueous liquid an effective amount, 1 –10,000 ppm. of a member selected from the group consisting of 1,3,5-triazine-4,6-diketo-2-dithio ammonium phosphamate and 1,3,5- triazine-4-6-dithio-2-dithio ammonium phosphamate.

4,061,590
CATALYST COMPOSITION OF AN AZO NITRILE MIXTURE IN AN ORGANIC SOLVENT

Earl P. Moore, Jr., Hockessin, Del., assignor to E. I. Du Pont de Nemours and Company, Wilmington, Del.
Division of Ser. No. 484,309, June 28, 1974, Pat. No. 3,987,025. This application May 17, 1976, Ser. No. 687,178
Int. Cl.² B01J *27/24, 31/02;* **C07C** *107/02*
U.S. Cl. 252—426 **8 Claims**

1. A catalyst composition with a concentration of from 10 to 85% by weight of an azonitrile mixture having a freezing point of a maximum of 25° C selected from the group consisting of:
A. 2,2'-azobis(2methylbutyronitrile), 2,2'-azobis(2-methylhexanenitrile) and 2-[(1-cyano-1-methylpropyl)azo]-2-methylhexanenitrile;
B. 2,2-azobis(2-methylbutyronitrile), 2,2'-azobis(2-methylheptanenitrile) and 2-[(1-cyano-1-methylpropyl)azo]-2-methylheptanenitrile;
C. 2,2'-azobis(2-methylbutyronitrile), 2,2'-azobis(2-ethylhexanenitrile) and 2-[(1-cyano-1-methylpropyl)azo]-2-ethylhexanenitrile;
D. 2,2'-azobis(2-methylbutyronitrile), 2,2'-azobis(2-ethylheptanenitrile) and 2-[(1-cyano-1-methylpropyl)azo]-2-ethylheptanenitrile;
E. 2,2'-azobis(2-methylbutyronitrile), 2,2'-azobis(2-methyloctanenitrile) and 2-[(1-cyano-1-methylpropyl)azo]-2-methyloctanenitrile;
F. 2,2'-azobis(2-methylpentanenitrile, 2,2'-azobis(2-ethylhexanenitrile) and 2-[(1-cyano-1-methylbutyl)azo]-2-ethylhexanenitrile;
G. 2,2'-azobis(2-methylhexanenitrile), 2,2'-azobis(2-methyloctanenitrile) and 2-[(1-cyano-1-methylpentyl)azo]-2-methyloctanenitrile;
H. 2,2'-azobis(2-methylpentanenitrile), 2,2'-azobis(2-ethylheptanenitrile) and 2-[(1-cyano-1-methylbutyl)azo]-2-ethylheptanenitrile;
I. 2,2'-azobis(2-methylhexanenitrile), 2,2'-azobis(2-methylheptanenitrile) and 2-[(1-cyano-1-methylpentyl)azo]-2-methylheptanenitrile;
J. 2,2'-azobis(2-methylpentanenitrile), 2,2'-azobis(2-methyloctanenitrile) and 2-[(1-cyano-1-methylbutyl)-azo]-2-methyloctanenitrile;
K. 2,2'-azobis(2-methylpentanenitrile), 2,2'-azobis(2-methylhexanenitrile) and 2-[(1-cyano-1-methylbutyl)azo]-2-methylhexanenitrile;
L. 2,2'-azobis(2-methylpentanenitrile), 2,2'-azobis(2-methyl-

heptanenitrile) and 2-[(1-cyano-1-methylbutyl)azo]-2-methylheptanenitrile; and

M. 2,2'-azobis(2-methylhexanenitrile), 2,2'-azobis(2-ethylheptanenitrile) and 2-[(1-cyano-1-methylpentyl)azo]-2-ethylheptanenitrile in an organic solvent inert to the azonitrile.

4,061,591

SELECTIVE ADSORBENT FOR USE IN AFFINITY CHROMATOGRAPHY

Roy Oliver, Rockford, Ill., and Garfield P. Royer, Worthington, Ohio, assignors to Pierce Chemical Company, Rockford, Ill.

Continuation of Ser. No. 507,197, Sept. 18, 1974, abandoned. This application July 6, 1976, Ser. No. 702,432

Int. Cl.² B01J *31/02*

U.S. Cl. 252—430 **5 Claims**

1. A selective adsorbent for use in affinity chromatography comprising, as one part, a water-soluble covalently bonded complex of an affinity ligand and a biospecific handle and, as the other part, an insoluble matrix or solid support which has covalently immobilized on its surface an adsorbent which has specific affinity for the biospecific handle of the complex, the biospecific handle and the absorbent being polynucleotides or 2' deoxy derivatives thereof, the polynucleotide of said handle having a base which is complementary, as to spatial arrangement and affinitive interaction, with the base of the polynucleotide adsorbent.

4,061,592

HYDROCARBON CONVERSION CATALYST

Waldeen C. Buss, Richmond, Calif., assignor to Chevron Research Company, San Francisco, Calif.

Division of Ser. No. 233,236, March 9, 1972, Pat. No. 3,951,782, which is a continuation-in-part of Ser. No. 200,121, Nov. 18, 1971, abandoned, which is a continuation-in-part of Ser. No. 132,715, April 9, 1971, abandoned. This application Dec. 12, 1975, Ser. No. 640,366

Int. Cl.² B01J *27/04, 27/08, 27/10, 23/64*

U.S. Cl. 252—439 **2 Claims**

1. In a hydrocarbon hydroconversion catalyst composition including, on a porous carrier, 0.01 to 5 weight percent of a platinum component selected from the group consisting of platinum metal, platinum oxide, platinum sulfide or platinum halide, or mixtures thereof, 0.01 to 3 percent of a rhenium component selected from the group consisting of rhenium as an aqueous solution of perrhenic acid or ammonium perrhenate, or mixtures thereof, calcining and thereafter heating the catalyst composition in dry hydrogen, and a zinc component taken from the group consisting of zinc metal, zinc oxide, zinc sulfide or mixtures thereof, the improvement comprising, including 0.01 to 0.2 weight percent of said zinc component, calculated as the metal, in said composition.

4,061,593

STABILIZATION OF CALCIUM OXIDE SULFATE TRAPPING MATERIALS

Jack C. Summers, Troy, Mich., assignor to General Motors Corporation, Detroit, Mich.

Filed Jan. 26, 1977, Ser. No. 762,676

Int. Cl.² B01J *27/20, 29/00*

U.S. Cl. 252—443 **3 Claims**

1. A method of making durable absorbent pellets suitable for use in fixed volume scrubber vessels for removing sulfur oxides and sulfates from the combustion gases of sulfur containing hydrocarbon fuels comprising the steps of

making calcined pellets comprising a sodium silicate binder and an absorbent taken from the group consisting of calcium oxide and calcium hydroxide, the binder making up at least 10% by weight of said pellets, and

reacting said pellets with carbon dioxide gas at a temperature in the range from about 200° to 600° C. to convert at least about one third of the calcium therein to calcium carbonate, the resulting calcium containing pellets being effective and durable absorbents when used in said fixed volume scrubber vessels.

4,061,594

ALUMINA-BASED BODIES OBTAINED BY AGGLOMERATION WHICH ARE RESISTANT TO ELEVATED TEMPERATURES

Max Michel, Yerres, and Regis Poisson, La Rochelle, both of France, assignors to Rhone-Poulenc Industries, Paris, France

Continuation of Ser. No. 539,847, Jan. 9, 1975, abandoned. This application Dec. 13, 1976, Ser. No. 750,222

Claims priority, application France, Jan. 10, 1974, 74.00803; Nov. 18, 1974, 74.37892

Int. Cl.² B01J *23/10, 23/08*

U.S. Cl. 252—462 **14 Claims**

1. Alumina-based substances stabilized to a calcination temperature of approximately 1200° C, prepared by autoclaving alumina and 1 to 15% by weight of at least one additive selected from the group consisting of the oxides of lanthanum, neodymium, praseodymium and thorium, and calcining the resulting blend, with said alumina having been produced by partial dehydration of hydrargillite or an alumina gel to produce activated alumina and then autoclaving the activated alumina to form said alumina.

14. Alumina-based substances stabilized to calcination temperatures up to 1200° C prepared by combining (1) alumina produced by partial dehydration of hydrargillite or an alumina gel followed by autoclaving to produce the alumina, and (2) from 1 to 15% by weight of at least one additive selected from the group consisting of the oxides of lanthanum, neodymium, praseodymium and thorium, autoclaving the combination of alumina and additive and calcining the combination at a temperature up to 1200° C.

4,061,595

PRODUCTION OF SULFUR RECOVERY CATALYST FROM BAUXITE FINES

Robert A. Burns, Long Valley, N.J., assignor to Engelhard Minerals & Chemicals Corporation, Edison, N.J.

Filed Mar. 15, 1976, Ser. No. 666,795

Int. Cl.² B01J *23/08*

U.S. Cl. 252—463 **6 Claims**

1. A method for making ground particles of calcined or uncalcined bauxite ore into larger mechanically strong catalyst pellets which comprises thoroughly mixing said ground particles with an acid-anion containing alumina hydrosol and sufficient water to provide an extrudable mass, said hydrosol having an aluminum/acid-anion ratio in the range of about 0.5 to 2:1 when using calcined ore and in the range of about 0.5 to 1.5:1 when using uncalcined ore, said hydrosol being used in amount of 130 to 200 pounds, on an anhydrous weight basis, per ton of pellets, anhydrous weight basis, extruding said mass into pellets, and drying and calcining said pellets.

4,061,596

PROCESS FOR PREPARING TITANIUM OXIDE SHAPED CARRIER

Kunichi Matsushita, Yokohama; Hikaru Sakurada, Yokkaichi, and Kazuhiko Onuma, Machida, all of Japan, assignors to Mitsubishi Chemical Industries Ltd., Tokyo, Japan

Filed Dec. 2, 1975, Ser. No. 636,983

Claims priority, application Japan, Dec. 2, 1974, 49-137937; Dec. 6, 1974, 49-140222; Dec. 6, 1974, 49-140223; July 14, 1975, 50-86087; July 31, 1975, 50-93466

Int. Cl.² B01J *21/00;* **C04B** *35/46, 35/64*

U.S. Cl. 252—463 **16 Claims**

1. A process for preparing a shaped titanium oxide catalyst carrier which comprises calcining titanium oxide at 400° C – 800° C then adding to said calcined titanium oxide a mineral acid or carboxylic acid and alumina or a precursor of alumina selected from the group consisting of aluminum hydroxide, alimina sols and aluminum salts, shaping the mixture and then calcining the shaped material at 300° C – 800° C.

4,061,597

NO_x CONTROL IN CATALYST MANUFACTURE

Marvin Sherwood Goldstein, Norwalk; John Francis Lindsley, Stamford, both of Conn.; William Woodrow Allison, and Charles Dan Price, both of Fort Worth, Tex., assignors to American Cyanamid Company, Stamford, Conn.

Filed Dec. 4, 1975, Ser. No. 637,570

Int. Cl.² B01J *23/16, 21/04, 23/84;* **C01B** *21/00*

U.S. Cl. 252—465 **10 Claims**

1. A process for abating oxides of nitrogen which arise during heat treatment in the manufacture of catalysts containing a source of said oxides which process comprises introducing the catalyst material requiring heat treatment at a temperature of 300° C. and higher in said manufacture into a suitable heat treatment zone, separately introducing an effective amount of urea into said heat treatment zone, and thereafter effecting heat treatment at a temperature of 300° C. and higher whereby oxides of nitrogen arising from said catalyst material are abated by reaction with the separately introduced urea.

9. The process of claim 1 wherein said catalyst material is one based on an alumina support.

4,061,598

CATALYST FOR HYDROGENATING ANTHRAQUINONES

Kamel Michel Makar, Memphis, Tenn., assignor to E. I. Du Pont de Nemours and Company, Wilmington, Del.

Filed June 25, 1976, Ser. No. 699,933

Int. Cl.² B01J *21/04, 23/44, 23/58*

U.S. Cl. 252—466 PT **13 Claims**

1. A method for making catalysts which are useful for the hydrogenation of anthraquinones comprising the sequential steps of

a. impregnating dry activated alumina particles with 2–20 parts by weight of alkali metal carbonate or alkaline earth metal carbonate and 0.1–10 parts by weight of a basic palladium salt, said parts by weight being based on 100 parts by weight of dry activated alumina prior to impregnation, by admixing the alumina with finely divided particles of the palladium salt and an aqueous solution of the carbonate in which the amount of water is sufficient to wet the pores, but not the outer surface of the alumina, and allowing the impregnated alumina to stand for a time sufficient to complete diffusion of the palladium within the wetted pores of the catalyst;

b. reducing the palladium by dispersing the impregnated alumina in a dilute aqueous solution of reducing agent, the amount of reducing agent being sufficient to reduce substantially all the palladium to a zero valence state;

c. separating the reduced catalyst from the solution of reducing agent, washing it with water and then removing substantially all the water therefrom while maintaining the catalyst at a temperature below about 100° C; and

d. heating the dewatered catalyst in an oxidizing atmosphere for a period of at least about 1 hour at a temperature of 400°–650° C.

4,061,599

COMPOSITION FOR PREPARATION OF A PHOTOCONDUCTOR SURFACE FOR USE IN ELECTROPHOTOGRAPHY

Guy Anthony Marlor, 816 Dixon Way, Los Altos, Calif. 94022

Filed Feb. 6, 1976, Ser. No. 655,819

Int. Cl.² G03G *5/085*

U.S. Cl. 252—501 **22 Claims**

1. An enamel slip devoid of natural and synthetic resins for use in the preparation of a photoconductive surface wherein the slip is sprayed upon the surface, said enamel slip comprising a mixture of:

solids comprising a photoconductive powder and a glass powder, both powders having an average particle size below ten microns;

a carrier vehicle comprising a plurality of organic solvents, at least one of said plurality of organic solvents being selected to enhance atomization of the slip during spraying and at least one of said plurality of organic solvents being selected as a physical suspension element for the solids; and

particulate solid means for suspending the solids in the carrier vehicle by physical dispersion, the particulate solid means for suspending being substantially chemically and electrically nonreactive with the solids.

4,061,600

GRAPHITE ELECTRODE AND METHOD OF MAKING

Arthur William Moore, North Olmsted; Herbert Franz Volk, Parma, both of Ohio, and Jack Kenneth Merrow, Seattle, Wash., assignors to Union Carbide Corporation, New York, N.Y.

Continuation-in-part of Ser. No. 478,590, June 12, 1974, abandoned. This application May 11, 1976, Ser. No. 685,140

Int. Cl.² H01B *1/06*

U.S. Cl. 252—510 **28 Claims**

1. In the process of producing graphitized articles of a quality suitable for use as graphite electrodes by forming, baking and graphitizing a mixture of coke filler and binder, an improvement resulting in articles of improved flexural strength which comprises heating at least a portion of said coke filler in the absence of air at a temperature between about 1600° C and about 2200° C for a period of at least 0.1 hour prior to mixing said particles with said binder.

4,061,601

ELECTRICALLY CONDUCTIVE REAR VIEW MIRROR

Jerome Francis Clary; Robert Emerson Wiley, and Richard Earl Bowns, all of Port Huron, Mich., assignors to Acheson Industries, Inc., Port Huron, Mich.

Division of Ser. No. 364,749, May 29, 1973, Pat. No. 3,948,811. This application Feb. 9, 1976, Ser. No. 656,122

Int. Cl.² H01B *1/06*

U.S. Cl. 252—511 **7 Claims**

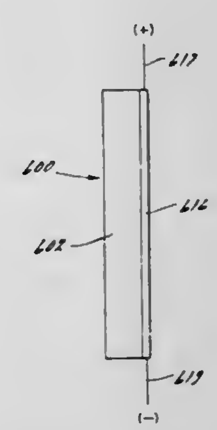

1. An electrically conductive rear view mirror having a substrate with an electrically conductive coating composition thereon,

said composition comprising in weight percent,

about 5% to about 90% of a heat stable fluoroelastomer polymer about 10% to about 95% of conductive particles, said conductive particles are a finely particulated material selected from at least one material from the group consisting of silver, copper, noble metals and alloys thereof, graphite, or conductive carbon, said composition being for the purpose of heating the mirror.

4,061,602

CONDITIONING SHAMPOO COMPOSITION CONTAINING A CATIONIC DERIVATIVE OF A NATURAL GUM (SUCH AS GUAR) AS THE ACTIVE CONDITIONING INGREDIENT

Helen Elizabeth Oberstar, Montville, and Morton Alan Westman, Fort Lee, both of N.J., assignors to American Cyanamid Company, Stamford, Conn.

Filed Aug. 3, 1976, Ser. No. 711,331

Int. Cl.[2] A61K *7/08;* **C11D** *1/88, 1/94, 3/37*

U.S. Cl. 252—547 **5 Claims**

1. A shampoo-creme rinse composition consisting essentially of about 5 to 20 weight percent of at least one amphoteric detergent, about 5 to 20 weight percent of at least one anionic detergent and from about 0.1 to 5 weight percent of 3-(trimethylamino)-2-hydroxypropyl guar chloride salt.

4,061,603

DETERGENTS

Joseph Rubinfeld, Northport, N.Y., assignor to Colgate-Palmolive Company, New York, N.Y.

Division of Ser. No. 446,228, Feb. 27, 1974, Pat. No. 3,980,588, Continuation of Ser. No. 231,367, March 2, 1972, abandoned, which is a division of Ser. No. 56,123, July 2, 1970, abandoned, which is a continuation of Ser. No. 553,622, May 31, 1966, abandoned. This application June 25, 1976, Ser. No. 699,774 The portion of the term of this patent subsequent to Sept. 14, 1993, has been disclaimed.

Int. Cl.[2] C11D *3/07*

U.S. Cl. 252—548 **4 Claims**

1. A detergent mixture suitable for use in aqueous liquid detergent compositions consisting essentially of (a) a water-soluble, anionically active olefin sulfonate product having 12 to 21 carbon atoms in the olefin molecular structure, (b) a water-soluble higher alkyl poly (ethenoxy) ether sulfate having 10 to 20 carbon atoms in the higher alkyl group and 1 to 5 ethenoxy groups per molecule, said olefin sulfonate product and said ether sulfate being in the form of a salt selected from the group consisting of sodium, potassium, ammonium and ethanolammonium and (c) a higher fatty acid alkanolamide selected from the group consisting of fatty acid isopropanolamides and fatty acid monoethanolamides in which the higher fatty acyl radical has 10 to 14 carbon atoms, the weight ratio of said sulfate to said sulfonate being in the range of 90:10 to 30:70, said alkanolamide being present in an amount of about $\frac{1}{2}$ to 10% by weight and being effective to improve the foam stability as compared with a composition which does not contain said alkanolamide.

4,061,604

FLAMEPROOFING OF PLASTICS

Rudolf Kirchmayr, Aesch, and Hugo Illy, Reinach, both of Switzerland, assignors to Ciba-Geigy Corporation, Ardsley, N.Y.

Filed Dec. 15, 1975, Ser. No. 640,992

Claims priority, application Switzerland, Dec. 18, 1974, 16895/74; Nov. 11, 1975, 14565/75

Int. Cl.[2] C07F *9/28;* **C08K** *5/53*

U.S. Cl. 260—2.5 AJ **11 Claims**

1. A flameproofed composition comprising a polymer selected from the group consisting of a polyurethane and an epoxide resin and from 2 to 30 percent by weight of the polymer of a compound of the formula I

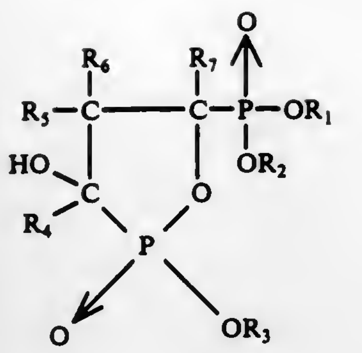

(I)

wherein

R_1 and R_2 each independently represent alkyl having 1 - 4 carbon atoms, cyclohexyl, aralkyl having 7 or 8 carbon atoms, alkoxyalkyl having 3–6 carbon atoms, halogenoalkyl having 2–3 carbon atoms, or alkenyl having 3–5 carbon atoms, R_3 is identical to R_1 or R_2, R_4 is alkyl having 1–4 carbon atoms, or phenyl, R_5 and R_6 each independently represent hydrogen or alkyl having 1–4 carbon atoms, and R_7 represents hydrogen, alkyl having 1–4 carbon atoms, alkoxy having 1–4 carbon atoms, or phenyl.

4,061,605

REACTION PRODUCTS OF BENZENEPHOSPHONIC ACID AND MELAMINE AS FLAME-RETARDANT ADDITIVES

Eli Simon, 7175 Little Harbor Drive, Huntington Beach, Calif. 92648

Filed Mar. 3, 1976, Ser. No. 663,446

Int. Cl.[2] C08G *18/14*

U.S. Cl. 260—2.5 AJ **3 Claims**

1. Addition-product salts of benzenephosphonic acid and melamine as flame-retardants, wherein the mol percentage of benzenephosphonic acid is within the range of $33\frac{1}{3}$ to $66\frac{2}{3}$ mol% and preferably within the range of $33\frac{1}{3}$ to 40 mol%.

4,061,606

POLYPHOSPHAZENE POLYMER/ORGANIC POLYMER FOAMS

Ronald Lee Dieck, and Edwin John Quinn, both of Lancaster, Pa., assignors to Armstrong Cork Company, Lancaster, Pa.

Filed Dec. 27, 1976, Ser. No. 754,608

Int. Cl.[2] C08J *9/10*

U.S. Cl. 260—2.5 R **8 Claims**

1. A foamed blend comprising:

A. a polyphosphazene comprising randomly distributed repeating units represented by the formulas:

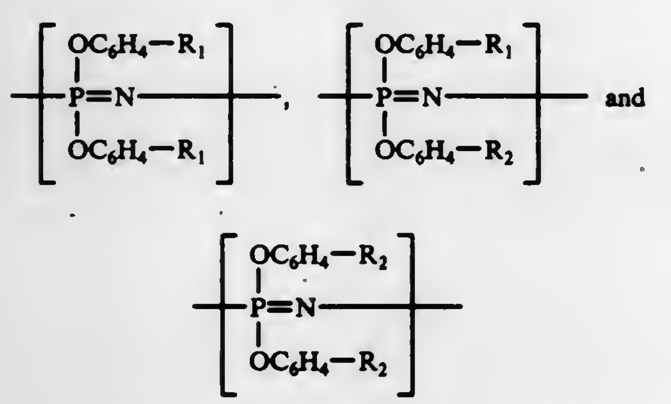

wherein R_1 and R_2 are the same or different and are hydrogen, a C_1 - C_{10} linear or branched alkyl radical, or a C_1 - C_4 linear or branched alkoxy radical subtituted on any sterically permissible position on the phenoxy group,

B. a foamable compatible organic polymer,

C. said polymer (A) being present in an amount of about 15% to about 85% by weight and said polymer (B) being present in an amount of about 85% to about 15% by weight based on the combination of (A) and (B).

4,061,607

SOMATOSTATIN ANALOGS AND INTERMEDIATES THERETO

James E. Shields, Indianapolis, Ind., assignor to Eli Lilly and Company, Indianapolis, Ind.

Filed July 28, 1976, Ser. No. 709,465

Int. Cl.[2] C08L *67/00;* **C07C** *103/52*

U.S. Cl. 260—8 **28 Claims**

1. A compound selected from those of the formula

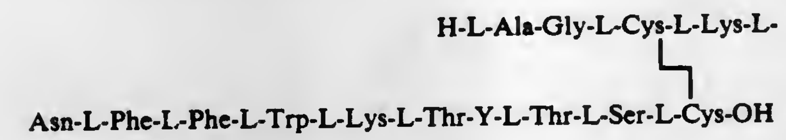

and their pharmaceutically acceptable non-toxic acid addition salts, and R-L-Ala-Gly-L-Cys(R_1)-L-Lys(R_2)-L-Asn-L-Phe-L-Phe-L-Trp(R_5)-L-Lys(R_2)-L-Thr(R_3)-Y-L-Thr(R_3)-L-Ser(R_4)-L-Cys(R_1)-X; in which

Y is D-Phe, L-Cha, or L-Leu;

R is hydrogen or an α-amino protecting group;

R_1 is hydrogen or a thio protecting group;

R_2 is hydrogen or an E-amino protecting group;

R_3 and R_4 each are hydrogen or a hydroxy protecting group;

R_5 is hydrogen or formyl; and

X is hydroxy or

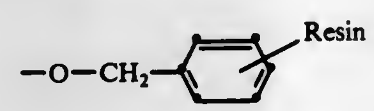

in which the resin is polystyrene; with the proviso that, when X is hydroxy, each of R, R_1, R_2, R_3, R_4, and R_5 is hydrogen, and, when X is

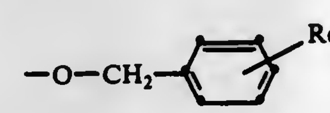

each of R, R_1, R_2, R_3, and R_4 is other than hydrogen.

4,061,608

ARG [4]-SOMATOSTATIN AND ANALOGUES THEREOF

Dimitrois Sarantakis, West Chester, Pa., assignor to American Home Products Corporation, New York, N.Y.

Filed July 13, 1976, Ser. No. 705,721

Int. Cl.[2] C08L *67/00;* **C07C** *103/52*

U.S. Cl. 260—8 **9 Claims**

1. A polypeptide of the formula:

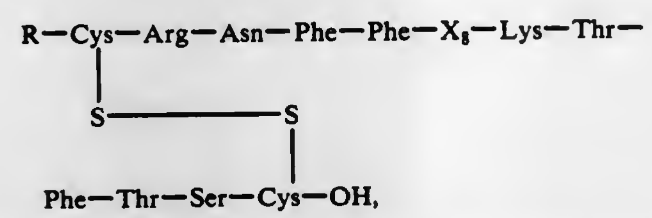

its linear precursor or a non-toxic acid addition salt thereof, in which

R is hydrogen or Ala-Gly-

and

X_8 is L-Trp or D-Trp.

4,061,609

INHIBITOR FOR PLATINUM CATALYZED SILICONE RUBBER COMPOSITIONS

William J. Bobear, Latham, N.Y., assignor to General Electric Company, Waterford, N.Y.

Filed Apr. 9, 1976, Ser. No. 675,377

Int. Cl.[2] C08L *1/00*

U.S. Cl. 260—9 **34 Claims**

1. A platinum catalyzed silicone rubber composition with an improved work life comprising (a) 100 parts by weight of a vinyl-containing base linear polysiloxane of the formula,

$$R_a SiO_{4-a/2}$$

and blends of such polysiloxanes, where R is selected from the class consisting of alkyl radicals of 1 to 8 carbon atoms, vinyl radicals, phenyl radicals, fluoroalkyl radicals of 3 to 10 carbon atoms and mixtures thereof, where the vinyl radical unsaturation in said polymer is at least 0.005 mole percent, a varies from 1.98 to 2.01, (b) at least 0.1 parts per million of platinum, (c) from 1 to 50 parts by weight of a hydrogen-containing polysiloxane, and (d) at least 0.007 parts by weight of an inhibitor compound having at least one radical of the formula, — C — O — O — H, per 100 parts of said vinyl-containing polymer.

10. The composition of claim 1 wherein there is present per 100 parts of (a) from 5 to 150 parts of a filler selected from the class consisting of titanium oxide, lithopone, zinc oxide, zirconium silicate, silica aerogel, iron oxide, diatomaceous earth, calcium carbonate, fumed silica, cyclicpolysiloxane treated silica, silazane treated silica, precipitated silica, glass fibers, magnesium oxide, chromic oxide, zirconium oxide, alpha quartz, calcined clay, asbestos, carbon, graphite, cork, cotton and synthetic fibers.

4,061,610

COATING COMPOSITIONS CONTAINING STARCH HALF-ESTERS AND PROCESS FOR PREPARING SAME

Raymond Charles Glowaky, Matteson; Stephen Edward Rudolph, Glenwood, and Gordon Paul Bierwagen, Homewood, all of Ill., assignors to The Sherwin-Williams Company, Cleveland, Ohio

Filed May 19, 1976, Ser. No. 687,587

Int. Cl.[2] C08L *3/06*

U.S. Cl. 260—17.4 ST **25 Claims**

1. An aqueous coating composition which comprises an aqueous dispersion of about 25 to 95 parts by volume of a polymeric resin binder, 5 to 75 parts by volume of pigment and dispersing amounts of a dispersant consisting of half-esters of starch having pendant carboxylic acid groups and an average degree of substitution ranging from 0.25 to 3.0 wherein at least 10 mole percent of said pendant carboxylic acid groups are neutralized; said half-esters of starch derived from

a. low molecular weight hydrolyzed starch having a plurality of anhydroglucose units and an average molecular weight ranging up to about 100,000 or a derivative of said hydrolyzed starch having a degree of substitution below about 0.1 and

b. at least about 0.25 mole of at least one anhydride of a polycarboxylic acid for each anhydroglucose unit of the hydrolyzed starch or of said hydrolyzed starch derivative.

4,061,611

AQUEOUS COMPOSITIONS CONTAINING STARCH ESTER DISPERSANTS

Raymond Charles Glowaky, Matteson; Stephen Edward Rudolph, Glenwood, and Gordon Paul Bierwagen, Homewood, all of Ill., assignors to The Sherwin-Williams Company, Cleveland, Ohio

Filed Sept. 22, 1976, Ser. No. 725,604

Int. Cl.[2] C08L *3/06*

U.S. Cl. 260—17.4 ST **22 Claims**

1. A coating composition comprising an aqueous dispersion of from about 25 to 95 parts by volume of a polymeric resin binder, 5 to 75 parts by volume of pigment and a dispersing amount of dispersant consisting of mixed esters of starch characterized as having an average degree of substitution ranging from 0.5 to 3.0 wherein at least about 0.1 of total degree of substitution consists of ester groups having pendant carboxylic acid groups and at least about 10 mole percent of said pendant carboxylic acid groups are neutralized; said mixed esters of starch derived from

a. low molecular weight hydrolyzed starch having a plurality of anhydroglucose units with average molecular weights ranging up to about 100,000 or a derivative of said hydrolyzed starch having a degree of substitution below about 0.1 and
b. at least about 0.5 mole of acylating agent for each anhydroglucose unit of the hydrolyzed starch or the derivative thereof;

said acylating agent consisting of (i) from about 0.1 to 2.9 moles of at least one anhydride of a polycarboxylic acid and (ii) from about 0.1 to 2.9 moles of at least one agent selected from the class consisting of anhydrides of monocarboxylic acids and the acyl halides of monocarboxylic acids.

4,061,612

LOW TEMPERATURE PLASTICIZERS FOR SPECIALTY RUBBERS CONSISTING OF DIESTERS OF DICARBOXYLIC ACIDS WITH HEXYLOXYETHOXYETHANOL OR BUTOXYETHOXYETHOXYETHANOL

Eugene R. Bertozzi, Yardley, Pa.; Robert F. Hoffman, Delran, and Robert Barclay, Trenton, both of N.J., assignors to Thiokol Corporation, Newtown, Pa.

Filed July 6, 1976, Ser. No. 702,826

Int. Cl.² C08K *5/11, 5/12;* **C07C** *69/34*

U.S. Cl. 260—31.4 R **17 Claims**

1. A composition of matter of the formula:

$$R\left[\overset{O}{\overset{\|}{C}}-O-(CH_2CH_2-O)_n-(CH_2)_m-CH_3\right]_2$$

wherein R is $-(CH_2)_3$, $-(CH_2)_4$,

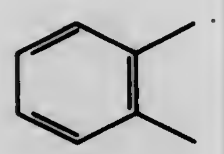

a mixture of $-(CH_2)_3$ and $-(CH_2)_4-$, or a mixture of $-(CH_2)_2$, $-(CH_2)_3-$, and $-(CH_2)_4-$; and *n* and *m* are 3, or *n* is 2 and *m* is 5.

16. An elastomeric composition having solvent resistance, high temperature stability, and extended low temperature properties which comprises:

a. An effective amount of a composition of matter of the formula:

$$R\left[\overset{O}{\overset{\|}{C}}-O-(CH_2CH_2-O)_n-(CH_2)_m-CH_3\right]_2$$

wherein R is $-(CH_2)_3$, $-(CH_2)_4$,

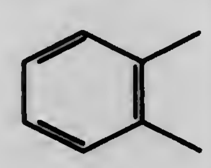

a mixture of $-(CH_2)_3$ and $-(CH_2)_4-$, or a mixture of $-(CH_2)_2$, $-(CH_2)_3-$, and $-(CH_2)_4-$; and *n* and *m* are 3, or *n* is 2 and *m* is 5; and

b. a specialty rubber.

4,061,613

SEMISOLID POLYMERIZABLE COMPOSITIONS, METHOD OF PREPARING THE SAME AND THERMOSET PRODUCTS THEREOF

James M. Self, Pittsburgh, Pa., assignor to H. H. Robertson Company, Pittsburgh, Pa.

Continuation-in-part of Ser. No. 597,673, June 21, 1975, abandoned, which is a continuation-in-part of Ser. No. 544,966, Jan. 29, 1975, Pat. No. 4,011,195, which is a continuation-in-part of Ser. No. 460,489, April 12, 1974, abandoned. This application Feb. 4, 1976, Ser. No. 655,012

Int. Cl.² C08K *3/34*

U.S. Cl. 260—40 R **12 Claims**

1. A semisolid polymerizable composition comprisng the unpolymerized reaction product of:

a. One part by weight of unsaturated polyester resin syrup;
b. 0.1–2.0 parts by weight of aqueous sodium silicate containing 45 to 85 percent by weight water and having a weight ratio SiO_2/Na_2O from 1.5 to 3.75;
c. 0.1–2.0 parts by weight of calcium sulfate hemihydrate; the amount of said calcium sulfate hemihydrate being sufficient to combine with at least 85 percent by weight of the uncombined water which is contained in the other ingredients of the composition.

4,061,614

SEMISOLID POLYMERIZABLE COMPOSITIONS, METHOD OF PREPARING THE SAME AND THERMOSET PRODUCTS THEREOF

James M. Self, Pittsburgh, Pa., assignor to H. H. Robertson Company, Pittsburgh, Pa.

Continuation-in-part of Ser. No. 480,169, June 17, 1974, Pat. No. 3,978,018. This application Mar. 16, 1976, Ser. No. 667,519

Int. Cl.² C08K *3/34*

U.S. Cl. 260—40 R **12 Claims**

1. A semisolid polymerizable composition comprising the unpolymerized reaction product of:

a. One part by weight of unsaturated polyester resin syrup;
b. 0.1–1.5 parts by weight of aqueous alkali-stabilized colloidal silica containing from 10 to 50 percent by weight solids, balance water; and
c. 0.2–4.0 parts by weight of calcium sulfate hemihydrate; the amount of said calcium sulfate hemihydrate being sufficient to combine with at least 85 percent by weight of the uncombined water which is contained in the other ingredients of the composition.

4,061,615

SHAPED POLYESTER ARTICLES HAVING GOOD FLAME RESISTANCE AND PROCESS FOR THE PRODUCTION THEREOF

Paul Couchoud, Dardilly, France, assignor to Rhone-Poulenc-Textile, France

Filed Dec. 22, 1975, Ser. No. 642,904

Claims priority, application France, Dec. 26, 1974, 74.43220

Int. Cl.² C08G *51/62*

U.S. Cl. 260—45.7 P **7 Claims**

1. Shaped articles of polyester of good resistance to flame comprising a polymethylene copolyester containing 60–95 mol % of terephthalate units and 5 to 40 mol % of isophthalate units and containing a fireproofing effective amount of 1,3-bis(-diphenylphosphinoxide) 2,2 di(bromomethyl)propane or hydroquinone polyphenylphosphonate or monobromohydroquinone polyphenylphosphonate.

4,061,616

STABILIZATION OF SYNTHETIC POLYMERS

Keisuke Murayama; Syoji Morimura; Takao Yoshioka, and Tomoyuki Kurumada, all of Tokyo, Japan, assignors to Sankyo Company Limited, Tokyo, Japan

Continuation of Ser. No. 472,370, May 22, 1974, abandoned. This application Sept. 4, 1975, Ser. No. 610,334

Claims priority, application Japan, June 15, 1973, 48-68144

Int. Cl.² C08K *5/34*

U.S. Cl. 260—45.8 N **8 Claims**

1. A synthetic polymer composition stabilized against photo- and thermal deterioration wherein there is incorporated, in a sufficient amount to prevent said deterioration, a compound having the formula

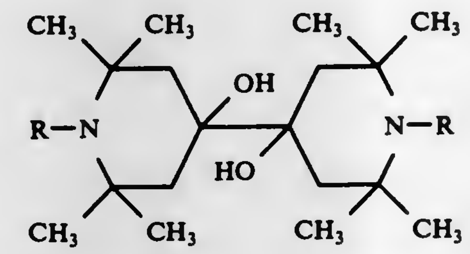

(I)

wherein R and R′, which may be the same or different, and each represents hydrogen atom, an alkyl group, an alkenyl group, an alkynyl group, an aralkyl group, a hydroxyalkyl group, an alkoxyalkyl group, an aliphatic or aromatic acyloxyalkyl group, a cyanoalkyl group, a halogenoalkyl group, an epoxyalkyl group, an alkoxycarbonylalkyl group, an aliphatic acyl group, an alkoxycarbonyl group or an aralkoxycarbonyl group, or an acid addition salt thereof.

4,061,617

OXIDATION-REDUCTION DIPHENOQUINONE-DIPHENOHYDROQUINONE POLYMERS

Allan S. Hay, Schenectady, N.Y., assignor to General Electric Company, Schenectady, N.Y.

Division of Ser. No. 435,335, Jan. 21, 1974, Pat. No. 3,959,223. This application Apr. 14, 1976, Ser. No. 676,854

Int. Cl.² C08L *65/02, 71/04;* **C08F** *4/50;* **C09K** *15/00*

U.S. Cl. 260—47 R **11 Claims**

1. A homopolymer comprising recurring units of the formula:

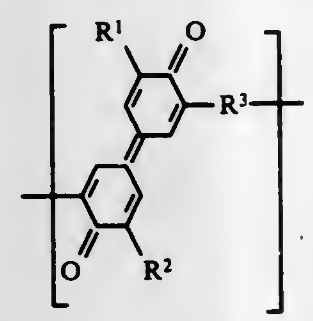

where independently each R^1 and R^2 is selected from monovalent acyclic or cyclic hydrocarbon radicals and R^3 is selected from divalent acyclic or cyclic hydrocarbon radicals.

2. A homopolymer comprising recurring units of the formula:

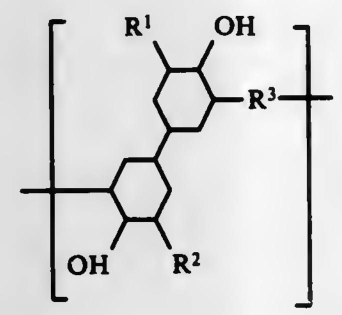

where independently each R^1 and R^2 is selected from acyclic or cyclic hydrocarbon radicals and R^3 is selected from divalent acyclic or cyclic hydrocarbon radicals.

9. A process for the preparation of claim 1 polymer, which comprises contacting a diphenol monomer reactant having the formula:

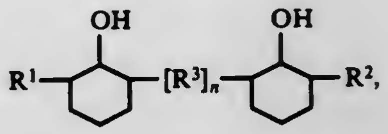

where R^1, R^2 and R^3 are as defined hereinbefore, with oxygen in the presence of a tertiary amine-basic cupric salt complex.

4,061,618

PROCESS FOR PREPARING STABLE POLYURETHANE LATICES

Henry Stanley, Cedar Grove, and Dilip K. Ray-Chaudhuri, Somerville, both of N.J., assignors to National Starch and Chemical Corporation, Bridgewater, N.J.

Filed May 7, 1975, Ser. No. 575,253

Int. Cl.² C08L *75/08*

U.S. Cl. 260—29.2 TN **9 Claims**

1. A process for preparing a predominantly linear polyurethane latex comprising the steps:

a. reacting by initially heating an organic polyisocyanate and an organic compound containing at least two reactive hydrogen atoms as determined by the Zerewitinoff method and having a molecular weight of from about 300 to about 20,000, a portion of which is a polyethylene glycol of molecular weight from 600 to 20,000 in proportions such that the ratio of isocyanate groups to reactive hydrogen atoms is in the range of from 0.7 to 1.3, and said polyethylene glycol is present in an amount of from 2 to 12% by weight of polymer solids,
b. terminating the polymerization reaction by addition of a terminating agent thereto when a desired viscosity is reached and thereafter,
c. adding water to the reaction mixture in an amount so as to produce a latex containing from about 20 to 60% solids, by weight.

4,061,619

COPOLYAMIDE DISPERSIONS AND METHODS OF MAKING AND USING SAME

Siegfried Schaaf, Chur, Switzerland, assignor to Inventa AG fur Forschung und Patentverwertung, Zurich, Switzerland

Filed May 15, 1975, Ser. No. 577,866

Claims priority, application Switzerland, May 21, 1974, 6968/74

Int. Cl.² C08L *77/06*

U.S. Cl. 260—29.2 N **11 Claims**

1. In a copolyamide dispersion comprising copolyamide powder with a grain size of up to 0.1 mm., water and a thixotropy-producing agent, the improvement which comprises the presence of 0.2 to 5.0 percent by weight of at least one fatty alcohol based on the total weight of said dispersion.

4,061,620

PHENOL-FORMALDEHYDE-RESORCINOL RESINS AND ADHESIVES

Maurice F. Gillern, Seattle, Wash., assignor to Weyerhaeuser Company, Tacoma, Wash.

Continuation of Ser. No. 450,126, March 11, 1974, abandoned. This application Sept. 22, 1975, Ser. No. 615,215

Int. Cl.² C08L *61/10*

U.S. Cl. 260—29.3 **85 Claims**

1. A liquid, water dilutable, phenolformaldehyde-resorcinol resin composition produced by reacting in an aqueous solution (1) a phenol-formaldehyde reaction product comprised of at least 65% monomeric methylolphenols, (2) free formaldehyde,

and (3) resorcinol at least until essentially all free formaldehyde is consumed, the molar quantities of combined formaldehyde, F_c, and phenol, P, in said reaction product, and the molar quantities of free formaldehyde, F_f, and resorcinol, R, satisfying the equation

$$0.5 \leq \frac{F_c + F_f}{R + P} \leq 0.8$$

wherein $F_c \geq 0.9P$, $F_f \geq 0.35P$ and $6P \geq R \geq 1.5P$.

4,061,621

PRODUCTION OF POLYCAPROAMIDE FIBER FROM POLYCAPROAMIDE REACTED WITH CYCLIC TETRACARBOXYLIC ACID DIANHYDRIDE

Robert Alden Lofquist, Richmond, and John Christopher Haylock, Midlothian, both of Va., assignors to Allied Chemical Corporation, Morris Township, N.J.

Filed Oct. 10, 1975, Ser. No. 622,273

Int. Cl.² C08G *69/14*

U.S. Cl. 260—78 L **7 Claims**

1. In a process for the formation of polycaproamide fiber from a fiber-forming polycaproamide polymer having excess number of carboxyl end groups over amino end groups, by melt-extruding the polymer through an orifice into a quenching medium and thereafter stretching the resulting filament, the improvement wherein said fiber-forming polycaproamide polymer is prepared by a process comprising:

a. continuously forming a molten polymerization mixture at 240°-290° C. from ε-caprolactam;

b. continuously smoothly stirring said polymerization mixture while flowing over the surface thereof an inert gas at a flow rate of at least 2 unit volumes of said gas, measured at standard temperature and pressure, per hour per each unit volume of said polymerization mixture, until the total primary amino group plus carboxyl group analysis of the resulting hot water washed and dried polymer is between 105 and 115 milliequivalents per kilogram of polymer; and

c. continuously reacting said polymer at 250°-290° C. with about 0.1–0.7 mol per 100 mols of lactam in the polymer, of a cyclic tetracarboxylic acid dianhydride selected from the group consisting of pyromellitic dianhydride; 3,3',4,4'-benzophenone tetracarboxylic dianhydride; 1,4,5,8-naphthalenetetracarboxylic dianhydride; bicyclo[2.2.2]oct-7-ene-2,3,5,6-tetracarboxylic dianhydride; and tetrahydrofuran-2,3,4,5-tetracarboxylic dianhydride; until the primary amino group analysis of the polymer is between 18 and 34 milliequivalents per kilogram of polymer and the carboxyl group analysis of the polymer is between 50 and 90 milliequivalents per kilogram of polymer, thereby reducing the occurrence of nubs in the fiber.

4,061,622

PREPARATION OF POLYAMIDE FROM ORGANIC DIISOCYANATE WITH ALKALI METAL SALT OF ALCOHOL AS CATALYST

Besir K. Onder, North Haven, Conn., assignor to The Upjohn Company, Kalamazoo, Mich.

Division of Ser. No. 521,744, Nov. 7, 1974, Pat. No. 4,001,186. This application Oct. 26, 1976, Ser. No. 735,757

Int. Cl.² C08G *18/22*

U.S. Cl. 260—78 R **10 Claims**

1. In a process for preparing an essentially linear, dipolar aprotic solvent soluble solid polyamide by the condensation of an organic diisocyanate with a compound containing two carboxylic acid groups in said solvent, the improvement which comprises carrying out said process in the presence of a catalytic amount of a compound MOR, wherein R represents alkyl or aryl, and M is an alkali metal.

4,061,623

PREPARATION OF POLYAMIDEIMIDE FROM ORGANIC DIISOCYANATE WITH ALKALI METAL SALT OF ALCOHOL AS CATALYST

Besir K. Onder, North Haven, Conn., assignor to The Upjohn Company, Kalamazoo, Mich.

Division of Ser. No. 521,744, Nov. 7, 1974, Pat. No. 4,001,186. This application Oct. 26, 1976, Ser. No. 735,758

Int. Cl.² C08G *18/22, 73/14*

U.S. Cl. 260—78 TF **12 Claims**

1. In a process for preparing an essentially liner, dipolar/aprotic solvent soluble solid polyamideimide by the condensation of an organic diisocyanate with a compound containing one carboxylic acid group and one intramolecular anhydride group or the free carboxylic acids thereof in said solvent, the improvement which comprises carrying out said process in the resence of a catalytic amount of a compound MOR, wherein R represents alkyl or aryl, and M is an alkali metal.

4,061,624

PROCESS FOR PREPOLYMERS AND PRODUCTS

William J. Schultz, Vadnais Heights, and Samuel Smith, Roseville, both of Minn., assignors to Minnesota Mining and Manufacturing Company, St. Paul, Minn.

Filed July 26, 1976, Ser. No. 708,914

Int. Cl.² C08G *75/18*

U.S. Cl. 260—79.3 M **3 Claims**

1. Process for the preparation of linear terminally differentially electrophilically reactive prepolymer of tetramethylene oxide with 0 up to 50 mol% of comonomeric cationically polymerizable lactone or cyclic ether which comprises effecting polymerization of said tetramethylene oxide and said comonomeric lactone or cyclic ether at −20° to 80° C with initiator represented by the asymmetrical structure

$$YO_mSO_2R_nQ$$

wherein Q is a first radical which in anionic form is a nonterminating anion when 2 mol% of a dissolved salt of said anion is present during the polymerization of tetramethylene oxide containing 2 mole percent of ethylene oxide and 2 mol% of BF_3 as polymerization initiator at 20° C and said polymerization provides at least about 50 percent conversion of said monomers to polymer;

Y is a second radical free from alkylatable groups, selected from alkyl, alkaryl, aryl, aralkyl and cycloalkyl and having the free valence on a carbon atom devoid of halogen atoms;

n = 0 or 1;

m = 0 or 1 and

R is a divalent bridging radical comprising at least one oxytetramethylene radical, —$(OR')_q$— where q is 1 to 300 and R' is alkylene of 2 to 10 carbon atoms at least one half of said alkylene groups being C_4H_8.

4,061,625

NOVEL CHROMOGENIC THROMBIN SUBSTRATES

Bo Thuresson Af Ekenstam, Molndal; Leif Eric Aurell; Karl Göran Claeson, both of Saro, and Birgitta Gunilla Karlsson, Molndal, all of Sweden, assignors to AB Kabi, Stockholm, Sweden

Filed June 17, 1976, Ser. No. 697,003

Int. Cl.² C07C *103/52*

U.S. Cl. 260—112.5 R **10 Claims**

1. Diagnostically active chromogenic substrate with a high specificity to thrombin and thrombin-like enzymes having the general formula:

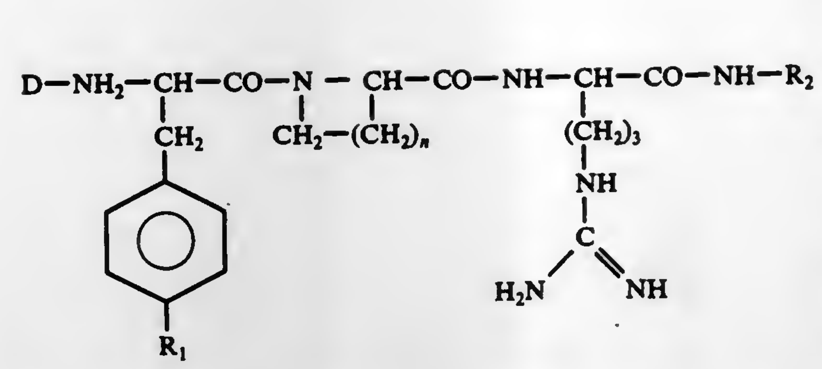

and salts thereof, wherein R_1 is hydrogen or hydroxy, R_2 is nitrophenyl, and n is 1, 2 or 3.

4,061,626

SOMATOSTATIN ANALOGS AND INTERMEDIATES THERETO

James E. Shields, Indianapolis, Ind., assignor to Eli Lilly and Company, Indianapolis, Ind.

Filed Apr. 29, 1976, Ser. No. 681,640

Int. Cl.² C07C *103/52;* **A61K** *37/00*

U.S. Cl. 260—112.5 S **19 Claims**

1. A compound selected from those of the formula

H-L-Ala-Y-L-Cys-D-Lys-L-Asn-L-Phe-
L-Phe-L-Trp-L-Lys-L-Thr-L-Phe-L-Thr-L-Ser-L-Cys-OH

and its pharmaceutically acceptable non-toxic acid addition salts, and R-L-Ala-Y-L-Cys(R_1)-D-Lys(R_2)-L-Asn-L-Phe-L-Phe-L-Trp(R_5)-L-Lys(R_2)-L-Thr(R_3)-L-Phe-L-Thr(R_3)-L-Ser(R_4)-L-Cys(R_1)-X; in which

Y is Gly or D-Ala;

R is hydrogen or an α-amino protecting group;

R_1 is hydrogen or a thio protecting group;

R_2 is hydrogen or an ε-amino protecting group;

R_3 and R_4 each are hydrogen or a hydroxy protecting group;

R_5 is hydrogen or formyl; and

X is hydroxy or

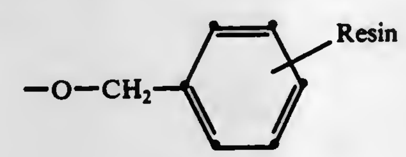

in which the resin is polystyrene; with the proviso that, when X is hydroxy, each of R, R_1, R_2, R_3, R_4, and R_5 is hydrogen, and, when X is

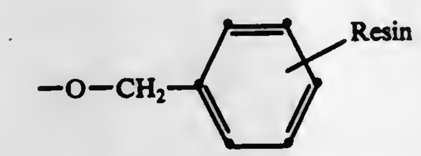

each of R, R_1, R_2, R_3, and R_4 is other than hydrogen.

4,061,627

BIS-SUBSTITUTED NAPHTHALENE-AZO PHENYLENEAZO-STILBENE-DISULFONIC AND NAPHTHALENE-SULFONIC ACID

Ransom Brown Conrow, Pearl River; Seymour Bernstein, New City, and Norman Bauman, Nanuet, all of N.Y., assignors to American Cyanamid Company, Stamford, Conn.

Filed Sept. 10, 1975, Ser. No. 612,169

Int. Cl.² C07C *107/06, 107/08;* **C09B** *35/02, 35/22*

U.S. Cl. 260—178 **3 Claims**

1. 4,4'-bis(2-amino-8-hydroxy-6-sulfo-2-naphthylazo)-2,2'-stilbenedisulfonic acid tetrasodium salt.

2. 5,5'-[oxybis-(2-amino-p-phenyleneazo)]bis-[6-amino-2-naphthalenesulfonic acid] disodium salt.

3. 5,5'-[oxybis-(2-nitro-p-phenyleneazo)]bis-]6-amino-2-naphthalenesulfonic acid] disodium salt.

4,061,628

INTERMEDIATES FOR PRODUCING SEMI-SYNTHETIC PENICILLINS AND CEPHALOSPORINS AND METHODS OF PRODUCTION

John H. Sellstedt, King of Prussia, Pa., assignor to American Home Products Corporation, New York, N.Y.

Division of Ser. No. 197,142, Nov. 9, 1971, Pat. No. 3,859,298. This application July 12, 1973, Ser. No. 378,727

Int. Cl.² C07D *501/04, 499/12*

U.S. Cl. 260—239.1 **15 Claims**

1. In a process for producing penicillins or cephalosporins of the formula:

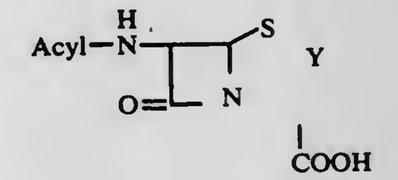

(A)

wherein:

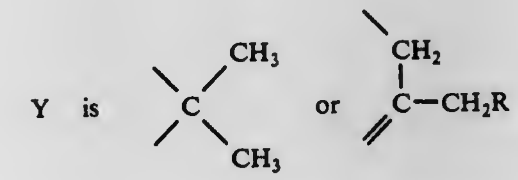

and R is hydrogen or acetoxy which comprises (a) reacting a salt from the group consisting of the alkali metal salts and tertiary amine salts of 6-aminopenicillanic acid or 7-aminocephalosporanic acids of the formula:

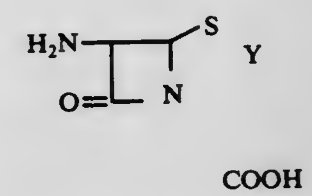

(B)

wherein Y is the same as in formula A above with a protective forming agent in the presence of an acid binding agent, then (b) reacting the resulting compounds with an acylating agent from a reactive derivative of a carboxylic acid to form the corresponding N-acyl derivatives, the improvement consisting essentially of employing as the protective forming agent a three valence phosphorus compound of the formula:

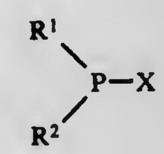

wherein R^1 and R^2 are lower alkyl, phenyl, halo(lower)alkyl or phenyl(lower)alkyl; or R^1 and R^2 together jointly form a ring compound selected from the group consisting of:

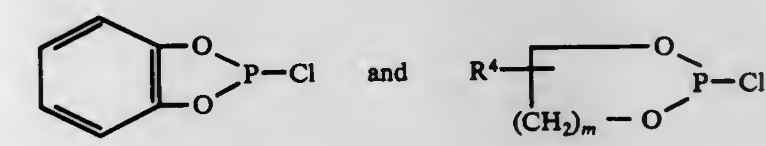

wherein m is a whole number from 1 to 2 and R^4 is selected from hydrogen and methyl; X signifies a halogen atom subjecting the N-acyl compounds of (b) above to hydrolysis to obtain the compounds of formula A, above.

4,061,629
6-AMINO-6-ARYLTHIO PENICILLANIC ACIDS AND DERIVATIVES THEREOF
Joseph E. Dolfini; Ekkehard Böhme, both of Cincinnati, Ohio, and William A. Slusarchyk, Belle Mead, N.J., assignors to E. R. Squibb & Sons, Inc., Princeton, N.J.
Division of Ser. No. 675,393, April 9, 1976, Pat. No. 4,029,669, which is a division of Ser. No. 500,435, Aug. 26, 1974, Pat. No. 3,965,093, which is a division of Ser. No. 183,642, Sept. 24, 1971, Pat. No. 3,855,233. This application Mar. 23, 1977, Ser. No. 780,623
Int. Cl.² A61K *31/43*
U.S. Cl. 260—239.1 **1 Claim**

1. A compound of the formula

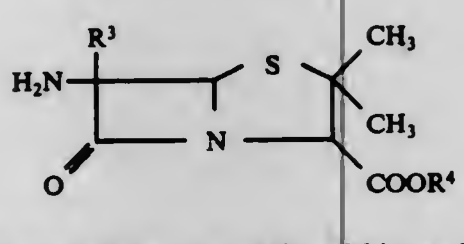

wherein R^3 is phenylthio or nitrophenylthio; and R^4 is hydrogen, lower alkyl, trimethylsilyl, benzyl, benzhydryl, methoxybenzyl or trichloroethyl, and pharmaceutically acceptable salts thereof.

4,061,630
7-SUBSTITUTED-UREIDO-3-CARBAMOYLOXYMETHYL CEPHALOSPORIN ANTIBIOTICS
David K. Herron, Indianapolis, Ind., assignor to Eli Lilly and Company, Indianapolis, Ind.
Filed Feb. 20, 1976, Ser. No. 660,197
Int. Cl.² A61K *31/545;* **C07D** *501/20, 501/32, 501/34*
U.S. Cl. 544—16 **8 Claims**

1. A compound of the formula

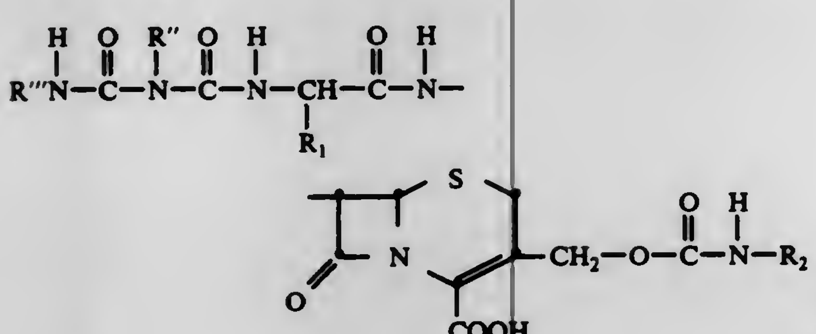

wherein
R'' is hydrogen or methyl;
R''' is hydrogen, C_1–C_2 alkyl, allyl, phenyl, benzyl, or furfuryl;
R_1 is 2-thienyl, 2-furyl, phenyl, or phenyl substituted by C_1–C_4 alkyl, C_1–C_4 alkoxy, halogen, hydroxy, or nitro;
R_2 is hydrogen or C_1–C_3 alkyl;
and the pharmaceutically acceptable non-toxic salts thereof.

4,061,631
1-AZA-4-THIACYCLOHEXANE-4,4-DIOXIDE DERIVATIVES
Jean Rody, Basel, Switzerland, assignor to Ciba-Geigy Corporation, Ardsley, N.Y.
Division of Ser. No. 407,000, Oct. 16, 1973, Pat. No. 3,943,098. This application Jan. 22, 1976, Ser. No. 651,500
Int. Cl.² C07D *279/12*
U.S. Cl. 544—53 **15 Claims**

1. A compound of formula I

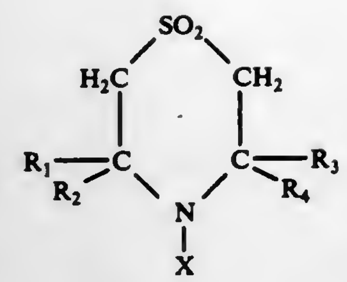

(I)

wherein R_1, R_2, R_3, and R_4 each independently are lower alkyl, R_1 and R_2 independently together with the carbon atom to which they are bound form a cycloalkyl ring, R_3 and R_4 independently together with the carbon atom to which they are bound form a cycloalkyl ring, or R_1 and R_2 and R_3 and R_4 together with the carbon atom to which they are bound form a cycloalkyl ring, and X is hydrogen; unsubstituted alkyl having 1 to 18 carbon atoms; alkyl having 2 to 20 carbon atoms which is substituted with hydroxy, carboxy, nitrile, sulphoxide, sulphone, or halo groups; $—CH_2COOR_8$ where R_8 is alkyl of 1 to 18 carbon atoms; $—R_9OOCR_{10}$ where R_9 is alkylene of 2 or 3 carbon atoms and R_{10} is alkyl of 1 to 17 carbon atoms;

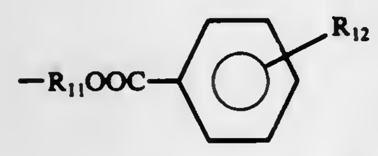

where R_{11} is alkylene of 2 or 3 carbon atoms and R_{12} is alkyl of 1 to 4 carbon atoms;

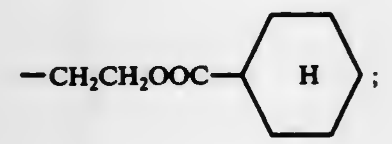

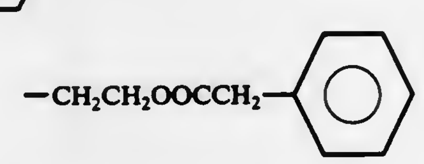

$—R_{13}NHCOR_{14}$ where R_{13} is alkylene of 2 or 3 carbon atoms and R_{14} is alkyl of 1 to 17 carbon atoms; $—R_{15}OR_{16}$ where R_{15} is alkylene or 2 carbon atoms and R_{16} is alkyl of 1 to 8 carbon atoms; $—R_{17}SR_{18}$ where R_{17} is alkylene of 2 or 3 carbon atoms and R_{18} is alkyl of 1 to 8 carbon atoms or phenyl; $R_{19}N(R_{20})_2$ where R_{19} is alkylene of 2 or 3 carbon atoms and R_{20} is independently H or alkyl of 1 or 2 carbon atoms; and $—CH_2CH_2NHCH_2CH_2CN$; alkenyl having 3 to 18 carbon atoms; alkynyl having 3 to 14 carbon atoms; benzyl, α-phenylethyl, α,α-dimethyl-benzyl, or such aralkyl groups substituted on the alkylene moiety by hydroxy, ester groups or halogen; acyl of the formula $R_7CO—$ wherein R_7 is alkyl having 1 to 18 carbon atoms; the acyl radical derived from benzoic acid, p-tert. butylbenzoic acid, p-tert. octylbenzoic acid, methanesulfonic acid, benzenesulphonic acid or p-toluenesulfonic acid; halogen; —O; —NO; or NR_5R_6 wherein R_5 and R_6 each independently represent hydrogen; unsubstituted alkyl having 1 to 12 carbon atoms; alkyl having 2 to 12 carbon atoms which is substituted with hydroxy, carboxy, nitrile, sulphoxide, sulphone or halo groups; or R_5 is $R_7CO—$ wherein R_7 is alkyl having 1 to 18 carbon atoms; or the acyl radical derived from benzoic acid, p-tert. butylbenzoic acid, p-tert. octylbenzoic acid, methanesulfonic acid, benzenesulphonic acid or p-toluenesulfonic acid; or R_5 and R_6 together with the nitrogen atom to which they are bound form the piperidine or morpholine ring, or its salts with organic or inorganic acids.

4,061,632
3,11-DIHYDRO-6H-PYRAZOLO[1,5-a] PYRAZOLO[4',3':5,6]-PYRIDO[4,3-d]PYRIMIDIN-6-ONE DERIVATIVES
Theodor Denzel, Regensburg, and Hans Hoehn, Tegernheim, both of Germany, assignors to E. R. Squibb & Sons, Inc., Princeton, N.J.
Continuation-in-part of Ser. No. 620,467, Oct. 7, 1975, Pat. No. 4,000,277. This application Sept. 17, 1976, Ser. No. 724,183
Int. Cl.² C07D *487/22*
U.S. Cl. 544—60 **10 Claims**

1. A compound of the formula

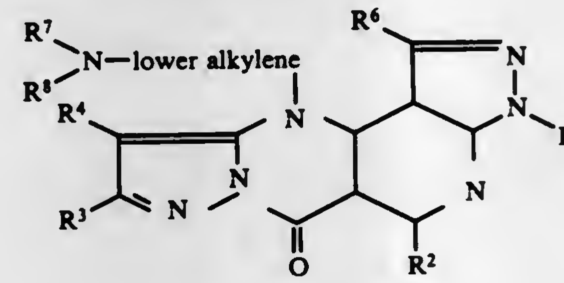

wherein
R^1 and R^3 each is hydrogen, lower alkyl, phenyl, or phenyl-lower alkylene; R^2, R^4 and R^6 each is hydrogen or lower alkyl;

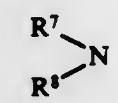

is piperidino, morpholino, thiamorpholino or piperazino; and physiologically acceptable acid addition salts thereof.

4,061,633
METHOD OF RECOVERING PRIMARY AND SECONDARY AMINES
Lazar Isaevich Blyakhman, Krasnopresnensky val, 4/29, kv. 16; Sergei Lvovich Davydov, Tikhvinsky pereulok, 19, kv. 5a, both of Moscow, and Valentina Fedorovna Kashina, Moskovskoe shosse, 4, kv. 45, Dolgoprudny Moskovskoi oblasti, all of U.S.S.R.
Filed Feb. 25, 1974, Ser. No. 445,633
Int. Cl.² C07D *295/02*
U.S. Cl. 544—106 **23 Claims**

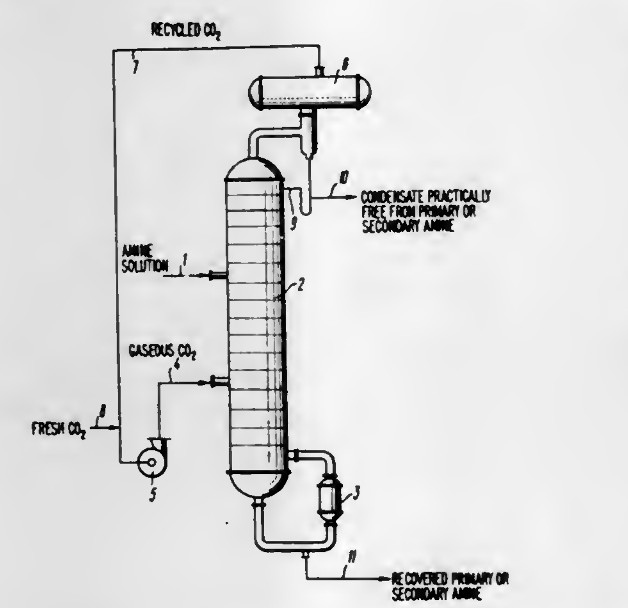

1. A method of concentrating a solution of an amine selected from the group consisting of primary amines and secondary amines, said amine having a pK_a value equal to at least 8.5, in a solvent selected from the group consisting of water, an organic liquid other than a primary or secondary amine and mixtures of water and said organic liquid, wherein said solution is obtained from a crude reaction mass, and said organic liquid is a conventional diluent present within said crude reaction mass, said method comprising the steps of continuously distilling said solution of said amine in the presence of CO_2 in a rectification column, wherein the middle part of said column is supplied with said solution of said amine, the bottom part of said column is supplied with gaseous CO_2 and a mixture of CO_2 and vapors of said solvent are directed from the top part of the column to a cooler where the vapors of said solvent are condensed and a gaseous stream comprising CO_2 is recycled to the bottom part of said column; returning part of the condensed solvent vapors in said cooler in reflux form to said rectification column; recovering the remainder of said condensed solvent vapors free from said amine; and supplying the amine from the bottom part of said rectification column to a boiler where said amine is partly evaporated; directing the vapors of said amine from said boiler into the bottom part of said rectification column and withdrawing the part of the amine which has not evaporated from the bottom part of said rectification column and said boiler as the final product, said CO_2 functioning to reduce the volatility of the amine without affecting the volatility of the solvent.

4,061,634
SULFUR-CONTAINING ANTIMICROBIAL ESTER-AMIDES
Robert R. Mod, New Orleans; Frank C. Magne, Metairie; Gene Sumrell, New Orleans, and Arthur F. Novak, Baton Rouge, all of La., assignors to The United States of America as represented by the Secretary of Agriculture, Washington, D.C.
Filed Nov. 1, 1976, Ser. No. 737,457
Int. Cl.² C07D *295/18*
U.S. Cl. 544—158 **10 Claims**

1. A sulfur-containing ester amide having antimicrobial activity and the general structure:

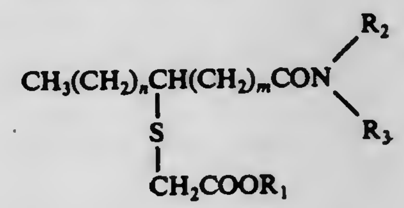

where R_1 is a lower alkyl or alkenyl group of 1 to 6 carbons; R_2 and R_3 cojointly form a morpholine ring; $n + m$ add up to 15 and $n = m$ plus or minus 1.

9. A sulfur-containing ester amide having antimicrobial activity and the general structure:

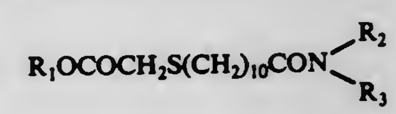

wherein R_1 is a lower alkyl or alkenyl group of 1 to 6 carbons; and R_2 and R_3 cojointly form a morpholine ring.

4,061,635
PROCESS FOR THE PREPARATION OF 1-PHENYL-4-AMINO-CYCLOHEX-2-ENE-1-CARBOXYLIC ACID ESTERS AND THE SALTS THEREOF
Gerhard Satzinger, and Manfred Franz Herrmann, both of Gundelfingen, Germany, assignors to Warner-Lambert Company, Morris Plains, N.J.
Division of Ser. No. 226,509, Feb. 15, 1972, Pat. No. 3,957,851. This application Nov. 22, 1974, Ser. No. 526,089
Claims priority, application Germany, Feb. 18, 1971, 2107871
Int. Cl.² C07D *295/00*
U.S. Cl. 544—172 **17 Claims**

1. 1-Phenyl-4-amino-cyclohex-2-ene-1-carboxylic acid esters of the formula:

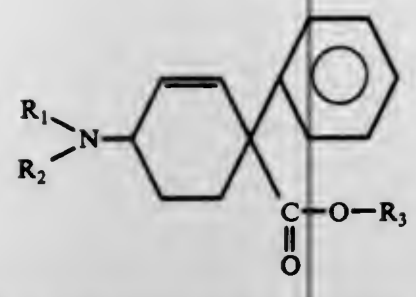

wherein R_1 and R_2 together with the nitrogen atom to which they are attached form radicals which are selected from the group consisting of morpholino, piperidino, piperidino substituted in the 4 position by benzyl, phenyl, hydroxy, or lower alkyl of 1 to 4 carbon atoms, and piperazino substituted in the 4 position by benzyl, phenyl, hydroxy, lower alkyl of 1 to 4 carbon atoms, phenethyl, methoxyphenyl, chlorophenyl, or benzoyl, and wherein R_3 is a lower alkyl of 1–4 carbon atoms, and the pharmaceutically acceptable addition salts.

4,061,636
NAPHTHALENONE PHTHALAZINYLHYDRAZONES
Lawrence D. Wise, Denville, and Glenn C. Morrison, Randolph, both of N.J., assignors to Warner-Lambert Company, Morris Plains, N.J.
Filed Feb. 12, 1976, Ser. No. 657,436
Int. Cl.^{2} C07D *237/34, 413/12;* A61K *31/50*
U.S. Cl. 260—250 P **6 Claims**
1. A compound of the formula:

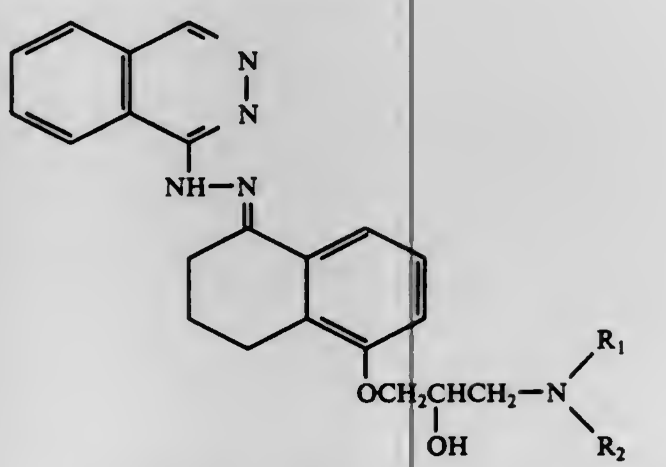

wherein R_1 is hydrogen or alkyl of 1–6 carbon atoms, R_2 is alkyl of 1–6 carbon atoms, and the pharmaceutically acceptable acid addition salts, and N-oxides.

4,061,637
CERTAIN 4-ARYL-5-(4-PHENYLPIPERAZINO)ALKYL-4-THIAZOLIN-2-ONES
Elso Manghisi, Monza; Giuseppe Cascio, and Giancarlo Fregnan, both of Milan, all of Italy, assignors to Istituto Luso Farmaco d'Italia S.r.l., Milan, Italy
Filed May 12, 1975, Ser. No. 576,582
Claims priority, application Italy, May 14, 1974, 22693/74; Apr. 18, 1975, 22521/75
Int. Cl.^{2} C07D *417/06*
U.S. Cl. 260—268 PH **9 Claims**
1. 4-Aryl-5-aminoalkyl-4-thiazoline-2-ones of the formula:

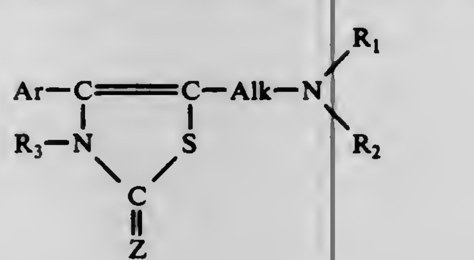
(I)

and their pharmaceutically acceptable salts, in which Ar represents phenyl, lower alkylphenyl, trifluoromethylphenyl, lower alkoxyphenyl, lower dialkylaminophenyl, halogen phenyl or lower alkylmercaptophenyl; Alk represents a saturated or unsaturated, linear or branched chain of 1 to 3 carbon atoms;

is a piperazine-4 subsituted by phenyl; Z represents an oxygen or sulfur atom; and R_3 represents a hydrogen atom or methyl, acetyl, benzoyl or methylaminocarbonyl.

4,061,638
ORGANOCALCIUMPYRIDINE-TYPE POLYMERIZATION INITIATORS
James D. Brown, and Carl A. Uraneck, both of Bartlesville, Okla., assignors to Phillips Petroleum Company, Bartlesville, Okla.
Division of Ser. No. 441,773, Feb. 12, 1974, Pat. No. 3,997,708, which is a continuation-in-part of Ser. No. 790,429, Jan. 10, 1969, abandoned. This application Sept. 3, 1976, Ser. No. 720,316
Int. Cl.^{2} C07D *213/02, 215/00*
U.S. Cl. 260—270 P **33 Claims**
1. A process for producing organocalcium polymerization initiators which comprises contacting substantially pure calcium metal with a pyridine type compound of 5 to 40 carbon atoms per molecule selected from the group consisting of pyridines, bipyridines, and polycyclic fused-ring aromatic compounds wherein at least one of said fused rings is a pyridine ring,

wherein said contacting is conducted in a diluent which is an ethereal diluent, hydrocarbon diluent, or mixture, and in the presence of an organic halogen-containing promoter, under effective contacting conditions in the substantial absence of oxygen and ammonia, at contacting temperatures, contacting time, and ratios of gram atoms of calcium metal to moles of said pyridine-type compound, effective for preparing said organocalcium polymerization initiator.

4,061,639
QUINOLINESULFONYL COMPOUNDS
Christian T. Goralski, Midland, Mich., assignor to The Dow Chemical Company, Midland, Mich.
Filed Aug. 23, 1976, Ser. No. 716,747
Int. Cl.^{2} C07D *215/36;* A61K *31/47*
U.S. Cl. 260—283 S **1 Claim**
1. The compound which is 8-quinolinesulfonyl bromide and which corresponds to the formula

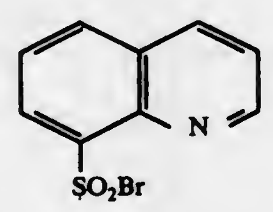

4,061,640
2-(BENZAMIDO PIPERIDINE) QUINOLYL DERIVATIVES
John Frederick Cavalla, Isleworth, and John Leheup Archibald, Windsor, both of England, assignors to John Wyeth & Brother Limited, Maidenhead, England
Continuation-in-part of Ser. No. 524,029, Nov. 15, 1974, abandoned, which is a continuation-in-part of Ser. No. 323,684, Jan. 15, 1973, abandoned, and a continuation-in-part of Ser. No. 175,345, Aug. 26, 1971, abandoned. This application July 29, 1976, Ser. No. 709,671
Claims priority, application United Kingdom, Sept. 3, 1970, 42090/70; July 22, 1971, 34376/71
Int. Cl.^{2} C07D *215/14*
U.S. Cl. 260—287 CE **5 Claims**
1. A compound of the formula

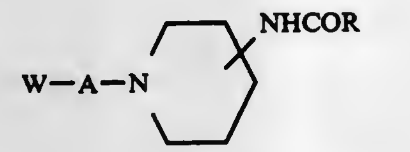

in which
W is 2-quinolyl or lower alkyl 2-quinolyl;
A is alkylene of 1 to 6 carbon atoms;
R is phenyl, halophenyl, lower alkoxy phenyl or lower alkyl phenyl;
or a pharmaceutically acceptable acid addition salt thereof.

4,061,641
UREIDOPIPERIDINO-KETOALKYL INDOLES
John Leheup Archibald, Windsor, and John Lambert Jackson, Royston, both of England, assignors to John Wyeth & Brother Limited, Maidenhead, England
Continuation-in-part of Ser. No. 597,841, July 21, 1975, which is a continuation-in-part of Ser. No. 511,415, Oct. 2, 1974, abandoned. This application July 15, 1976, Ser. No. 705,647
Claims priority, application United Kingdom, Oct. 10, 1973, 47208/73; Jan. 25, 1974, 3531/74; Feb. 18, 1974, 7277/74; July 17, 1975, 30001/75
Int. Cl.^{2} C07D *401/06*
U.S. Cl. 260—293.61 **4 Claims**
1. A compound of formula I

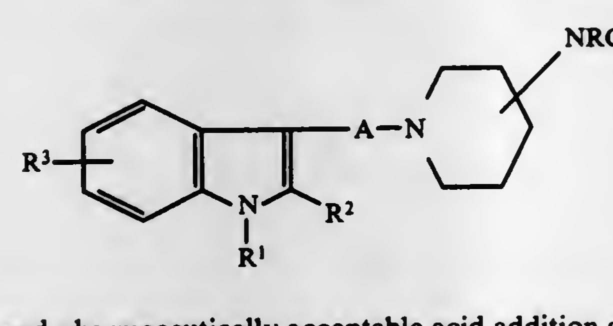
I

and pharmaceutically acceptable acid addition and quaternary ammonium salts thereof, wherein R represents hydrogen or lower alkyl, R^1 represents hydrogen or lower alkyl, R^2 represents hydrogen or lower alkyl, R^3 represents hydrogen, halogen, lower alkoxy, hydroxy, or lower alkyl, R^4 represents hydrogen, lower alkyl, cycloalkyl of 5 to 7 carbon atoms, thienyl, furyl, phenyl; phenyl mono- or disubstituted by halogen, lower alkyl, lower alkoxy, hydroxy, or trifluoromethyl; or benzoyl, halobenzoyl, lower alkanoyl, cycloalkanoyl of 6 to 8 carbon atoms, or thienoyl, A represents a monoketoalkylene radical having from 1 to 5 carbon atoms and X is oxygen or sulphur.

4,061,642
2,4,6-TRISUBSTITUTED-3-PYRIDINE CARBOXAMIDES
Erwin Fleckenstein, Hofheim, Taunus; Ernst Heinrich, Frankfurt am Main-Fechenheim, and Reinhard Mohr, Offenbach-Rumpenheim, all of Germany, assignors to Cassella Farbwerke Mainkur AG, Germany
Division of Ser. No. 372,024, June 21, 1973. This application May 19, 1976, Ser. No. 687,705
Claims priority, application Germany, June 22, 1972, 2230392
Int. Cl.^{2} C07D *213/56*
U.S. Cl. 260—295.5 A **3 Claims**
1. A compound of the formula

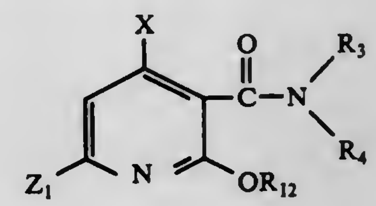

wherein X is alkyl having 1 to 6 carbon atoms, alkenyl having 2 to 6 carbon atoms, cycloalkyl having 3 to 8 carbon atoms, phenyl, benzyl, phenethyl or hydrogen; Z_1 is

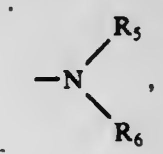
,

$—NH—OR_{10}$ or

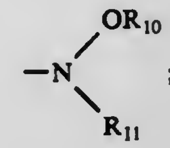
;

R_3 and R_4, when taken separately, are alkyl having 1 to 6 carbon atoms, cycloalkyl having 3 to 8 carbon atoms, phenyl, benzyl, phenethyl or hydrogen; R_3 and R_4, when taken together with the nitrogen atom to which they are attached form an ethyleneimino radical; R_5 and R_6 are hydrogen, alkyl having 1 to 6 carbon atoms, hydroxyalkyl having 1 to 6 carbon atoms, cycloalkyl having 3 to 8 carbon atoms, methoxyalkyl or ethoxyalkyl having 1 to 6 carbon atoms in the alkyl moiety, benzyl or phenethyl; R_{10} is alkyl having 1 to 6 carbon atoms, benzyl or phenethyl; R_{11} is alkyl having 1 to 6 carbon atoms and R_{12} is alkyl having 1 to 6 carbon atoms, alkenyl having 2 to 6 carbon atoms, cycloalkyl having 3 to 8 carbon atoms, phenyl, benzyl or phenethyl.

4,061,643
CERTAIN 16-ARYLOXY-11,12-SECO-PROSTAGLANDINS
Edward J. Cragoe, Jr., and John B. Bicking, both of Lansdale, Pa., assignors to Merck & Co., Inc., Rahway, N.J.
Division of Ser. No. 587,924, June 18, 1975, Pat. No. 4,020,177, which is a continuation-in-part of Ser. No. 502,126, Aug. 30, 1974, abandoned. This application Sept. 9, 1976, Ser. No. 721,734
Int. Cl.^{2} C07D *307/54, 213/30*
U.S. Cl. 260—295 R **10 Claims**
1. The compound of the formula

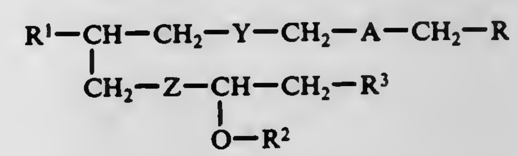

wherein
R is selected from the group consisting of carboxy and a carboxy salt, and alkoxycarbonyl (—COOAlk) wherein Alk is alkyl having 1–10 carbon atoms;

R^1 is selected from the group consisting of acetyl, propionyl, 1-hydroxyethyl, 1-hydroxypropyl and hydroxymethyl;
R^2 is hydrogen or lower alkanoyl;
R^3 is $O-R^6$ or wherein R^6 is pyridyl, pyrimidinyl, furfuryl, or thenyl;
A is methylene ($-CH_2-$);
Y is selected from the group consisting of ethylene, vinylene, or ethynylene;
and
Z is selected from the group consisting of ethylene, vinylene or ethynylene.

4,061,644
PROCESS FOR THE PRODUCTION OF 2-AMINO-3-HYDROXYPYRIDINES
Hans Greuter, Eiken, and Daniel Bellus, Riehen, both of Switzerland, assignors to Ciba-Geigy Corporation, Ardsley, N.Y.
Filed June 18, 1976, Ser. No. 697,603
Claims priority, application Switzerland, June 27, 1975, 8379/75
Int. Cl.² C07D *213/74*
U.S. Cl. 260—296 R **6 Claims**

1. Process for the production of 2-amino-3-hydroxy-pyridines of formula I

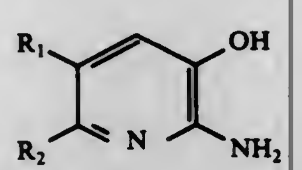
(I)

wherein R_1 and R_2 independently of one another represent hydrogen or an alkyl group having 1 to 4 carbon atoms, in which process a furan derivative of formula II

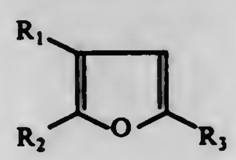
(II)

wherein
R_1 and R_2 have the meaning given under formula I, and R_3 represents a group COO^-M^+, $-COO-X$,

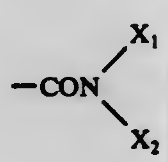

$-MCOCL$,

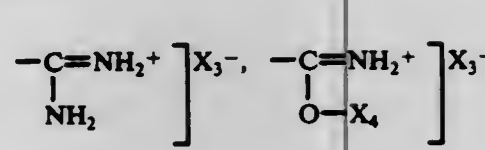

or $-CN$,
whereby
M+ denotes

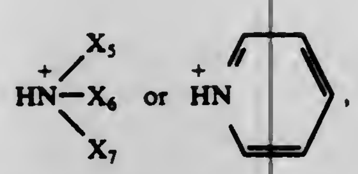

X, X_1 and X_2 independently of each other represent hydrogen, an unsubstituted or substituted alkyl group, an alkenyl, cycloalkyl, phenyl, benzyl, or phenylethyl group, or a $-CH_2$-cycloalkyl group or $-CH_2$-oxacycloalkyl group, X_3^- represents $-Cl^-$ or Br^- or F^-, X_4 represents an unsubstituted alkyl group, an allyl, cycloalkyl, benzyl or phenylethyl group, and X_5, and X_6 and X_7 independently of one another represent hydrogen or an alkyl group having 1 to 4 carbon atoms,
is reacted with ammonia in a closed reaction system at a temperature of between 100° and 300° C in a solvent containing amide groups selected from the group consisting of formamide, acetamide, N,N-dimethylformamide, N,N-dimethylacetamide, N-methyl-2-pyrrolidone, phosphoric acid tripyrrolidide and phosphoric acid-tris-(dimethylamide), in the presence of an acid catalyst selected from the group consisting of aliphatic C_1–C_8 mono-carboxylic acids, halogenated aliphatic C_1–C_8 mono-carboxylic acids, alkylsulfuric acids, aliphatic sulfonic acids, aromatic sulfonic acids, aliphatic phosphonic acids, aliphatic phosphinic acids, aromatic phosphonic acids, aromatic phosphinic acids, hydrohalic acids, nitric acid, phosphoric acid, sulfuric acid and ammonium salts of hydrohalic acids, and Lewis acids selected from the group consisting of aluminum chloride, aluminum bromide, calcium chloride, tin tetrachloride, titanium tetrachloride, iron (III) chloride, zinc chloride, boron trifluoride, phosphorus trichloride, antimony pentafluoride and antimony pentachloride.

4,061,645
2-TRICHLOROMETHYL-5-METHYLSULFINYL-1,3,4-THIADIAZOLE
Ludwig Nusslein; Ernst Albrecht Pieroh, and Kurt Röder, all of Berlin, Germany, assignors to Schering Aktiengesellschaft, Berlin & Bergkamen, Germany
Continuation of Ser. No. 883,253, Dec. 8, 1969, abandoned. This application Oct. 17, 1972, Ser. No. 298,274
Int. Cl.² C07D *285/12*
U.S. Cl. 260—302 SD **1 Claim**

1. The compound 2-trichloromethyl-5-methylsulfinyl-1,3,4-thiadiazol.

4,061,646
PROCESS FOR PURIFICATION OF CRUDE 2-MERCAPTOBENZOTHIAZOLE
Yutaka Kawaoka, Yanai; Tatsuo Kifune, Yamaguchi; Masahiko Teshima, Yamaguchi, and Tatsuya Koizumi, Yamaguchi, all of Japan, assignors to Sanshin Kagaku Kogyo Company, Limited, Yamaguchi, Japan
Filed June 30, 1976, Ser. No. 701,227
Claims priority, application Japan, Jan. 14, 1976, 51-3056
Int. Cl.² C07D *277/72*
U.S. Cl. 260—306 **6 Claims**

1. A process for purifying crude 2-mercaptobenzothiazole, which comprises:
preparing a crude, molten 2-mercaptobenzothiazole by reacting aniline, carbon disulfide and sulfur under elevated pressure at high temperatures;
immediately quenching said molten, crude 2-mercaptobenzothiazole after its preparation by pouring said molten, crude 2-mercaptobenzothiazole into cold carbon disulfide thereby forming a slurry of 2-mercaptobenzothiazole crystals; and
filtering and drying said crystals of 2-mercaptobenzothiazole.

4,061,647
THIAZOLIDINE DERIVATIVES
Hans-Jochen Lang, Altenhain, Taunus, and Roman Muschaweck, Frankfurt am Main, both of Germany, assignors to Hoechst Aktiengesellschaft, Frankfurt am Main, Germany
Filed July 27, 1976, Ser. No. 709,075
Claims priority, application Germany, July 29, 1975, 2533821
Int. Cl.² C07D *277/18*
U.S. Cl. 260—306.7 T **7 Claims**

1. Thiazolidine derivatives of the general formula I

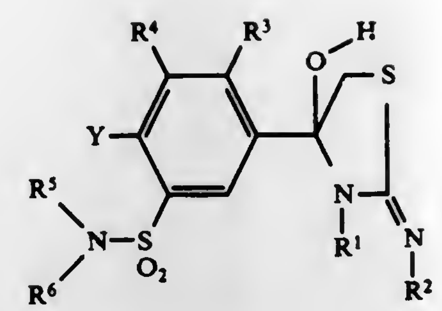
(I)

in which R^1 represents alkyl or alkenyl radicals of 1 to 4 carbon atoms, cycloalkyl groups of 3 to 6 carbon atoms, R^2 represents an alkyl or alkenyl group of 1 to 6 carbon atoms which may be substituted by alkoxy groups of 1 to 2 carbon atoms, cycloalkyl groups of 3 to 8 carbon atoms, phenylalkyl groups of 1 to 2 carbon atoms in the alkyl moiety, and in which R^1 and R^2 together may represent an alkylene chain of 2 to 4 carbon atoms which may be branched, Y represents chlorine, bromine or methyl and R^3 and R^4 represent hydrogen, chlorine, bromine or methyl, the two radicals R^3 and R^4 representing at the same time neither hydrogen, nor chlorine, bromine or methyl, R^5 and R^6 represent hydrogen or lower alkyl of 1 to 4 carbon atoms, R^6 may additionally represent a phenylalkyl group, and their acid addition salts with physiologically tolerated acids.

4,061,648
CERTAIN 5-ACYLOXY-1-THIADIAZOLYL-2-OXOIMIDAZOLIDINE COMPOUNDS
John Krenzer, Oak Park, Ill., assignor to Velsicol Chemical Corporation, Chicago, Ill.
Filed Mar. 22, 1976, Ser. No. 668,755
Int. Cl.² C07D *285/12*
U.S. Cl. 260—/306.8 D **8 Claims**

1. A compound of the formula

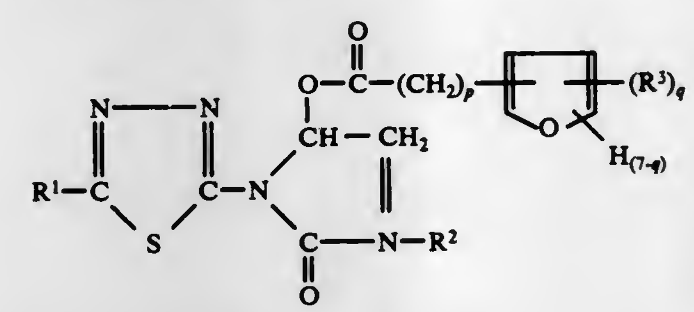

wherein R^1 is selected from the group consisting of lower alkyl, cycloalkyl of from 3 to 7 carbon atoms, lower alkenyl, lower haloalkyl, lower alkoxy, lower alkylthio, lower alkylsulfonyl and lower alkylsulfinyl; R^2 is selected from the group consisting of lower alkyl, lower alkenyl, lower haloalkyl and

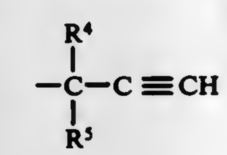

wherein R^4 and R^5 are each selected from the group consisting of hydrogen and alkyl of up to 3 carbons atoms; p is an integer from 0 to 3; R^3 is selected from the group consisting of lower alkyl, chlorine, bromine and fluorine; and *q* is an integer from 0 to 2.

4,061,649
CLAVULANIC ACID SULPHATES
Thomas Trefor Howarth, Ewhurst, England, assignor to Beecham Group Limited, Great Britain
Filed Apr. 9, 1976, Ser. No. 675,273
Claims priority, application United Kingdom, Apr. 15, 1975, 15336/75
Int. Cl.² A61K *31/42;* **C07D** *498/04*
U.S. Cl. 260—307 FA **2 Claims**

1. A compound of the formula (V):

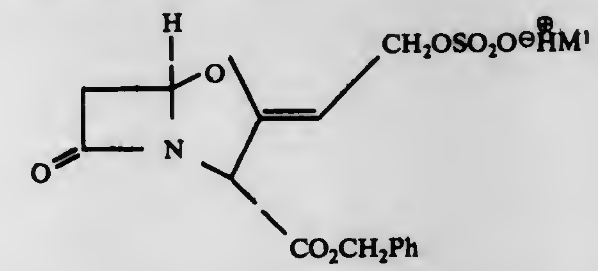

wherein M^1 is trimethylamine, dimethylalanine, pyridine, N-methyl-pyridine or N-methylmorpholino.

4,061,650
5-TRIHALOGENOMETHYL-4,5-DIHYRO-OXAZOLE-4-CARBOXYLIC ACID ESTERS
Munetsugu Miyoshi, Nishinomiya; Kazuo Matsumoto, Kawanishi; Yuji Urabe, and Tameo Iwasaki, both of Itami, all of Japan, assignors to Tanabe Seiyaku Co., Ltd., Osaka, Japan
Filed Nov. 26, 1975, Ser. No. 635,361
Claims priority, application Japan, Dec. 26, 1974, 49-619
Int. Cl.² C07D *263/14*
U.S. Cl. 260—307 F **1 Claim**

1. Trans-4-alkoxycarbonyl (or aralkyloxycarbonyl)-5-trihalogenomethyl-2-oxazoline of the formula:

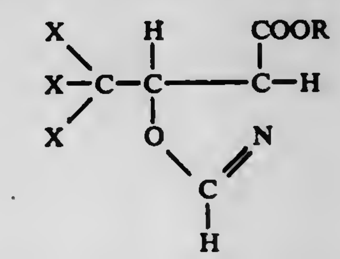

wherein R is methyl, ethyl, propyl, isopropyl, butyl, isobutyl, tert-butyl, amyl, isoamyl, or benzyl, and X chlorine or bromine.

4,061,651
PREPARATION OF 3,5-DISUBSTITUTED-4-NITROISOXAZOLES
Richard F. Love, Fishkill, and Roger G. Duranleau, Ardonia, both of N.Y., assignors to Texaco Inc., New York, N.Y.
Filed May 11, 1976, Ser. No. 685,221
Int. Cl.² C07D *261/14*
U.S. Cl. 260—307 H **13 Claims**

1. A method for the preparation of 3,5-disubstituted-4-nitroisoxazoles which comprises contacting an alpha-nitroketone corresponding to the formula:

$$R-\overset{O}{\overset{\|}{C}}-CH_2NO_2$$

where R is an alkyl group having from 1 to 20 carbon atoms or an aryl group from 6 to 20 carbon atoms in a non-aqueous environment at a temperature of from about 50° to 150° C. with a basic catalyst, wherein said catalyst is a carbonate, fluoride, oxalate or $C_{2\text{-}10}$ alkanoate of a metal of Group IA or IIA of the Periodic Table or a carbonate, fluoride, oxalate or $C_{2\text{-}10}$ alkanoate of a strongly basic ion exchange resin, or a tertiary amine.

4,061,652
URETHANES OF HYDROXYBENZOTRIAZOLES

Siegfried H. Schroeter, and Daniel R. Olson, both of Schenectady, N.Y., assignors to General Electric Company, Schenectady, N.Y.

Filed Oct. 28, 1975, Ser. No. 626,490
Int. Cl.² C07D *249/20*
U.S. Cl. 260—308 B **3 Claims**

1. Organic urethanes of the formula,

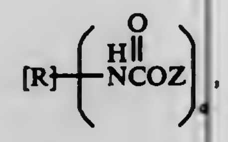

where R is a member selected from the group consisting of a $C_{(1-12)}$ aliphatic hydrocarbon radical, a $C_{(6-13)}$ aromatic hydrocarbon radical, and halogenated derivatives thereof, "*a*" is an integer equal to 1 or 2, and when *a* is 1, R is monovalent, and when *a* is 2, R is divalent, Z is an aromatic organic radical having the formula,

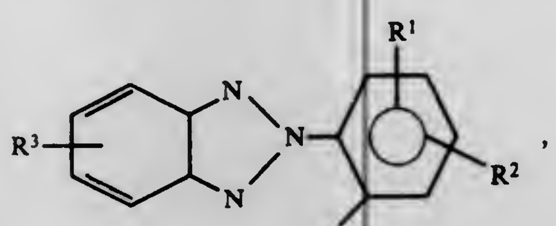

where R¹, R², and R³ can be the same of different monovalent radicals selected from the group consisting of $C_{(1-12)}$ alkyl radicals, $C_{(1-4)}$ alkoxy radicals, halogen and hydrogen.

4,061,653
1-SUBSTITUTED-3-AMINO-PYRAZOL-5-ONES

Harald Horstmann; Karl Meng, both of Wuppertal, and Egbert Wehinger, Neviges, all of Germany, assignors to Bayer Aktiengesellschaft, Germany

Division of Ser. No. 521,906, Nov. 7, 1974, which is a continuation of Ser. No. 371,959, June 21, 1973, abandoned. This application Dec. 4, 1975, Ser. No. 637,861
Claims priority, application Germany, June 23, 1972, 2230792; June 23, 1972, 2230675
Int. Cl.² C07D *231/38;* A61K *31/415*
U.S. Cl. 548—360 **6 Claims**

1. A compound of the formula

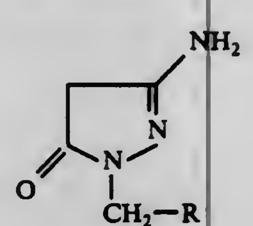

or a pharmaceutically-acceptable, nontoxic salt thereof, wherein

R is phenyl having an annellated saturated 5- or 6- membered isocyclic or heterocyclic ring wherein said heterocyclic ring has a sulphur heteroatom, a sulphur heteroatom and an oxygen heteroatom, or a sulphur heteroatom and two oxygen heteroatoms.

4,061,654
NOVEL TETRAZAPORPHINS

Elbert M. Idelson, Newton Lower Falls, Mass., assignor to Polaroid Corporation, Cambridge, Mass.

Continuation-in-part of Ser. No. 159,492, July 2, 1971, abandoned, which is a continuation of Ser. No. 740,467, June 27, 1968, abandoned. This application May 9, 1973, Ser. No. 358,637
Int. Cl.² C07D *209/00*
U.S. Cl. 260—314.5 **14 Claims**

1. A phthalocyanine compound of the formula:

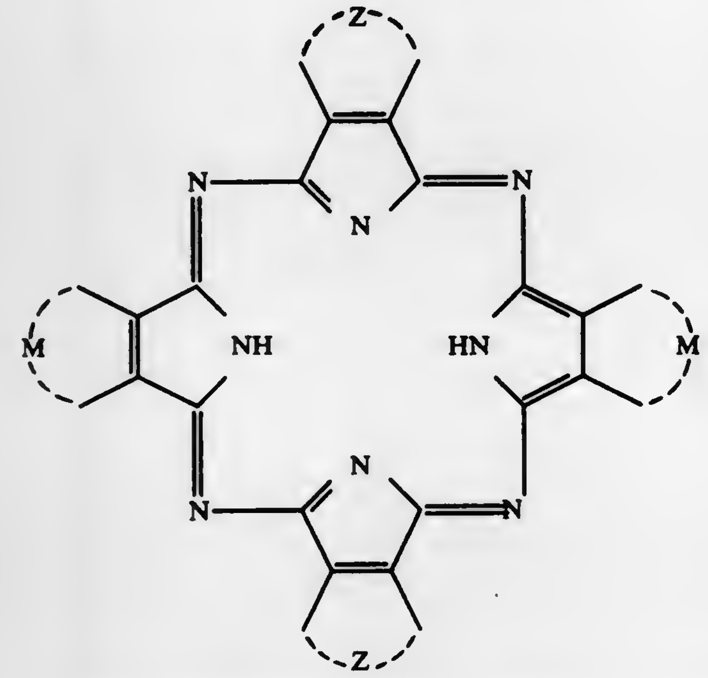

wherein M and Z comprise the atoms necessary to complete carbocyclic rings attached directly to the pyrrolenine ring and wherein M and Z are different ring structures, both being selected from the group consisting of

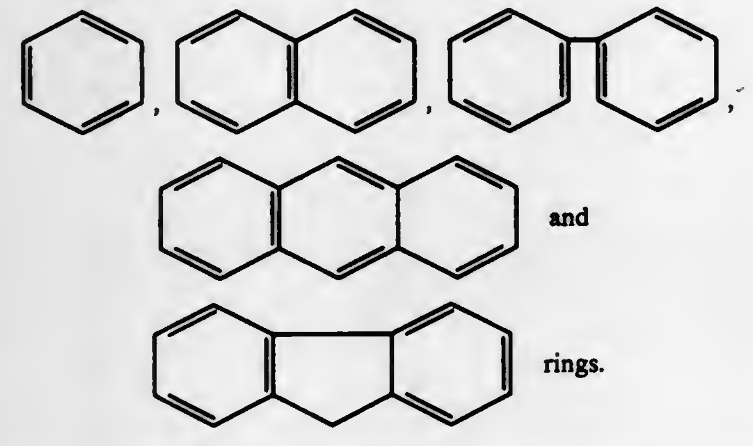

and

rings.

4. A process which comprises reacting a compound of formula:

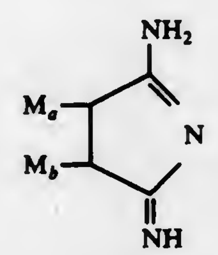

with a compound of the formula:

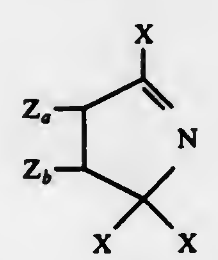

in the presence of an acid acceptor and a hydroquinone compound which can donate hydrogen atoms and wherein M_a, M_b, Z_a, and Z_b comprise a hydrogen atom, an aliphatic moiety selected from the group consisting of alkyl, alkenyl and alkynl groups having no more than 6 carbon atoms inclusive, wherein M_a is the same as M_b and Z_a is the same as Z_b, and M_a taken together with M_b and Z_a taken together with Z_b can also comprise the atoms necessary to complete carbocyclic or heterocyclic ring structures attached directly to the pyrrolenine ring which ring structures are selected from the group consisting of unsubstituted, lower alkylsubstituted, lower alkoxysubstituted, and halosubstituted rings, and each X is a halogen atom.

4,061,655
3,6-DICARBOXIMIDAMIDECARBAZOLES

Peter W. Sprague, Titusville, N.J., assignor to E. R. Squibb & Sons, Inc., Princeton, N.J.

Filed Dec. 30, 1976, Ser. No. 755,712
Int. Cl.² C07D *209/88*
U.S. Cl. 260—315 **10 Claims**

1. A compound having the formula

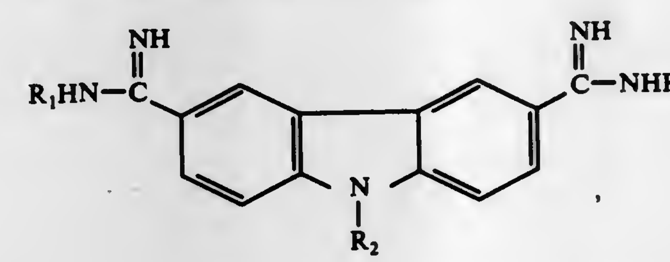

or a pharmaceutically acceptable salt thereof, wherein R_1 is phenyl or phenyl substituted with one or two methoxy, halogen or trifluoromethyl groups and R_2 is alkyl or arylalkyl; wherein alkyl is alkyl of 1 to 4 carbon atoms and aryl is phenyl or phenyl substituted with one or two alkyl, alkoxy of 1 to 4 carbon atoms, halogen or trifluoromethyl groups.

4,061,656
POLYENE COMPOUNDS

Michael Josef Klaus, Weil am Rhine, Germany, and Beverly Ann Pawson, Montclair, N.J., assignors to Hoffmann-La Roche Inc., Nutley, N.J.

Continuation-in-part of Ser. No. 632,029, Nov. 14, 1975, abandoned. This application Oct. 18, 1976, Ser. No. 733,507
Int. Cl.² C07D *333/24;* A01N *9/00*
U.S. Cl. 260—332.2 A **12 Claims**

1. A compound represented by the formula

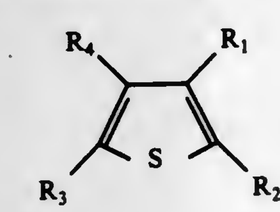

wherein one of R_1 or R_2 is

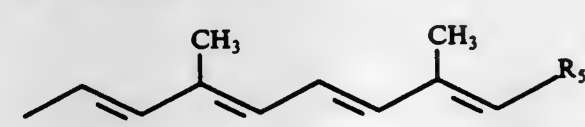

and the other of R_1 or R_2 and R_3 and R_4 are hydrogen, lower alkyl, nitro, and R_5 is carboxyl, alkoxycarbonyl, alkenoxycarbonyl, and alkynoxycarbonyl.

4,061,657
PROCESS FOR PREPARING A 2(R) OR 2(S) TRICYCLIC LACTONE GLYCOL

Verlan H. Van Rheenen, Portage, Mich., assignor to The Upjohn Company, Kalamazoo, Mich.

Continuation of Ser. No. 575,526, May 8, 1975, abandoned, which is a division of Ser. No. 374,348, June 28, 1973, abandoned. This application Sept. 23, 1976, Ser. No. 725,866
Int. Cl.² C07D *307/93*
U.S. Cl. 260—343.3 P **6 Claims**

1. A process for preparing an optically active 2S tricyclic lactone glycol of the formula

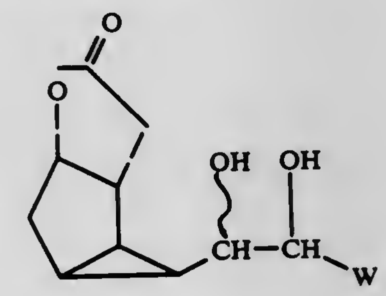

or a racemic compound of that formula and the mirror image of that formula, wherein W is 1-pentyl, cis 1-pent-2-enyl, or 1-pent-2-ynyl, and ~ indicates attachment of the hydroxyl to the side chain in alpha or beta configuration, which comprises starting with an optically active 2R tricyclic lactone glycol of the formula

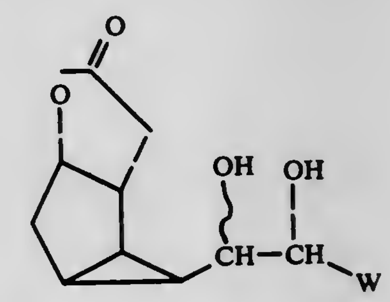

or a racemic compound of that formula and the mirror image of that formula, wherein W and ~ are as defined above, and subjecting said 2R glycol successively to the following reactions:

a. monosulfonation to replace the hydrogen of the C-2 hydroxyl with a sulfonyl group of the formula $—SO_2—R_3$ wherein R_3 is alkyl of one to 10 carbon atoms, inclusive, aralkyl of 7 to 12 carbon atoms, inclusive, phenyl or phenyl substituted with one or 2 halo or alkyl groups of one to 4 carbon atoms, inclusive;
b. acylation to replace the hydrogen of the C-1 hydroxyl with an acyl group of the formula $—C(O)—R_4$ wherein R_4 is alkyl of one to 10 carbon atoms, inclusive, aralkyl of 7 to 12 carbon atoms, inclusive, phenyl or phenyl substituted with one or 2 halo or alkyl groups of one to 4 carbon atoms, inclusive;
c. transformation of the product of step *b* to an optically active 2 S compound of the formula

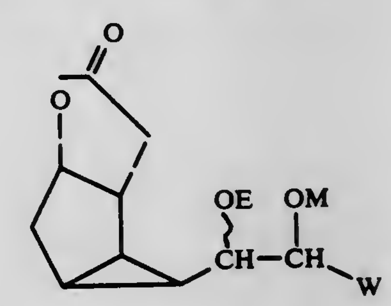

or a racemic compound of that formula and the mirror image of that formula, wherein one of E and M is hydrogen and the other is an acyl group of the formula $—C(O)R_4$ wherein R_4 is as defined above, wherein ~ indicates attachment of the moi-

ety to the side chain in either alpha or beta configuration, and wherein W is as defined above; and

d. replacement of the acyl group —C(O)R_4 with hydrogen.

4,061,658
2,5-DIPICRYLFURANS

Joseph C. Dacons, Washington, D.C., and Michael E. Sitzmann, Adelphi, Md., assignors to The United States of America as represented by the Secretary of the Navy, Washington, D.C.
Filed Mar. 23, 1977, Ser. No. 780,630
Int. Cl.² C07D *307/40, 307/70*

U.S. Cl. 260—346.11 4 Claims

1. A compound selected from the group consisting of 2,5-dipicrylfuran, 2,5-dipicryl-3-nitrofuran, and 2,5-dipicryl-3,4-dinitrofuran.

4,061,659
PROCESS FOR THE PRODUCTION OF ETHYLENE OXIDE

Robert P. Nielsen, and Peter A. Kilty, both of Houston, Tex., assignors to Shell Oil Company, Houston, Tex.
Filed June 28, 1976, Ser. No. 700,642
Int. Cl.² C07D *301/10*

U.S. Cl. 260—348.34 9 Claims

1. In a process for the production of ethylene oxide by catalytic oxidation of ethylene wherein ethylene and an oxygen-containing gas are passed through a reaction zone containing a fixed catalyst bed comprising a supported silver catalyst, at ethylene oxide forming conditions and the reaction product formed thereby is passed through a cooling zone adjacent to the reaction zone, said cooling zone being filled with an inert refractory particulate material; the improvement which comprises, employing an inert refractory particulate material having a surface area of 0.1 m^2/g or less in the cooling zone.

4,061,660
PROCESS FOR SYNTHESIS OF COENZYME Q COMPOUNDS

Shizumasa Kijima; Isao Yamatsu, both of Tokyo; Norio Minami, Kawasaki, and Yuichi Inai, Tokyo, all of Japan, assignors to Eisai Co., Ltd., Tokyo, Japan
Filed Sept. 22, 1976, Ser. No. 725,510
Claims priority, application Japan, Sept. 29, 1975, 50-116400
Int. Cl.² C07C *49/73;* C07F *5/04*

U.S. Cl. 260—396 R 7 Claims

1. A process for synthesizing 2,3-dimethoxy-5-methyl-6-substituted-1,4-benzoquinone having the formula

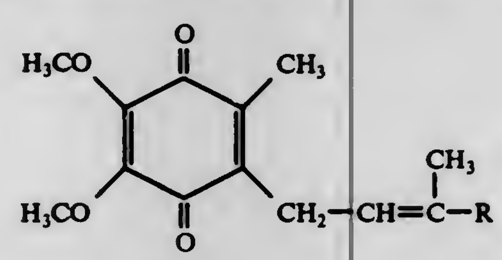

wherein R is

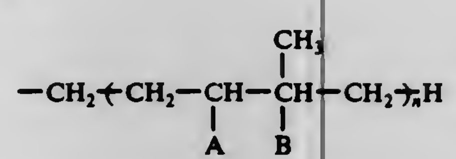

in which *n* is an integer from zero to 9, and A and B are hydrogens or A—B is a direct valence bond between the carbon atoms to which they are attached,

which comprises

1. reacting 2-methyl-4,5,6-trimethoxyphenol with a compound selected from the group consisting of phenylboric acid, diphenylboric acid, tolylboric acid, methylboric acid, dimethylboric acid, ethylboric acid, propylboric acid, and anhydrides thereof to form the corresponding borate,
2. reacting the borate obtained in step (1) with a prenol compound having the formula

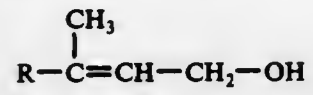

or an iso-prenol compound having the formula

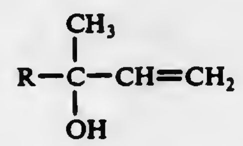

wherein R has the same meaning as defined above, or a corresponding halide derivative thereof, in the presence of a silica-alumina compound, to obtain the 2-methyl-3-substituted-4,5,6-trimethoxyphenyl borate
3. hydrolyzing the borate obtained in step (2) to obtain a compound having the formula

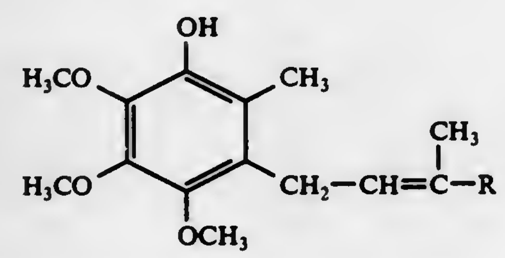

wherein R has the same meaning as defined above and then reacting the latter compound with a mild oxidizing agent to obtain a compound of the first-named formula.

4,061,661
$\Delta^{9(11)}$-5α-20-KETO STEROIDS AND PROCESS FOR THEIR PRODUCTION

Ulrich Kerb; Rudolf Wiechert, and Otto Engelfried, all of Berlin, Germany, assignors to Schering Aktiengesellschaft, Berlin and Bergkamen, Germany
Filed June 8, 1976, Ser. No. 693,848
Claims priority, application Germany, June 11, 1975, 2526373
Int. Cl.² C07J *1/00*

U.S. Cl. 260—397.45 13 Claims

1. A process for the production of a 3α-acyloxy-9α-chloro-5α-20-ketopregnane of the formula

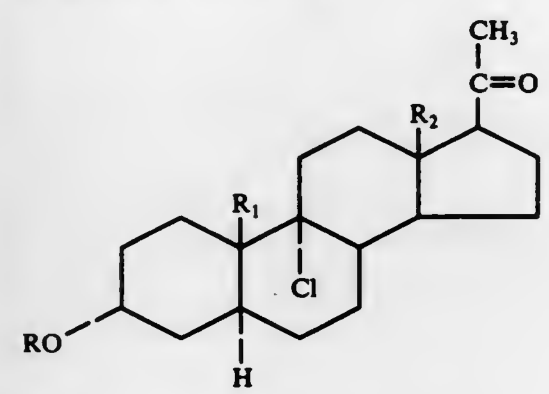

wherein R is the acyl radical of a carboxylic acid of up to 16 carbon atoms, R_1 is hydrogen or methyl and R_2 is methyl or ethyl, which comprises chlorinating a compound of the formula

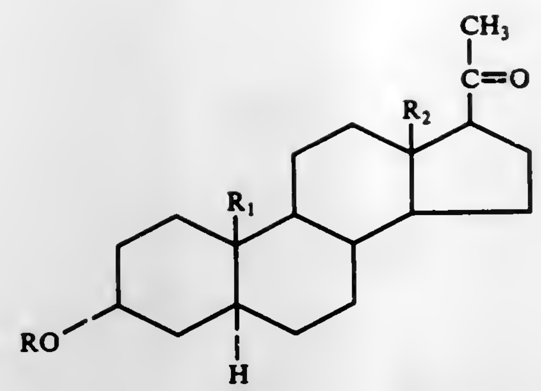

wherein R, R_1 and R_2 have the values given above, with iodobenzene dichloride under irradiation.

5. A compound of formula

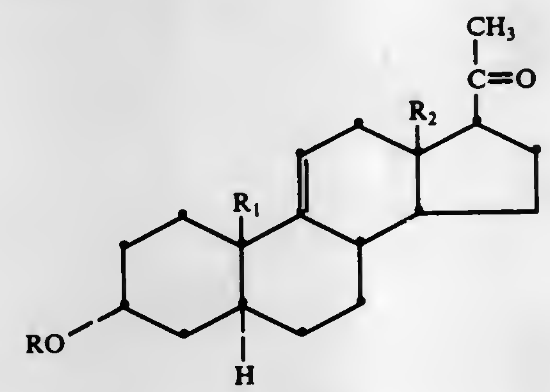

wherein *n* is 1 or 2, R is m-iodobenzoyl, R_1 is hydrogen or methyl and R_2 is methyl or ethyl.

4,061,662
REMOVAL OF UNREACTED TOLYLENE DIISOCYANATE FROM URETHANE PREPOLYMERS

Nelson Samuel Marans, and Alfred Glueckmann, both of Silver Spring, Md., assignors to W. R. Grace & Co., New York, N.Y.
Continuation of Ser. No. 608,498, Aug. 28, 1975, abandoned. This application June 14, 1976, Ser. No. 695,344
Int. Cl.² C07C *119/042, 125/04*

U.S. Cl. 560—26 16 Claims

1. A method of reducing the residual unreacted tolylene diisocyanate content in the prepolymer reaction product of toluene diisocyanate with a polyoxyalkylene polyol comprising allowing said prepolymer to flow through a column packed with absorbent type X zeolite molecular sieves.

4,061,663
PROCESS FOR PREPARATION OF ALIPHATIC PRIMARY SULFAMATES

Allen Frederick Hirsch, Somerville, N.J., assignor to Ortho Pharmaceutical Corporation, Raritan, N.J.
Filed Oct. 2, 1975, Ser. No. 618,998
Int. Cl.² C07C *143/68*

U.S. Cl. 260—456 A 9 Claims

1. The process for the preparation of a compound of the formula:

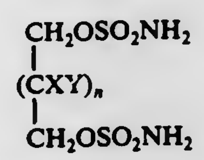

which comprises reacting an alkanediol of the formula:

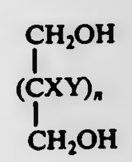

with a substituted sulfamoyl halide of the formula:

$RNHSO_2M$

in the presence of a base and treating the resulting intermediate compound with a strong acid, wherein *n* is an integer from 0–8 and X and Y are hydrogen, provided that when *n* is 1, X and Y are hydrogen, lower alkyl having 1–3 carbon atoms, phenyl and benzyl and phenethyl, R is a protecting group capable of being removed by strong acid at a temperature between room temperature and 60° C, wherein the strong acid is selected from trichloroacetic acid, trifluoroacetic acid, methanesulfonic acid, sulfuric acid, and hydrochloric acid and the protecting group is selected from the group consisting of t-butyl, benzyl, α-alkyl benzyl wherein the alkyl group has 1–3 carbon atoms, allyl and 1-alkyl-allyl wherein the alkyl group has 1–3 carbon atoms, and M is a halogen.

4,061,664
PREPARATION OF PHENOXYBENZYL ESTERS

Derek A. Wood, Sittingbourne, England, assignor to Shell Oil Company, Houston, Tex.
Filed Nov. 1, 1976, Ser. No. 737,312
Claims priority, application United Kingdom, Nov. 12, 1975, 46700/75
Int. Cl.² C07C *67/10, 69/74, 69/76, 121/66*

U.S. Cl. 260—465 D 5 Claims

1. A process for the preparation of a phenoxybenzyl ester of the formula

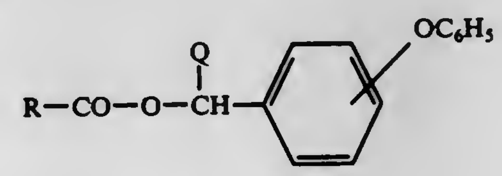

wherein Q is a hydrogen atom or a cyano group and R is

a. a cyclopropyl group of the formula

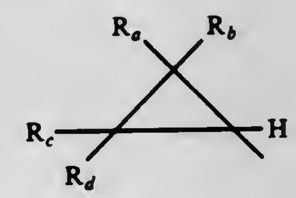

in which R_a and R_b each is an alkyl group containing from 1 to 6 carbon atoms, or a halogen atom of atomic number from 9 to 35, inclusive, or R_a is a hydrogen atom and R_b is an alkenyl group containing from 2 to 6 carbon atoms optionally substituted by from 1 to b 3 chlorine or bromine atoms, R_c R_d each is an alkyl group containing from 1 to 6 carbon atoms, or R_c is hydrogen and R_d is R_b, or R_a and R_b together or R_c and R_d together is an alkylene group containing from 2 to 6 carbon atoms; or

b. a benzyl group of the formula

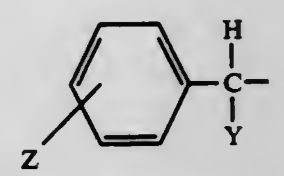

in which Z is a halogen atom of atomic number 9 to 35, inclusive, or an alkoxy group containing from 1 to 4 carbon atoms and Y is an alkyl group containing from 1 to 6 carbon atoms, which process comprises neutralizing an acid of the formula R-COOH in which R is defined above with a water-soluble base, and then contacting the resulting product with a solution in a water-immiscible organic solvent of a benzyl halide of the formula

in which X is a halogen atom; and Q is defined above in the presence of a macrocyclic polyether phase-transfer catalyst.

4,061,665
5,6-DIDEHYDRO-ω-PHENOXY-PGE$_{2\alpha}$ANALOGS
Chiu-Hong Lin, Portage, Mich., assignor to The Upjohn Company, Kalamazoo, Mich.
Division of Ser. No. 619,077, Oct. 2, 1975, Pat. No. 4,013,695. This application Nov. 4, 1976, Ser. No. 738,717
Int. Cl.^{2} C07C 65/22
U.S. Cl. 260—410.9 R **24 Claims**

1. A prostaglandin analog of the formula

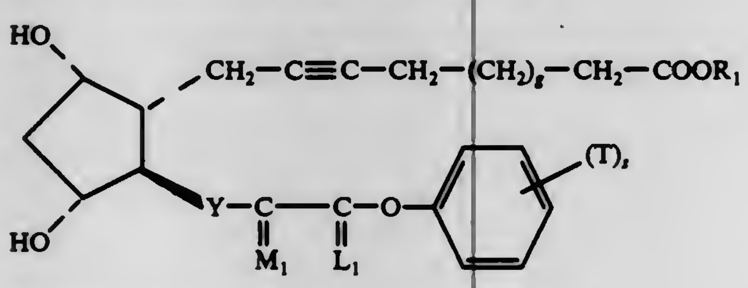

wherein g is one, 2, or 3;
wherein Y is trans—CH=CH—;
wherein M_1 is

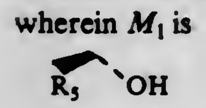

or

wherein R_5 is hydrogen or methyl;
wherein T is chloro, fluoro, trifluoromethyl, alkyl of one to 3 carbon atoms, inclusive, or alkoxy of one to 3 carbon atoms, inclusive, and s is zero, one, 2, or 3, the various T's being the same or different, with the proviso that not more than two T's are other than alkyl;
wherein L_1 is

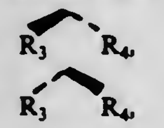

or a mixture of

and

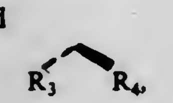

wherein R_3 and R_4 are hydrogen or methyl being the same or different; and
wherein R_1 is hydrogen, alkyl of one to 12 carbon atoms, inclusive, cycloalkyl of 3 to 10 carbon atoms, inclusive, aralkyl of 7 to 12 carbon atoms, inclusive, phenyl, phenyl substituted with one, two or three chloro or alkyl of one to 3 carbon atoms, inclusive, or a pharmacologically acceptable cation.

4,061,666
5,6-DIDEHYDRO-ω-ARYL-11-DEOXY-PGE$_2$ ANALOGS
Chiu-Hong Lin, Portage, Mich., assignor to The Upjohn Company, Kalamazoo, Mich.
Division of Ser. No. 619,077, Oct. 2, 1975, Pat. No. 4,013,695. This application Nov. 4, 1976, Ser. No. 738,718
Int. Cl.^{2} C07C 65/22
U.S. Cl. 560—53 **32 Claims**

1. A prostaglandin analog of the formula

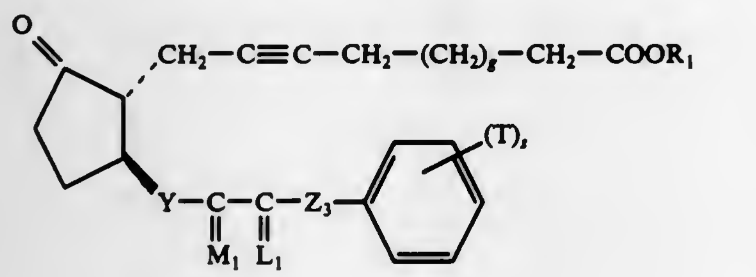

wherein g is one, 2, or 3;
wherein Y is trans—CH=CH—;
wherein M_1 is

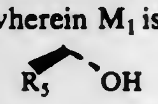

or

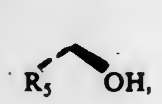

wherein R_5 is hydrogen or methyl;
wherein Z_3 is oxa or methylene, with the proviso that Z_3 is oxa only when R_3 and R_4 are hydrogen or methyl;
wherein T is chloro, fluoro, trifluoromethyl, alkyl of one to 3 carbon atoms, inclusive, or alkoxy of one to 3 carbon atoms, inclusive, and s is zero, one, 2, or 3, the various T's being the same or different, with the proviso that not more than two T's are other than alkyl;
wherein L_1 is

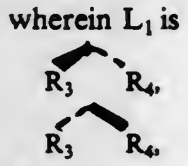

or a mixture of

and

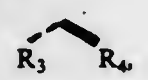

wherein R_3 and R_4 are hydrogen, methyl, or fluoro, being the same or different, with the proviso that one of R_3 and R_4 is fluoro only when the other is hydrogen or fluoro; and
wherein R_1 is hydrogen, alkyl of one to 12 carbon atons, inclusive, cycloalkyl of 3 to 10 carbon atoms, inclusive, aralkyl of 7 to 12 carbon atoms, inclusive, phenyl, phenyl substituted with one, two, or three chloro or alkyl of one to 3 carbon atoms, inclusive, or a pharamacologically acceptable cation.

4,061,667
CIS-2-METHYL-OCT-5-EN-2-YL ACETATE
Alfred A. Schleppnik, St. Louis, Mo., assignor to Monsanto Company, St. Louis, Mo.
Division of Ser. No. 432,012, Jan. 9, 1974, Pat. No. 3,966,648, which is a division of Ser. No. 211,789, Dec. 23, 1971, Pat. No. 3,859,366. This application Mar. 24, 1975, Ser. No. 561,452
Int. Cl.^{2} C07C 69/145
U.S. Cl. 560—261 **1 Claim**

1. Cis-2-methyl-oct-5-en-2-yl acetate.

4,061,668
PROCESS FOR THE PREPARATION OF 2-(4-ISOBUTYLPHENYL)-PROPIOHYDROXAMIC ACID
Giovanni Orzalesi, and Renato Selleri, both of Florence, Italy, assignors to Societa Italo-Britannica L. Manetti - H. Roberts & C., Florence, Italy
Continuation of Ser. No. 573,056, April 30, 1975, abandoned. This application Oct. 19, 1976, Ser. No. 733,942
Claims priority, application Italy, Dec. 6, 1974, 54400/74
Int. Cl.^{2} C07C 83/10
U.S. Cl. 260—500.5 H **1 Claim**

1. A process for the preparation of 2-(4isobutylphenyl)-propiohydroxamic acid comprising the steps of forming a mixture of 2-(4-isobutylphenyl)-propionitrile as a starting compound and anhydrous methanol, saturating said mixture with dry hydrochloric gas under cooling, reacting and then diluting the reaction product by ethyl ether, whereby a precipitate is formed, reacting the precipitate with a mixture of a methanol solution of hydroxylamine hydrochloride and a sodium hydroxide solution under stirring, diluting the reaction product with water and precipitating the desired compound by carbon dioxide.

4,061,669
PROCESS FOR PRODUCING AMMONIUM P-STYRENESULFONATE
Kanzi Katsuragawa; Tatsuo Hattori; Keiichi Kihara, and Hanzo Tamabayashi, all of Shin-nanyo, Japan, assignors to Toyo Soda Manufacturing Co., Ltd., Japan
Filed Aug. 28, 1975, Ser. No. 608,701
Claims priority, application Japan, Aug. 29, 1974, 49-98423
Int. Cl.^{2} C07C 143/24
U.S. Cl. 260—505 N **5 Claims**

1. A process for continuously producing ammonium p-styrenesulfonate from an alkali metal p-styrenesulfonate which comprises producing an amine salt of p-styrenesulfonic acid by contacting an aqueous solution of an alkali metal p-styrenesulfonate with a mineral acid salt of an organic amine having more than 7 carbon atoms in an organic solvent; contacting the organic solution of an amine salt of p-styrenesulfonic acid with ammonia to produce ammonium p-styrenesulfonate and to produce said organic amine; and reacting said organic amine with a mineral acid to reproduce said mineral acid salt of said organic amine and recycling said reproduced salt back to the first step.

4,061,670
15-DEOXY-16-HYDROXY-16-VINYL AND CYCLOPROPYL SUBSTITUTED PROSTANOIC ACIDS AND CONGENERS
Middleton Brawner Floyd, Jr., Suffern, N.Y.; Martin Joseph Weiss, Oradell, N.J.; Charles Vincent Grudzinskas, Garnerville, N.Y., and Sow-Mei Lai Chen, Park Ridge, N.J., assignors to American Cyanamid Company, Stamford, Conn.
Filed July 19, 1976, Ser. No. 706,343
Int. Cl.^{2} C07C 177/00
U.S. Cl. 260—514 D **13 Claims**

1. An optically active compound of the formula:

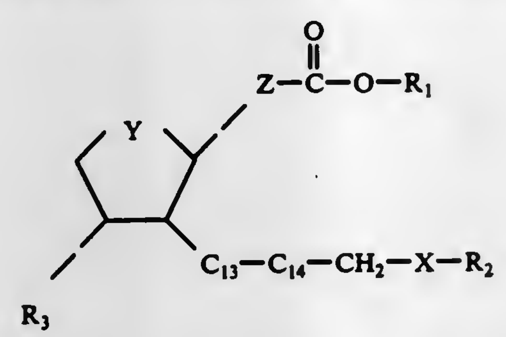

or a racemic mixture of that formula and the mirror image thereof wherein R_1 is selected from the group consisting of hydrogen and alkyl having from 1 to 12 carbon atoms; R_2 is selected from the group consisting of alkyl having from 3 to 7 carbon atoms; R_3 is hydroxy; Y is a divalent moiety of the formulae:

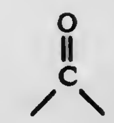

X is a divalent moiety selected from the group consisting of those of the formulae:

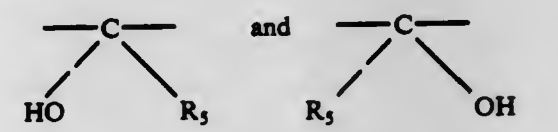

wherein R_5 is selected from the group consisting of vinyl and cyclopropyl; Z is a divalent moiety of the formulae:

$$-CH_2-CH\overset{cis}{=}CH-(CH_2)_n,$$

wherein n is an integer from 3 to 5, inclusive; the moiety -C_{13}-C_{14}-is trans-vinylene; and the pharmacologically acceptable cationic salts thereof when R_1 is hydrogen.

4,061,671
ANALOGUES OF PROSTAGLANDINS
Gerhard Beck, Frankfurt am Main; Rudolf Kunstmann, Hofheim, Taunus; Milos Babej, Frankfurt am Main, and Hermann Teufel, Kelkheim, Taunus, all of Germany, assignors to Hoechst Aktiengesellschaft, Frankfurt am Main, Germany
Filed Apr. 1, 1975, Ser. No. 563,973
Claims priority, application Germany, Apr. 3, 1974, 2416193
Int. Cl.^{2} C07C 177/00
U.S. Cl. 260—514 D **3 Claims**

1. 9-oxo-11α,15-dihydroxy-16,16-dimethyl-18-oxa-5-cis-13-trans-prostadienoic acid.

4,061,672
DERIVATIVES OF 9-HYDROXY-13-TRANS-PROSTENOIC ACID
Middleton Brawner Floyd, Jr., Suffern, N.Y.; William James McGahren, Demarest; Robert Eugene Schaub, Upper Saddle River, both of N.J., and Martin Joseph Weiss, Oradell, N.J., assignors to American Cyanamid Company, Stamford, Conn.
Division of Ser. No. 480,989, June 19, 1976, Pat. No. 3,950,406, Continuation-in-part of Ser. No. 274,769, July 24, 1972, abandoned. This application Jan. 26, 1976, Ser. No. 652,354
Int. Cl.^{2} C07G 177/00
U.S. Cl. 260—514 D **13 Claims**

1. An optically active compound of the formula:

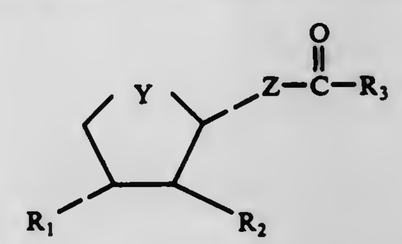

or a racemic compound of that formula wherein R_1 is selected from the group consisting of hydroxy, lower alkoxy, and ω-hydroxy substituted lower alkoxy; R_2 is a moiety selected from the group consisting of those of the formulae:

$$-CH=CH-\underset{}{\overset{CH_2P}{\overset{|}{CH}}}-R' \text{ and } -CH=CH-CH_2R''$$

wherein P is hydroxy, R' is a straight chain alkyl group having

from 2 to 10 carbon atoms or a straight chain alkyl group having from 2 to 6 carbon atoms and having one branched alkyl group of from 1 to 3 carbon atoms, R'' is a straight chain alkyl group having from 2 to 10 carbon atoms and substituted with an hydroxy, a straight chain alkyl group having from 2 to 6 carbon atoms and having one branched alkyl group of from 1 to 3 carbon atoms and substituted with an hydroxy group, a straight chain alkenyl group having from 2 to 10 carbon atoms and substituted with a hydroxy, or a straight chain alkyl group having from 2 to 6 carbon atoms and having one branched alkyl group of from 1 to 3 carbon atoms and substituted with a hydroxy; with the proviso that a hydroxy group may not be on a tertiary carbon when R'' is alkyl or alkenyl; R_3 is selected from the group consisting of hydroxy and an alkoxy group having from 1 to 12 carbon atoms; Y is a divalent radical selected from the group consisting of those of the formulae:

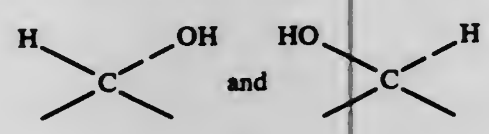

and Z is a divalent radical selected from the group consisting of those of the formulae:

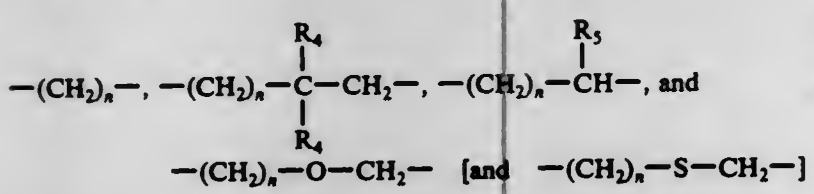

wherein n is an integer from 3 to 8 inclusive, R_4 is an alkyl group having up to 3 carbon atoms, and R_5 is an alkyl group having up to 3 carbon atoms a fluorine atom or a phenyl group; and the pharmacologically acceptable cationic salts thereof when R_3 is hydroxy.

4,061,673
MANUFACTURE OF METHACRYLIC ACID
Takeru Onoda, and Masayuki Otake, both of Yokohama, Japan, assignors to Mitsubishi Chemical Industries Ltd., Tokyo, Japan
Filed July 30, 1976, Ser. No. 710,340
Int. Cl.² C07C *51/24*
U.S. Cl. 260—526 N **6 Claims**

1. In a process for the manufacture of methacrylic acid which comprises reacting oxygen and isobutyric acid in vapor phase in the presence of a supported catalyst containing a heteropolyacid having the general formula:

$$H_{3+x}Mo_{12-x-y}W_yV_xPO_{40}$$

wherein x and y are independently 0, 1, 2 or 3 and $x + y < 5$, and/or a reduced form of said heteropolyacid, the improvement wherein the carrier for said catalyst has a SiO_2 content of at least 70% and a water absorbability of at least 60%.

4,061,674
PROCESS OF MAKING PENICILLAMINE
Friedrich Asinger, Rott; Wolf-Dieter Pfeifer; Heribert Offermanns, both of Grossauheim; Paul Scherberich, Neu Isenburg, and Gerd Schreyer, Grossauheim, all of Germany, assignors to Deutsche Gold- und Silber-Scheideanstalt vormals Roessler, Frankfurt, Germany
Continuation of Ser. No. 317,403, Dec. 21, 1972, Pat. No. 3,946,069. This application Feb. 12, 1976, Ser. No. 657,605
Claims priority, application Germany, Dec. 22, 1971, 2163810
The portion of the term of this patent subsequent to Mar. 23, 1993, has been disclaimed.
Int. Cl.² C07C *99/00*
U.S. Cl. 260—534 S **7 Claims**

1. A process for the production of a compound having the formula

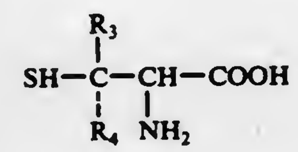

I

wherein:

R_3 and R_4 are each alkyl of 1 to 6 carbon atoms or which together form a closed ring,

which process comprises heating in two stages in the presence of at least a stoichiometric amount of water and hydrochloric acid a thiazolidine-4-carbonitrile having the formula:

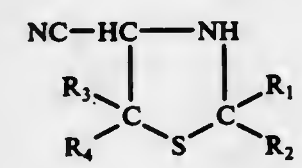

II

wherein:

R_3 and R_4 have the meaning as above, and

R_1 and R_2 are each alkyl of 1 to 6 carbon atoms

or which together form a closed ring, or are alkenyl of 2–4 carbon atoms or alkyl-substituted aryl, the alkyl substituent having a total of 1–2 carbon atoms,

the heating in the first stage being conducted at a temperature between 20° and 80° C in hydrochloric acid having a concentration of at least 30% by weight of hydrogen chloride, and the heating in the second stage being conducted at a temperature between 80° and 110° C in hydrochloric acid having a concentration of at least 10 and at most 30% by weight of hydrogen chloride and extracting the compound above I or its hydrochloride from the mixture.

4,061,675
PROCESS FOR THE SYNTHESIS OF UREA FROM CARBON DIOXIDE AND AMMONIA
Renzo Gagliardi, Terni, Italy, assignor to Snam Progetti S.p.A., Milan, Italy
Filed July 30, 1976, Ser. No. 710,323
Claims priority, application Italy, Oct. 15, 1969, 40806/69
Int. Cl.² C07C *126/02*
U.S. Cl. 260—555 A **3 Claims**

1. In a method of making urea, which comprises synthesizing ammonia by reacting a gaseous mixture containing nitrogen and hydrogen to give a gaseous ammonia synthesis product which also contains hydrogen, nitrogen, methane and argon, reacting the ammonia synthesis product with carbon dioxide to form a liquid reaction product containing ammonium carbamate, and dissociating said ammonium carbamate to form urea; the improvement comprising contacting the hot ammonia synthesis effluent with the liquid effluent from the urea synthesis reactor in order to dissociate the ammonium carbamate contained in said effluents into a gaseous effluent containing ammonia, carbon dioxide and oxygen and to produce a further liquid product containing urea, removing oxygen from said

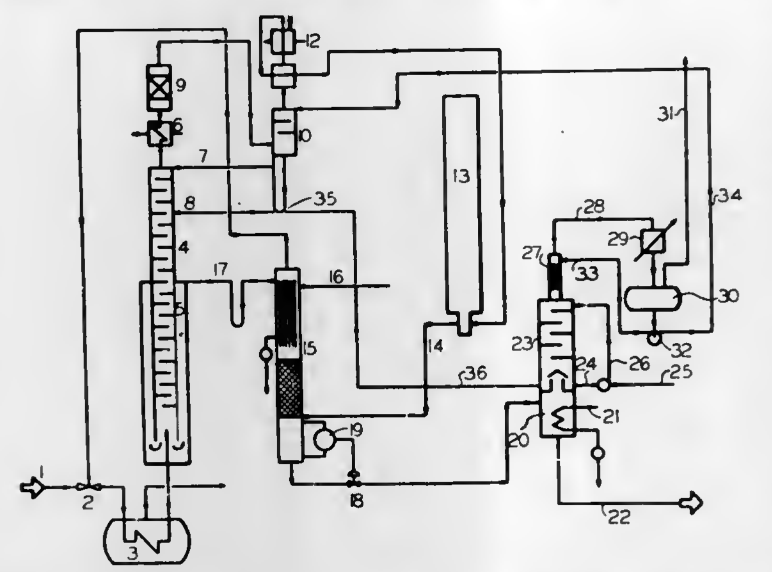

carbamate dissociation effluent, and thereafter feeding the deoxygenated effluent to the ammonia synthesis step.

4,061,676
RECOVERY OF DOXYCYCLINE AND PRODUCTS THEREOF
Ivan Villax, 1, Travessa do Ferreiro, Lisbon-3, Portugal
Continuation of Ser. No. 159,462, July 2, 1971, abandoned. This application Mar. 23, 1976, Ser. No. 669,655
Claims priority, application Portugal, July 3, 1970, 54109; Sept. 10, 1970, 54109; June 9, 1971, 54109
Int. Cl.² C07C *103/19*
U.S. Cl. 260—559 AT **7 Claims**

1. A process for the recovery of α-6-deoxy-5-hydroxytetracycline in high purity from the crude reaction mixture resulting from the conversion of an intermediate into said α-6-deoxy-5-hydroxytetracycline and having the same as well as reaction by-products, degradation products and the β-isomer as impurities, said crude reaction mixture being the initial reaction mixture in which the α-6-deoxy-5-hydroxytetracycline is present prior to the institution of any recovery procedures, which consists essentially of the steps of (1) first acidifying said crude reaction mixture with a concentrated aqueous solution of methanesulfonic acid, sulphuric acid or hydrochloric acid, (2) then heating to a temperature of 60° to 90° C until said impurities are further degraded, (3) cooling said reaction mixture and then (4) precipitating said α-6-deoxy-5-hydroxytetracycline from said reaction mixture thus treated and cooled, in the form of water insoluble acid addition salts and molecular complexes selected from the group consisting of 5-sulfosalicylate, N,N'-dibenzylethylenediamine- and N,N'-dibenzylethylenediimine molecular complexes, N,N'-dibenzylethylenediamine alkaline earth metal and, N,N'dibenzylethylenediimine alkaline earth metal molecular complexes by adding the corresponding acid or molecular complex to said treated and cooled reaction mixture, said steps (1) - (4) being carried out sequentially without any intervening steps.

4,061,677
PARTIAL DEHYDRATION OF CYCLOHEXANONE OXIME
Kurt Kahr, Hambach; Hanns Pohl, Lambsheim; Guenther Rapp, Ludwigshafen, and Peter Lauz, Annweiler, all of Germany, assignors to BASF Aktiengesellschaft, Ludwigshafen, Germany
Continuation of Ser. No. 276,814, July 31, 1972, abandoned. This application June 28, 1976, Ser. No. 700,541
Claims priority, application Germany, Aug. 4, 1971, 2138930
Int. Cl.² C07C *131/04*
U.S. Cl. 260—566 A **6 Claims**

1. A process for partial dehydration of cyclohexanone oxime by treatment with an aqueous solution of an inorganic salt wherein crude cyclohexanone oxime is extrated countercurrently at a temperature of from 65° C to the boiling temperature of the two-phase mixture in an extraction column with a concentrated solution of a salt selected from the group consisting of ammonium sulfate, hydroxylammonium sulfate, ammonium chloride, ammonium phosphate, and mixtures of ammonium sulfate and hydroxylammonium sulfate, and the salt solution is separated from the partly dehydrated cyclohexanone oxime, concentrated again by evaporation and returned for dehydration of the oxime.

4,061,678
PROCESS FOR THE PREPARATION OF AROMATIC POLYAMINES
Hartmut Knöfel, Leverkusen, and Günther Ellendt, Krefeld, both of Germany, assignors to Bayer Aktiengesellschaft, Leverkusen, Germany
Filed Dec. 29, 1975, Ser. No. 645,042
Claims priority, application Germany, Jan. 9, 1975, 2500573
Int. Cl.² C07C *85/24*
U.S. Cl. 260—570 D **6 Claims**

1. A process for the preparation of multi-nuclear aromatic polyamines comprising:

a. condensing an aromatic amine with formaldehyde in the presence of a hydrophobic solvent and in the absence of an acid catalyst to produce a pre-condensate mixture containing the corresponding N,N'-disubstituted aminals,
b. removing substantially all the water from said pre-condensate mixture to produce a first organic phase,
c. extracting said first organic phase with an aqueous solution containing an acid catalyst thereby producing a second organic phase and an aqueous pre-condensate phase which contains said aminals,
d. subjecting said aqueous pre-condensate phase to a rearrangement reaction thereby producing an aqueous condensation mixture containing said aromatic polyamines:
e. extracting said aqueous condensation mixture with a hydrophobic solvent to provide a solvent phase and an aqueous phase which comprises an aqueous solution containing the acid catalyst as an amine salt of said aromatic amine, and of said aromatic polyamines,
f. recovering aromatic polyamines from said solvent phase, and
g. returning said aqueous phase to step (c).

4,061,679
STEREOSPECIFIC TOTAL STEROIDAL SYNTHESIS VIA SUBSTITUTED C/D-TRANS INDANONES
Zoltan George Hajos, Upper Montclair, N.J., assignor to Hoffmann-La Roche Inc., Nutley, N.J.
Division of Ser. No. 482,711, June 24, 1974, Pat. No. 3,984,474, which is a division of Ser. No. 765,023, Oct. 4, 1968, Pat. No. 3,897,460. This application July 14, 1976, Ser. No. 705,306
The portion of the term of this patent subsequent to Oct. 5, 1993, has been disclaimed.
Int. Cl.² C07C *49/54*
U.S. Cl. 260—586 F **1 Claim**

1. A process for the preparation of a compound of the formula

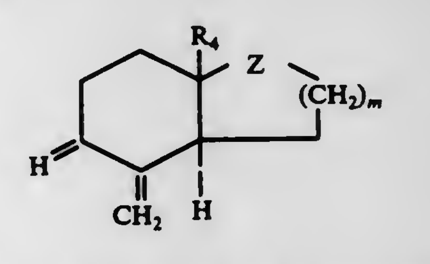

wherein R_4 is hydrogen or lower alkyl; Z is carbonyl; m is an integer having the value of 1 or 2,

which comprises dissolving a compound of the formula

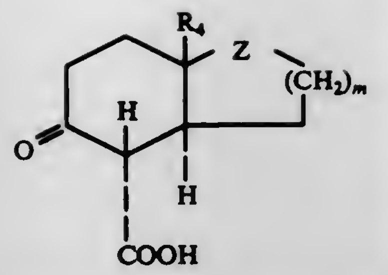

wherein R_4, Z and *m* are as defined above in dimethylsulfoxide and then adding to the reaction mixture formaldehyde in the presence of a compound selected from the group consisting of methylamine, butylamine, benzylamine and heterocyclic secondary amines and salts thereof derived from strong mineral acids or organic acids at a temperature from about 15° to about 40° C.

4,061,680
METHOD OF PRODUCING HIGH-BOILING BYPRODUCTS OF ISOPRENE PRODUCTION
Evgeny Vasilievich Bart, prospekt Morisa Toreza, 18, kv. 69; Oleg Efimovich Batalin, ulitsa Ordzhonikidze, 45, korpus 1, kv. 85, both of Leningrad; Andrian Petrovich Troitsky, ulitsa Miklukho-Maklaya, 65, korpus 2, kv. 48; Nina Andreevna Skachkova, Scherbakovskaya ulitsa, 7, kv. 31, both of Moscow; Vladimir Mikhailovich Lebedev, Jubileiny prospekt, 30, kv. 98, Khimiki Moskovskoi oblasti, and Rimma Petrovna Trifonova, Scherbakovskaya ulitsa, 9, kv. 102, Moscow, all of U.S.S.R.
Filed Apr. 1, 1975, Ser. No. 563,951
Int. Cl.² C07C *47/04, 11/08, 11/18*
U.S. Cl. 260—606 **1 Claim**

1. A method of processing high-boiling byproducts obtained at the first stage of isoprene production by the dioxane method into isoprene, isobutylene and formaldehyde comprising catalytically splitting said byproducts in the vapour phase in the presence of water with a weight ratio therebetween of 1:1+2, respectively, at 250°-290° C over aluminium oxide as catalyst to obtain a vapour mixture; catalytically splitting said vapour mixture over calcium-phosphate catalyst at 315°-360° C. to obtain a reaction mixture containing isoprene, isobutylene and formaldehyde.

4,061,681
METHOD FOR THE PREPARATION OF MONO- OR POLY [DIALKYL OR DICYCLOALKYLPHOSPHONYLMETHYL] AROMATIC CARBOCYCLIC COMPOUNDS
Ray Leonard Hillard, and Norma Ann Weston, both of R.D. Annandale, N.J., assignors to American Cyanamid Company, Stamford, Conn.
Filed Oct. 12, 1976, Ser. No. 731,288
Int. Cl.² C07F *9/53*
U.S. Cl. 260—606.5 P **12 Claims**

1. A method for the preparation of a phosphine oxide represented by the formula:

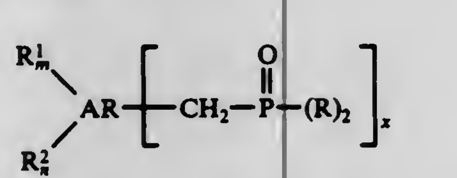

wherein R represents an alkyl radical containing from 1 to 8 carbon atoms or a cycloalkyl radical containing 5 or 6 carbon atoms in a ring, said ring optionally being further substituted with one or more lower alkyl (C_1 to C_4) groups; R^1 and R^2 are, individually, methyl, ethyl, or methoxy radicals; AR is benzene or naphthalene; and when AR is benzene, *m* and *n* are, individually, integers from 0 to 5, inclusive, and *x* is an integer from 1 to 6, inclusive; when AR is naphthalene, *m* and *n* are, individually, integers from 0 to 3, inclusive, and *x* is an integer from 1 to 4, inclusive, which comprises:

1. reacting a secondary phosphine compound of the formula:

$(R)_2PH$

with at least a stoichiometric amount of formaldehyde to produce a dialkylhydroxymethylphosphine of the formula:

$(R)_2P-CH_2OH$

2. reacting at least the stoichiometrically required amount of said dialkylhydroxymethylphosphine with a halomethyl aromatic compound of the formula:

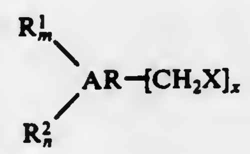

wherein X is a halogen atom, to produce a tertiary phosphine of the formula:

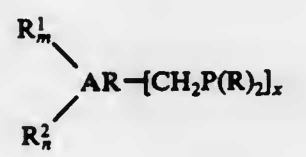

and
3. oxidizing said tertiary phosphine compound.

4,061,682
PREPARATION OF SYMMETRICAL ETHERS
Robert A. Dubois, Framingham, and Harold H. Freedman, Newton Center, both of Mass., assignors to The Dow Chemical Company, Midland, Mich.
Filed July 23, 1975, Ser. No. 598,529
Int. Cl.² C07C *41/00*
U.S. Cl. 260—611 A **12 Claims**

1. A process for preparing symmetrical ethers comprising reacting by contacting a primary or secondary alkyl or inertly-substituted alkyl halide, sulfate, or sulfonate, with an alkali metal hydroxide or alkaline earth metal hydroxide in the presence of both a catalytic amount of a quaternary ammonium salt or a quaternary phosphonium salt of the formula

$R_1R_2R_3R_4Q^+A^-$

wherein Q is a quaternized atom of nitrogen or phosphorus, A is a neutralizing anion, and R_1-R_4 are hydrocarbyl groups of from 1 to about 16 carbon atoms each with a combined minimum total of at least about 10 carbon atoms and a catalytic amount of a carboxylate salt or thiocarboxylate salt comprised of an alkyl, aryl, arylalkyl, cycloalkyl or inertly-substituted derivatives thereof, carboxylate or thiocarboxylate anion and an alkali metal or alkaline earth metal cation.

4,061,683
DIPHENYL ETHER DERIVATIVES
Friedrich Karrer, Basel, Switzerland, assignor to Ciba-Geigy Corporation, Ardsley, N.Y.
Continuation-in-part of Ser. No. 328,218, Jan. 31, 1973, abandoned. This application Sept. 9, 1975, Ser. No. 611,731
Int. Cl.² C07C *43/22*
U.S. Cl. 260—613 R **9 Claims**

1. 1-Phenoxy-4-(3-methyl-3-methoxy-pentyl-1-oxy)-benzene.

9. 1-Phenoxy-4-(4-pentinyl-1-oxy)-benzene.

4,061,684
HIGHLY BRANCHED POLYETHER POLYOLS OF HIGH MOLECULAR WEIGHT
Herbert Helfert, Frankenthal, Germany; William Keith Langdon, Grosse Ile, and Pauls Davis, Gibraltar, both of Mich., assignors to BASF Wyandotte Corporation, Wyandotte, Mich.
Filed Oct. 29, 1976, Ser. No. 736,939
Int. Cl.² C07C *43/00;* C10M *7/16*
U.S. Cl. 260—615 B **5 Claims**

1. A composition of matter comprising a mixture of compounds of the structural formula

$X-(Y-X)_p-Y-X$

where X is the residue of a polyglycerol polyol with an M group removed, said polyglycerol polyol being a mixture of compounds of the formula

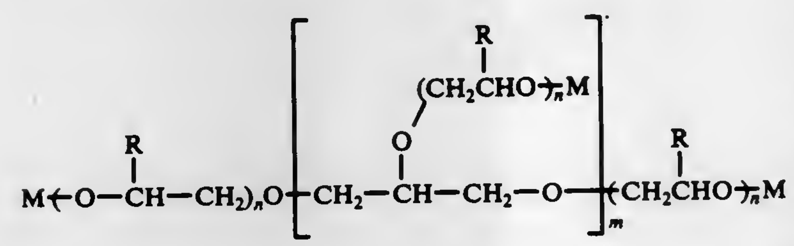

where
R is hydrogen or a methyl group and in which at least 75% of the R groups are hydrogen, M is hydrogen or an alkali metal, *m* is an integer having an average value greater than 5, and *n* is an integer having an average value high enough to provide a compound mixture having more than 95% alkylene oxide moieties,
Y is the residue of a diol containing 2 to 6 carbon atoms with two —OH groups removed therefrom, and
p is an integer of 0 to 10 such that the molecular weight of the molecule exceeds 12,000, but not 50,000.

2. A method of producing a composition of matter comprising a mixture of compounds of the structural formula

$X-(Y-X)_p-Y-X$

where X is the residue of a polyglycerol polyol with an M group removed, said polyglycerol polyol being a mixture of compounds of the structural formula

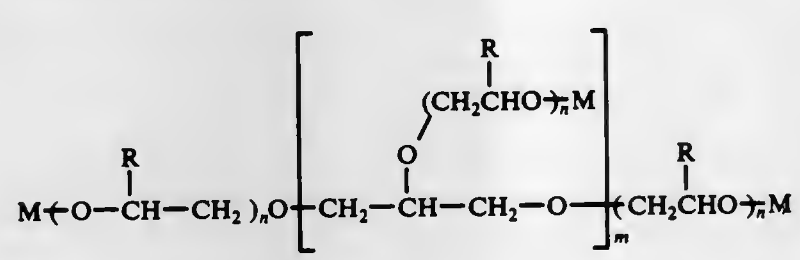

where
R is hydrogen or a methyl group and in which at least 75% of the R groups are hydrogen, M is hydrogen or an alkali metal, *m* is an integer having an average value greater that 5, and *n* is an integer having an average value high enough to provide a compound mixture having more than 95% alkylene oxide moieties,
Y is the residue of a diol containing 2 to 6 carbon atoms with two —OH groups removed therefrom, and
p is an integer of 0 to 10 such that the molecular weight of the molecule exceeds 12,000, but not 50,000, said method comprising the steps of forming as a first solution an anhydrous, alkali-catalyzed solution of a starting material comprising a mixture of compounds having the structural formula defined above in an inert organic solvent,
forming a second anhydrous solution comprising a difunctional coupling agent selected from the group consisting of the benzenesulfonic and toluene acid diesters of diols containing 2 to 6 carbon atoms in an inert organic solvent, and
reacting said second solution with said first solution at a temperature from 20° to 250° C to obtain a coupled product having a molecular weight of over 12,000, but less than 50,000.

4,061,685
CATALYTIC SYNTHESIS OF PHENOLS
Frank Julian Weigert, Wilmington, Del., assignor to E. I. Du Pont de Nemours and Company, Wilmington, Del.
Continuation-in-part of Ser. No. 547,959, Feb. 7, 1975, abandoned. This application May 5, 1976, Ser. No. 683,394
Int. Cl.² C07C *39/04*
U.S. Cl. 260—621 G **14 Claims**

1. A process which consists essentially in reacting a cyclic or an open-chain alkane or alkene of 6 to 10 carbon atoms having a continuous chain of at least six successive carbon atoms, each of which is bonded directly to no more than three carbon atoms, with water in a nonoxidative atmosphere at a temperature of 350° to 700° C and at a contact time of about 0.01 second to about 10 minutes, in the presence of a metal oxide catalyst selected from oxides of Al, Bi, Cd, Ce, Cr, Cu, Fe, In, Mn, Mo, Sn, Te, Th, Ti, U, V, W, Zn and Zr to produce a phenol.

4,061,686
CYCLOHEXANE DIOL COMPOSITION
John B. Hall, Rumson, and Wilhelmus Johannen Weigers, Red Bank, both of N.J., assignors to International Flavors & Fragrances Inc., New York, N.Y.
Continuation-in-part of Ser. No. 662,818, March 1, 1976, Pat. No. 4,014,944. This application Dec. 22, 1976, Ser. No. 753,618
Int. Cl.² C07G *35/14*
U.S. Cl. 260—631 R **1 Claim**

1. A diol composition consisting essentially of a mixture of compounds represented by the structures:

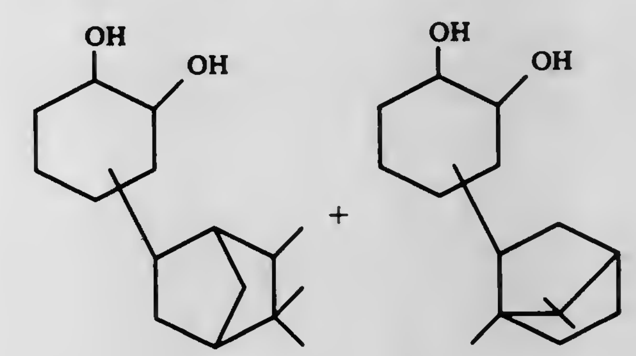

4,061,687
OXO PROCESS WITH RECOVERY OF COBALT HYDROCARBONYL IN SOLUTION FOR RECYCLE
Manfred Kaufhold, and Horst-Dieter Wulf, both of Marl, Germany, assignors to Chemische Werke Huls Aktiengesellschaft, Marl, Germany
Continuation-in-part of Ser. No. 315,823, Dec. 18, 1972, abandoned. This application Apr. 8, 1975, Ser. No. 566,523
Claims priority, application Germany, Dec. 30, 1971, 2165515
Int. Cl.² C07C *29/16*
U.S. Cl. 260—632 HF **9 Claims**

1. In the oxo process for converting higher olefins having 10 - 15 carbon atoms in the presence of a catalyst comprising cobalt hydrocarbonyl dissolved in a solvent, hydrogen and carbon monoxide to the respective oxo alcohols and decobalting said oxo alcohols with a first aqueous solution of an organic acid having 1 to 3 carbon atoms to form a second aqueous solution of an organic cobalt acid salt having 1 to 3 carbon atoms, the improvement comprising:

a. said solvent consisting essentially of a butanol selected

from the group consisting of n-butylalcohol, isobutylalcohol, secbutylalcohol and mixtures thereof;

b. treating said second aqueous solution in the presence of said solvent with a gaseous mixture of carbon monoxide and hydrogen at a temperature between about 140° to 200° C and a pressure between about 100 to 300 atmospheres to form a homogenous liquid phase;

c. cooling said homogenous liquid phase at a temperature of about 0° C to 110° C and thereby separating said homogenous liquid phase into an aqueous liquid phase and an organic liquid phase consisting essentially of butanol and cobalt hydrocarbonyl; and

d. recycling said organic liquid phase as said cobalt hydrocarbonyl dissolved in a solvent.

4,061,688

LIQUID PHASE FLUORINATION PROCESS

James J. Maul, Grand Island, and Victor A. Pattison, Clarence Center, both of N.Y., assignors to Hooker Chemicals & Plastics Corporation, Niagara Falls, N.Y.

Filed Dec. 6, 1976, Ser. No. 748,018

Int. Cl.² C07C *25/14*

U.S. Cl. 260—651 F **30 Claims**

1. A process for the preparation of fluorinated aromatic compounds of the formula

$$R_nAR(CF_{w'}X_{p'})_Z$$

comprises contacting at least one haloalkyl aromatic compound of the formula

$$R_nAR(CF_wX_p)_Z$$

in the liquid phase, with hydrogen fluoride in the presence of a catalyst acid system comprising fluosulfonic acid wherein

Ar is aryl

R is a substituent on the aryl nucleus selected from the group consisting of aryl, substituted aryl, halogen, alkyl, alkoxy, and substituted alkyl;

n is 0 to 9;

X is halogen atom other than fluorine;

w is 0 to 2;

p is 1 to 3;

w' is 1 to 3, and is greater than *w;*

p' is 0 to 2, and is less than *p;*

$w + p$ is 3;

$w' + p'$ is 3;

Z is 1–10; and

the maximum value of $n + Z$ is 10.

4,061,689

PROCESS FOR THE CONVERSION OF AROMATIC HYDROCARBONS

Ji-Yong Ryu, and Dalia Germanas, both of Des Plaines, Ill., assignors to UOP Inc., Des Plaines, Ill.

Filed Dec. 29, 1975, Ser. No. 644,785

Int. Cl.² C07C *3/56*

U.S. Cl. 260—671 R **12 Claims**

1. A process for the alkylation of an aromatic hydrocarbon comprising contacting the aromatic hydrocarbon with an alkylating agent at aromatic hydrocarbon alkylation conditions in the presence of a catalyst prepared by reacting titanium tetrafluoride with a support which contains surface hydroxyl groups and thereafter reducing with hydrogen at an elevated temperature to form titanium subfluoride, and recovering an alkylated aromatic hydrocarbon as a product of the process.

4,061,690

METHOD OF CATALYTIC CONVERSION OF BUTANE

Jean-Rene Bernard, Saint-Symphorien; Jacques Bousquet, Irigny, and Michel Grand, Saint-Symphorien, all of France, assignors to Societe Nationale Elf Aquitaine, Courbevoie, France

Filed June 9, 1976, Ser. No. 694,434

Claims priority, application France, June 17, 1975, 75.18911

Int. Cl.² C07C *3/42*

U.S. Cl. 260—676 R **16 Claims**

1. A method of catalytic conversion of a butane cut to propane, wherein said method consists in introducing into a reaction zone containing a catalyst consisting of acid mordenite on the one hand a butane cut and on the other hand hydrogen so that the partial hydrogen pressure is higher than 5 bar.

4,061,691

FLAME-RESISTANT POLYCARBONATE MOLDING COMPOSITIONS

Dieter Margotte, Krefeld-Bockum, and Hugo Vernaleken, Krefeld, both of Germany, assignors to Bayer Aktiengesellschaft, Leverkusen, Germany

Division of Ser. No. 458,620, April 8, 1974, Pat. No. 3,946,090. This application Nov. 24, 1975, Ser. No. 634,964

Claims priority, application Germany, Apr. 26, 1973, 2321055

Int. Cl.² C08L *67/02*

U.S. Cl. 260—860 **6 Claims**

1. A molding composition having an oxygen index of greater than 0.30 according to ASTM D-2863/70 comprising an aromatic polycarbonate having a molecular weight of between about 10,000 and 100,000 containing 0.5 to 20 percent by weight of a saturated, thermoplastic polyester fiber which is stable in a melt of the polycarbonate.

4,061,692

PROCESS FOR THE MANUFACTURE OF SWELLABLE, ABSORPTIVE POLYMERS OF POLYHYDROXY METHYLENE

Arno Holst, and Michael Kostrzewa, both of Wiesbaden, Germany, assignors to Hoechst Aktiengesellschaft, Germany

Filed Sept. 13, 1976, Ser. No. 722,624

Claims priority, application Germany, Sept. 15, 1975, 2541035

Int. Cl.² C08F *291/08, 18/24, 261/00*

U.S. Cl. 260—874 **5 Claims**

1. A process for the manufacture of absorptive polymers which are at least more than 50 per cent by weight insoluble in water, but capable of swelling in water, which comprises etherifying polyhydroxy methylene in a homogeneous phase in an aqueous alkaline solution with an α-halogen carboxylic acid, and prior to, during, or after the etherification process performing a further reaction with a cross-linking agent which is polyfunctional towards polyhydroxy methylene in an alkaline medium selected from the group consisting of epoxy compounds, halohydrins, polychlorinated higher alcohols, divinyl sulfone, acid chlorides, dichloroacetic acid and compounds in which the groups which are functional towards polyhydroxy methylene are the acryl amido group, the chloro azomethine group, or the allyloxy azomethine group.

4,061,693

RESIN COMPOSITION

Shigemitsu Kamiya, Kamakura, Japan, assignor to Nippon Zeon Co. Ltd., Tokyo, Japan

Filed Apr. 18, 1977, Ser. No. 788,433

Int. Cl.² C08L *51/04*

U.S. Cl. 260—876 R **7 Claims**

1. An acrylonitrile resin composition capable of affording shaped articles having superior alcohol resistance, impact strength, transparency and gas-impermeability, said composition consisting essentially of

A. a resinous copolymr obtained by polymerizing a monomeric mixture consisting of

1. 60 to 90% by weight of acrylonitrile,
2. 1 to 35% by weight of at least one acrylic monomer selected from the group consisting of alkyl acrylates and alkyl methacrylates with the alkyl group containing 1 to 6 carbon atoms, and
3. 0.5 to 15% by weight of an alkyl methacrylate with the alkyl group containing 12 to 18 carbon atoms; and

B. a graft copolymer obtained by polymerizing

1. 40 to 80 parts by weight of a monomeric mixture consisting of (i) 30 to 90% by weight of acrylonitrile, (ii) 1 to 70% by weight of at least one acrylic monomer selected from the group consisting of alkyl acrylates and alkyl methacrylates with the alkyl group containing 1 to 6 carbon atoms and (iii) 0 to 15% by weight of an alkyl methacrylate with the alkyl group containing 12 to 18 carbon atoms, in the presence of
2. 20 to 60 parts by weight of a diene-type rubbery polymer composed of at least 50% by weight of a conjugated diene unit and at most 50% by weight of an acrylonitrile unit, the total amount of the diene-type rubbery polymer (2) and the monomeric mixture (1) being 100 parts by weight; the ratio of the resinous copolymer (A) to the graft copolymer (B) being such that the content of the diene-type rubber polymer used to prepare the graft copolymer (B) being 3 to 20% by weight based on the weight of the composition.

4,061,694

LOW TEMPERATURE IMPACT STRENGTH MOLDING COMPOSITIONS

Eugene Gennaro Castagna, Clark, N.J., assignor to Dart Industries Inc., Los Angeles, Calif.

Filed Dec. 21, 1976, Ser. No. 753,060

Int. Cl.² C08F *297/08, 8/06, 8/50*

U.S. Cl. 260—878 B **14 Claims**

1. A polypropylene molding resin of improved low temperature impact strength obtained in a process comprising

I. providing a block copolymer having a melt flow rate in the range of from about 0.5 to about 1.5 grams per 10 minutes at 230° C and containing

a. from about 60 to about 95 percent by weight of a polypropylene block and

b. from about 5 to about 40 percent by weight of a block of a random copolymer of ethylene and another α-olefin, wherein the content of ethylene derived units in said random copolymer block ranges between 30 and 60 weight percent,

II. contacting said block copolymer with an oxygen containing compound selected from air, elemental oxygen, inorganic peroxide, organic peroxide, or mixtures thereof; melting and working the mixture of oxygen containing compound and block copolymer in a high shear zone to subject the mixture to substantial oxidative degradation, and

III. recovering a polymer product having a melt flow rate which is higher than that of the block copolymer provided in Step I.

4,061,695

PHOSPHATE ESTERS

Wun Ten Tai, Pallos Hills; Lawrence A. Mura, Homewood; Kenneth G. Phillips, River Forest, and Edward G. Ballweber, Glenwood, all of Ill., assignors to Nalco Chemical Company, Oak Brook, Ill.

Filed Nov. 14, 1975, Ser. No. 632,066

Int. Cl.² C07F *9/09;* **C02B** *5/06*

U.S. Cl. 260—929 **5 Claims**

1. An organophosphate composition comprising on a 100 weight percent total weight basis

a. from about 5 to 70 weight percent water, and

b. the balance up to 100 weight percent thereof being a phosphate ester composition,

c. said phosphate ester composition comprising on a 100 weight percent total weight basis

1. from 0 to about 15 weight percent inorganic phosphate,
2. the balance up to 100 weight percent of any given said phosphate ester composition being organophosphate material, and
3. said organophosphate material containing on a 100 weight percent total organophosphate weight basis from about 20 to 60 weight percent of polymeric material, said composition having been produced by the steps of

A. simultaneously

1. heating in a reaction zone at a temperature of from about 130° to 175° C at least one phosphoric acid material selected from the group consisting of phosphoric acid and polyphosphoric acid in admixture with at least one polyol which is characterized by
   a. having from 2 to 7 carbon atoms per molecule,
   b. having from 2 to 4 hydroxyl groups per molecule distributed so that not more than one oxygen atom is substituted on each carbon atom per molecule, and
   c. being selected from the group consisting of hydroxyl substituted saturated aliphatic hydrocarbons,

   in the presence of a minor amount of at least one inorganic base selected from the group consisting of alkali metal hydroxides, alkaline earth metal hydroxides, and ammonia, the mole ratio of said polyol to said phosphoric acid material as charged to said zone ranging from about 0.5 to 1.5, and the mole ratio of said inorganic base to said phosphoric acid material being from about 0.1 to 1.0,
2. maintaining said reaction zone at a subatmospheric pressure, ranging from greater than 0 to about 400 mm Hg., and
3. removing water from said zone at a rate at least about equal to the rate water generated in said reaction zone;

B. cooling the resulting reaction product to a temperature in the range of from about 60° to 130° C; and

C. admixing the so-cooled reaction product with and dissolving same in sufficient water to form a product solution comprised on a 100 weight percent total weight basis from about 5 to 70 weight percent water.

4,061,696

DIPHOSPHATES

Hartfrid Vollmer, Erftstadt Liblar; Franz-Josef Dany, Erftstadt Lechenich, and Joachim Wortmann, Turnich, all of Germany, assignors to Hoechst Aktiengesellschaft, Frankfurt am Main, Germany

Division of Ser. No. 521,501, Nov. 6, 1974, Pat. No. 3,998,764. This application Sept. 28, 1976, Ser. No. 727,459

Claims priority, application Germany, Nov. 9, 1973, 2356033

Int. Cl.² C07F *9/12*

U.S. Cl. 260—930 **4 Claims**

1. Agents which reduce the flammability of polyurethane moulding compositions, the agents being compounds of the following general formula

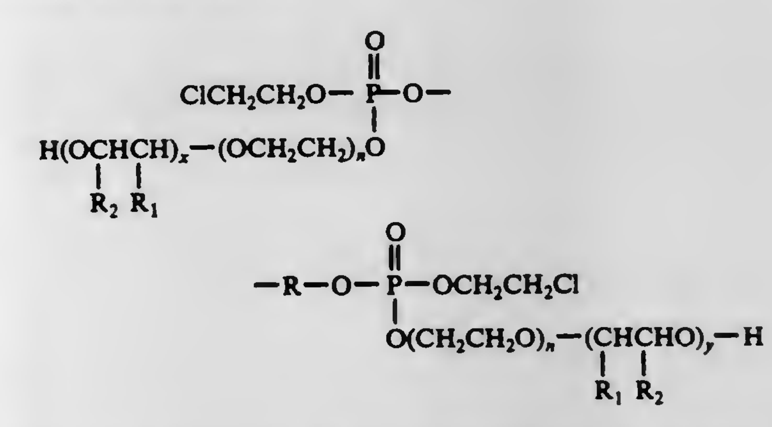

in which R is phenylene, or alkyl- or halogen-alkyl-substituted diphenylene methane, R_1 and R_2 are hydrogen, alkyl or a halo-

gen-substituted alkyl of 1 - 4 carbons, $x + y$ is a number of 0.1–3, and n is 1 or 2.

4,061,697

PHOSPHORUS CONTAINING FLAME RETARDING AGENTS WHICH ARE REACTIVE WITH ISOCYANATES

Hans Hübner, Leverkusen; Johannes Blahak, Cologne, and Hans-Joachim Meiners, Leverkusen, all of Germany, assignors to Bayer Aktiengesellschaft, Leverkusen, Germany

Filed Dec. 4, 1975, Ser. No. 637,630

Claims priority, application Germany, Dec. 17, 1974, 2459491

Int. Cl.² C07F *9/40*

U.S. Cl. 260—944 **6 Claims**

1. Flame retarding agents represented by the general formula

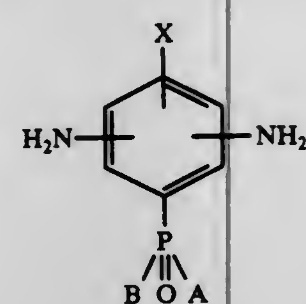

wherein

A and B, either both represent —OR groups wherein R represents an optionally branched C_1–C_8 alkyl group, or one represents a —OR group as defined above and the other represents an optionally branched C_1–C_{17} alkyl group, and

X represents hydrogen, halogen, an optionally branched C_1–C_8 alkyl group, a C_6–C_{12} aryl or aralkyl group, NH_2, CF_3, CN, COOR ,

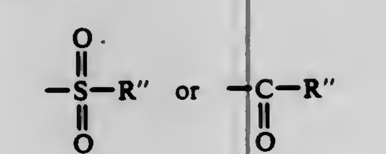

wherein:

R′ represents hydrogen or an optionally branched alkyl or cycloalkyl group having 1–10 C atoms and

R″ represents an optionally branched alkyl or cycloalkyl group having 1–10 C atoms.

4,061,698

HUMIDIFIER-NEBULIZER APPARATUS

Everett D. Thornwald, Glenview, Ill., assignor to Aerwey Laboratories, Inc., Deerfield, Ill.

Filed Apr. 18, 1975, Ser. No. 569,229

Int. Cl.² B01F *3/04;* **A61M** *15/00*

U.S. Cl. 261—78 A **6 Claims**

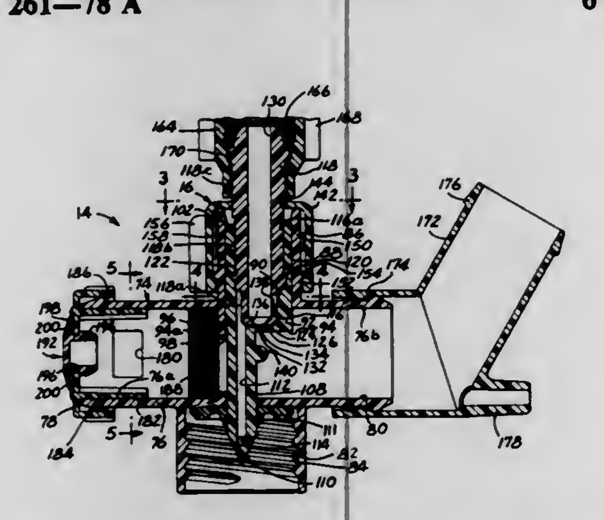

1. A humidifier-nebulizer apparatus for use with a source of pressurized gas, comprising, in combination, a liquid reservoir defining a primary liquid adapted to contain a quantity of liquid and having a humidifier discharge passage communicating with said primary chamber, said reservoir having an opening at its lower end defined by a generally annular wall, sparger means supported by said reservoir and including a liquid impervious bottom wall sealingly secured at its peripheral edge to said annular wall within said opening and a sparger plate spaced from said bottom wall and having a plurality of flow orifices therethrough, said sparger plate having a depending wall formed thereon the lower edge of which abuts said bottom wall, said depending wall being spaced inwardly from and parallel to said annular wall of said reservoir to define an annular passage therebetween, said depending wall having at least one opening therein, a filler tube extending generally longitudinally upwardly along said primary chamber and having a lower end connected to said annular wall such that the interior of said filler tube is in communication with said annular passage, and adapter head means mounted on said liquid reservoir, said adapter head means including a nebulizer discharge passage, a gas inlet passage connectible to a source of pressurized gas, a liquid supply passage in flow communication with the interior of said filler tube, a venturi passage in communication with said nebulizer discharge passage and said gas input passage, an aspiration passage communicating with said venturi passage and said liquid supply passage, and a bypass passage for selectively substantially bypassing input gas around said venturi passage, said adapter head being manipulatable to a first position to cause said bypass passage to be blocked such that pressurized gas introduced into said gas input passage will pass through said venturi passage and draw a liquid from said primary chamber for discharge in a nebulized gas-liquid state from said nebulizer discharge passage, said adapter head being further manipulatable to a second position wherein said bypass passage is in communication with said gas input passage and said liquid supply passage such that gas introduced into said gas input passage is caused to flow through said bypass passage and through said filler tube and sparger plate into said primary liquid chamber for discharge in a humidified state from said humidifier discharge passage.

4,061,699

CONTINUOUS PROCESS FOR PRODUCING OXIDE REFRACTORY MATERIAL

Paul Cichy, Buffalo, N.Y., assignor to The Carborundum Company, Niagara Falls, N.Y.

Continuation of Ser. No. 312,442, Dec. 6, 1972, which is a division of Ser. No. 153,317, June 15, 1971, Pat. No. 3,726,621. This application July 29, 1974, Ser. No. 492,628

Int. Cl.² B22D *23/08*

U.S. Cl. 264—5 **6 Claims**

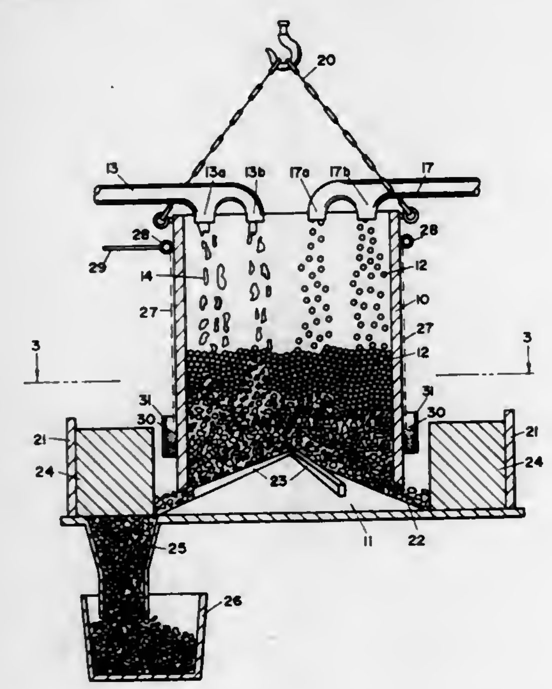

1. A continuous process for rapidly cooling and solidifying a melt of oxide refractory material, comprising the steps of:

1. providing, within a solidification chamber comprising a hollow cylindrical outer wall, said solidification chamber having a lower end having therein an opening, an initial supply at least 15 cm in depth of a non-reactive, non-melting particulate solid steel sphere cooling media, said solid steel sphere cooling media being of a material other than that of the oxide refractory material to be cooled and solidified; said cooling media having a size ranging from about 5 to about 60 mm;
2. casting a melt of the oxide refractory material into the solidification chamber over the cooling media, whereby the melt is rapidly cooled and solidified;
3. simultaneously with the casting of the oxide refractory melt into the solidification chamber, adding additional solid steel sphere cooling media having a size ranging from about 5 to about 60 mm over the initial supply of cooling media, the oxide refractory melt being cast upon both the initial supply and the added cooling media; and
4. recovering the cooling media and solidified oxide refractory melt through the opening in the lower end of the solidification chamber.

4,061,700

FUGITIVE BINDER FOR NUCLEAR FUEL MATERIALS

Timothy Joseph Gallivan, Wilmington, N.C., assignor to General Electric Company, San Jose, Calif.

Filed Sept. 10, 1975, Ser. No. 612,084

Int. Cl.² G21C *21/00*

U.S. Cl. 264—0.5 **9 Claims**

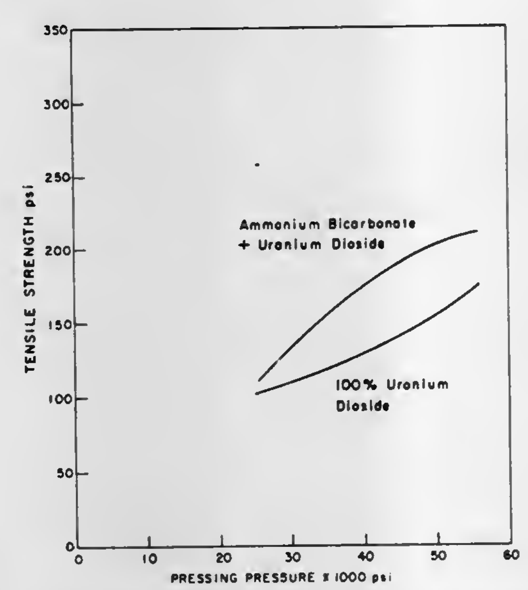

1. A process for sintering a body of nuclear fuel material comprising the steps of

a. admixing the nuclear fuel material in a particulate form with a binder having a particle size less than 400 mesh so as to achieve a uniform dispersal of said binder in the nuclear fuel material so that said binder and said nuclear fuel material undergo adhesion, said binder being comprised of ammonium bicarbonate, ammonium bicarbonate carbamate, ammonium sesquicarbonate, ammonium carbamate and mixtures thereof,

b. forming the resulting mixture by pressing into a green body having a density ranging from about 30% to about 70% of theoretical density,

c. heating said green body at a temperature sufficient to decompose substantially all of the binder into gases that enter an atmosphere maintained over said green body,

d. heating the body at a temperature sufficient to produce a sintered body and further decompose any binder residues that enter the atmosphere maintained over said body, and

e. cooling the sintered body in the atmosphere maintained over said body.

4,061,701

MANUFACTURE OF SOFT AND RESILIENT FOAMS

Fritz Stastny, Ludwigshafen; Rudolf Gaeth, Limburgerhof; Udo Haardt, and Heinz-Hermann Koerner, both of Ludwigshafen, all of Germany, assignors to BASF Aktiengesellschaft, Ludwigshafen, Germany

Filed Dec. 12, 1973, Ser. No. 423,888

Claims priority, application Germany, Dec. 20, 1972, 226225

Int. Cl.² C08J *9/00*

U.S. Cl. 264—51 **3 Claims**

1. A process for the manufacture of composite soft and resilient foams by foaming, in a mold, a mixture of

A. foamed soft and resilient particles of olefin polymers selected from the group consisting of homopolymers of ethylene, propylene, butylene and copolymers of ethylene with other ethylenically unsaturated monomers containing more than about 50 percent by weight of copolymerized ethylene units, having more than 25% X-ray crystallinity at 25° C, of particle size from about 3 to 50 mm and bulk density from 5 to 100 g/l and

B. a foamable mixture of polyisocyanates, polyols, water, catalysts and, optionally, other auxiliaries for the manufacture of polyurethane foams,

wherein approximately 90 to 30% of the volume of the mold is filled with foamed soft and resilient particles (A), either in loose form or as agglomerates fused or stuck together and the foamable mixture (B) is injected into the communicating cavities thereby produced, under a pressure of 1.5 to 8 bars, and is allowed to foam up.

4,061,702

METHOD OF MAKING A PLASTIC CONTAINER

Milton Kessler, 6690 Harrington Ave., Youngstown, Ohio 44512

Continuation-in-part of Ser. No. 552,111, Feb. 24, 1975, abandoned. This application Sept. 27, 1976, Ser. No. 726,587

Int. Cl.² B29D *23/20*

U.S. Cl. 264—24 **25 Claims**

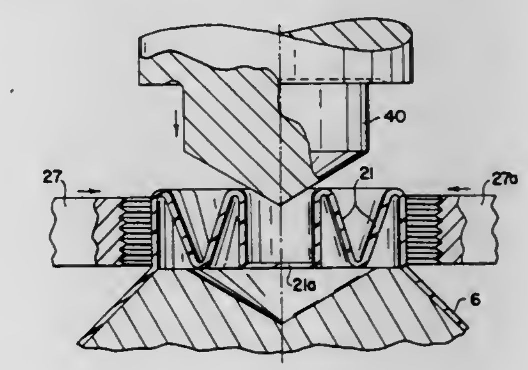

1. The method of forming a unitary thermoplastic container shell having a thin walled portion and a thicker walled portion comprising the steps of:

a. forming a core having a plurality of surface increasing extensions thereon;

b. applying a thermoplastic coating to said core to form a thin walled container shell;

c. curing said coating;

d. removing said container shell from said core;

e. placing said container shell on a shell supporting mandrel;

f. heating the portion of said container shell formed over said core surface increasing extensions to its plastic flow temperature; and,

g. compressing the said portion of said container shell formed over said core surface increasing extensions into a thickened wall portion of said container.

4,061,703

METHOD OF PATCHING VOIDS IN A SEMI-CONDUCTIVE COMPONENT OF INSULATED ELECTRIC CABLE, AND COMPOUND THEREFOR

Sidney Rothenberg, Fairfield, and Joseph Edward Vostovich, Bridgeport, both of Conn., assignors to General Electric Company, New York, N.Y.

Filed May 16, 1974, Ser. No. 470,399

Int. Cl.² B29H *5/01*

U.S. Cl. 264—36 **15 Claims**

1. A method of patching voids in a body of a semiconductive component of an insulated electrical cable, comprising the steps of filling a void in a semiconductive body with a curable semiconductive polymeric compound consisting essentially of chlorosulfonated polyethylene, conductive filler material, and lauroyl peroxide in an amount of about 2 to about 8 parts by weight per 100 parts by weight of the chlorosulfonated polyethylene, and heating the curable semiconductive polymeric composition to a temperature of at least about 200° F.

4,061,704

TERTIARY-ALKYLPEROXY ALKYL CARBONATE INITIATORS FOR HOT AIR VULCANIZATION OF SILICONE RUBBER

James A. Barter, Akron, Ohio, assignor to PPG Industries, Inc., Pittsburgh, Pa.

Filed July 18, 1975, Ser. No. 597,123

Int. Cl.² B29H *5/01*

U.S. Cl. 264—83 **10 Claims**

1. A method of vulcanizing a silicone rubber composition which comprises:

a. preparing a heat-vulcanizable composition comprising

i. 100 parts of organopolysiloxane polymer gum curable to an elastomeric state and represented by the formula

$$-\underset{R}{\overset{R}{\mathrm{Si}}}-O-\underset{R}{\overset{R}{\mathrm{Si}}}-O-\underset{R}{\overset{R}{\mathrm{Si}}}-O-$$

wherein:

R is selected independently from the group consisting of monovalent hydrocarbon groups, monovalent halogenated hydrocarbon groups, and monovalent cyanoalkyl groups, and

ii. in a minor amount between about 0.1 and 10 parts per 100 parts of organopolysiloxane polymer sufficient to provide complete surface cure, a tertiary-alkylperoxy alkyl carbonate cure initiator represented by the formula

$$R_1-O-O-\overset{\overset{\displaystyle O}{\|}}{C}-O-R_2$$

wherein:

R_1 is a tertiary alkyl group having 4 to 14 carbons and R_2 is an alkyl group having 8 to 26 carbons;

b. shaping heat-vulcanizable composition to form an article having a surface; and

c. contacting at least a part of the surface of the article with a heated gas for between about 1 and 120 seconds at a temperature above about 315° C. and at about atmospheric pressure or below in order to cure the article to an elastomeric state and to provide a complete surface cure.

4,061,705

INJECTION BLOW MOLDING PROCESS

Paul Marcus, 85 Pascack Road, Pearl River, N.Y. 10965

Division of Ser. No. 551,274, Feb. 20, 1975, abandoned, and a continuation-in-part of Ser. No. 558,819, March 16, 1975, Pat. No. 3,990,826, which is a continuation of Ser. No. 318,703, Dec. 27, 1973, abandoned, which is a division of Ser. No. 158,161, June 30, 1971, Pat. No. 3,776,991. This application Feb. 23, 1976, Ser. No. 660,706

Int. Cl.² B29C *17/07;* **B29D** *9/04*

U.S. Cl. 264—89 **19 Claims**

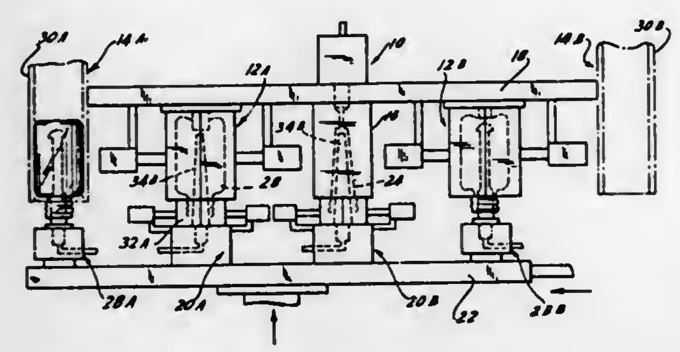

1. A method of injection blow molding a selected oriented finished product on a single injection blow molding machine having at least two core rods, including a first temperature controlled core rod and a second blow core rod, comprising the steps of:

injection molding a parison at an injection molding station about the first core rod into a selected configuration;

conditioning the parison to orientation temperature with the first core rod while at the injection molding station and during transferring thereof to a blow molding station;

transferring the parison while it is on the first core rod to the blow molding station;

removing the parison from the first core rod and associating it with the second core rod at the blowing station;

while the parison is at orientation temperature, blowing the parison by utilization of the second core rod into the configuration of the finished product; and

removing the oriented finished product.

4,061,706

PROCESS FOR THE CONTINUOUS MELT THERMOFORMING OF POLYMERS

Peter Roe Duffield, Toronto; Peter Robin Flockton, St. Lambert; Rupert Martin Lillis, Glen Burnie; Brian Maurice Turner, Sarnia, and Donald Edward Crowell, Kingston, all of Canada, assignors to Du Pont of Canada Limited, Montreal, Canada

Continuation of Ser. No. 443,343, Feb. 19, 1974, abandoned. This application Oct. 22, 1975, Ser. No. 624,972

Claims priority, application Canada, Feb. 28, 1973, 164867

Int. Cl.² B29C *17/04*

U.S. Cl. 264—90 **20 Claims**

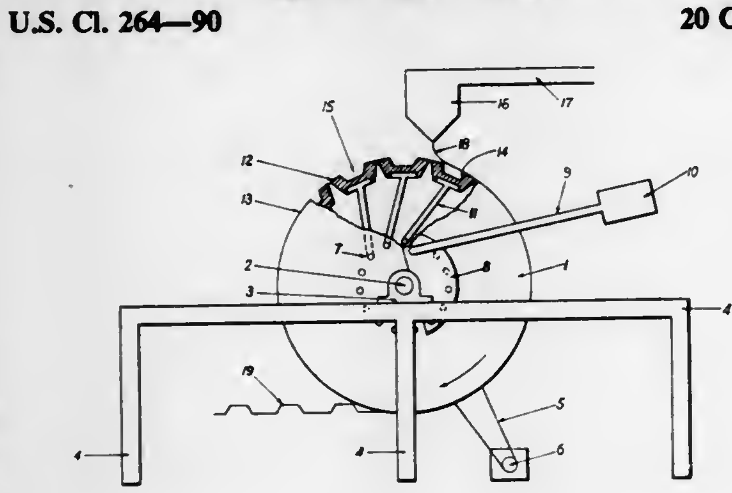

1. A process for the continuous melt thermoforming of articles of substantially uniform thickness derived from a thermoplastic polymer of low zero shear viscosity comprising the steps of:

a. extruding a flat web of molten polymer in a downward direction and directly over a series of mould cavities formed by a mould surface in a mould block moving at a predetermined speed, and sequentially covering said mould cavities with said flat web,

b. applying a vacuum to the mould cavities sufficient to cause the web of molten polymer to contact the surface of the mould cavity, said mould block having a lower surface and being constructed substantially entirely from porous sintered metal whereby said vacuum is uniformly transmitted between said lower surface and said mould cavities in said mould surface.

c. cooling the polymer in said cavities,

d. maintaining substantially uniform thickness of the articles by controlling the extrusion of the flat web of polymer, the application of vacuum, the contacting of the web of molten polymer with the mould cavities and the speed at which the mould cavities move, and

e. removing the articles.

4,061,707

PROCESS AND APPARATUS FOR HEAT SETTING BIAXIALLY ORIENTED TUBULAR POLYETHYLENE TEREPHTHALATE FILMS

Ryota Nohtomi; Masayoshi Sugiyama, and Tuyoshi Shigeyoshi, all of Fuji, Japan, assignors to Minnesota Mining and Manufacturing Company, St. Paul, Minn.

Filed Oct. 6, 1975, Ser. No. 619,818

Claims priority, application Japan, Oct. 8, 1974, 49-115198

Int. Cl.² B29C *25/00*

U.S. Cl. 264—95 **5 Claims**

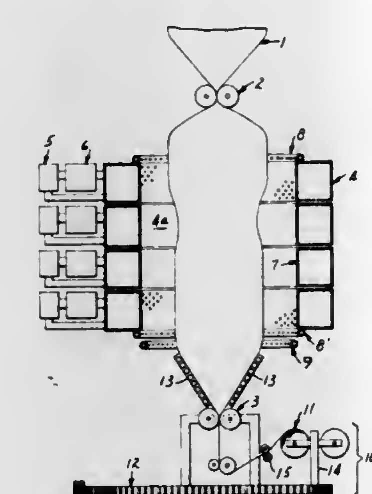

1. In the process for producing polyethylene terephthalate film which comprises a step for heat setting a tubular biaxially oriented polyethylene terephthalate film by continuously heating a film bubble expanded by a gas pressure, the improvement comprising:

a. heat setting said film in a chamber by blowing hot gaseous blasts against the exterior surface of said film bubble; wherein the temperature of the hot blasts is about 220° C.-240° C. along the first 1/5-1/3 of the chamber and wherein the temperature of the blasts thereafter declines to about 195° C.-215° C. at the final stage of heat setting, and

b. reducing the diameter of the tubular film during heat setting by about 5%-15% of that before heat setting and stretching the length thereof by about 2%-7% of that before heating;

wherein sway of the film is eliminated during heat setting.

4,061,708

STABILIZED POLYAMIDES

Stanley David Lazarus, Petersburg, and Julian Harold Newland, Richmond, both of Va., assignors to Allied Chemical Corporation, Morris Township, N.J.

Filed Jan. 10, 1977, Ser. No. 758,258

Int. Cl.² C08K *5/56*

U.S. Cl. 264—211 **1 Claim**

1. In a process of melt-spinning yarn from a synthetic polyamide having a relative viscosity of at least 60, the improvement which consists of incorporating in said polyamide a stabilizing amount of a copper compound selected from the group consisting of copper II dichloro bis(pyridine) and copper II dichloro bis(quinoline), said process being further characterized in that said copper compound is incorporated in said polyamide when said polyamide is in the molten state immediately prior to spinning, by forming a stable dispersion comprising a liquid polyisobutene and said copper compound and injecting the dispersion with mixing into said molten polyamide, said liquid polyisobutene having a viscosity of 3 to 70 poise at 20° C., and said dispersion containing 10 to 60 weight percent of said copper compound.

4,061,709

MANUFACTURING TEXTURED GLOVES OF SILICONE RUBBER

Carl W. Miller, Bay City; Lester C. Vandenberg, Midland, and Wayne H. Statt, Saginaw, all of Mich., assignors to Dow Corning Corporation, Midland, Mich.

Filed June 25, 1975, Ser. No. 590,347

Int. Cl.² B29C *13/00*

U.S. Cl. 264—293 **4 Claims**

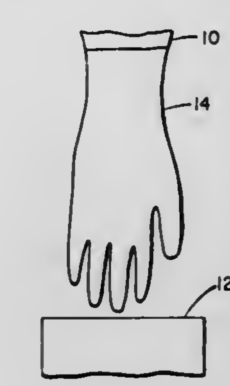

1. In a method of manufacturing textured gloves by repeatedly dipping a glove form into a solvent dispersion of uncured silicone rubber to build up a plurality of layers thereon, followed by drying and curing the silicone rubber layers to form a glove, the additional step, prior to curing the layers, of exposing the uncured solvent-containing surface of the last layer of silicone rubber to a wet atmosphere as the solvent evaporates until a fine non-coalescing layer of fluid particles has been deposited over the surface of the last layer, the atmosphere being chosen so that the fluid particles have the same or greater heat of vaporization than said solvent whereby a texturized surface effect is produced.

4,061,710

MOLDED ARTICLES

Werner Schäfer, Diedenbergen; Wolfram Busch, Massenheim-Gartenstadt; Hermann Wallhäusser, Taunusstein-Wehen; Manfred Richter, and Siegfried Wilhelm, both of Wiesbaden, all of Germany, assignors to Rutgerswerke Aktiengesellschaft, Frankfurt am Main, Germany

Filed June 10, 1975, Ser. No. 585,619

Claims priority, application Germany, June 14, 1974, 2428629

Int. Cl.² B29G *3/00;* **C08G** *12/32*

U.S. Cl. 264—300 **13 Claims**

1. A moulding composition comprising (a) a non-modified, unetherified melamine-formaldehyde resin having a molar

ratio of melamine to formaldehyde in the range 1:1.5 to 1:2.5 which upon hardening is capable of withstanding heating at 200° C for 2 hours in air without causing significant structural damage or color change to moulded articles made from moulding compositions in which it has been incorporated, (b) a latent accelerator being a reaction product of melamine with at least one component selected from the group consisting of (1) an at most olefinically unsaturated at most dibasic carboxylic acid and (2) an organic sulfonic acid, (c) an inorganic filler having low adsorption characteristics and an oil adsorption value of 10 to 40, (d) a further inorganic filler and (e) an external lubricant comprising at least one carboxyorganosiloxane esterified with an alcohol containing up to 4 carbon atoms, the melamine-formaldehyde resin (a) being present in an amount of from 25 to 60% by weight, the accelerator (b) being present in an amount of from 0.01 to 2% by weight, the total amount of inorganic fillers (c) and (d) being at most 65% by weight, the weight ratio of filler (c) to filler (d) being from 1:1 to 1:10, and the total external lubricant (e) being present in the amount of from 0.1 to 1.5% by weight, all proportions being refered to the total composition.

4,061,711
RECOVERY OF VANADIUM VALUES
Kenneth A. Morgan, Hoffman Estates, and Robert R. Frame, Glenview, both of Ill., assignors to UOP Inc., Des Plaines, Ill.
Filed Oct. 26, 1976, Ser. No. 735,704
Int. Cl.² C01G *31/00*
U.S. Cl. 423—67 **6 Claims**

1. A process for the recovery of vanadium values from a vanadium bearing source containing metal impurities wherein the vanadium is present in the form of an oxide in its highest valence state consisting of leaching said vanadium bearing source with an ammoniacal medium wherein ammonia is present in a range of from about 1 to about 14 molar at a temperature of from about 50° to about 300° C. and a pressure of from about 1 to about 200 atmospheres, separating the resultant ammonium vanadate solution from insoluble metal impurities, cooling said solution to below about 50° C. to precipitate solid ammonium vanadate and separating the latter from the mother liquor, calcining the separated solid ammonium vanadate at a temperature of from about 250° to about 600° C. to convert the same to vanadium pentoxide, and recovering said vanadium pentoxide.

4,061,712
RECOVERY OF VANADIUM VALUES
Kenneth A. Morgan, Hoffman Estates, Ill., and Marilyn Miller, Tucson, Ariz., assignors to UOP Inc., Des Plaines, Ill.
Filed Oct. 26, 1976, Ser. No. 735,703
Int. Cl.² C01G *31/00*
U.S. Cl. 423—67 **11 Claims**

1. A process for the recovery of vanadium values from a vanadium bearing source consisting of the steps of:
a. leaching the vanadium bearing source with caustic solution;
b. separating the pregnant leach liquor from insoluble tailings;
c. treating said pregnant leach liquor with ammonia and carbon dioxide at a pH in the range of from about 6.0 to about 9.0 thereby precipitating insoluble ammonium vanadates therefrom;
d. separating the precipitated insoluble ammonium vanadates grom caustic solution, ammonium compounds and soluble vanadates;
e. stripping said caustic solution with steam to remove ammonia;
f. supplying the resultant vaporous mixture of steam and ammonia to step (c) for contact therein with said pregnant leach liquor;
g. recycling stripped caustic solution from stripping step (e) to leaching step (a); and
h. calcining said precipitated insoluble ammonium vanadates to produce vanadium oxide therefrom.

4,061,713
PURIFICATION OF EXHAUST GASES
Guenter Weidenbach, Hannover, Germany; André Lecloux, and Yves Gobillon, both of Brussels, Belgium, assignors to Kali-Chemie Aktiengesellschaft, Hannover, Germany
Filed Aug. 30, 1976, Ser. No. 718,512
Claims priority, application Germany, Aug. 30, 1975, 2538706
Int. Cl.² B01D *53/34*
U.S. Cl. 423—213.5 **8 Claims**

1. In a process for purifying exhaust gases from an internal combustion engine being operated with a substantially stoichiometric fuel-to-air mixture, said exhaust gases containing hydrocarbons (C_nH_{2n+2}), carbon monoxide and nitric oxide and having an L-value of between about 0.8 and 1.2 where

$$L = \frac{[O_2] + 0.5\,[NO]}{0.5\,[CO] + 0.5\,[H_2] + \frac{6n+2}{4}\,[C_nH_{2n+2}]}$$

and n is an integer, comprising the step of contacting said exhaust gases at an elevated temperature with a catalyst supported on a carrier which has been calcined at a temperature of at least about 800° C, whereby said hydrocarbons, carbon monoxide and nitric oxide are simultaneously removed from said exhaust gases, the improvement comprising said catalyst essentially consisting of said carrier having distributed thereon a mixture from about 0.01 to 0.1% by weight each of molybdenum and rhodium and from 0 to about 0.1% by weight of platinum.

4,061,714
PROCESS FOR SEPARATING AN ACID FROM A GASEOUS MIXTURE
Mervyn Edward Dennant Turner, Stockton-on-Tees, England, assignor to Imperial Chemical Industries Limited, London, England
Filed Sept. 29, 1975, Ser. No. 617,402
Claims priority, application United Kingdom, Oct. 14, 1974, 44408/74
Int. Cl.² B01D *53/34*
U.S. Cl. 423—220 **8 Claims**

1. In a process for separating carbon dioxide from a gaseous mixture by absorbing it in an aqueous alkaline absorbing solution of a salt of ammonium or of an alkali metal and regenerating the said solution, the improvement which comprises inhibiting the corrosion of mild steel or stainless steel surface in contact with the said solution by having present therein an amount between 0.02% and 1.0% by weight of an aromatic compound having at least one nitro group and at least one hydroxyl group substituted in the same benzene nucleus or a compound formed from the said aromatic compound in the solution and an amount sufficient to activate absorption of an activator selected from the group consisting of arsenite ions, arsenate ions, monoethanolamine, diethanolamine, ethylamino ethanol, glycine, N-ethyl-β-alanine and N-ethyl glycine.

4,061,715
PROCESS FOR CONVERSION OF ALKALINE EARTH SULFITES AND BISULFITES INTO OXIDES AND CARBONATES
Salvatore A. Guerrieri, 503 Beverly Road, Newark, Del. 19711
Filed July 5, 1974, Ser. No. 485,918
Int. Cl.² C01B *17/00;* **C01F** *1/00, 5/24;* **C01B** *13/14*
U.S. Cl. 423—242 **10 Claims**

1. A process for treating an alkaline earth metal sulfite or bisulfite selected from the group consisting of the sulfite or bisulfite of calcium and magnesium in particulate form to recover the alkaline earth metal values thereof in the form of an alkaline earth metal oxide which comprises: contacting said alkaline earth metal sulfite with a gaseous stream including hydrogen and water vapor at a temperature of from 450° to 1000° C.

4,061,716
PROCESS FOR THE PRODUCTION OF SORBENT SOLIDS FOR USE IN THE DESULFURIZATION OF GASES
Patrick John McGauley, 7 Plymouth Road, Port Washington, N.Y. 11050
Continuation-in-part of Ser. No. 509,781, Sept. 27, 1974, abandoned, which is a continuation-in-part of Ser. No. 403,950, Oct. 5, 1973, abandoned. This application June 18, 1976, Ser. No. 697,384
Int. Cl.² C01B *17/60*
U.S. Cl. 423—244 **16 Claims**

1. A process for the preparation and utilization of sorbent solids having particular utility in reducing the sulfur compound content of combustion gases and reducing gases, which comprises the steps of:
a. mixing (i) finely divided solids containing a compound, selected from the group consisting of iron and calcium compounds, as an active component, with (ii) a liquid selected from the group consisting of water, sulfuric acid, and solutions containing sulfuric acid to produce agglomerated particles of moist solids that contain water soluble and reversibly hydratable compounds, which solids are essentially free of individual particles smaller than ten microns in diameter,
b. drying the above agglomerated moist solids by contact with relatively sulfur-free gases in a fluid bed drier, at temperatures between 80° and 300° C., to remove the water therefrom and thereby to produce porous dry solids containing agglomerated particles high in surface area and to cure water soluble and reversibly hydratable compounds and thereby to produce particles high in mechanical strength,
c. modulating the flow rate of gas in contact with the above solids to elutriate from the fluid bed of the drier, a major fraction of the particles smaller than about 200 microns in diameter,
d. collecting a fraction of the classified, porous, agglomerated, dry solids that remain in the bed of the drier, as product of the sorbent preparation procedures of the process,
e. utilizing the collected sorbent solids by contact with sulfur-bearing gases in gas-solids contacting equipment to generate, as products of the process, spent sorbent solids containing sulfur compounds, and a gas reduced in content of sulfur, and
f. repetitively regenerating and reusing at least a major fraction of said spent solids.

4,061,717
DIRECTED CRYSTALLIZATION OF SYNTHETIC ALUMINOSILICATES
George T. Kerr, Lawrenceville, and Louis D. Rollmann, Princeton, both of N.J., assignors to Mobil Oil Corporation, New York, N.Y.
Continuation-in-part of Ser. No. 511,902, Oct. 3, 1974, abandoned. This application June 18, 1976, Ser. No. 697,646
Int. Cl.² C01B *33/28*
U.S. Cl. 423—329 **20 Claims**

1. A process of synthesising a crystalline aluminosilicate zeolite from an aqueous reaction mixture containing sources of silicate, of aluminate and of cations in quantity at least equivalent to the aluminum in said mixture, characterized by the fact that said source of cations comprises a polymer selected from ionenes and ionomers of such equivalent weight, and in such quantity, as to balance the negative charge on 1 to 100 percent of the aluminum-containing tetrahedra of the resulting zeolite with positively charged polymer nitrogen atoms.

4,061,718
METHOD FOR THE RECOVERY OF AMMONIA FROM LIQUOR FROM THE FILTERS OF AMMONIA-SODA PLANTS
Jean Verlaeten, and Paul Demilie, both of Brussels, Belgium, assignors to Solvay & Cie., Brussels, Belgium
Filed Nov. 5, 1975, Ser. No. 628,960
Claims priority, application France, Nov. 9, 1974, 74.37846
Int. Cl.² C01C *1/02*
U.S. Cl. 423—356 **8 Claims**

1. In a method for the recovery of ammonia from liquor from filters of ammonia-soda plants which contains free ammonia and ammonium chloride, wherein the liquor is heated and traversed by a current of steam in a heating column to release more particularly the free ammonia, then is treated in a prelimer with a basic agent in an amount sufficient to decompose the major part but not the whole of the ammonium chloride with liberation of ammonia and is finally treated with steam so as to entrain liberated gaseous products in a still where there also is introduced the balance of basic agent needed to decompose the whole of the ammonium chloride, the improvement wherein: prelimer is lime, the balance used in the still is an alkali metal hydroxide, and the amount of alkali metal hydroxide added is controlled in response to the presence of ammonium ions in the still outlet so as to minimize said amount of alkali metal hydroxide added.

4,061,719
PROCESS OF CONDUCTIVE CARBON BLACK FOR USE IN DEPOLARIZATION MASSES IN DRY BATTERIES
Erich Schallus, Cologne; Gerhard Mietens, Hurth; Gregor Fucker, Erftstadt-Liblar; Jürgen Petrell, Weilerswist, and Friedrich Wilhelm Dorn, Hurth-Hermulheim, all of Germany, assignors to Hoechst Aktiengesellschaft, Frankfurt am Main, Germany
Filed Apr. 7, 1976, Ser. No. 674,575
Claims priority, application Germany, Apr. 10, 1975, 2515633
Int. Cl.² C01B *31/00, 31/02;* **C09C** *1/48*
U.S. Cl. 423—445 **8 Claims**

1. A process for making conductive carbon black for use in depolarization masses in dry batteries, which comprises intimately mixing an aqueous suspension of carbon black having an AS-number higher than 15 and having been obtained by subjecting hydrocarbons, which are liquid at room temperature, to thermal conversion at temperatures of 1200° up to 2000° C, under pressures of 1 up to 80 atmospheres, and in the presence of oxygen or oxygen-containing gases, and water-scrubbing the resulting carbon black-containing reaction gas, with 0.5 up to 10 g, per gram of carbon black, of vaporizable aliphatic or cycloaliphatic hydrocarbons having a boiling range of 25° up to 100° C, the mixing operation being effected at temperatures of 5° up to 120° C, under pressures of 1 up to 20 atmospheres, in liquid phase, and for a period of 1 up to 20 minutes, separating the resulting carbon black from the liquid phase, heating and thereby freeing the carbon black from hydrocarbons and water, and increasing the temperature over a period of 2 up to 30 minutes to 1100° up to 2200° C.

4,061,720
PREPARATION OF AMMONIUM AND POTASSIUM ZIRCONIUM CARBONATES
Raymond Francis Phillips, Cheadle Holme, England, assignor to Magnesium Elektron Limited, Swinton, England
Continuation of Ser. No. 297,415, Oct. 13, 1972, abandoned. This application Oct. 20, 1975, Ser. No. 623,992
Int. Cl.² C01G *25/00*
U.S. Cl. 423—265 **5 Claims**

1. In an aqueous solution of ammonium zirconium carbonate, the improvement wherein said solution

a. contains 18-25% by weight of zirconium expressed as zirconium dioxide;

b. has a molar ratio of carbonate to zirconium not greater than 2.05;

c. is capable of imparting thixotropic properties to aqueous dispersions of polymers and copolymes when mixed therewith; and

d. is stable for at least 10 hours at a temperature of 60° C.

2. A solution as claimed in claim 1 which is further stabilized by the addition of a compound selected from tartaric and gluconic acid.

4,061,721

HYDROGEN PEROXIDE STABILIZATION WITH PHENYLPHOSPHONIC ACIDS

W. Albert Strong, Wadsworth, Ohio, assignor to PPG Industries, Inc., Pittsburgh, Pa.

Filed Nov. 28, 1975, Ser. No. 636,322

Int. Cl.² C01B *15/02*

U.S. Cl. 423—272 **10 Claims**

1. A stabilized aqueous hydrogen peroxide solution containing a minor stabilizing concentration, sufficient to inhibit decomposition of hydrogen peroxide induced by polyvalent metal cation contamination, of soluble stabilizer selected from the group consisting of phenylphosphonic acids having 0 to 3 lower alkyl substituents on the phenyl group, and alkali metal and ammonium salts thereof.

6. A method of stabilizing aqueous hydrogen peroxide which comprises:

adding to an aqueous hydrogen peroxide solution a minor stabilizing amount, sufficient to inhibit decomposition of hydrogen peroxide induced by polyvalent metal cation contamination, of soluble stabilizer selected from the group consisting of phenylphosphonic acids having 0 to 3 lower alkyl substituents on the phenyl group, and alkali metal and ammonium salts thereof.

4,061,722

SELECTED QUATERNARY AMMONIUM SALTS OF PILOCARPINE USEFUL IN REDUCING INTRAOCULAR PRESSURE IN WARM-BLOODED ANIMALS

Nicolae S. Bodor, Lawrence, Kans., assignor to INTERx Research Corporation, Lawrence, Kans.

Filed Apr. 26, 1976, Ser. No. 680,437

Int. Cl.² A61K *31/415;* **C07D** *233/64*

U.S. Cl. 424—273 R **17 Claims**

1. A method for reducing intracular pressure in a warm-blooded animal in need of said response which comprises topically administering to the ophthalmic membrane thereof, an effective amount of a compound having the formula:

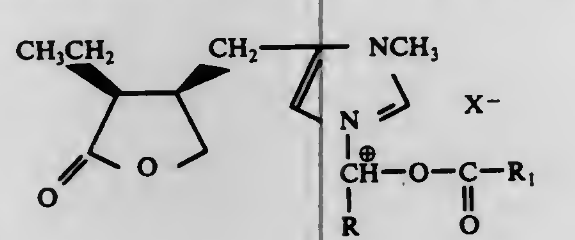

wherein R represents a member selected from the group consisting of a hydrogen atom, a C_1-C_{20} open chain or cyclo alkyl group, a C_1-C_{20} alkoxyalkyl group, a C_1-C_{20} alkanoyloxyalkyl group, a C_1-C_{20} haloalkyl group, a C_1-C_{20} carboxyalkyl group, a phenyl group, a naphthyl group and a substituted phenyl or naphthyl group whose substituents are selected from the group consisting of a halogen atom, an O-C_1-C_4 alkyl group, an O-C_1-C_8 alkanoyl group, a nitro group, a carboxyl group, and a carboethoxy group; wherein R_1 represents a C_9-C_{22} straight or branched alkyl group,

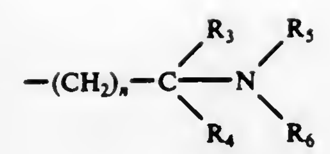

group, wherein R_3, R_4,R_5 and R_6 are each selected from the group consisting of a hydrogen atom, a methyl group, or an ethyl group, and wherein R_1 further represents a member selected from the group consisting of a C_0-O_{22} straight or branched

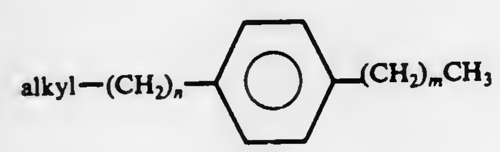

group, wherein *n* in each occurrence and *m* represent an integer of from 0 to 22, and an

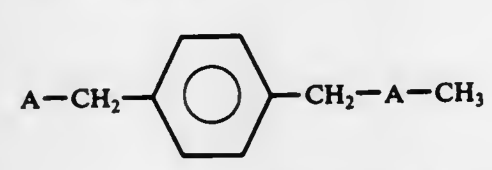

group, wherein A represents a -$(CH_2CH_2O)_p$ group, wherein the *p* represents an integer of from 0 to 22 and a cholic acid residue; and wherein X represents a member selected from the group consisting of a halogen atom, a methanesulfonate group, a fluorosulfonate group and a tosylate group.

4,061,723

PROCESS FOR PREPARING CONCENTRATED TETRAFLUOROBORIC ACID

Manfred Feser, Frankfurt am Main; Egon Joerchel, Hochheim, Main, and Jürgen Korinth, Hofheim, Taunus, all of Germany, assignors to Hoechst Aktiengesellschaft, Frankfurt am Main, Germany

Filed Nov. 12, 1976, Ser. No. 741,399

Claims priority, application Germany, Nov. 15, 1975, 2551433

Int. Cl.² C01B *35/06*

U.S. Cl. 423—276 **10 Claims**

1. A process for the preparation of tetrafluoroboric acid which comprises bringing a gas containing hydrogen fluoride into contact with a solid boron/oxygen compound to form concentrated tetrafluoroboric acid and separating said tetrafluoroboric acid from said solid boron/oxygen compound.

4,061,724

CRYSTALLINE SILICA

Robert William Grose, Mahopac, and Edith Marie Flanigen, White Plains, both of N.Y., assignors to Union Carbide Corporation, New York, N.Y.

Filed Sept. 22, 1975, Ser. No. 615,557

Int. Cl.² C01B *33/12*

U.S. Cl. 423—335 **2 Claims**

1. A silica polymorph consisting of crystalline silica, said silica polymorph after calcination in air at 600° C for 1 hour, having a mean refractive index of 1.39 ± 0.01 and a specific gravity at 25° C of 1.70 ± 0.05 g./cc.

4,061,725

MANUFACTURE OF GAMMA-IRON(III) OXIDE

Manfred Ohlinger, Frankenthal; Eduard Schoenafinger, Ludwigshafen; Walter Schneider, Ludwigshafen; Heinz Stritzinger, Ludwigshafen, and Guenter Vaeth, Limburgerhof, all of Germany, assignors to BASF Aktiengesellschaft, Ludwigshafen, Germany

Filed Oct. 15, 1976, Ser. No. 732,899

Claims priority, application Germany, Nov. 8, 1975, 2550307

Int. Cl.² C01G *49/02*

U.S. Cl. 423—634 **7 Claims**

1. In a process for the manufacture of acicular γ-iron(III) oxide wherein an aqueous solution of an iron(II) salt is reacted with an aqueous solution of an alkali metal hydroxide, the resulting suspensions of iron(II) hydroxide are oxidized with oxygen or oxygen-containing gases to goethite, the resulting goethite is reduced to magnetite and the magnetite is oxidized to acicular γ-iron(III) oxide, the improvement comprising: carrying out the oxidation of the iron(II) hydroxide suspension in three stages, wherein in a first stage from 0.1 to 4% by weight of the iron(II) present in the suspension is oxidized over a period of from 0.1 to 4 hours; in a second stage from 10 to 25% by weight of the iron(II) hydroxide originally present in the suspension is oxidized over an additional period of 1.5 to 6 hours by introducing at the beginning of said second stage from 0.04 to 0.1 mole per hour of oxygen/gram atom of the iron contained in the suspension and gradually increasing the introduction of oxygen during said second stage up to 0.1 to 0.25 mole per hour of O_2/g atom of iron at the end thereof; and in a third stage oxidizing the remaining iron(II) by introducing 0.3 to 0.8 moles of oxygen per hour per gram atom of iron contained in the suspension.

4,061,726

MANUFACTURE OF ACICULAR γ-IRON(III) OXIDE

Manfred Ohlinger, Frankenthal; Eduard Schoenafinger, Ludwigshafen; Guenter Vaeth, Limburgerhof; Heinz Stritzinger, Ludwigshafen; Eberhard Koester, Frankenthal; Hans Henning Schneehage, and Werner Steck, both of Mutterstadt, all of Germany, assignors to BASF Aktiengesellschaft, Ludwigshafen, Germany

Filed Oct. 15, 1976, Ser. No. 732,901

Claims priority, application Germany, Nov. 8, 1975, 2550308

Int. Cl.² C01G *49/02*

U.S. Cl. 423—634 **6 Claims**

1. In a process for manufacturing acicular γ-iron(II) oxide wherein an aqueous solution of an iron(II) salt is reacted with an aqueous solution of an alkali metal hydroxide and the resulting suspension of iron(II) hydroxide is oxidized with oxygen or oxygen-containing gases to give goethite, reducing the resulting goethite to magnetite and oxidizing the magnetite to acicular γ-iron(III) oxide, the improvement comprising: carrying out the oxidation of the iron(II) hydroxide suspension in three stages wherein in a first stage from 4 to 15% by weight of the amount of iron(II) present is oxidized in the course of from 0.4 to 5 hours, in a second stage from 60 to 85% by weight of the amount of iron(II) originally present in the suspension is oxidized over an additional period of from 1.5 to 6 hours by introducing 0.3 to 0.9 moles per hour of oxygen/gram atom of the iron contained in the suspension at the beginning of said second stage and gradually increasing the supply of oxygen during said second stage up to 0.7 to 1.5 moles per hour of oxygen/gram atom of iron at the end thereof; and in a third stage oxidizing the remaining iron(II) by introducing 1.5 to 2.5 moles of oxygen per hour per gram atom of iron contained in the suspension.

4,061,727

MANUFACTURE OF γ-IRON(III) OXIDE

Guenter Vaeth, Limburgerhof; Manfred Ohlinger, Frankenthal; Heinz Stritzinger; Eduard Schoenafinger, both of Ludwigshafen; Eugen Wettstein, Germersheim, and Wolfgang Guth, Ludwigshafen, all of Germany, assignors to BASF Aktiengesellschaft, Ludwigshafen, Germany

Filed Oct. 15, 1976, Ser. No. 732,909

Claims priority, application Germany, Nov. 8, 1975, 2550225

Int. Cl.² C01G *49/02*

U.S. Cl. 423—634 **8 Claims**

1. In a process for the manufacture of acicular γ-iron(III) oxide by reacting an aqueous solution of iron(II) salt with, aqueous solutions of alkali metal hydroxides, oxidizing the resulting suspensions of iron(II) hydroxide with oxygen or oxygen-containing gases to goethite, reducing the resulting goethite to magnetite and oxidizing the magnetite to acicular γ-iron(III) oxide, the improvement comprising: carrying out the oxidation of the iron(II) hydroxide suspension in three stages, wherein in the first stage not more than 8% by weight of the iron(II) present is oxidized over a period of from 0.5 to 4 hours in the first stage, in the second stage from 25 to 55% of the iron(II) originally present in the suspension is oxidized over an additional period of 1.5 to 6 hours by introducing 0.1 to 0.4 mole per hour of oxygen/gram atom of the iron contained in the suspension at the beginning of said second stage and gradually increasing the introduction of oxygen during said second stage up to 0.2 to 0.9 mole per hour of O_2/g atom of iron at the end thereof and in the third stage oxidizing the remaining iron(II) by introducing 1 to 2 moles of oxygen per hour per gram atom of iron contained in the suspension.

4,061,728

THERAPEUTIC COMPOSITION IN SUBSTANTIALLY RIGID BLOCK FORM FOR USE IN CONTROLLING OR PREVENTING BLOAT IN ANIMALS

Clifford Arthur Andrew Graham, Nunawading, and Kevin Lawrence Linehan, Burwood East, both of Australia, assignors to ICI Australia Limited, Melbourne, Australia

Continuation of Ser. No. 489,437, July 17, 1974, Pat. No. 4,005,192. This application Sept. 27, 1976, Ser. No. 726,431

Claims priority, application Australia, July 27, 1973, 4265/73

The portion of the term of this patent subsequent to Jan. 25, 1994, has been disclaimed.

Int. Cl.² A61K *9/00, 31/74, 33/08*

U.S. Cl. 424—14 **5 Claims**

1. A therapeutic composition of matter in the form of a substantially rigid block for use in controlling or preventing bloat in animals, said composition comprising an effective amount of the product obtained by reacting together molasses, magnesium oxide, and a nonionic polyoxyalkylene surface active compound so as to obtain the reaction mixture in substantially rigid form, the surface active compound being one of formula

$$R^1\text{-}O \left(CH_2CH_2\text{-}O \right)_n H$$

wherein R^1 is a linear $C_{9\text{-}18}$alkyl group and *n* lies in the range 10 to 30 inclusive.

4,061,729

PROSTANOIC ACID DERIVATIVES AND THERAPEUTIC COMPOSITIONS

Jacques Martel, Bondy; Jean Buendia, Nogent-sur-Marne, and Michel Vivat, Lagny-sur-Marne, all of France, assignors to Roussel Uclaf, Paris, France

Continuation-in-part of Ser. No. 425,794, Dec. 18, 1973. This application June 17, 1975, Ser. No. 587,558

Claims priority, application France, June 21, 1974, 74.21602; Dec. 27, 1972, 72.46324

Int. Cl.² C07C *177/00;* **A61K** *31/19, 31/215*

U.S. Cl. 424—305 **9 Claims**

1. A compound of the formula

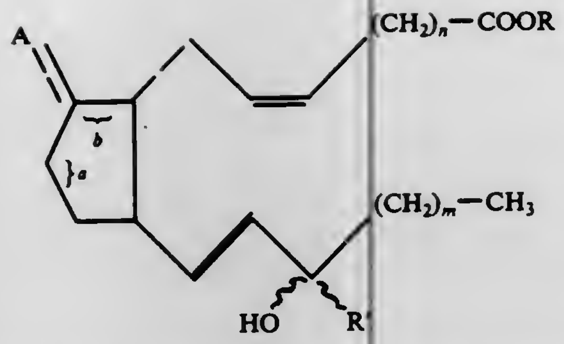

wherein R is a member selected from the group consisting of H, lower alkyl having 1 to 4 carbon atoms and acid salts of pharmaceutically compatible bases, *m* is an integer 3,4 or 5, *n* is an integer 2,3 or 4, R' is a member selected from the group consisting of alkenyl of 2 to 4 carbon atoms and cycloalkenyl of 3 to 6 carbon atoms, A is a member selected from the group consisting of ketonic oxygen and alkoxy of 1 to 4 carbon atoms, one of *a* or *b* being double bond when A is alkoxy, the dotted line to A being a double bond when A is a ketonic oxygen, and the wavy lines represent a paired configuration selected from the group consisting of α,β and β,α and mixtures thereof.

4,061,730
ANTI-SOLAR AGENT AND COMPOSITIONS CONTAINING THE SAME

Gregoire Kalopissis, Paris; Claude Bouillon, Eaubonne, and Charles Vayssie, Aulnay-sous-Bois, all of France, assignors to Societe Anonyme dite: L'Oreal, Paris, France

Continuation of Ser. No. 397,978, Sept. 17, 1973, abandoned. This application Feb. 9, 1976, Ser. No. 656,573

Claims priority, application Luxembourg, Sept. 25, 1972, 66156

Int. Cl.^{2} A61K *7/42;* **C07C** *87/68*

U.S. Cl. 424—59 **13 Claims**

1. A cosmetic composition comprising a solution of
1. a solvent which is water, lower alkanol, lower polyol or an aqueous solution of a lower alkanol
2. an antisolar agent of the formula

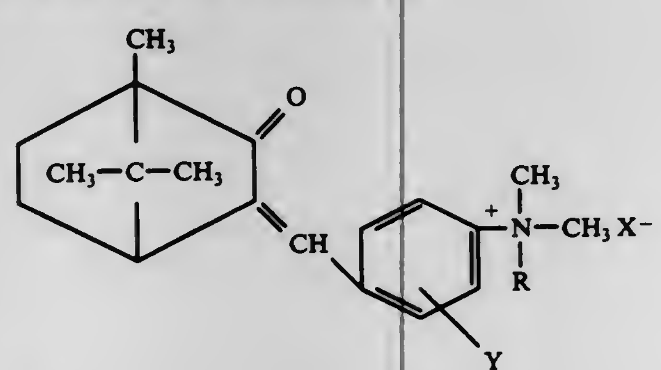

wherein
R is selected from the group consisting of hydrogen and alkyl containing 1-12 carbon atoms;
Y is selected from the group consisting of halogen, methyl and hydrogen; and
X is selected from the group consisting of chloride, p-toluene sulfonate, methyl bromobenzene sulfonate, methane sulfonate, camphosulfonate, methylsulfate and ethylsulfate; wherein said anti-solar agent is present in amounts of about 0.05-10 percent by weight of said composition.

4,061,731
COMPOSITIONS CONTAINING COLLAGEN AND METHODS OF USE FOR REPAIRING DEPRESSED CUTANEOUS SCARS

Sheldon K. Gottlieb, 8708 Wandering Trail Drive, Potomac, Md. 20854

Continuation-in-part of Ser. No. 576,858, June 4, 1975, Pat. No. 4,006,220. This application Jan. 31, 1977, Ser. No. 764,229

Int. Cl.^{2} A61K *35/16, 37/02*

U.S. Cl. 424—101 **18 Claims**

1. A composition useful for the repair of depressed cutaneous scars comprising finely-divided collagen and plasma, said collagen being present in an amount effective to maintain fibrin within a cavity formed under said scar and thereby cause the build-up of new collagen within said cavity and said plasma being present in an amount to provide sufficient fibrin within said cavity.

4,061,732
CONTROL OF LACTIC ACIDOSIS IN RUMINANTS

Larry A. Muir, Flemington, and Albert Barreto, Milltown, both of N.J., assignors to Merck & Co., Inc., Rahway, N.J.

Continuation-in-part of Ser. No. 668,332, March 19, 1976, abandoned, which is a continuation of Ser. No. 527,392, Nov. 26, 1974, abandoned, which is a continuation of Ser. No. 444,991, Feb. 22, 1974, abandoned. This application Nov. 8, 1976, Ser. No. 739,929

Int. Cl.^{2} A61K *35/00*

U.S. Cl. 424—117 **12 Claims**

1. A method for the prevention of lactic acidosis in ruminants and for shortening the period of adaptation of said ruminants to a high energy feed from a low energy roughage feed wherein said low energy roughage feed has an energy content of less than 110 megacalories per 100 kg. of feed and said high energy feed has an energy content of 110 or more megacalories per 100 kg. of feed, which comprises administering to said ruminant said high energy feed and an effective amount of a sulfur-containing peptide antibiotic with a molecular weight in excess of 900.

4,061,733
VETERINARY COMPOSITIONS FOR INDUCING ESTRUS IN ANIMALS AND METHOD

Narayan Vishwanath Gunjikar, Botawala Building, 21, Sitaladevi Temple Road, Bombay, India (400016)

Filed Oct. 15, 1976, Ser. No. 732,778

Int. Cl.^{2} A61K *33/34, 31/135*

U.S. Cl. 424—143 **9 Claims**

1. A veterinary composition for inducing estrus in animals comprising an estrus effective amount of a homogeneous mixture of non-toxic, veterinary acceptable acid addition salts of cis-clomiphene and trans-clomiphene in a weight ratio of approximately 3:2 and a carrier.

4,061,734
METHOD OF THERAPEUTICALLY TREATING WARM BLOODED ANIMALS AND COMPOSITIONS THEREFOR

John Wesley Willard, Rapid City, S. Dak., assignor to CAW Industries, Inc., Rapid City, S. Dak.

Continuation-in-part of Ser. No. 712,158, Aug. 6, 1976, Pat. No. 4,029,770, and Ser. No. 593,712, July 7, 1975, which is a continuation-in-part of Ser. No. 317,097, Dec. 20, 1972, Pat. No. 3,893,943, which is a continuation of Ser. No. 108,198, Jan. 20, 1971, abandoned, said Ser. No. 712,158, is a division of Ser. No. 455,022, March 26, 1974, Pat. No. 3,984,540. This application Oct. 18, 1976, Ser. No. 733,049

Int. Cl.^{2} A61K *33/12, 33/06, 35/78*

U.S. Cl. 424—155 **54 Claims**

1. A therapeutic composition for treating warm blooded animals having damaged or infected tissue which responds to treatment with an antibiotic comprising a therapeutically effective amount of an antibiotic which is therapeutically effective in treating the said damaged or infected tissue, a catalytically effective amount of a catalyst, and a therapeutically effective amount of water soluble catalyst treated lignite;

the said catalyst being prepared by a process comprising
admixing a water soluble alkali metal silicate with an aqueous medium containing a dissolved substance which is a source of calcium ion and a dissolved substance which is a source of magnesium ion;
the aqueous medium containing said dissolved substances in amounts to provide between about 1×10^{-4} and 1×10^{-1} mole per liter each of calcium ion and magnesium ion,
the aqueous medium containing said dissolved substances in amounts to provide a molar ratio of calcium ion to magnesium ion between about 2.0:1.0 and 1.0:2.0,
the alkali metal silicate having an alkali metal oxide to silicon dioxide ratio between about 0.9:1.0 and less than 2.0:1.0 and being admixed with the aqueous medium in an amount of about 0.05-2 moles per liter,
reacting the alkali metal silicate with said dissolved substances providing calcium ion and magnesium ion to produce an aqueous suspension of finely divided particles of the reaction product,
admixing a micelle-forming surfactant with the aqueous medium in an amount to form catalyst micelles comprising said finely divided particles of the reaction product upon agitating the aqueous medium, and
agitating the aqueous medium containing the finely divided particles of the reaction product and surfactant to form said catalyst micelles; and

the said catalyst treated lignite being prepared by a process comprising intimately contacting solid lignite in particulate form with a liquid aqueous medium containing a catalytically effective amount of the said catalyst,

the said particles of the lignite having active sites therein which react with at least one component of the said aqueous medium containing the catalytically effective amount of the catalyst under liquid phase conditions and in the presence of the said catalyst, and

the said particles of the lignite being intimately contacted under liquid phase conditions until the active sites thereof react with at least one component of the said aqueous medium containing the catalytically effective amount of the catalyst and until the lignite is soluble in an aqueous medium.

4,061,735
HAPTOGLOBIN IN AQUEOUS SOLUTION AND PROCESS FOR PREPARING THE SAME

Satoshi Funakoshi, Katano; Takao Omura, Toyonaka, and Takeshi Ohshiro, Osaka, all of Japan, assignors to The Green Cross Corporation, Osaka, Japan

Continuation-in-part of Ser. No. 444,662, Feb. 21, 1974, abandoned. This application Apr. 15, 1976, Ser. No. 677,085

Claims priority, application Japan, Nov. 15, 1973, 48-128605; Nov. 15, 1973, 48-128606

Int. Cl.^{2} A61K *37/02*

U.S. Cl. 424—177 **12 Claims**

1. An aqueous solution of human serum haptoglobin suitable for the therapy of renal disorders derived from massive hemolysis which has less than 10% in hypotensive activity, is highly stable during storage and which has been subjected to heat treatment in the presence of at least one stabilizing agent selected from the group consisting of neutral amino acids, monosaccharides, disaccharides and soluble sugar alcohols, for inactivating hepatitis B virus (HB-Ag).

4,061,736
PHARMACEUTICAL ACCEPTABLE INTRAMOLECULARLY CROSS-LINKED, STROMAL-FREE HEMOGLOBIN

Kent C. Morris, Mountain View; Pieter Bonsen, Los Altos, both of Calif., and Myron B. Laver, Weston, Mass., assignors to Alza Corporation, Palo Alto, Calif.

Continuation-in-part of Ser. No. 553,514, Feb. 2, 1975, Pat. No. 4,001,401, and a continuation-in-part of Ser. No. 554,051, Feb. 2, 1975, Pat. No. 4,001,200. This application Sept. 27, 1976, Ser. No. 727,066

The portion of the term of this patent subsequent to Jan. 4, 1994, has been disclaimed.

Int. Cl.^{2} A61K *37/02;* **C12B** *3/00;* **C07G** *7/00*

U.S. Cl. 424—177 **22 Claims**

1. A pharmaceutical composition useful as a blood substitute and blood plasma expander comprising a therapeutically effective amount of intramolecularly cross-linked, stromal-free deoxyhemoglobin, soluble in aqueous and physiological fluids, capable of reversibly binding a ligand, having a molecular weight of about 64,500, and mixed with a pharmaceutically acceptable carrier.

4,061,737
METHOD FOR STIMULATING RELEASE OF PROLACTIN

Harvey E. Alburn, West Chester; Eric L. Lien, Paoli, and Norman H. Grant, Wynnewood, all of Pa., assignors to American Home Products Corporation, New York, N.Y.

Filed Dec. 27, 1976, Ser. No. 754,795

Int. Cl.^{2} A61K *37/00*

U.S. Cl. 424—177 **3 Claims**

1. A method for stimulating prolactin release in a warm-blooded animal in which such stimulation is desirable which comprises administering to said animal by a parenteral route an effective amount of a pentapeptide of the formula:

H-Tyr-Gly-Gly-Phe-Met-OH

or

H-Tyr-Gly-Gly-Phe-Leu-OH

or a non-toxic pharmacologically acceptable salt thereof.

4,061,738
PROCESS FOR REDUCING PLATELET ADHESIVENESS

Wayne Martin, 1222 Pelham Drive, Fort Wayne, Ind. 46825

Continuation-in-part of Ser. No. 476,337, June 4, 1974, abandoned, which is a continuation of Ser. No. 249,741, May 2, 1972, abandoned, which is a continuation of Ser. No. 98,160, Dec. 14, 1970, abandoned, which is a continuation of Ser. No. 626,101, March 27, 1967, abandoned. This application Dec. 29, 1975, Ser. No. 644,812

Int. Cl.^{2} A61K *35/78*

U.S. Cl. 424—195 **5 Claims**

1. A process for reducing platelet adhesiveness in flowing human blood which comprises orally administering to humans a platelet adhesiveness reducing amount of an edible oil obtained by
pressing flaxseeds at a temperature below about 230° F and in the absence of caustic to obtain a first major portion of flaxseed oil;
adding approximately 3% by weight, based on the weight of the flaxseed oil, of soy phosphatide obtained by centrifuging an oil obtained from soy beans and separating the soy phosphatide from the centrifuged oil;
adding approximately 3% by weight, based on the weight of the flaxseed oil, of a flax phosphatide obtained by centrifuging an oil obtained from flaxseeds and separating the flax phosphatide from the centrifuged oil; and
adding mixed grain and soya tocopherols in an amount of

less than 1% by weight based on the weight of the flaxseed oil.

4,061,739

ISOLATION OF UTERO-EVACUANT SUBSTANCES FROM PLANT EXTRACTS

Ramesh M. Kanojia, Somerville, and Seymour D. Levine, North Brunswick, both of N.J., assignors to Ortho Pharmaceutical Corporation, Raritan, N.J.

Filed July 7, 1976, Ser. No. 703,160

Int. Cl.² A61K *35/78*

U.S. Cl. 424—195 **6 Claims**

1. The method of purifying extracts containing utero-evacuant materials obtained from the zoapatle plant which comprises the steps of:

dissolving the mixture of semi-purified utero-evacuant materials in a water-immiscible organic solvent, chromatographing the resultant solution on alumina, eluting the alumina with a mixture of polar and non-polar organic solvents and collecting the fractions containing utero-evacuant materials.

4,061,740

LIQUID COMPOSITIONS CONTAINING A POLYETHYLENE GLYCOL SAFENER AND AN ORGANOPHOSPHORUS PESTICIDE

Alfonso Boatright, Burlington, N.J., assignor to American Cyanamid Company, Stamford, Conn.

Continuation-in-part of Ser. No. 632,942, Nov. 18, 1975, abandoned. This application Oct. 18, 1976, Ser. No. 733,648

Int. Cl.² A01N *9/36*

U.S. Cl. 424—202 **8 Claims**

1. A composition comprising in combination from 95 to 30%, by weight, of a polyethylene glycol solvent of an average molecular weight of 200 to 600 and from 5 to 70%, by weight, of an agent of the formula:

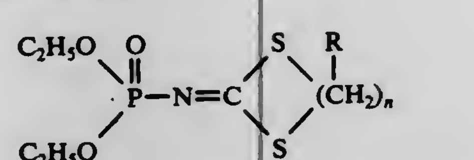

where R is hydrogen or methyl and *n* is an integer from 1 to 2, distinguished by excellent nematocidal and insecticidal activity combined with markedly decreased mammalian dermal toxicity.

4,061,741

PHYSIOLOGICAL SUBSTANCES FOR INTENSIFYING THE PHARMACOLOGICAL EFFECT OF DRUGS

Wolfgang Wawretschek, and Lothar Wawretschek, both of Munich, Germany, assignors to Firma Servomed Arzei GmbH & Co. Pharma KG, Munich, Germany

Filed Mar. 27, 1975, Ser. No. 562,736

Claims priority, application Germany, Apr. 1, 1974, 2415740

Int. Cl.² A61K *31/625, 31/505*

U.S. Cl. 424—232 **41 Claims**

1. A method of treating a patient suffering from pain which comprises enterally or parenterally administering to said patient an enterally or parenterally administrable central nervous system effective analgesic composition selected from the group consisting of: (a) a composition comprising a central nervous system analgesic which exhibits in vivo and in vitro an affinity for blood proteins, and a member selected from the group consisting of orotic acid (1,2,3,6-tetrahydro-2,6-dioxo-4-pyrimidine-carboxylic acid), physiologically compatible orotic acid salts other than with said central nervous system analgesic, and mixtures thereof in an amount sufficient to increase the amount of said analgesic which is ultrafilterable from serum and to increase the analgesic efficiency of said analgesic; (b) composition comprising a physiologically compatible orotic acid salt of a central nervous system analgesic which exhibits in vivo and in vitro an affinity for blood proteins wherein the orotic acid moiety is in an amount sufficient to increase the amount of said analgesic which is ultrafilterable from serum and to increase the analgesic efficiency of said analgesic, and mixtures of (a) and (b).

4,061,742

METHOD OF REDUCING THE UNDESIRABLE GASTROINTESTINAL EFFECTS OF PROSTAGLANDIN SYNTHETASE INHIBITORS WITH PGA COMPOUNDS

André Robert, Kalamazoo, Mich., assignor to The Upjohn Company, Kalamazoo, Mich.

Continuation of Ser. No. 437,444, Jan. 28, 1974, abandoned. This application Aug. 9, 1976, Ser. No. 712,437

Int. Cl.² A61K *31/61, 31/215, 31/19*

U.S. Cl. 424—234 **3 Claims**

1. A method of systemic administration of an anti-inflammatory prostaglandin synthetase inhibitor to a mammal, the improvement which comprises concomitant systemic administration of (a) said inhibitor, and (b) a prostaglandin of the following formula

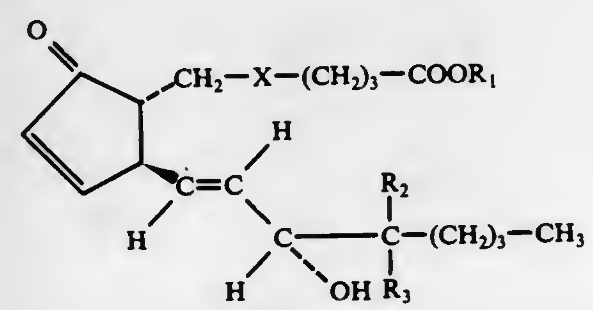

in an amount effective to reduce the gastrointestinal effects of the prostaglandin synthetase inhibitor where R_1 is hydrogen, or alkyl of one to 8 carbon atoms, inclusive, where R_2 is methyl or ethyl, where R_3 is hydrogen, methyl or ethyl, and where X is —CH_2CH2— or cis—CH=CH— or a pharmaceutically acceptable salt thereof when R_1 is hydrogen.

4,061,743

EXHAUST GAS SCRUBBING PROCESS

Teizo Senjo, Machida, and Makio Kobayashi, Toyonaka, both of Japan, assignors to Fuji Kasui Engineering Co., Ltd., Tokyo and Sumitomo Metal Industries, Ltd., Osaka, both of Japan

Filed Apr. 23, 1976, Ser. No. 679,777

Claims priority, application Japan, May 6, 1975, 50-53150; May 6, 1975, 50-53151; Jan. 7, 1976, 51-001200

The portion of the term of this patent subsequent to July 12, 1994, has been disclaimed.

Int. Cl.² C01B *21/00, 17/00*

U.S. Cl. 423—235 **10 Claims**

1. A process for removing nitrogen oxides including nitrogen monoxide and nitrogen dioxide from exhaust gas containing the same comprising the steps of:

a. oxidizing the nitrogen monoxide into nitrogen dioxide, dinitrogen trioxide or a mixture thereof by adding an oxidizing agent to the exhaust gas, and; then,

b. contacting, in a scrubbing column, the gas with an aqueous scrubbing suspension having a pH of not less than 4.5 and containing (i) the sulfite of at least one alkaline earth metal, (ii) not less than 0.03 mol/liter of thiourea or thiosulfate of alkali metals, alkaline earth metals and ammonium or mixtures thereof and (iii) not less than 0.003 mol/-liter of copper ion or iron ion or a mixture thereof, whereby the nitrogen oxides are reduced to nitrogen.

4,061,744

STABLE PREPARATION OF WATER-SOLUBLE SALTS OF DEHYDROEPIANDROSTERONE SULFATE FOR PARENTERAL ADMINISTRATION

Isao Sugimoto, Nara, and Yoko Sawase, Osaka, both of Japan, assignors to Kanebo, Ltd., Tokyo, Japan

Filed Aug. 31, 1976, Ser. No. 719,278

Claims priority, application Japan, Sept. 5, 1975, 50-108197; July 6, 1976, 51-80613

Int. Cl.² A61K *31/56*

U.S. Cl. 424—243 **13 Claims**

1. A method for producing a stable pharmaceutical preparation for parenteral administration which comprises dissolving a water-soluble salt of dehydroepiandrosterone sulfate in an aqueous solution of a stabilizing agent selected from the group consisting of dextran, polyethylene glycol, a neutral or basic naturally occuring amino acid, an alkali metal salt of a weak acid, tris (hydroxymethy) amindethane and mixtures thereof, and lyphilizing the resulting mixture.

4,061,745

AZETO [2,3-b][1,4] BENZO DIAZEPINES

Umakant Devdas Shenoy, London, England, assignor to DDSA Pharmaceuticals Ltd., London, England

Filed May 12, 1975, Ser. No. 576,921

Claims priority, application United Kingdom, May 14, 1974, 21195/74

Int. Cl.² C07D *487/04;* **A61K** *31/55*

U.S. Cl. 424—244 **8 Claims**

1. A compound of the formula

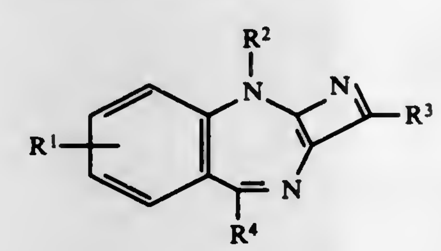

III

wherein R^1 represents hydrogen, chlorine, bromine, fluorine, iodine or nitro; R^2 represents C_1-C_{10}alkyl; R^3 represents lower alkyl group and R^4 represents phenyl; or a pharmaceutically acceptable acid addition product thereof.

2. A therapeutic composition comprising at least one compound of the formula

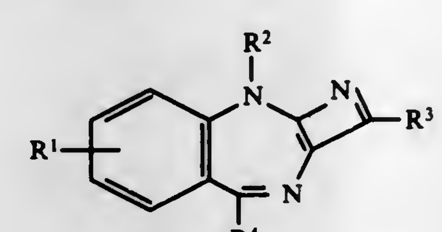

III

wherein R^1 represents hydrogen, chlorine, bromine or nitro; R^2 represents methyl or ethyl; R^3 represents lower alkyl group and R^4 represents phenyl, or a pharmaceutically acceptable acid addition salt thereof in an amount sufficient to provide a tranquilizing, sedative, or hypnotic effect in admixture with a pharmacologically acceptable diluent or carrier.

3. A process for the preparation of a compound according to claim 1 which comprises contacting a compound of the formula

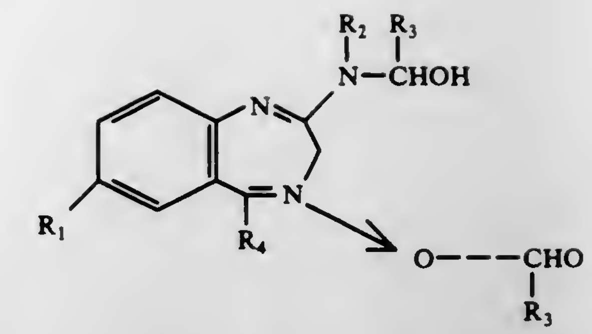

I

wherein R_1, R_2, R_3 and R_4 have the significance ascribed in claim 1 to R^1, R^2, R^3 and R^4, respectively, with an aqueous solution of a strong base.

4,061,746

LACTAMIMIDE INHIBITORS OF GASTROINTESTINAL HYPERSECRETION

Thomas R. Blohm; J. Martin Grisar, and Norbert L. Wiech, all of Cincinnati, Ohio, assignors to Richardson-Merrell Inc., Wilton, Conn.

Filed Apr. 23, 1976, Ser. No. 679,810

Int. Cl.² A61K *31/33, 31/445, 31/38, 31/40*

U.S. Cl. 424—244 **51 Claims**

1. A method of treating gastrointestinal hypersecretion in a patient in need thereof which comprises administering to said patient a gastrointestinal hypersecretion inhibitory effective amount of a compound of the formula

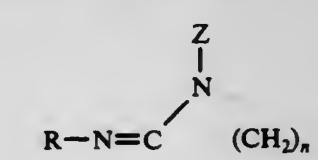

wherein

Z is hydrogen or lower alkyl of from 1 to 4 carbon atoms;

n is an integer of from 5 to 11; and R is a straight or branched alkyl group of from 8 to 15 carbon atoms; or a lower alkoxyalkyl group wherein the alkyl moiety has from 8 to 15 carbon atoms and the alkoxy moiety has from 1 to 4 carbon atoms; a phenylalkylene group wherein the alkylene moiety has from 1 to 6 carbon atoms and wherein the phenyl moiety is unsubstituted or substituted in which case the substituents may be attached at the ortho, meta or para-position of the phenyl ring and are chlorine, fluorine, bromine, lower alkyl having from 1 to 4 carbon atoms, lower alkoxy having from 1 to 4 carbon atoms, or hydroxy;

the group

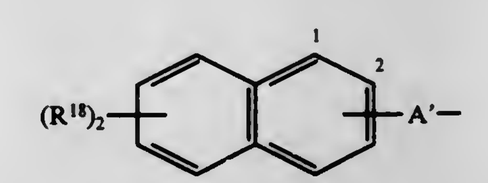

wherein A' is a straight or branched alkylene moiety of from 1 to 6 carbon atoms or benzyl and is attached to either the 1- or 2-position of the naphthalene ring, and R^{18} is hydrogen, chlorine, fluorine, bromine, trifluoromethyl, an alkyl group having from 1 to 12 carbon atoms which is straight or branched, an alkoxy group having from 1 to 3 carbon atoms or NO_2;

1- or 2-adamantyl; 1- or 2-norbornyl;

ortho, meta, or para-biphenylyl;

9-fluorenyl which is unsubstituted or substituted in which case the substituents may be attached to any one of the four available carbon atoms of each aromatic ring and are chlorine, bromine, fluorine, a lower alkyl group having from 1 to 4 carbon atoms, a lower alkoxy group having from 1 to 4 carbon atoms, or NO_2;

dibenzocyclohepten-5-yl;
the group

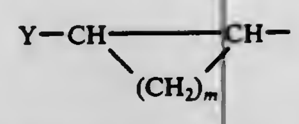

wherein m is an integer of from 1 to 6, and Y is a cycloalkyl group having from 5 to 7 carbon atoms, a phenyl group which is unsubstituted or substituted in which case the substituents may be attached to the ortho, meta, or para-position of the phenyl ring and are chlorine, fluorine, bromine, a lower alkyl group having from 1 to 4 carbon atoms or a lower alkoxy group having from 1 to 4 carbon atoms;
the group

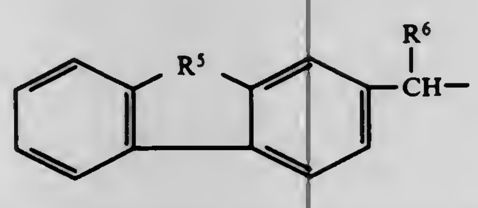

wherein R^2 is phenyl or a cycloalkyl group having from 3 to 6 carbon atoms, and R^3 is hydrogen or methyl;
the group

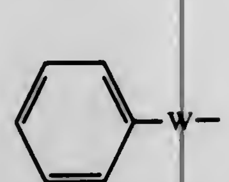

wherein W is a straight or branched divalent alkylene chain having from 2 to 6 carbon atoms which is substituted with one phenyl group on any of the 6 carbon atoms with the proviso that the carbon atom adjacent to the exocyclic nitrogen atom must have at least one hydrogen attached to it;
the group

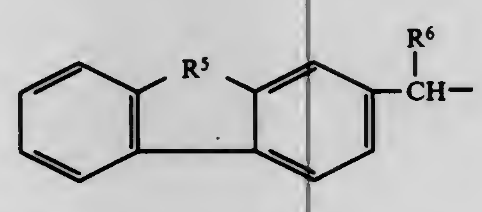

wherein R^5 is —CH_2—, —$2CH_2$— or —CH=CH—, and R^6 is hydrogen or a lower alkyl group of from 1 to 4carbon atoms;
the group

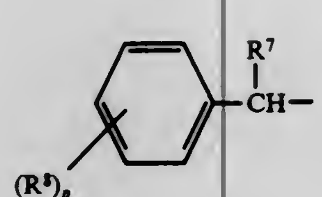

wherein R^7 is cycloalkyl of from 3 to 5 carbon atoms, R^8 is hydrogen, lower alkoxy of from 1 to 4 carbon atoms or lower alkyl of from 1 to 4 carbon atoms, and p is the integer 1 or 2;
the group

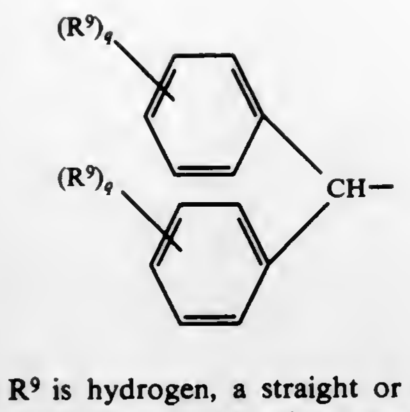

wherein R^9 is hydrogen, a straight or branched lower alkyl group of from 1 to 4 carbon atoms, chlorine, fluorine, bromine, CF_3, SCF_3, OCF_3, phenyl, phenoxy or a lower alkoxy group of from 1 to 4 carbon atoms and q is an integer of from 1 to 3;
the group

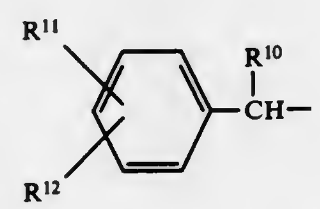

wherein R^{10} is a lower alkyl group of from 1 to 4 carbon atoms, R^{11} is hydrogen or lower alkyl of from 1 to 4 carbon atoms, R^{12} is an alkyl group having from 8 to 14 carbon atoms, an alkoxy group having from 8 to 14 carbon atoms, a cycloalkyl group having from 5 to 14 carbon atoms, phenyl, phenoxy, phenylalkyl wherein the alkyl moiety has from 1 to 4 carbon atoms, phenylalkoxy wherein the alkoxy moiety has from 2 to 4 carbon atoms, 2,2-diphenylvinyl or fluoren-9-ylidene; or
the group

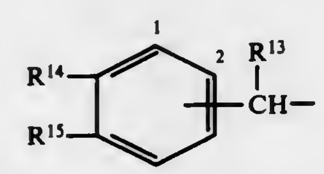

wherein the phenyl moiety is attached to the

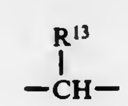

moiety through the 1- or 2-position of the phenyl ring, R^{13} is a lower alkyl group of from 1 to 4 carbon atoms and R^{14} and R^{15} taken together are (—CH_2—$)_3$, —$CH_2CH_2C(CH_3)_2$—, —$(CH_2)_4$— or —$C(CH_3)_2CH_2CH_2C(CH_3)_2$—; with the proviso that when R is the group

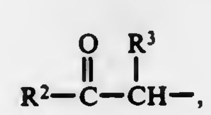

Z is hydrogen; and pharmaceutically acceptable acid addition salts thereof or individual optical or geometric isomers.

4,061,747
ANTIDEPRESSANT COMPOSITION
Edgar Eriksoo, and Korfitz Bengt-Ingvar Ohlsson, both of Helsingborg, Sweden, assignors to Aktiebolaget Leo, Helsingborg, Sweden
Filed June 21, 1976, Ser. No. 697,765
Claims priority, application United Kingdom, July 3, 1975, 28136/75
Int. Cl.² A61K *31/33*
U.S. Cl. 424—244 **7 Claims**

1. Solid antidepressant composition for oral use containing as active ingredient an orally-effective amount of lofepramine hydrochloride, at least ten percent by weight of the composition, a pharmaceutically-acceptable carrier, and a stabilizing amount, at least three percent by weight of the composition, of ascorbic acid.

4,061,748
7-(α-(4-HYDROXY-1,5-NAPHTHYRIDINE-3-CARBONAMIDO)-α-PHENYLACETAMIDO) CEPHALOSPORIN DERIVATIVES
Hirotada Yamada, Nishinomiya; Kosaku Okamura, Takarazuka; Hisao Tobiki, Kobe; Norihiko Tanno, Ashiya; Kozo Shimago, Toyonaka; Takenari Nakagome, Nishinomiya; Toshiaki Komatsu, Takarazuka; Akio Izawa, Kawanishi; Hiroshi Noguchi, Maebashi; Kenji Irie, Takarazuka, and Yasuko Eda, Toyonaka, all of Japan, assignors to Sumitomo Chemical Company, Limited, Osaka, Japan
Filed Apr. 5, 1976, Ser. No. 674,205
Claims priority, application Japan, Apr. 3, 1975, 50-41011
Int. Cl.² A61K *31/545;* **C07D** *501/36*
U.S. Cl. 424—246 **6 Claims**

1. A compound of formula (I):

(I)

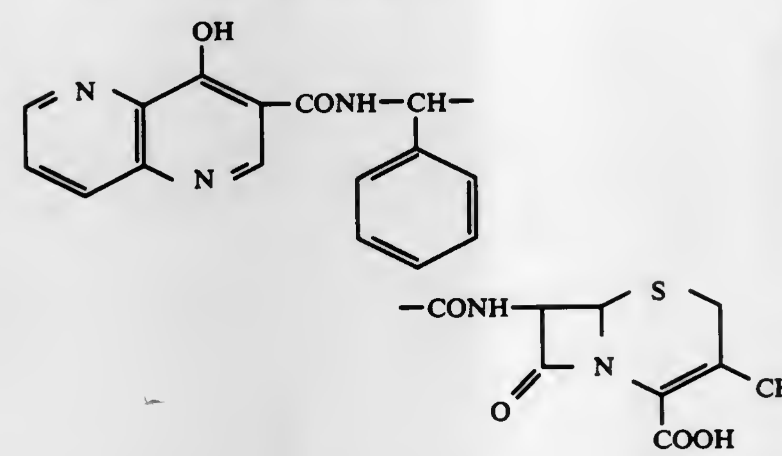

wherein X is an —S-Het group in which Het is a 5- or 6-membered heterocyclic ring containing 1 to 4 hetero atoms selected from the group consisting of nitrogen, oxygen and sulfur atoms which may be substituted with one or more substituents, and the non-toxic, pharmaceutically acceptable salts thereof.

6. An antimicrobial pharmaceutical composition which comprises a therapeutically effective amount of a compound of claim 1 or a non-toxic, pharmaceutically acceptable salt thereof and a pharmaceutically acceptable carrier or diluent.

4,061,749
5,6-DIHYDRO-4H-1,3-THIAZINE-2-CARBOXALDEHYDE OXIME USEFUL AS INSECTICIDES
James E. Powell, Kent, England, assignor to Shell Oil Company, Houston, Tex.
Filed July 6, 1976, Ser. No. 703,043
Int. Cl.² A01N *9/00, 9/12;* **C07D** *279/00, 285/00*
U.S. Cl. 424—246 **5 Claims**

1. The oxime of the formula

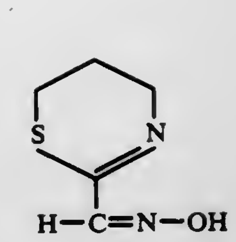

4. A method for killing lepidopterous insects which comprises contacting them with an insecticidally effective amount of the oxime of claim 1.

4,061,750
ANTIMICROBIAL COMPOSITION
Arnold Lada, Monmouth Beach; Alfonso N. Petrocci, Glen Rock, both of N.J.; Harold A. Green, Havertown, Pa., and John J. Merianos, Jersey City, N.J., assignors to Kewannee Industries, Bryn Mawr, Pa.
Filed Sept. 13, 1976, Ser. No. 722,390
Int. Cl.² A01N *9/22, 9/24*
U.S. Cl. 424—249 **6 Claims**

1. An antimicrobial composition consisting essentially of a mixture of α-bromocinnamaldehyde and a condensation product of formaldehyde and ethanolamine wherein the formaldehyde and the ethanolamine are reacted in a molar proportion of about 1:1, the α-bromocinnamaldehyde and the condensation product being in a proportion, in parts by weight, of about 1:7 to about 1:9.

4,061,751
6-SUBSTITUTED 3-NITROIMIDAZO[1,2-b]PYRIDAZINE FOR THE CONTROL OF FOOT ROT AND LIVER LESIONS IN RUMINANT ANIMALS
Alberto Eilert Adam, Wayne, N.J., assignor to American Cyanamid Company, Stamford, Conn.
Filed July 22, 1976, Ser. No. 707,921
Int. Cl.² A61K *31/50, 31/54, 31/535*
U.S. Cl. 424—250 **7 Claims**

1. A method of treating foot rot and liver abscesses in ruminant animals which comprises, administering to the animals a therapeutically effective amount of a compound having the formula:

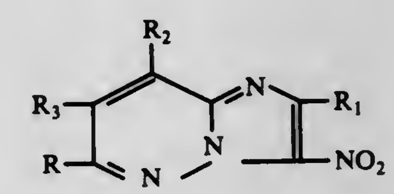

wherein R is hydroxy, mercapto, alkoxy (C_1–C_8), alkylthio (C_1–C_8), phthalimidoloweralkoxy, phenylloweralkoxy, lower alkylaminoloweralkoxy, lower alkoxyloweralkoxy, hydroxyloweralkoxy, lower alkenyloxy, halobenzoylloweralkoxy, amino, alkyl (C_1–C_8) amino, dialkyl (C_1–C_8) amino, di(hydroxyloweralkyl)amino, hydroxyloweralkylamino, lower alkoxyloweralkylamino, lower alkenylamino, phenylloweralkylamino, pyridylloweralkylamino, cycloalkyl (C_3–C_6) amino, diloweralkylaminoloweralkylamino, 1-piperidinyl, 1-pyrrolidinyl, 4-loweralkyl-1-piperazinyl, 4-lower alkoxyphenyl-1-piperazinyl, morpholino, imidazolyl, 4-carboloweralkoxy-1piperazinyl or 4-diloweraminoloweralkyl-1-piperazinyl, sulfanilamido, alkyl (C_1–C_4)-sulfanilamido; thiomorpholino-S,S-dioxide; p-chlorobenzoyl hydrazido; p-chlorobenzylidene hydrazino; nicotinylidene hydrazino loweralkylthioloweralkoxy and loweralkylsulfonyloweralkoxy or —NR_4—CO—R_5 where R_4 is hydrogen or alkyl C_1–C_4 and R_5 is alkyl C_1–C_{11}, phenyl, 3,4-dichlorophenyl, 4-chloro-3-nitrophenyl, benzyl, mono and dihaloalkyl C_1–C_4 or 2-phenoxypropionamide; R_1 is hydrogen or alkyl C_1–C_4; R_2 and R_3 are hydrogen or methyl; and the pharmaceutically acceptable acid addition salts thereof.

4,061,752
6-PIPERAZINO-11-METHYLENE-DIBEN-ZAZEPINES[b,E]
Franz Martin Künzle, Bern, Switzerland, assignor to Sandoz Ltd., Basel, Switzerland
Filed July 30, 1976, Ser. No. 710,122
Claims priority, application Switzerland, Aug. 6, 1975, 10247/75; Sept. 11, 1975, 11810/75; Jan. 13, 1976, 319/76
Int. Cl.[2] A61K *31/495;* C07D *403/04*
U.S. Cl. 424—250 **12 Claims**

1. A compound of formula I,

I

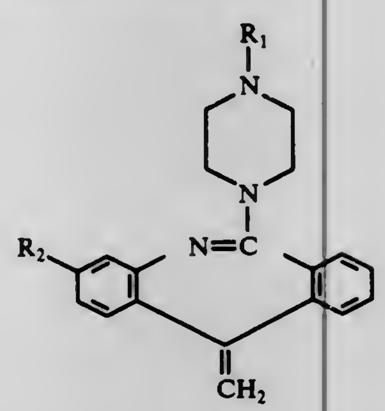

wherein
R_1 is hydrogen, alkyl of 1 to 4 carbon atoms, or hydroxyalkyl of 1 to 4 carbon atoms, and
R_2 is hydrogen or halogen,
in free base form or in pharmaceutically acceptable acid addition salt form.

10. A pharmaceutical composition comprising a compound of claim 1 in association with a pharmaceutical carrier or diluent.

4,061,753
TREATING PSORIASIS WITH TRANSIENT PRO-DRUG FORMS OF XANTHINE DERIVATIVES
Nicolae S. Bodor, Lawrence, and Kenneth B. Sloan, Eudora, both of Kans., assignors to INTERx Research Corporation, Lawrence, Kans.
Filed Feb. 6, 1976, Ser. No. 655,786
Int. Cl.[2] A61K *31/52*
U.S. Cl. 424—253 **99 Claims**

1. A method for topically treating psoriasis on a warm-blooded animal afflicted with the same which comprises topically administering thereto an anti-psoriatic effective amount of a compound having the formula:

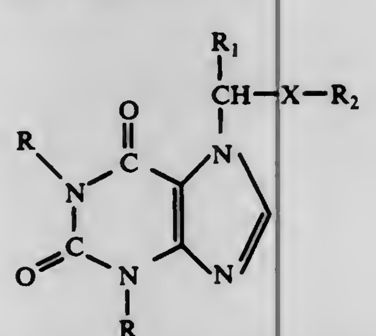

wherein R, which may be the same or different, represents a member selected from the group consisting of $-CH_3$, $-C_2H_5$, iso$-C_3H_7$, $-C_4H_9$, iso$-C_4H_9$, pentyl, benzyl, allyl, 2-hydroxyethyl, cyclohexyl, 2-isobutenyl, hydroxymethyl, 2-phenylethyl and $-CH_2O-R_2$, wherein R_2 is defined infra; wherein R_1 represents a member selected from the group consisting of H, C_1–C_7 straight or branched alky, CCl_3, CBr_3, CI_3,

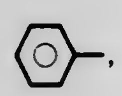

CH_3O-CH_2-, $(CH_3)_2NCH_2-$, $-CHO$,

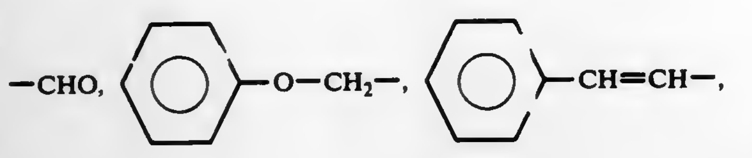

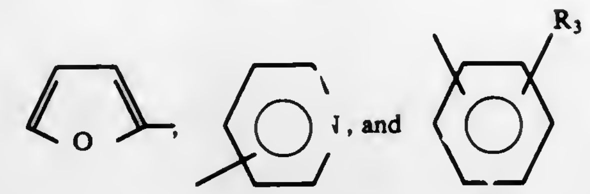

wherein R_3 represents a member selected from the group consisting of —OH, halogen, $-OCH_3$, $-COOCH_3$, $-NO_2$ and $-OCOCH_3$; wherein X is

$$-O-,\ -S-,\ \text{or}\ -\overset{R_1}{\overset{|}{N}}-;$$

and wherein R_2 represents a member selected from the group consisting of

$$-\overset{O}{\overset{\|}{C}}-R_4,$$

wherein R_4 is a member selected from the group consisting of C_2–C_{20} straight or branched alkyl,

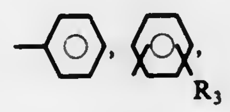

wherein R_3 is defined as above,

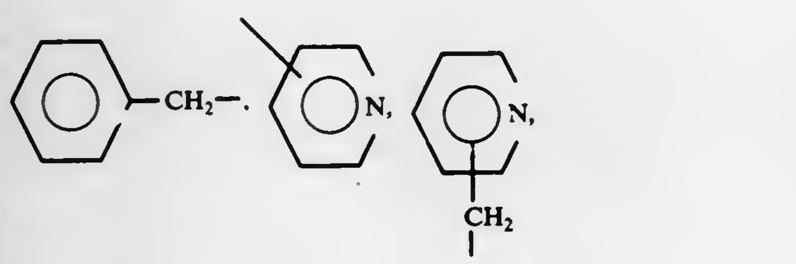

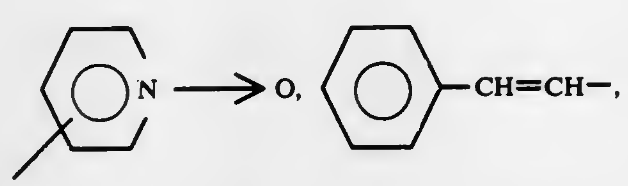

the residue of any naturally occurring amino acid, the residue of any N— substituted amino acid, wherein said substituent is any amino acid protective group cleavable via hydrogenolysis or hydrolysis the residue of an N,N—C_1—C_5—dialkyl or cycloalkylamino acid,

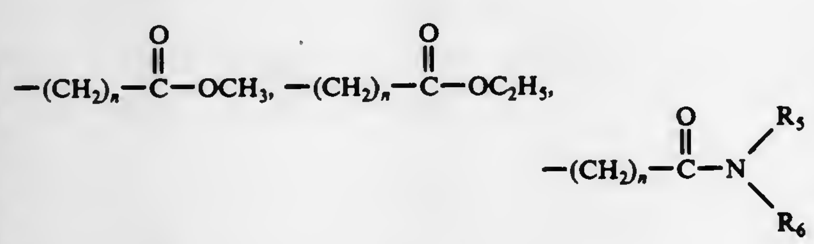

wherein *n* represents an integer of from 1-5 and R_5 and R_6 which may be the same or different represent C_1-C_5 alkyl or together form a heterocyclic ring with the N atom to which they are attached, imidazolyl, O—C_1—C_8 alkyl, O-benzyl, O-phenyl and

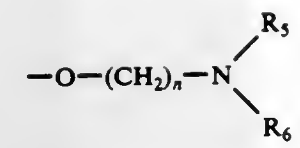

wherein *n*, R_5 and R_6 are defined as above; and wherein R_2 further represents a member selected from the group consisting of straight or branched C_1-C_{20} alkyl,

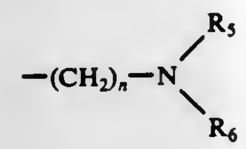

wherein *n*, R_5 and R_6 are defined as above, phenyl, tolyl, xylyl, and $-SO_2-R_7$, wherein R_7 is a straight or branched C_1-C_{20} alkyl.

4,061,754
IMIDAZO[1,2-a]QUINOLINES
Robin Michael Black, Porton, England, assignor to John Wyeth & Brother Limited, Maidenhead, England
Filed Jan. 7, 1976, Ser. No. 647,279
Claims priority, application United Kingdom, Jan. 16, 1975, 1933/75
Int. Cl.[2] A61K *31/475;* C07D *235/02*
U.S. Cl. 424—258 **5 Claims**

1. An imidazo[1,2-a]quinoline selected from the group consisting of compounds having the formula (I)

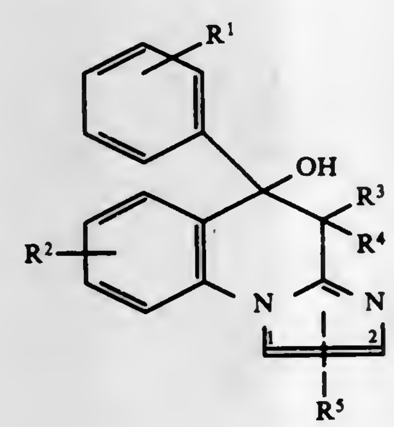

and the pharmaceutically acceptable acid addition salts thereof, wherein R^1 and R^2 which may be the same or different each represent hydrogen, lower alkyl, lower alkoxy, trifluoromethyl or halogen, R^3 and R^4 which may be the same or different each represent lower alkyl and R^5 represents hydrogen, lower alkyl, phenyl, phenyl substituted by R^1 or phenyllower-alkyl, with the proviso that R^3 and R^4 cannot be groups which give rise to steric hindrance.

5. A hypotensive composition comprising a hypotensively effective amount of an imidazol[1,2-a]quinoline selected from the group consisting of compounds having the formula (I) and the pharmaceutically acceptable acid addition salts thereof, wherein R^1 and R^2 which may be the same or different each represent hydrogen, lower alkyl, lower alkoxy, trifluoromethyl or halogen, R^3 and R^4 which may be the same or differnt each represent lower alkyl and R^5 represents hydrogen, lower alkyl, phenyl, phenyl substituted by R^1 or phenyllower-alkyl, with the proviso that R^3 and R^4 cannot be groups which give rise to steric hindrance in association with a pharmaceutically acceptable carrier.

4,061,755
COCCIDIOCIDAL COMBINATION OF MONENSIN AND METICHLORPINDOL
Larry R. McDougald, Greenfield, Ind., assignor to Eli Lilly and Company, Indianapolis, Ind.
Filed Mar. 25, 1976, Ser. No. 670,485
Int. Cl.[2] A01N *9/02;* A61K *31/44*
U.S. Cl. 424—263 **5 Claims**

1. A coccidiocidal composition for poultry comprising coccidiocidally-ineffective concentrations of monensin and of metichlorpindol, which coccidiocides are synergistically coccidiocidally effective in combination, together with a poultry feedstuff or drinking water, wherein the concentrations are from about 35 to 65 ppm. of monensin and from about 20 to about 70 ppm. of metichlorpindol, which concentrations are such that the combination is synergistic.

4,061,756
METHODS FOR TREATING CARDIOVASCULAR DISORDERS
Stephen G. Hastings, Chelsea; Bruno P. H. Poschel, and Donald E. Butler, both of Ann Arbor, all of Mich., assignors to Parke, Davis & Company, Detroit, Mich.
Filed Dec. 17, 1976, Ser. No. 751,829
Int. Cl.[2] A61K *31/44*
U.S. Cl. 424—263 **5 Claims**

1. A method for treating cardiovascular disorders in a mammal which comprises administering an effective amount of 3-phenoxypyridine or a pharmaceutically acceptable acid-addition salt thereof to a mammal suffering from cardiovascular disorders.

4,061,757
COMPOUNDS HAVING JUVENILE HORMONE ACTIVITY
Hans Berg Madsen, Bovlingbjerg; Preben Lindholm Holst, and Houk Solli, both of Harboor, all of Denmark, assignors to A/S Cheminova, Lemvig, Denmark
Continuation-in-part of Ser. No. 435,057, Jan. 15, 1974, abandoned, which is a continuation-in-part of Ser. No. 292,375, Sept. 26, 1972, abandoned. This application Sept. 23, 1975, Ser. No. 615,960
Claims priority, application United Kingdom, Sept. 27, 1971, 44884/71; Denmark, Jan. 24, 1973, 386/73
Int. Cl.[2] C07D *213/30;* A61K *31/44*
U.S. Cl. 424—263 **32 Claims**

1. A chemical compound corresponding to the formula

I

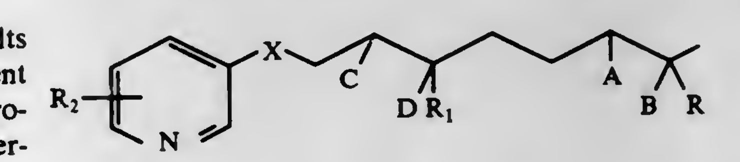

in which A and B, when taken together, represent a further single bond between the adjacent carbon atoms, or an oxygen bridge, or, when taken individually, A represents a hydrogen atom, and B represents a lower alkyl group, a lower alkoxy group or a hydroxy group, C and D, when taken together, represent a further single bond, or, when taken individually C and D each represent a hydrogen atom, R and R_1 each represent a methyl or ethyl group, R_2 represents a hydrogen atom or at least one substituent selected from the group consisting of halogen atoms, lower alkyl, lower alkoxy and nitro groups, and X is 0.

5. A composition for the control of insects which comprises an inert carrier and a compound as claimed in claim 1, the composition containing said compound in an amount effective to inhibit the metamorphosis of insects.

4,061,758

TREATING HYPERTENSION AND CENTRAL NERVOUS SYSTEM ABNORMALITIES

John Leheup Archibald, Windsor, England, assignor to John Wyeth & Brother Limited, Maidenhead, England

Continuation-in-part of Ser. No. 569,242, April 18, 1975, Pat. No. 4,024,147, which is a continuation-in-part of Ser. No. 373,046, June 25, 1973, abandoned. This application Feb. 24, 1977, Ser. No. 771,591

Claims priority, application United Kingdom, June 30, 1972, 30636/72

Int. Cl.² A61K *31/44*

U.S. Cl. 424—263 **3 Claims**

1. A pharmaceutical composition having hypotensive activity or central nervous system activity comprising a carrier and an effective amount of a compound selected from those of the formula

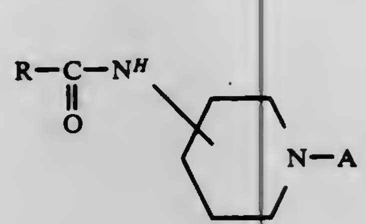

and their pharmaceutically acceptable acid addition salts, wherein A represents a member selected from the class consisting of

i. alkyl containing 2 to 3 carbon atoms monosubstituted by a substituent selected from hydroxyl, di(lower alkyl) amino, cyano, halogen, groups of the formula —CO.NX.Y where X and Y are selected from hydrogen and lower alkyl, groups of the formula —CO.T where T is lower alkyl, the semicarbazone and phenylhydrazone derivatives of said groups of formula —CO.T, (Lower alkoxy) carbonyl and groups of the formula $—N(CH_2R^1)R^2$ where R^1 is selected from phenyl, monohalophenyl, mono(lower alkyl) phenyl and mono(lower alkoxy) phenyl and R^2 is pyridyl; and

ii. di(lower alkyl) amino (lower alkoxy) carbonyl; and R represents a member selected from the class consisting of phenyl and phenyl substituted by one to two substituents selected from lower alkyl, halogen and nitro.

4,061,759

ETHENYL AND ETHYNYL MERCAPTOALKYL PYRIDINES

Tsung-Ying Shen, Westfield; Howard Jones, Holmdel, and Conrad P. Dorn, Plainfield, all of N.J., assignors to Merck & Co., Inc., Rahway, N.J.

Division of Ser. No. 578,692, May 19, 1975, abandoned, which is a continuation-in-part of Ser. No. 464,011, April 26, 1974, abandoned, which is a continuation-in-part of Ser. No. 368,772, June 15, 1973, abandoned. This application July 16, 1976, Ser. No. 706,033

Int. Cl.² C07D *213/32;* A61K *31/44*

U.S. Cl. 424—263 **21 Claims**

1. A compound of structural formula:

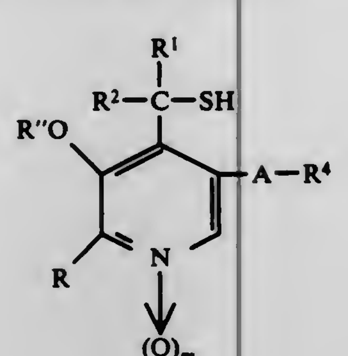

or pharmaceutically acceptable salt thereof wherein
m is 0 or 1;
R″ is H or C_{2-6} alkanoyl;
A is

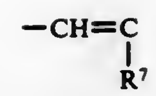

or —C≡C—
where R^7 is hydrogen, chloro or fluoro;
R is C_{1-3} alkyl, hydroxy, C_{2-6} alkanoyloxy, or hydroxy - C_{1-3} alkyl;
R^1 and R^2 are hydrogen or C_{1-3} alkyl; and
R^4 is hydrogen, C_{1-3} alkyl, phenyl, chloro, fluoro, or carboxyl.

15. A method of treating rheumatoid arthritis which comprises the administration, to a warm-blooded animal or human in need of such treatment, an effective amount of a compound of structural formula:

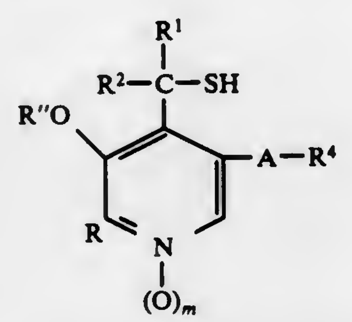

or pharmaceutically acceptable salt thereof wherein
m is 0 or 1;
R″ is H or C_{2-6} alkanoyl;
A is

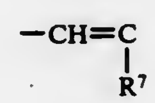

or — C≡C—
where R^7 is hydrogen, chloro or fluoro;
R is C_{1-3} alkyl, hydroxy, C_{2-6} alkanoyloxy, or hydroxy - C_{1-3} alkyl;
R^1 and R^2 are hydrogen as C_{1-3} alkyl; and
R^4 is hydrogen, C_{1-3} alkyl, phenyl, chloro, fluoro, or carboxyl.

4,061,760

METHOD FOR USING 3-SUBSTITUTED-5-PHENYL-5-PYRIDYL HYDANTOINS AS ANTIARRHYTHMIC AGENTS

Herbert John Havera, Edwardsburg, Mich., and Wallace Glenn Strycker, Goshen, Ind., assignors to Miles Laboratories, Inc., Elkhart, Ind.

Division of Ser. No. 664,920, March 8, 1976, Pat. No. 3,994,904. This application Oct. 4, 1976, Ser. No. 729,164

Int. Cl.² A61K *31/445*

U.S. Cl. 424—267 **10 Claims**

1. In a therapeutic method of treating a cardiac arrhythmia in an individual in whom such therapy is indicated by administration of an antiarrhythmic agent, the improvement comprising:

administering to the individual an effective antiarrhythmic amount of a compound having the formula,

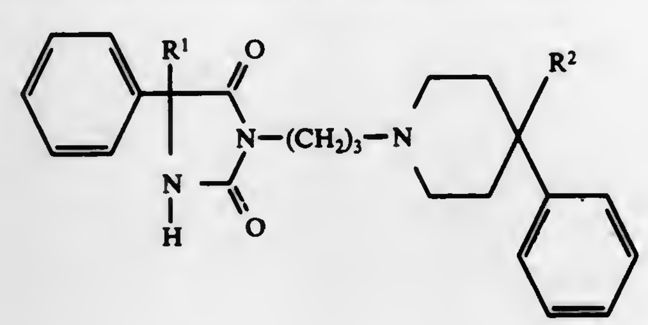

or a pharmacologically acceptable, non-toxic salt thereof, in which:
R^1 is selected from the group consisting of 2-pyridyl, 3-pyridyl, or 4-pyridyl radicals; and
R^2 is selected from the group consisting of a hydrogen atom or a hydroxyl group.

4,061,761

THIAZOLIDINE DERIVATIVES

Hans-Jochen Lang, Altenhain, Taunus, and Roman Muschaweck, Frankfurt am Main, both of Germany, assignors to Hoechst Aktiengesellschaft, Frankfurt am Main, Germany

Filed July 25, 1975, Ser. No. 599,103

Claims priority, application Germany, July 27, 1974, 2436263

Int. Cl.² A61K *31/425;* C07D *277/08*

U.S. Cl. 424—270 **12 Claims**

1. A thiazolidine derivative of the formula

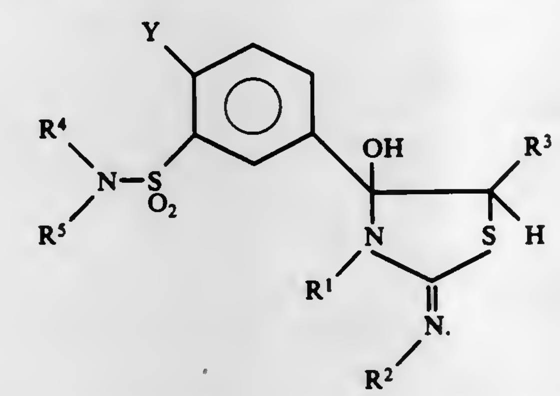

and acid addition salts thereof with a pharmaceutically acceptable acid, wherein R^1 is alkyl or alkenyl having 1 to 4 carbon atoms, cycloalkyl having 3 to 6 carbon atoms, or dialkylamino having a total of up to 7 carbon atoms; R^2 is alkyl, alkenyl, or alkinyl having 1 to 8 carbon atoms which may optionally be substituted by alkoxy having 1 to 4 carbon atoms, or R^2 is cycloalkyl having 3 to 8 carbon atoms, or R^2 is phenylalkyl having 1 to 2 carbon atoms in the alkyl moiety which may optionally be substituted in the phenyl ring by halogen, lower alkyl, alkoxy, or alkylenedioxy, or R^2 is alkyl having 1 to 2 carbon atoms substituted by cycloalkyl having 3 to 6 carbon atoms, or R^2 is dialkylamino having up to a total of 7 carbon atoms; R^3 is hydrogen or alkyl having 1 to 2 carbon atoms; R^4 and R^5 are identical or different and each is hydrogen, alkyl or alkenyl having 1 to 6 carbon atoms which may optionally be substituted by alkoxy having 1 to 4 carbon atoms, or R^4 and R^5 each is cycloalkyl or cycloalkylalkyl having 3 to 9 carbon atoms, phenyl, or phenylalkyl having 1 to 3 carbon atoms in the alkyl moiety, the phenyl ring of which may optionally be substituted by halogen, lower alkyl, alkoxy, or alkylenedioxy; and Y is hydrogen, halogen, methyl or trifluoromethyl.

4,061,762

NAPHTH-[2,1-d]-ISOTHIAZOLE AND NEMATOCIDAL USES THEREOF

Heinrich Adolphi, Limburgerhof; Helmut Fleig, Mannheim, and Helmut Hagen, Frankenthal, all of Germany, assignors to BASF Aktiengesellschaft, Ludwigshafen (Rhine), Germany

Filed July 12, 1976, Ser. No. 704,561

Int. Cl.² C07D *265/04;* A61K *31/425*

U.S. Cl. 424—270 **2 Claims**

1. Naphth-[2,1-d]-isothiazole of the formula

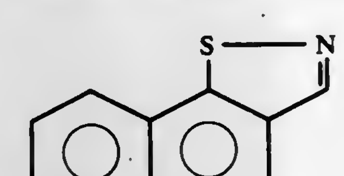

2. A process for combatting nematodes, wherein the soil in which the nematodes live is treated with a nematode-toxic amount of naphth-[2,1-d]-isothiazole.

4,061,763

TRICYCLICDICARBOXIMIDES

Kenneth L. Shepard, Ambler, and William J. Paleveda, Jr., Lansdale, both of Pa., assignors to Merck & Co., Inc., Rahway, N.J.

Division of Ser. No. 575,918, May 9, 1975, Pat. No. 4,006,233, which is a continuation-in-part of Ser. No. 511,961, Oct. 4, 1974, abandoned. This application Aug. 12, 1976, Ser. No. 713,765

Int. Cl.² C07D *403/04, 209/04;* A61K *31/40*

U.S. Cl. 424—274 **4 Claims**

1. A compound having the formula:

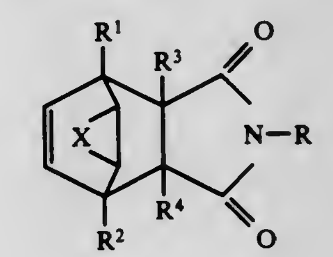

I

wherein:
R^1, R^2, R^3 and R^4 are hydrogen,
X is $—CH_2—$ or —CH=CH—;
R is $—CH_2C≡CH$ or

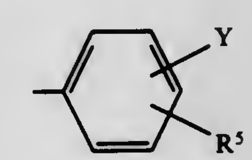

wherein Y is hydrogen, or halogen and R^5 is amino, acetamido, propionamido or valeramido; or a non-toxic pharmaceutically acceptable salt thereof.

3. A pharmaceutical composition for treating anxiety comprising a therapeutically effective amount in unitary dosage form of a compound having the formula:

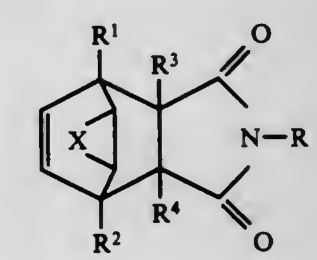

wherein:
R^1, R^2, R^3 and R^4 are hydrogen;
X is $—CH_2—$ or —CH=CH—;
R is $—CH_2C≡CH$ or

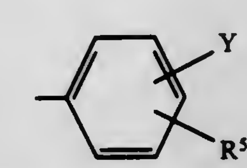

wherein Y is hydrogen, or halogen; and R^5 is amino, acetamido, propionamido or valeramido; or a non-toxic pharmaceutically acceptable salt thereof and a pharmaceutical carrier therefor.

4,061,764

CERTAIN O-SUBSTITUTED THIOPHENE OXIME CARBAMATES USED AS ANTIBACTERIAL AND ANTIFUNGAL AGENTS

Aldo Joseph Crovetti, Lake Forest, Ill., and Robert George Stein, Kenosha, Wis., assignors to Abbott Laboratories, North Chicago, Ill.

Continuation-in-part of Ser. No. 385,020, Aug. 2, 1972, abandoned, which is a continuation-in-part of Ser. No. 201,184, Nov. 22, 1971, abandoned. This application May 19, 1975, Ser. No. 578,792

Int. Cl.² A01N *9/12*

U.S. Cl. 424—275 **7 Claims**

1. A method of inhibiting the growth of microorganisms selected from the group consisting of fungi and bacteria, which method comprises applying to said microorganisms an amount to inhibit the growth of said microorganisms of a compound of the formula:

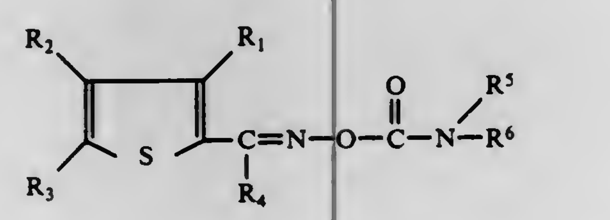

wherein R_1 is hydrogen; R_2 is hydrogen or NO_2; R_3 is hydrogen, NO_2, halo or CH_3; R_4 is CH_3, C_2H_5, CF_3, CH_3S-cyano or

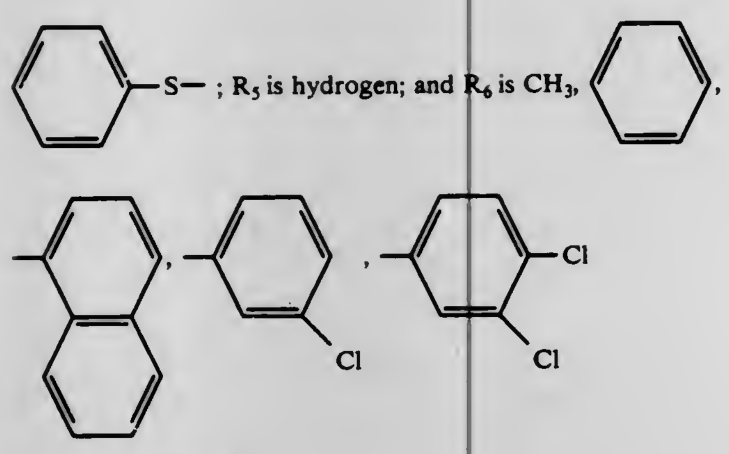

; R_5 is hydrogen; and R_4 is CH_3,

or $-CH_2CH=CH_2$

4,061,765

POLYHYDROXYPHENYLCHROMANONE SALTS AND THERAPEUTIC COMPOSITION

Rolf Hermann Heinrich Madaus, Cologne-Bruck; Gunter Halbach, Cologne, and Wilfried Trost, Bensberg-Frankenforst, all of Germany, assignors to Dr. Madaus & Co., Cologne, Germany

Division of Ser. No. 435,367, Jan. 21, 1974, Pat. No. 3,994,925. This application July 29, 1976, Ser. No. 709,734

Claims priority, application Germany, Jan. 19, 1973, 2302593

Int. Cl.² A61K *31/335*

U.S. Cl. 424—278 **23 Claims**

3. Method of treating a subject suffering from liver damage or inflammation, which comprises administering to said subject in therapeutically effective amounts a salt of a Silymarin group polyhydroxyphenylchromanone with a pharmaceutically acceptable monoamino polyhydroxy alcohol of the formula.

$$HO-CH_2-(CH-OH)_x-CH_2-N(R_1)(R_1)$$

wherein X is an integer from 3 to 5; and R_1 and R_2 are hydrogen, lower alkyl or lower hydroxyalkyl.

4,061,766

CYCLOPENTANE DERIVATIVES AND PROCESS FOR PREPARING THEM

Wilhelm Bartmann, Neuenhain, Taunus; Rudolf Kunstmann, Breckenheim, Taunus; Ulrich Lerch, Hofheim, Taunus, and Bernward Schölkens, Kelkheim, Taunus, all of Germany, assignors to Hoechst Aktiengesellschaft, Frankfurt am Main, Germany

Filed Oct. 28, 1976, Ser. No. 736,526

Claims priority, application Germany, Oct. 31, 1975, 2548814

Int. Cl.² A61K *31/34;* **C07C** *177/00*

U.S. Cl. 424—279 **4 Claims**

1. A compound of the formula

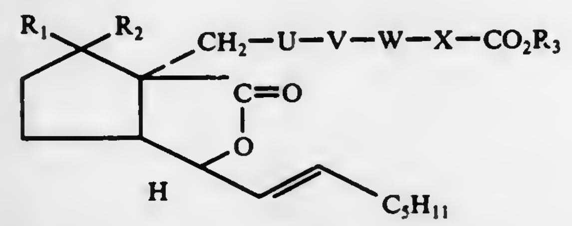

and the physiologically tolerable metal and amine salts thereof, wherein

R_1 and R_2, taken together, are oxygen;

R_1 and R_2, taken separately, are each hydrogen or hydroxy but R_1 and R_2 are different;

R_3 is hydrogen or alkyl having 1 to 5 carbon atoms;

U is $-(CH_2)_m-$, where

m is 0 to 5, or is

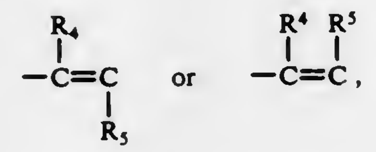

where R_4 and R_5 are the same or different and are hydrogen or alkyl having 1 to 5 carbon atoms;

V is a single bond, oxygen,

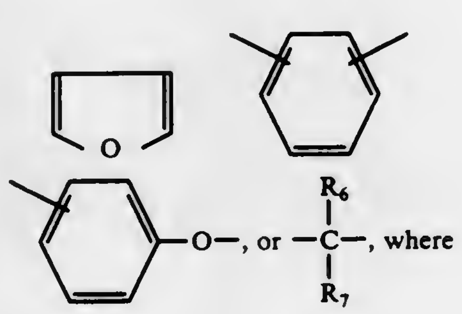

R_6 and R_7 are the same or different and are hydrogen or alkyl having 1 to 5 carbon atoms;

W is a single bond or

$-C(R_8)(R_9)-$, where R_8 and R_9

where R_8 and R_9 are the same or different and are hydrogen or alkyl having 1 to 5 carbon atoms; and

X is $-(CH_2)_m-$,

where *m* is 0 to 5.

3. A pharmaceutical composition useful as a prostaglandin antagonist, said composition comprising a pharmaceutically acceptable carrier and, as the active ingredient, a compound or salt as in claim 1 in an amount producing an antiprostaglandin effect.

4,061,767

CYANO ACETIC ACID ANILIDE DERIVATIVES, PROCESS FOR THEIR MANUFACTURE AND COMPOSITIONS CONTAINING THESE COMPOUNDS

Hartmut Ertel; Günther Heubach, both of Kelkheim, Taunus, and Erhard Wolf, Hofheim, Taunus, all of Germany, assignors to Hoechst Aktiengesellschaft, Frankfurt am Main, Germany

Filed June 3, 1976, Ser. No. 692,318

Claims priority, application Germany, June 5, 1975, 2524929

Int. Cl.² A61K *31/36, 31/275;* **C07C** *121/78;* **C07D** *17/06*

U.S. Cl. 424—282 **8 Claims**

1. A 2-hydroxyethylidene-cyano acetic acid aniline of the formula

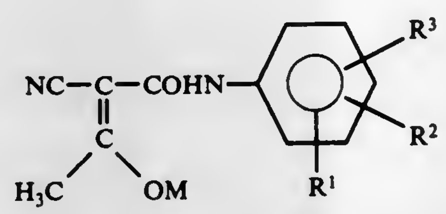

wherein each of R^1, R^2 and R^3, is alkyl of from 1 to 3 carbon atoms, alkoxy of from 1 to 3 carbon atoms, alkylthio of from 1 to 3 carbon atoms; said alkyl, alkoxy or alkylthio substituted in the alkyl moiety by halogen; halogen; nitro; cyano or alkoxycarbonyl of 1 to 3 carbon atoms in the alkyl moiety; also wherein either or both of R^1 and R^2 are hydrogen, and R^3 additionally is phenyl; phenyl substituted by one or two fluorine, chlorine, bromine or iodine atoms, alkyl of from 1 to 3 carbon atoms or alkoxy of from 1 to 3 carbon atoms; phenoxy; or phenoxy substituted by one or two fluorine, chlorine, bromine or iodine atoms, alkyl of from 1 to 3 carbon atoms or alkoxy of from 1 to 3 carbon atoms; but R^3 is not methyl when both R^1 and R^2 are hydrogen; or R^1 is hydrogen, and R^2 and R^3 together are methylene-dioxy or, together with the phenyl ring to which they are linked, naphthalene; and M is hydrogen, an alkali metal or ammonium.

5. A process for the manufacture of a compound as defined in claim 1, which comprises treating an isoxazole of the formula

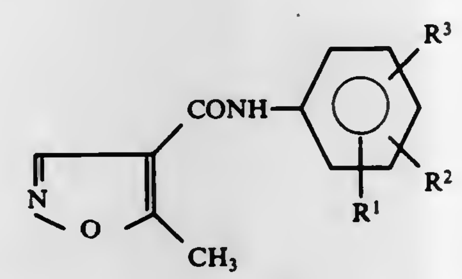

wherein R^1, R^2 and R^3 have the meaning assigned in claim 1, with a base and optionally reacting the resulting alkali metal or ammonium compound as defined in claim 1 with a mineral acid or a strong organic acid.

8. A method of combatting pains and/or inflammations which comprises administering to a patient an effective amount of a compound as defined in claim 1.

4,061,768

CERTAIN CYCLIC CARBONYL COMPOUNDS USED IN THE PROPHYLAXIS OF ALLERGIC CONDITIONS

John Henry Gorvin, London, England, assignor to Burroughs Wellcome Co., N.C.

Division of Ser. No. 338,578, March 6, 1973, Pat. No. 3,950,342, which is a continuation of Ser. No. 287,043, July 9, 1972, abandoned. This application Dec. 19, 1975, Ser. No. 642,662

Claims priority, application United Kingdom, Feb. 24, 1972, 8609/72; Feb. 24, 1972, 8610/72; Aug. 29, 1972, 39940/72; Aug. 29, 1972, 40079/72; Sept. 8, 1971, 41852/71

Int. Cl.² A61K *31/35;* **C07D** *311/00*

U.S. Cl. 424—283 **24 Claims**

1. A method of inhibiting the symptoms of asthma or allergic rhinitis in a mammal susceptible to asthma or allergic rhinitis, which comprises administration to said mammal of a prophylactically effective anti-asthma or anti-allergic rhinitis non toxic dose of a compound of formula (I)

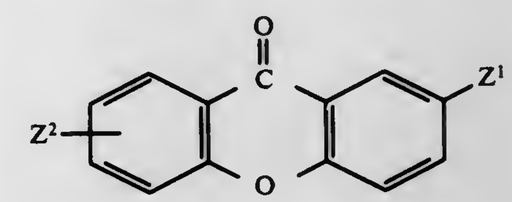

(I)

wherein Z^1 is carboxyl, a pharmaceutically acceptable carboxylate salt, alkyl carboxylate, carboxamide, N-alkyl carboxamide or N,N-dialkylcarboxamide, and Z^2 is a substituent in the 6-position selected from the meanings of Z^1 as defined, wherein the "alkyl" moiety of alkyl carboxylate, N-alkylcarboxamide and N,N-dialkyl carboxamide has 1 to 6 carbon atoms.

4,061,769

METHOD AND COMPOSITION FOR TREATING HYPERTENSION

Masaji Ohno, and Mutsuo Kataoka, both of Kamakura, Japan, assignors to Zaidan Hojin Biseibutsu Kagaku Kenkyu Kai, Tokyo, Japan

Division of Ser. No. 363,559, May 24, 1973, Pat. No. 3,963,756. This application Apr. 1, 1976, Ser. No. 672,594

Claims priority, application Japan, May 24, 1972, 47-50776

Int. Cl.² A61K *31/35, 31/36*

U.S. Cl. 424—283 **14 Claims**

1. A pharmaceutical composition suitable for use in treating essential hypertension in adult humans comprising a hypotensively effective amount of an agent selected from the group consisting of 6-methyl-2H-pyran-2,4(3H)-diones of the formula:

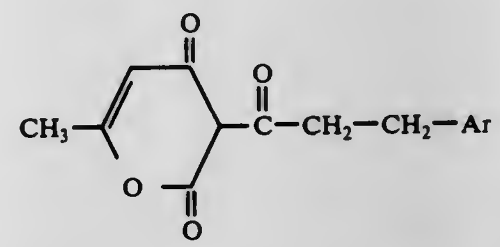

wherein Ar is phenyl substituted by at least one member selected from the group consisting of halogen, hydroxyl, trifluoromethyl, alkyl of 1–4 carbon atoms, alkoxy of 1–4 carbon atoms and alkylenedioxy of the formula —O—R'''—O— wherein R''' is alkylene of 1—4 carbon atoms, provided that said substituted phenyl is not 3,4-dimethoxyphenyl; and the physiologically acceptable salts thereof in combination with a pharmaceutically acceptable carrier.

4,061,770

FLOWABLE, AQUEOUS PESTICIDE COMPOSITIONS OF IMPROVED ACTIVITY

Alfred F. Marks, Mentor, Ohio, assignor to Diamond Shamrock Corporation, Cleveland, Ohio

Filed Apr. 15, 1976, Ser. No. 677,141

The portion of the term of this patent subsequent to Apr. 6, 1993, has been disclaimed.

Int. Cl.² A01N *9/20*

U.S. Cl. 424—304 **7 Claims**

1. A process for preparing a flowable, homogeneous, storage-stable aqueous pesticide composition which comprises successively charging to a chamber equipped with metal balls, water in sufficient quantity to provide, in combination with the other ingredients, 100%, by weight, of finished composition, from 1.0 to 10%, by weight of a non-ionic surfactant, from 0 to 5%, by weight, of a liquid antifoaming agent, from 0 to 10%, by weight, of a freeze-point depressant, and from 10 to 60%, by weight, of an essentially water-insoluble, pesticidally-active component having an average particle size ranging from about

5 microns to over 15 microns; homogeneously mixing the ingredients in the chamber by the shearing action of the rotating metal balls; thereafter adding successively from 0.02 to 1.0%, by weight, of a heteropolysaccharide gum and from 0 to 10%, by weight, of an anti-caking agent and wet-milling the

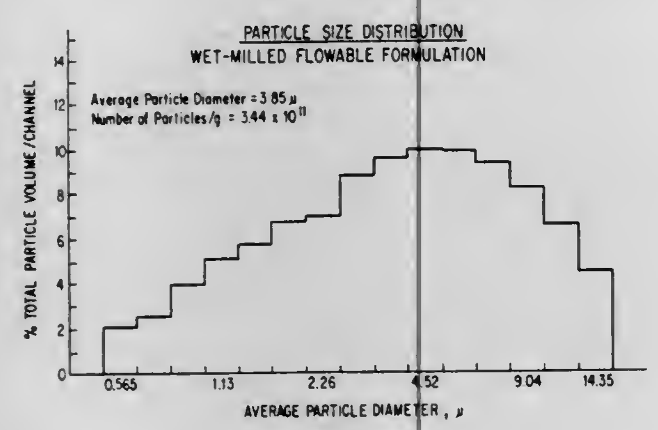

resulting mixture until said gum component is uniformly admixed and the mixture thickens significantly, the total wet-milling time ranging from 1 to 30 hours, the average particle size of the pesticidally-active component in the finished composition being 1.0–5.0 microns.

4,061,771

ETHYNYLINDENYL COMPOUNDS AND DERIVATIVES THEREOF USED IN THE TREATMENT OF PAIN, FEVER AND INFLAMMATION

Julius Diamond, Lafayette Hill, and George H. Douglas, Paoli, both of Pa., assignors to William H. Rorer, Inc., Fort Washington, Pa.

Division of Ser. No. 433,677, Jan. 16, 1974, Pat. No. 3,983,253, which is a division of Ser. No. 306,702, Nov. 15, 1972, Pat. No. 3,810,944. This application July 28, 1976, Ser. No. 709,438

Int. Cl.² A61K *31/275;* C07C *121/50*

U.S. Cl. 424—304 **39 Claims**

1. A compound of the formula

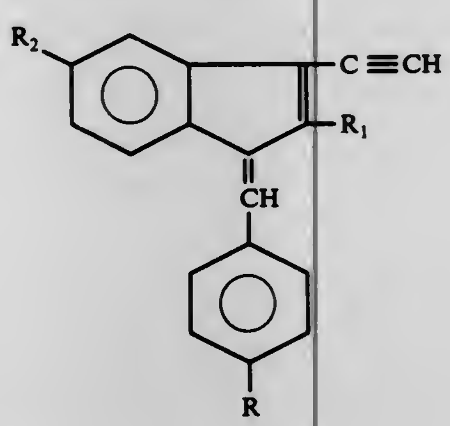

in which

R_1 is hydrogen or lower alkyl;

R is cyano or lower alkyl sulfinyl; and

R_2 is halo, nitro, lower alkyl, amino, or mono- or di-lower alkylamino.

14. A method for the relief of inflammation in a patient which comprises the administration thereto of a therapeutically effective amount between 0.5 mg. to 100 mg. per kg. of body weight per day of a compound of the formula

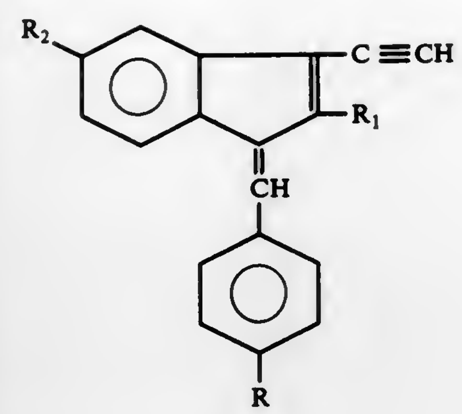

in which

R_1 is hydrogen or lower alkyl;

R is cyano or lower alkyl sulfinyl; and

R_2 is halo, nitro, lower alkyl, amino, or mono- or di-lower alkylamino.

4,061,772

DERIVATIVES OF THE 1,2-DIARYLETHYLENE AND PHARMACEUTICAL COMPOSITIONS THEREOF

Hermann Teufel, Kelkheim, Taunus; Wilhelm Bartmann, Neuenhain, Taunus; Ernold Granzer, Kelkheim, Taunus, and Josef Musil, Konigstein, Taunus, all of Germany, assignors to Hoechst Aktiengesellschaft, Frankfurt am Main, Germany

Division of Ser. No. 556,221, March 7, 1975, Pat. No. 4,001,431. This application Aug. 19, 1976, Ser. No. 715,824

Claims priority, application Germany, Mar. 9, 1974, 2411325

Int. Cl.² A61K *31/275;* C07C *121/70*

U.S. Cl. 424—304 **3 Claims**

1. A 1,2-diaryl-ethylene of the formula

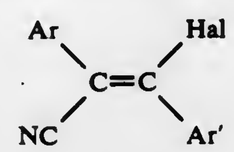

wherein Hal is chlorine or bromine and Ar and Ar' are each phenyl substituted by one or two members selected from the group consisting of lower alkyl, lower alkoxy and halogen, or one of Ar and Ar' is phenyl and the other is substituted phenyl.

3. A method for treating disorders of purine metabolism, hyperlipidemiae, or both conditions, in a patient suffering therefrom, which method comprises administering an effective amount of a compound of the formula

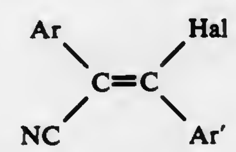

wherein Hal is chlorine or bromine and Ar and Ar', which are the same or different, are phenyl or phenyl substituted by one or two members selected from the group consisting of lower alkyl, lower alkoxy and halogen.

4,061,773

GLYCYRRHETINIC ACID DERIVATIVES

Rosalind Po Kuen Chan, London, England, assignor to Biorex Laboratories Limited, London, England

Filed Jan. 22, 1976, Ser. No. 651,594

Claims priority, application United Kingdom, Feb. 7, 1975, 5296/75

Int. Cl.² A61K *31/22;* C07C *69/34, 69/74*

U.S. Cl. 424—313 **18 Claims**

1. A compound of the formula

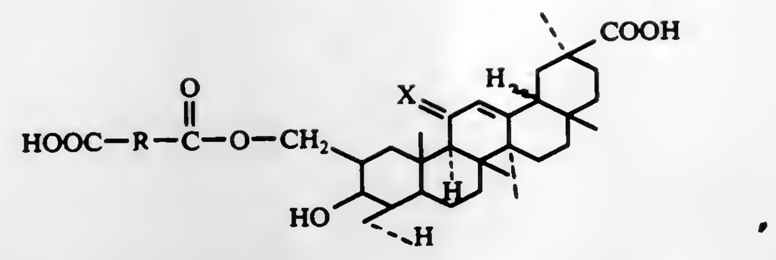

wherein R is alkylene of 1–10 carbon atoms and X represents an oxygen atom or two hydrogen atoms; or a non-toxic salt or methyl or ethyl ester thereof.

14. A pharmaceutical composition comprising a compound according to claim 1 in admixture with a solid or liquid pharmaceutical diluent or carrier.

16. A method of treating inflammatory conditions in mammals, which comprises administering topically, orally, rectally or parenterally a therapeutically effective amount of a compound according to claim 1 to the mammal.

4,061,774

HALOGENATED AMINO METHYL ADAMANTANE DERIVATIVES

Jiban Kumar Chakrabarti, Camberley; Terrence Michael Hotten, Farnborough, and David Edward Tupper, Bracknell, all of England, assignors to Lilly Industries, Limited, London, England

Continuation-in-part of Ser. No. 554,023, Feb. 28, 1975, abandoned. This application Apr. 9, 1975, Ser. No. 566,502

Claims priority, application United Kingdom, Mar. 2, 1974, 9521/74; Mar. 4, 1974, 9576/74

Int. Cl.² A61K *31/13;* C07C *87/40*

U.S. Cl. 424—325 **12 Claims**

1. A compound of the formula

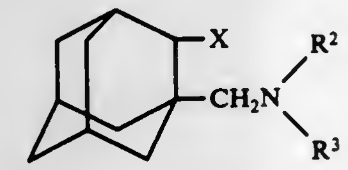

wherein X represents a halogen atom, and wherein R^2 and R^3 are the same or different and represent hydrogen or a C_{1-4} alkyl group, at least one of R^2 and R^3 being C_{1-4} alkyl; or a pharmaceutically acceptable non-toxic acid addition salt thereof.

7. A pharmaceutical formulation containing as an active ingredient into anti-Parkinsonian effective amount of a compound of claim 1 associated with a pharmaceutically acceptable carrier therefor.

10. A method of treating a human suffering from Parkinson's disease which comprises administering a therapeutically effective amount of an adamantane compound of claim 1 to the human.

4,061,775

POLYAMINE COMPOUNDS AS ANTIBACTERIAL AGENTS

Richard A. Dybas, Center Square, Pa.; Nathaniel Grier, Englewood, and Bruce E. Witzel, Westfield, both of N.J., assignors to Merck & Co., Inc., Rahway, N.J.

Filed Sept. 2, 1975, Ser. No. 609,773

Int. Cl.² A01N *9/20*

U.S. Cl. 424—330 **4 Claims**

1. An antibacterial composition comprising a compound of the formula:

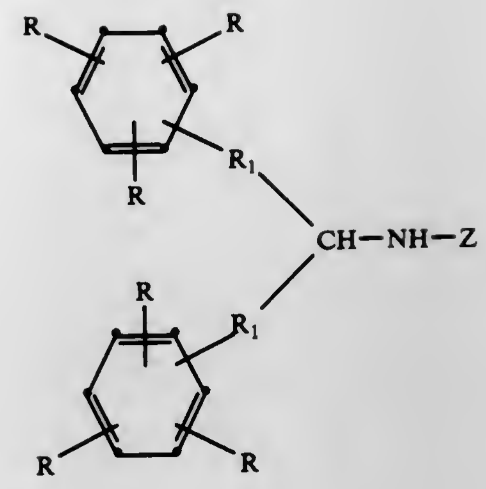

where

R is hydrogen or loweralkyl;

each R_1 is alike or different and is C_1 to C_4 alkylene;

Z is $-Y-N(R_5)-R_6$, where

Y is $-R_2-N(R_3)-R_4-$ or Y is $-R_2-$

and

R_2 is 2-hydroxy-1,3-trimethylene, or R_1 as previously defined;

R_3 is hydrogen, C_1 to C_4 alkyl, C_2 to C_4 aminoalkyl, C_1 to C_4 hydroxyalkyl, or C_2 to C_4 dihydroxyalkyl;

R_4 is 2-hydroxy-1,3-trimethylene, or R_1 as previously defined;

R_5 is hydrogen, aminoethyl, aminopropyl, C_1 to C_4 hydroxyalkyl, or C_2 to C_4 dihydroxyalkyl; and

R_6 is hydrogen, C_1 to C_4 hydroxyalkyl or C_2 to C_4 dihydroxyalkyl;

or acid addition salts thereof and a carrier, where 5 to 100 parts of said compound are included in said composition per million parts of said carrier.

4,061,776

PHARMACEUTICALLY ACTIVE 2-OMEGA-AMINOALKOXYDIPHENYL ETHERS

Ryoji Kikumoto, Machida; Akihiro Tobe, Kawasaki, and Hidenobu Ikoma, Tokyo, all of Japan, assignors to Mitsubishi Chemical Industries Ltd., Tokyo, Japan

Continuation-in-part of Ser. No. 612,005, Sept. 10, 1975, abandoned. This application Nov. 18, 1976, Ser. No. 742,877

Int. Cl.² A01N *9/20, 9/24;* C07C *93/06*

U.S. Cl. 424—330 **7 Claims**

1. A compound having the formula (I):

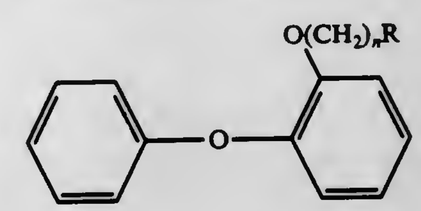

wherein R is selected from the group consisting of amino, C_1–C_5 alkylamino, and C_2–C_6 dialkylamino; n is an integer of 4 or 5; or a pharmaceutically acceptable acid addition salt thereof.

6. A method for palliating conditions of depression in warm-blooded animals, which comprises:

administering to said animal an antidepressant effective amount of a compound of the formula (I):

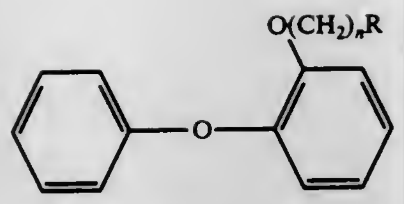

(I)

wherein R is selected from the group consisting of amino, C_1–C_5 alkylamino, and C_2–C_6 dialkylamino; and *n* is an integer of 4 or 5; or a pharmaceutically acceptable acid addition salt thereof.

4,061,777

VASODILATORY TERPENO-PHENOXYALKYLAMINES

Jean Mardiguian, Paris, France, assignor to Mar-Pha, Societe d'Etudeet d'Exploitation de Marques Mar-Pha, France

Filed Apr. 9, 1975, Ser. No. 566,361

Claims priority, application United Kingdom, Apr. 11, 1974, 16074/74

Int. Cl.^{2} **A61K** *31/135;* **C07C** *93/06*

U.S. Cl. 424—330 **18 Claims**

1. A terpeno-phenoxyalkylamine of the general formula:

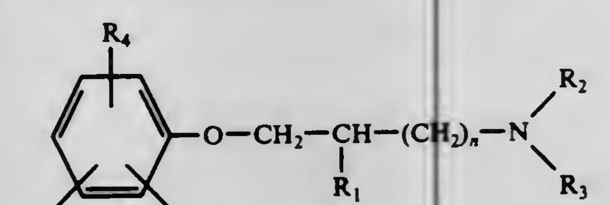

(I)

in which n is 0, 1 or 2,

R_1 is a hydrogen atom, a lower alkyl radical having a straight or branched chain with 1 to 4 carbon atoms, or an OH group,

R_2 and R_3 each represent H, or a lower alkyl radical having a straight chain or branched chain with up to 4 carbon atoms, or a hydroxyethyl radical,

R_4 is a terpene radical chosen from the following group:

2-isobornyl

(2)

5-camphyl

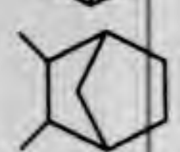

(5)

or

2-norbornyl

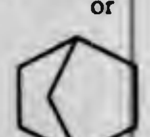

(2)

of exo or endo configuration, in the ortho, meta or para position with respect to the ether function,

R_5 and R_6 may each be H, a lower alkyl radical having a straight or branched chain with up to 4 carbon atoms or a halogen atom, or a physiologically acceptable non-toxic acid salt or quaternary ammonium salt thereof.

17. A pharmaceutical composition useful for causing vasodilatation of the coronaries in a patient containing as the active agent a terpeno-phenoxyalkylamine according to claim 1 in a physiologically active amount and a non-toxic pharmaceutically acceptable carrier.

4,061,778

IMINODIMETHYLENE DI-TERT-ALKYLOPHENONES AND PHENOLS

Jeffrey Nadelson, Lake Parsippany, N.J., assignor to Sandoz, Inc., E. Hanover, N.J.

Division of Ser. No. 588,789, June 20, 1975, Pat. No. 4,011,344, which is a continuation-in-part of Ser. No. 558,180, March 14, 1975, abandoned, which is a continuation-in-part of Ser. No. 460,891, April 15, 1974, abandoned. This application Nov. 17, 1975, Ser. No. 742,556

Int. Cl.^{2} **A01N** *9/20, 9/24;* **C07C** *87/28*

U.S. Cl. 424—330 **7 Claims**

1. A compound of the formula

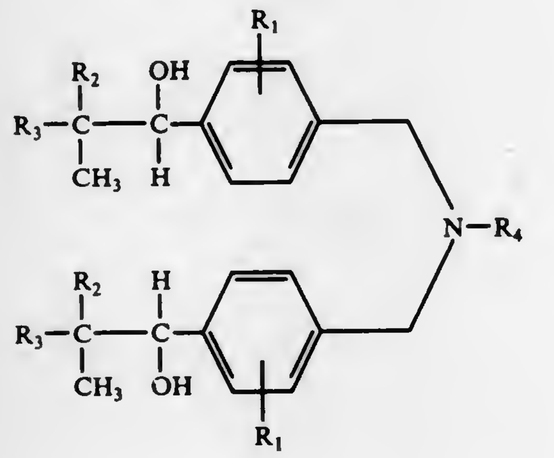

wherein

R_1 represents hydrogen, halo having an atomic weight of about 19 to 36 or straight chain lower alkoxy, and

R_2 and R_3 each independently represent lower alkyl having 1 to 2 carbon atoms, and

R_4 represents lower alkyl having 1 to 4 carbon atoms,

or a pharmaceutically acceptable acid addition salt thereof.

6. A pharmaceutical composition in unit dosage form useful as a hypolipidemic agent comprising a compound of claim 1 and a pharmaceutically acceptable diluent or carrier therefor, said compound being present in an amount of from about 75.0 milligrams to about 1000 milligrams.

4,061,779

NAPHTHALENE DERIVATIVES HAVING ANTI-INFLAMMATORY ACTIVITY

Anthony William Lake, Saffron Waldon, and Carl John Rose, London, both of England, assignors to Beecham Group Limited, United Kingdom

Continuation-in-part of Ser. No. 563,159, Nov. 28, 1975, abandoned, which is a division of Ser. No. 501,773, Aug. 29, 1974, abandoned. This application Dec. 8, 1976, Ser. No. 748,676

Claims priority, application United Kingdom, Sept. 11, 1973, 42550/73

Int. Cl.^{2} **A61K** *31/12;* **C07C** *49/76*

U.S. Cl. 424—331 **13 Claims**

7. A method of reducing inflammation in humans which comprises administering to a human in need thereof an amount of a composition of claim 1 sufficient to produce an anti-inflammatory effect without an undesired oestrogenic effect.

13. Solid 4-(6'-methoxy-2'-naphthyl)butan-2-one hving a melting poit of not less than 78.5° C.

4,061,780

COSMETIC OIL CONTAINING ISOBUTYLENE

Moritoshi Yoshida, Chofu; Takashi Yamamoto, Yokohama, and Sumito Nii, Fujisawa, all of Japan, assignors to Nichiyu Kagaku Co., Ltd., Tokyo, Japan

Continuation of Ser. No. 425,617, Dec. 17, 1973, abandoned. This application Nov. 17, 1975, Ser. No. 632,578

Claims priority, application Japan, Dec. 20, 1972, 47-127823

Int. Cl.^{2} **A61K** *47/00, 7/025*

U.S. Cl. 424—358 **2 Claims**

1. An oil-based cosmetic composition containing from 3 to 50 percent by weight of a cosmetic oil and the balance is conventional cosmetic ingredients for oil-based cosmetic compositions, said cosmetic oil having been prepared by polymerizing a substance consisting essentially of isobutylene or a mixture of isobutylene and one or more olefins selected from the group consisting of 1-butene, 2-butene, 1,2-butadiene and 1,3-butadiene, at a temperature of from −30° to +60° C, in the presence of a Friedel-Craft's catalyst or Lewis acid, to obtain a crude liquid polymer product; distilling said crude liquid polymer product under reduced pressure to separate materials having boiling points of less than 120° C at 1 to 2 mmHg and materials having boiling points of more than 200° C at 1 to 2 mmHg, and recovering a purified polymer product having a boiling point range of from 120° to 200° C at 1 to 2 mmHg and having an average molecular weight in the range of from about 250 to about 600; hydrogenating said purified polymer product to hydrogenate substantially all the double bonds in said purified polymer product; and deodorizing said hydrogenated purified polymer product to obtain said cosmetic oil by one of the steps of (1) steam distilling the hydrogenated purified polymer product under reduced pressure at a temperature below 130° C, or (2) treating the hydrogenated purified polymer product with activated carbon, or (3) effecting solvent extraction of the hydrogenated purified polymer product, or combinations of steps (1), (2) and (3), to remove impurities from the hydrogenated purified polymer product, said cosmetic oil having an average molecular weight in the range of from 250 to 600 and being substantially free of materials having molecular weights below 250 and above 600, said cosmetic oil being colorless and odorless, having a peroxide value, a bromine number, a carbonyl value and an acid value all of substantially zero, and having a viscosity of from 15 to 35 centistokes at 100° F.

4,061,781

EDIBLE PROTEIN SUBSTANCES COMPOSED OF FUNGAL MYCELLIUM

Gerald L. Solomons, High Wycombe, and Gerald W. Scammell, Chinnor, both of England, assignors to Ranks Hovis McDougall Limited, London, England

Continuation of Ser. No. 414,192, Nov. 8, 1973, abandoned, which is a continuation of Ser. No. 140,303, May 4, 1971, abandoned. This application Aug. 5, 1976, Ser. No. 711,964

Claims priority, application United Kingdom, May 14, 1970, 23452/70; June 24, 1970, 30584/70

Int. Cl.^{2} **C12B** *1/00;* **A23L** *1/28*

U.S. Cl. 426—60 **17 Claims**

1. An article of manufacture comprising a nonviable edible non-toxic fungal mycelium of a non-toxic strain of Fusarium possessing a high net protein utilization value of the order of 65 or above based on α-amino nitrogen.

4,061,782

BEVERAGE PACKAGE CUP

Gerald M. Baxter, Don Mills, Canada, assignor to Redimix Beverages Limited, Toronto, Canada

Continuation-in-part of Ser. No. 580,609, May 27, 1975, abandoned. This application Dec. 22, 1976, Ser. No. 753,114

Int. Cl.^{2} **B65B** *29/06*

U.S. Cl. 426—86 **5 Claims**

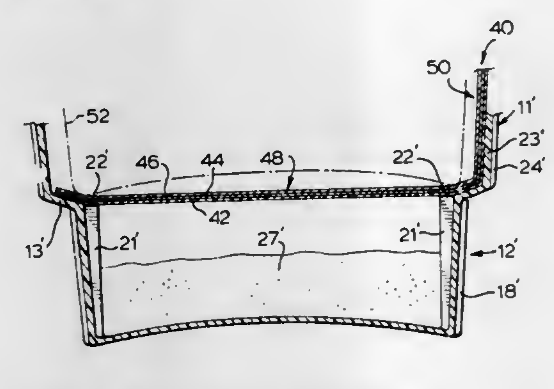

1. A beverage package cup comprising:

a disposable drinking cup body having upper and lower portions of frusto-conical shape, and an outwardly directed annular flange disposed between and connecting said upper and lower portions, said lower portion including a base and an upwardly-divergent side wall, said annular flange being inclined upwardly from said lower portion to said upper portion and defining an annular upper edge with said lower portion, and said upper portion including an upwardly-divergent side wall;

a dry beverage ingredient disposed in said lower portion of the cup body; and,

a removable cap hermetically sealing the beverage ingredient in said lower portion of the cup body, the cap comprising: a closure portion which is flexible and at least substantially impervious to moisture, and having its peripheral margin hermetically sealed to said annular flange of the cup body and extending across said lower portion of the cup so as to protect the beverage ingredient from deterioration due to contact with ambient air and moisture; and a pull-tab accessible from within the said upper portion of the cup body and arranged so that the cap can be detached from said annular flange by pulling on said tab;

said lower portion of the cup body additionally including a plurality of inwardly directed lugs disposed at spaced positions around the side wall of the lower cup body portion and each defining an upper end face disposed generally even with said annular upper edge of said lower portion and immediately below said cap so that, when a second similar cap is stacked inside the first, said lugs support the second cup through the intermediary of said cap and thereby prevent excessive inward displacement of the second cup and penetration of the hermetic seal by dislodgement of the sealing cap.

4,061,783

PACKAGED UNITS AND METHOD OF MAKING SAME

Louis S. Hoffman, Evans Farm Road, Morristown, N.J. 07960, and Robert B. McClosky, P.O. Box 208, Little Falls, N.J. 07424

Continuation-in-part of Ser. No. 488,532, July 15, 1974, abandoned. This application Nov. 17, 1975, Ser. No. 632,701

Int. Cl.^{2} **A65B** *5/04, 25/00*

U.S. Cl. 426—87 **84 Claims**

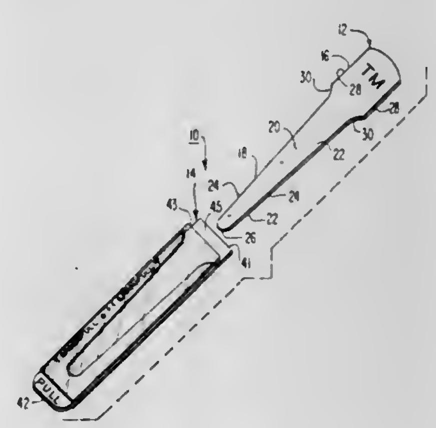

1. A packaged unit including a thin, substantially flat utensil having an upper gripping end and a lower end, having a different configuration than said upper end, extending downwardly therefrom, said lower end being integral with and longer than said gripping end, said lower end being interactable with a fluid and being in a protective sheath which includes (a) a substantially flat rigidifying member of substantially the same thickness as the lower end of the utensil and having a recess extending inwardly from an upper margin for receiving the lower end of said utensil, and (b) flexible sheet material adhered to opposed flat surfaces of the rigidifying member and overlying the recess and opposed flat surfaces of the lower end of the utensil.

53. A method of forming a packaged unit including a thin, substantially flat utensil in a protective sheath, said packaged

unit being formed from a thin, substantially flat substrate and flexible sheet material; said method comprising the steps of:

A. cutting the substrate inwardly of marginal ends thereof to form a thin, substantially flat utensil surrounded by portions of the substrate constituting a rigidifying member of the protective sheath; and
B. adhering the flexible sheet material to the rigidifying member in overlying relationship with the utensil to form, with said rigidifying member, the protective sheath.

4,061,784

SHAPED TEXTURED PROTEIN FOOD PRODUCT

Rudolph William Youngquist, Cincinnati, Ohio, assignor to The Procter & Gamble Company, Cincinnati, Ohio

Continuation of Ser. No. 506,078, Sept. 16, 1974, Pat. No. 3,953,611. This application Dec. 8, 1975, Ser. No. 638,873

The portion of the term of this patent subsequent to Apr. 27, 1993, has been disclaimed.

Int. Cl.² A23J *1/14;* **A23L** *1/36*

U.S. Cl. 426—93 **6 Claims**

1. A protein food product comprising edible textured protein particles in a non-heatset binder consisting of 7S soybean protein isolate.

4,061,785

METHOD AND DEVICE FOR PRESERVING VEGETABLES

Tetsuya Nishino, 8643, Ikuta, Kawasaki, Kanagawa, and Shigeyuki Yasuda, 3-25-18 Setagaya, Setagaya, Tokyo, both of Japan

Continuation of Ser. No. 310,979, Nov. 30, 1972, abandoned, which is a continuation-in-part of Ser. No. 30,865, April 22, 1970, abandoned. This application Oct. 17, 1975, Ser. No. 624,129

Claims priority, application Japan, Apr. 26, 1969, 44-322450; Nov. 1, 1969, 44-103431[U]; Nov. 1, 1969, 44-103432[U]

Int. Cl.² B65B *61/22*

U.S. Cl. 426—124 **17 Claims**

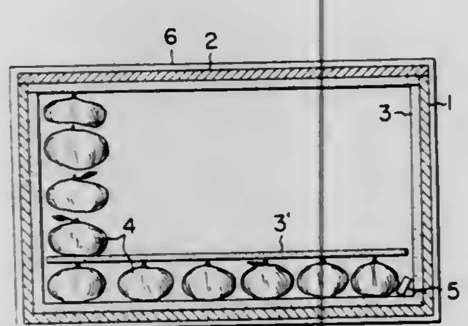

1. A package assembly for the preservation of vegetables to be placed therein, comprising a container with wall means, at least a layer of which consists of plastic material to be sealed after the vegetables are inserted thereinto, for isolating the inside of the container from the outside air to the extent of preventing the introduction of moisture and bacteria while permitting some air permeation, said container containing therein a highly moisture and shock absorbent material capable of preventing the formation of dew from the water emitted by the vegetables, said absorbent material being composed of processed pulp cotton, and a preservative located in the container, in an amount sufficient to prevent the propagation of primary bacteria within the container when the vegetables are present therein.

4,061,786

DYED EDIBLE FOOD CASINGS

Bruno Winkler, Weinheim-Oberflockenbach; Bernd Mangel, Waldmichelbach, and Dieter Fritz, Weinheim, all of Germany, assignors to Naturin-Werk Becker & Co., Weinheim, Germany

Division of Ser. No. 505,444, Sept. 12, 1974, Pat. No. 3,943,262. This application Feb. 18, 1976, Ser. No. 659,051

Claims priority, application Germany, Mar. 11, 1974, 2411587

The portion of the term of this patent subsequent to Mar. 9, 1993, has been disclaimed.

Int. Cl.² A22C *13/00*

U.S. Cl. 426—138 **18 Claims**

1. A dyed edible food casing produced by the process which comprises:

a. applying an edible dye to an edible carrier therefor in finely divided form so that the dye coats the carrier particles,
b. fixing the dye on the carrier particles by contacting the coated carrier particles with a protein from the group consisting of gelatin, collagen and casein for complex formation whereby the dye becomes fixed on the carrier, and thereafter,
c. admixing the carrier coated with the dye with an edible casing material to form an extrudable composition, and,
d. extruding the resulting admixture to form the dye casing.

4,061,787

COLLAGEN COMPOSITIONS HAVING CROSSLINKING AGENT INCORPORATED THEREIN AND THE METHOD OF PREPARING THE SAME

Thomas Engel Higgins, Brookfield, Ill., assignor to Union Carbide Corporation, New York, N.Y.

Filed Mar. 15, 1976, Ser. No. 666,612

Int. Cl.² A22C *13/00*

U.S. Cl. 426—140 **19 Claims**

1. A homogeneous formable collagen composition having uniformly incorporated therein at least about 0.5% by weight up to about 15% by weight based on the solids content thereof of a crosslinking agent selected from the group consisting of unsaturated fatty acids having more than two double bonds, tri-fatty acid esters of glycerol and unsaturated fatty acids having more than two double bond, natural oils containing fatty acid esters with at least 11% by weight of the fatty acid residues thereof having more than two double bonds, fatty acid esters of an unsaturated fatty acid and an unsaturated fatty alcohol, and mixtures of the same.

4,061,788

WORM DETECTION PROCESS

Malcolm R. Wommack, 603 N. Pearl, Comanche, Tex. 76442

Filed Dec. 15, 1975, Ser. No. 640,586

Int. Cl.² A23L *3/28*

U.S. Cl. 426—248 **16 Claims**

1. A method of processing a mixture of shelled nuts and worms or larvae in order to detect said worms or larvae in said mixture for separation therefrom, said mixture containing broken pieces of said nuts, said method comprising the steps of:

coating said mixture with a solution containing a water soluble, edible, non-fluorescent material,
said material being of the type that will adhere to said nuts but will not adhere to the worms or larvae to any significant extent and hence will not affect the fluorescense of said worms or larvae when ultraviolet light is applied thereto,
drying said mixture,
applying ultra-violet light to said mixture thereby causing said worms or larvae to fluoresce whereby said worms or larvae may be readily detected, and
separating the detected worms or larvae from said nuts.

4,061,789

PROCESS OF SIMULATING A LEAN AND FAT MEAT PRODUCT

Gregory Noel Warren, Wodonga, Australia, assignor to Uncle Ben's of Australia Pty. Ltd., Wodonga, Australia

Filed Aug. 4, 1975, Ser. No. 601,601

Claims priority, application Australia, Aug. 6, 1974, 8439/74

Int. Cl.² A23L *1/275;* **A23J** *3/00*

U.S. Cl. 426—250 **5 Claims**

1. A process for producing a food product having portions simulating in colour the appearance of lean meat and other portions simulating in colour the appearance of fat, comprising the steps of compounding together, with heating sufficient at least to pasteurize, a first portion of food components incorporating a material imparting to the first portion a colour simulating that of lean meat; compounding together, with heating sufficient at least to pasteurize, a second portion of food components incorporating a material imparting to the second portion a colour simulating that of fat, at least one of said portions containing protein, thereafter cooling the said portions so as to establish, between the cooled portions, a temperature difference of 5°-25° C.; and commingling the differentially-temperatured portions at a temperature below about 50° C., whereby the coloured portions are cohesive one to the other without excessive deleterious bleeding therebetween.

4,061,790

CONTINUOUS DOUBLE COATING-NATURAL CEREAL

Keith M. Cole, Jr., Battle Creek, Mich., assignor to General Foods Corporation, White Plains, N.Y.

Filed Nov. 14, 1975, Ser. No. 632,136

Int. Cl.² A23L *1/164, 1/18*

U.S. Cl. 426—303 **5 Claims**

1. In a continuous process of coating an admixture of combined comestible particles of substantially differing size, shape and density and wherein particles are first contacted by an oleageinous coating spray in a first zone and thereafter by a dilute sweet syrup in a second zone to overcoat the fat-coated particles issuing from the first zone and effect agglomeration thereof, the improvement which comprises continuously effecting the coating in each said zone in an enclosed screw conveyor means having a length to radius (L/R) ratio of at least 10 to 1, said conveyor having cut and folded screws flights therewithin with the number of cuts and folds being sufficient in number to effect tumbling and reblending of materials both before and after spray application, and said admixture being charged at a rate sufficient in relationship to the rotational rate of said screw within the chamber space in respective conveyors to assure that materials undergoing coating occupy a majority of the chamber space intermediate the conveyor wall and the screw shaft, said conveyor screw flights being proximate and circumjacent the conveyor chamber walls, only a minor fraction of the syrup moisture evaporating during coating in said second zone.

4,061,791

ANTI-ALLERGIC OXANILATE COMPOUNDS

Charles M. Hall, and John B. Wright, both of Kalamazoo, Mich., assignors to The Upjohn Company, Kalamazoo, Mich.

Filed Dec. 29, 1975, Ser. No. 645,024

Int. Cl.² A61K *31/275*

U.S. Cl. 424—304 **26 Claims**

1. A pharmaceutical composition which comprises as the sole active ingredient an anti-asthma, allergic rhinitis, urticara, or food allergy effective amount of a compound of the formula

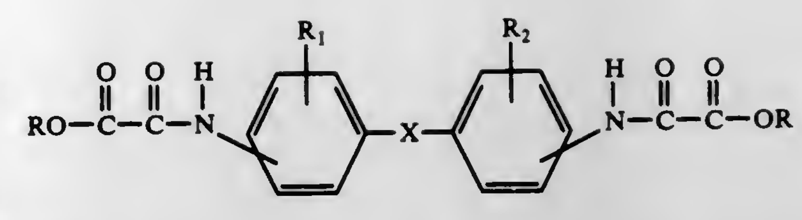

wherein

R is selected from the group consisting of hydrogen, a physiologically acceptable metal or amine cation, alkyl of one to six carbon atoms, inclusive, and

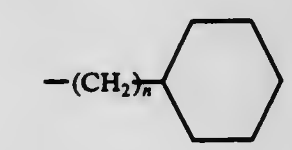

wherein n is 0, 1 or 2;

R_1 and R_2 are the same or different and are selected from the group consisting of hydrogen, halogen, nitro, cyano and

$$-\overset{H}{N}-\overset{O}{\overset{\|}{C}}-\overset{O}{\overset{\|}{C}}-OR$$

with the proviso that when one or both of R_1 and R_2 are

$$-\overset{H}{N}-\overset{O}{\overset{\|}{C}}-\overset{O}{\overset{\|}{C}}-OR, \text{ the two } -\overset{H}{N}-\overset{O}{\overset{\|}{C}}-\overset{O}{\overset{\|}{C}}-OR$$

groups on a phenylene ring are not ortho to each other; and

$$X \text{ is } \overset{O}{\overset{\|}{C}}-NH,$$

in association with a pharmaceutical carrier.

4,061,792

METHOD OF MANUFACTURING A BEVERAGE CONTAINING FRUIT INGREDIENTS

Kaoru Inagami, Tokyo; Isamu Mitsui, Yokohama; Chomatsu Nakamura, and Toru Nozaka, both of Tokyo, all of Japan, assignors to Calpis Shokuhin Kogyo Kabushiki Kaisha, Tokyo, Japan

Continuation of Ser. No. 448,992, March 7, 1974, abandoned, which is a continuation of Ser. No. 206,450, Dec. 9, 1971, abandoned. This application Dec. 10, 1975, Ser. No. 639,435

Claims priority, application Japan, Dec. 17, 1970, 45-112855; Oct. 19, 1971, 46-082097

Int. Cl.² A23L *2/30, 2/00*

U.S. Cl. 426—330.2 **4 Claims**

1. A method for manufacturing a fruit beverage which is obtained by blending acidified milk with grape juice or grape extract comprising:

a. providing grape juice or grape extract containing tannin,
b. mixing said grape juice or grape extract with an acidified solution of casein having a pH not exceeding 3.7,
c. removing coagulums resulting from said mixing and
d. blending said grape juice or grape extract with acidified milk.

3. A fruit beverage which is coagulum-free and which remains stable for a long time which is obtained by blending acidified milk with grape juice or grape extract wherein, before blending, said grape juice or grape extract is treated as follows:

a. providing grape juice or grape extract containing tannin,
b. mixing said grape juice or grape extract with an acidified solution of casein having a pH not exceeding 3.7, and
c. removing coagulums resulting from said mixing.

4,061,793

METHOD FOR BREWING A BEVERAGE

Alexander C. Daswick, 647 Orange Grove, South Pasadena, Calif. 91030

Division of Ser. No. 562,707, March 27, 1975, Pat. No. 3,971,305. This application Dec. 3, 1975, Ser. No. 637,172

Int. Cl.² A23F *1/08, 3/02*

U.S. Cl. 426—433 **2 Claims**

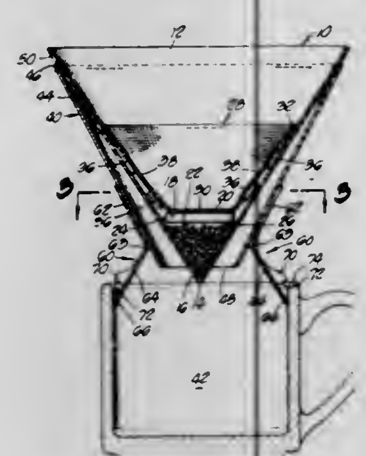

1. A method for brewing coffee or tea, comprising the steps of:

a. packaging a pre-selected quantity of coffee grounds or tea leaves in the bottom portion of a water permeable filter,
b. movably attaching, within said filter element, a buoyant, water deflecting element above said coffee grounds or tea leaves,
c. positioning the lower end of said filter element above a liquid receiving container, and
d. pouring hot water into said filter element onto said water deflecting element, whereby said water is not poured directly upon said coffee grounds or tea leaves.

4,061,794

METHOD FOR FORMING BLOCKS OF NATURAL CHEESE FROM CHEESE CURD

George Kenneth Charles, Wincanton, England, assignor to Wincanton Engineering Limited, London, England

Filed Apr. 2, 1976, Ser. No. 672,953

Claims priority, application United Kingdom, Apr. 4, 1975, 14002/75

Int. Cl.² A23C *19/02*

U.S. Cl. 426—486 **5 Claims**

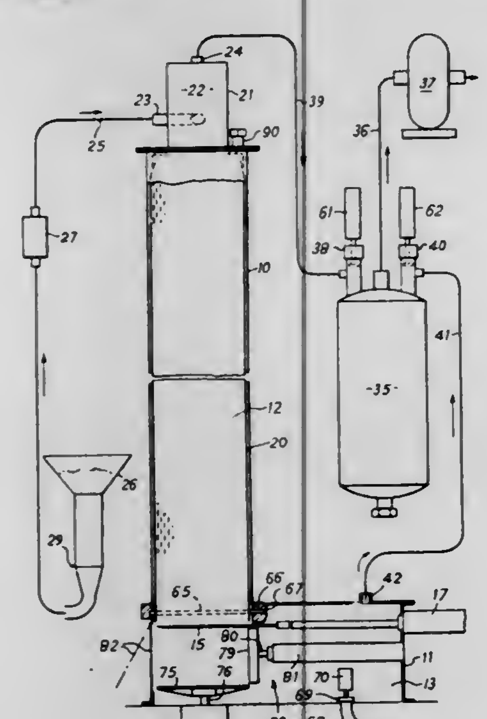

1. In a method of forming blocks of cheese from crumbled cheese curd comprising feeding the crumbled curd into a chamber to form a pillar of curd in said chamber, the curd in the lower portion of said pillar being compressed by the weight of superimposed curd to press out whey therefrom and consolidate the curd, extracting air and whey from said chamber so as to maintain a sub-atmospheric pressure therein during feeding of the curd into the chamber whereby air introduced into the chamber with the curd is "flashed off" before the curd is deposited on the top of said pillar, lowering said pillar, severing the lower end of said pillar of curd to form a block of cheese and continuing the feeding, lowering and severing operations: the improvement comprising subjecting the bottom of said pillar to a lower gaseous pressure than the gaseous pressure acting on the top of said pillar during the lowering of the pillar of curd so that the resulting differential gaseous pressure exerts a force on said pillar of curd urging said pillar downwards.

4,061,795

USES OF α-OXY(OXO) SULFIDES AND ETHERS IN FOODSTUFFS AND FLAVORS FOR FOODSTUFFS

William J. Evers, Red Bank; Howard H. Heinsohn, Jr., Hazlet, and Manfred Hugo Vock, Locust, all of N.J., assignors to International Flavors & Fragrances Inc., New York, N.Y.

Division of Ser. No. 730,537, Oct. 7, 1976. This application Feb. 4, 1977, Ser. No. 765,636

Int. Cl.² A23L *1/226, 1/235*

U.S. Cl. 426—535 **4 Claims**

1. A process for augmenting or enhancing the taste or aroma of a foodstuff comprising the step of adding to said foodstuff from about 0.1 ppm up to about 50 ppm by weight of said foodstuff of an alpha oxosulfide compound having the structure:

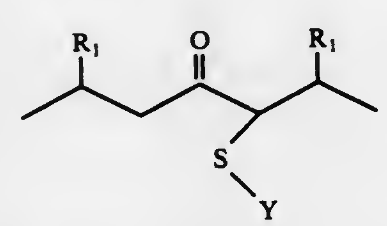

wherein R_1 is hydrogen or methyl and Y is acetyl.

4,061,796

USES OF α-OXY(OXO) SULFIDES AND ETHERS IN FOODSTUFFS AND FLAVORS FOR FOODSTUFFS

William J. Evers, Red Bank; Howard H. Heinsohn, Jr., Hazlet, and Manfred Hugo Vock, Locust, all of N.J., assignors to International Flavors & Fragrances Inc., New York, N.Y.

Division of Ser. No. 730,537, Oct. 7, 1976. This application Feb. 4, 1977, Ser. No. 765,634

Int. Cl.² A23L *1/226, 1/235*

U.S. Cl. 426—535 **4 Claims**

1. A process for augmenting or enhancing the taste or aroma of a foodstuff comprising the step of adding to said foodstuff from about 0.1 ppm up to about 50 ppm by weight of said foodstuff of an alpha oxosulfide compound having the structure:

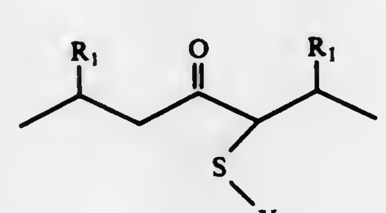

wherein R_1 is hydrogen or methyl and Y is 1,3-diethylacetonyl.

4,061,797

NONCARBONATED, CAFFEINE-CONTAINING FRUIT AND COLA FLAVORED BEVERAGE

Harry Hannan, Jr., and Primrose D. Hannan, both of 1007 Pinar Drive, Orlando, Fla. 32807

Filed Aug. 22, 1975, Ser. No. 606,833

Int. Cl.² A23L *2/26*

U.S. Cl. 426—590 **15 Claims**

1. An aqueous, storage stable, noncarbonated, caffeine-containing beverage consisting essentially of fruit and cola flavoring and an edible acid, said fruit flavoring consisting of a concentrated fruit-flavoring in an effective amount by weight or a fruit juice in an amount between about 6.3-34.35% by weight, said fruit flavoring being added to overcome the unpalatable constituents of said cola flavoring, said amount of fruit flavoring being less than an amount which overcomes said cola flavoring so as to render a palatable, noncarbonated beverage having a distinct fruit and cola flavoring.

4,061,798

METHOD FOR PREPARING HARD BUTTERS FROM PALM OIL

Junji Kanegae, 38-90, Nishikanenoi, Showa-cho, Kitakatsushika, Tokyo; Tsugio Izumi, 3-302, Midejutaku, 280, Tsuruhara, Izumisano, Osaka, and Akio Mandai, 22-8, Asahimachi, Izumiotsu, Osaka, all of Japan

Filed Sept. 22, 1976, Ser. No. 724,821

Int. Cl.² A23D *5/00*

U.S. Cl. 426—607 **14 Claims**

1. A process for preparing a hard butter from palm oil, said method comprising hydrogenating a soft palm oil fraction having an iodine value of at least 55 with a conventional hydrogenation catalyst in the presence of a catalytically effective amount of methionine to thereby form a hardened product containing at least 40% of trans-isomers.

4,061,799

METHOD OF PATTERNING STYRENE DIENE BLOCK COPOLYMER ELECTRON BEAM RESISTS

Terry L. Brewer, Plano, Tex., assignor to Texas Instruments Incorporated, Dallas, Tex.

Continuation-in-part of Ser. No. 412,930, Nov. 5, 1973, abandoned. This application Sept. 22, 1975, Ser. No. 615,447

Int. Cl.² B44C *1/22;* **C03C** *15/00;* **B05D** *3/06*

U.S. Cl. 427—43 **8 Claims**

1. The method of forming a patterned negative high energy beam resist, comprising the steps of:

a. forming a thin film of a styrene-diene block copolymer on a support;
b. scanning said thin film with a high energy beam in a predetermined pattern requiring resolutions of less than 1 micron at a speed of at least 5×10^{-6} coulombs per cm² to cause the irradiated portion of said copolymer to cross link where irradiated by said high energy beam; and,
c. dissolving the uncross linked portion of said copolymer with a solvent which dissolves and removes the uncross linked copolymer, thereby leaving said cross linked portion of said copolymer on said support with openings in a desired pattern.

4,061,800

VAPOR DESPOSITION METHOD

Emmett R. Anderson, Los Gatos, Calif., assignor to Applied Materials, Inc., Santa Clara, Calif.

Continuation-in-part of Ser. No. 547,717, Feb. 6, 1975, abandoned. This application Jan. 27, 1976, Ser. No. 652,774

Int. Cl.² B05D *3/06*

U.S. Cl. 427—46 **6 Claims**

1. In a method for effecting vapor deposition of a material on an object, the steps of:

A. heating the material in a chamber isolated from the object to vaporize the material;
B. maintaining the chamber in a sealed condition and heating the vaporized material to an elevated temperature and pressure to form a vapor of high kinetic energy; and

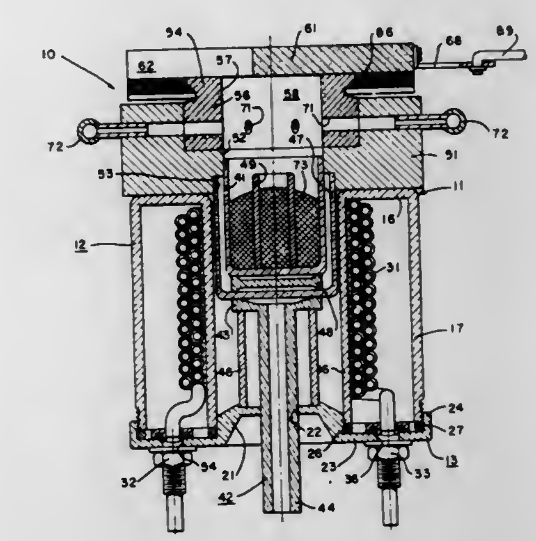

C. opening the chamber to effect a rapid release of the highly pressurized vapor from the chamber to the object.

4,061,801

METHOD OF PRODUCING ALUMINUM OR ALUMINUM ALLOY COATED STEEL SHEETS WITH AID OF POWDER METHOD

Motoharu Hamada, and Shunichi Harada, both of Chiba, Japan, assignors to Kawasaki Steel Corporation, Kobe, Japan

Filed June 30, 1976, Ser. No. 701,105

Claims priority, application Japan, July 19, 1975, 50-87857

Int. Cl.² C23C *9/00;* **C23B** *5/50*

U.S. Cl. 427—192 **11 Claims**

1. A method of producing an aluminum or aluminum alloy coated steel sheet with the aid of powder method, comprising preliminarily electroplating a zinc coating having a thickness of 0.01 to 0.3 μm to a steel sheet surface, applying an aluminum powder to the zinc coated steel sheet, and subjecting to the coated steel sheet steps of heating, rolling and heating again.

4,061,802

PLATING PROCESS AND BATH

Francis E. Costello, 7 Madison Ave., Laurel Springs, N.J. 08084

Continuation of Ser. No. 588,725, Oct. 24, 1966, abandoned, and a continuation-in-part of Ser. No. 504,192, Oct. 23, 1965, abandoned. This application Jan. 7, 1976, Ser. No. 647,001

Int. Cl.² C23C *3/02*

U.S. Cl. 427—304 **43 Claims**

1. An electroless nickel bath for applying a nickel coating to articles comprising about ¾ gallon of water, about 320 cc. of ammonium hydroxide, about 3¼ ounces of nickel sulphate, about 8 ounces of nickel chloride, about 12 ounces of sodium hypophosphite to provide the reducing agent anions for reducing the nickel ions to a metal and about 19¼ ounces of sodium citrate and about 13½ ounces of ammonium chloride as the stablizing agent for controlling the operating speed of the reducing agent, the bath having a pH of about 8.5, and the ratio by weight of nickel ions to reducing agent anions being about 1 to 2.7.

4,061,803

LEATHER BELTS OR APRONS FOR TEXTILE MACHINES

Wallace Ronald Brooksbank, Croft House, Hetton, Skipton, and David Toft, 6 Brackenley Drive, Embsay, both of North Yorkshire, England

Filed Mar. 9, 1976, Ser. No. 665,189

Int. Cl.² B05D *3/00, 3/02, 3/12*

U.S. Cl. 427—323 **5 Claims**

1. A method for the production of a relatively thin leather

belt or apron for conveying textile fibres on textile machines from natural leather having an outer smooth non-fibrous side and an inner fibrous side which comprises the steps of removing from said natural leather a layer of substantial depth at the non-fibrous outer smooth side to thereby outwardly expose an intermediate fibrous surface while retaining substantially intact the original fibrous inner side of said natural leather, subjecting said exposed surface to mechanical treatment to compact the fibres at said exposed surface, and impregnating said exposed surface with a polymeric material, whereby to produce a belt or apron having a smooth flexible non-tacky outer textile fiber conveying surface.

4,061,804
NON-DIRECTIONAL RECTANGULAR FILAMENTS AND PRODUCTS
Walter Graham McCulloch, Candler, N.C., assignor to Akzona Incorporated, Asheville, N.C.
Filed Aug. 12, 1976, Ser. No. 713,954
Int. Cl.² B32B *33/00*
U.S. Cl. 428—17 **25 Claims**

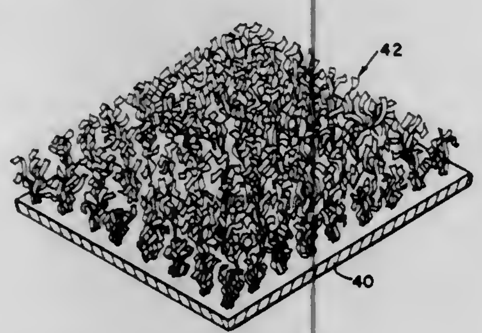

15. A cut-pile synthetic turf product wherein the pile is formed of ribbon filaments of at lest 100 denier each, having a substantially rectangular cross-sectional configuration and characterized by major and minor axes which impart a directional flexibility to the filament, each of said filaments having a plurality of folds wherein both the major and minor axes bend simultaneously, said folds being randomly oriented with respect to one another to overcome the natural directional flexibility of the rectangular cross-section and impart non-directional flexibility to the filaments, said turf having an essentially uniform, flat pile surface giving a non-directional response to objects rolled thereon, due to the universal flexibility of the filaments forming said surface.

4,061,805
PRESSURE SENSITIVE ADHESIVE STRIPS AND SHEETS
James Thomas Thompson, and Kenneth Hon Seto, both of Dayton, Ohio, assignors to Protective Treatments, Inc., Dayton, Ohio
Continuation of Ser. No. 347,823, April 4, 1973, Pat. No. 3,896,245. This application June 20, 1975, Ser. No. 588,861
The portion of the term of this patent subsequent to July 22, 1992, has been disclaimed.
Int. Cl.² B32B *25/02, 25/14, 27/20*
U.S. Cl. 428—31 **5 Claims**

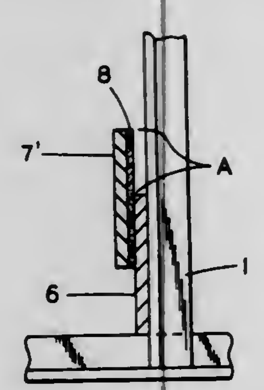

1. A permanently compressible pressure sensitive composite strand in the form of a ribbon adapted for attachment to an automobile body and constituted by a tacky permanently compressible, nonporous cohesive material, said ribbon having little or no resilience and constituted by elastomeric material compounded with from 0.45 to 2.5 times the weight of elastomeric material of low volatile liquid plasticizer and finely divided solids in an amount of at least 0.93 parts per part of elastomeric material, the finely divided solids including from 0.5 to 2½ parts, per part of elastomeric material, of finely divided bulk fibrous solids or solids that form thixotropic mixtures with the said liquid plasticizer, said ribbon being coated with a pressure sensitive adhesive, and said base strand being permanently deformable by pressure above about 15 pounds per square inch, but exhibiting negligible flow at 0.6 pounds per square inch pressure.

4,061,806
FLEXIBLE HOLLOW FISHING ROD
James Monroe Lindler, Lexington, and Michael Taras Romanyszyn, Jr., Columbia, both of S.C., assignors to Shakespeare Company, Columbia, S.C.
Filed Apr. 12, 1976, Ser. No. 675,713
Int. Cl.² B32B *7/02, 17/12*
U.S. Cl. 428—35 **5 Claims**

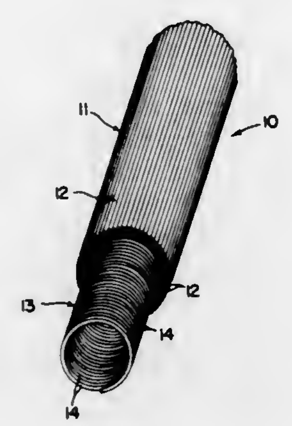

1. A flexible hollow fishing rod shaft of circular cross section having only two layers, an outer layer comprising at least longitudinally extending fiber glass filaments bonded together with a flexible plastic resin, and an inner layer of graphite filaments wound in a tight helix and impregnated with a flexible plastic resin, the radial thickness of the fiber glass layer being approximately seven to eleven times the thickness of the graphite layer.

4,061,807
ADSORBENT BODY AND METHOD FOR MAKING SAME
Amos J. Shaler, 705 W. Park Ave., State College, Pa. 16801, and Daniel C. McLean, 4029 Alicante, Fort Worth, Tex. 76133
Filed Feb. 9, 1976, Ser. No. 656,551
Int. Cl.² B01D *27/04;* **B01J** *1/06*
U.S. Cl. 428—36 **7 Claims**

1. A porous adsorbent body comprising an array of granules of adsorbent material and particles of nylon having a size from about 200 to 600 mesh bonded to said granules with at least some of said particles bridging between contiguous granules and bonding them together at discrete regions to form a self-sustaining body, said granules having a size of from about 8 to 60 mesh and defining interstices which open into each other between said regions for admission of fluid to the surface of the granules in the interior of said body, the ratio between the amounts of the adsorbent granules and the particulate nylon being within the range of from about 60 to 95 parts by volume of the granules to from 5 to 40 parts by volume of the particulate nylon.

4. A porous adsorbent body as set forth in claim 1 wherein

an exterior surface of said body has secured thereto means for sealing the body in a container.

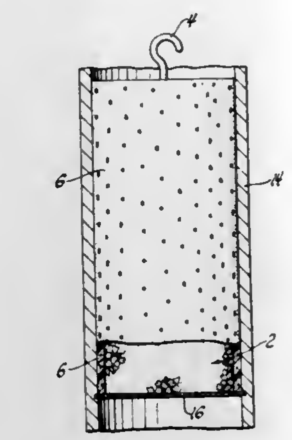

6. A porous adsorbent body as set forth in claim 4 wherein said means is a hollow sleeve of stretchable material having an inlet for the admission of fluid under pressure to the interior of the sleeve thereby to cause expansion thereof.

4,061,808
COMPOSITE LABEL STRIP FOR USE WITH LABEL APPLYING APPARATUS
Yo Sato, Tokyo, Japan, assignor to Kabushiki Kaisha Sato Kenkyusho, Tokyo, Japan
Filed Apr. 12, 1976, Ser. No. 675,717
Claims priority, application Japan, Apr. 14, 1975, 50-49199[U]
Int. Cl.² B65D *65/28;* **G09F** *3/00*
U.S. Cl. 428—42 **8 Claims**

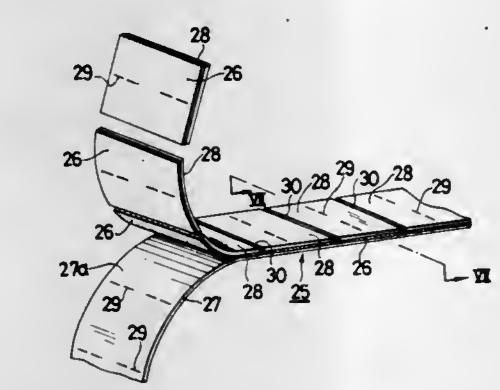

1. A composite label strip structure comprising:
a label strip extending in a longitudinal direction and having a top side and an underside;
a backing strip that is oriented to extend in said longitudinal direction and that is substantially coextensive in shape and in placement with said label strip; said backing strip having a surface that is releasably adhered to said underside of said label strip;
said label strip having a plurality of cuts therethrough extending from said top side to said under side thereof, each said cut extending transversely of said longitudinal direction of extension of said label strip; said cuts being spaced at predetermined intervals along said label strip in said longitudinal direction; at said cuts, said label strip is separable into a series of labels;
the composite structure of both said label strip and said backing strip having common through perforations, each extending from said backing strip bottom side and continuing through said backing strip to the top side thereof; and each converging into said label strip; for each said label, there is at least one row of said perforations, and each said row of perforations extending transversely of said longitudinal direction of extension of said label strip; all said rows of perforations through the composite strip structure being spaced longitudinally away from said cuts between labels.

4,061,809
DECORATIVE PANEL OF WOOD STRIPS HAVING SECTIONS OF VARYING THICKNESS
Edward J. Mautner, 7937 West Drive, Miami Beach, Fla. 33141
Filed Feb. 11, 1977, Ser. No. 767,909
Int. Cl.² B32B *3/14, 3/16*
U.S. Cl. 428—50 **2 Claims**

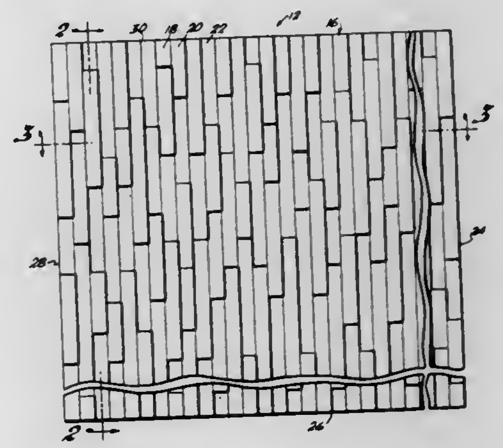

1. A decorative panel comprising a backing board and a plurality of equiwidth rows of wood strips of a common length equal to the length of the backing board and of a number such so as to completely cover the panel and wherein the rows comprise a plurality of strips in abutting relation to one another with adjacent strips being of a different thickness.

4,061,810
FLAME-RETARDANT CARPET AND COMPOSITION FOR PREPARING THE SAME
Pritam Singh Minhas, Mendham, N.J., and Bernard Sukornick, Williamsville, N.Y., assignors to Allied Chemical Corporation, Morris Township, N.J.
Filed Sept. 27, 1976, Ser. No. 727,072
Int. Cl.² B32B *3/02, 33/00*
U.S. Cl. 428—85 **50 Claims**

1. A flame retardant carpet having a relatively pliable primary backing and a tufted surface, said surface being comprised of fibers selected from the group consisting of polyester and polyamide fibers, said carpet having from about 1 to 15 weight percent of a composition added thereto, said composition comprising:
a. about 10 to about 90 weight percent of a polyvalent metal compound selected from the group consisting of oxides and hydroxides of tin, antimony, aluminum and zinc; and
b. about 10 to about 90 weight percent of a hydroxycarboxylic acid selected from the group consisting of malic acid, citric acid, tartaric acid, gallic acid, and 2,4-dihydroxybenzoic acid.

4,061,811
ANTISTATIC CARPET AND PRODUCTION THEREOF
Hideo Takase, Shiga; Toyota Ishii, and Shiro Nishiumi, both of Ohtsu, all of Japan, assignors to Toray Industries Inc., Tokyo, Japan
Filed Mar. 4, 1976, Ser. No. 663,819
Claims priority, application Japan, Mar. 5, 1975, 50-26462; Mar. 5, 1975, 50-26457; Oct. 21, 1975, 50-142565[U]
Int. Cl.² B32B *3/02;* **B05D** *3/12*
U.S. Cl. 428—95 **12 Claims**

1. An antistatic pile carpet comprising a primary backing of a base cloth, a plurality of rows of pile yarn tufted through the base cloth and a backing layer of a latex having carbon fibers

dispersed therein, said carbon fibers having a diameter of from 4μ to 26μ and a length of from 0.05 mm to 30 mm and being

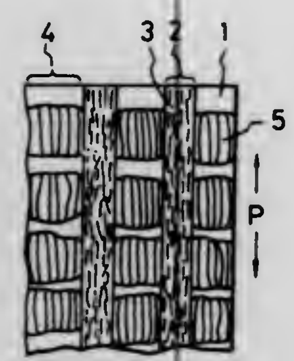

positioned between and along the rows of pile yarn and being arranged parallel to the rows.

4,061,812
HONEYCOMB-LAMINATE COMPOSITE STRUCTURE
William J. Gilwee, Jr., Sunnyvale, and John A. Parker, Los Altos, both of Calif., assignors to The United States of America as represented by the Administrator of the National Aeronautics and Space Administration, Washington, D.C.
Filed June 22, 1976, Ser. No. 698,646
Int. Cl.[2] B32B *3/12*
U.S. Cl. 428—117 **12 Claims**

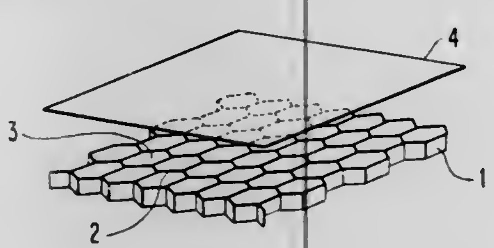

1. A honeycomb-laminate composite structure comprising
a. a cellular core of a polyquinoxaline foam in a honeycomb structure, said foam having a density within the range of about 1.5 to about 5 lb/ft^3, and
b. a layer of a non-combustible fibrous material impregnated with a polyimide resin laminated thereon.

4,061,813
COMBINATION SHEATHING SUPPORT - MEMBER BUILDING PRODUCT
Robert L. Geimer, Verona, and William F. Lehmann, Madison, both of Wis., assignors to The United States of America as represented by the Secretary of Agriculture, Washington, D.C.
Continuation-in-part of Ser. No. 478,284, June 11, 1974, abandoned. This application June 14, 1976, Ser. No. 695,623
Int. Cl.[2] B32B *3/00, 5/16*
U.S. Cl. 428—183 **4 Claims**

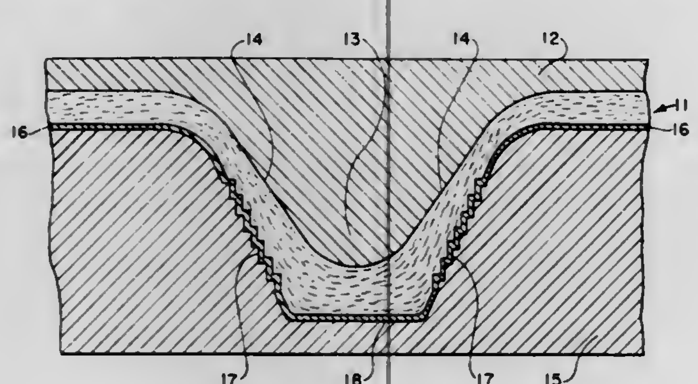

1. A combination sheathing-support member building product which incorporates both framing and sheathing into an integral unit for use in roof, floor, or wall applications in constructing frame buildings, said product comprising a mixture of cellulosic particles having a bulk density of from 2 to 7 pounds per cubic foot and an amount of adhesive binder of from 3 to 8 percent of the ovendried weight of said particles, said mixture being press-molded in a single operation into a panel having smooth, flat sections on its interior and exterior sides, said flat sections serving as sheathing; a plurality of parallel and evenly spaced projections between said flat sections on said interior side, each of said projections being a pair of stepped sidewalls inclined toward one another and culminating in a flat bottom which is parallel with said flat sections; a plurality of parallel and evenly spaced depressions between said flat sections on the exterior side, said depressions being directly opposite of, and aligned with, said projections on the interior side; and interior projections and exterior depressions extending an entire dimension of said panel, thus forming a plurality of channels in said panel, said channels serving as support members giving strength and support of conventional 2 by 4 stud-and-sheathing construction to the panel.

4,061,814
METHOD AND MASKING STRUCTURE FOR CONFIGURATING THIN LAYERS
Alfred Politycki, Ottobrunn, Germany, assignor to Siemens Aktiengesellschaft, Berlin & Munich, Germany
Filed Apr. 1, 1975, Ser. No. 564,105
Claims priority, application Germany, Apr. 3, 1974, 2416186
Int. Cl.[2] B32B *3/10*
U.S. Cl. 428—196 **8 Claims**

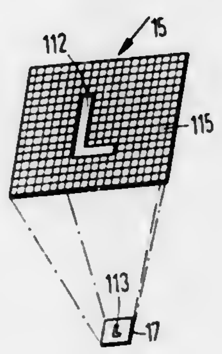

1. A mask for use in configurating thin layers, wherein the thin layer to be configurated is irradiated with an electron beam passing through such mask to obtain a configuration on such layer corresponding to the configuration of a masking member carried by such mask, comprising a masking member of thin metal, and a supporting structure for said masking member comprising a plurality of series of fine supporting elements, the elements of each series extending in the same direction and traverse to the direction of another series, said series being interconnected at their intersection to form a mesh-like structure, the elements thereof each being of a width, in transverse cross-section, which is sufficiently small, that in use stray radiation of the electron beam within the thin layer will completely radiate the geometric shadow areas of the supporting elements thereon.

4. A method for configurating thin layers, wherein the thin layer to be configurated is irradiated with an electron beam passing through a mask to obtain a configuration on such layer corresponding to the configuration of selected portions of such a mask, comprising the steps of positioning the layer to be configurated in the path of an electron beam for irradiation thereby, interposing a masking member, which is impermeable to the electron beam and has a desired configuration, on such beam path between the source of such electron beam and said layer, supporting said masking member by means of relatively very fine supporting elements which extend over areas of the mask which are to be permeable to the electron beam, and spacing the masking member so supported, relative to the layer to be configurated, a distance such that in consideration with the employed widths of the fine supporting elements and parameters with respect to the relative sizes of the masking member and film configuration structures, that stray radiation of the electron beam within the thin layer completely radiates the geometric shadow areas of the fine supporting elements thereon.

4,061,815
NOVEL COMPOSITIONS
Robert E. J. Poole, Jr., Newport Beach, Calif., assignor to The Upjohn Company, Kalamazoo, Mich.
Filed Oct. 26, 1967, Ser. No. 678,425
Int. Cl.[2] F41H *1/02, 5/04;* **B32B** *5/24*
U.S. Cl. 428—215 **16 Claims**

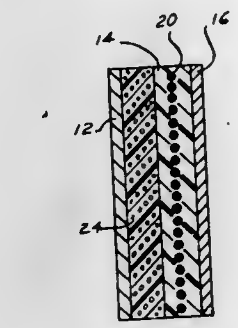

1. A laminated sheet characterized by high impact resistance which comprises, in combination, a multiplicity of layers of sheet material, each layer being bonded to the next adjacent layer at the common interface thereof;
the outermost layer of material on the one side being selected from the class consisting of metal sheet and fiberglass reinforced resin having a thickness from about 0.50 to about 1.5 inches;
the outermost layer of material on the other side being a retaining skin having a thickness within the range of about 0.125 to about 0.25 inches;
the said outermost layers of material having sandwiched therebetween at least one layer having a thickness within the range of about 1.0 to about 4.0 inches fabricated from an elastomeric non-cellular polyurethane having a hardness from about 95 Shore A to about 60 Shore D;
the overall thickness of said laminated sheet being within the range of about 2.0 to about 5.0 inches and the weight of said laminated sheet being not greater than about 35 pounds per square foot.

4,061,816
INTEGRALLY SINTERED CERAMIC COMPLEX AND METHOD OF MANUFACTURING THE SAME
Tomosaburo Kitamura, Kawasaki, Japan, assignor to Sony Corporation, Tokyo, Japan
Filed Mar. 23, 1976, Ser. No. 669,516
Claims priority, application Japan, Apr. 1, 1975, 50-40151
Int. Cl.[2] B32B *7/02;* **C04B** *35/00, 35/46*
U.S. Cl. 428—218 **9 Claims**

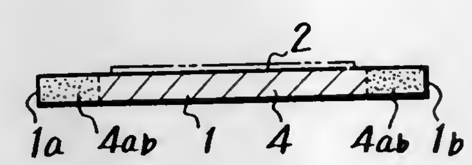

1. An integrally sintered ceramic complex, comprising: a first piezoelectric ceramic portion; and a second ceramic portion; said first and second portions having a common external surface, said first and second ceramic portions being sintered integrally so that a boundary layer is formed between said first and second portions, the ratio of the theoretical density to the sintered density of said first ceramic portion being selected smaller than the same ratio of said second ceramic portion, and the ratio of the theoretical density to the sintered density in the boundary layer gradually increased from the ratio of said first portion to the ratio of said second portion so that ultrasonic waves propagating in said first piezoelectric portion are effectively reduced in the boundary layer and said second portion.

4,061,817
LUGGAGE SHELLS AND PROCESS FOR THE MANUFACTURE THEREOF
John M. Maxel, St. Charles, Ill., assignor to Armco Steel Corporation, Middleton, Ohio
Continuation of Ser. No. 483,793, June 27, 1974, abandoned. This application June 30, 1975, Ser. No. 591,493
Int. Cl.[2] A45C *13/38*
U.S. Cl. 428—246 **5 Claims**

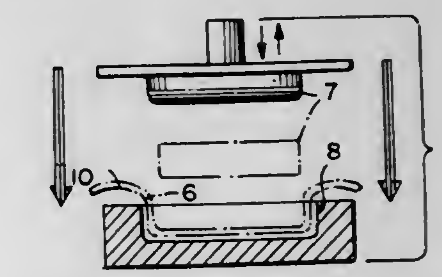

1. An article of luggage including in combination a molded three-dimensional self-supporting luggage shell consisting essentially of a glass fiber reinforced thermoplastic polymer sheet containing 5% to 50% by weight glass fibers distributed therein, said shell being covered with a sheet material, said shell having a thickness of approximately 0.04 to 0.06 inch as compressed from an initial sheet stock thickness of about 0.08 to 0.15 inch and said shell having a specific gravity throughout within the range of 0.90 to 1.40, said shell as compressed having a flexural strength within the range of 5,000 to 30,000 pounds per square inch and a notched izod impact resistance within the range of 2 to 15 foot pounds per inch.

4,061,818
PRINTING BLANKET CONTAINING HIGH STRENGTH FILAMENTS
John C. Duckett, Clyde; Wayne W. Easley, Lake Junaluska, and Andrew J. Gaworowski, Waynesville, all of N.C., assignors to Dayco Corporation, Dayton, Ohio
Filed Oct. 7, 1976, Ser. No. 730,412
Int. Cl.[2] B32B *7/02, 25/10, 27/02, 27/34*
U.S. Cl. 428—246 **10 Claims**

1. A printing blanket comprising, a base ply, a printing face, and a high strength woven layer disposed between said base ply and printing face, said woven layer being defined by warps and wefts wherein at least said warps are made of flexible synthetic filaments having a breaking tenacity ranging between 18 and 26 grams per denier and an elongation at break ranging between 3 and 5 percent, said layer having approximately half as many wefts as warps with the lesser number of wefts serving to reduce any tendency for crimping of said layer and blanket, said blanket having optimum stability and minimum elongation under operating tension.

4,061,819

PRODUCTS OF CONVERTED LIGNOCELLULOSIC MATERIALS

Derek Barnes, Vancouver, Canada, assignor to MacMillan Bloedel Limited, Vancouver, Canada

Continuation of Ser. No. 502,065, Aug. 30, 1974, abandoned, which is a division of Ser. No. 237,705, March 24, 1972, abandoned. This application Aug. 11, 1976, Ser. No. 713,507

Int. Cl.[2] B32B *5/12*

U.S. Cl. 428—294 7 Claims

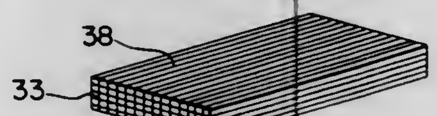

1. A discrete dimensioned structural lumber product comprising adhesively bonded, substantially straight wood strands having lengths of at least 12 inches, average widths of 0.05 inch to 0.25 inch, and average thickness of 0.05 inch to 0.5 inch, said strands being disposed, side by side lengthwise of the lumber product in substantially parallel relationship with adhesive bonding adjacent strands, the total amount of adhesive solids in said lumber product being from 1% to 5% by weight, said lumber product having a modulus of elasticity for a given dry wood density within the boundaries in FIG. 4 of the curve of western softwood clear lumber as an upper limit of modulus of elasticity for a given dry wood density and as a lower limit of modulus of elasticity for a given dry wood density the curve for 24 inch fiber length 1% resin solids.

4,061,820

SELF-ADHERING MATERIAL

Robert P. Magid, Ringoes, N.J., and Gerald Sly, Levittown, Pa., assignors to Oxford Chemicals, Incorporated, New Brunswick, N.J.

Filed Apr. 7, 1976, Ser. No. 674,598

Int. Cl.[2] B32B *3/26, 5/18;* C09J *7/02*

U.S. Cl. 428—311 7 Claims

7. An adhesive-containing material comprising a plastic foam material and a dry, solvent-free, permanently tacky adhesive composition, said plastic foam having a cellular structure including a surface layer of open cells, the actual surface of said foam being defined by the leading edges of the sidewalls of said surface layer of open cells, said plastic foam being sufficiently flexible such that the cell walls of said surface layer of open cells may be moved into substantial alignment with the actual surface of said plastic foam upon the application of pressure, said surface layer of open cells being coated with said adhesive composition, said adhesive composition having been applied to said plastic foam while said foam was maintained under a pressure sufficient to bring said cell walls into substantial alignment with the actual surface of said plastic film such that a substantial portion of said adhesive composition is located below the actual surface of said plastic foam in the absence of pressure on said foam, the amount of said adhesive composition being insufficient to form a continuous adhesive film on the surface of said plastic foam and insufficient to coat a substantial number of cells below said surface layer of open cells, said adhesive-containing material being incapable of adhering to any opposed surface without the application of pressure.

4,061,821

SEMIPERMEABLE COMPOSITE MEMBRANES

Fusakazu Hayano; Yasuo Hashino, and Kiyoshi Ichikawa, all of Fujishi, Japan, assignors to Asahi Kasei Kogyo Kabushiki Kaisha, Osaka, Japan

Filed Dec. 14, 1976, Ser. No. 750,544

Claims priority, application Japan, Dec. 29, 1975, 50-156030; Dec. 30, 1975, 50-156832

Int. Cl.[2] B01D *31/00*

U.S. Cl. 428—304 9 Claims

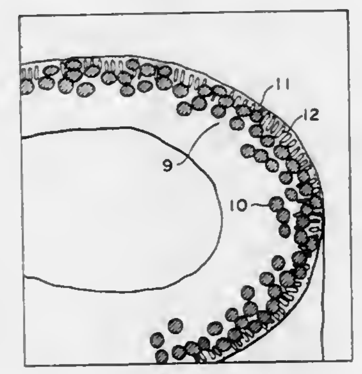

1. A semipermeable composite membrane consisting of a porous substance and a reinforcing material made of fibrous material embedded in the wall of the porous substance, at least one part of said porous substance forming a porous region of a network structure having pore sizes in the range from 500A to 5μ; said porous region containing a number of voids having diameters of 10μ or greater; and the ratio of water permeability of said membrane after one time treatment with hot water at 80° C or after drying at 20° C to the respective water permeability before said treatment being 0.3 or higher.

4,061,822

CRUSHED FOAM COATED LEATHER AND LEATHER-LIKE MATERIALS

John G. Brodnyan, Langhorne, Pa.; Donald F. Holloway, Milwaukee, Wis., and Stanley Le Sota, Horsham, Pa., assignors to Rohm and Haas Company, Philadelphia, Pa.

Continuation-in-part of Ser. No. 410,837, Oct. 29, 1973, abandoned, which is a continuation-in-part of Ser. No. 123,871, March 12, 1971, abandoned. This application June 9, 1975, Ser. No. 585,146

Int. Cl.[2] B32B *3/26;* B05D *5/00*

U.S. Cl. 428—315 12 Claims

1. A method for preparing crushed foam coated leather and leather substitutes which comprises:

A. Foaming a latex composition prepared from monomers of the following groups:
   i. 20–90% by weight of butyl acrylate, 2-ethylhexyl acrylate or ethylene;
   ii. 40–95% by weight of ethyl acrylate or vinyl chloride;
   iii. 20–50% by weight of methyl methacrylate, acrylonitrile, styrene or vinylidene chloride;
   iv. 10–30% by weight of methyl acrylate or butyl methacrylate;
   v. 0.1–5% by weight of acrylic acid, itaconic acid or methacrylic acid; and
   vi. 3–7% by weight of hydroxyethyl methacrylate, methylol acrylamide, acrylamide, methylol methacrylamide or acrolein, or any mixtures thereof; the sum of i–vi being 100%;
B. Coating the foam on a leather or leather substitute at a thickness in the range of from 5 to 60 mils;
C. Partially drying the foam at a temperature in the range of from 120° to 400° F. but short of curing the foam; and simultaneously or separately:
D. Crushing the partially dried foam coating to a thickness of about 3–25 mils and such that the crushed foam coating has minimal bounce back and good pattern definition upon embossment;

E. Embossing and curing the crushed foam coated leather or leather substitute at a pressure in the range of from about 50 to 2,000 psi at a temperature in the range of from 100° to 350° F.

9. A leather or leather substitute which has a crushed foam coating of a latex composition containing a copolymer prepared from monomers of the following groups:
   i. 20–90% by weight of butyl acrylate, 2-ethylhexyl acrylate or ethylene;
   ii. 40–95% by weight of ethyl acrylate or vinyl chloride;
   iii. 20–50% by weight of methyl methacrylate, acrylonitrile, styrene or vinylidene chloride;
   iv. 10–30% by weight of methyl acrylate, butyl methacrylate;
   v. 0.1–5% by weight of acrylic acid, itaconic acid or methacrylic acid; and
   vi. 3–7% by weight of hydroxyethyl methacrylate, methylol acrylamide, acrylamide, methylol methacrylamide or acrolein, or any mixtures thereof; the sum of i–vi being 100%;

said crushed foam coating having a thickness of about 3–25 mils, minimal bounce back and good pattern definition upon embossment.

4,061,823

HIGHLY MACHINABLE COTTON-PHENOLIC BASE FOR DECORATIVE ASSEMBLIES

Harold O. McCaskey, Jr., Allendale, S.C., and Salvatore E. Palazzolo, Elizabeth City, N.C., assignors to Westinghouse Electric Corporation, Pittsburgh, Pa.

Filed Dec. 11, 1975, Ser. No. 639,956

Int. Cl.[2] B32B *5/02*

U.S. Cl. 428—318 4 Claims

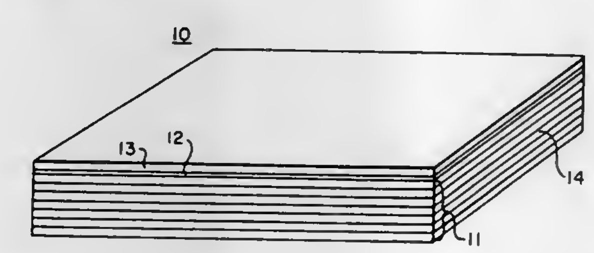

1. A consolidated, unitary decorative assembly, comprising a decorative laminate, the decorative laminate having a machined surface, said decorative laminate comprising a nonabrasive, shapeable base core of a plurality of sheets, each sheet consisting of paper consisting of cotton linter fibers in felted form having lengths between about 5 mm. and about 40 mm. and diameters between about 0.010 mm. and about 0.040 mm., impregnated with a cured phenolic resin, the base core having the property of allowing machine cutting for 500 cycles per 1½' of core edge surface without cratering a 90.0 Rockwell A hardness carbide tipped shaper blade, said core having superimposed thereon a decorative print sheet impregnated with a cured thermoset resin, and an outer protective overlay sheet impregnated with a cured thermoset resin.

4,061,824

NOVEL METAL POWDERS AND MAGNETIC TAPES PRODUCED THEREWITH

Robert J. Deffeyes, and Wesley R. Tyler, both of Arlington, Tex., assignors to Graham Magnetics Incorporated, Graham, Tex.

Continuation-in-part of Ser. No. 401,636, Sept. 28, 1973, Pat. No. 3,909,240. This application Sept. 12, 1975, Ser. No. 612,708

Int. Cl.[2] C22B *23/04;* B32B *5/16, 15/02*

U.S. Cl. 428—328 14 Claims

1. A magnetic recording member of the type utilizing a composition comprising ferromagnetic metal particles in a resin binder and coated on a support member, wherein said metal particles comprise acicular particles consisting of at least 50% by weight of cobalt and characterized by the following parameters:

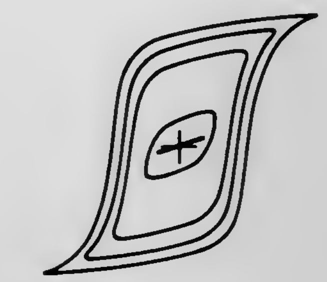

Squareness	of at least 0.72
Magnetic Moment	of at least 110
Coercivity	of at least 500
Increase in Coercivity Between 25° F. and −195° F	less than 100%

2. A metallic powder of small acicular metallic particles comprising at least 50% by weight of cobalt, said particles being characterized by the following characteristics:

acicularity	:	2:1
length	:	less than 2 microns
squareness	:	at least 0.72
coercive force	:	at least 500
sigma value	:	at least 110
stable sigma value of	:	at least 77.

4,061,825

WATER ACTIVATABLE TAPES

Patrick James Claude Counsell, and Sydney Robert Whitehouse, both of Stafford, Great Britain, assignors to Evode Holdings Limited, Stafford, Great Britain

Continuation of Ser. No. 587,259, June 16, 1975. This application Dec. 6, 1976, Ser. No. 747,823

Int. Cl.[2] C09J *7/02*

U.S. Cl. 428—355 13 Claims

1. A water-activatible tape for construction purposes which comprises a substrate of fibrous or foamed plastics material impregnated or coated with a water-reactive cementitious composition which is reactive with water to form a set mass, said cementitious composition including at least one cement and a non-water sensitive polymeric binder which binds the cement to the substrate while the tape is in its uncured state and a water-sensitive additive which is compatible with the polymeric binder and which is sufficiently water-sensitive to at least swell in contact with water.

4,061,826

FLAME-RETARDANT PRESSURE-SENSITIVE ADHESIVE COMPOSITION

Raymond J. Petras, St. Paul, and Gaylord L. Groff, North St. Paul, both of Minn., assignors to Minnesota Mining and Manufacturing Company, St. Paul, Minn.

Continuation-in-part of Ser. No. 544,964, Jan. 29, 1975, abandoned. This application June 25, 1976, Ser. No. 699,786

Int. Cl.[2] B32B *27/30;* C09J *3/14*

U.S. Cl. 428—356 15 Claims

1. A flame-retardant pressure-sensitive adhesive composition for use on electrically insulating tape that is compatable, as defined herein, with magnet wire insulation, said adhesive composition providing, when applied in a 5-mil-thickness on a polyester film backing, at least 20 ounces of adhesion to steel per inch width, and said adhesive composition comprising (1) a base pressure-sensitive adhesive material that exhibits no more than about 3 weight-percent halogen loss after weeks at 175° C and (2) at least 2.5 weight-percent of halogenated or-

ganic material that (a) is halogenated with either chlorine or bromine atoms that together constitute at least 40 weight-percent of the organic material, (b) exhibits no more than about 1 weight-percent loss when heated to 200° C in a thermogravimetric analysis performed by raising the temperature of the organic material from room temperature at a rate of 40° C/minute, (c) exhibits no more than about 3 weight-percent halogen loss after two weeks at 175° C, (d) exhibits less than 10 percent loss in overall weight after two weeks at 175° C and (e) comprises less than about 50 weight-percent of said adhesive composition.

12. A flame-retardant electrically insulating pressure-sensitive adhesive tape which is compatible, as defined herein, with magnet wire insulation and exhibits at least 20 ounces of adhesion to steel per inch width, comprising a flexible backing and at least one layer of pressure-sensitive adhesive composition united to the backing, said adhesive composition comprising (1) a base pressure-sensitive adhesive material that exhibits less than about 3 weight-percent halogen loss after two weeks at 175° C, (2) at least 2.5 weight-percent of halogenated polynuclear aromatic ether that (a) is halogenated with either chlorine or bromine atoms that together constitute at least 40 weight-percent of said ether, (b) exhibits less than 1 weight-percent loss when heated to 200° C in a thermogravimetric analysis performed by raising the temperature of said ether from room temperature at a rate of 40° C/minute, (c) exhibits less than about 3 weight-percent halogen loss after two weeks at 175° C, (b) exhibits less than 10 percent loss in overall weight after two weeks at 175° C, and (e) comprises less than about 50 weight-percent of said adhesive composition, and (3) antimony trioxide.

15. A flame-retardant electrically insulating pressure-sensitive adhesive tape which is compatible, as defined herein, with magnet wire insulation and exhibits at least 20 ounces of adhesion to steel per inch of width comprising a flexible backing and at least one layer of pressure-sensitive adhesive composition united to the backing, said adhesive composition comprising an acrylate-based pressure-sensitive adhesive and 10 to 50 weight-percent of decabromodiphenyl oxide.

4,061,827

FIBRES

Jack Gould, Harrogate, England, assignor to Imperial Chemical Industries Limited, London, England

Filed Mar. 1, 1976, Ser. No. 662,684

Claims priority, application United Kingdom, Mar. 3, 1975, 8728/75

Int. Cl.² B32B *5/16;* **H05B** *3/10, 3/18*

U.S. Cl. 428—368 **10 Claims**

1. An improved electrically conductive fibre, formed from a thermoplastic organic polymer, in which the electrical conductivity is due to electrically conductive carbon particles penetrating an outer region of the fibre, wherein the improvement comprises the fibre having a zero or positive temperature coefficient of resistance.

7. The improved conductive fibre of claim 1, wherein said polymer is a polyester, polyamide, polyacrylonitrile or modified polyacrylonitrile.

4,061,828

MODIFIED, GRAFTED MINERAL CARRIERS

Honore Mazarguil, Ramonville Saint Agne; Francois Meiller, Palaiseau, and Pierre Monsan, Toulouse, all of France, assignors to Rhone-Poulenc Industries, Paris, France

Filed Mar. 26, 1976, Ser. No. 670,899

Claims priority, application France, Apr. 4, 1975, 75.10597

Int. Cl.² B32B *19/02;* **B05D** *7/00, 7/24*

U.S. Cl. 428—403 **7 Claims**

1. A method of preparing carriers comprising grafting onto a mineral carrier, a silicon derivative, diazotizing the grafted mineral carrier, and then fixing adenine or its derivative onto the diazotized grafted mineral carrier in which the silicon derivative to be grafted is of the general formula

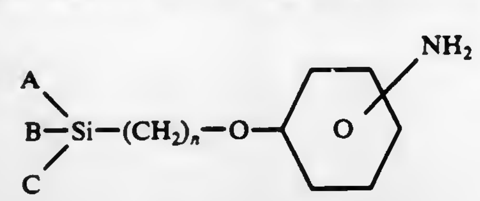

wherein A, B and C, which may be similar or different, are selected from the group consisting of methoxy, ethoxy, methyl or ethyl, provided that at least one of them is reactive with an Oh group in the mineral carrier, n being a whole number with a value from 2 to 4.

4,061,829

NEGATIVE RESIST FOR X-RAY AND ELECTRON BEAM LITHOGRAPHY AND METHOD OF USING SAME

Gary Newton Taylor, Fanwood, N.J., assignor to Bell Telephone Laboratories, Incorporated, Murray Hill, N.J.

Filed Apr. 26, 1976, Ser. No. 680,156

Int. Cl.² B05D *3/06*

U.S. Cl. 428—451 **41 Claims**

1. Article comprising a substrate coated with a radiation sensitive material, characterized in that said material consists essentially of a polymer prepared from a first monomer selected from the group consisting of monomers represented by the formula

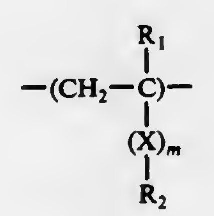

where R_1 is selected from the group consisting of H and CH_3, X is

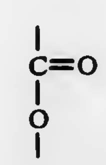

and m is 0 or 1, and R_2 is an alkyl group with the formula $C_nH_{2n-x+1}Y_x$ where n and x are equal to or greater than one, x is equal to or less than $2n + 1$, and Y is selected from the group consisting of chlorine and bromine, together with a second monomer said second monomer being a vinyl monomer, said first monomer forming between 50 percent and 100 percent by weight, of the polymer.

18. Process for pattern delineating a substrate coated with a negative resist material comprising the steps of

exposing selected portions of said resist material to radiation which causes said exposed portions to become less easily removable with respect to the unexposed portions, in which said resist consists essentially of a polymer;

removing the unexposed portions; and

processing the pattern delineated resist and substrate with processing steps that alter the bared substrate areas, characterized in that said polymer consists essentially of a polymer prepared from a first monomer selected from the group consisting of monomers represented by the formula

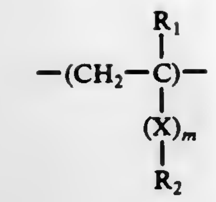

where R_1 is selected from the group consisting of H and CH_3, X is

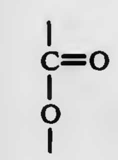

and m is 0 or 1, and R_2 is an alkyl group with the formula $C_nH_{2n-x+1}Y_x$ where n and x are equal to or greater than one, x is equal to or less than $2n+1$, and Y is selected from the group consisting of chlorine and bromine, together with a second monomer, said second monomer being a vinyl monomer, said first monomer forming between 50 percent and 100 percent by weight of the polymer.

4,061,830

SELECTIVE SOLAR ENERGY RECEIVER AND METHOD FOR ITS PRODUCTION

Charles B. Greenberg, Murrysville, Pa., assignor to PPG Industries, Inc., Pittsburgh, Pa.

Filed Dec. 23, 1975, Ser. No. 643,724

Int. Cl.² F24J *3/02*

U.S. Cl. 428—469 **13 Claims**

1. A method for producing a solar energy receiving surface comprising the steps of:

a. cleaning a surface of an aluminum substrate; and

b. contacting the surface of the substrate with an alkaline coating solution consisting essentially of:

a water soluble salt of a metal selected from the group consisting of nickel, zinc, silver, cadmium, copper cobalt, lead, tin, iron, and combinations thereof;

a complexing agent for the selected metal;

a sulfur compound capable of reacting with the selected metal to form a sulfide; and

water

to form a uniform metal sulfide coating.

4,061,831

THERMAL RECORDING SYSTEM

Kenneth J. Quast, Milford, N.H., assignor to Bard Laboratories, Inc., Amherst, N.H.

Filed Apr. 13, 1976, Ser. No. 676,425

Int. Cl.² B32B *27/36, 29/00*

U.S. Cl. 428—480 **20 Claims**

17. In a method for recording on a thermally responsive sheet employing selective thermal activation of an amine-polyketo color compound system to produce a visible mark, the improvement comprising conducting, upon said thermal activation, a redox reaction between a cyclic polyketo compound in reversibly reduced form and an N-substituted thiuram polysulfide to reductively decompose said thiuram polysulfide and to oxidize said reduced polyketo compound to provide, respectively, cyclic polyketo compound and reactive amine components of an amine-cyclic polyketo color compound system responsive to said thermal activation.

4,061,832

POSITIVE-WORKING ELECTRON RESISTS

Edward D. Roberts, Purley, England, assignor to U.S. Philips Corporation, New York, N.Y.

Filed Mar. 19, 1976, Ser. No. 668,486

Claims priority, application United Kingdom, Mar. 20, 1975, 11660/75

Int. Cl.² B05D *3/06*

U.S. Cl. 428—500 **4 Claims**

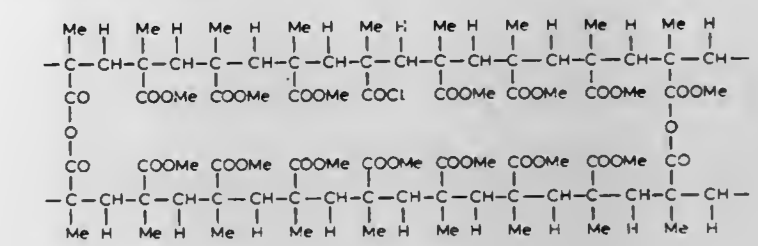

1. A positive-working electron resist produced by forming then drying and heating, at a temperature of from 150°-250° C in a moist atmosphere containing from 0.5-20% by volume of water vapor, a coating of an inert solvent solution of a polymeric substance, said polymeric substance consisting essentially of the copolymer B-D wherein

B represents an unsaturated organic compound of the formula

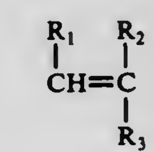

and D represents an unsaturated carboxylic acid chloride of the formula

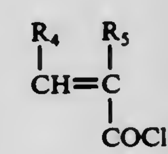

wherein any of R_1, R_2, R_4 and R_5, is a hydrogen atom, an aryl group or an alkyl group, R_3 represents an alkyl group, a saturated acyloxy group, an aryl group or a —COOR group in which R is an alkyl group, and wherein the co-polymer contains 0.5–30 mol.% of D.

4,061,833

LATEX COATINGS FOR ELECTROGRAPHIC SHEETS

Ronald R. Pelletier, Bay City; Robert D. Hansen, Midland, and James J. Vanderbush, Edenville, all of Mich., assignors to The Dow Chemical Company, Midland, Mich.

Division of Ser. No. 415,922, Nov. 14, 1973, abandoned. This application Jan. 6, 1976, Ser. No. 646,806

Int. Cl.² B05D *3/02;* **B32B** *23/08, 27/10*

U.S. Cl. 428—511 **6 Claims**

1. An electrostatic sheet suitable for electrographic printing comprising a substrate in the form of a flexible or rigid sheet having adhered to at least one surface thereof a continuous dielectric film consisting essentially of a copolymer of from about 0.5 percent to about 8 percent of methacrylic acid of maleic acid and the balance consisting essentially of (a) a styrene compound and (b) a conjugated diene hydrocarbon or an alkyl ester of acrylic acid or of methacrylic acid; said alkyl ester having from 1 to 18 carbon atoms in the alkyl.

4,061,834
DURABLE ANTISTATIC COATING FOR POLYMETHYLMETHACRYLATE
Vaclav Hadek; Robert B. Somoano, both of La Canada, and Alan Rembaum, Altadena, all of Calif., assignors to The United States of America as represented by the Administrator of the National Aeronautics and Space Administration, Washington, D.C.
Filed June 3, 1976, Ser. No. 692,284
Int. Cl.² B05D *5/06*; C09K *3/16*
U.S. Cl. 428—522 **8 Claims**

1. A method of providing a durable, optically clear, transparent, antistatic coating on the surface of a transparent solid polymethacrylate article comprising the steps of:
applying to the surface of the article at a temperature of no more than 40° C a low molecular weight, polar, organic solvent having high electron affinity selected from the group consisting of nitromethane or acetonitrile, to form an antistatic coating comprising a surface layer of said article having at least 0.05% by weight of said solvent retained therein; and
drying said surface.

4,061,835
PROCESS OF FORMING A POLYPROPYLENE COATED SUBSTRATE FROM AN AQUEOUS SUSPENSION OF POLYPROPYLENE PARTICLES
Wassily Poppe, Lombard, and Ivor R. Fielding, Naperville, both of Ill., assignors to Standard Oil Company (Indiana), Chicago, Ill.
Division of Ser. No. 553,891, Feb. 27, 1975. This application June 25, 1976, Ser. No. 699,697
Int. Cl. B32B *27/30, 27/32*
U.S. Cl. 428—522 **13 Claims**

1. The method of forming a coated substrate, which comprises depositing an aqueous coating composition comprising a dispersion of a resinous polymer of an alpha, beta-ethylenically unsaturated carboxylic acid compound and suspended particles of a resinous polymer of propylene to a substrate and fusing the resinous polymer of propylene at a temperature of from about 190° to 250° C. until the resinous polymer of propylene coalesces, wherein said resinous addition polymer of an alpha, beta-ethylenically unsaturated carboxylic acid compound comprises at least one member selected from the group consisting of alpha, beta-ethylenically unsaturated carboxylic acid and alpha, beta-ethylenically unsaturated carboxylic ester, and is present in a concentration of from about 5 to 200 parts by weight per each 100 parts by weight resinous polymer of propylene, said resinous polymer of propylene contains at least 75% by weight propylene, said particles have a maximum average particle diameter size of 500 microns, and the polymeric components of said coating composition comprise from 10 to 75 parts by weight per each 100 parts by weight of the coating composition.

4,061,836
THERMOGRAPHIC RECORDING SYSTEM
Albert P. Yundt, Medfield, Mass., assignor to Bard Laboratories, Inc., Amherst, N.H.
Filed Apr. 13, 1976, Ser. No. 676,426
Int. Cl.² B32B *29/00*; B05D *3/02*
U.S. Cl. 428—537 **13 Claims**

9. In a method for recording on a thermally responsive sheet employing selective thermal activation of an amine-polyketo color compound system to produce a visible mark, the improvement comprising conducting, upon said thermal activation, a redox reaction between a cyclic polyketo compound in reversibly reduced form and an N,N' polythiodiamine to reductively decompose said N,N' polythiodiamine and to oxidize said reduced polyketo compound to provide, respectively, cyclic polyketo compound and reactive amine components of an amine-cyclic polyketo color compound system responsive to said thermal activation.

4,061,837
PLASTIC-METAL COMPOSITE AND METHOD OF MAKING THE SAME
Irving J. Hutkin, 5284 Stonecourt, San Diego, Calif. 92115
Filed June 17, 1976, Ser. No. 697,204
Int. Cl.² B32B *15/08, 15/20*
U.S. Cl. 428—609 **8 Claims**

1. An improved plastic-metal unitary circuit composite having reduced staining and line lifting characteristics, said composite comprising, in combination:
a. copper foil, a side thereof having a rough irregular surface with improved bondability to plastic but substantial staining characteristics;
b. a layer about 5 to about 80 microinches thick of metal selected from the group consisting of cadmium, cadmium alloy of tin, cadmium alloy of zinc, cadmium alloy of copper, encapsulating said rough irregular surface without substantially depreciating said bondability; and,
c. a plastic substrate bonded to said encapsulating layer.

4,061,838
APPARATUS FOR CONTROLLING THE ELECTROLYTE CONCENTRATION OF FUEL CELL BATTERIES
Philipp Jäger, Erlangen, Germany, assignor to Siemens Aktiengesellschaft, Munich, Germany
Filed Apr. 12, 1976, Ser. No. 675,967
Claims priority, application Germany, Apr. 29, 1975, 2519098
Int. Cl.² H01M *8/08*
U.S. Cl. 429—22 **4 Claims**

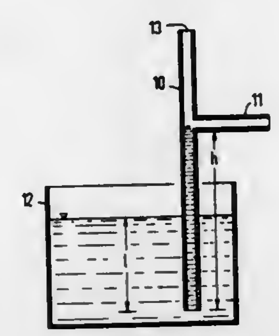

1. Apparatus for controlling the electrolyte level and electrolyte concentration of a fuel cell battery, comprising:
a. an electrolyte vessel in the electrolyte loop of the fuel cell battery; and
b. a tube, open on both sides, immersed in the electrolyte vessel with its upper end available for coupling to the reaction water depleted in the fuel cell battery, said tube having an overflow at a distance h from the lower end of said tube where h is selected such that $h = l \cdot \gamma_1/\gamma_o$ where l is the immersion depth of said tube in said electrolyte vessel, γ_1 is the density of the electrolytic liquid and γ_o is the density of the depleted reaction water, said overflow being above the level of the electrolyte in said electrolyte vessel.

4,061,839
WARNING DEVICE FOR INDICATING CRITICAL CONDITION OF STARTER BATTERIES IN VEHICLES
Werner Köbler, Stuttgart, Germany, assignor to Daimler-Benz Aktiengesellschaft, Germany
Filed Oct. 6, 1972, Ser. No. 295,489
Claims priority, application Germany, Oct. 9, 1971, 2150477
Int. Cl.² H01M *10/48*
U.S. Cl. 429—93 **25 Claims**

1. A warning installation for indicating a critical charge condition of starter batteries in vehicles, especially in motor vehicles, according to the areometer principle, characterized

by an areometer housing means connected with the interior space of a battery housing means by way of aperture means, float means movable in said areometer housing means, a coil disposed in said areometer housing means and protected against the battery acid, warning means connected to said coil, a core of magnetizable material connected with said float means, said float means being arranged for sinking in said areometer housing means when the acid concentration falls below a predetermined level so that said core is immersed within said coil, said coil being responsive to the immersing of said core therein for changing the inductance thereof and triggering said warning means to provide at least one of an acoustic and opti-

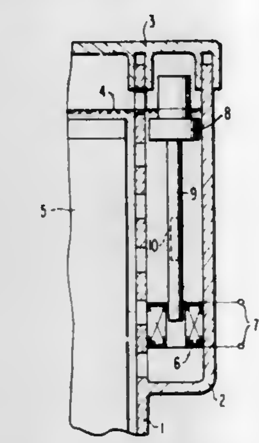

cal warning signal indicating that the acid concentration of the battery is below the predetermined level, the coil forming part of a tuned circuit of an oscillator means connected thereto, said tuned circuit being tuned to resonance upon immersion of the core into the coil, thereby causing the oscillator means to generate a signal with a frequency corresponding to the resonance of the tuned circuit, the signal being amplified in an amplifier connected in the output of the oscillator means and the amplified signal triggering a warning signal in an indicating means connected to the amplifier, a delay means being connected in front of the indicating means which prevents the triggering of a warning signal as a result of a sinking of the float means caused by vibrations.

4,061,840
SODIUM SULPHUR CELLS
Ivor Wynn Jones; Graham Robinson, and Thomas Lewis Bird, all of Chester, England, assignors to The Electricity Council, London, England
Continuation-in-part of Ser. No. 550,072, Feb. 14, 1975, Pat. No. 3,982,957. This application Sept. 9, 1976, Ser. No. 721,907
Claims priority, application United Kingdom, Feb. 15, 1974, 4884/74
The portion of the term of this patent subsequent to Sept. 28, 1993, has been disclaimed.
Int. Cl.² H01M *10/39*
U.S. Cl. 429—104 **7 Claims**

1. In a sodium sulphur cell having a current collector in contact with the cathodic reactant, the improvement wherein said current collector is formed of an impermeable carbon or graphite tube, a conductive solid metal core within the carbon or graphite tube, and graphite felt around said core constitut-

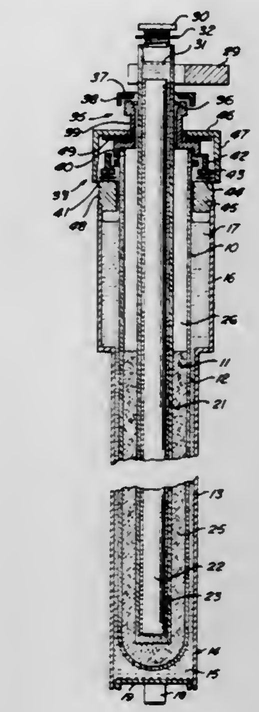

ing a deformable conductive interface between the surface of the core and the internal surface of the tube.

4,061,841
FEEDTHROUGH ASSEMBLY FOR LITHIUM-IRON SULFIDE CELL
Ram A. Sharma, Sterling Heights; Walter J. Wright, Utica, and Richard A. Murie, Sterling Heights, all of Mich., assignors to General Motors Corporation, Detroit, Mich.
Filed Apr. 15, 1977, Ser. No. 787,875
Int. Cl.² H01M *6/36*
U.S. Cl. 429—112 **4 Claims**

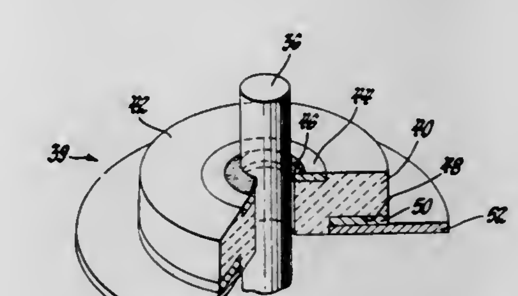

1. In an electrochemical cell comprising electrodes encased within a housing, there being a metallic rod comprised of molybdenum extending through the housing, said rod being in electrical connection with one electrode of the cell and serving as one terminal of the cell, a sealing and insulating construction for insulating the metallic rod from and bonding the rod to the outer housing comprising
an electrically insulating body comprising a material selected from the group consisting of aluminum nitride, yittria, or mixtures thereof surrounding said rod and insulating it from said housing,
a first molybdenum body which is integrally bonded to the insulating body and surrounding the rod and which is welded to said rod, and
a second molybdenum body which is integrally bonded to the insulating body and surrounding the rod but spaced apart and electrically insulated from both the rod and the first molybdenum body, and is bonded to the housing, said construction, the terminal rod and the outer housing, together with the bonds between them cooperating to produce a hermetic seal.

4,061,842
FAIL SAFE BATTERY
David G. Evans, Hackettstown, N.J., assignor to The United States of America as represented by the Secretary of the Army, Washington, D.C.
Filed Nov. 26, 1976, Ser. No. 744,901
Int. Cl.^{2} H01M *6/38*
U.S. Cl. 429—116 **1 Claim**

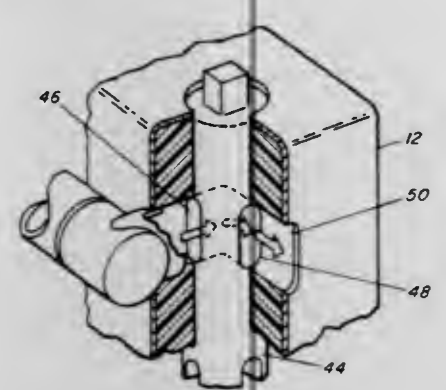

1. A delay action battery comprising:
a casing;
a plurality of cell plates mounted in said casing;
a reservoir for electrolyte mounted externally to said casing;
a conduit communicating with said reservoir and said casing containing said cell plates;
a rupturable partition means for retaining said electrolyte in said reservoir isolated from said cell plates; and
means for pressurizing said electrolyte to rupture said partition means and cause said electrolyte to enter said casing and activate said cell plates,
wherein said reservoir being a tubular container having said rupturable partition means positioned at one end, a closure means at the other end and an explosive charge for rupturing said closure means and pressurizing said electrolyte, and
wherein said tubular container is provided with at least one blow out plug adapted to be removed on exposure at elevated temperatures.

4,061,843
BATTERY PLATES
Stanley Charles Foulkes, Bolton, England, assignor to Chloride Group Limited, London, England
Continuation-in-part of Ser. No. 623,897, Oct. 20, 1975. This application Dec. 23, 1975, Ser. No. 643,908
Claims priority, application United Kingdom, Dec. 23, 1974, 55500/74; Oct. 15, 1975, 42226/75
Int. Cl.^{2} H01M *2/18*
U.S. Cl. 429—136 **3 Claims**

1. A lead acid tubular battery plate comprising a porous envelope enclosing a lead or lead alloy current collector comprising an array of members extending perpendicularly from an end member which affords a current take off lug with lead oxide active material disposed between the perpendicular current collector members and the inside face of the porous envelope characterised in that the ratio of the length of the tubes in cms to the free cross sectional area in sq. cms is in the range 100:1 to 295:1 and the degree of stratification of the active material in the tubes is less than 5%.

4,061,844
DYESTUFF ACCEPTOR FOR SYNTHETIC RESINS
Iko Itoh; Yasuhiko Inoue, and Kenji Nagaoka, all of Niihama, Japan, assignors to Sumitomo Chemical Company, Limited, Japan
Continuation of Ser. No. 427,714, Dec. 26, 1973, abandoned. This application May 6, 1975, Ser. No. 575,043
Claims priority, application Japan, Dec. 28, 1972, 47-1392
Int. Cl.^{2} C08K *5/56, 5/57*
U.S. Cl. 526—4 **17 Claims**

1. A dyestuff acceptor of synthetic resins, comprising as essential components (A) a copolymer comprising about 20 to 99 mole % of at least one ethylenically unsaturated monomer which is not an aminoalkyl acrylate compound and about 1 to 80 mole % of an aminoalkyl acrylate compound represented by the formula,

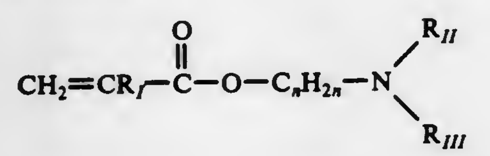

wherein R_I is hydrogen or methyl, R_{II} and R_{III} each are hydrogen or alkyl having 1 to 4 carbon atoms, and n is an integer from 1 to 4, and (B) a compound of a polyvalent element selected from silicon and tin, having at least one functional group selected from the group consisting of carboxyl, thioalkoxy, alkyl, phenyl and cyclopentadienyl, the weight ratio of said component (A) to said component (B) being about 100:1 to 1:1.

4,061,845
COPOLYMERS OF HYDRAZIDES AND CERTAIN UNSATURATED ESTERS
Hubert J. Fabris, Akron; David P. Gruber, Cuyahoga Falls; David R. Sponseller, Akron, and Heinz Uelzmann, Tallmadge, all of Ohio, assignors to The General Tire & Rubber Company, Akron, Ohio
Filed Nov. 4, 1976, Ser. No. 738,775
Int. Cl.^{2} C08G *67/00, 69/00, 18/10*
U.S. Cl. 526—11.1 **10 Claims**

1. A reactive composition useful in forming polymeric coatings and adhesives and comprising a copolymer of:
a. a hydrazide having the formula R(C(O)—NH—NHR')*a* where a is a number from 1 to 10, each (O) is a carbonyl oxygen atoms, R is selected from the group consisting of —R', —OR', —NR'$_2$, —NHNHR', —C(O)NHNHR' and polyvalent organic radicals having molecular weights of from 14 to 15,000, and each R' is a hydrogen atom or a monovalent organic radical having a molecular weight of from 14 to 450 and being free of functions which react with methyl acrylate at 80° C., and
b. an unsaturated organic ester having from 1 to 5 aliphatic double bonds activated by a carbonyl group, the average number of said carbonyl-activated double bonds being greater than one, and having a molecular weight of from about 71 to 12,000.

4,061,846
FLEXIBLE WATER SWELLABLE CROSSLINKED POLYACRYLATE FILM
James R. Gross, Lake Jackson, and Russell T. McFadden, Freeport, both of Tex., assignors to The Dow Chemical Company, Midland, Mich.
Division of Ser. No. 450,650, March 13, 1974, Pat. No. 3,926,891. This application June 30, 1975, Ser. No. 591,741
Int. Cl.^{2} C08L *31/02, 33/02;* **B29D** *7/02*
U.S. Cl. 526—16 **1 Claim**

1. A flexible water swellable crosslinked polyacrylate film produced by the method which comprises
A. applying a coating on an impervious substrate wherein the coating comprises a crosslinkable aqueous solution which is prepared by forming a polyacrylate solution having about 30 to about 70 weight percent alkali metal carboxylates by dissolving in an aqueous alkali metal hydroxide solution a polyacrylate comprising
1. about 30 to about 92 percent by weight of an alkyl acrylate wherein the alkyl group has 1–10 carbon atoms, an alkyl methacrylate wherein the alkyl group has 4–10 carbon atoms, or mixtures thereof,
2. about 8 to about 50 percent by weight of an olefinically unsaturated carboxylic acid, and
3. about 0 to about 15 percent by weight of an omega hydroxy-alkyl acrylate having 1–4 carbon atoms in the hydroxy alkyl group,
heating the solution until saponification is complete, and adding to said solution about 0.1 to about 10 weight percent, based on the dissolved polymer of a water soluble crosslinking agent which is reactive with carboxylate salt groups
B. heating said coated substrate to a temperature greater than about 30° C to crosslink said polyacrylate, and
C. separating said crosslinked film from said substrate.

4,061,847
ETHYLENE POLYMER ACIDIFICATION PROCESS
Richard H. Hughes, Overland Park; Donald R. Jamieson, Merriam, both of Kans., and Rajindar K. Kochhar, Katy, Tex., assignors to Gulf Research & Development Company, Pittsburgh, Pa.
Continuation of Ser. No. 48,436, June 22, 1970, abandoned. This application Apr. 12, 1973, Ser. No. 350,557
Int. Cl.^{2} C08F *8/30, 8/44*
U.S. Cl. 526—49 **2 Claims**

1. A method for chemically modifying at least the surface of a film of an ethylene copolymer containing pendant metallic carboxylate salt groups without changing the physical form of said film which consists essentially of, in combination,
1. immersing a film of an ethylene copolymer containing pendant metallic carboxylate salt groups into an aqueous ammonium hydroxide solution containing 0.5 to 28 weight % ammonia,
2. maintaining said film in said aqueous ammonium hydroxide solution at ambient temperature for a period of 1 to 30 minutes,
3. removing said film from said aqueous ammonium hydroxide solution,
4. drying the film from (3), and
5. recovering a film in which a substantial proportion of the pendant metallic carboxylate salt groups of the ethylene copolymer has been converted to the corresponding carboxylic acid groups;

said ethylene copolymer consisting of at least 67 mol % of polymerized ethylene and containing from 0.01 to 0.5 mol of pendant metallic carboxylate salt groups, per mol of ethylene, the metallic cation of the carboxylate salt groups being selected from the group consisting of metallic cations which are soluble in water or which form a water-soluble complex with ammonia.

4,061,848
PROCESS FOR COOLING A POLYMERIZATION REACTOR
Eberhard Sistig, Marl, and Karl-Heinz Reinermann, Dulmen, both of Germany, assignors to Chemische Werke Huls Aktiengesellschaft, Germany
Filed Feb. 5, 1976, Ser. No. 655,449
Claims priority, application Germany, Feb. 5, 1975, 2504659
Int. Cl.^{2} C08F *2/04, 2/18, 2/22, 2/12*
U.S. Cl. 526—61 **11 Claims**

1. In a process for cooling a polymerization reaction of compounds in a dispersion and/or solution with a polymerization reactor equipped with a reflux condenser, wherein the cooling is executed by evaporation of one or more liquids contained in the dispersion and/or solution, by condensation of vapors in the reflux condenser, and by recycling of the thus-condensed vapors into the reactor, and by cooling of the reactor with a controllable flow of coolant the improvement wherein a portion of said coolant is passed through said reflux

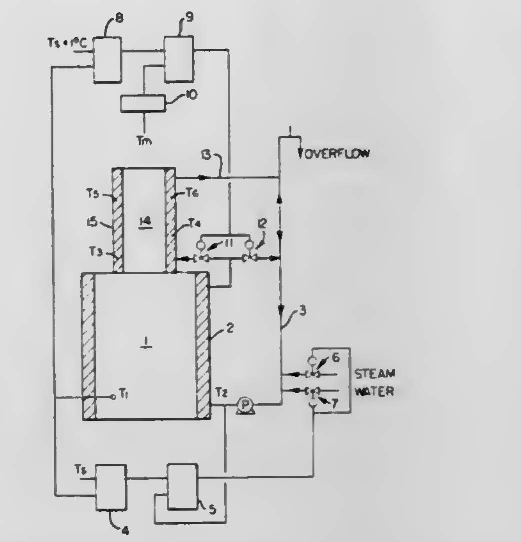

condenser and the amount of heat given off during condensation in said reflux condenser provides the control variable for a controller for controlling the amount of coolant fed into the reflux condenser.

4,061,849
PROCESS FOR THE RECOVERY OF GASEOUS OR VAPOROUS MONOMERS FROM REACTION OFF-GASES
Alfred Muenster, Ludwigshafen, Germany, assignor to BASF Aktiengesellschaft, Ludwigshafen (Rhine), Germany
Filed Mar. 25, 1976, Ser. No. 670,249
Claims priority, application Germany, Mar. 29, 1975, 2514126
Int. Cl.^{2} C08F *2/18, 6/00*
U.S. Cl. 526—68 **10 Claims**

1. A polymerization process in which a low-boiling olefinically unsaturated monomer having a boiling point at atmospheric pressure between −20° and 40° C is homopolymerized in a liquid material having a boiling point above 50° C at atmospheric pressure, and in which a reaction off-gas is generated containing from 10 to 50 percent by volume of the low-boiling olefinically unsaturated monomer, wherein the reaction off-gas is treated with a liquid material which boils above 50° C at atmospheric pressure and is selected from the group consisting of a solution of the low-boiling monomer in an inert organic solvent, an aqueous emulsion of the low-boiling monomer and an aqueous suspension of the low-boiling monomer, under conditions such that said material does not react with the low-boiling monomer, whereby low-boiling monomer is extracted from the reaction off-gas, and the resulting liquid material containing low-boiling monomer is employed in the polymerization process for manufacture of further amounts of polymer.

4,061,850
EMULSION POLYMERIZATION OF CHLOROPRENE IN THE PRESENCE OF A POLYSULFIDE MODIFIER
Morris S. Edmondson, Alvin, Tex., assignor to Petro-Tex Chemical Corporation, Houston, Tex.
Division of Ser. No. 541,237, Jan. 15, 1975, Pat. No. 3,923,763, which is a continuation-in-part of Ser. No. 289,521, Sept. 15, 1972, abandoned. This application Aug. 18, 1975, Ser. No. 605,309
Int. Cl.^{2} C08F *2/00, 34/00, 36/18, 236/18*
U.S. Cl. 526—220 **4 Claims**

1. A process for the emulsion polymerization of chloroprene which comprises polymerizing polymerizable monomer, consisting essentially of chloroprene and less than 15 mol percent of a comonomer, in the presence of from about 0.05 to 5 parts

by weight per 100 parts of polymerizable monomer of a modifier having the formula

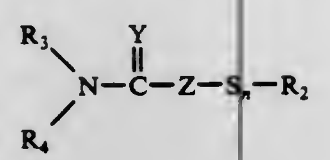

and mixtures thereof wherein R_2 is a hydrocarbon radical having from 1 to 8 carbon atoms or is a radical the same as

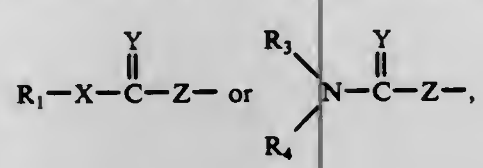

R_3 and R_4 are selected from the group consisting of hydrocarbon radicals having from 1 to 8 carbons or hydrogen with at least one of R_3 and R_4 not being hydrogen, X, Y and Z are selected from the group consisting of oxygen and sulfur, R_1 is a hydrocarbon radical having from 1 to 8 carbon atoms, and *n* is 1 to 4.

4,061,851
7-AMINO-7-ARYLTHIO CEPHALOSPORINS
Joseph Edward Dolfini, and Ekkehard Bohme, both of Cincinnati, Ohio, assignors to E. R. Squibb & Sons, Inc., Princeton, N.J.
Division of Ser. No. 651,742, Jan. 23, 1976, Pat. No. 4,026,886, which is a division of Ser. No. 480,789, June 19, 1974, Pat. No. 3,954,744, which is a division of Ser. No. 260,620, June 7, 1972, Pat. No. 3,840,533, and a continuation-in-part of Ser. No. 174,510, Aug. 24, 1971, abandoned. This application Jan. 17, 1977, Ser. No. 760,215
Int. Cl.² C07D *501/18;* **A61K** *31/545*
U.S. Cl. 544—21 **7 Claims**

1. A compound of the formula:

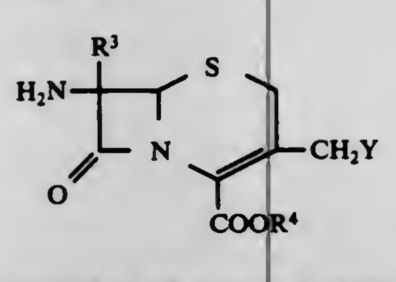

wherein R^3 is selected from the group consisting of phenylthio and substituted phenylthio wherein said substituent is selected from the group consisting of halogen, hydroxy, amino, nitro, and lower alkyl; R^4 is selected from the group consisting of hydrogen, lower alkyl, trichloroethyl, benzyl, methoxybenzyl, and benzhydryl; and Y is selected from the group consisting of hydrogen, acetoxy, pyridinium, and hydroxy; and pharmaceutically acceptable salts thereof.

4,061,852
7-METHOXY FURYLUREIDOCEPHALOSPORINS
Joseph Edward Dolfini, Princeton, N.J., assignor to E. R. Squibb & Sons, Inc., Princeton, N.J.
Continuation of Ser. No. 390,839, Aug. 23, 1973, abandoned. This application Feb. 6, 1976, Ser. No. 655,652
The portion of the term of this patent subsequent to Aug. 31, 1993, has been disclaimed.
Int. Cl.² C07D *501/36*
U.S. Cl. 544—27 **11 Claims**

1. A compound of the formula

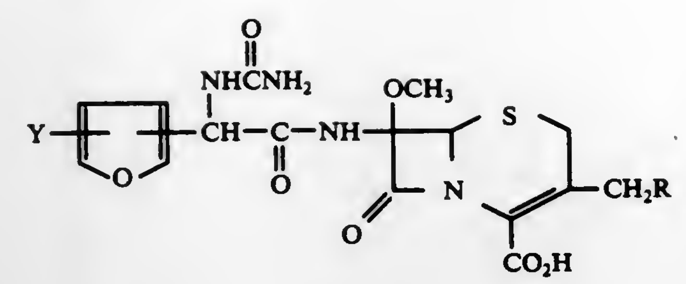

wherein the 7-methoxy group occupies the α-configuration; R is

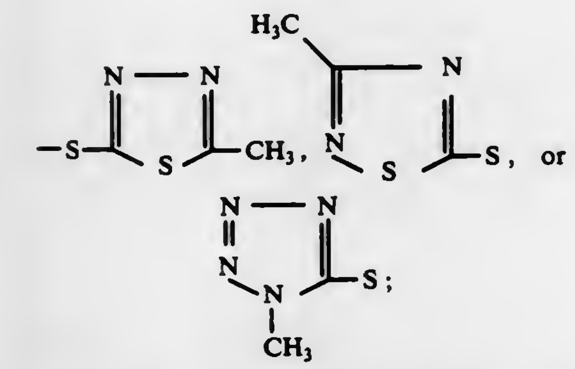

Y is H, Cl, Br, I, nitro, phenyl or methylsulfonyl; and pharmaceutically acceptable salts thereof, alkyl esters of 1 to 3 carbon atoms thereof, t-butyl ester, benzhydryl ester, haloalkyl esters of 1 to 3 carbon atoms thereof, or acyloxymethyl esters thereof wherein the acyl radical is alkanoyl of from 1 to 5 carbon atoms, benzoyl or phenacetyl.

4,061,853
VIRTUALLY SOLVENT-FREE CRYSTAL FORM OF THE SODIUM SALT OF CEPHACETRIL
Jakob Urech, Basel, Switzerland, assignor to Ciba-Geigy Corporation, Ardsley, N.Y.
Filed Nov. 1, 1976, Ser. No. 737,376
Claims priority, application Switzerland, Dec. 9, 1975, 15974/75
Int. Cl.² C07D *501/26*
U.S. Cl. 544—30 **9 Claims**

9. A virtually solvent-free crystal form of the sodium salt of Cephacetril, which, using a Cu:K_α radiation source, has the following X-ray diffraction spectrum:

Interplanar spacings d in A	Relative line intensities I
15.2	m
10.7	m
7.86	m
7.60	w
7.03	m
5.04	m-st
4.94	w
4.65	st
4.39	st
4.10	vst
4.01	m
3.66	m
3.59	vw
3.50	st
3.36	vw
3.30	m
3.18	m
3.11	vw
3.04	w
3.02	w
2.96	w
2.88	w

the relative line intensities indicated having the following meanings: *vst* = very strong, *st* = strong, *m* = medium, *w* = weak and *vw* = very weak.

4,061,854
DIHYDROETHANOANTHRACENE DERIVATIVES USEFUL AS ANTIDEPRESSANTS
Masayuki Narisada, Ibaraki, Japan, assignor to Shionogi & Co., Ltd., Osaka, Japan
Filed June 4, 1976, Ser. No. 692,941
Claims priority, application Japan, June 12, 1975, 50-71645; June 12, 1975, 50-71646
Int. Cl.² C07D *265/08*
U.S. Cl. 544—88 **9 Claims**

1. A member selected from the group consisting of
1. a compound of the formula

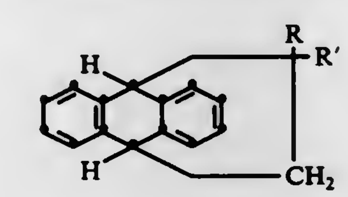

wherein
R represents hydrogen or C_1–C_4 alkyl, and
R′ represents

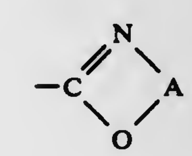

wherein
A represents a member of the group consisting of C_2–C_4 alkylene and C_2–C_4 alkylene substituted by one or two C_1–C_4 alkyl moieties or by phenyl, and
2. a pharmaceutically acceptable acid addition salt thereof.

4,061,855
PYRIMIDIN-6-YL ACETHYDROXAMIC ACIDS
Claude P. Fauran, Paris; Jeannine A. Eberle, Chatou; Guy R. Bourgery, Colombes; Guy R. Raynaud, Paris, and Claude J. Gouret, Meudon, all of France, assignors to Delalande S.A., Courbevoie, France
Division of Ser. No. 554,532, March 3, 1975, Pat. No. 4,013,768. This application Dec. 10, 1976, Ser. No. 749,221
Claims priority, application France, Mar. 19, 1974, 74.09235
Int. Cl.² C07D *413/12;* **A61K** *31/535*
U.S. Cl. 544—122 **6 Claims**

1. A compound having the formula

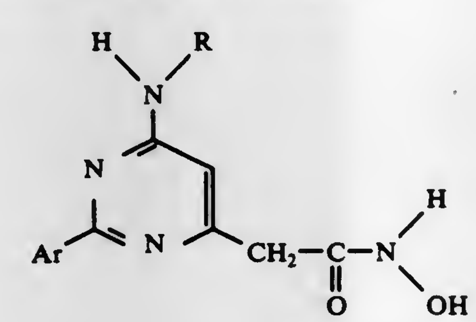

wherein R is

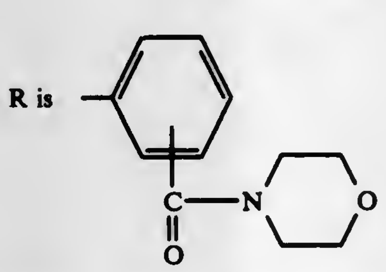

and Ar is phenyl substituted by one chloro, one fluoro, one trifluoromethyl, one methylenedioxy or one or more methoxy.

6. A composition for treating a condition of circulatory insufficiency, gastro-duodenal ulcers, respiratory insufficiency, hypertension, edema, depression, pain, inflammation or cerebral deficit, comprising an effective amount of a compound as claimed in claim 1 for treating the condition, together with a therapeutically acceptable carrier.

4,061,856
TRIMERIZATION OF AROMATIC NITRILES
Li-Chen Hsu, Cleveland, Ohio, assignor to The United States of America as represented by the Administrator of the National Aeronautics and Space Administration, Washington, D.C.
Filed Oct. 10, 1974, Ser. No. 513,613
Int. Cl.² C07D *251/24*
U.S. Cl. 544—193 **13 Claims**

1. A process for preparing an aromatic 1, 3, 5-triazine compound from an aromatic nitrile compound which comprises heating the aromatic nitrile compound to a temperature in the range of from about 100° C. to about 700° C. in the presence of a catalyst consisting essentially of a compound or mixture of compounds from at least one of the following groups:
A. organic sulfonic and sulfinic acids,
B. organic phosphonic and phosphinic acids, and
C. metallic acetylacetonates, at a pressure in the range of from about atmospheric pressure to about 10,000 p.s.i.

4,061,857
PROCESS FOR PREPARING POLYOLEFINS
Nobuyuki Kuroda, Yokohama; Takeichi Shiraishi, Kawasaki; Akio Itoh, Yokosuka; Kazuo Matsuura, Kawasaki, and Mituji Miyoshi, Kanagawa, all of Japan, assignors to Nippon Oil Company Ltd., Tokyo, Japan
Filed May 6, 1976, Ser. No. 683,965
Claims priority, application Japan, May 15, 1975, 50-56747
Int. Cl.² C08F *4/02, 10/02*
U.S. Cl. 526—114 **10 Claims**

1. A process for preparing polyolefins which comprises polymerizing or copolymerizing olefins using as catalyst a solid carrier component containing a titanium compound and-/or a vanadium compound, and an organoaluminum compound and/or an organozinc compound, said solid component being obtained by copulverizing (1) a magnesium dihalide and/or a mangenese dihalide, (2) an aluminum oxyhalide and (3) a titanium compound and/or a vanadium compound.

4,061,858
PURIFYING ACRYLONITRILE FOR THE MANUFACTURE OF ACRYLONITRILE POLYMERS
Hans Wild, Frankenthal; Rudolf Jung, Worms; Adolf Echte, Ludwigshafen; Johann Zizlsperger, Schriesheim, and Hermann Gausepohl, Mutterstadt, all of Germany, assignors to BASF Aktiengesellschaft, Ludwigshafen, Germany
Filed July 9, 1976, Ser. No. 703,955
Claims priority, application Germany, Aug. 1, 1975, 2534399
Int. Cl.² C08F *6/00, 20/44;* **C07C** *121/30*
U.S. Cl. 526—67 **16 Claims**

1. A process for the purification of monomeric acrylonitrile or an acrylonitrile-containing monomer mixture to be used in the manufacture of an acrylonitrile polymer, which process comprises treating said monomeric acrylonitrile or a mixture of acrylonitrile and another copolymerizable monomer with an alkaline-reacting compound, and then distilling under a pressure of from 20 to 150 mm of Hg and at a temperature of from 15 to 90° C.

4,061,859
VISCOSITY REDUCTION OF CELLULOSE DERIVATIVES
Wen-Jiu Cheng, Midland, Mich., assignor to The Dow Chemical Company, Midland, Mich.
Filed June 14, 1976, Ser. No. 695,876
Int. Cl.² C08B *3/22, 3/24, 11/20*
U.S. Cl. 536—88 **10 Claims**

1. In the process wherein a cellulosic ether or ester is contacted as an essentially dry powder with hydrogen halide at

about ambient to 80° C and is thereby converted to a corresponding ether or ester of substantially lower molecular weight, the improvement wherein the lower molecular weight product is contacted as an essentially dry powder with SO_2 gas at about ambient temperature, thereby inhibiting yellowing of said product.

4,061,860
STILBENE COMPOUNDS

Géza Kormány, Allschwil; Guglielmo Kabas, Aesch; Hans Schläpfer, and Adolf Emil Siegrist, both of Basel, all of Switzerland, assignors to Ciba-Geigy Corporation, Ardsley, N.Y.
Filed Aug. 6, 1975, Ser. No. 601,881
Claims priority, application Switzerland, Aug. 14, 1974, 11108/74
Int. Cl.² C07D *413/10*
U.S. Cl. 542—462 **18 Claims**

1. Stilbene compounds of the formula

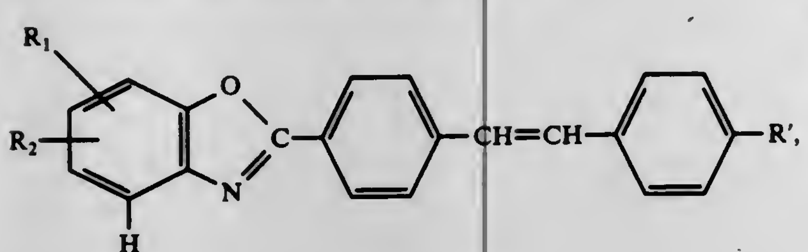

wherein R_1 denotes hydrogen, chlorine, alkyl with 1 to 8 carbon atoms, alkoxy with 1 to 4 carbon atoms, alkoxycarbonyl with 1 to 4 carbon atoms in the alkoxy rest, cyanoalkyl, alkylsulphonyl, phenylalkyl with 1 to 3 carbon atoms in the alkyl part, sulfamoyl, cyclohexyl, phenyl, phenylsulphonyl or benzyl, R_2 denotes hydrogen or alkyl with 1 to 4 carbon atoms and R′ denotes a radical

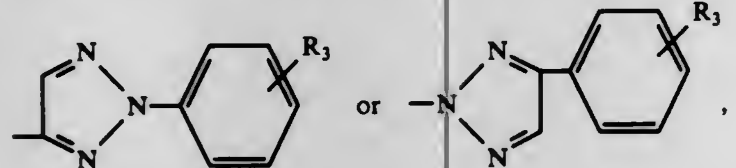

wherein R_3 represents hydrogen, chlorine, alkyl with 1 to 4 carbon atoms, alkoxy with 1 to 4 carbon atoms, carbalkoxy with 2 to 5 carbon atoms, unsubstituted sulphamoyl or sulphamoyl which is monosubstituted or disubstituted by alkyl or hydroxyalkyl with 1 to 4 carbon atoms or represents alkylsulphonyl with 1 to 4 carbon atoms.

4,061,861
7-[α-(2,3-DIHYDRO-2-OXO-1H-BENZIMIDAZOL-1-YLCARBONYL-AMINO)ARYLACETAMIDO]CEPHALOSPORINS

William H. W. Lunn, Indianapolis, Ind., assignor to Eli Lilly and Company, Indianapolis, Ind.
Filed June 21, 1976, Ser. No. 698,431
Int. Cl.² C07D *501/34*
U.S. Cl. 544—30 **9 Claims**

1. A compound of the formula

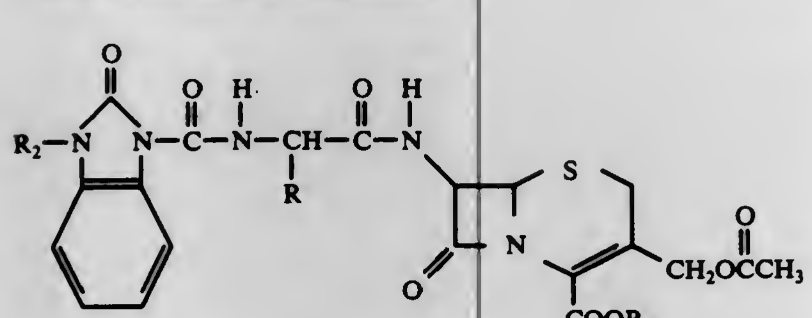

in which R is phenyl, monohydroxyphenyl, dihydroxyphenyl, monohalophenyl, monohydroxy substituted monohalophenyl, thienyl, or furyl;

R_2 is hydrogen or methyl; and R_5 is hydrogen, indanyl, phthalidyl, an acyloxymethyl group of the formula

$$-CH_2-O-\overset{O}{\overset{\|}{C}}-Y$$

in which Y is C_1–C_4 alkyl or phenyl, or, when R_5 is hydrogen, the pharmaceutically acceptable non-toxic salts thereof.

4,061,862
DERIVATIVES OF 7-(CYCLIZED)PHENYLGLYCYL-3-TRIAZOLO-THIO BISMETHYL CEPHALOSPORIN

Murray A. Kaplan, Syracuse; William J. Gottstein, Fayetteville, and Alphonse P. Granatek, Baldwinsville, all of N.Y., assignors to Bristol-Myers Company, New York, N.Y.
Continuation-in-part of Ser. No. 620,005, Oct. 6, 1975, abandoned. This application Feb. 2, 1976, Ser. No. 654,314
Int. Cl.² C07D *501/36*
U.S. Cl. 544—27 **16 Claims**

1. A compound of the formula

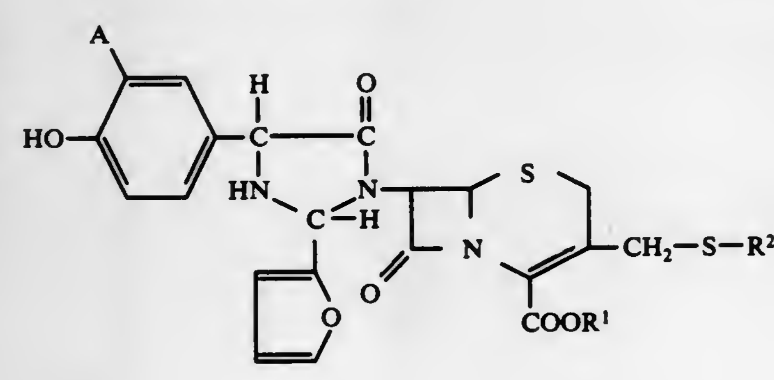

wherein

A is hydrogen, hydroxy, methyl or methoxy,

R¹ is hydrogen, sodium or potassium, and

R² is 1,2,3-triazol-5-yl, such group being unsubstituted or substituted with one or two lower alkyl groups of one to four carbon atoms.

4,061,863
2-CARBALKOXY-2′-CYCLOALKYLAMINOCARBONYL-DIPHENYL SULFIDES

Nariman Bomanshaw Mehta, and Lawrence Edward Brieaddy, both of Raleigh, N.C., assignors to Burroughs Wellcome Co., Research Triangle Park, N.C.
Division of Ser. No. 597,697, July 21, 1975, Pat. No. 3,997,540. This application Sept. 24, 1976, Ser. No. 726,453
Int. Cl.² C07C *149/41*
U.S. Cl. 560—18 **5 Claims**

1. The compound of the formula

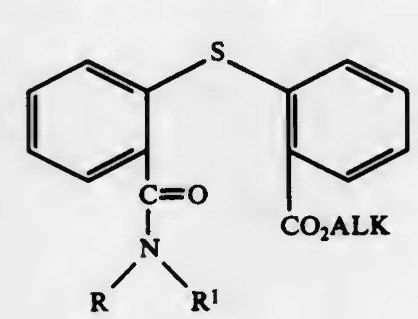

where NRR¹ is

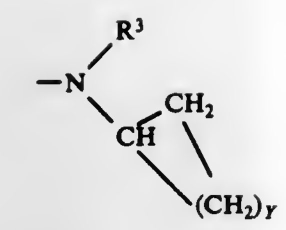

where Y is 3 or 4 and R³ is hydrogen or lower alkyl of 1 to 4 carbon atoms and ALK is alkyl of 1 to 4 carbon atoms.

4,061,864
THIOL CONTAINING COMPOUNDS AND THEIR PREPARATION

James Leverette Guthrie, Ashton, and Shrikant Vishwanath Dighe, Bethesda, both of Md., assignors to W. R. Grace & Co., New York, N.Y.
Continuation-in-part of Ser. No. 408,338, Oct. 23, 1973, abandoned, which is a continuation-in-part of Ser. No. 393,862, Sept. 4, 1973, Pat. No. 3,883,598. This application Jan. 26, 1976, Ser. No. 652,239
Int. Cl.² C07C *101/447*
U.S. Cl. 560—26 **2 Claims**

1. An ether thiol of the formula:

$$R'\left[-NH\overset{O}{\overset{\|}{C}}OR-\left(O\underset{H}{\overset{H}{\underset{|}{\overset{|}{C}}}}CH_2CH_2SH\right)_m\right]_n$$

wherein R′ is the polyvalent organic moiety consisting of the residue of a commercially available polyisocyanate after reaction of the NCO groups, R is the backbone of a saturated aliphatic polyol consisting of atoms of carbon, hydrogen and oxygen and free to reactive functional groups, said polyol containing up to 60 carbon atoms, *m* is an integer of 1 to 7 and *n* is at least 2.

4,061,865
PROSTAGLANDIN ANALOGUES

Masaki Hayashi; Tadao Tanouchi, both of Takatsuki; Hiroyuki Ito, Suita, and Isao Ohyama, Kyoto, all of Japan, assignors to Ono Pharmaceutical Company, Osaka, Japan
Division of Ser. No. 398,714, Sept. 19, 1973, Pat. No. 3,962,312. This application Aug. 11, 1975, Ser. No. 603,475
Claims priority, application Japan, Sept. 21, 1972, 47-94972; Mar. 23, 1973, 48-33234
Int. Cl.² C07C *177/00*
U.S. Cl. 560—121 **8 Claims**

1. 16(R)-Methyl-13,14-dihydro-PGE_2.
5. 16(ε)-Phenyl-ω-trinor-13,14-dihydro-PGE_2.
6. 16(ε)-Cyclohexyl-ω-trinor-13,14-dihydro-PGE_2.
7. 16(ε)-Cyclopentyl-ω-tetranor-13,14-dihydro-PGE_2.
8. 16(ε)-Cyclopentyl-ω-trinor-13,14-dihydro-PGE_2.

4,061,866
2,2-DIFLUORO-13,14-DIHYDRO-PGF₁ ANALOGS

Udo F. Axen, Plainwell, Mich., assignor to The Upjohn Company, Kalamazoo, Mich.
Filed Sept. 17, 1976, Ser. No. 724,157
Int. Cl.² G07C *177/00*
U.S. Cl. 560—121 **18 Claims**

1. A compound of the formula

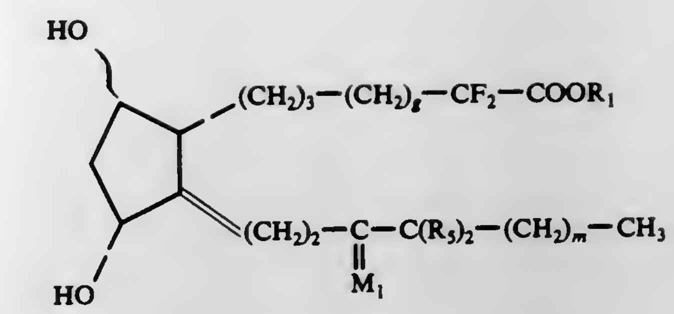

or a mixture comprising that compound and the enantiomer thereof,

wherein *g* is 2 to 4, inclusive;

wherein M_1 is

or

wherein R_7 and R_8 are hydrogen or methyl, with the proviso that one of R_7 or R_8 is methyl only when the other is hydrogen;

wherein *m* is 2 to 4, inclusive;

wherein R_1 is hydrogen, alkyl of one to 12 carbon atoms, inclusive, cycloalkyl of 3 to 10 carbon atoms, inclusive, aralkyl of 7 to 12 carbon atoms, inclusive, phenyl, phenyl substituted with one, 2, or 3 chloro, alkyl of one to 4 carbon atoms, inclusive, or a pharmacologically acceptable cation,

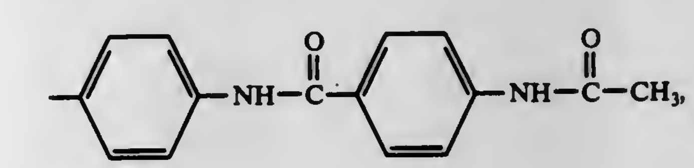

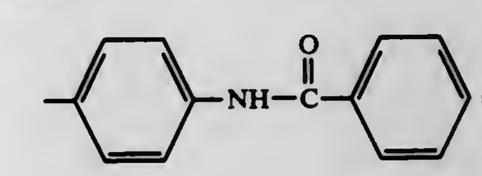

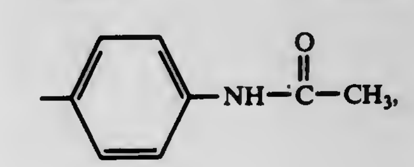

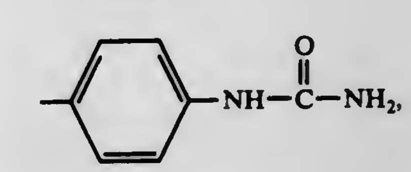

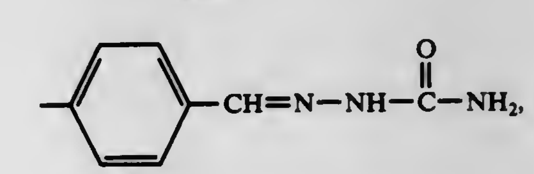

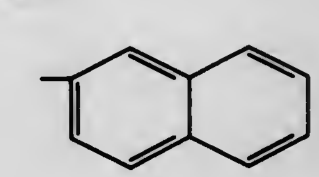

wherein R_5 is hydrogen, methyl, or fluoro with the proviso that R_5 is fluoro only when R_7 and R_8 are both hydrogen, with the proviso that R_5 is methyl only when R_7 and R_8 are both hydrogen, and with the proviso that R_5 is hydrogen only when either one of R_7 and R_8 is methyl.

4,061,867
ACRYLATE ESTER DERIVATIVES
James J. Hamsher, Stonington, Conn., assignor to Pfizer Inc., New York, N.Y.
Division of Ser. No. 312,694, Dec. 6, 1972, Pat. No. 3,925,157, which is a continuation-in-part of Ser. No. 271,159, July 12, 1972, abandoned. This application Aug. 13, 1975, Ser. No. 715,745
Int. Cl.² C07C *9/54*
U.S. Cl. 560—219 **1 Claim**

1. The product produced by contacting a hydroxy-containing vinyl monomer with a cyanogen halide, said monomer having the formula

$$CH_2{=}\underset{\underset{R_1}{|}}{C}{-}\overset{\overset{O}{\|}}{C}{-}X{-}(Y{-}O)_n{-}H$$

wherein
X is —O—;
Y is ethylene or propylene;
n is 1 or 2; and
R_1 is selected from the group consisting of hydrogen, methyl and chloro.

4,061,868
PROCESS FOR THE MANUFACTURE OF GLYCOLS AND GLYCOL NONO-ESTERS
Carlo Fumagalli, Sirone (Como); Giuseppe Caprara, Milan, and Paolo Roffia, Mantova, all of Italy, assignors to Montedison S.p.A., Milan, Italy
Filed Sept. 25, 1975, Ser. No. 616,602
Claims priority, application Italy, Nov. 14, 1974, 29433/74; July 11, 1975, 25335/75
Int. Cl.² C07C *67/05, 29/04*
U.S. Cl. 560—246 **12 Claims**

1. In a process for the manufacture of organic monoesters of vicinal glycols and the corresponding free glycols by reacting an olefin with oxygen, water and a carboxylic acid, in the liquid phase, and at a pH lower than 7, the improvement which comprises contacting the reaction mixture with a catalyst system consisting essentially of (i) iodine or an iodine compound selected from the group consisting essentially of copper iodide, manganese iodide, cerium iodide, an alkali metal iodide, an alkaline earth metal iodide and the iodohydrine of said olefin, (ii) a copper compound selected from the group consisting essentially of copper oxide, copper hydroxide, copper carbonate, copper iodide and a copper salt of said carboxylic acid, and (iii) an activating ion selected from the group consisting of manganese cation, cerium cation, an alkali metal cation, an alkaline earth metal cation, nitric anion, and mixtures of any of the foregoing, wherein the molar ratio of said carboxylic acid to water is lower than 1, the molar ratio of copper to water is equal to or lower than 2 moles of copper per 100 moles of water, and the molar ratio of iodine to copper is lower than 1.

4,061,869
ANTISTATIC AGENT FOR THERMOPLASTIC SYNTHETIC RESIN
Werner Schwarze, Frankfurt; Wolfgang Merk, and Volker Binder, both of Hanau, all of Germany, assignors to Deutsche Gold- und Silber-Scheideanstalt vormals Roessler, Frankfurt and Henkel U. Cie, Dusseldorf-Holthausen, both of, Germany
Filed May 18, 1976, Ser. No. 687,632
Claims priority, application Germany, May 20, 1975, 2522287
Int. Cl.² C08L *23/06, 23/12, 25/06, 27/06*
U.S. Cl. 526—1 **18 Claims**

1. A composition comprising a compound of the formula

$$R{-}\underset{\underset{OR^2}{|}}{CH}{-}\underset{\underset{OR^3}{|}}{CH}{-}R^1$$

where
one of R and R^1 is alkyl and the other R and R^1 is hydrogen or alkyl and the sum of carbon atoms in R and R^1 is 4 to 30,
R^2 is hydrogen or, if R^3 is hydrogen then R^2 is the group

$$(CH_2\ \underset{\underset{R^4}{|}}{CH}O)_nH$$

where n is 1 to 10,
R^3 is hydrogen or, if R^2 is hydrogen than R^3 is the group

$$(CH_2\ \underset{\underset{R^4}{|}}{CH}O)_nH$$

and
R^4 is hydrogen or methyl and a thermoplastic synthetic resin which is a polyolefin, polyvinyl chloride, polystyrene, polyvinyl acetate, polymethyl methacrylate, styrene-acrylonitrile copolymer or ethylene-vinyl acetate copolymer, said compound being present in an amount sufficient to impart antistatic properties to said resin.

ELECTRICAL

4,061,870
TEMPERATURE CONTROL SYSTEM
Youichi Mizushina, Hamura, Japan, assignor to Kokusai Electric Co., Ltd., Tokyo, Japan
Filed July 28, 1975, Ser. No. 599,396
Claims priority, application Japan, July 31, 1974, 49-88212
Int. Cl.² F27B *5/00;* **F27D** *19/00*
U.S. Cl. 13—24 **5 Claims**

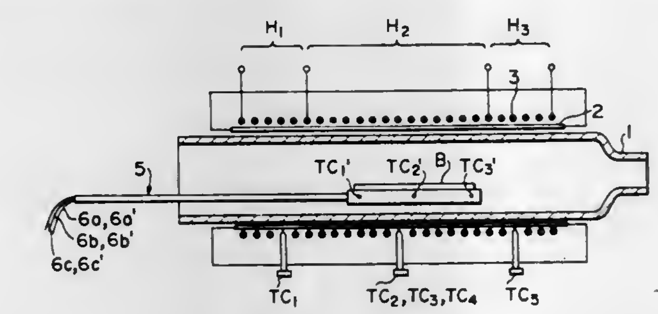

1. A system for establishing a uniform temperature distribution within a reactor tube of a furnace comprising:
a. a furnace having a reactor tube therein,
b. first temperature detection means disposed internally of said reactor tube,
c. heater means disposed externally of said furnace for heating said furnace,
d. first temperature control means responsive to said first temperature detection means for controlling said heater means,
e. second temperature detection means disposed externally of said reactor tube and in the vicinity of said heater for detecting the temperature of said heater, and
f. second temperature control means responsive to said second temperature detection means for controlling said heater means,
whereby said heater is controlled to establish a uniform temperature distribution within said reactor tube.

4,061,871
ELECTRON GUN FOR HEATING, MELTING AND VAPORIZING PURPOSES, WITH DEFLECTION SYSTEMS
Peter Sommerkamp, Hanau am Main, and Walter Heil, Neuberg, both of Germany, assignors to Leybold-Heraeus GmbH & Co. KG, Cologne, Germany
Filed Apr. 29, 1976, Ser. No. 681,634
Claims priority, application Germany, May 2, 1975, 2519537
Int. Cl.² H01J *37/305*
U.S. Cl. 13—31 **8 Claims**

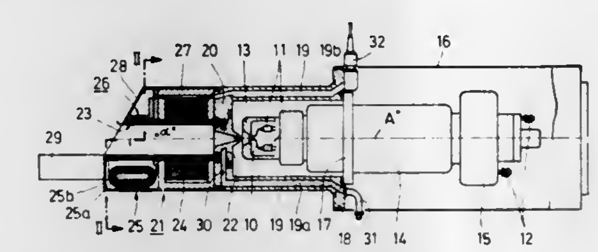

1. In an electron gun for heating, melting and vaporizing purposes having electron-emitting cathode means, at least one beam-forming electrode means associated with the cathode means, accelerating anode means, electromagnetic lens means and beam guiding-tube means extending in the direction of the beam path and surrounded by electromagnetic deflection systems for x-axis deflection and for y-axis deflection, envelope tube means disposed outside of the deflection systems and being joined at its extremity to the end of the beam guiding tube means by end plate means through which pole shoe means of the x-axis deflection system are brought, the improvement which comprises inclining the end plate means towards the cathode means beginning from the pole shoe means of the x-axis deflection system.

4,061,872
CABLE SPLICE KIT
Richard L. DeMonsy, Encino, and Norman K. Hankins, Northridge, both of Calif., assignors to Hexcel Corporation, Dublin, Calif.
Continuation of Ser. No. 412,388, Nov. 2, 1973, abandoned. This application Dec. 29, 1975, Ser. No. 644,407
Int. Cl.² H02G *15/18*
U.S. Cl. 174—138 F **4 Claims**

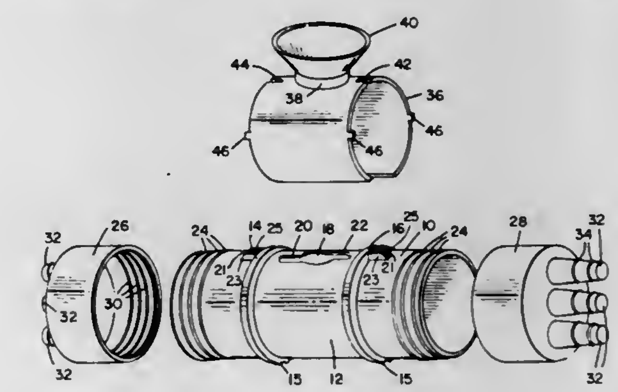

1. An enclosure kit for encapsulating and sealing a splice between two cables comprising:
an enclosed chamber adapted to receive the splice therein, said chamber having a cylindrical center section having an access hole for the pouring of plastic compound into said chamber, said access hole having oppositely directed longitudinal extensions partially axially offset and extending outwardly from a central portion of said access hole, said chamber further having means for providing apertures for passage of cables to the interior of said chamber; and
a sleeve adapted to be placed over the cylindrical section of the chamber and to be rotatable with respect thereto, said sleeve having an aperture corresponding to the central portion of the access hole and the cylindrical section of the chamber and a funnel portion extending outwardly from the aperture, and a pair of slots located on the opposite sides of the aperture with said slots overlapping each said extension when said aperture is aligned with the central portion of the access hole to thereby provide a pair of air escape holes, one or the other of said slots adapted to overlap one or the other of the extensions when said aperture is partially disaligned with the center portion of said access hole to provide a single air escape hole on one or the other side of the aperture to allow complete filling of said chamber with plastic compound.

4,061,873
CORNER INSULATOR FOR ELECTRIC FENCES
Albert T. Berg, Jr., and Howard Langlie, both of Ellendale, Minn. 56026
Filed July 29, 1976, Ser. No. 709,860
Int. Cl.² H01B *17/24;* **A01K** *3/00*
U.S. Cl. 174—208 **6 Claims**

1. A plastic corner post insulator for electric fences comprising a generally U-shaped body which includes first and second rigid legs and a rigid shank connected to one end of each leg and extending therebetween, and a spring arm connected at one end to the other end of said first leg and extending toward and beyond the other or free end of said second leg, said second leg having a transverse groove located on the side thereof remote from said first leg and spaced from said other or free end of said second leg, said spring arm having a hook at its other or free end including a jaw element offset from said spring arm and engageable in said transverse groove to main-

tain said hook in a latched condition, whereby a length of electric fence wire can be retained within the opening formed

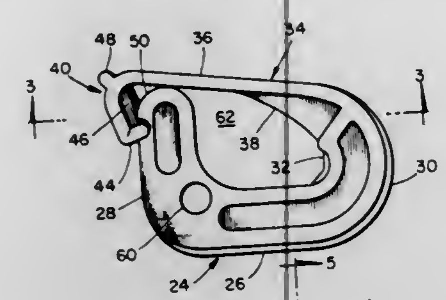

by said U-shaped body and spring arm when said jaw element is engaged in said transverse groove.

4,061,874
SYSTEM FOR REPRODUCING SOUND INFORMATION
J. P. Fricke, Wullnerstrasse 100, Cologne, and Ulrich R. Müller, Siegstrasse 2, Lovenich, both of Germany
Filed June 3, 1976, Ser. No. 692,441
Int. Cl.² H03G *3/20, 9/18*
U.S. Cl. 179—1 P **8 Claims**

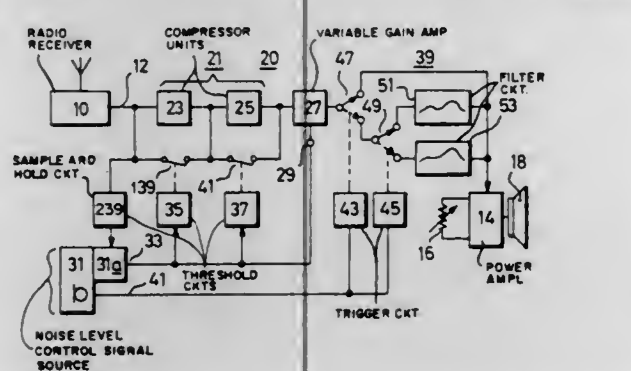

1. A system for reproducing sound information in an environment impaired by noise of varying level, said system comprising:

A signal processing circuit having input means for receiving an input signal conveying audio information, output means for providing an output signal conveying processed audio information, and at least one signal path coupling said input and output means, said audio information occupying a given frequency band and having a given dynamic range; and

a control signal source providing a control signal related to said noise level;

said signal path comprising amplifier means operative in at least a first portion of said frequency band to amplify said input signal,

first means responsive to said control signal to vary the amplification provided by said amplifier means as a first direct function of said noise level,

signal compressor means operative in at least a second portion of said frequency band, and

second means responsive to said control signal to reduce the dynamic range of the signal in said at least second portion as a second direct function of said noise level, to provide an output signal which is boosted and dynamically compressed in at least a portion of said frequency band.

4,061,875
AUDIO PROCESSOR FOR USE IN HIGH NOISE ENVIRONMENTS
Stephen Freifeld, 55 Lancaster Court, New Providence, N.J. 07974, and Paul Yanick, Jr., 673 Wood Ave., Edison, N.J. 08817
Filed Feb. 22, 1977, Ser. No. 770,618
Int. Cl.² H04M *1/19*
U.S. Cl. 179—1 P **21 Claims**

1. Audio processor apparatus for providing protection against high intensity noise levels, while relatively restoring auditory acuity for a user with a normal hearing function in a noisy environment, comprising:

a. Means responsive to a range of audio signals including noise as propagating in an environment, for providing at an output an electrical signal indicative of said range;

b. a A high pass filter responsive to said electrical signal for substantially attenuating a given predetermined lower frequency portion of said range according to the type of noise present in said environment, to provide a limited range signal at an output;

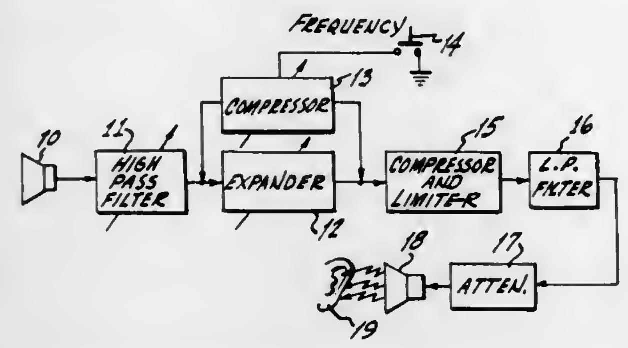

c. Audio processing means including an expander for expanding the range of said limited signal according to the type of noise present, to provide an expanded range signal at an output;

d. Compressor means coupled to said expander and operative to limit the level of said expanded range signal;

e. Means coupled to said compressor means for providing at an output an audible signal manifesting frequency and intensity characteristics sufficient to compensate for said noise of said environment, whereby a user is provided with said audible signal to restore normal acuity.

4,061,876
ELECTRONIC SOUND ENHANCING SYSTEM
J. Christopher Jaffe, Norwalk, Conn., assignor to Jaffe Acoustics, Inc., Norwalk, Conn.
Filed Sept. 26, 1975, Ser. No. 617,215
Int. Cl.² H04R *3/00*
U.S. Cl. 179—1 AT **6 Claims**

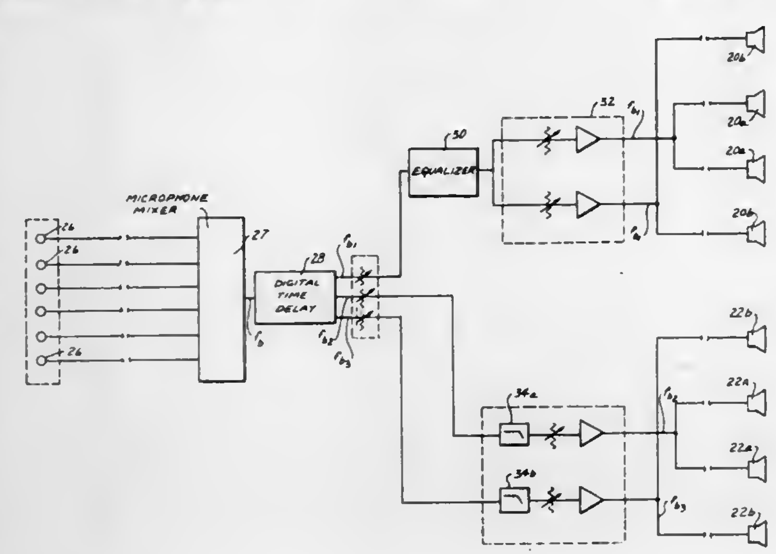

1. An electronic sound enhancing system for use in improving the symphonic criteria of sound emanating from a performing shell comprising in combination microphone means for receiving sound emanating from said performing shell and converting same to an audio signal, time delay means coupled to said microphone means for receiving said audio signal and respectively producing an audio signal delayed by a first time interval and an audio signal delayed by a second time interval, low pass filter means coupled to said time delay means for receiving said audio signal delayed by a first time interval and producing a narrow range audio signal, reverberant field loudspeaker means positioned with respect to said performing shell for receiving said narrow range audio signals delayed by a first time interval to thereby produce narrow range reverberant field sound, and forestage canopy loudspeaker means disposed proximate to said performing shell for simulating a forestage canopy panel by emitting sounds representative of early first reflections of said sound emanating from said performing shell in response to said audio signal delayed by a second time interval being applied thereto.

4,061,877
SPEAKER SYSTEM
William W. Phillips, Rancho Palos Verdes, Calif., assignor to Shaymar, Inc., Beverly Hills, Calif.
Filed Oct. 4, 1976, Ser. No. 728,933
Int. Cl.² H04R *1/32*
U.S. Cl. 179—1 E **10 Claims**

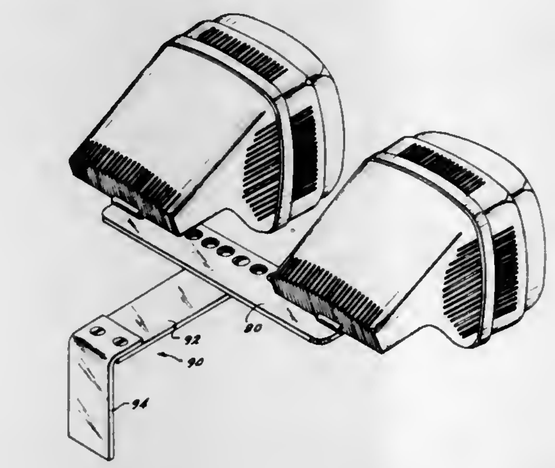

1. A stereo speaker system structure for mounting on the back of a seat which may include a headrest near its top, comprising:

two loud speaker assemblies, each including at least one loud speaker;

an enclosure for each of said loud speaker assemblies, comprising a shell of rigid material substantially surrounding said loud speaker assembly on all sides to form a chamber substantially occupied by said loud speaker assembly and narrowing on one side to form a duct for directing sound produced by said loud speaker assembly;

at least one rigid spacer comprising an elongated member having means for attaching each enclosure to it at a preselected location along its length to form a system structure comprising two of said enclosures held in a spaced-apart relationship by said at least one rigid spacer; and,

means for attaching a strap to the system structure for mounting it on the back of a seat.

4,061,878
METHOD AND APPARATUS FOR SPEECH DETECTION OF PCM MULTIPLEXED VOICE CHANNELS
Jean-Pierre Adoul, Sherbrooke, and Fouad Daaboul, Ottawa, both of Canada, assignors to Universite de Sherbrooke, Canada
Filed May 10, 1976, Ser. No. 684,849
Int. Cl.² G10L *1/04*
U.S. Cl. 179—1 SC **12 Claims**

1. A speech detector for use in a PCM multiplexed voice channel system comprising: means for processing a predetermined batch of consecutive PCM samples; means for sequentially computing a series of parameters during processing of said predetermined batch of consecutive PCM samples, said parameters consisting of a function of the amplitude of the vocal signal, the zero crossing of the voice signal, the zero crossing of the derivative of the vocal signal; and means for determining the status of each channel from information received as a result of the computing of said parameters over said predetermined batch.

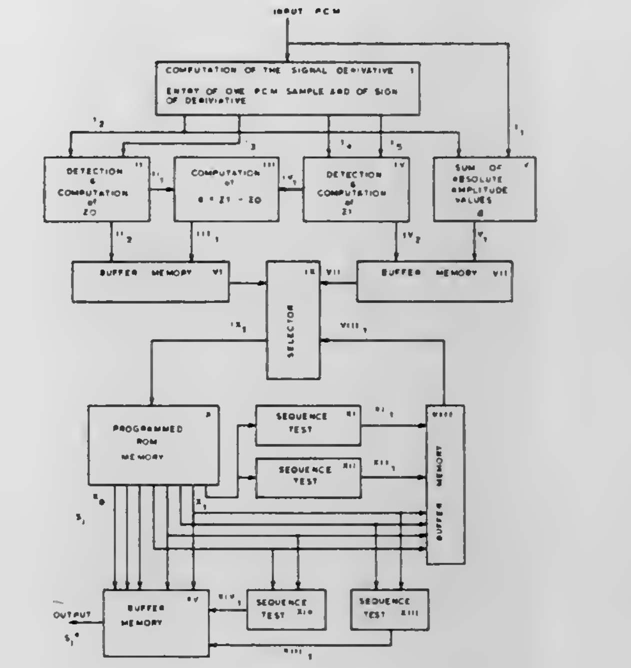

4,061,879
METHOD AND APPARATUS FOR TRANSMITTING DIGITAL INFORMATION SIGNALS FROM SIGNAL TRANSMITTERS TO SIGNAL RECEIVERS OVER SWITCHING APPARATUS
Klaus Wintzer, Munich, Germany, assignor to Siemens Aktiengesellschaft, Munich, Germany
Filed Sept. 29, 1975, Ser. No. 617,526
Claims priority, application Germany, Sept. 30, 1974, 2446696; Apr. 30, 1975, 2519445; May 22, 1975, 2522759
Int. Cl.² H04J *6/00*
U.S. Cl. 179—15 BA **19 Claims**

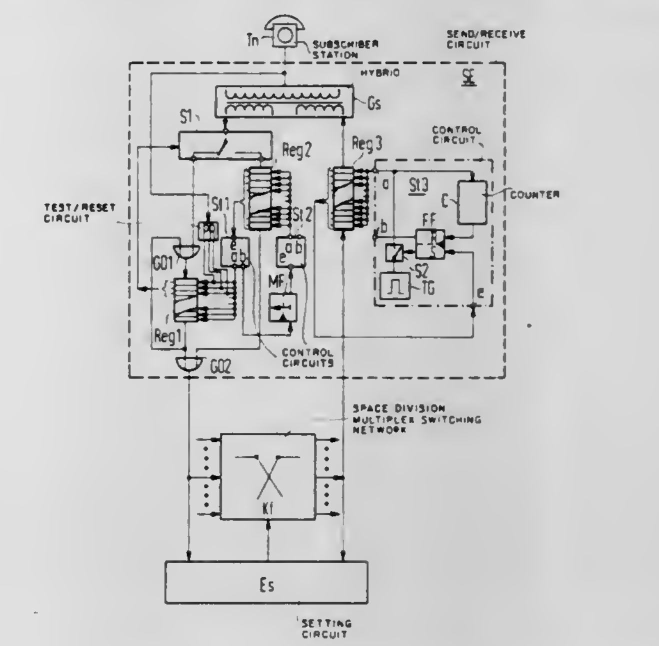

1. A method for serially transmitting digital communication signals from a signal transmitter in one subscriber station to a signal receiver in another subscriber station by means of a space division multiplex switching network, comprising the steps of:

generating in said signal transmitter digital communication signals, each digital communication signal being constituted by an information signal and having an address signal prefixed thereto indicating the specific signal receiver to which the communication signal is to be transmitted,

storing said address signal, prior to transmission, in a first storage means in said signal transmitter,

storing said information signal, prior to transmission, in a second register in said signal receiver,

transmitting said digital communication signal to said space division multiplex switching network when an information signal of a predetermined length has been stored in said second storage means, a plurality of said digital communication signals being transmitted in any time sequence and

establishing a connection through said space division multiplex switching network in accordance with location information contained in said address signal, said connection being established between an input to the switching network receiving the digital communication signal from said signal transmitter and an output of the switching network coupled to said signal receiver in said other subscriber station having an address corresponding to the address signal, said connection being established only for the period of time during which said information signal portion of said digital communication signal is being transmitted.

4,061,880

TIME-MULTIPLEX PROGRAMMABLE SWITCHING APPARATUS

Galen R. Collins, Novato, Calif.; George A. May, Surrey, Canada, and Indra Lee Gendo, Novato, Calif., assignors to Dicom Systems, Ltd., Vancouver, Canada

Filed Mar. 21, 1975, Ser. No. 560,981

Int. Cl.² H04J *6/00*

U.S. Cl. 179—15 BA **16 Claims**

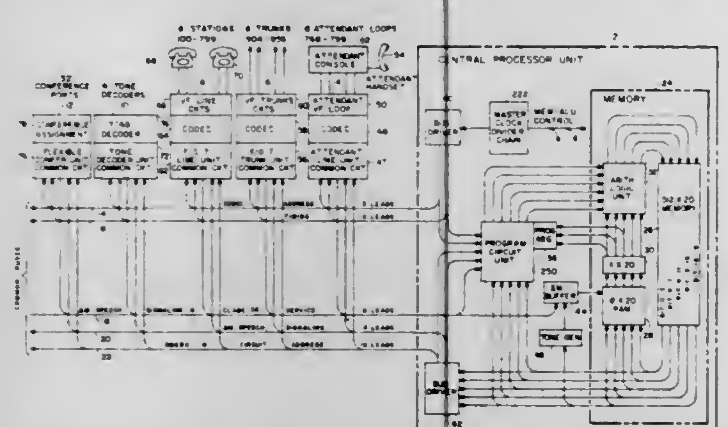

8. In a telephone system, digital time-multiplex programmable switching apparatus for establishing on demand, time shared connections between pairs of ports comprising

a plurality of port means, each of said port means comprising one or more port circuit means having a common buffer memory means, each of said port circuit means having a unique address, said port circuit means including means for generating predetermined digital signaling signals in response to particular condition at said port circuit means and said port circuit means further including means for generating digital information signals when an information input signal is applied,

central processor unit means including memory means having a plurality of recirculating slots and means for inserting in said memory means slots pairs of port circuit means addresses and information signals directed to said addresses in response to said signaling signals from said port circuit means to establish time-multiplex information exchanging connections between said pairs of port circuit means, and

common bus means interconnecting all of said plurality of port means and said central processor means.

4,061,881

METHOD AND APPARATUS FOR GENERATING A NUMBER OF WEAKLY CORRELATED PSEUDORANDOM PULSE TRAINS

Walter Herbert Erwin Widl, Bandhagen, Sweden, assignor to Telefonaktiebolaget L M Ericsson, Stockholm, Sweden

Filed July 19, 1976, Ser. No. 706,928

Claims priority, application Sweden, Aug. 15, 1975, 7509183

Int. Cl.² H04J *3/00*

U.S. Cl. 179—15 BF **8 Claims**

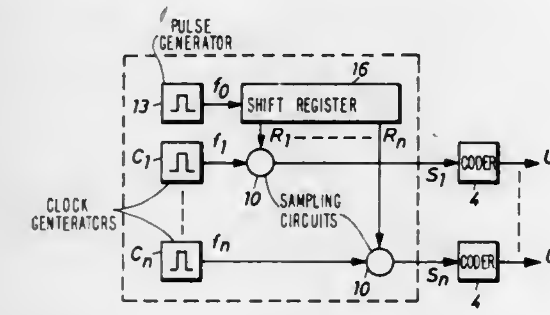

2. Apparatus for simultaneously generating a plurality of parallel trains of variable-width output pulses comprising parallel pulse train generating means for generating N trains of binary pulses, where N is an integer, each of said trains having the same given pulse repetition rate and same sequential pulse patterns but time-phase displaced from each other by at least one pulse time, sampling pulse generating means for generating N sets of sampling pulses, the pulse repetition rates of each of said sets being within a range encompassing said given pulse repetition rate with some of said rates being different from each other, and N output pulse generating means for generating output pulses, each of said output pulse generating means having input means for receiving one of said sets of sampling pulses and one of said trains of binary pulses and including means for initiating an output pulse when there is a coincidence of a sampling pulse and a binary pulse and for terminating the output pulse when a binary pulse is not present during the occurrence of a sampling pulse.

4,061,882

QUADRATURE MULTIPLYING FOUR-CHANNEL DEMODULATOR

Louis Dorren, San Mateo, Calif., assignor to Quadracast Systems, Inc., San Mateo, Calif.

Filed Aug. 13, 1976, Ser. No. 714,034

Int. Cl.² H04H *5/00*

U.S. Cl. 179—15 BT **5 Claims**

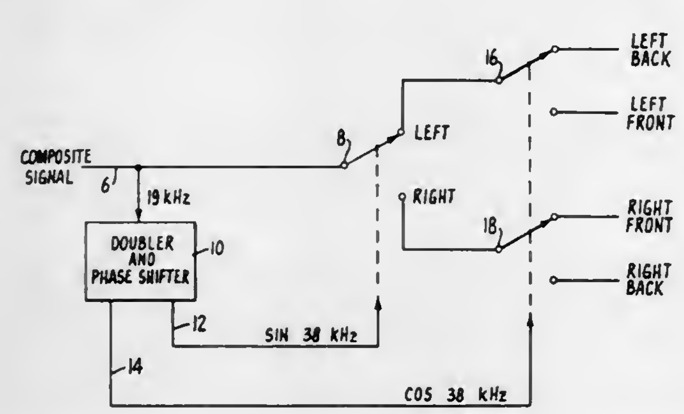

1. A decoder for composite FM signal wherein the composite signal has a main channel having first, second, third and fourth bits of information thereon, a pilot signal removed from said main channel, a first subchannel having a frequency twice that of said pilot signal having two carriers in quadrature thereon, namely, a sine carrier containing plus first plus second minus third minus fourth information and a cosine carrier containing plus first minus second minus third plus fourth information thereon and a second subchannel at a frequency twice that of said first subchannel containing plus first minus

second plus third minus fourth information thereon, wherein the improvement consists of a means of demodulating the above-described four channel composite signal, such means comprising in combination:

a. means for extracting said pilot signal;

b. means for doubling said pilot signal to yield a first switching signal representing the sine carrier of the first subchannel;

c. means for inverting said first signal to provide a second switching signal 180° out of phase with said first switching signal;

d. means for doubling and shifting the phase of said pilot signal to provide a third switching signal 90° out of phase with said first switching signal representing the cosine carrier of said first subchannel;

e. means for inverting said third signal to provide a fourth switching signal 180° out of phase with said third switching signal;

f. first, second, third and fourth AND gates,

g. four switches, each switch being actuated by one of said AND gates, said switches being connected to switch said composite signal to four outputs;

h. means for feeding the first and fourth switching signals to the first AND gate;

i. means for feeding the first and third switching signals to the second AND gate;

j. means for feeding the second and third switching signals to the third AND gate;

k. means for feeding the second and fourth switching signals to the fourth AND gate whereby,

l. the output of each of said switches represents one of said bits of information.

4,061,883

REPEATER FOR TRANSMISSION LINES OF DIFFERING LENGTHS

Charles W. Chambers, Jr., Amherst, Ohio, assignor to Lorain Products Corporation, Lorain, Ohio

Division of Ser. No. 560,257, March 20, 1975, Pat. No. 3,989,907. This application July 12, 1976, Ser. No. 704,446

Int. Cl.² H04M *3/46*

U.S. Cl. 179—16 F **3 Claims**

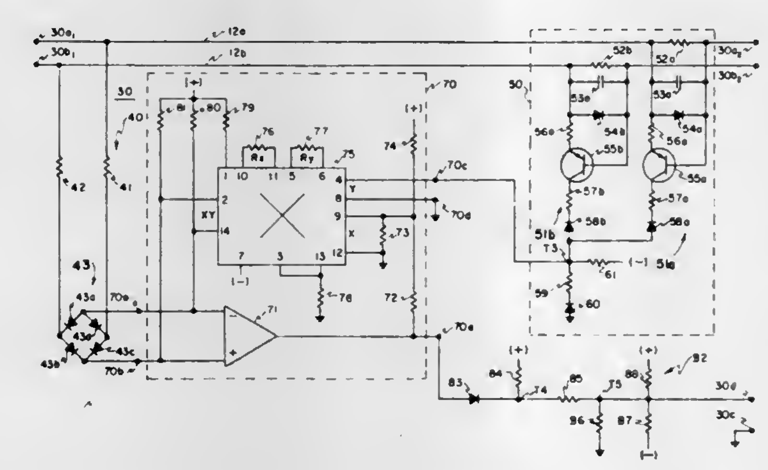

1. In a circuit for establishing a control signal which is indicative of the a-c losses of a telephone transmission line, the combination of:

voltage sensing means for sensing the voltage across the transmission line and for establishing a line voltage signal which varies in accordance therewith;

current sensing means for sensing the current in the transmission line and for establishing a line current signal which varies in accordance therewith; and

analog dividing means for generating a control signal which is proportional to the a-c losses of the transmission line by dividing the line voltage signal by the line current signal.

4,061,884

ARRANGEMENT FOR CONTROLLING THYRISTOR NETWORKS

James Mark Adrian, Naperville, Ill., assignor to Bell Telephone Laboratories, Incorporated, Murray Hill, N.J.

Filed Aug. 5, 1976, Ser. No. 712,012

Int. Cl.² H04Q *3/50*

U.S. Cl. 179—18 GF **15 Claims**

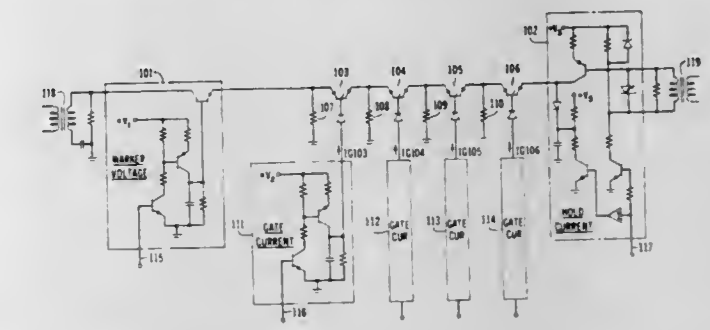

1. In combination:

a plurality of thyristors comprising a first and a last thyristor wherein each of said thyristors comprise a main conduction path between a first and a second electrode and a control path between said first electrode and a gate electrode;

connecting means for serially connecting the main conduction paths of said thyristors by connecting the second electrode of each thyristor, except the last thyristor, to the first electrode of a subsequent thyristor;

marking means for applying a marking potential to the first electrode of said first thyristor;

control current generator means connected to said gate electrodes for producing control currents, equal to or greater than the holding current of said thyristors, in the control paths of each of said thryistors in sequence and overlapped in time, from said first to said last thyristor; and

holding means connected to said last thyristor for producing a current, equal to or greater than the holding current of said thyristors, in the main conduction paths of said thyristors.

4,061,885

DIGITAL TONE DECODER

Harold Garth Nash, Tempe, and Jack Whitmore, Phoenix, both of Ariz., assignors to Motorola, Inc., Chicago, Ill.

Filed Dec. 17, 1975, Ser. No. 641,453

Int. Cl.² H04M *1/50*

U.S. Cl. 179—84 VF **10 Claims**

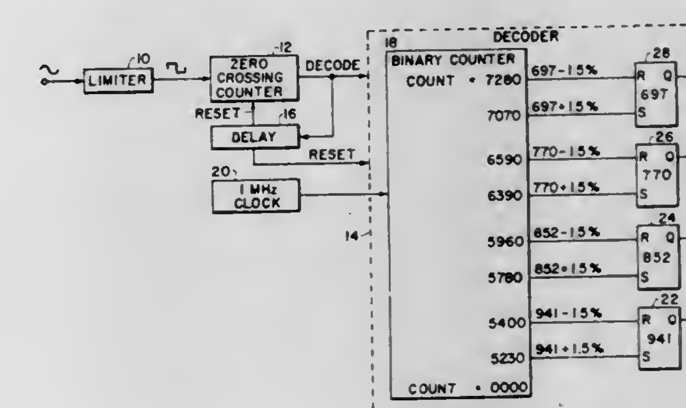

1. A digital tone decoder comprising:

a. means for generating a timing signal;

b. zero crossing counter means for generating a decode signal after a predetermined number of zero crossings in response to an incoming time domain signal and for generating a reset signal at a predetermined time after the de-

code signal is sent to reset said zero crossing counter means to zero;

c. decoder means coupled to said zero crossing counter and to said timing means for generating an output signal at one of a plurality of output terminals corresponding to the frequency of the incoming signal upon receipt of the decode signal from said zero crossing counter means, said decoder means being reset to an initial state upon receipt of the reset signal; and

d. means for selectively modifying the number of zero crossings of said time domain signal appearing at the input to said zero crossing counter

4,061,886
DUAL TONE MULTIPLE FREQUENCY GENERATOR
Michael James Callahan, Jr., Garland, and Gordon Bates Hoffman, Dallas, both of Tex., assignors to Mostek Corporation, Carrollton, Tex.
Filed Sept. 29, 1975, Ser. No. 617,955
Int. Cl.² H04M *1/26*
U.S. Cl. 179—84 VF 25 Claims

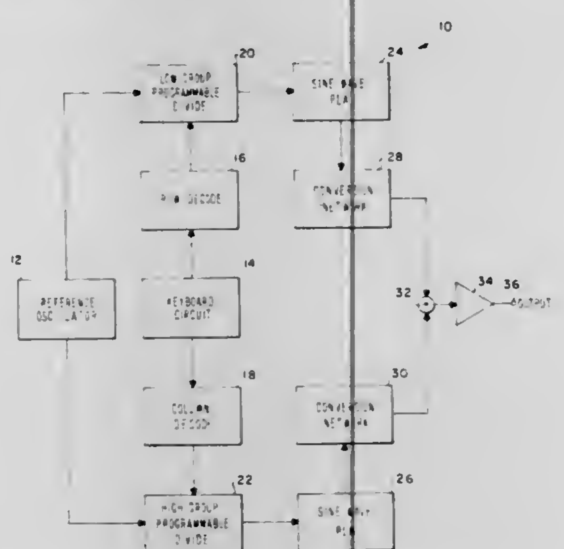

1. A multiple frequency signal generator on an MOS integrated circuitry chip for providing a dual-tone output signal representative of a selected key on a keyboard connected to said chip, comprising:

keyboard decode means for generating pulse signals representative of said selected key, including means for directing first synchronized pulses to said keyboard, means for receiving second synchronized pulses from said keyboard and means for decoding said first and second synchronized pulses to generate said pulse signals;

means for generating a fixed frequency;

means for dividing said fixed frequency in response to said pulse signals to generate digital signals having frequencies representative of said selected key;

programmed logic array means having an MOS read-only memory matrix for translating said digital signals to digitally coded signals having code values representative of sinusoidal waveforms; and

conversion means for converting said digitally coded signals to analog sine wave signals having frequencies representative of said selected key; and

output means for combining said sine wave signals to generate said dual-tone signal on the output of said chip.

4,061,887
KEY TELEPHONE ADAPTER FOR ELECTRONIC TELEPHONE SWITCHING SYSTEM
James M. Kasson, San Mateo, and Samuel F. Wood, Los Altos Hills, both of Calif., assignors to Rolm Corporation, Cupertino, Calif.
Filed Apr. 23, 1976, Ser. No. 679,632
Int. Cl.² H04M *1/00*
U.S. Cl. 179—99 2 Claims

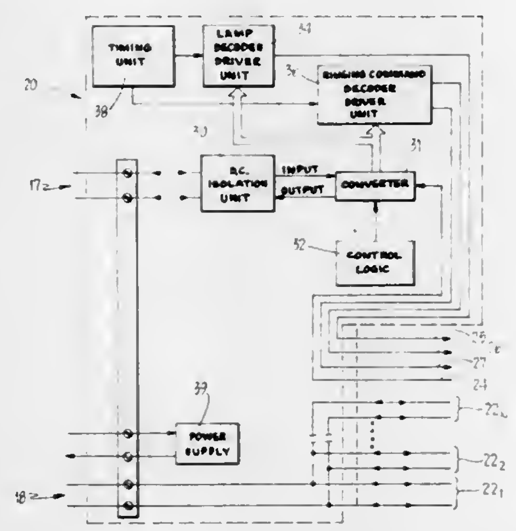

1. An apparatus responsive to a predetermined polling command from an electronic branch exchange for converting signals representative of the status of each line of a line selector unit of a standard multi-line key telephone instrument to serial data signals for transfer to said electronic branch exchange via a pair of data signal conductors and for converting serial data command signals received from said branch exchange via said pair of data signal conductors to command signals specifying operation of a plurality of line status indicators in said key telephone instrument, said apparatus comprising:

input/output port means adapted to be coupled to said pair of data signal conductors and including D.C. isolation means;

input terminal means adapted to be coupled to said line selector unit;

output terminal means adapted to be coupled to said line status indicators;

converting means having a serial data port coupled to said input/output port means, a parallel data input terminal means, and a parallel data output terminal means, said converting means including universal asynchronous receiver/transmitter means for converting serial data signals input thereto to parallel data signals appearing on said parallel data terminal means and means for converting parallel data signals input thereto to serial data signals appearing on said serial data port;

encoder means coupled to said input terminal means and said converting means for furnishing said line selector unit signals to said parallel data input terminal;

decoder means coupled to said output terminal means and said parallel data output terminal means of said converting means for furnishing said line status indicator command signals to said output terminal means;

control means responsive to receipt of said predetermined polling command by said converting means for enabling said converting means to generate said serial data signals from said line selector unit signals and for enabling said serial data signals to be coupled to said input/output port means, and responsive to receipt of said data command signals for enabling said converting means to generate said parallel data signals from said incoming serial data signals appearing at said input/output port means and for enabling said decoding means to couple said command signals to said output terminal means,

said encoder means including status change detector means for generating a control signal for conditioning said control means whenever said line selector unit signals are altered,

said decoder means including a ringing command decoder/-driver unit selectively responsive to a first group of said data command signals for generating a first group of said line status indicator command signals, and a lamp command decoder/driver unit selectively responsive to a second group of said data command signals for generating a second group of said line status indicator command signals,

said ringing command decoder/driver unit comprising a ringing command decoder, a ringing logic circuit coupled to said ringing command decoder, and a ringing circuit coupled to said ringing logic circuit;

first timing means for generating a first periodic waveform of a first frequency on a first terminal, said first terminal being coupled to said ringing logic circuit;

said lamp command decoder/driver unit including a plurality of lamp driver circuits, means for storing said command signals from said second group in an ordered sequence with each said stored command signal being associated with a different one of said driver circuits, and means for sequentially enabling said plurality of lamp driver circuits in accordance with the corresponding stored command signal; and

second timing means for generating a pair of periodic signals of different frequencies,

said lamp command decoder/driver unit further including means for selectively applying said periodic signals to said sequential enabling means in order to modulate the actuation of individual ones of said plurality of lamp driver circuits.

4,061,888
CONTROL UNIT MOUNTING AND INTERCONNECTING APPARATUS FOR TELEPHONE SETS
Harry R. Rasmussen, Tacoma, Wash., assignor to Crest Industries, Inc., Puyallup, Wash.
Filed Aug. 12, 1976, Ser. No. 713,870
Int. Cl.² H04M *1/02*
U.S. Cl. 179—100 D 10 Claims

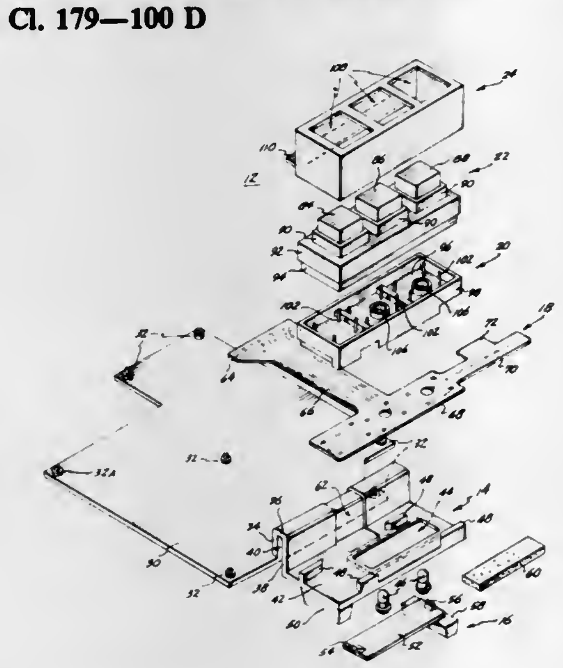

1. An apparatus for mounting a control unit, the control unit comprising manually-operable switch means having a base portion on which are arranged, in spaced-apart relation, a plurality of electrical switch terminals, on a telephone desk set which includes a substantially planar base having an upstanding peripheral flange and a removable cover having a downstanding peripheral wall extending over the flange in assembly, and for electrically interconnecting the electrical switch terminals of the control unit with a plurality of electrical terminals located on a printed circuit board to be installed within the telephone desk set, said apparatus comprising:

a. a base member including a first plate portion for supporting the printed circuit board within the telephone desk set, said first plate portion having an upper surface and a substantially planar lower surface formed to lie on the substantially planar base totally within the flange thereof, a second plate portion which is to be located external to the telephone desk set in assembly, said second plate portion having an upper surface formed to receive the base portion of the control unit, and a lower surface and wall means joining said first and second plate portions, said wall means having an upper surface defining a recess for receiving a printed circuit interconnecting element and a lower surface defining a recess for receiving a portion of the flange of the substantially planar base; and,

b. a printed circuit interconnecting element including a flexible insulating member formed into a first portion for overlying said first plate portion, a second portion for overlying said second plate portion, and a strip joining said first and said second portions for overlying said wall means and further including a plurality of conductors located on said flexible insulating member and having respective terminals in said first and said second portions adapted to be electrically connected to the plurality of electrical terminals located on the printed circuit board within the telephone desk set and to the plurality of electrical switch terminals of the control unit, respectively.

4,061,889
FILM WITH LIGHT SOUND TRACK CARRYING THE STEREOPHONIC SOUND INFORMATION; RIBBON LIGHT VALVE FOR PROVIDING THE LIGHT SOUND TRACK AS WELL AS LIGHT SOUND ADAPTER FOR REPRODUCING THE INFORMATION RECORDED ON LIGHT SOUND TRACK
Gabor Erdelyi, Lumumba Street 174, Budapest XIV, Hungary
Continuation of Ser. No. 404,713, Oct. 9, 1973, abandoned. This application Oct. 20, 1975, Ser. No. 624,165
Int. Cl.² G11B *7/20*
U.S. Cl. 179—100.3 T 3 Claims

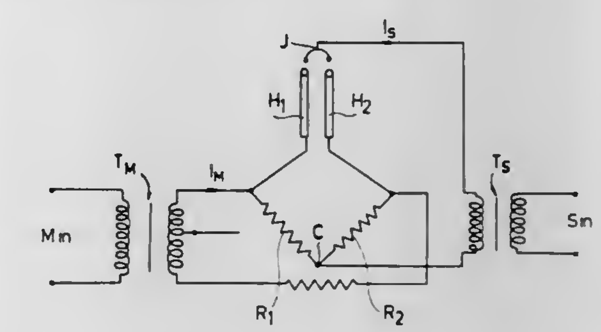

1. A film having a light-sound track carrying first and second stereophonic sound information and comprising a film body and along said film body a light sound track carrying stereophonic sound information in a curve with varied width, said curve having two boundries and a center line the width of the curve modulated transversely by said first stereophonic sound information and the center line of the curve being modulated by said second stereophonic sound information, said boundries varying independently of one another to provide said varied width.

4,061,890
LOUDSPEAKER WITH SINGLE LAYER RECTANGULAR WIRE VOICE COIL WOUND ON SLIT METAL BOBBIN WITH A NOTCH IN THE ADJACENT POLE PLATE
Thomas A. Froeschle, Framingham, Mass., assignor to Bose Corporation, Framingham, Mass.
Filed Aug. 27, 1976, Ser. No. 718,112
Int. Cl.² H04R *9/04*
U.S. Cl. 179—115.5 VC 4 Claims

1. In a loudspeaker assembly including a basket, diaphragm and means defining an air gap having a magnetic field therein, the improvement comprising,

a single-layer voice coil formed by conducting wire of rectangular cross section wound upon a sheet metal bobbin having a longitudinal slit and an end portion of the conductor comprising the coil folded over from one end of the single layer to the other end,

the means defining an air gap including a front pole plate formed with a central opening that comprises means for defining the air gap and a notch extending radially outward from the central opening of area slightly greater than the cross sectional area of the folded-over end portion with the folded-over end portion passing through said notch in noncontacting relationship with said front pole plate,

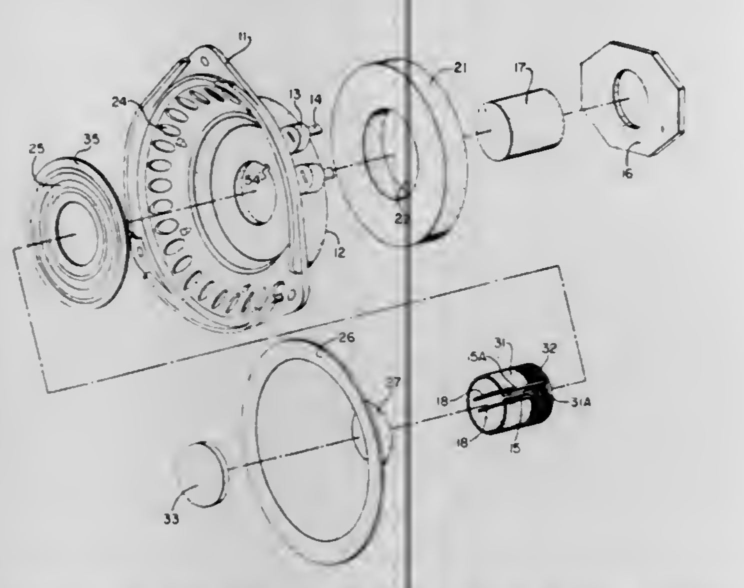

and means for supporting said voice coil and bobbin in said air gap to substantially fill said air gap while being in noncontacting relationship with said means defining an air gap.

4,061,891

TEST INSTRUMENT FOR DETERMINING APPARENT POWER CONSUMPTION AND GROUND FAULTS IN VARIOUS PORTIONS OF A DISTRIBUTED-LOAD, CONSTANT VOLTAGE AUDIO DISTRIBUTION SYSTEM

Wayne A. Pommer, 475 Mount Hood Drive SW., Issaquah, Wash. 98027

Filed Feb. 16, 1977, Ser. No. 769,387

Int. Cl.[2] H04R *29/00*

U.S. Cl. 179—175.1 A **18 Claims**

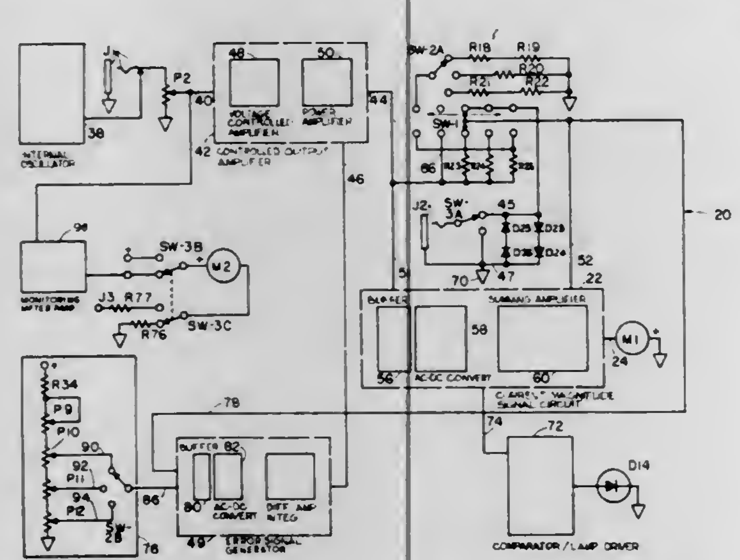

1. A test instrument for determining apparent power consumption in various portions of a distributed-load, constant-voltage audio distribution system, comprising:

a. a controlled output amplifier having an input for receiving an audio input signal of a frequency at which the apparent power consumption is to be tested, a control signal, input, and an output which controlled amplifier produces an output signal at the test frequency of a voltage dependent on the magnitude of the signal received at the control signal input;

b. a resistance;

c. means for connecting the resistance to the output of the controlled amplifier;

d. means for connecting the resistance to that portion of the distributed-load, constant-voltage audio distribution system to be tested so that a test signal is applied to the portion of the system to be tested and the current that passes through the resistance is substantially equivalent to that which passes through that portion of the system to be tested;

e. means for supplying a reference voltage signal having a magnitude corresponding to the voltage at which the apparent power consumption is to be determined;

f. means, having inputs connected to the reference voltage supply means and the audio distribution system connection means and an output which is connected to the control signal input of the controlled amplifier, for producing an error signal at the output so that a test signal of a voltage corresponding to the voltage at which the apparent power consumption is to be determined is applied to the circuit under test at the audio distribution system connection means;

g. means connectable across the resistance for producing a signal having a magnitude indicative of the amount of current passing through the resistance; and

h. means connected to the current magnitude signal means for indicating the magnitude of the current passing through the resistance which indication is indicative of the apparent power consumed by the tested system.

4,061,892

INSTRUMENTS AND METHODS FOR MEASURING CHARACTERISTICS OF ONLY A SELECTED PORTION OF A TRANSMISSION CHANNEL

Frank R. Bradley, Bronx, N.Y., assignor to Bradley Telcom Corp., Leonia, N.J.

Filed Dec. 15, 1976, Ser. No. 750,614

Int. Cl.[2] H04B *3/46*

U.S. Cl. 179—175.3 R **20 Claims**

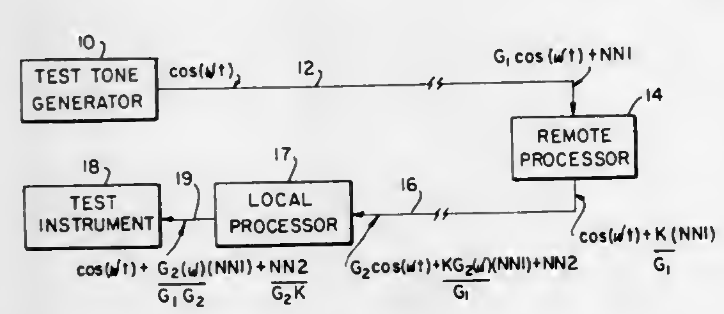

18. A method for processing a received signal consisting of test tone and disturbance components and applying the processed signal to a test instrument comprising the steps of operating on the received signal to derive a signal proportional thereto but with the tone component level increased relative to the disturbance component level by a predetermined factor, and applying the derived signal to said test instrument.

4,061,893

SPRINKLER FLOW CONTROL SYSTEMS HAVING CONTINUOUS CYCLE TIMER AND ASSOCIATED APPARATUS DISPOSED IN A HERMETICALLY SEALED HOUSING

George E. Sanner, P.O. Box 10707, Towson, Md. 21204

Division of Ser. No. 625,350, Oct. 25, 1975, Pat. No. 4,014,359, which is a continuation-in-part of Ser. No. 466,693, May 3, 1974, Pat. No. 3,915,185, which is a continuation-in-part of Ser. No. 272,793, June 18, 1972, Pat. No. 3,848,616, which is a continuation-in-part of Ser. No. 18,829, Feb. 12, 1970, abandoned, which is a division of Ser. No. 456,787, May 18, 1965, Pat. No. 3,500,844. This application Apr. 14, 1976, Ser. No. 676,877

Int. Cl.[2] H01H *7/00, 43/00*

U.S. Cl. 200—38 D **63 Claims**

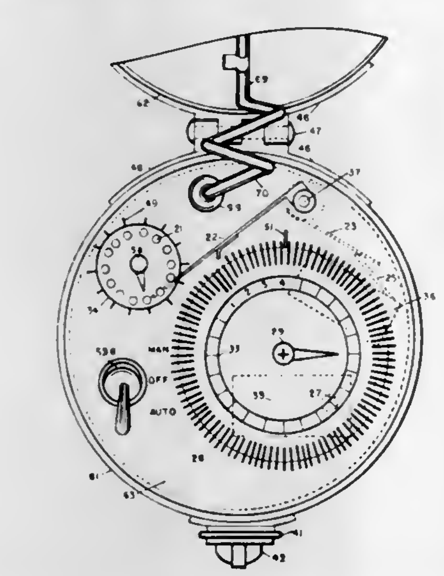

1. An electrical timer switch control means comprising: timer means, a time switch, timer operating means, timer switch operating means, and time switch circuit means; an electrical load in a casing; said casing having a main quadric or frustoconical member the tapered peripheral extremity of which circumferentially abuts the peripheral extremity of a flat bottom cover thereby enclosing the bottom of said main frustoconical member, and the opposite peripheral extremity of said quadric or frustoconical member circumferentially abuts one peripheral extremity of a section of right circular cylinder and is contiguously attached thereto, a panel affixed to and closing said right circular cylindrical section at the opposite end thereof, said panel having a flat portion spanning said cylindrical member with a flange around the periphery of said panel flat portion, peripheral extremity of said panel flange in contiguous circumferential abutment with the peripheral extremity of said right circular cylinder; a continuous annular gasket inserted contiguously between said panel flange peripheral extremity and said main casing member peripheral extremity, said panel flange peripheral extremity is sandwiched circumferentially into the upper annular face of said gasket, and the opposite annular face of said gasket is telescoped over said main casing member peripheral extremity thereby providing a hermetical seal between the exterior surface of said panel and the interior of said main quadric casing member; a top cover comprising a quadric or frustroconical portion and a cylindrical portion the peripheral extremity of which is telescoped over the exterior surface of said panel peripheral flange and abuts circumferentially said upper annular face of said annular gasket thereby providing a hermetical seal between the exterior surface of said top cover and the exterior surface of said panel; said timer means and said timer operating means disposed on the exterior surface of said panel, being non-electrical; said timer means, said time switch, and said timer operating means disposed on the interior surface of said panel, being electrical; said timer operating means disposed on the interior surface of said panel motivating said timer means disposed on the exterior surface of said panel, by means of a single rotating drive shaft that protrudes through a hermetically sealed bushing extending from said panel interior surface to said panel exterior surface; said timer switch operating means disposed on said panel exterior surface actuating said timer switch operating means and said time switch, disposed on said panel interior surface by means of a single angularly oscillating drive shaft means protruding through a hermetically sealed bushing extending from said panel interior surface to said panel exterior surface; means accessible from the exterior of said casing for connecting an external power source to said timer operating means and for connecting said external power source in series with said electrical load and said time switch; and said timer operating means motivating said timer switch operating means causing said time switch to open and close in an automatically repetative cycle thereby energizing and de-energizing said load by means of said timer means.

4,061,894

VACUUM-TYPE CIRCUIT INTERRUPTER WITH IMPROVED PROTECTION FOR BELLOWS

Donald Wayne Crouch, Newtown Square, Pa., assignor to General Electric Company, Philadelphia, Pa.

Filed Apr. 28, 1976, Ser. No. 681,008

Int. Cl.[2] H01L *33/66*

U.S. Cl. 200—144 B **6 Claims**

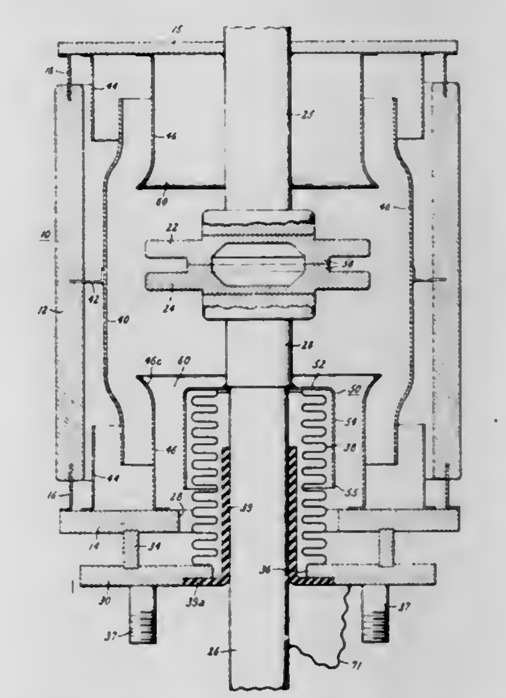

1. A vacuum-type circuit interrupter comprising:

a. a highly-evacuated envelope comprising a tubular casing of insulating material and a metal end cap that contains an aperture and is joined in sealed relationship to said casing at one end of said casing,

b. separable contacts primarily of beryllium located within said envelope,

c. a movable conductive contact rod extending freely through said aperture in said end cap and carrying one of said contacts at one end thereof,

d. a plate located at the outer side of said end cap and joined to said end cap in sealed relationship thereto, said plate being spaced from said end cap and containing an opening through which said movable contact rod freely extends,

e. a flexible metal bellows of generally tubular form surrounding said contact rod and having its axially-inner end joined to said contact rod and its axially-outer end joined to said plate, said bellows extending freely through said aperture in said end cap,

f. a cup-shaped metal shield for said bellows comprising:

f_1. an end wall joined to said contact rod near said inner end of the bellows, and

f_2. a tubular body portion projecting from said end wall and surrounding said bellows along a portion of the bellows length, the free-end region of said tubular body portion being located substantially within said aperture during at least the final portion of an opening stroke of

the movable contact rod, with only a small clearance between said aperture and said free-end region,

g. a metal main shield within said casing, surrounding said contacts, and normally electrically isolated from said contacts for condensing beryllium vapors generated by arcing between said contacts, said main shield having an end portion surrounding said cup-shaped bellows shield,

h. a metal end shield mounted on said end cap and electrically connected thereto, said end shield having a tubular portion surrounding the tubular portion of said cup-shaped shield and disposed between said tubular portion of the cup-shaped shield and the end portion of said main shield in radially-spaced relation to said end portion, the region between the tubular portions of said cup-shaped shield and said end shield being a region of very low electric stress.

4,061,895

HIGHER RATED DOUBLE-POLE TRIGGER SWITCH

Harold W. Hults, New Berlin, Wis., assignor to Cutler-Hammer, Inc., Milwaukee, Wis.

Filed Jan. 21, 1976, Ser. No. 651,171

Int. Cl.² H01H *9/06, 13/08*

U.S. Cl. 200—157 **23 Claims**

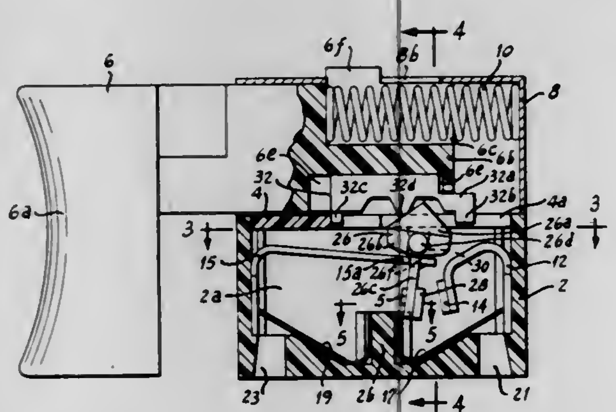

1. A double-pole tool handle switch comprising:
an electrically insulating housing;
a pair of stationary contacts mounted in said housing;
a pair of identical adjacent contactors each having: (1) a middle portion mounting the same to said housing for pivotal and vertical movement therein; (2) a lower portion carrying a movable contact for engaging the respective stationary contact in one direction of pivoting of said contactor and for disengaging said respective stationary contact in another direction of pivoting of said contactor; and (3) an upper portion having a pair of oppositely inclined camming surfaces forming an apex at their junction;
limiting means in said housing limiting the pivoting of each contactor in said other direction;
a pair of resilient cantilever terminals in electrical engagement with respective contactors, each terminal having one end mounted to said housing and the other end biasing the respective contactor upwardly;
an operator slidably mounted to said housing;
cam means slidably mounted to said operator for limited motion therealong between first and second limited positions relative thereto and arranged to engage said camming surfaces of said contactors; and
stop means in said housing for limiting the movement of said cam means relative thereto between forward and rearward positions such that said cam means is continuously in engagement with camming surfaces of said contactors to stop the upward movement thereof thereby effecting a torque on said contactors about said middle portions;
such that during operation of said operator said cam means slides along said operator to said first limited position, after which said cam means is carried by said operator and slides across one of said inclined surfaces of each contactor causing downward movement of said contactors until said cam crosses said apex of each contactor, after which a reverse torque pivots the contactors to close said contacts and the contactors move upwardly as said cam means slides across the other of said inclined surfaces of each contactor to provide contact wiping, said cam means simultaneously sliding along said operator to said rearward position relative to said housing, and such that during return operation of said operator said cam means slides along said operator to said second limited position, after which said cam means is carried by said operator and slides across said other of said inclined surfaces of each contactor causing downward movement of said contactors to shear any welds formed between said contacts until said cam means crosses said apex of each contactor, after which said contactors pivot to open said contacts and move upwardly as said cam means slides across said one of said inclined surfaces of each contactor, said cam means simultaneously sliding along said operator to said forward position relative to said housing.

4,061,896

MODULAR VAULT-TYPE LOAD BREAK SWITCH

John F. Clancy, 440 Arizona Ave., Glenwood, Ill. 60425, and Clarence L. Welter, 131 Philip Lane, Valparaiso, Ind. 46383

Filed May 24, 1974, Ser. No. 472,969

Int. Cl.² H01H *9/20*

U.S. Cl. 200—323 **10 Claims**

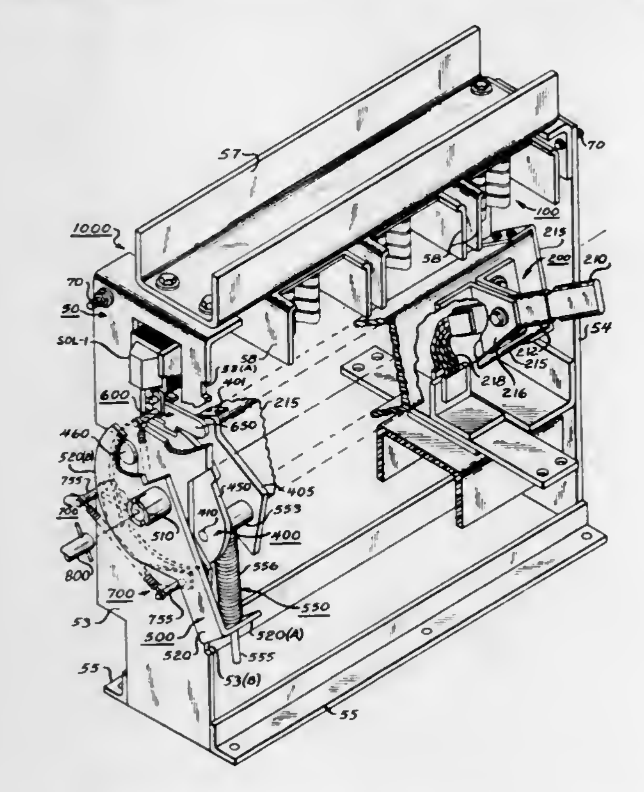

1. A modular vault-type load-break switch comprising
stationary electrical contact means for coupling to an electrical conductor to form an electrical circuit upon the closing of movable electrical contact means thereinto,
movable electrical contact means for coupling to an electrical conductor to form an electrical circuit upon closing into said stationary electrical contact means,
drive means operatively connected to said movable electrical contact means for applying a driving force thereto to close said movable electrical contact means into said stationary electrical contact means and to open said movable electrical contact means from engagement with said stationary electrical contact means,
control means operatively connected to said drive means for actuating said drive means to apply the driving force to said movable electrical contact means to effect movement of said movable electrical contact means in the direction in which said drive means applies the driving force, and
latch means for preventing the movement of said movable electrical contact means in a direction opposed to the movement effected by the driving force applied by said drive means thereby providing a positive closing of said movable electrical contact means into said stationary electrical contact means and a positive opening of said movable electrical contact means from engagement with said stationary electrical contact means.

4,061,897

HEATING PAD

Audrae Thykeson, 8340 SW. 65 Ave., Miami, Fla. 33143

Filed Jan. 23, 1976, Ser. No. 651,713

Int. Cl.² H05B *1/00*

U.S. Cl. 219—211 **7 Claims**

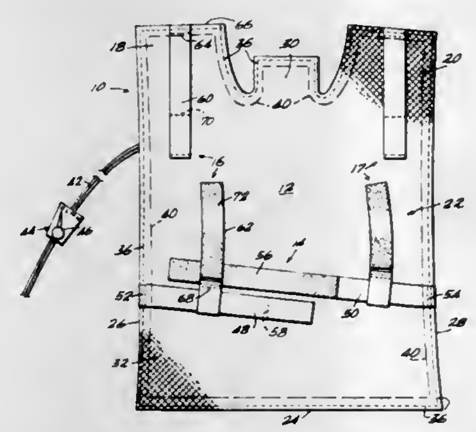

1. A heating pad comprising:
a main body portion formed of like front and back panels of a suitable fabric material, with a heating element sandwiched therebetween, said main body portion including an enlarged portion sized to selectively cover a predetermined portion of the back or front areas of the upper portion of a person's body, a pair of shoulder portions extending upwardly from said enlarged portion to engage over the respective shoulder areas of a person's body, and a neck portion, extending upwardly from said enlarged portion, to engage with back or front areas of a person's neck;
a generally transverse, adjustable belt means to maintain said enlarged portion in said selected position; and
a generally vertical, adjustable belt means, to maintain said shoulder portions in engagement over the shoulder areas.

4,061,898

HEAT CAP

John S. Murray, Granada Hills, and Sime Sunjara, Long Beach, both of Calif., assignors to Redken Laboratories, Inc., Canoga Park, Calif.

Filed Aug. 16, 1976, Ser. No. 714,851

Int. Cl.² H05B *1/00*

U.S. Cl. 219—211 **43 Claims**

1. A hair processing cap for applying heat to hair on the head of a human being comprising:
flexible cap means having an outer cover, an inner liner, and a hollow interior between the outer cover and the inner liner;
the cap means having a generally spherically-shaped closed position to conform to the shape of the head and to cover the area of the head within the hairline, the cap means in said closed position having a lower peripheral edge encircling the head in the temple area thereof;
means for opening the cap comprising an elongated first split extending inwardly from the peripheral edge at one side of the cap, and an elongated second split extending inwardly from the peripheral edge at an opposite side of the cap; each split forming a separate flexible and independently movable flap; fastening means on each flap; and cooperating fastening means located on a portion of the cap means adjacent each respective flap, the fastening means enabling the flaps to be selectively attached to different areas of the cap in the vicinity of the first and second splits to vary the three-dimensional contour of the cap means to conform to the shape of the head; and

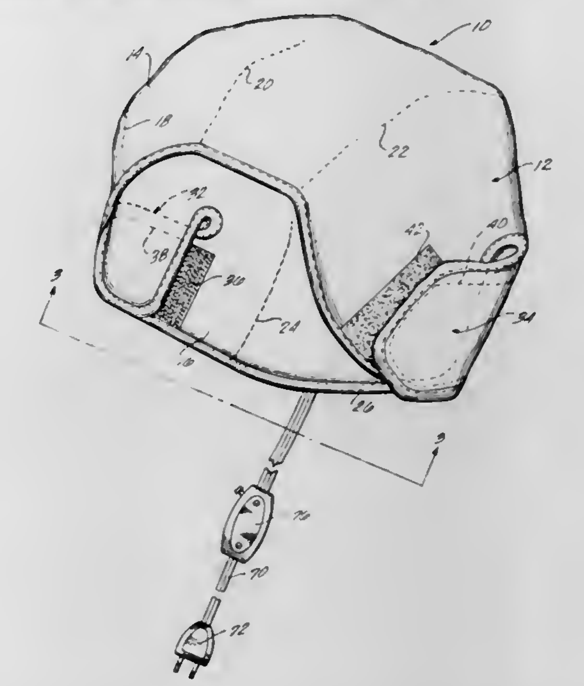

electrical heating means in the interior of the cap means and disposed over a substantial area of the cap means for directing heat outwardly to the portion of the head covered by the cap.

4,061,899

ARRANGEMENT FOR STABILIZATION AND IGNITION OF WELDING ARCS BY IGNITION PULSES

Max Gillitzer, Munich, and Franz Tajbl, Oberschleissheim, both of Germany, assignors to Messer Griesheim GmbH, Germany

Filed Oct. 15, 1975, Ser. No. 622,629

Claims priority, application Germany, Oct. 18, 1974, 2449557

Int. Cl.² B23K *9/06*

U.S. Cl. 219—131 R **5 Claims**

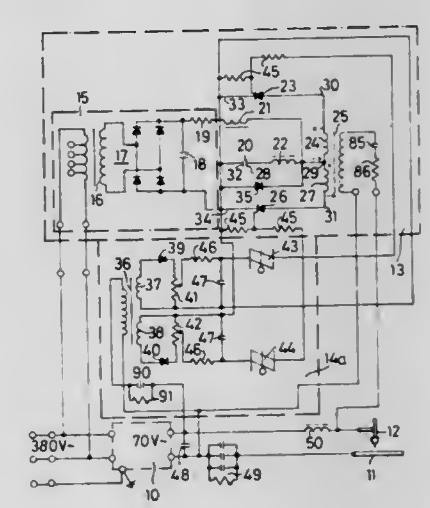

1. A device for stabilization of alternating current welding arcs and for the ignition of alternating current or direct current welding arcs by stablization or ignition pulses of alternate polarity, which pulses are generated by at least one discharged capacitor charged from a current source and discharged by a discharge circuit comprising two controllable discharge switches, rectifier means, and a pulse transformer with primary and secondary windings, each switch being connected to supply the transformer primary with discharge current in a different direction, the transformer secondary supplying the stabilization or ignition pulses, and the rectifier means being connected to form short-circuiting paths through the respective switches to dissipate from the transformer primary the energy liberated by its magnetic flux after each pulse, regardless of its polarity.

4,061,900
INDICIA VALIDATION SYSTEM
Francis John Masciarelli, Milford, Mass., assignor to Data General Corporation, Southboro, Mass.
Filed Apr. 16, 1976, Ser. No. 677,687
Int. Cl.² G06K *7/10;* **G08C** *9/06*
U.S. Cl. 235—437 **10 Claims**

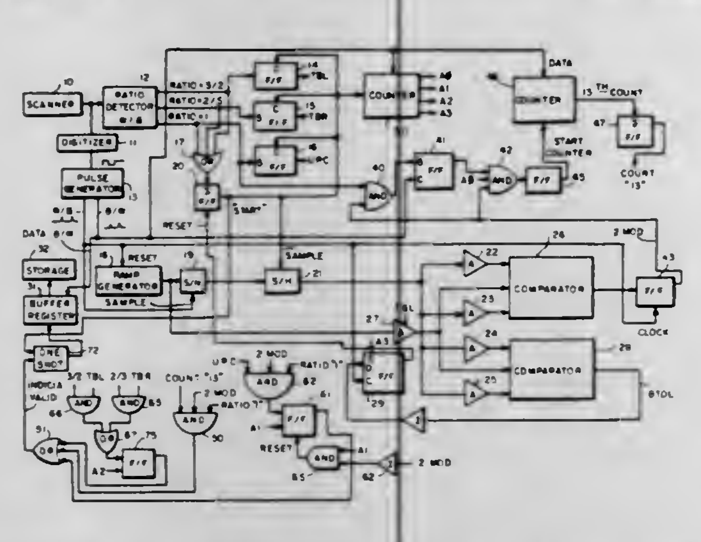

1. A system for validating data derived from UPC encoded indicia comprising
a. first means for providing a first signal indicating a count of 13 B/W transitions after the UPC guard bars are detected from said indicia;
b. second means for providing a second signal indicating if a band pair ratio equal to 1 is present in said indicia;
c. third means for generating a band pair tolerance signal from said indicia if said indicia is proper and
fourth means responsive to said first, second and band pair tolerance signal for generating an indicia valid signal if all said signals are present.

4,061,901
TELEMETERING SYSTEM
Jim G. Saunders, Mission Viejo, Calif., and Alfred B. Stucki, Brigham City, Utah, assignors to Thiokol Corporation, Newtown, Pa.
Filed Aug. 19, 1976, Ser. No. 715,736
Int. Cl.² G06M *3/14;* **G01F** *23/10*
U.S. Cl. 235—92 EV **9 Claims**

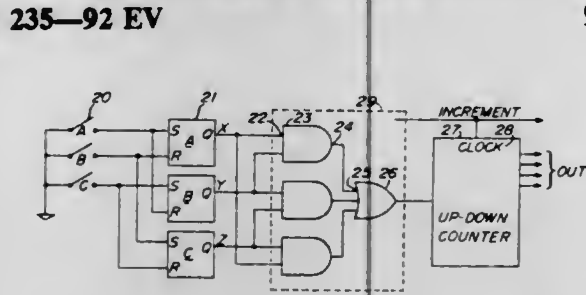

1. A system for automatically preparing digital data to describe changing liquid levels, comprising:
shaft means;
a support for the shaft means;
means coacting for rotating the shaft means in response to linear motion of the changing liquid level;
a magnet fixed eccentrically for rotation relativve to the shaft means;
three sensors (A, B, and C) capable of switching an electric circuit in response to magnetic flux from said magnet;
said support including means for supporting the sensors relative to the shaft means, so that they are positioned equidistantly from the shaft means and sufficiently close thereto to respond to proximity of the magnet as it is rotated by the shaft means;
three flip-flops, each having an R input, an S input, and an output, the R input of each flip-flop being connected to one of the sensors and the S input being connected to one different sensor, so that, when one of the sensors switches the circuit, the inputs of two flip-flops are changed and, hence, the outputs of two flip-flops are changed, but the output of a third flip-flop remains unchanged, whereby the outputs of the three flip-flops can provide a three digit, binary code capable of distinguishing clockwise and counterclockwise rotation of the shaft means, since one digit of each code is determined by the previous switch;
three AND gates, each having two inputs and one output, each input being connected to two adjacent flip-flop outputs, as arranged in circular sequence;
an OR gate having three inputs and an output, each input connected to an output of a different one of the AND gates; and
an up-down counter connected at its up-down input to the output of the OR gate and operatively at its increment input to the sensors.

4,061,902
DIGITAL TRAFFIC COORDINATOR
Francis L. Battle, Davenport, Iowa, assignor to Gulf & Western Industries, Inc., New York, N.Y.
Filed Mar. 3, 1976, Ser. No. 663,580
Int. Cl.² G06F *15/48*
U.S. Cl. 364—436 **28 Claims**

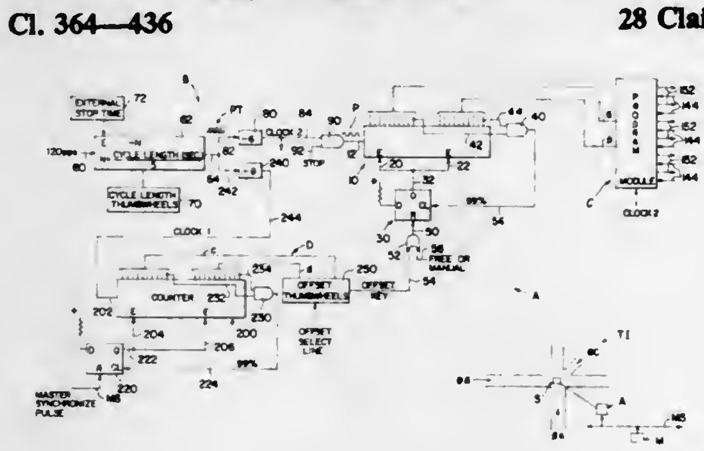

1. A coordinator for creating a background cycle and controlled logic conditions on selected output circuits during said background cycle, said cycle and logic conditions being used in governing the signalization of a traffic intersection, said coordinator comprising: a pulse counter having an input means for receiving input counting pulses, a codeable output network for creating a coded binary pattern, means for changing said pattern incrementally and progressively between a first code representing a first number N_1 and a second code representing a second number N_2 upon receipt of input counting pulses at said input means, means for shifting said pulse counter to said number N_1 upon receipt of a shift signal and means for creating said shift signal when said pattern progresses to the number N_2; means for creating input counting pulses having a frequency corresponding to a desired cycle time; means for starting said counter upon receipt of an offset signal, said starting means includes a digital device for creating an offset signal at a selected time after a master synchronization pulse from a remote master controller; and decoding means for creating said selected logic conditions in selected output circuits when said pattern has a selected code corresponding to a number in the range of N_1 to N_2.

4,061,903
DIGITAL COORDINATOR WITH SMOOTH TRANSITION FOR OFFSET CHANGES
Francis L. Battle, Austin, Tex., assignor to Gulf & Western Industries, Inc., New York, N.Y.
Continuation-in-part of Ser. No. 663,580, March 3, 1976. This application July 30, 1976, Ser. No. 710,288
Int. Cl.² G06F *15/48*
U.S. Cl. 364—436 **37 Claims**

1. In a digital coordinator for creating a background cycle defined by a series of control pulses repeatedly cycled between a first number, N_1, and a second number, N_2, with the time

space between the N_1 control pulse and the N_2 control pulse being a background cycle length, said coordinator comprising a primary pulse counter means incremented by input counting pulses for creating one in a series of said control pulses in response to a selected number of input counting pulses, said input counting pulses having a frequency for determining the cycle speed of progression of said control counts in successive count positions between the N_1 control pulse and the N_2 control pulse of a given background cycle, and shifting means for shifting said N_1 control pulse with respect to time to correspond in time with a signalization offset signal, the improvement comprising: said shifting means including a counting

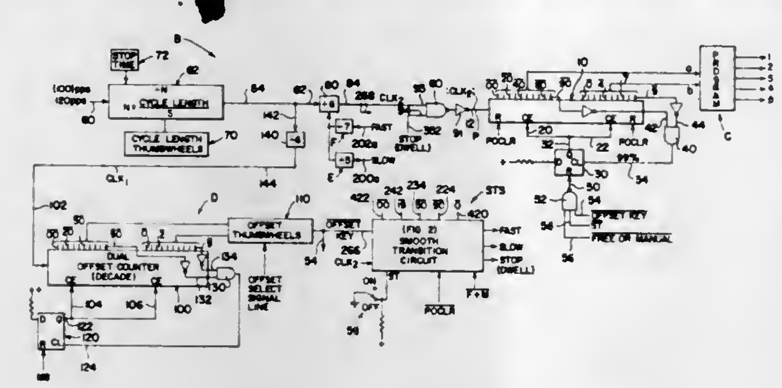

circuit for counting count pulses created by and corresponding to said input counting pulses during a given background cycle and from a selected count position in said given cycle; a response means for creating a control logic signal in response to a signalization offset signal occurring before a given count position in said given cycle; first means responsive to said control logic signal for creating a stop signal; second means responsive to said control logic signal for storing the number of count pulses counted by said counting circuit prior to said offset signal; means responsive to said stop signal for preventing said counting pulse from incrementing said primary counting means; and, means for holding said stop signal for a time controlled by said number of count pulses.

4,061,904
VARIABLE ANALOG FUNCTION GENERATOR
George Hannauer, E. Windsor, and Abhaya Asthana, Long Branch, both of N.J., assignors to Electronic Associates, Inc., Long Branch, N.J.
Filed Mar. 3, 1976, Ser. No. 663,297
Int. Cl.² G06J *1/00;* **G06G** *7/28*
U.S. Cl. 364—608 **24 Claims**

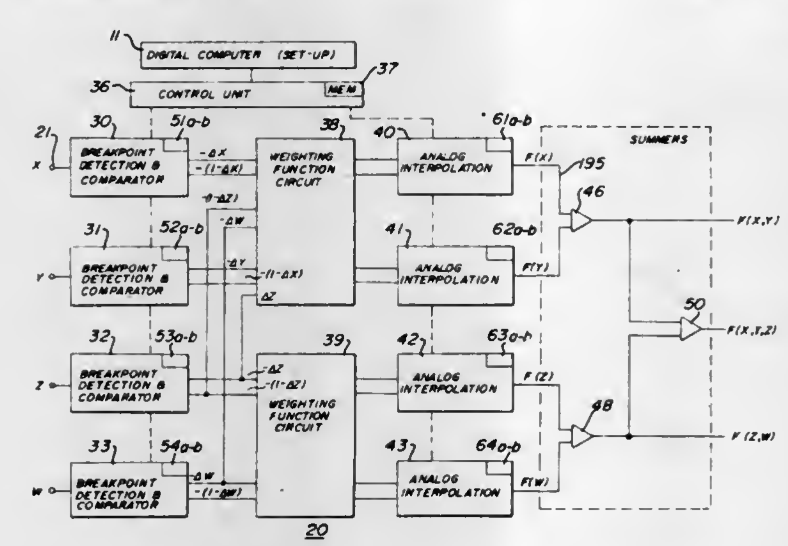

1. A variable analog function generator independent of external data source and control during time of generation of at least one predetermined output function of at least one input variable with said output function expressed in terms of hybrid variables each having an analog portion and a digital portion comprising
first dedicated memory means having stored therein data related to breakpoints defining the input variable,
second dedicated memory means having stored therein tables of values defining said digital portion,
means for generating said analog portions independent of said external data source and control in response to (1) the input variable and (2) said data related to the breakpoints accessed in parallel from said first dedicated memory means, and,
means for generating said output function independent of said external data source and control in response to (1) said analog portions and (2) said tables of values accessed from said second dedicated memory means.

4,061,905
FILTER HAVING FREQUENCY-DEPENDENT TRANSMISSION PROPERTIES FOR ELECTRIC ANALOG SIGNALS
Alfred Fettweis, Bochum, Germany, assignor to Siemens Aktiengesellschaft, Berlin & Munich, Germany
Division of Ser. No. 402,348, Oct. 1, 1973, Pat. No. 3,967,099, which is a continuation of Ser. No. 148,577, June 1, 1971, abandoned. This application Apr. 2, 1976, Ser. No. 672,884
Claims priority, application Germany, June 3, 1970, 2027303
Int. Cl.² G06F *15/34;* **H03H** *7/10*
U.S. Cl. 364—724 **13 Claims**

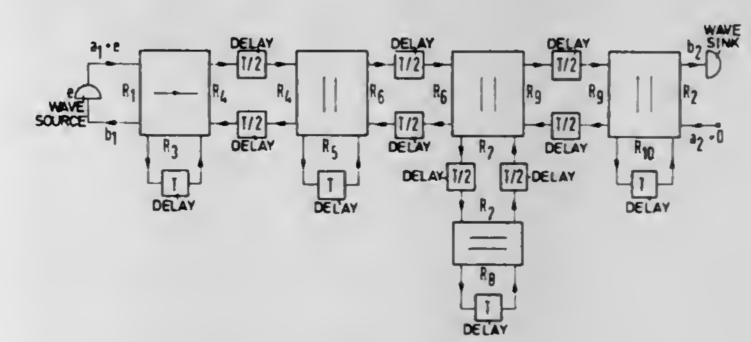

1. A filter for discrete signals,
a. said filter comprising a filter circuit operating on discrete signals and having a filter function for discrete signals corresponding to the frequency-dependent transmission properties for electric analog signals of an analog ladder structure having a predetermined configuration of interconnected analog components including at least three reactive analog components with respective impedance-representing constants;
b. said filter circuit for discrete signals having a plurality of port elements including ports each with a port input and a port output terminal, at least certain of said plurality of port elements corresponding in filter function to reactive analog components of the analog ladder structure and such certain port elements comprising time delay means interposed between port input and output terminals thereof, each time delay means providing a time delay which is a function of a given time interval and being operable for receiving an input signal from an associated input terminal at a discrete time and for supplying an output signal to an associated output terminal at a discrete time thereafter in accordance with said time delay; the ports of said port elements being assigned port impedance numbers in accordance with the impedance-representing constants of the analog ladder structure corresponding thereto, and
c. said filter circuit comprising interface device means having interface ports connected with the ports of said port elements and interconnecting the port elements in accordance with the configuration of said analog ladder structure, and said interface ports including sets of interface ports connecting with sets of port elements corresponding to sets of connected analog components of the analog ladder structure;
d. the interface device means having interface circuitry including adder means and multiplier means connected with each of the sets of interface ports for interchange of

signals with ports of the port elements connected with such interface ports, each such multiplier means having a multiplier coefficient correlated with the port impedance numbers of the respective ports of said port elements interchanging signals therewith.

4,061,906
COMPUTER FOR NUMERIC CALCULATION OF A PLURALITY OF FUNCTIONALLY INTERRELATED DATA UNITS
Wolfgang Grebe, Enzianweg 10, Starnberg, and Siegfried Buhlmann, Hubertusstrasse 10, Neugermering, both of Germany
Filed Apr. 26, 1976, Ser. No. 680,197
Claims priority, application Germany, Apr. 28, 1975, 2518887
Int. Cl.² G06F *15/32*
U.S. Cl. 364—735 **11 Claims**

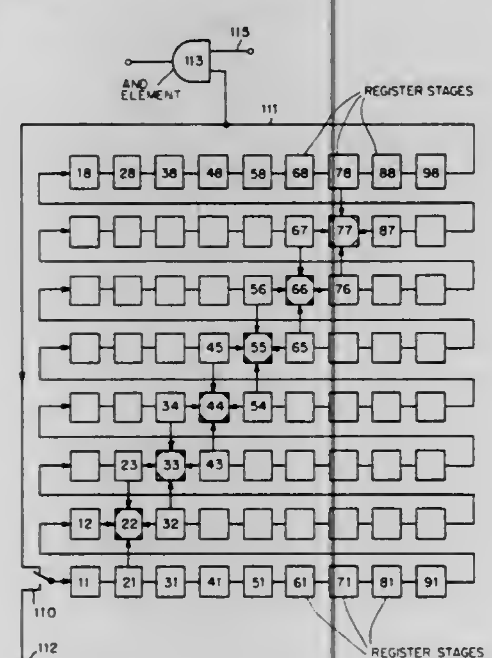

1. In a computer for numeric calculation of a plurality of functionally interrelated data units, each data unit corresponding to a point of a grid, the grid being arranged in rows and columns and covering a domain of solutions, using mathematical operations involving data units associated with grid points adjacent a preselected grid point and including a cyclic memory having at least as many storage cells as the grid has grid points, each storage cell storing a corresponding grid point data unit; means for storing information in at least one of the storage cells; shifting means for cyclically shifting cell-by-cell the information contained in the storage cells; a plurality of computing means, each computing means capable of being connected to more than one storage cell; and means for retrieving information from the cyclic memory when a calculation has been carried out, the improvement wherein:

each storage cell includes a first memory location for storing the corresponding grid point data unit and a second memory location for storing a code associated with the grid point data unit stored in the first memory location, the code containing information for controlling and processing the grid point data unit stored in the first memory location; and wherein each computing means is connected to a respective preselected storage cell and the storage cells storing smultaneously, at a predetermined time of each complete shift cycle, the grid point data units of grid points adjacent, in row and column direction of the grid, the grid point corresponding to said respective preselected storage cell at the predetermined time, each computing means being controlled by the code stored in the second memory location of said respective preselected storage cell for calculating a new grid point data unit for the grid point corresponding to said respective preselected storage cell using the grid point data units of the adjacent grid points.

4,061,907
INTERPOLATOR FOR A NUMERICALLY CONTROLLED MACHINE WITH STEP SIZE SELECTED IN RESPONSE TO FEED RATE
Kiyokazu Okamoto, and Hitoshi Hayashi, both of Tokyo, Japan, assignors to Nippon Electric Company, Ltd., Tokyo, Japan
Filed July 19, 1976, Ser. No. 706,322
Claims priority, application Japan, July 17, 1975, 50-87710
Int. Cl.² G06F *15/46*
U.S. Cl. 364—718 **4 Claims**

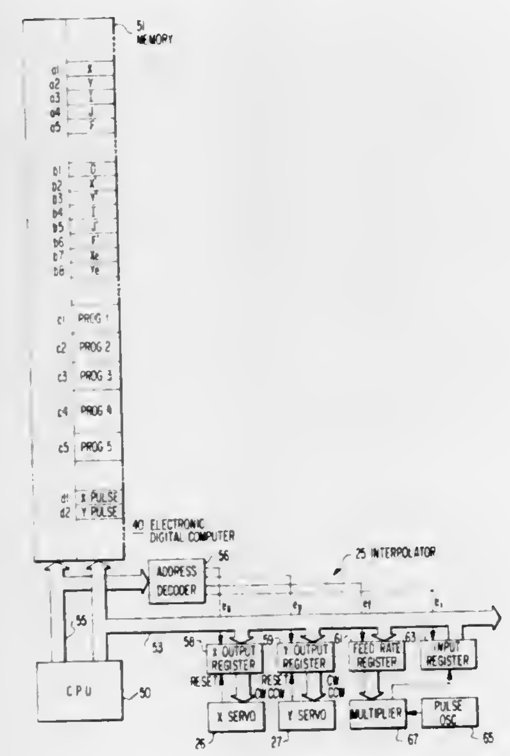

1. An interpolator responsive to a set of input signals for each block for successively producing a plurality of distribution signals for a numerically controlled machine, said input signals comprising a set of displacement signals and a feed rate signal, said displacement signals being representative of conventional displacement data specifying said each block in terms of a conventional step size, said feed rate signal being representative of a feed rate defining, in turn, a conventional pulse distribution rate, said distribution signals being representative of those commanded positions substantially along said each block which said numerically controlled machine should follow at said feed rate, wherein the improvement comprises:

step size means responsive to said feed rate signal for selecting a working step size to produce a step size signal representative of said working step size;

working data means responsive to said step size signal and said input signals for producing working signals representative of working displacement data and a working pulse distribution rate, the ratio of said working displacement data to said conventional displacement data and the ratio of said working pulse distribution rate to said conventional pulse distribution rate being substantially equal to the ratio of said conventional step size to said working step size; and

pulse distribution means responsive to said working signals for producing said distribution signals at said working pulse distribution rate, said distribution signals being now representative of said commanded positions in terms of said working step size.

4,061,908
METHOD OF AND DEVICE FOR TESTING A DIGITAL MEMORY
Jan Hendrik de Jonge, Beekbergen, and Adrianus Josephus Smulders, Hoogland, both of Netherlands, assignors to U.S. Philips Corporation, New York, N.Y.
Filed Dec. 23, 1975, Ser. No. 643,622
Claims priority, application Netherlands, Dec. 23, 1974, 7416755
Int. Cl.² G11C *29/00;* H03K *5/18*
U.S. Cl. 235—302.3 **11 Claims**

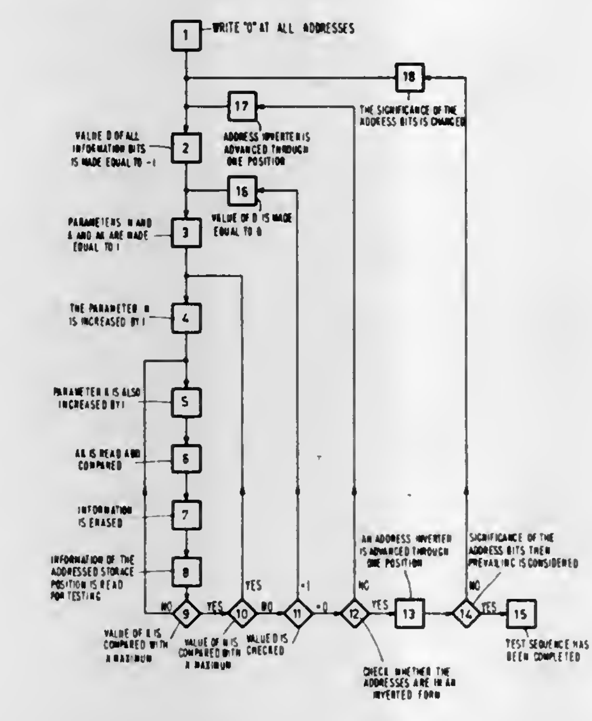

1. A method of testing memories, in which a predetermined first number of discrete, random addressable, storage positions for binary information is provided with each storage position having a specific address, said first number being at least substantially equal to 2^N and the addresses containing N binary information elements of successive significance in accordance with a first order, comprising the steps of

filling the storage positions first with a first information,

subsequently reading the storage positions during a first cycle in accordance with a first address sequence for the purpose of testing in that the address is each time changed by one unit,

subsequently filling the addressed storage positions with changed information with respect to the read-out,

reading the storage positions again for the purpose of testing in accordance with the reverse of the first address sequence, and

filling again said storage positions with changed information with respect to the latter read-out,

repeating said first cycle during a second cycle, the storage positions being assigned a different sequence in that the order of significance of the said N binary information element is modified.

4,061,909
VARIABLE WAVEFORM SYNTHESIZER USING DIGITAL CIRCUITRY
A. William Bryant, 3457 Eye St., Eureka, Calif. 95501
Filed July 23, 1975, Ser. No. 598,500
Int. Cl.² H03K *13/00*
U.S. Cl. 364—851 **7 Claims**

1. A variable waveform synthesizer for accepting a digital pulse train of a predetermined period and constructing therefrom a variety of multi-valued waveform approximations comprising:

counting means for receiving the digital pulse train and sequentially assuming in response thereto N separate and distinct digital states;

pulse generating means responsive to the digital pulse train for generating a digital pulse stream of pulses each of the pulses of the digital pulse stream being less than the predetermined period of the digital pulse train, the pulse generating means including means for varying the width of the pulses;

decoding means responsive to the counting means for decoding at most N digital states and including at most N individual outputs, each decoder output activated in a predetermined order in response to the digital states assumed by the counting means;

combining means responsive to the pulse generating means and the decoding means outputs and having a number of

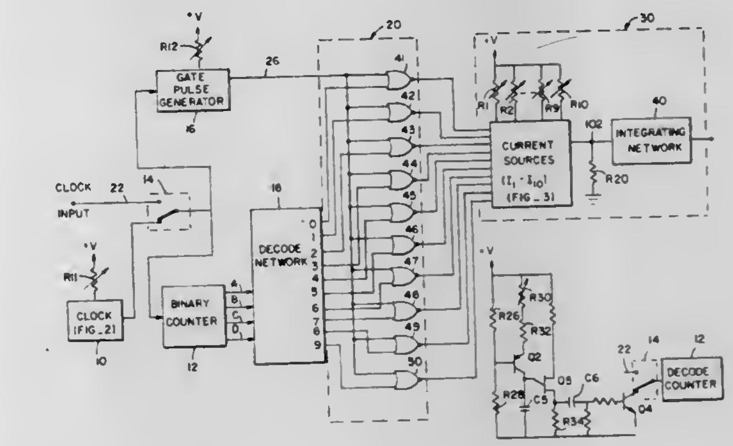

combining means outputs in one-to-one relation with each of the decoder means outputs so that the width of the pulses output from the combining means will be determined by the coincidence between the pulse generator output and the decoder outputs; and

synthesizing means for accepting the outputs of the combining means and generating therefrom a pulse of a predetermined amplitude for each activated decoder output and including output means responsive to said pulses for constructing therefrom a multi-valued waveform approximation.

4,061,910
LUMINESCENT JEWELRY
Steven Allen Rosenfeld, New York, N.Y., assignor to Barry G. Magidoff, New York, N.Y., a part interest
Filed Feb. 2, 1976, Ser. No. 654,506
Int. Cl.² F21V *9/16;* A44C *13/00*
U.S. Cl. 362—34 **3 Claims**

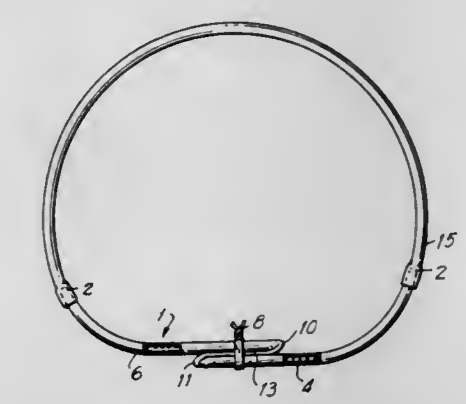

1. An article of jewelry adapted to be worn on the body of a person comprising wearing means for attaching the jewelry to the body of a wearer; a flexible walled tube formed of a light-transmitting material, sealed at both ends of the tube and being folded at two intermediate locations in such a manner that the opposing interior surfaces of the flexible tube walls are in sealing contact at these two locations, thereby defining a sealed intermediate chamber therebetween and at least two additional end chambers between each fold portion and its nearest sealed end; and a chemiluminescent component contained in each of the two end chambers, the intermediate chamber being substantially free of a chemiluminescent component, whereby unfolding the tube, so as to permit the interior walls

to move out of sealing contact permits the mixing of the components to produce chemiluminescence in a connected, single compartment.

4,061,911
AUTOMATICALLY SWITCHED SPARE LAMP FOR A LIGHT PROJECTOR
Thomas L. Krasin, Darien, Ill., assignor to Audio Visual Innovators Corporation, Darien, Ill.
Filed Apr. 14, 1976, Ser. No. 676,746
Int. Cl.² H05B *39/10*
U.S. Cl. 362—20 **10 Claims**

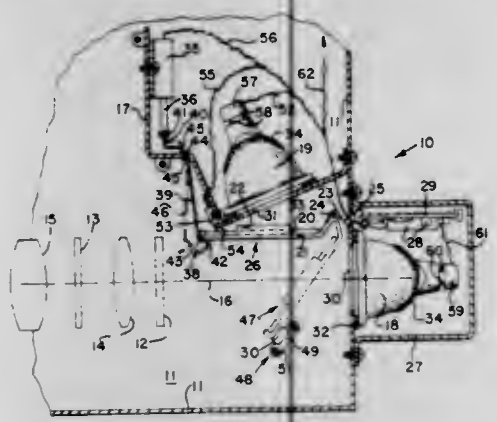

1. A lamp system for a projector, said projector having a frame and at least one projection lens with an optical axis associated therewith, said system comprising:
a main lamp with a highly directional light pattern fixedly mounted in relationship to said frame, said lamp and the light pattern thereof aligned with the optical axis of said projection lens;
a spare lamp with a highly directional light pattern fixedly mounted in relationship to said frame, at a location not in alignment with the optical axis of said projection lens;
sensing means for detecting the failure of said main lamp, and for automatically energizing said spare lamp upon failure of said main lamp; and
low mass reflecting means positionable between a first position whereat said reflecting means does not obstruct nor effect light transmission between said main lamp and said projection lens before failure of said main lamp, and a second position whereat said reflecting means reflects light from the automatically energized spare lamp along the optical axis of said projection lens.

4,061,912
FILAMENT ALIGNMENT MECHANISM FOR FOLLOW SPOT OR THE LIKE
Craig Levasseur, Calabasas, Calif., assignor to Berkey-Colortran, Inc., Burbank, Calif.
Filed Oct. 26, 1976, Ser. No. 735,698
Int. Cl.² F21V *19/02*
U.S. Cl. 362—287 **6 Claims**

1. In a stage luminaire or the like:
a. a luminaire housing including a reflector housing section and a lamp housing section, said lamp housing section having a rear wall formed substantially as a spherical segment;
b. a reflector mounted in said reflector housing section and having a central access opening;
c. a lamp socket support located between said reflector and said rear wall of said lamp housing section;
d. a lamp socket carried by said support;
e. a manual actuating element located outside said rear wall and conforming to the external spherical configuration thereof;
f. a draw screw connection between said socket support and said manual actuating element, including a part projecting through a clearance hole in said rear wall;
g. spring means urging said support towards said reflector and frictionally urging said manual actuating element into engagement with said rear wall;
h. said socket support being supported only by the frictional engagement of said actuator with said wall section;
i. said rear wall having a center of curvature located forwardly of said wall and substantially at the central access

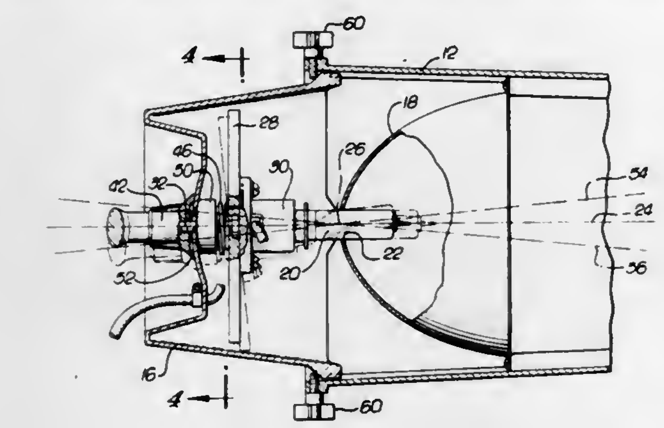

opening of said reflector whereby sliding movement of said actuator across said spherical wall sectional laterally positions a lamp supported by said lamp socket;
j. means limiting angular movement of said support in said housing whereby rotation of said actuator advances and retracts said lamp socket.

4,061,913
COLLAPSIBLE LAMP SHADE FRAME
Joseph D. Ross, 114 Angas Road, Westbourne Park, South Australia, Australia (5041)
Filed Dec. 11, 1975, Ser. No. 639,814
Claims priority, application Australia, Dec. 18, 1974, PC0050/74
Int. Cl.² F21V *1/06*
U.S. Cl. 362—357 **7 Claims**

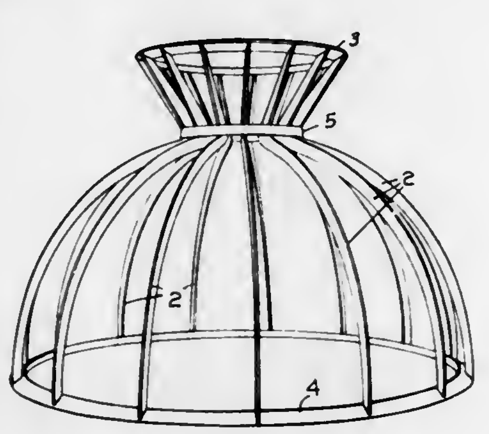

1. A lamp shade assembly comprising a series of ribs, and annular spacers for the said ribs, the said ribs being planar members shaped to stack together as a pack and being assemblable on the spacers to define an annular lamp shade shape, a main spacer to engage the ribs intermediate the ends thereof, and further spacers which are positioned to engage the ribs remotely from the main spacer on each side thereof, which spacers are themselves spaced apart by the said ribs, said spacers having interlocking configuration for the ribs at spaced intervals, said spacers and ribs being of a configuration whereby the ribs are held in interlock with the spacers by flexure of the materials from which at least the said ribs are formed.

4,061,914
METHOD AND APPARATUS FOR DUAL RESOLUTION ANALYSIS OF A SCENE
James Edmond Green, P.O. Box 734, Fayetteville, Tenn. 37334
Continuation-in-part of Ser. No. 526,896, Nov. 25, 1974, Pat. No. 3,970,841. This application May 4, 1976, Ser. No. 682,970
The portion of the term of this patent subsequent to July 20, 1993, has been disclaimed.
Int. Cl.² H01J *39/12;* **G01N** *33/16*
U.S. Cl. 250—201 **18 Claims**

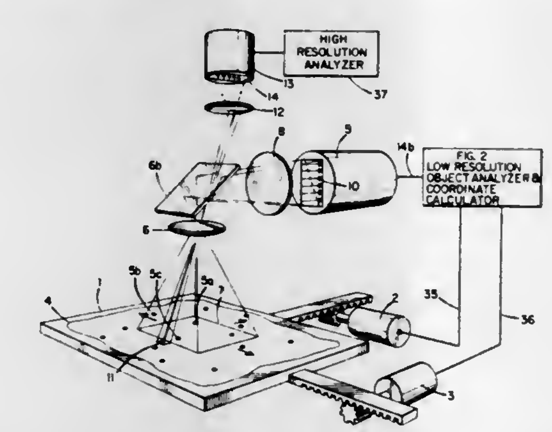

6. A dual resolution scanning apparatus comprising:
means for positioning a sample;
means for scanning a positioned sample at a low resolution, said low resolution scanning means having a low resolution field of view;
means for detecting when a sample object is encountered during the low resolution scan;
means for analyzing the detected sample object to determine if it is an object of interest;
means for scanning the object of interest at a higher resolution, said high resolution scanning means having a high resolution field of view;
means responsive to said object detection means for initiating the object scanning by said high resolution scanning means while said low resolution scanning means continues to scan the sample to detect any other objects in the sample without moving the sample relative to at least one of said resolution fields of view.

4,061,915
METHOD AND APPARATUS FOR MAKING X-RAY IMAGES
Josef Pfeifer, Unterhaching; Alfred Rheude, and Jürgen Müller, both of Munich, all of Germany, assignors to AGFA-Gevaert Aktiengesellschaft, Leverkusen, Germany
Filed June 8, 1976, Ser. No. 693,912
Claims priority, application Germany, June 13, 1975, 2526415
Int. Cl.² G03G *15/00*
U.S. Cl. 250—315 A **40 Claims**

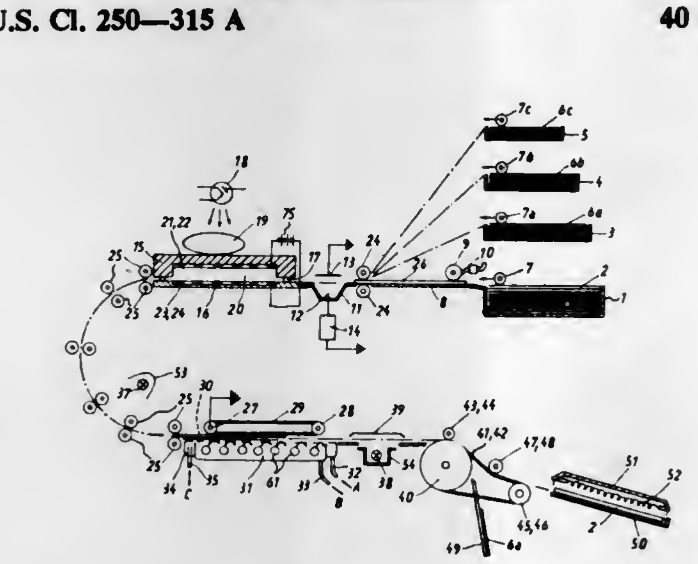

1. In a method of making X-ray images on sheet-like dielectric receptors which are exposed to object-modulated X-rays in the interelectrode gap of an ionography imaging chamber to produce thereon latent images which are made visible by xerographic techniques at a developing station, the steps of separably attaching each receptor to one side of a discrete sheet-like carrier which is at least partially conductive and extends beyond the respective receptor; and individually transporting the thus attached receptors in a predetermined direction toward, through and past said imaging chamber by way of the respective carriers.

4,061,916
SILICON-INSULATOR-POLYSILICON INFRARED IMAGING DEVICE AND METHOD OF MAKING SAME
Gerard J. King, Alexandria, and Joseph F. Martino, Jr., Falls Church, both of Va., assignors to The United States of America as represented by the Secretary of the Army, Washington, D.C.
Filed Nov. 1, 1976, Ser. No. 737,369
Int. Cl.² H01J *31/49*
U.S. Cl. 250—332 **8 Claims**

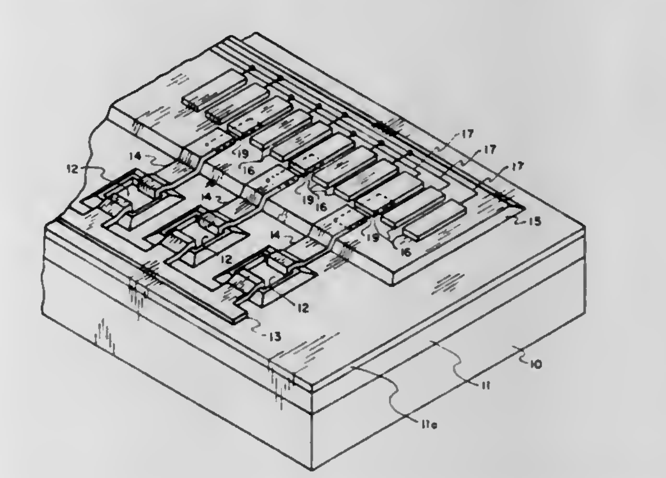

1. An imaging infrared detector device including a support substrate:
an insulating layer on one side of said substrate;
an array of infrared detectors on said insulating layer;
a CCD on said insulating layer including an array of unit cells at least equal in number to the number of detectors, each unit cell including a coupling region; and
electrical lead means including a common connector to one side of each of said detectors, individual connectors from an opposite side of each of said detectors to a respective CCD coupling region, and drive connectors for said CCD.

4,061,917
BOLOMETER
Rex W. Goranson, Star Rt. Box 14, Placitas, N. Mex. 87043, and Raymond V. Wick, 10421 Karen NE., Albuquerque, N. Mex. 87111
Filed May 24, 1976, Ser. No. 688,970
Int. Cl.² G01T *1/24*
U.S. Cl. 250—338 **9 Claims**

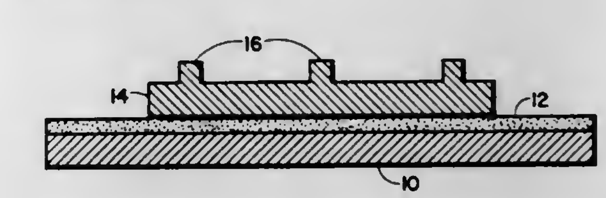

1. A thin film bolometer for the detection of radiation and to provide X and Y positions of the input radiation relative to fixed coordinates and a measure of the radiation which comprises:
A film of heat conducting material;
A thin film of bismuth on said material;

At least a pair of contacts formed on said film of bismuth; and

A circuit including a source of D.C. voltage connected to said contacts to generate signals as functions of incident radiation position and a further signal which is a function of radiation intensity.

4,061,918

MEASUREMENT OF LOW CONCENTRATION GASES

Horst Preier, Am Forsthaus Gravenbruch 33, 6078 Neu-Isenburg, and Wolfgang Riedel, Bergstr. 24, 6051 Waldacker, both of Germany

Filed Aug. 11, 1975, Ser. No. 603,701

Claims priority, application Germany, Sept. 8, 1974, 2438294

Int. Cl.[2] **G01J** *3/42*

U.S. Cl. 250—343 **11 Claims**

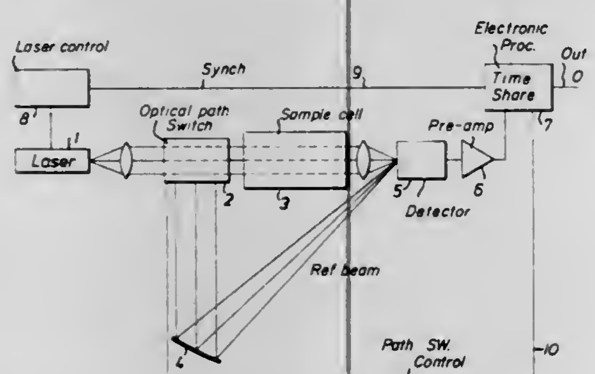

1. Method of determining the concentration of a particular, infrared absorbing gas in a host gas under pressure and contained therein at a small concentration comprising the steps of:

providing laser generated infrared radiation including varying the frequency of the generated narrow-banded radiation to obtain at least two different and distinct laser frequencies but with in the range of a pressure widened band of an infrared absorption line;

detecting, sampling and holding sequentially and separately for each of said frequencies, the intensity of the emitted radiation as provided; detecting, sampling and holding sequentially and separately for each of said frequencies the intensity of the radiation as provided after said latter radiation has traversed a path that contains said host gas and the particular gas;

forming signal representations of the quotients of said intensities as measured pursuant to said measuring steps and separately for each said frequencies, said quotients each being the relative transmission for each of said frequencies; and

processing the signal representations electrically to obtain a representation of the concentration of the particular gas in the host gas.

4,061,919

GAMMA CAMERA SYSTEM

Don W. Miller, Westerville, and Mark S. Gerber, Columbus, both of Ohio, assignors to The Ohio State University, Columbus, Ohio

Filed July 6, 1976, Ser. No. 702,981

Int. Cl.[2] **G01T** *1/20*

U.S. Cl. 250—363 S **41 Claims**

1. In a system for imaging the distribution within a region of interest of isotopic materials emitting radiation of given photon energy, said system including composite solid state detector means having a plurality of discrete components which are operationally associated to provide spatial coordinate parameter outputs representative of the spatial disposition of corresponding interactions of said radiation with said detector means, the improvement comprising:

first output treating means connected to receive said spatial coordinate parameter outputs of said detector means components, actuable to selectively filter and sum said outputs to derive corresponding coordinate channel signals and an energy channel signal having values corresponding respectively with said spatial disposition and given photon energy exhibited at a said interaction, said first output treating means further including control means for effecting said actuation to filter and sum and for deriving a data acceptance signal in correspondence with said coordinate and energy channel signals, said control means being responsive to a received reset signal to reset said first output means to a clear condition;

means including spatial coordinate multiplexer means and energy channel multiplexer means respectively coupled to be addressed by said energy channel signals, each said

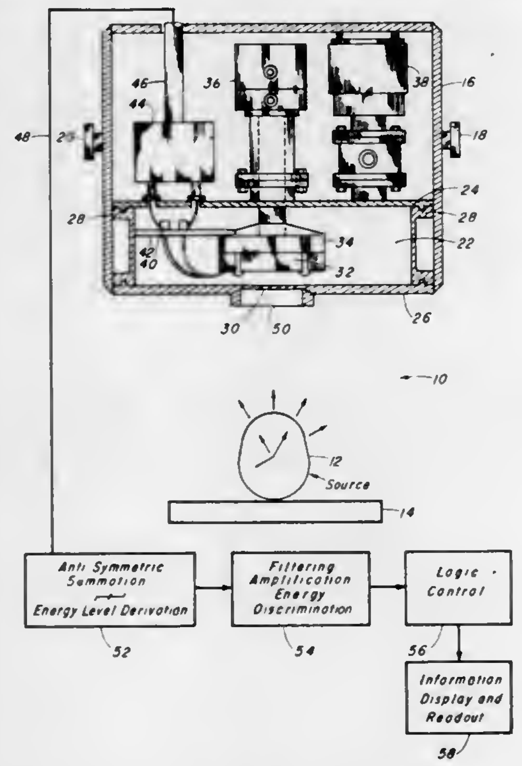

multiplexer means being responsive to a coded actuating signal to effect a transference of said channel signals addressed thereto;

process control means including memory means for receiving said data acceptance signals and selectively retaining them in received serialized fashion, and actuable to derive said coded actuating signal in correspondence with said serialized data acceptance signals;

sequential control means for selectively actuating said process control means and regulating an operational cycle of said system; and

second treating means responsive to said transferred channel signals for deriving readout information representative thereof.

4,061,920

X-RAY INSTALLATION COMPRISING AN IMAGE INTENSIFIER/IMAGE PICK-UP TUBE SYSTEM AND AN AUTOMATIC X-RAY EXPOSURE DEVICE

Ralf Möllendorf, Ahrensburg, and Peter Lux, Hamburg, both of Germany, assignors to U.S. Philips Corporation, New York, N.Y.

Filed Mar. 15, 1976, Ser. No. 666,652

Claims priority, application Germany, Mar. 15, 1975, 2511523

Int. Cl.[2] **H05G** *1/30*

U.S. Cl. 250—413 **5 Claims**

1. X-ray apparatus, comprising:

means for producing a fluoroscopy image of an object, the image being subdivided into a multiplicity of sub-fields;

means for deriving maximum and minimum image intensities from the image intensities of the sub-fields;

means for deriving from the maximum and minimum image intensities an intermediate image intensity dependent upon the type of X-ray exposure subsequently desired of the object;

means for deriving a mean image intensity in sub-fields constituting a central measuring field;

means for deriving a switch-off dose by comparing the mean image intensity with the intermediate image intensity and adding the difference to a fixed value independent of the type of X-ray exposure subsequently desired;

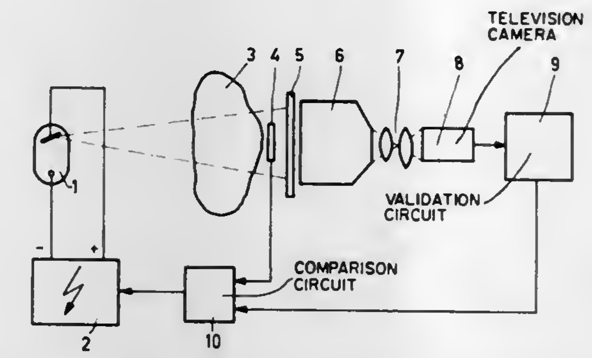

means for measuring an X-ray dose in the central measuring field; and

means for comparing the measured X-ray dose during a subsequent exposure of the object with the derived switch-off dose and for terminating the exposure when they are equal.

4,061,921

INFRARED LASER SYSTEM

Cyrus D. Cantrell, Santa Fe; Robert J. Carbone, and Ralph S. Cooper, both of Los Alamos, all of N. Mex., assignors to The United States of America as represented by the United States Energy Research & Development Administration, Washington, D.C.

Filed May 2, 1974, Ser. No. 466,583

Int. Cl.[2] **H01S** *27/00;* **H01J** *3/00*

U.S. Cl. 250—423 P **9 Claims**

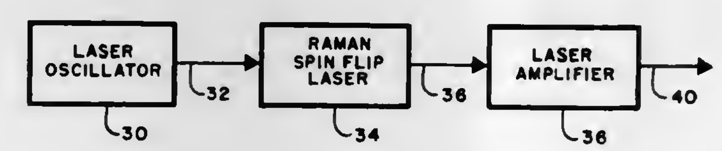

9. A method for producing a high power laser beam for selective excitation of a desired isotope specie in a gaseous mixture of isotope species comprising generating an infrared laser beam at a first wavelength; shifting the first wavelength of said laser beam to a second wavelength; amplifying said second wavelength laser beam to said high power; irradiating said gaseous mixture with said high power laser beam to selectively excite said desired isotope specie; and shifting said second wavelength laser beam to a wavelength coincident with a vibrational state of said desired isotope specie separate from vibrational states of said other isotope species in said gas mixture.

4,061,922

ULTRAVIOLET SENSING DEVICE

Anthony J. Last, Aakville, Canada, assignor to John S. Ewald, Cuernavaco Morelos, Mexico

Filed May 17, 1976, Ser. No. 686,788

Int. Cl.[2] **G01N** *21/38*

U.S. Cl. 250—461 R **1 Claim**

1. A fail-safe control for an ultraviolet water purifier comprising:

a housing;

on one side of said housing, a window for admitting ultraviolet radiation;

on the side of said housing opposite said window, a fluorescent screen which emits visible light in response to ultraviolet irradiation;

a photoconductive cell responsive to visible light, said photoconductive cell being oriented within said housing to receive visible light emitted by said screen while being shielded from ultraviolet radiation entering through said window;

electromechanical means for controlling the flow of water through said purifier;

voltage divider means including said photoconducitve cell

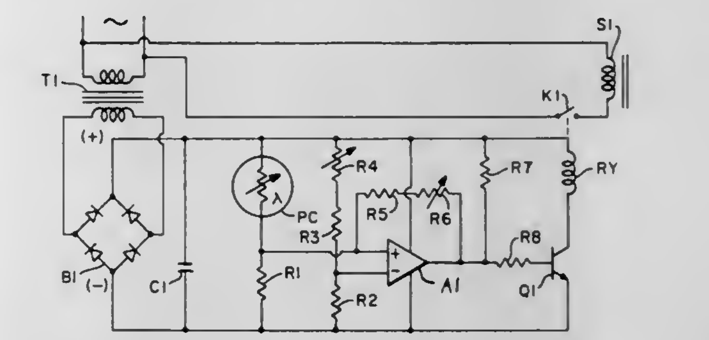

for providing a voltage which varies in response to the illumination of said photoconductive cell;

voltage divider means for generating a reference voltage; and

electronic means interconnected with said divider means for controlling the electrical energization of said electromechanical means as a function of the relative values of said voltages.

4,061,923

RECEPTACLE FOR RADIOGRAPHIC FILM MATERIAL

Lucas van der Does, Oenkerk, Netherlands, assignor to N.V. Optische Industrie "de Oude Delft", Delft, Netherlands

Filed Apr. 2, 1976, Ser. No. 673,093

Claims priority, application United Kingdom, Apr. 11, 1975, 14969/75

Int. Cl.[2] **G03B** *41/16*

U.S. Cl. 250—468 **3 Claims**

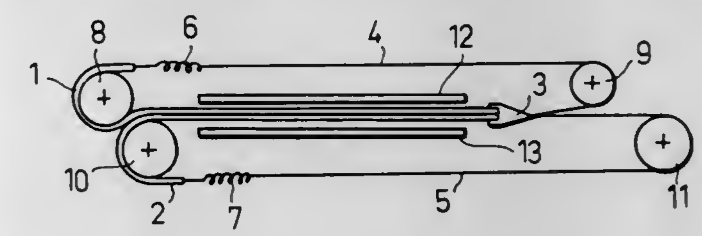

1. A radiographic film transport for X-ray equipment which comprises:

a first pair of parallelly-disposed rollers including a lead roller and a back roller;

a second pair of parallelly-disposed rollers including a lead roller and a back roller, said lead rollers of said first and second pair of rollers cooperating to form a nip therebetween;

a first fluorescent screen;

a second fluorescent screen;

a coupling member for linearly coupling one end of each of said first and second fluorescent screens;

a first connecting means connecting the other end of said first fluorescent screen to said coupling member for coursing said first fluorescent screen including first connecting means about said first pair of parallelly-disposed rollers;

a second connecting means connecting the other end of said second fluorescent screen to said coupling member for coursing said second fluorescent screen including second connecting means about said second pair of parallelly-disposed rollers;

motive means for moving said first and second fluorescent screens about said first and second pair of parallelly-disposed rollers to cause said coupling member to move between said lead rollers and said back rollers thereby to permit the introduction of film material between said fluorescent screens when said coupling member moves in

one direction and to deliver film material when said coupling member moves in an opposite direction.

4,061,924
UNIVERSAL ANGULOMETER
Marvin Jacoby, 166 Sherry Lake Apt., Conshohocken, Pa. 19428, and Guido A. La Porta, 6 Heather Drive, Marlton, N.J. 08053
Filed June 25, 1975, Ser. No. 590,051
Int. Cl.² G03B *41/16*
U.S. Cl. 250—476 **7 Claims**

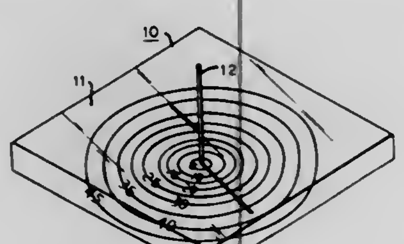

1. An angulometer for recording on radiation sensitive film at the time of exposure, both the direction of an incident radiation beam and the angle which the beam makes with the normal to the plane of the film, comprising in combination,
a. a flat planar radiation transparent plate;
b. a radiation opaque small diameter cylindrical rod fixedly mounted perpendicularly to the plane of said plate with its lower end extending through said plate and being coincident with the bottom surface of said plate, and
c. a set of concentric radiation opaque angulation indicator circles formed in the bottom surface of said plate, said circles having their common center coincident with the longitudinal central axis of said rod,

whereby, when the angulometer is placed on the radiation sensitive film adjacent to the object to be irradiated prior to radiation exposure, and irradiated together with the object, a shadow image is produced on the developed film showing the radiation opaque concentric circles and rod, the length of the rod shadow measuring the angle of the radiation to the rod, and the direction of the shadow showing the direction of the radiation with respect to the object irradiated.

4,061,925
METHOD AND APPARATUS FOR MEASURING RADIATION FROM A PLURALITY OF LIGHT SOURCES
Leonard C. van der Gaag, and Luciano Pacheco, both of San Jose, Calif., assignors to Versatile Integrated Modules, Santa Clara, Calif.
Filed Feb. 20, 1976, Ser. No. 659,591
Int. Cl.² H01L *9/00;* **H05B** *33/00;* **G01N** *21/58*
U.S. Cl. 250—553 **19 Claims**

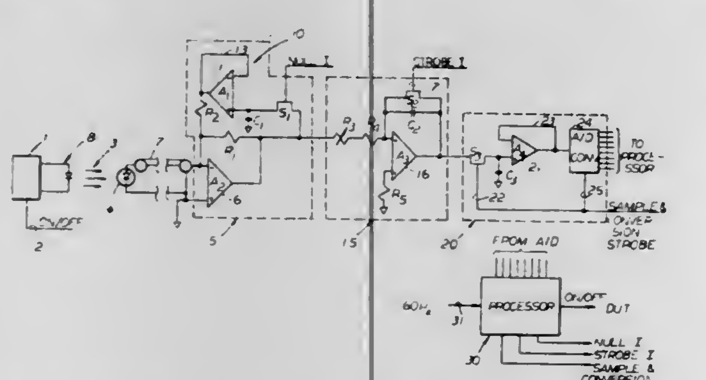

1. An apparatus for measuring the intensity of radiation from a source of radiation in the presence of ambient radiation having a periodic component comprising:
means for generating a first plurality of discrete signals, each of said signals having a magnitude protional to the intensity of said periodic component at a different predetermined time in a cycle of said component in the absence of radiation from said source and a second plurality of corresponding discrete signals, each of said second plurality of signals having a magnitude proportional to the combined intensity of said periodic component and radiation from said source at the same times in a subsequent cycle of said periodic component; and
means for processing said first and said second signals for indicating the intensity of said radiation from said source.

4,061,926
WIND DRIVEN ELECTRICAL GENERATOR
Paul V. Peed, 1053 North Ave., Sacramento, Calif. 95838
Filed Mar. 24, 1976, Ser. No. 669,961
Int. Cl.² F03D *9/00;* **H02P** *9/04*
U.S. Cl. 290—55 **2 Claims**

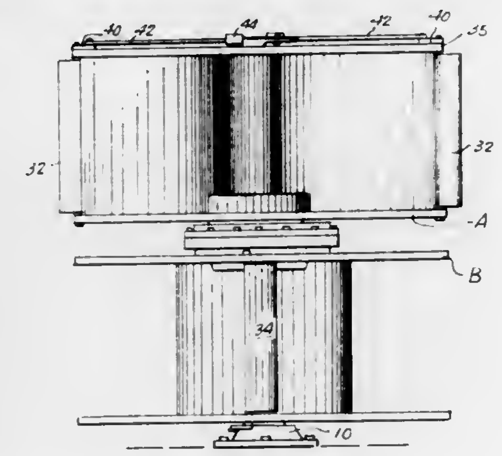

1. A wind driven electric generating device comprising a support, a first wind driven cylindrical cage type turbine for rotation in one direction mounted on said support, a first bearing race mounted on the bottom portion of said first turbine and a second wind driven cylindrical cage type turbine for rotation in the opposite direction mounted on said support coaxially below said first turbine, a second bearing race mounted on the top portion of said second turbine, one said wind driven turbine carrying the armature of an electric generator, the other said wind driven turbine carrying the stater of said electric generator, a disc disposed on said shaft between said two turbines, and ball bearings disposed between said first bearing race and said second race and caged in by said disc to provide synchronization of rotation of said two turbines.

4,061,927
TIMING SYSTEM FOR WATERING DEVICES
Gustav A. Link, 3710 Lomitas Drive, Los Angeles, Calif. 90032
Filed May 10, 1976, Ser. No. 684,762
Int. Cl.² H02J *3/14*
U.S. Cl. 307—41 **10 Claims**

1. A timing system for a plurality of electrically controlled watering devices comprising,
means for producing repetitive pulses,
a plurality of normally disabled frequency control devices for controlling said means to produce pulses of different frequencies,
means for manually preconditioning said control devices for selected frequencies,
means for initiating operation of said pulse producing means,
a divide-by-N counter for counting said pulses and effective to produce an output signal upon registering N pulses from said pulse producing means,
an electronic switching device having a plurality of outputs for connection to respective ones of said watering devices,
said switching device comprising means controlled by said output signals for applying energizing signals successively to different ones of said outputs whereby to energize respective ones of said watering devices; and

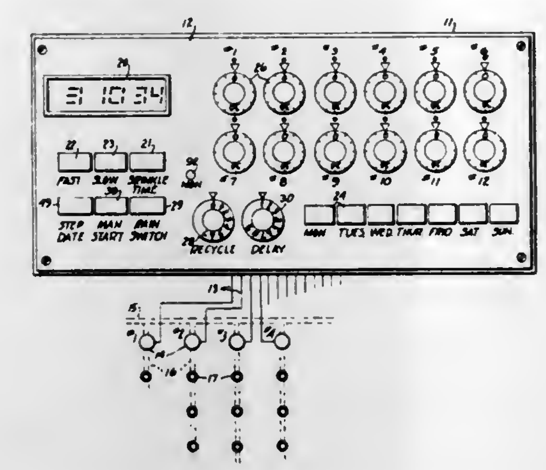

means responsive to said energizing signals for successively enabling different ones of said frequency control devices to control said pulse producing means.

4,061,928
CIRCUIT ARRANGEMENT FOR THE PROTECTION OF INPUTS OF INTEGRATED MOS CIRCUITS
Heinrich Hubert Kessler, Munich, Germany, assignor to Siemens Aktiengesellschaft, Berlin & Munich, Germany
Filed Aug. 25, 1976, Ser. No. 717,704
Claims priority, application Germany, Sept. 8, 1975, 2539890
Int. Cl.² H02H *9/04;* **H03K** *3/353*
U.S. Cl. 307—200 B **2 Claims**

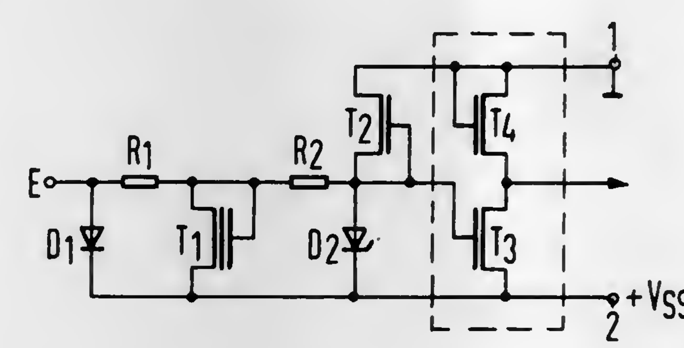

1. A protection circuit for protecting an input of an integrated MOS circuit against excessive voltages, the integrated MOS circuit connected across first and second supply terminals, comprising:
an input;
a pn bypass diode connected between said input and the first supply terminal;
a first MOS transistor including a source-drain path connected between the second supply terminal and an input of said MOS circuit and a gate connected to said input of said MOS circuit;
a gate controlled pn diode connected between said input of said MOS circuit and the first supply terminal;
a first resistor connected with a first terminal to said input of said MOS circuit;
a second MOS transistor including a source-drain path connected between a second terminal of said first resistor and said first supply terminal and a gate connected to said second terminal of said first resistor; and
a second resistor connected between said second terminal of said first resistor and said input.

4,061,929
CIRCUIT FOR OBTAINING DC VOLTAGE HIGHER THAN POWER SOURCE VOLTAGE
Kazuhiro Asano, Tokyo, Japan, assignor to Kabushiki Kaisha Daini Seikosha, Japan
Filed Sept. 21, 1976, Ser. No. 725,265
Claims priority, application Japan, Sept. 22, 1975, 50-114548; Sept. 23, 1975, 50-115210
Int. Cl.² H03K *1/14;* **G04C** *3/00*
U.S. Cl. 307—246 **7 Claims**

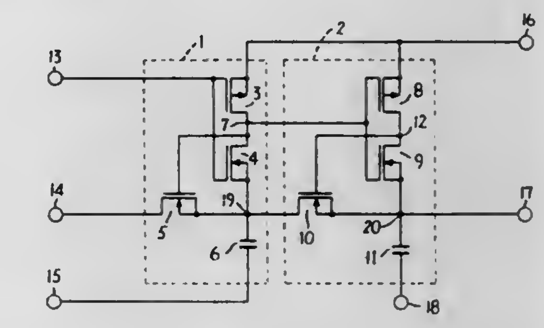

1. A voltage boosting circuit comprising a plurality of boosting units connected in series, each of said units comprising a condenser and an MOS-FET, said MOS-FET of a first unit being connected between one terminal of said condenser and one terminal of a power source so as to connect said terminal with said power source when said MOS-FET is conductive and said MOS-FET of a succeeding unit being connected between said terminal of said condenser of the preceeding unit and one terminal of said condenser of said succeeding unit so as to connect said terminals of said condenser when said MOS-FET is conductive, and means for switching said MOS-FET, said switching means of each said unit comprising a second MOS-FET having a source connected to the opposite terminal of said power source, a third MOS-FET having a source connected to the source of said first mentioned MOS-FET and to one terminal of said condenser, means connecting the drains of said second and third MOS-FETs to the gate of said first mentioned MOS-FET and means for applying a pulse signal to the gates of said second and third MOS-FETs.

4,061,930
BASE DRIVE INHIBIT CIRCUIT
Arne Nerem, San Diego, Calif., assignor to Rohr Industries, Incorporated, Chula Vista, Calif.
Filed June 11, 1976, Ser. No. 695,014
Int. Cl.² H03K *17/60*
U.S. Cl. 307—254 **4 Claims**

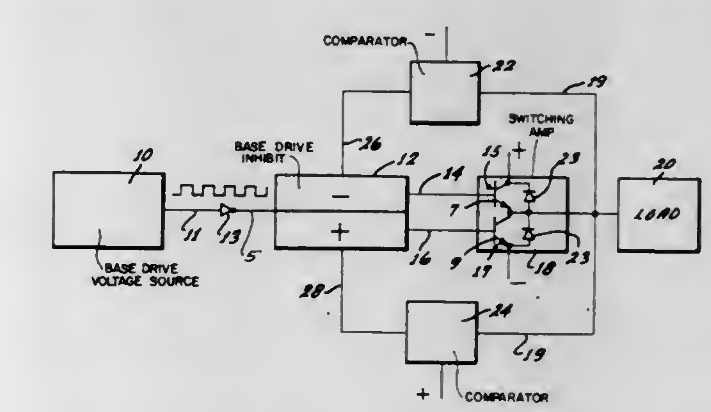

1. A base drive inhibit circuit for positive and negative phase transistors of a switching amplifier comprising:
a source of base drive voltage having alternate positive and negative states;
a first means for producing a first signal responsive to the conduction state of said positive phase transistor and a positive phase reference voltage level;
a second means for producing a second signal responsive to the conduction state of said negative phase transistors and a negative phase reference voltage level; and

a control means for selectively supplying said base drive voltage from said source to said positive phase transistor when said first signal indicates that said positive transistor is in a forward biased state with respect to said positive reference voltage level and said base drive voltage is in a positive state and to said negative phase transistor when said second signal indicates that said negative transistor is in a forward biased state with respect to said negative reference voltage level and said base drive voltage is in a negative state.

4,061,931
SWITCHING REGULATOR POWER SUPPLY MAIN SWITCHING TRANSISTOR TURN OFF SPEED UP CIRCUIT
Robert J. Boschert, Sunnyvale, Calif., assignor to Boschert Associates, Sunnyvale, Calif.
Filed Aug. 6, 1976, Ser. No. 712,222
Int. Cl.² H03K *17/00*
U.S. Cl. 307—300 **3 Claims**

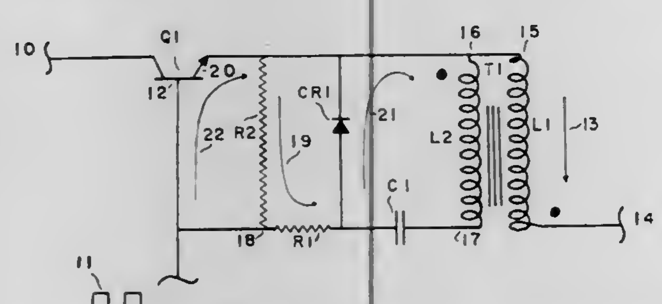

1. In a switching regulator power supply, a main switching transistor turnoff speedup circuit comprising:
a transformer having a primary and a secondary winding, said primary winding connected in series between the output electrode of the main switching transistor and the output terminal of the power supply, the first end of said secondary winding connected to said output electrode, said secondary winding being wound to produce signals at its second end that are oppositely phased from corresponding signals at said output terminal of said power supply;
signal feedback circuitry including a capacitor coupled in series between said second end of said secondary winding and the base of said switching transistor for applying said oppositely phased signals to said base; and
signal bypass means coupled across said secondary winding for suppressing forward bias enabling signals from the base of said transistor and for applying negative biased regenerative turnoff signals to said base.

4,061,932
WINDOW COMPARATOR
Robert Roger Cordell, Tinton Falls, N.J., assignor to Bell Telephone Laboratories, Incorporated, Murray Hill, N.J.
Filed Feb. 17, 1976, Ser. No. 658,744
Int. Cl.² H03K *5/153, 5/20*
U.S. Cl. 307—360 **15 Claims**

1. A window comparator comprising
an input circuit having a differential circuit with a current source for conducting I units of current and being responsive to a differential input signal for conducting two dependently variable currents through different output sides to an output circuit, the input circuit being arranged for rejecting common-mode input signals,
the output circuit having a pair of current source loads, each load arranged for conducting a fixed magnitude of current greater than I/2 units of current and connected to a different side of the output of the input circuit, the output circuit being responsive to either side of the input circuit conducting more than the predetermined magnitude of current,
a pair of voltage dropping elements connected to the current source in the input circuit for establishing two limits of the window comparator, and
the output circuit connected with the different sides of the input circuit and responsive to changes in the ratio between the two dependently variable currents conducted therethrough for indicating with a single uniform signal when the magnitude of the differential input signal exceeds one of the two limits.

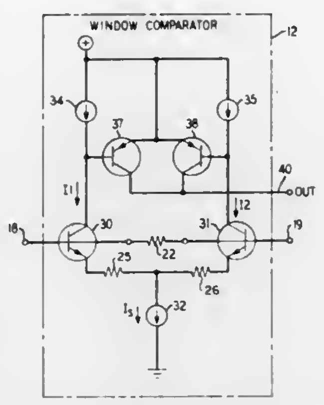

4,061,933
CLOCK GENERATOR AND DELAY STAGE
Paul R. Schroeder, Dallas, and Robert J. Proebsting, Richardson, both of Tex., assignors to Mostek Corporation, Carrollton, Tex.
Filed Dec. 29, 1975, Ser. No. 644,855
Int. Cl.² H03K *5/13, 1/12, 19/08*
U.S. Cl. 307—262 **27 Claims**

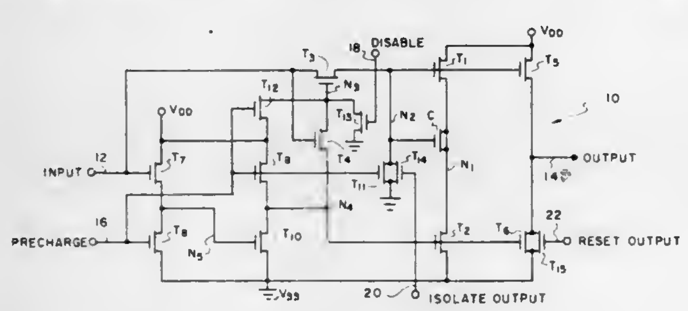

1. In an MOSFET integrated circuit, the delay stage comprising;
first and second transistors connected in series between a drain supply voltage and a source supply voltage and forming a first node therebetween,
the gate of the first transistor forming part of a second node,
capacitor means capacitively coupling the first node to the second node,
an input node,
a third transistor having a channel connecting the second node to the input node,
the gate of the third transistor forming part of a third node,
the gate of the second transistor forming part of a fourth node, and
precharge circuit means for precharging the third and fourth nodes to turn the third and second transistors, respectively, on, and for discharging the second node to turn the first transistor off, and
control circuit means for holding the voltage charge on the third node as the input node transitions from a voltage near the source supply voltage to a voltage nearer the drain supply voltage to allow the third node to be capacitively boosted and thus rapidly charge the second node substantially to the voltage at the input node and for automatically discharging the third and fourth nodes a short delay period after the rise of the voltage on the input node to turn the second and third transistors off whereby the rise in voltage on the first node will capacitively boost the voltage on the second node as a result of the capacitor means.

4,061,934
VIBRATION PICKUP UNIT FOR SENSING VIBRATIONS OF MUSICAL INSTRUMENTS AND THE LIKE
Horace N. Rowe, Swanton, Ohio, assignor to Rowe-DeArmond, Inc., Toledo, Ohio
Continuation of Ser. No. 503,964, Sept. 6, 1974, abandoned. This application Oct. 14, 1975, Ser. No. 622,404
Int. Cl.² H01L *41/04*
U.S. Cl. 310—323 **1 Claim**

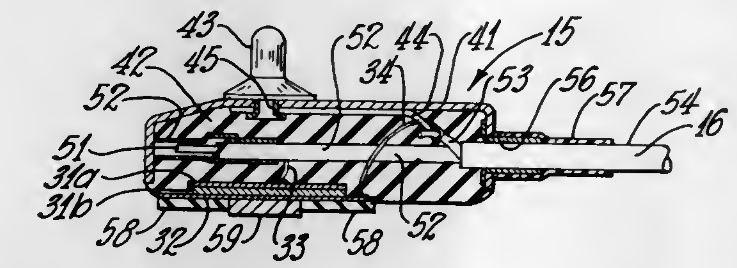

1. A pickup unit for translation of mechanical vibrations such as of musical instruments and the like into electrical signals of corresponding frequency comprising;
a casing for said pickup unit having at least one open wall,
a vibratable diaphragm,
a flex type piezoelectric element bonded to the surface of said diaphragm,
means resiliently supporting said diaphragm and piezoelectric element at the open wall of said casing with said piezoelectric element disposed on the interior casing side thereof,
a vibration transmitting means comprising a layer of cork secured to said diaphragm and securing means on each side of said vibration transmitting means comprising resilient foam material having an adhesive surface.

4,061,935
OVERLOAD PROTECTOR MOUNTING APPARATUS
Tara Kandpal, Tecumseh, Mich., assignor to Tecumseh Products Company (Compressor), Tecumseh, Mich.
Filed Jan. 5, 1976, Ser. No. 646,523
Int. Cl.² H02K *11/00*
U.S. Cl. 310—68 C **13 Claims**

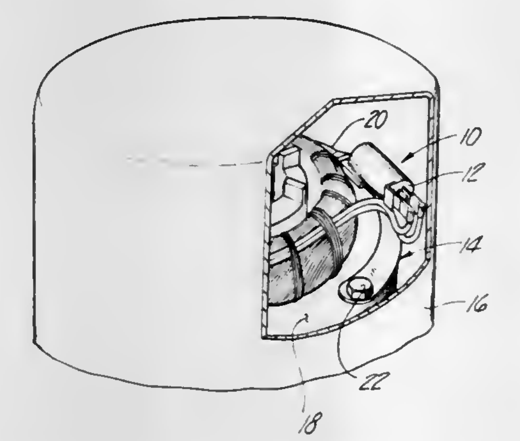

1. The combination comprising a compressor motor, a thermal overload protector adapted for electrical connection to said motor and means mounting said protector in thermal proximity to said motor, said means comprising a bracket mounted on a surface of said motor and including a raised platform spaced in assembly from said motor surface, said platform having a hole formed centrally therein, and a hollow protector holder having an opening to receive said protection means and a resilient outer wall, said holder further having a stud and a pair of spaced longitudinally extending ribs formed on said wall, said ribs having respective opposed longitudinally extending grooves formed therein, said holder being slidably received onto said platform with corresponding edges of said platform being received by resilient snap-fit into said hold, said holder being specifically contoured to internally receive and retain said protector.

4,061,936
SYNCHRONOUS MOTOR
Lee A. Woolley, Kokomo, Ind., assignor to The Scott & Fetzer Co., Kokomo, Ind.
Filed Apr. 26, 1976, Ser. No. 680,532
Int. Cl.² H02K *7/118*
U.S. Cl. 310—41 **5 Claims**

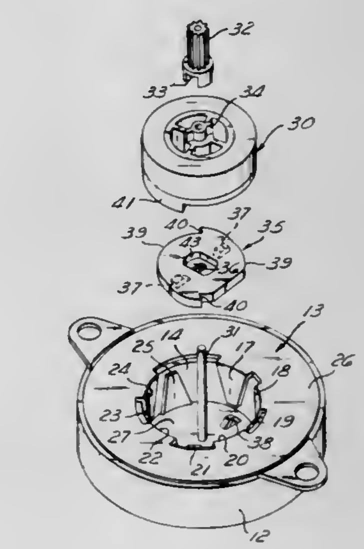

1. A synchronous motor comprising an annular stator having a cylindrical inner periphery, a cylindrical rotor mounted within and spaced from an inner cylindrical periphery of the stator, said rotor having a plurality of rotor poles spaced about its cylindrical periphery, said stator having a plurality of stator poles spaced about its inner periphery, one of said pluralities having axially tapered poles with one of said tapered poles being angularly and circumferentially offset from the remaining poles of said one of said pluralities, said remaining poles being equally spaced from each other about an arc which does not include the offset pole.

4,061,937
METHOD AND APPARATUS FOR FABRICATING VENT PLATE HAVING BOW-TIE SLOT ARRANGEMENT
Rajeshwar P. Goel, Monroeville; Terry L. Vota, Elizabeth, and Thomas J. Lynch, Pittsburgh, all of Pa., assignors to Westinghouse Electric Corporation, Pittsburgh, Pa.
Filed Feb. 25, 1976, Ser. No. 661,076
Int. Cl.² H02K *1/20*
U.S. Cl. 310—65 **3 Claims**

1. A plate for supporting a finger having a rivet portion, said plate comprising:
a punching having a plurality of openings for receiving the rivet portions, each of said openings being defined by a plurality of intersecting side portions symmetrically disposed about first and second lines of symmetry which are mutually perpendicular;
each of said openings being elongated with respect to the first line of symmetry;
the elongated side portions of said openings each comprising a pair of planar surfaces which intersect along the second line of symmetry;
each of said openings including first and second curved side portions disposed intermediate the elongated intersecting side portions, said curved side portions being concave with respect to the second line of symmetry;
the length of said openings as measured through the point of intersection of said lines of symmetry from the surface of the first concave side portion to the surface of the second

concave side portion being substantially equal to the length of the rivet portion, and the width of said openings

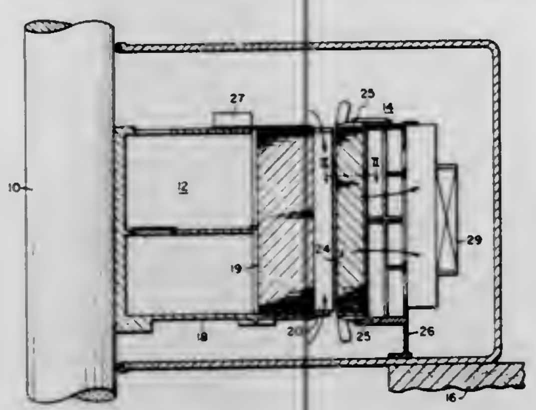

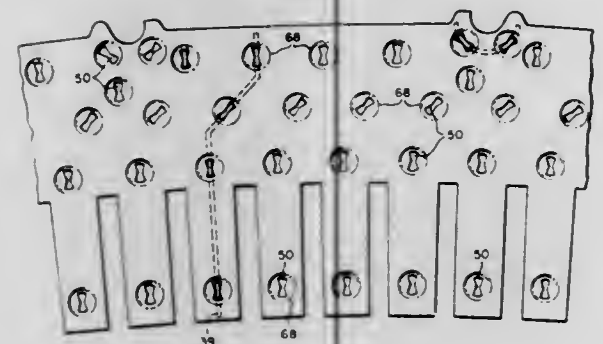

as measured along the second line of symmetry being substantially equal to the width of the rivet portion.

4,061,938
DEVICE FOR GENERATING ELECTRICAL PULSES IN RESPONSE TO SHAFT ROTATION
Kiyoshi Hashimoto, and Shigeki Kitamura, both of Kadoma, Japan, assignors to Matsushita Electric Industrial Co., Ltd., Osaka, Japan
Filed June 16, 1976, Ser. No. 696,853
Claims priority, application Japan, June 20, 1975, 50-76120; Aug. 11, 1975, 50-97288; Nov. 28, 1975, 50-143128
Int. Cl.[2] H02K *21/12*
U.S. Cl. 310—168 **27 Claims**

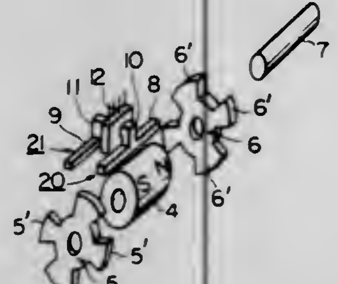

1. A device for generating electrical pulses each time a shaft turns a revolution, which device comprises:
a magnet having a longitudinal axis and axially magnetized, and secured to said shaft in such a manner as to be revolvable about the axis;
two yokes, each made of magnetic material and having a plurality of blades, said two yokes being fixedly attached to opposite axial ends of said magnet, respectively, and arranged such that each of the blades of one of said two yokes axially faces a space between two blades of the other yoke;
means for coupling an alternating magnetic field between said yokes in an axial direction with revolution of said magnet, which means is provided in the magnetic field between said yokes and includes two rod-like members, said two rod-like members being arranged in parallel to each other and positioned in parallel to said axis and in the vicinity of said yokes such that, when one of the two members faces one of the blades of one of said two yokes, the other member faces one of the blades of the other yoke; and
a magnetoelectric transducer magnetically coupled to said means in a manner as to be between the two rod-like members of said means for generating said electrical pulses due to said alternating magnetic field.

4,061,939
LOW NOISE SODIUM VAPOR LAMP FOR SONIC PULSE OPERATION
Jack M. Strok, Jr., Northfield, Ohio, assignor to General Electric Company, Schenectady, N.Y.
Filed Aug. 2, 1976, Ser. No. 710,486
Int. Cl.[2] H01J *61/068, 61/22, 61/36*
U.S. Cl. 313—25 **6 Claims**

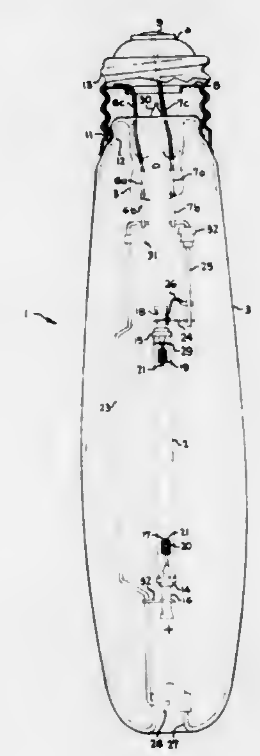

1. A jacketed high pressure sodium vapor lamp for operation at low noise levels on sonic pulses of short duty cycle comprising:
an elongated light-transmitting ceramic arc tube having conductive electrode-supporting closures sealed to opposite ends and containing an ionizable filling including sodium, said electrodes and closures comprising only non-magnetostrictive material,
an evacuated outer vitreous envelope surrounding said arc tube, said envelope having a vitreous stem at one end including a press through which extend a pair of inleads, all portions of said inleads including an intermediate portion sealed through the press, an inner portion passing into the outer envelope, and an outer portion being of non-magnetostrictive metal,
a metal wire frame within said envelope for supporting and making electrical connections to said arc tube, said frame comprising a long side rod extending from the inner portion of one inlead to the other end of said envelope, and a short rod extending from the inner portion of the other inlead, both said rods being of non-magnetostrictive metal,
and attachments between said arc tube closures and said rods.

4,061,940
BASELESS CARTRIDGE LAMP AND SOCKET THEREFOR
James J. Fitzgerald, Kinnelon; Joseph J. Fortunato, Livingston, and Nickolas P. Demas, Cranford, all of N.J., assignors to Wagner Electric Corporation, Parsippany, N.J.
Filed Mar. 31, 1976, Ser. No. 672,266
Int. Cl.[2] H01J *5/48, 5/50*
U.S. Cl. 313—318 **7 Claims**

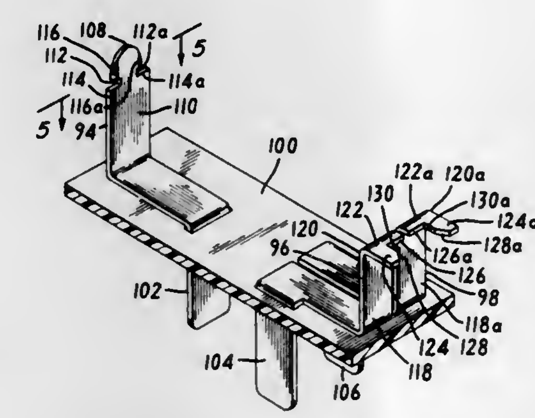

1. An electric lamp and cooperating socket therefor comprising:
a. at least three conductive support members sealably embedded in a lamp envelope;
b. each of said support members having an inside part and an outside part;
c. said inside parts of said support members being connected to at least two electrical components;
d. mounting means formed in said outside parts;
e. socket means having at least three means for cooperative supporting and power supplying engagement with said at least three outside parts; each of said at least three means for cooperative supporting and power supplying engagement being electrically insulated from at least two others; and
f. said mounting means containing installation limiting means cooperating with the supporting means on said socket to require installation on said socket means in a single rotational orientation.

4,061,941
CRT ELECTRON GUN ASSEMBLY
Joseph L. Hallett, Seneca Falls, and Donald L. Say, Waterloo, both of N.Y., assignors to GTE Sylvania Incorporated, Stamford, Conn.
Filed June 24, 1976, Ser. No. 699,440
Int. Cl.[2] H01J *29/50, 31/20*
U.S. Cl. 313—414 **1 Claim**

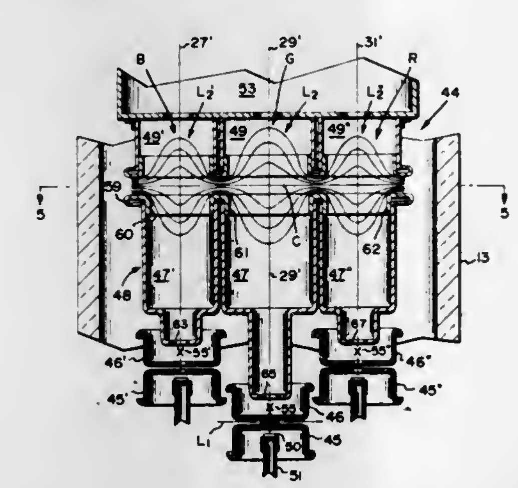

1. An improvement in a plural beam bi-potential in-line electron gun assembly embodying a center and two-side-related guns, said assembly including electron generating means formed to emit a plurality of separately controlled electron beams of substantially differing current levels when used in a color cathode ray tube having a forwardly oriented electron-responsive screen, each of said guns being formed of an arrangement of a plurality of related electrode members positioned in a spaced sequential manner forward of a rear-oriented cathode member to conjunctively effect control, initial acceleration, focusing and final acceleration of each beam, said improvement being structural dimensional differentiations in said gun assembly comprising:
constructional differentiation of at least the center gun structure of said assembly wherein the beam current level associated therewith is greater than that of said side-related guns, the focusing electrode member of said center gun having a greater length and an output portion of a larger diameter than the comparable dimensions of said side-related guns in conjunction with a sequentially adjacent acceleration electrode having a substantially like aperture diameter to provide for the formation of a final focusing lens of increased diameter and reduced spherical aberration oriented interspatially between the respective focusing and final acceleration electrode members of said center gun, said structural differentiation providing operational improvement in the focusing of the high current center beam to a spot size at the screen substantially equalling the spot sizes of the associated beams emanating from the side-related guns of said assembly.

4,061,942
IN LINE GUN SUPPORT ARRANGEMENT WITH EXPANSION COMPENSATION
Wolfram Andre, Aichwald, Germany, assignor to International Standard Electric Corporation, New York, N.Y.
Filed Dec. 9, 1976, Ser. No. 748,786
Claims priority, application Germany, Dec. 17, 1975, 2556862
Int. Cl.[2] H01J *29/02, 29/50*
U.S. Cl. 313—417 **1 Claim**

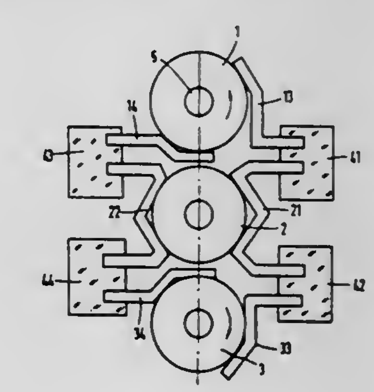

1. An electron gun for a multibeam electron tube which generates three electron beams in one line, the center focused beam thereof extending in the longitudinal axis of said tube, comprising:
four glass rods arranged around said longitudinal axis of said tube;
three modulator electrodes;
suspension elements connected to said four glass rods on one end portion thereof and contacting said electrodes on the other end, said center electrode for said center electron beam being held in position by two of said suspension elements each of which is affixed to two of said glass rods, said four glass rods being arranged in pairs on opposite sides of said modulator electrodes;
means for connecting two suspension elements for each of said modulator electrodes for the outer beams each pair of suspension elements for each outer beam electrode having ends connected to glass rods on opposite sides of each said electrode, and opposite ends contacting opposite sides of each said electrode substantially tangentially whereby the forces caused by the longitudinal expansion caused by heating up of said electron gun substantially engage said outer modulator electrodes tangentially, and in the same

sense of rotation, to cause rotation of said outer electrodes around said axis of each associated beam.

4,061,943
CATHODE RAY TUBE WITH SUPPORTED CONDUCTOR EXTENDING THROUGH EXHAUST TUBULATION
Mario A. DiDominico, and Harry E. Smithgall, both of Seneca Falls, N.Y., assignors to GTE Sylvania Incorporated, Stamford, Conn.
Filed Aug. 16, 1976, Ser. No. 715,177
Int. Cl.² H01J *29/02, 5/46*
U.S. Cl. 313—482 **2 Claims**

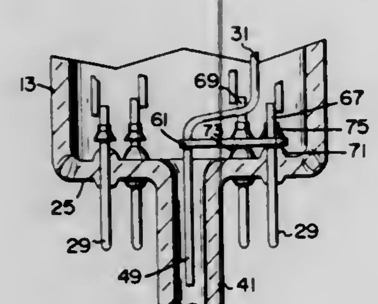

1. An improvement in a cathode ray tube embodying a screen supporting envelopic enclosure wherein a multi-element electron gun assembly is electrically connected with and supported upon a circular array of metallic pins traversing a glass closure portion of said envelope having an axially located hermetically sealed exhaust tubulation therein, said improvement comprising:

a separate electrical conductive means having a proximal section attached to one of said elements, the proximal section of said conductor being spatially positioned to extend to said closure portion whereat a distal section of said conductor is extended into said tubulation, said conductor being significantly smaller in cross section than the diameter of said tubulation and integrated into the hermetic seal thereof in a manner to traverse said seal thereby providing an axially oriented external electrical connection for said device; and

an apertured insulative member positioned within said tube above the glass closure portion thereof, said insulative member having at least three apertures therein, two of said apertures being of a size and orientation to accommodate the placement of said member on two of said pins in said circular array, a third aperture being spaced therefrom to effect positive and insulative positioning of said conductor in said tubulation.

4,061,944
ELECTRON BEAM WINDOW STRUCTURE FOR BROAD AREA ELECTRON BEAM GENERATORS
Gardiner Gay, Cambridge, Mass., assignor to Avco Everett Research Laboratory, Inc., Everett, Mass.
Filed June 25, 1975, Ser. No. 590,030
Int. Cl.² H01J *33/00*
U.S. Cl. 313—420 **6 Claims**

1. In an electron acceleration device for delivering to a region outside of the device an electron beam of substantial cross-section comprising a housing having an aperture, electron emission means within said housing and spaced from said aperture, an electron window adapted to be disposed within said aperture and defining with said housing an essentially gas-tight emission chamber, said electron window providing an exit from said housing through which said electron beam is transmitted when said housing is evacuated, said electron emission means actuated and an acceleration potential defining an electric acceleration field provided for accelerating electrons toward said electron window, the improvement which comprises:

a flat electrically conductive metal electron window support adapted to be sealably mounted in said housing aperture, said support having a high thermal conductance, a first surface for sealably receiving said electron window and a second surface facing said electron emission means;

said support having a plurality of elongated slots of a length and number to define the cross-section of said beam, said slots each being spaced apart a distance to define thin thermally conducting metal cross members each having an exposed end portion in contact with and supporting said window;

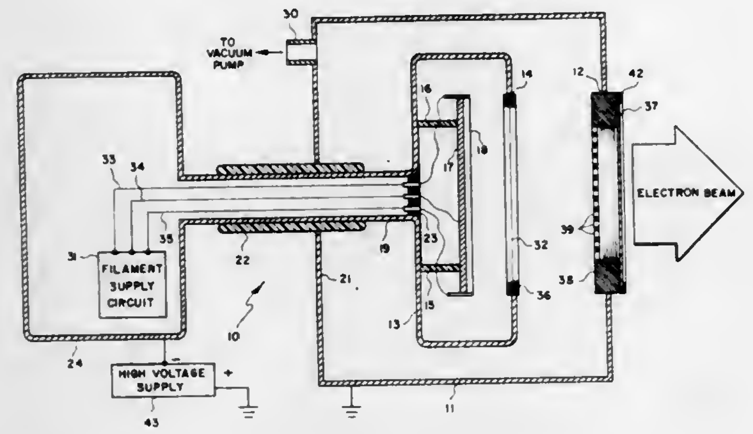

thermally and electrically conductive metal portions defining the bottom of each slot and comprising in part said second surface, each said metal portion having a plurality of closely spaced holes extending along the length of said slots and providing communication between the interior of said housing and said slots, said holes being of a size and spaced one from another to prevent the electric acceleration field from extending into said slots a substantial portion of the depth of said slots; and

conduit means positioned in relation to said cross members through which fluid coolant can be passed in heat-exchange relationship with said cross members.

4,061,945
SHIELDED GETTER SUPPORT ON ROTOR-SUPPORTED ANTENNA
David Benda, Geneva, and Charles A. Davis, Auburn, both of N.Y., assignors to GTE Sylvania Incorporated, Stamford, Conn.
Filed Dec. 3, 1976, Ser. No. 747,363
Int. Cl.² H01J *29/94;* **H01K** *1/52*
U.S. Cl. 313—481 **5 Claims**

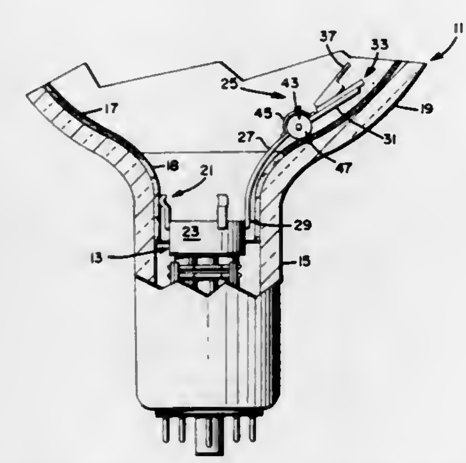

1. In a cathode ray tube having an envelope formed of an integration of neck, funnel and panel portions wherein an electron gun assembly is positioned within the neck portion in a manner to beam electrons to impinge a cathodoluminescent screen disposed on the panel portion thereof, improved means for supporting a container of effusive material within substantially the funnel portion of the envelope comprising:

an antenna-type longitudinal positioning member having first and second ends, said first end being attached to said electron gun assembly with the second end thereof having said container located thereat;

rod-like axle means attached to said longitudinal positioning member in a substantially transverse manner and substantially normal thereto at a region removed rearward from said second end thereof;

a rotatable member positioned in a freely turning manner on said axle means, said axle and rotatable member being fully oriented at a location rearward of the forward edge of said container; and

protective means associated with said rotatable member and formed as a fender-like shielding component to inhibit the deposition of effusive material on said rotatable member and to prevent any accumulated electric charge on said member from deleteriously influencing the scan pattern of the tube.

4,061,946
FLUORESCENT LAMP HAVING ZERO BACK BRIGHTNESS
Willy P. Schreurs, Danvers, Mass., assignor to GTE Sylvania Incorporated, Danvers, Mass.
Filed Oct. 6, 1975, Ser. No. 619,721
Int. Cl.² H01J *1/62*
U.S. Cl. 313—488 **4 Claims**

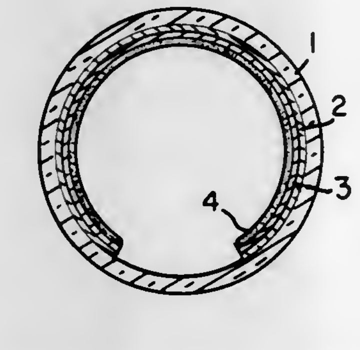

1. In a directional fluorescent lamp of the type comprising a tubular glass envelope having a reflector coating sandwiched between a phosphor layer and the glass envelope, the improvement which comprises a dark, nonreflecting, electrically nonconducting light-absorbing layer between the reflector coating and the glass envelope.

4,061,947
SPEED CONTROL SYSTEM FOR CONTINUOUS STRIP MANUFACTURING APPARATUS
Ralph A. Vogel, Three Rivers, Mich., assignor to Essex Group, Inc., Fort Wayne, Ind.
Filed Aug. 4, 1976, Ser. No. 711,754
Int. Cl.² H02P *5/46, 5/00*
U.S. Cl. 318—77 **4 Claims**

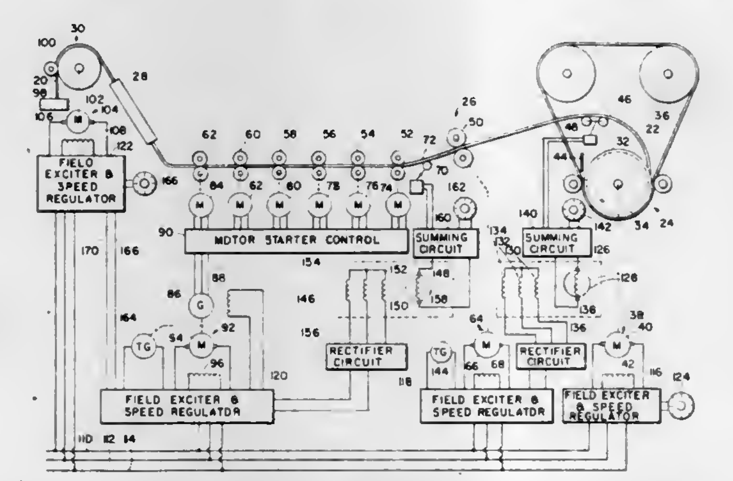

1. In a continuous strip manufacturing apparatus having first and second spaced rotary work means between which elongate material passes in the form of a loop, a first electric motor for driving said first work means, a variable-speed second electric motor for driving said second work means, manually operable control means for producing a first signal voltage proportional to a desired speed ratio of said second work means to said first work means, looper means for sensing the position of said loop of elongate material and producing a second signal voltage corresponding to the variation in position of said loop of elongate material from a preselected position, and regulator means having input means and output means controlling the speed of said second motor to vary the speed of said second motor in direct proportion to changes in a control voltage applied to said input means; the improvement comprising: summing means for producing a third signal voltage directly proportional to the sum of said first and second signal voltages, function generator means for adjusting the magnitude of said third signal voltage by a factor substantially linearly proportional to the rotational speed of said first work means to provide a fourth signal voltage, and circuit means for applying said fourth signal voltage as a control voltage to said input means of said regulator means to cause the speed of said second motor to vary substantially linearly with changes in the speed of said first work means and to further cause compensating variations in the speed of said second motor to maintain the position of said loop of elongate material within acceptable limits.

4,061,948
APPARATUS FOR RE-TRANSFERRING POWER FROM MECHANICALLY DRIVEN AND/OR ELECTRICALLY BRAKED MOTORS OF SPINNING MACHINES
Hansruedi Lamparter, Winterthur, Switzerland, assignor to Rieter Machine Works, Ltd., Winterthur, Switzerland
Filed May 12, 1975, Ser. No. 576,876
Claims priority, application Switzerland, May 20, 1974, 6874/74
Int. Cl.² H02P *7/70*
U.S. Cl. 318—87 **10 Claims**

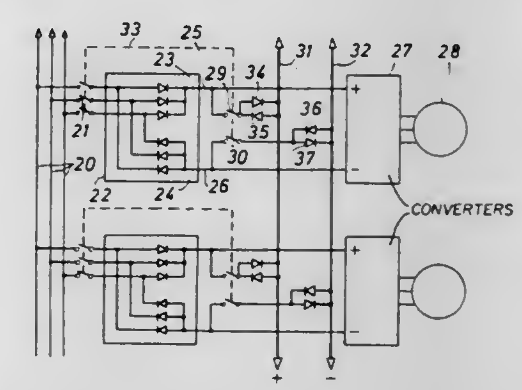

1. In combination,

a plurality of motors for a spinning machines,

an AC power supply line for supplying power to said motors,

a plurality of electrical circuits, each said circuit connecting at least one of said motors to said AC power supply line and including a rectifier connected to said power supply line, an intermediate DC circuit, and means for converting DC to AC, and

an apparatus for re-transferring power from at least one of said motors to another of said motors in response to mechanical driving and/or electrical braking of said one motor, said apparatus including a power equalizing circuit, and bi-directional coupling devices electrically connecting each intermediate DC circuit loosely to said power equalizing circuit.

4,061,949
EARTH EXCAVATOR INCLUDING APPARATUS FOR STABILIZING PERFORMANCE BY COMPENSATING FOR CHANGES IN TEMPERATURE
Daniel L. Griffis, Erie, Pa., assignor to General Electric Company, Schenectady, N.Y.
Filed Nov. 17, 1975, Ser. No. 632,556
Int. Cl.² H02P *5/26*
U.S. Cl. 318—154 **8 Claims**

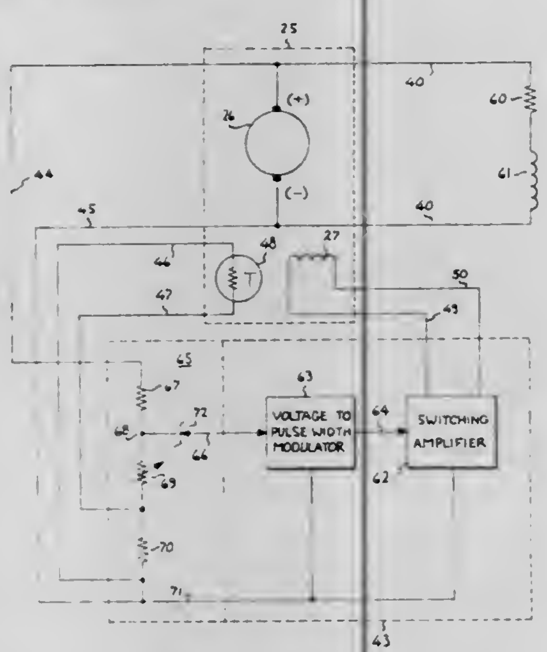

1. In an earth excavator of the type whose performance is subject to undesirable variations as a result of wide variations in temperature under which the excavator may be operated, the excavator including a movable earth excavating component and a direct current electric motor for providing motive power for the component, the electric motor having a field winding, the electrical resistance of the motor field winding being a direct function of the temperature of the motor field winding, thereby causing the performance of the motor and thus of the excavator to vary with variations in the current flowing through the motor field winding, and the excavator further including an exciting generator for supplying voltage and current to the motor field winding;

the improvement wherein said excavator further includes apparatus for stabilizing performance of the excavator by compensating for variations in temperature, said apparatus comprising:

a. means for sensing output voltage of the direct current exciting generator and for providing a first signal representative thereof;
b. means for sensing a temperature representative of the temperature of the motor field winding and for providing a second signal representative thereof; and
c. a temperature compensating voltage regulator comprising:
 i. first input means for receiving the first representative signal;
 ii. second input means for receiving the second representative signal;
 iii. means for combining the first and second signals to produce a third signal as an inverse function of the first signal and a direct function of the second signal; and
 iv. output means for supplying excitation current to a field winding of the exciting generator in response to the third signal;

whereby the magnitude of regulated voltage supplied by the exciting generator to the motor field winding is directly related to the temperature of the motor field winding, thereby maintaining current supplied to the motor field winding and therefore the performance of the excavator substantially constant despite variations in the temperature of the said motor field winding.

4,061,950
PULSE GENERATING DEVICE FOR REGULATING THE ROTATIONAL SPEED OF A BODY
Kanji Kayanuma, Yokohama, Japan, assignor to Victor Company of Japan, Limited, Japan
Filed Aug. 12, 1975, Ser. No. 603,852
Claims priority, application Japan, Aug. 13, 1974, 49-91953; Aug. 13, 1974, 49-91954; Aug. 13, 1974, 49-91955
Int. Cl.² H02P *5/00*
U.S. Cl. 318—314 **11 Claims**

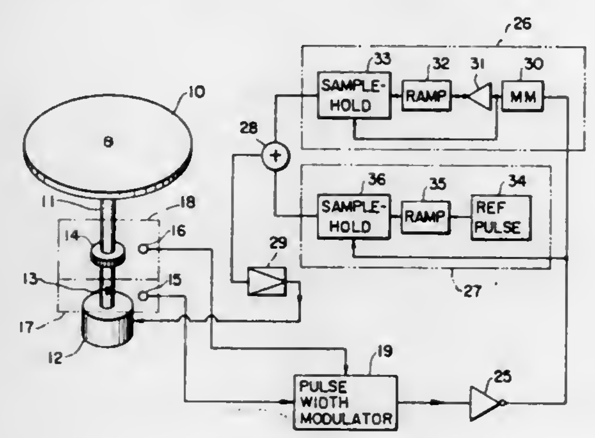

6. In an apparatus for regulating the speed and phase of a rotating body, including means for driving said body, a first pulse generating mechanism generating a pulse for each rotation of said body, a second pulse generating mechanism generating a predetermined number of pulses for each said rotation with a constant time relation to the pulse from said first generating mechanism, said pulses from the second generating mechanism being unequally spaced apart from each other, a first utilization circuit receptive of a series of pulses with equally spaced-apart trailing edges for generating a speed control signal, a second utilization circuit including a source of a reference phase and receptive of said series of pulses for generating a phase control signal, and a summing circuit for combining said speed and phase control signals, said combined signals being coupled to said drive means to control the speed of rotation of said body at a constant value and the phase of said body at a constant relation with respect to said reference phase, the combination comprising, a shift register having a row of storage elements equal in number to the pulses from said second generating mechanism produced for each said rotation and receptive of the pulse from said first generating mechanism as a binary digit to be shifted through said storage elements and further receptive of the pulses from said second generating mechanism as a clock signal to shift said binary digit, and a plurality of monostable multivibrators each being receptive of the output from each said storage element and having manually adjustable time constant values to permit correction of the duration of the pulses from said second generating mechanism to provide a series of pulses with equally spaced-apart trailing edges at a given speed of rotation to serve as inputs to said first and second utilization circuits.

4,061,951
TIMING CIRCUIT FOR INCREMENTAL ACTUATORS
Alfred William Barber, 50-16 232nd St., Bayside, N.Y. 11364
Filed Oct. 20, 1975, Ser. No. 623,821
Int. Cl.² H02P *5/10*
U.S. Cl. 318—443 **1 Claim**

1. In an interval timing circuit, the combination of;
a DC motor including an output shaft coupled to a utilization means;
a pair of transistors comprising a first transistor and a second transistor connected as a Darlington pair;
a battery for operating said circuit including said motor;
a series circuit consisting of said battery, the input to said motor and the collector to emitter path of the output transistor of said Darlington pair;
two resistors connected with one each of their terminals

connected to one pole of said battery and the other terminals of each resistor connected to opposite ends of a capacitor;
a single pole single throw switch coupled to the shaft of said motor and adapted to close once for each revolution of said shaft;

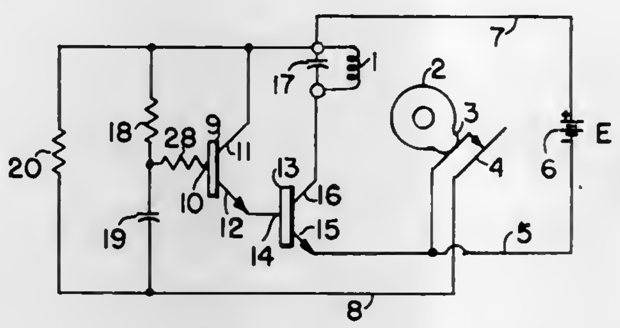

means connecting said switch between one end of said capacitor and the emitter of said second transistor of said Darlington pair;
and means connecting the other end of said capacitor to the base of the first transistor of said Darlington pair.

4,061,952
COMPUTER-CONTROLLED MACHINE TOOL
Jack Dinsdale, Olney; David Wallace McQue, Milton Keynes, and Geoffrey Vorley, Sheppey, all of England, assignors to Cranfield Institute of Technology, England
Filed Apr. 14, 1975, Ser. No. 568,056
Int. Cl.² G05B *19/24*
U.S. Cl. 318—572 **12 Claims**

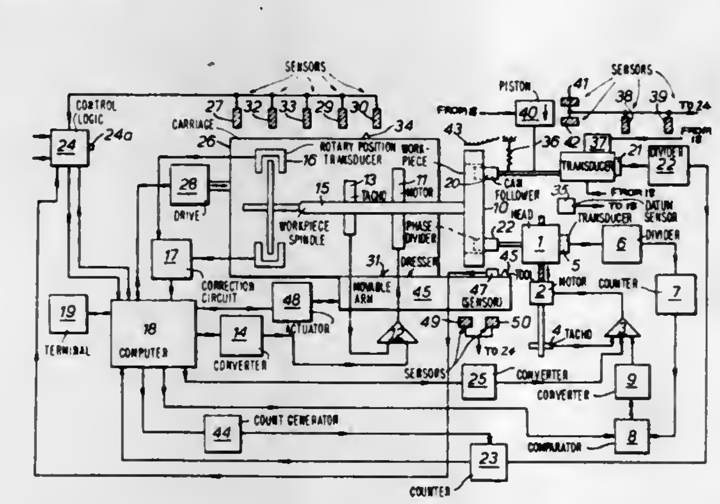

1. A control system for controlling the position of a rotating tool acting on a workpiece to form a non-circular profile on the workpiece, the system comprising: first motor means for adjusting the position of the tool; first position sensor means for providing a first digital signal representing the actual position of the tool; a second positive sensor means for providing a third digital signal indicative of the actual angular position of the workpiece; third position sensor means for providing a fourth digital signal representative of the position of a follower engaging the machined surface of the workpiece at a position angularly spaced from the tool in relation to the axis of angular movement of the workpiece; and digital computer means having a memory for information defining a desired non-circular profile for the workpiece, the second and third position sensor means being coupled to feed the computer means which is programmed to produce a second digital signal, indicative of a desired position for the tool, in dependence upon a selected portion of said stored information, which portion is selected by use of the third signal to compensate for tool wear; and comparator means responsive to any difference between the values represented by the first digital signal and the second digital signal indicative of a desired position for the tool for controlling the first motor means so as to reduce the difference.

4,061,953
NUMERICAL CONTROL SYSTEM
Mitsuo Matsumoto, Kokubunji, Japan, assignor to Tokyo Shibaura Electric Co., Ltd., Kawasaki, Japan
Filed June 3, 1976, Ser. No. 692,347
Int. Cl.² G05B *19/24*
U.S. Cl. 318—573 **11 Claims**

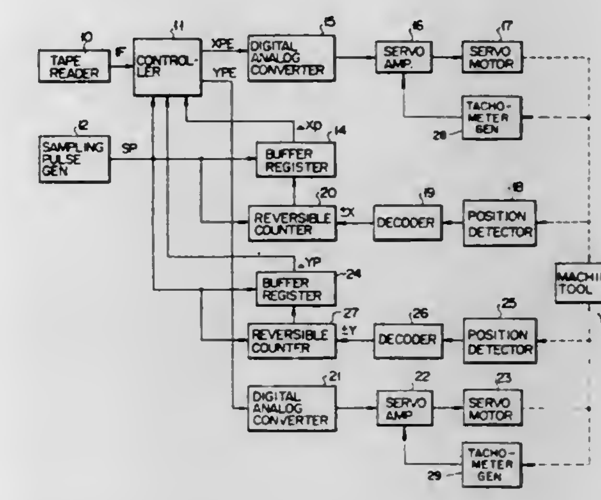

1. A numerical control system comprising a plurality of axially movable sections; a numerical data source for instructing a predetermined movement path of the movable section; a sampling pulse generator for generating a sampling pulse for every predetermined time period; position detecting means for detecting the amount and direction of movement of the movable section for the predetermined time period to generate a position data; a controller adapted to calculate an instruction position increment value of the movable section to be moved for the predetermined time period based on said numerical data and said sampling pulse from said sampling pulse generator, a position error memory section in the controller in which each calculated increment value is cumulatively added and each output from said position means is cumulatively subtracted; converter means for converting the numerical data from said position error memory section to an analog data; amplifier means for amplifying said analog data from said converter means; and a servo motor driven according to the output of said amplifier means.

4,061,954
DYNAMIC RANDOM ACCESS MEMORY SYSTEM
Robert J. Proebsting, Richardson, and Paul R. Schroeder, Dallas, both of Tex., assignors to Mostek Corporation, Carrollton, Tex.
Division of Ser. No. 644,857, Dec. 29, 1975. This application Nov. 8, 1976, Ser. No. 741,720
Int. Cl.² G11C *11/24*
U.S. Cl. 320—1 **1 Claim**

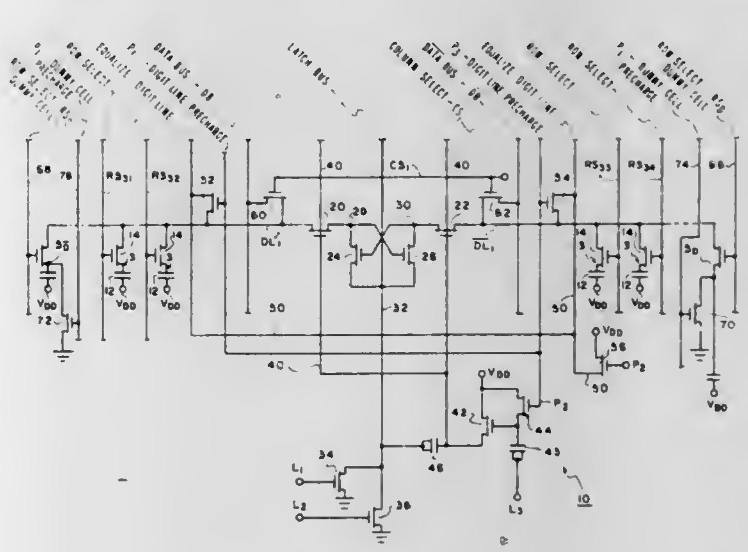

1. The method for producing binary logic levels on true and

complement output nodes having relatively large capacitance values which comprises:
- establishing a voltage level on both the true and complement output nodes near the higher logic level, the difference in voltage levels on the output nodes representing an input signal, and transferring the voltage levels through first and second impedances to true and complement input nodes, respectively, having relatively small capacitance values;
- then discharging the true input node through a first transistor the conductance of which is controlled by the voltage on the complement input node and the true output node through the first impedance to the true input node, or in the alternative discharging the complement input node through a second transistor the conductance of which is controlled by the voltage on the true input node and the complement output node through the second impedance to the complement input node, the node being discharged being that node that had the lower initial voltage value.

4,061,955
MULTI-CELL BATTERY PROTECTION SYSTEM
Ralph D. Thomas, Cleveland, and Nagle, William J., Avon Lake, both of Ohio, assignors to The United States of America as represented by the Administrator of the National Aeronautics and Space Administration, Washington, D.C.
Filed May 19, 1976, Ser. No. 687,822
Int. Cl. H02J *7/04*
U.S. Cl. 320—6 **8 Claims**

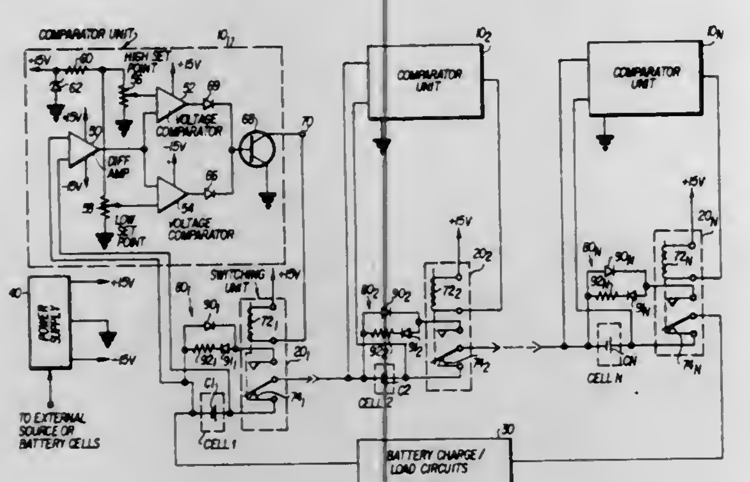

1. A protection system for a battery having a plurality of cells, said system comprising:
- a plurality of protective circuits equal in number to the number of said cells, each said circuit being associated with an individual cell and each said circuit comprising solid state comparator means, connected across the corresponding cell, for continuously sensing and comparing the cell voltage with a predetermined upper voltage level and a predetermined lower voltage and for generating an output signal when said cell voltage is above said upper level or below said lowcr level, a normally open bypass circuit for bypassing said cell, control means responsive to said output signal for completing said bypass circuit to cause bypassing of said cell when the cell voltage is above said upper level or below said lower level, said bypass circuit comprising oppositely poled diodes connected in parallel and a resistor connected in series with one of said diodes.

4,061,956
ELECTRONIC DC BATTERY CHARGER
Lowell K. Brown, Midvale; William Albert Newman, and William A. Boyd, both of Salt Lake City, all of Utah, assignors to Utah Research and Development Company, Salt Lake City, Utah
Continuation-in-part of Ser. No. 629,285, Nov. 6, 1975, Pat. No. 4,016,473. This application Aug. 23, 1976, Ser. No. 716,524
Int. Cl.[2] H02J *7/04*
U.S. Cl. 320—22 **31 Claims**

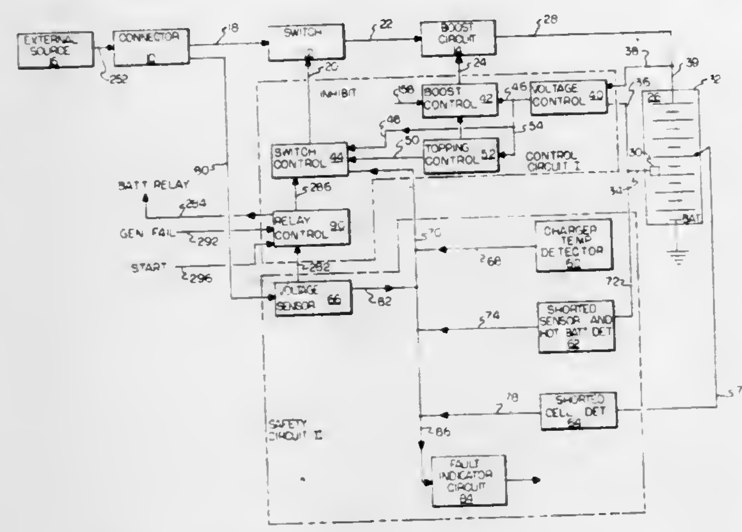

1. A battery charger comprising:
- power connector means for removable conductive connection to an external source of direct current power;
- switch means conductively connected to said power connector means to receive power therefrom;
- a boost circuit conductively connected to said switch means to receive power therefrom and removably conductively connected to a battery to be charged to supply power thereto;
- temperature sensing means positioned to sense the temperature of said battery and generate a temperature reflective signal;
- a control circuit (1) conductively connected to said battery to receive a battery voltage signal therefrom, (2) conductively connected to said switch means to supply a switching signal thereto, (3) conductively connected to said boost circuit to supply a boosting signal thereto, and (4) conductively connected to said temperature sensing means to receive said temperature reflective signal, said control circuit (1) receiving said battery voltage signal and said temperature reflective signal to determine the temperature adjusted stage of charge of said battery, (2) supplying said switching signal to cause said switch means to supply power to said boost circuit in accordance with a preselected charging program related to said battery's state of charge, and (3) supplying said boosting signal to said boost circuit to cause said boost circuit to supply charging current signals to said battery which vary in magnitude and form in accordance with said preselected charging program related to said state of charge of said battery.

4,061,957
ELECTRIC ENERGY CONVERSION APPARATUS
Reinout Jan Vader, Verl. Frederikstraat 19, Groningen, Netherlands
Filed Feb. 4, 1976, Ser. No. 655,083
Int. Cl.[2] H02M *3/335*
U.S. Cl. 363—22 **41 Claims**

1. An electrical energy conversion apparatus comprising:
at least one converter comprising:
- a transformer having a saturable core on which are wound a plurality of input windings including a tapped main input winding, and an output winding;

- a high-power first transistor configuration connected to one end of said tapped main input winding of said transformer, said first transistor configuration having a control electrode; and
- a low-power second transistor configuration connected to the other end of said main input winding and having a control electrode;
- a rectifying circuit connected to said output winding, said rectifying circuit being in the current-conducting state only when said first transistor configuration is in the conducting state; and
- a circuit connected to said control electrodes of said first and second transistor configurations for controlling the switching actions thereof;

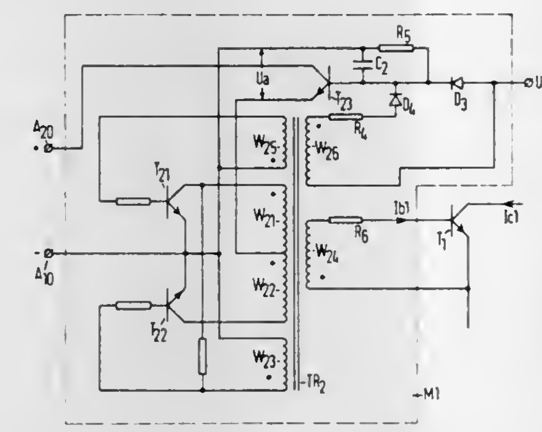

whereby when a voltage is supplied to said energy conversion apparatus, said first and second transistors are alternately switched into the conducting state and said transformer core is magnetized in alternating directions, said control circuit being operative to switch said first transistor configuration out of the conducting state before said transformer core is driven into saturation during each cycle, said first transistor configuration being switched into the conducting state when said second transistor configuration is switched into the non-conducting state, said second transistor configuration being switched into its non-conducting state when said transformer core reaches saturation while said second transistor configuration is in the conducting state.

4,061,958
CONSTANT POWER RATING POWER SUPPLY
William T. Walker, Summit, N.J., assignor to Hewlett-Packard Co., Palo Alto, Calif.
Filed Apr. 14, 1976, Ser. No. 676,849
Int. Cl.[2] H02M *7/00*
U.S. Cl. 363—81 **20 Claims**

1. Apparatus for providing selected levels of direct current voltage from a source of alternating current voltage comprising in combination a transformer having primary and secondary windings, a plurality of pairs of unilateral current conducting devices, the devices of each pair being connected in series with like polarity, means connecting said series pairs in parallel with like polarity, a direct current connection between a first intermediate tap on said secondary winding and a junction of a first of said pairs of said devices, a direct current connection between a econd intermediate tap on said secondary winding and the junction between a second pair of said devices, a first switch connected between a first point on said secondary winding that is on one side of said intermediate taps and the junction between a third pair of said devices, and a second switch connected between a second point on said sec-

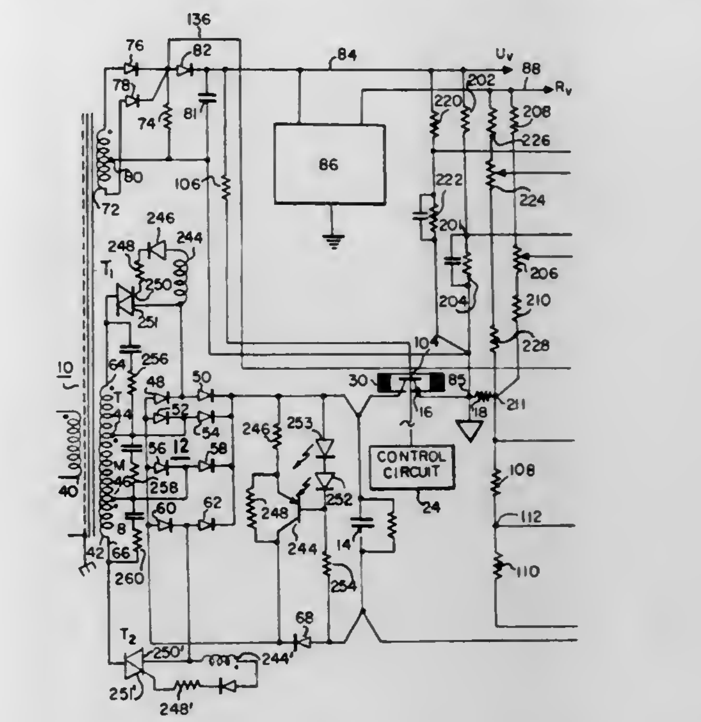

ondary winding that is on the other side of said intermediate taps and the junction between a fourth pair of said devices.

4,061,959
VOLTAGE STANDARD BASED ON SEMICONDUCTOR JUNCTION OFFSET POTENTIALS
Adel Abdel Aziz Ahmed, Annandale, N.J., assignor to RCA Corporation, New York, N.Y.
Filed Oct. 5, 1976, Ser. No. 729,767
Int. Cl.[2] G05F *1/58*
U.S. Cl. 323—1 **6 Claims**

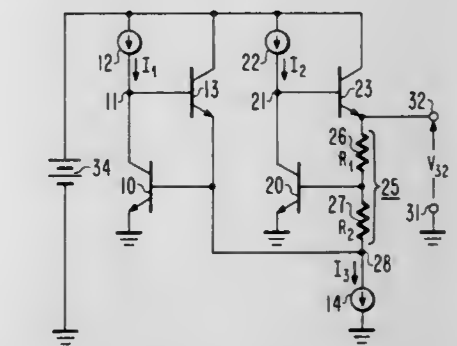

1. A voltage standard for supplying predetermined voltage, said voltage standard comprising:
- a first transistor having base and emitter electrodes and a base-emitter junction therebetween, having a collector electrode and being operated at an absolute temperature substantially equal to T;
- a first source of current having no non-linear dependence upon the absolute temperature T;
- means for applying the current from said first source of current between the emitter and collector electrodes of said first transistor;
- a direct-coupled degenerative collector-to-base feedback connection of said first transistor for adjusting the emitter-to-base potential of said first transistor to condition said first transistor to conduct substantially all of said current applied thereto from said first source of current;
- a second transistor having base and emitter electrodes with a base-emitter junction therebetween, having a collector electrode, and being operated at an absolute temperature substantially equal to T;
- a second source of current for supplying a current proportional to that supplied by said first source of current;
- means for applying the current from said second source of current between the emitter and collector electrodes of said second transistor;

a. a direct-coupled degenerative collector-to-base feedback connection of said second transistor for adjusting the emitter-to-base potential of said second transistor to condition said second transistor to conduct substantially all of said current applied thereto from said second source of current; and

scaling means responsive to the difference between the emitter-to-base potentials of said first and said second transistors for providing a positive-temperature-coefficient potentials; and

means for summing the emitter-to-base potential of said first transistor and said positive-temperature-coefficient potential, thereby to obtain said predetermined voltage.

4,061,960

APPARATUS FOR PROVIDING REGULATED DIRECT CURRENT TO MAGNETIZING COILS FOR NON-DESTRUCTIVE MAGNETIC TESTING

Donald Lloyd, Houston, Tex., assignor to Tex-Tube Division of Detroit Steel Corporation

Filed Dec. 8, 1975, Ser. No. 638,547

Int. Cl.[2] G05F *1/64*

U.S. Cl. 323—9 **8 Claims**

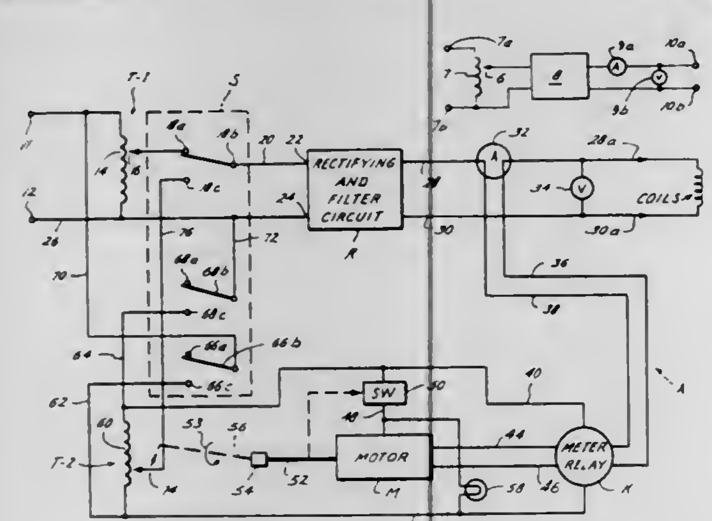

1. A current regulating apparatus for providing regulated direct current within a predetermined range for non-destructive magnetic testing and detecting of welding defects in pipe, comprising:

a. variable transformer means for receiving current from an alternating current power source and providing varying output alternating current levels;

b. means for converting the alternating current output from said variable transformer means into direct current;

c. detecting means for detecting the magnitude of direct current from said means for converting, said detecting means including:

1. means for establishing a predetermined critical range of current magnitudes to a range of current magnitudes between lower and higher limits which are sufficiently low to maintain a high signal-to-noise ratio for detecting defects and sufficiently high to permit detection of welding defects in the pipe while the pipe is moving at variable speeds; and

2. control means for forming a control signal when the direct current magnitude is at either said lower or higher limit of the predetermined critical range of current magnitudes;

d. means responsive to the control signal formed by said control means for adjusting the direct current from said variable transformer means until the direct current magnitude is within the predetermined critical range to thereby regulate the direct current to the predetermined critical range; and

e. magnetizing coil means electrically connected to said converting means for receiving the regulated direct current therefrom to thereby form a magnetic field for non-destructive magnetic testing and detecting of welding defects in pipe.

4,061,961

CIRCUIT FOR CONTROLLING THE DUTY CYCLE OF AN ELECTROSTATIC PRECIPITATOR POWER SUPPLY

Forester C. Baker, Fort Thomas, Ky., assignor to United Air Specialists, Inc., Cincinnati, Ohio

Filed July 2, 1976, Ser. No. 702,188

Int. Cl.[2] B03C *3/68;* **G05F** *1/44*

U.S. Cl. 323—21 **2 Claims**

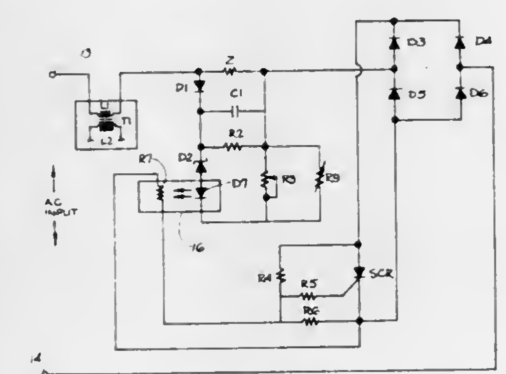

1. A circuit for controlling the duty cycle of a power supply of the type having a transformer and means connecting the secondary of said transformer to a two-stage electrostatic precipitator, said duty cycle being controlled in response to high level transients generated by arcing between components of said precipitator and reflected from the secondary of said transformer to the primary thereof, said circuit comprising:

a. switch means connected in series with the primary of said transformer and being controllable for allowing and inhibiting current flow therethrough, said switch means comprising the combination of a bridge rectifier and an SCR interconnected for passing both alternations of an A.C. signal applied across the primary of said transformer through said SCR in the same direction, said SCR having in association therewith a network for developing, from said A.C. signal, a gate voltage for maintaining said SCR in a conductive state;

b. means in association with the primary of said transformer for developing an output signal reflecting the current through the primary of said transformer; and

c. sensing and control means for operating said switch means to inhibit said current flow in response to the generation of said high level transients substantially until the arcing condition associated therewith is supressed and to otherwise allow said current flow, said sensing and control means including isolating means having a light emitting element for electrically isolating said sensing and control means from said switch means, the combination of a capacitor and means for charging said capacitor connected in parallel with said output signal developing means for charging said capacitor to a level reflecting the current through the primary of said transformer, said means for charging being connected to prevent discharging said capacitor through said output signal developing means and said SCR and through the primary of said transformer, and the series combination of threshold means, resistor means and said light emitting element connected in parallel with said capacitor, said threshold means conducting only when said output signal exceeds a preset level to operate said switch to inhibit said current flow, said output signal being reset to a level less than said preset level after an interval following said inhibiting of said current flow for resuming said current flow upon the termination of said interval.

4,061,962

CURRENT MIRROR AMPLIFIER AUGMENTATION OF REGULATOR TRANSISTOR CURRENT FLOW

Roger Green Stewart, Neshanic Station, N.J., assignor to RCA Corporation, New York, N.Y.

Filed June 11, 1976, Ser. No. 695,189

Int. Cl.[2] G05F *1/56*

U.S. Cl. 323—22 R **9 Claims**

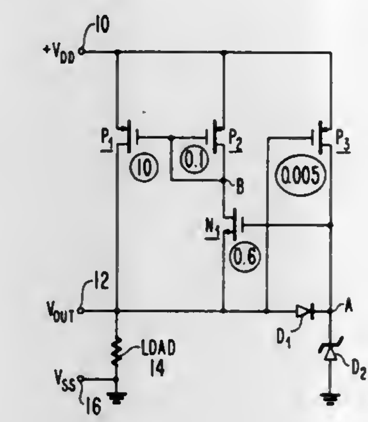

9. In a circuit including a first field effect transistor being of a first conductivity type and having drain, source and gate electrodes; and a three-terminal current amplifier having an input terminal to which the drain electrode of said first field effect transistor is connected, having an output terminal from which an amplified and inverted current response to the drain current flow of said first field effect transistor is supplied to the source electrode of said first field effect transistor to augment its source current flow, and having a common terminal, the improvement wherein said current amplifier comprises:

second and third field effect transistors each being of a second conductivity type complementary to said first conductivity type, being of enhancement type, and having drain and source and gate electrodes, said second transistor having a scaling factor or width-to-length ratio that is relatively small compared to that of said first transistor, whereby said first and second transistors co-operate as a voltage amplifier with gain in excess of unity;

connections of the source electrodes of said second and third field transistors to the common terminal of said current amplifier;

connection of the input terminal of said current amplifier to the drain electrode of said second field effect transistor;

connection of the drain electrode of said third field effect transistor to the output terminal of said current amplifier; and

an interconnection between the base electrodes of the second and third field effect transistors to which the input terminal of said current amplifier is connected.

4,061,963

LOAD TAP CHANGER SYSTEM

John W. Green, New Wilmington, Pa., assignor to Westinghouse Electric Corporation, Pittsburgh, Pa.

Filed Apr. 27, 1976, Ser. No. 680,632

Int. Cl.[2] H01F *29/04*

U.S. Cl. 323—43.5 R **7 Claims**

1. A load tap changer system, comprising:

tap selector switching means having contact arms selectively movable between a plurality of electrical contacts, said plurality of electrical contacts being adapted for connection to taps on an electrical winding disposed to supply current to a load circuit,

drive means for operating said tap selector switching means during a tap change cycle,

means for electrically isolating each contact arm prior to movement thereof by said drive means,

current transformer means disposed to measure current flow through the contact arm to be moved during a tap change cycle, prior to movement thereof by said drive means,

protective means responsive to said current transformer means for preventing said drive means from moving a contact arm which has current flowing therethrough,

means connected between said current transformer means and said protective means including a tapped transformer having switch means connected to said taps, said switch

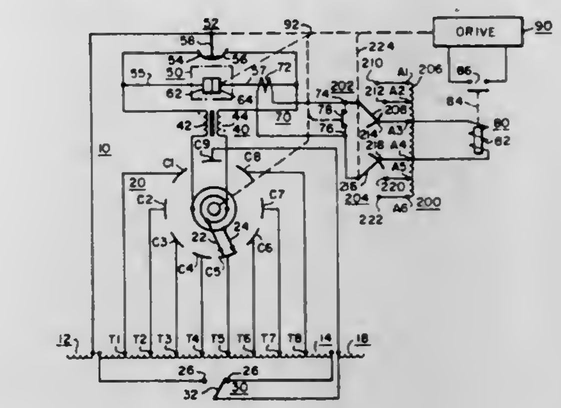

means being operated in response to said drive means for providing current to said protective means, when said current transformer means is providing an output, which is within the operating range of the protective means regardless of which taps on said electrical winding are connected in said load circuit.

4,061,964

ARMATURE OPERATION-RELEASE TESTING APPARATUS

Hitoshi Kubota, Yokohama, and Takashi Kobayashi, Fujisawa, both of Japan, assignors to Hitachi, Ltd., Japan

Filed July 13, 1976, Ser. No. 704,963

Claims priority, application Japan, July 14, 1975, 50-85401

Int. Cl.[2] G01R *31/02*

U.S. Cl. 324—28 SE **1 Claim**

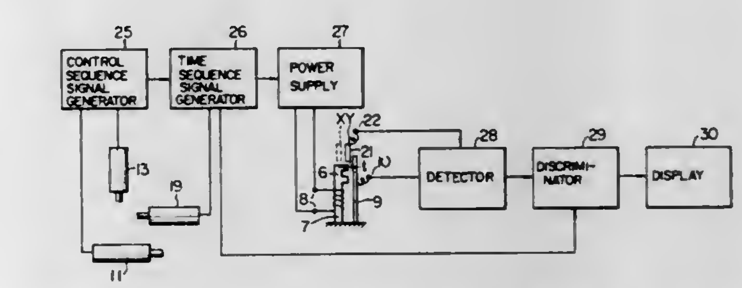

1. An armature operating-release testing apparatus for testing the armature operating and releasing characteristics of an electromagnetic relay comprising an armature, a core and an electromagnetic coil, said apparatus comprising:

a. means for causing reciprocating movement of an externally controlled sensor between a stand-by position, at which said sensor is initially positioned opposite to and free from any electrical engagement with said armature of said electromagnetic relay disposed at a test position, and a detecting position at which said sensor is slightly displaced toward said armature beyond the armature attracting surface of said core;

b. power supply means adapted to be switched over for selectively supplying a predetermined operating current and a predetermined releasing current to said electromagnetic coil of said electromagnetic relay thereby causing movement of said armature toward and away from said core;

c. detecting means connected to said armature and said sensor for detecting electrical engagement between said armature and said sensor; and

d. test time sequence signal generating means for controlling the operating timing of said detecting means, said power supply means and said sensor moving means so as to test said electromagnetic relay for the operating characteristic by supplying the operating current to said electromag-

netic coil while said sensor is positioned at said stand-by position, advancing said sensor to said detecting position in a predetermined period of time, and detecting the output of said detecting means, and so as to test said electromagnetic relay for the releasing characteristic by retracting said sensor to said stand-by position from said detecting position, switching over said power supply means to supply the releasing current to said electromagnetic coil in lieu of the operating current, advancing said sensor to said detecting position again in a predetermined period of time, and detecting the output of said detecting means.

4,061,965
METHOD AND APPARATUS FOR MONITORING A CATHODICALLY PROTECTED CORRODIBLE HOLLOW MEMBER

Earnest E. Nelson, Woodbury Heights, N.J., assignor to Mobil Oil Corporation, Dallas, Tex.
Filed May 24, 1976, Ser. No. 689,161
Int. Cl.² G01N *27/00;* **G01R** *31/12, 31/02*
U.S. Cl. 324—29 **19 Claims**

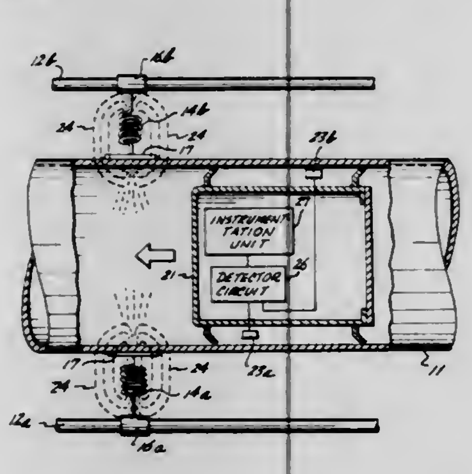

1. In a cathodic protection system for an elongate corrodible member routed through an electrolytic environment, said corrodible member having a longitudinally extending channel therethrough, said cathodic protection system including at least one sacrificial anode disposed within said electrolytic environment in spaced proximity to said elongate corrodible member, and connecting means for electrically connecting said sacrificial anode to said elongate corrodible member, an improved system for monitoring the condition of said cathodic protection system comprising:

first means, responsive to electrical current flowing through said connecting means, for establishing an electromagnetic field within said channel of said corrodible member, said electromagnetic field being proportional to said electrical current flowing through said connecting means; and

second means, positionable in said longitudinally extending channel of said corrodible member, for detecting the magnitude of said electromagnetic field established within said channel of said corrodible member and for supplying a signal representative of the magnitude of said electromagnetic field.

4,061,966
METHOD AND APPARATUS FOR GENERATING A CONTINUOUS MAGNETIC FIELD DETERMINING THE POSITION OF AN INDUCTIVE SENSING ELEMENT THEREIN

Pavel Sedlacek, Klecany, and Jiri Hajek, Prague, both of Czechoslovakia, assignors to Ceskoslovenska akademie ved, Prague, Czechoslovakia
Filed Jan. 19, 1976, Ser. No. 650,020
Claims priority, application Czechoslovakia, Jan. 20, 1975, 374/75
Int. Cl.² G01R *33/12*
U.S. Cl. 324—207 **8 Claims**

1. In a method of electromagnetically determining the relative position of an inductive sensing element along a specified first direction, the method comprising the steps of exciting an array of parallel conductors sequentially arranged in the first direction and disposed in magnetic coupling relation with the sensing element with current pulses to vary the induced voltage response of the sensing element, and measuring the time of occurrence of a prescribed value of such induced voltage with respect to the start of an excitation interval of the conductors as a measure of the distance, in the first direction, of the sensing element from a reference point, the improvement wherein the

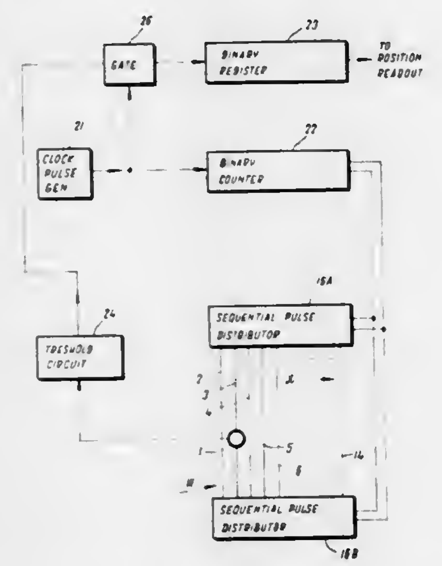

excitation step comprises energizing the conductors by a consecutive sequence of adjacent substantially rectangular voltage pulses to yield a resultant substantially continuous, travelling-wave magnetic field along the first direction to produce a correspondingly continuous induced voltage response in the sensing element and in which the measuring step comprises determining the instant relative to the start of the energization of the conductors at which the continuous voltage response induced in the sensing means reaches a predetermined value in a prescribed sense.

4,061,967
SUPPORT SYSTEM FOR ROTATABLE DETECTING ELEMENT

James R. Hall, Huffman, Tex., assignor to Hughes Tool Company, Houston, Tex.
Filed Jan. 3, 1977, Ser. No. 756,576
Int. Cl.² G01R *33/12*
U.S. Cl. 324—260 **6 Claims**

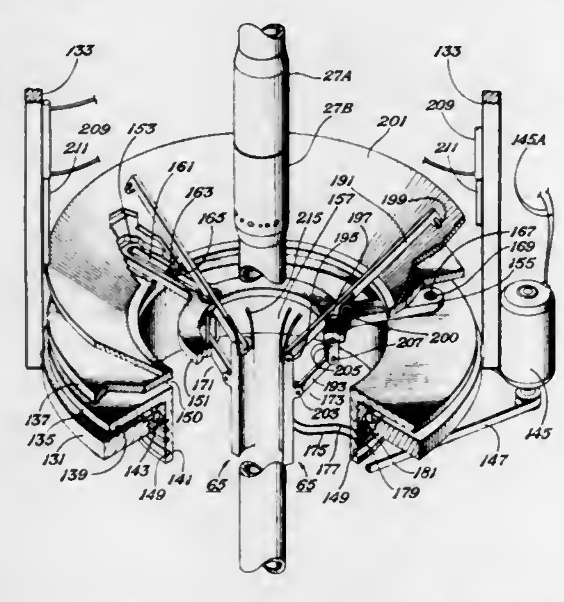

1. A system for use with a detecting means for detecting identification symbols on drill pipe sections as they are moved vertically along a given path of travel by a drilling system employed for carrying out a drilling operations in the earths formations, said detecting means comprising a detecting element to be rotated around the drill pipe sections as they are

moved vertically along said path of travel, said system comprising:

stationary support means,

outer plate means having an opening for receiving said drill pipe sections as they are moved vertically along said path of travel by said drilling system,

said outer plate means being supported for rotation by said support means with said opening in line with said given path of travel,

means for rotating said outer plate means,

inner plate means having an opening for receiving said drill pipe sections as they are moved vertically along said path of travel by said drilling system,

the opening of said outer plate means being large enough to receive said inner plate means and to allow said inner plate means to be moved laterally with said opening of said outer plate means,

coupling means for supporting said inner plate means within said opening of said outer plate means and for coupling said inner plate means to said outer plate means for rotation therewith,

said coupling means allowing said inner plate means to move laterally relative to said outer plate means and to said support means to allow said inner plate means to remain generally concentric with said drill pipe sections as they are moved through said opening of said inner plate means, and

attaching means for attaching said detecting element to said inner plate means for rotation therewith and for locating said detecting element close to said drill pipe sections as they are moved through said opening of said inner plate means.

4,061,968
PROCESS OF AND APPARATUS FOR NON-DESTRUCTIVE EDDY CURRENT TESTING INVOLVES THE SUPPRESSION OF DISPLAYED LOBES CORRESPONDING TO FAULT PARAMETERS TO BE ELIMINATED FROM THE DISPLAY

Michel Pigeon, Bures-sur-Yvette, France, assignor to Commissariat a l'Energie Atomique, Paris, France
Filed Sept. 7, 1976, Ser. No. 720,599
Int. Cl.² G01R *33/12*
U.S. Cl. 324—40 **4 Claims**

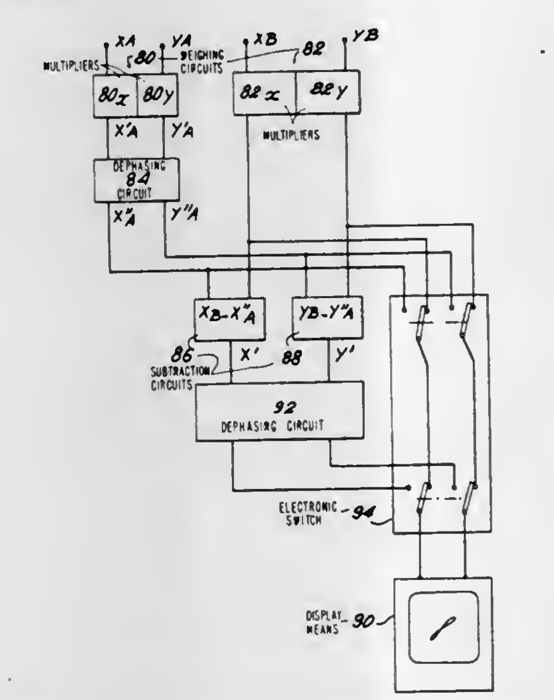

1. Process for non-destructive testing by eddy currents of the kind in which:

a probe is displaced in the proximity of the workpiece to be tested,

said probe is supplied by an excitation current of *n* different frequencies,

the components of each of the *n* frequencies in the measurement signal are analysed,

the improvement comprising the steps of determining for each component, its resistive part X in phase with the excitation current at the same frequency, and its reactive part Y in quadrature,

modifying the phase and amplitude of the determined parts X_1 and Y_1 for the signal at a first frequency so that the component of that signal due to a parameter to be eliminated is made to coincide in phase and amplitude with the parts X_2 and Y_2 for the signal at a second frequency due to the same parameter,

subtracting the parts X_2 and Y_2 from the parts X_1 and Y_1 thus modified, which provides a new set of resistive and reactive parts X′ and Y′, permitting to be obtained a representative curve for which the contribution of the undesirable parameter has been eliminated, and displaying the signal of the components X′ and Y′ on a plane.

4,061,969
APPARATUS FOR TESTING PRINTED CIRCUIT BOARDS

Anthony James Dean, Congleton, England, assignor to International Computers Limited, London, England
Filed May 5, 1976, Ser. No. 683,684
Claims priority, application United Kingdom, May 17, 1975, 21094/75
Int. Cl.² G01R *15/12*
U.S. Cl. 324—73 PC **12 Claims**

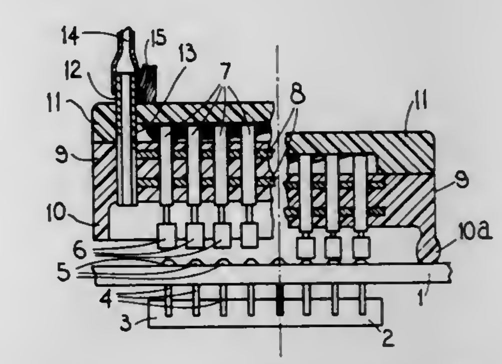

1. Apparatus for testing electrical installations on a planar circuit board which presents on a surface thereof a pattern of connections, the apparatus including; a group of probe members connectable to a circuit evaluation means; a plate like support means for mounting the probe members in alignment with each other such that the probe members conform to the pattern, and such that the probe members are individually displaceable with respect to the support means along the direction towards and away from the connections; sealing means connected with the support means, and effective in operation to form a closed boundary enclosing a space occupied by the probes and the connections and to enable a pneumatic clamp seal to be effected between the boundary and the circuit board thereby to maintain the support means and thus the probe members in a desired position with respect to the circuit board; a wall provided around the periphery of the support means to form therewith a cup like housing for the probe members and to co-operate with the space, deformable means associated with said chamber and co-operable with an air path between the chamber and space and means for producing within the space and chamber a pressure which is lower than that outside the boundary of the space so as to produce the pneumatic clamp effect when the seal is contacted with a board and also to cause the deformable means to load each probe into engagement with the circuit connections.

4,061,970
TRANSMISSION SYSTEM AND REPEATER STATIONS THEREFOR
Jean Magneron, Mezieres-les-Metz, France, assignor to E.L.A.P., Mondelange, France
Filed May 19, 1976, Ser. No. 687,739
Int. Cl.² H04B *7/14*
U.S. Cl. 325—2 **11 Claims**

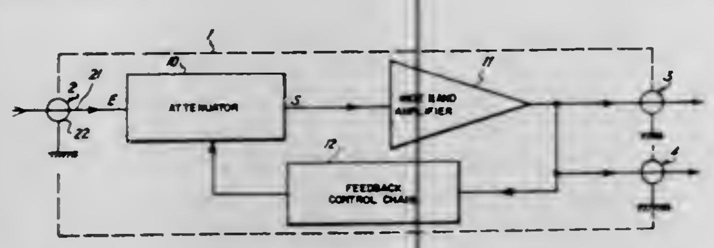

1. A repeater station for cable transmission of high frequency signals covering a predetermined wide band of frequencies and including a reference component having a predetermined frequency, said station comprising:
an equalizer including a resistor T pad having two transverse resistive members and one leg member, a series resonant circuit connected in parallel across both transverse resistive members of said T, and a parallel resonant circuit connected in series with said leg member of said T,
ends of said transverse resistive members defining input and output of said equalizer, while an end of said leg member is coupled to ground,
said two resonant circuits having an adjustment means for adjusting the resonant frequency of each, and
automatic control means having an input coupled to said equalizer output and output coupled to said adjusting means, said automatic control means responsive to a level of said reference cmmponent of said equalizer output to adjust the resonant frequencies of said two resonant circuits thereof and a corresponding substantially common frequency in a sense to maintain substantially constant said level of said reference component, whereby a signal level/frequency response slope of said equalizer is varied to correct for increasing losses in said transmitting cable of higher frequencies in said predetermined wide band frequencies.

4,061,971
CITIZEN BAND RADIO MOUNT
Morris R. Barrons, 801 Greenwood Drive, Denton, Tex. 76201
Filed Oct. 7, 1976, Ser. No. 730,345
Int. Cl.² H01B *1/38*
U.S. Cl. 325—15 **15 Claims**

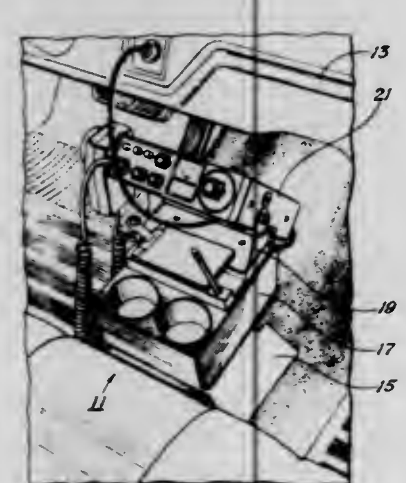

1. A Citizens' Band (CB) radio combination adapted to facilitate rapid installation and removal of a Citizens' Band radio into and from a vehicle having a floorboard, comprising:
a. a base tray adapted to conformably fit the floorboard of the vehicle; said base tray having a receiving tray depression of predetermined longitudinal, lateral and depth dimensions for receiving a base block;
b. a base block conformably and removably received in said receiving tray depression and dimensioned to fit closely and conformably therewithin; said base block having vacuum relief means facilitating installation and removal from said receiving tray depression;
c. a mounting bracket connected with said base block and having means for connecting with a CB radio; said mounting bracket having angle adjusting means so as to fit a CB radio in said vehicle as desired; and
d. a CB radio having readily removable plug-in connectors for connections with a power source and with an antenna; said CB radio being connected to said mounting bracket so as to be set at a plurality of angles with respect to said base block and said base tray; such that said CB radio can be readily set into and lifted from said base tray by way of said mounting bracket and said base block to facilitate installation and removal from said vehicle, as for preventing theft, without requiring tools for unfastening dash mountings and the like.

4,061,972
SHORT RANGE INDUCTION FIELD COMMUNICATION SYSTEM
Victor Robert Burgess, 35 Koonawarra Avenue, Lindfield, New South Wales 2070, Australia
Continuation-in-part of Ser. No. 529,091, Dec. 3, 1974. This application Oct. 20, 1976, Ser. No. 734,381
Int. Cl.² H04B *1/38*
U.S. Cl. 325—16 **10 Claims**

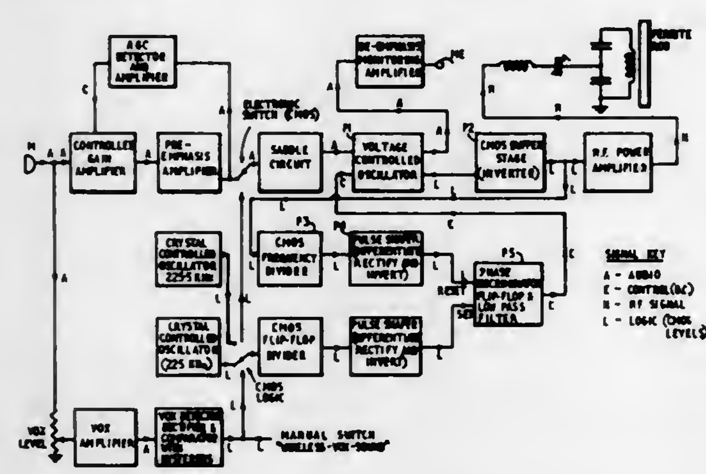

1. An induction field communication system which utilizes a modulation format enabling selection between similar electromagnetic signals by capture effect, said system comprising:
a. transmitting means for transmitting signals in said format and including an induction field generating aerial and microphone circuit, said transmitting means being equipped with an audio automatic gain control in its microphone circuit, said transmitting means having first and second transmitting modes,
b. a signal receiver for receiving signals in said format and having an induction field receiving aerial, said receiver being sufficiently within the induction field directly generated by said field generating aerial to cause signals from said transmitting means to capture said receiver to the exclusion of other similar signals received by said receiving aerail, and
c. control means for switching the transmitting means from said first transmitting mode to said second transmitting mode, said second transmitting mode being effective to switch the receiver to a different receiving mode.

4,061,973
SYNTHESIZER
Fred Alan Reimers, Lake in the Hills; Robert Martin Beckmann, Hanover Park; William Arthur Burzynski, Des Plaines; Dennis Eugene Tomlinson, Elgin, and William Henry Schwartz, Hoffman Estates, all of Ill., assignors to Motorola, Inc., Schaumburg, Ill.
Filed Mar. 25, 1976, Ser. No. 670,296
Int. Cl.² H04B *1/40*
U.S. Cl. 325—17 **10 Claims**

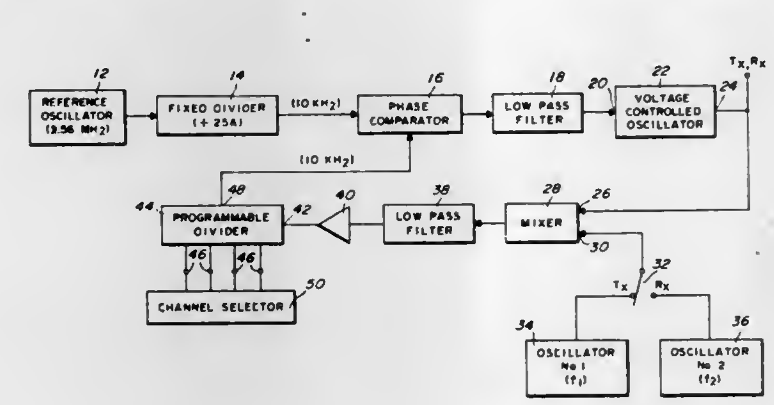

1. A frequency synthesizer for a transceiver comprising:
a reference oscillator means for generating a predetermined frequency signal;
a phase comparator means, having a pair of inputs and an output, for producing at its output an error signal representative of the difference in phase of signals applied to its inputs;
a means for coupling the reference oscillator means to the first phase comparator input;
a low pass filter means, coupled to the phase comparator output, for filtering the error signal;
a voltage controlled oscillator means, having a voltage control terminal and an output terminal, for producing an oscillator signal at its output the frequency of which is dependent on the signal applied to the voltage control terminal;
a means for coupling the filtered error signal to the voltage control terminal of the voltage controlled oscillator means;
a mixer means, having a pair of inputs and an output, for producing at its output a signal having a frequency equal to the difference in frequency of signals applied at its inputs;
a means for directly connecting the output of the voltage controlled oscillator to the first input of the mixer means;
a transmit oscillator for producing a predetermined frequency signal f_1;
a receive oscillator for producing a predetermined frequency signal f_2;
a means for switchably coupling either the transmit oscillator signal or the receive oscillator signal to the second input of the mixer means;
a means for low pass filtering the output of the mixer means;
a programmable divider means, having an input, an output, and a plurality of control terminals, for producing at its output a frequency division of a signal received at its input, the frequency divisor being programmably dependent on the signals at the control terminals;
a channel selector means, coupled to the control terminals of the programmable divider, for selectively controlling the frequency divisor of said divider;
a means for coupling the low pass filtered mixer output to the input of the progammable divider; and
a means for coupling the output of the programmable divider to the second input of the phase comparator means,
whereby the output of the voltage controlled oscillator means is adaptable for tuning the transceiver.

4,061,974
ULTRA STABLE FREQUENCY DISTRIBUTION SYSTEM
James C. Fletcher, Administrator of the National Aeronautics and Space Administration, with respect to an invention of; Richard L. Sydnor, Altadena, and John W. MacConnell, La Canada, both of Calif.
Filed June 21, 1976, Ser. No. 699,002
Int. Cl.² H04B *1/50*
U.S. Cl. 325—58 **9 Claims**

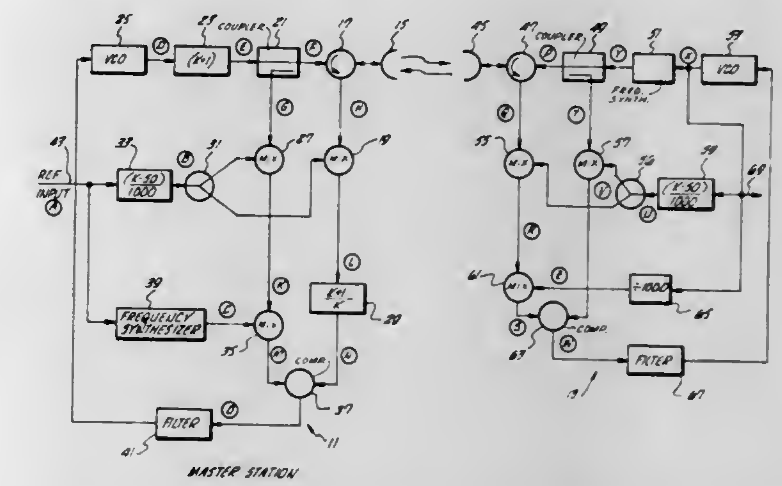

1. A system for distributing a reference signal to remote locations by radio frequency transmission, said system comprising:
a master station having a transmitting and receiving means, said master station including:
a variable phase oscillator means generating a signal for application to said transmitting means, said signal having a certain frequency and a phase related to its input signal;
means for receiving a reference signal having a standard frequency and phase;
means for mixing the reference signal with a transmitted signal and a received signal, respectively; and
comparison means for generating a signal representing the phase difference between the transmitted signal and the received signal from said mixing means, said phase difference signal being supplied to said oscillator as its input signal; and
a slave station having a transmitting and receiving means, said slave station including:
a variable phase oscillator means generating a signal for application to said transmitting means, said signal having a certain frequency and a phase related to its input signal, the generated signal having a frequency and phase substantially equal to the frequency and phase of the reference signal received at said master station; and
comparison means responsive to transmitted signal and a received signal for generating a signal representing the phase difference between said transmitted signal and said received signal, said phase difference signal being supplied to said oscillator as its input signal.

4,061,975
RECEIVER FOR PULSES OF DIFFERENT WIDTHS
Tetuya Sugai, Tokyo, Japan, assignor to Nippon Steel Corporation, Tokyo, Japan
Division of Ser. No. 459,718, April 10, 1974, Pat. No. 3,993,954. This application Sept. 7, 1976, Ser. No. 720,766
Claims priority, application Japan, Apr. 11, 1973, 48-40401; Nov. 9, 1973, 48-125439
Int. Cl.² H03K *5/20*
U.S. Cl. 325—322 **1 Claim**

1. A width-modulated pulse demodulator system for receiving pulses of different widths and decoding them, said demodulation system comprising an arrangement of series connected NAND gates formed in an integrated circuit, and a control circuit including additional NAND gates, said series arrangement receiving the pulses of different widths and passing said pulses through said series arrangement of NAND gates, the

output level of each NAND gate of said series arrangement at a given time after receiving a particular pulse being dependent upon the width of the particular pulse received, each of said additional NAND gates being respectively interconnected to

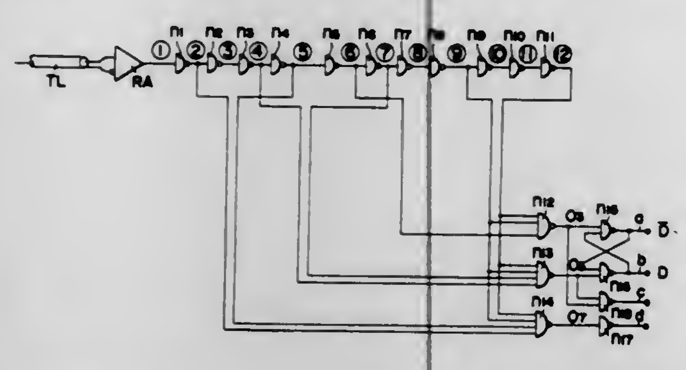

the output of predetermined NAND gates from said series arrangement which have identical levels at given times after receiving a pulse, whereby said control circuit produces a signal depending upon the outputs of predetermined NAND gates.

4,061,976
RECEIVERS FOR PULSES OF DIFFERENT WIDTHS
Tetuya Sugai, Tokyo, Japan, assignor to Nippon Steel Corporation, Tokyo, Japan
Division of Ser. No. 459,718, April 10, 1974, Pat. No. 3,993,954. This application Sept. 7, 1976, Ser. No. 720,767
Claims priority, application Japan, Apr. 11, 1973, 48-40401; Nov. 9, 1973, 48-125439
Int. Cl.² H03K *5/20*
U.S. Cl. 325—322 **10 Claims**

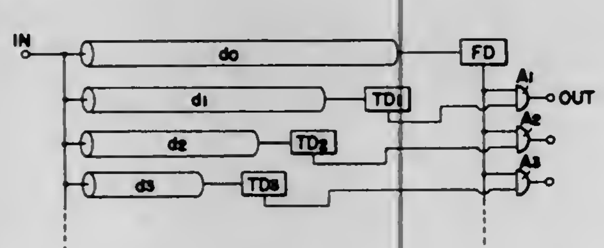

1. A width-modulated pulse demodulator system for receiving pulses of different widths and decoding them, said demodulator system comprising a plurality of delay elements each having a different delay time, each of said delay elements receiving said pulses of different widths, a front-edge-waveform detector circuit serially connected to the output of the delay element having the longest delay time, a plurality of rear-edge-waveform detector circuits each serially coupled to a respective one of the remaining delay elements, and a plurality of AND gates each having two inputs, one input of each AND gate being commonly connected to the output of said front-edge-waveform detector circuit, and the other input of each AND gate connected to a respective output of said rear-edge-waveform detector circuits.

4,061,977
PHASE TRACKING NETWORK
David M. Motley, Santa Ana, and Andrew M. Kameya, Costa Mesa, both of Calif., assignors to Hycom Incorporated, Irvine, Calif.
Filed May 17, 1976, Ser. No. 687,349
Int. Cl.² H03H *7/36*
U.S. Cl. 325—323 **18 Claims**

7. An apparatus adapted to receive an input signal which contains phase error wherein the apparatus provides a variable reference signal which is an estimate of the level of the input signal, said apparatus comprising:
phase correction means responsive to the input signal for correcting at least some of the phase error to provide a phase corrected signal;
detector means responsive to the phase corrected signal for providing a detected signal;
error calculator means responsive to at least one of the phase corrected signal and the detected signal to provide a first signal which is related to said variable reference signal and first means responsive to the first signal for providing a phase error signal;

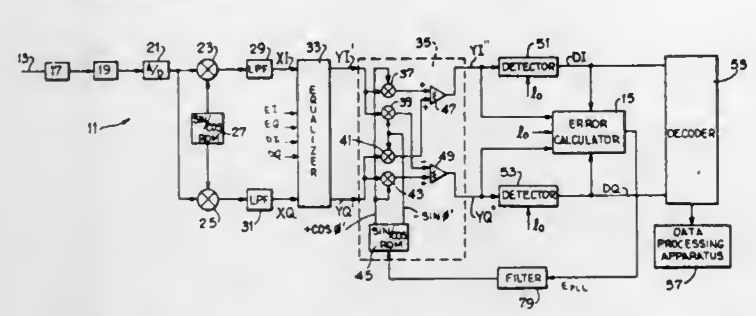

said first means including means for dividing the first signal by the variable reference signal whereby the phase error signal is made substantially independent of variations in the reference signal; and
said phase correction means including means responsive to the phase error signal for at least partially correcting of the phase error in the input signal.

4,061,978
TIMING RECOVERY FOR AN AUTOMATICALLY EQUALIZED DATA MODEM
David M. Motley, Santa Ana; Naif D. Salman, Orange, and King Y. Cheng, Tustin, all of Calif., assignors to Hycom Incorporated, Irvine, Calif.
Continuation of Ser. No. 505,052, Sept. 11, 1974, abandoned. This application Aug. 2, 1976, Ser. No. 710,655
Int. Cl.² H04B *1/10, 3/04;* **H04L** *7/00*
U.S. Cl. 325—324 **11 Claims**

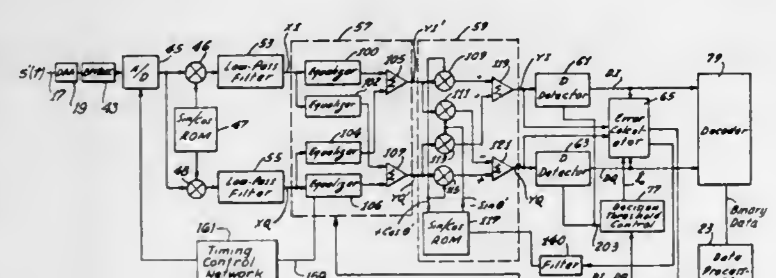

9. An apparatus adapted to receive a distorted analog signal comprising:
first means for sampling the analog signal to provide a plurality of samples with adjacent samples being separated by a first interval of time, the samples being expressed in a digital format to form a distorted digital data signal;
equalizer means including a plurality of taps, each of the taps having a multiplying coefficient with characteristics for substantially equalizing the distorted digital signal to provide a substantially equalized signal;
second means responsive to the characteristics of the multiplying coefficient of at least one of the taps of the equalizer means to control the duration of the first interval of time; and
phase correction means for correcting the phase of at least one of the data signal and the equalized signal substantially independently of the multiplying coefficients.

4,061,979
PHASE LOCKED LOOP WITH PRE-SET AND SQUELCH
Andrew M. Walker, Gaithersburg, and Ova Gene Gabbard, Germantown, both of Md., assignors to Digital Communications Corporation, Gaithersburg, Md.
Filed Oct. 20, 1975, Ser. No. 624,092
Int. Cl.² H04B *1/16*
U.S. Cl. 325—419 **9 Claims**

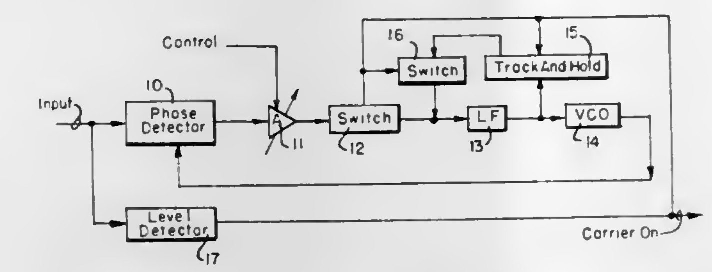

1. An improved phase locked loop with pre-set capabilities including an input connected to a phase detector, and, serially connected thereafter, a loop filter and a loop oscillator, the improvement comprising,
means for detecting the presence and absence of a carrier signal connected to said input,
track and hold means having an input connected to said loop filter output and an output connected to an input of said loop filter and responsive to said means for detecting, for sensing and storing loop filter output in the presence of said carrier and for supplying a signal representative of said stored loop filter output to said loop filter input in the absence of said carrier to maintain the charge of the loop filter in substantially the same condition as when the carrier is present,
whereby said loop oscillator is pre-set in the absence of said carrier.

4,061,980
RADIO RECEIVER WITH PLURAL CONVERTERS AND FREQUENCY CONTROL
Tsutomu Sato, Tokyo, Japan, assignor to Sony Corporation, Tokyo, Japan
Filed Oct. 18, 1976, Ser. No. 733,528
Claims priority, application Japan, Oct. 21, 1975, 50-143113[U]
Int. Cl.² H04B *1/26*
U.S. Cl. 325—419 **3 Claims**

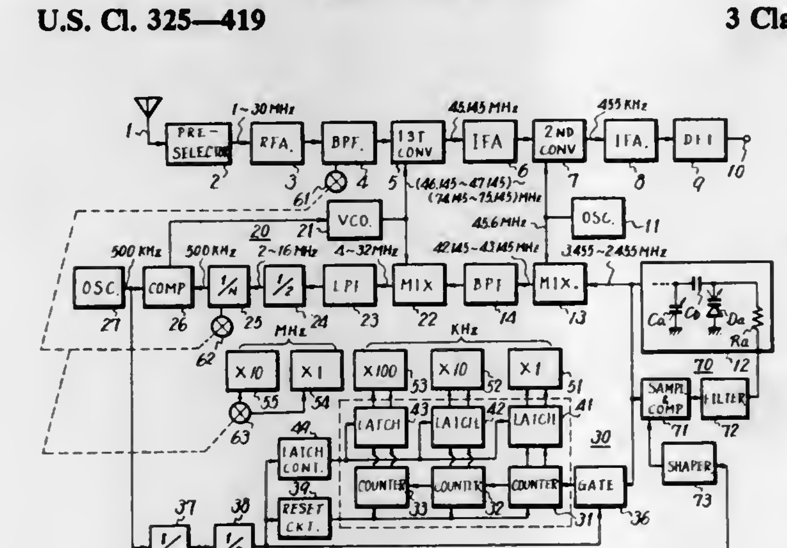

1. A radio receiver comprising:
a. first and second frequency converters for producing first and second intermediate frequency signals;
b. a first oscillator for generating a first local signal to be supplied to said second frequency converter;
c. a variable frequency oscillator,
d. a first mixer for producing a beat signal between said first local signal and an output signal generated by said variable frequency oscillator;
e. a variable frequency divider for producing a signal having a predetermined frequency based on said beat signal;
f. a second oscillator for generating a reference signal having the frequency same as that of the signal produced by said variable frequency divider;
g. a comparison circuit for comparing the phase of said reference signal with that of said signal produced by said variable frequency divider and for producing a control signal;
h. a voltage controlled oscillator for generating a second local signal to be supplied to said first frequency converter in response to said control signal; and
i. a second mixer which is supplied with the second local signal and beat signal and produces a beat signal between both the signals, said last beat signal produced by said second mixer being supplied to said variable frequency divider.

4,061,981
VOLTAGE VARIABLE CAPACITOR TUNED RADIO RECEIVER HAVING DELAYED AUTOMATIC FREQUENCY CONTROL AT TURN-ON
Thomas E. Endres, and Donald W. Rodeman, both of Kokomo, Ind., assignors to General Motors Corporation, Detroit, Mich.
Filed Aug. 18, 1976, Ser. No. 715,394
Int. Cl.² H04B *1/26*
U.S. Cl. 325—419 **3 Claims**

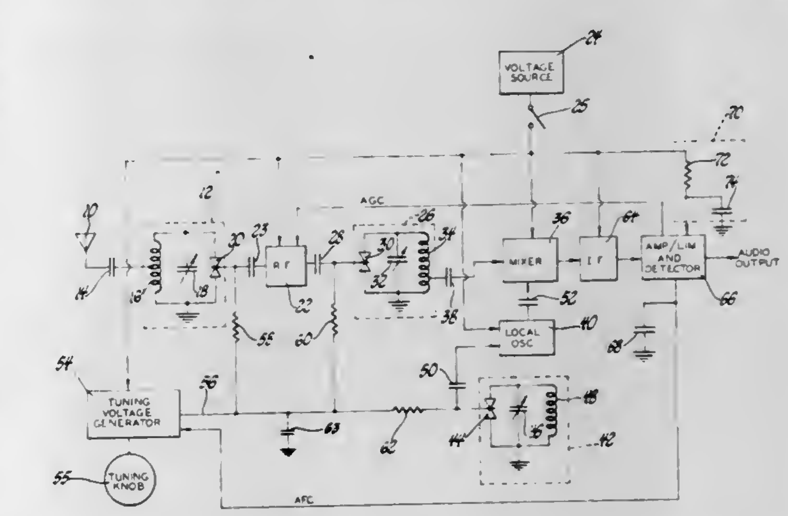

1. A radio frequency receiver comprising: at least one tunable stage whose tuned frequency determines the receiver response to an incoming RF carrier signal, the tunable stage including a voltage variable capacitor and having a tuned frequency determined by the value of a bias voltage across the voltage variable capacitor; means effective upon energization of the receiver to supply a bias voltage across the voltage variable capacitor, the bias voltage increasing to a selected bias voltage value corresponding to a selected tuned frequency after a time delay determined by circuit parameters following initial energization of the radio receiver, the selected bias voltage value providing receiver response to a selected incoming RF carrier signal, the tuned frequency varying toward the selected tuned frequency as the bias voltage value increases to the selected bias voltage value; a frequency control circuit effective to vary the bias voltage in amount and sense tending to adjust the tuned frequency to obtain a maximum receiver response condition to an incoming RF carrier signal, the frequency control circuit tending to effect adjustment of the tuned frequency to obtain a maximum receiver response condition to an incoming RF carrier signal different from the selected RF carrier signal when the tuned frequency of the tunable stage corresponds to said different incoming RF signal while the bias voltage value increases to the selected bias voltage value; and a delay circuit effective upon energization of the receiver to inhibit operation of the frequency control circuit for a time at least equal to the time delay required for the tuning voltage to attain the selected tuning voltage value after the receiver is first energized, the frequency control circuit being rendered inoperative by the delay circuit to adjust the tuned frequency of the tunable stage to obtain maximum

receiver response to an incoming RF carrier signal different from a selected RF carrier signal.

4,061,982

CHANNEL SELECTION APPARATUS PROVIDED WITH MEMORY FOR DIGITALIZING AND STORING CHANNEL SELECTION VOLTAGE

Kazumi Kawashima, Kyoto, Japan, assignor to Matsushita Electric Industrial Co., Ltd., Osaka, Japan

Filed Jan. 26, 1976, Ser. No. 652,318

Claims priority, application Japan, Feb. 6, 1975, 50-16044

Int. Cl.² H04B *1/06*

U.S. Cl. 325—464 **5 Claims**

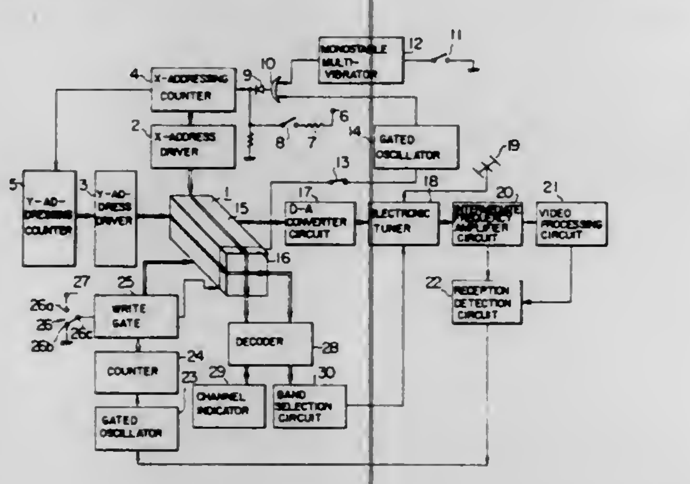

1. A channel selection apparatus comprising:

an electronic tuner using a voltage-dependent variable reactance element as a turning element,

a memory block having a plurality of memory addresses which are addressed in the matrix state by an X-address and a Y-address, said memory block storing digital voltage signals at said memory addresses which are digital versions of a plurality of channel selection voltages to be applied to said voltage-dependent reactance element for selecting a plurality of channels, said memory block further storing skip control signals for controlling whether the channels corresponding to the respective memory addresses are to be selected or to be skipped,

an addressing circuit for specifying an address to be read out of said memory block comprising an X-addressing counter for addressing an X-address of said memory block and a Y-addressing counter for addressing a Y-address of said memory block, said Y-addressing counter being controlled by the final bit output of said X-addressing counter,

a switch,

a monostable multivibrator for generating a pulse signal when said switch is operated, said multivibrator supplying a pulse signal to said X-addressing counter for shifting the read-out address by one address,

a skipping pulse generating circuit connected to the output of said memory block for activating said addressing circuit to step the readout address by one when said skip control signal read out of said memory block at the address specified by said addressing circuit indicates that a skipping pulse is to be supplied to said X-addressing counter, and

a digital to analog converter for converting the digital voltage signals read out of said memory block at the address specified by said addressing circuit to an analog channel selection voltage for application to the voltage-dependent variable reactance element of said electronic tuner.

4,061,983

TRANSISTOR AMPLIFIER WITH PROTECTIVE CIRCUIT

Tadao Suzuki, Tokyo, Japan, assignor to Sony Corporation, Tokyo, Japan

Filed Dec. 8, 1975, Ser. No. 638,297

Claims priority, application Japan, Dec. 11, 1974, 49-142334

Int. Cl.² H03F *21/00*

U.S. Cl. 330—207 P **10 Claims**

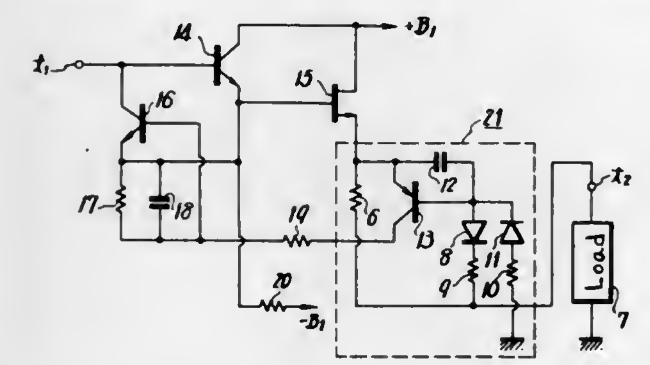

1. The combination of a transistor amplifier and an associated protective circuit comprising:

a first amplifying stage having input and output terminals, said first amplifying stage comprising a bipolar transistor with a field effect transistor having a triode characteristic, low output impedance and large convergence conductance, each of said transistors having first, second and third electrodes, the first electrode of said bipolar transistor being coupled to said input terminal, the second electrodes of said bipolar and field effect transistors being coupled to a first voltage source, the third electrode of said bipolar transistor being coupled to the first electrode of said field effect transistor, the third electrode of said field effect transistor being coupled to said output terminal, and the third electrode of said bipolar transistor and the first electrode of said field effect transistor being coupled to a second voltage source which has a polarity opposite to that of the first voltage source;

a load connected to the output terminals of said first amplifying stage;

a second amplifying stage having a second input terminal coupled to said input stage and a second output terminal coupled to said output terminal of said first amplifying stage and amplifying a signal having a different polarity from that of said signal applied to said first amplifying stage, said second amplifying stage comprising second bipolar and field effect transistors which are respectively different in type from the transistors of said first amplifying stage and each of which has first, second and third electrodes, the first electrode of said second bipolar transistor being coupled to said second input terminal, the second electrode of said second bipolar and field effect transistors being coupled to a third voltage source, the third electrode of said second bipolar transistor being coupled to the first electrode of said second field effect transistor, the third electrode of said second field effect transistor being coupled to said second output terminal, and the third electrode of said second bipolar transistor and the first electrode of said second field effect transistor being coupled to a fourth voltage source which is opposite in polarity to said third voltage source;

a first detecting circuit for detecting an overload condition of said amplifying stage thereby to produce a control signal;

a second detecting circuit for detecting an overload condition of said second amplifying stage thereby to produce a second control signal;

a first muting circuit connected to said input terminals of said amplifying stage, said first muting circuit including a switching element coupled between the first and third electrodes of said bipolar transistor, and means for applying a control signal from the first detecting circuit to said switching element and means causing said switching element to turn off said bipolar and field effect transistors, when said control signal indicates an overload condition; and

a second muting circuit connected to said second input terminal of said second amplifying stage, said second muting circuit comprising a second switching element coupled between the first and third electrodes of said second bipolar transistor; and means for applying a control signal from the second detecting circuit to said second switching element and means causing said second switching element to turn off said second bipolar and second field effect transistors when said control signal from said second detecting circuit indicates an overload condition.

4,061,984

TRANSISTOR POWER AMPLIFIER FOR TRANSMITTING SYSTEMS

Johann Gerhard Zirwas, Groebenzell, Germany, assignor to Siemens Aktiengesellschaft, Berlin & Munich, Germany

Filed Sept. 8, 1976, Ser. No. 721,475

Claims priority, application Germany, Sept. 24, 1975, 2542638

Int. Cl.² H03F *1/26*

U.S. Cl. 330—149 **3 Claims**

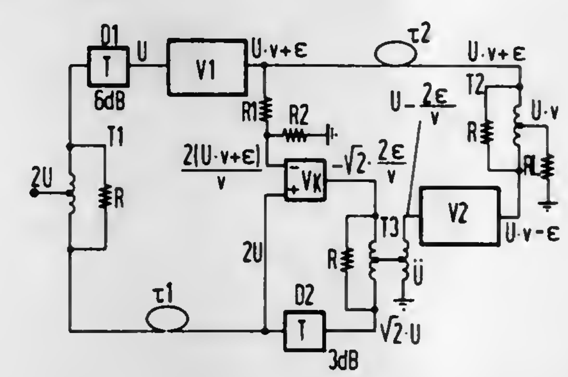

1. A transistor power amplifier for transmission systems, particularly in the short-wave range, comprising:

a power amplifier input, a power amplifier output, and first and second parallel-connected signal paths extending between said power amplifier input and said power amplifier output;

first amplifier means in said first signal path including an input coupled to said power amplifier input and an output, and having a first predetermined delay time and operable to subject input signals to an error;

second amplifier means in said second signal path including an input and an output and having a second predetermined delay time;

first delay means in said second signal path including an input coupled to said power amplifier input and an output, and operable to simulate said first predetermined delay time;

second delay means in said first signal path including an input connected to said output of said first amplifier means and an output, are operable to simulate said second predetermined delay time;

output means connecting said output of said second delay means and said output of said second amplifier means to said power amplifier output;

signal branching means connected to said output of said first amplifier means for providing a portion of the output signal of said first amplifier means;

correction amplifier means comprising a differential amplifier including first and second inputs and an output, said first input connected to said output of said first delay means, said second input connected to said signal branching means, and said differential amplifier operable to provide a correction signal which includes the error component produced in said first amplifier means inverted and of twice the magnitude thereof; and

signal combining means coupling said output of said first delay means and said output of said differential amplifier to said input of said second amplifier means, comprising a transformer including a primary winding coupled to said output of said first delay means and to said output of said differential amplifier and a secondary winding connected to said input of said second amplifier means.

4,061,985

LASER FUSION PULSE SHAPE CONTROLLER

Larry D. Siebert, Ann Arbor, Mich., assignor to KMS Fusion, Inc., Ann Arbor, Mich.

Filed Jan. 16, 1976, Ser. No. 649,864

Int. Cl.² H01S *3/10*

U.S. Cl. 331—94.5 C **7 Claims**

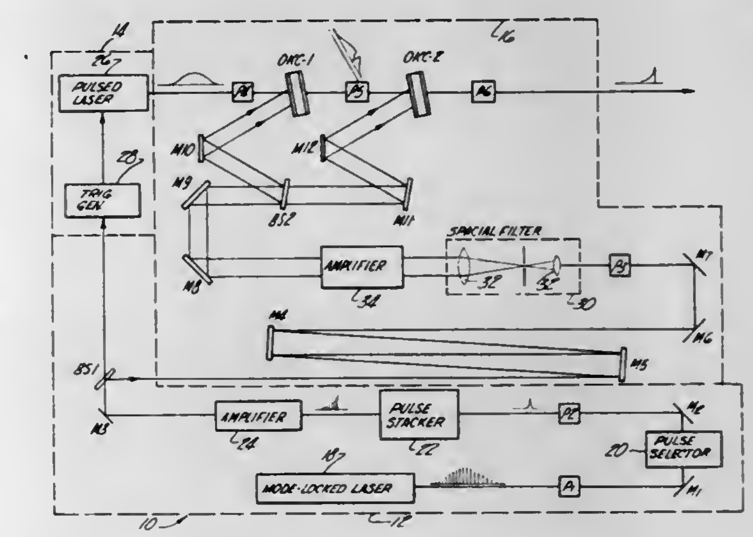

1. An optical pulse shape controller comprising a first energy source responsive to an optical trigger signal to generate a light beam, a Kerr-effect gate including at least one Kerr cell disposed at the output of said first source and responsive to an optical control signal to gate only a selected portion of said light beam, said selected portion being a function of the duration and intensity pattern of said optical control signal, a second source of pulsed light energy, and means disposed at the output of said second source and responsive to an output light pulse from said second source to provide said optical trigger signal and said optical control signal of preselected duration and intensity pattern.

4,061,986

SOFT POWER SUPPLY FOR PULSED LASER

Gerald C. Barker, Palo Alto, Calif., assignor to Coherent Radiation, Palo Alto, Calif.

Filed Jan. 2, 1976, Ser. No. 646,330

Int. Cl.² H01S *3/09, 3/097*

U.S. Cl. 331—94.5 PE **6 Claims**

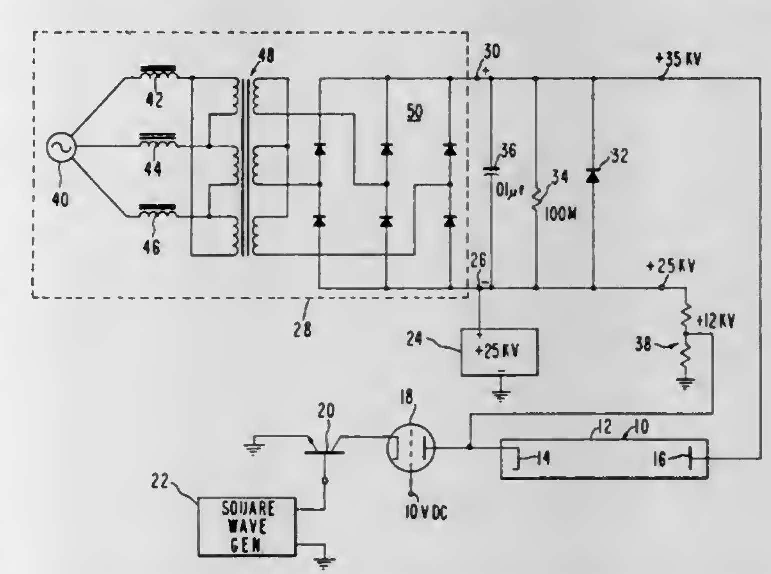

1. In combination, a laser discharge tube adapted for repetitive pulsed operation and having first and second electrodes

and containing a gas capable of being ionized by electrical discharge between the first and second electrodes, switching means for repetitively energizing said pulsed laser discharge tube at a predetermined frequency by selectively providing a current path through said discharge tube, a first direct current power supply, a second direct current, current limited power supply connected across the electrodes of the laser discharge tube and in series with the first power supply and the switching means, the second power supply including means for reducing its output to a minimal predetermined value when the current drawn from it is equal to the current drawn by the laser discharge tube when said gas within said tube is ionized during each pulsed energization of the discharge tube, and diode means connected in parallel with the output of the second power supply for bypassing the second power supply and conducting current from the first power supply to said laser discharge tube electrodes after the laser discharge tube gas is ionized to maintain the laser discharge tube in its ionized state, whereby the laser discharge tube may be repeatedly pulsed at its predetermined rate.

4,061,987
VOLTAGE-CONTROLLED TYPE OSCILLATOR
Yasuo Nagahama, Hamamatsu, Japan, assignor to Nippon Gakki Seizo Kabushiki Kaisha, Japan
Filed Feb. 22, 1977, Ser. No. 770,714
Claims priority, application Japan, Feb. 27, 1976, 51-23236[U]
Int. Cl.² H03K *3/282*
U.S. Cl. 331—111 **3 Claims**

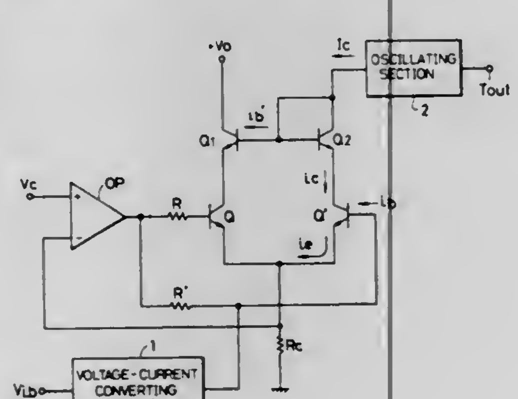

1. A voltage-controlled oscillator having a differential amplifier including a first and a second transistors base-biased equally by a voltage produced in response to an input control voltage, and an oscillating section connected to a collector of said second transistor for oscillating a signal having a frequency proportional to a collector current of said second transistors of said differential amplifier, comprising a *p-n* junction semiconductor element connected between the collector of said second transistors of said differential amplifier and said oscillating section, and a further transistor connected between the collector of said first transistor of said differential amplifier and a power source, current from said oscillating section being applied to the base of said further transistor.

4,061,988
HALL EFFECT LINEAR MOTION SWITCH
Raymond F. Lewandowski, Mount Prospect, Ill., assignor to Oak Industries Inc., Crystal Lake, Ill.
Filed Feb. 9, 1976, Ser. No. 656,106
Int. Cl.² H01L *43/04, 43/06*
U.S. Cl. 338—32 H **9 Claims**

1. In a contactless linear motion switch, a housing, a Hall effect sensing circuit positioned within said housing, a plunger positioned for movement in said housing, a permanent magnet carried by said plunger for movement toward and away from said Hall effect sensing circuit, and a concentrator fixed in position within said housing, said concentrator having a portion extending adjacent said Hall effect sensing circuit and a further portion positioned in contact with said magnet when

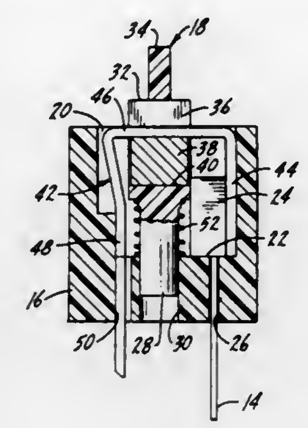

said magnet is positioned away from said Hall effect sensing circuit.

4,061,989
REDUNDANCY SWITCHING SYSTEM
Peter G. Petrelis, Huntington Beach, Calif., assignor to TRW Inc., Redondo Beach, Calif.
Filed Sept. 2, 1975, Ser. No. 609,852
Int. Cl.² H01P *1/10*
U.S. Cl. 333—7 R **12 Claims**

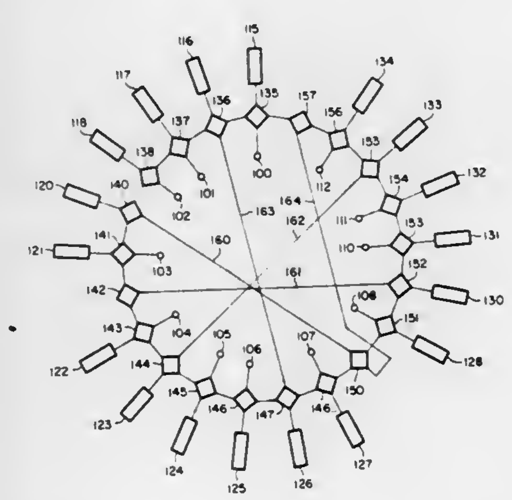

1. In a transponder for a communication system, a redundancy switching system comprising:
a. a first plurality of elements, said elements being identical;
b. a second plurality of terminals for transmitting or receiving a plurality of signals of different frequencies and representing different data, said second plurality being no more than said first plurality; and
c. switching means connected to each of said elements, said switching means being interconnected in a closed loop, some of said elements being standby elements, whereby upon failure of one of said elements a standby element is connectable by at least one of said switching means to one of said terminals.

4,061,990
FREQUENCY COMBINING CIRCUIT
Tomoki Ueno, Hirakata, Japan, assignor to Matsushita Electric Industrial Co., Ltd., Kadoma, Japan
Filed Oct. 26, 1976, Ser. No. 735,416
Claims priority, application Japan, Oct. 27, 1975, 50-129482
Int. Cl.² H01P *5/18*
U.S. Cl. 333—10 **5 Claims**

1. A frequency combining circuit in the form of a planar transmission circuit and operative in a selected frequency band, said frequency combining circuit comprising:
a four-port directional coupler having a coupler input port for receiving a first frequency signal in a first frequency band, a first coupler branch line coupled to said coupler input port, a coupler output port coupled to said first coupler branch line for receiving said first frequency signal from said coupler input port through said first coupler branch line, a coupler forward coupling port coupled to said first coupler branch line for receiving a portion of said first frequency signal, a second coupler branch line coupled to said coupler forward coupling port, and a coupler backward coupling port coupled to said second coupler branch line and also coupled to said first branch line;
a first transmission line coupled at one end thereof to said coupler backward coupling port;
first filter means coupled to the other end of said first transmission line for receiving a second frequency signal from a signal source, said second frequency signal being in a second frequency band separated from said first frequency band, said first filter means having a filtering property for rejecting said first frequency signal and passing therethrough said second frequency signal to said first transmission line and hence to said coupler backward coupling port, a portion of said second frequency signal being transferred to said coupler output port, and the other portion of said second frequency signal being transferred

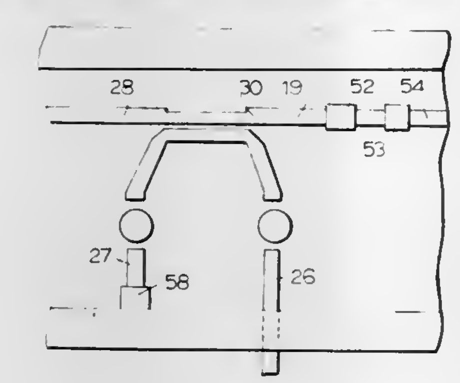

to said coupler forward coupling port through said second coupler branch line;
a second transmission line coupled at one end thereof to said coupler forward coupling port for passing therethrough to the other end thereof said portion of said first frequency signal from said coupler forward coupling port;
second filter means coupled to said other end of said second transmission line and having a filtering property for rejecting said first frequency signal and passing therethrough said second frequency signal; and
a load to which said second filter means is also coupled, said portion of said first frequency signal passed through said coupler forward coupling port and said second transmission line being rejected by said second filter means and being returned to said coupler forward coupling port through said second transmission line, and said other portion of said second frequency signal passed through said second coupler branch line, said coupler forward coupling port and said second transmission line being passed through said second filter means and being absorbed by said load, and the pass band of said frequency combining circuit for said first frequency signal being varied by varying the length of said first transmission line and the length of said second transmission line.

4,061,991
SEEDED FLAME MICROWAVE POWER LOAD
Michael A. Hamid, Winnipeg, and Lyall G. Rowlandson, Ottawa, both of Canada, assignors to Minister of Defense, Canadian Government, Canada
Filed Jan. 21, 1976, Ser. No. 650,956
Claims priority, application Canada, Jan. 28, 1975, 218838
Int. Cl.² H01P *1/24*
U.S. Cl. 333—22 R **16 Claims**

1. A microwave energy absorbing device, comprising:
a wave guide for guiding a microwave signal;
means for forming a flame across said wave guide; and

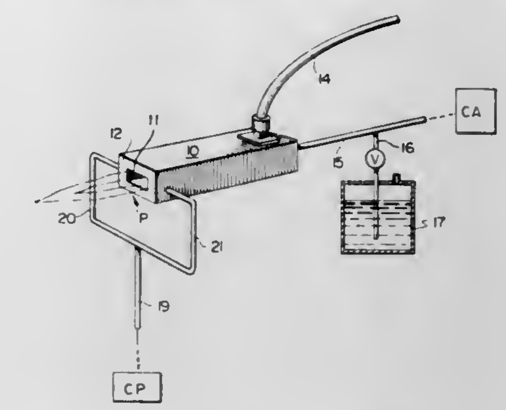

means for supplying a seeding substance to said flame to produce a plasma flame column for absorption of said microwave signal in said column.

4,061,992
HELICAL RESONATOR FILTER
Takahiro Inokuchi, Sakado, Japan, assignor to Toko, Inc., Tokyo, Japan
Filed Aug. 14, 1975, Ser. No. 604,885
Claims priority, application Japan, Aug. 21, 1974, 49-95978
Int. Cl.² H01P *5/04, 7/06;* **H03H** *7/10*
U.S. Cl. 333—73 R **1 Claim**

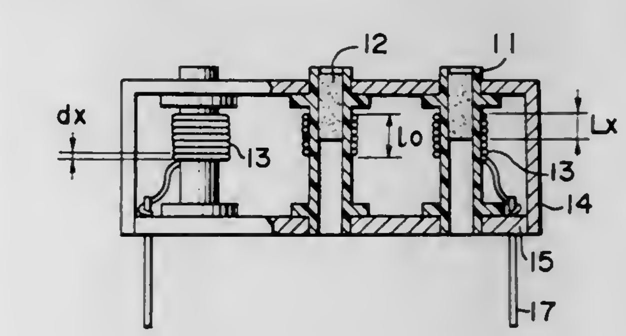

1. A helical resonator filter including hollow bobbins arranged on a base plate in predetermined spaced relationship with each other, helical resonators comprising helical coils each constituted by a wire-like member wound on said hollow bobbins respectively, said helical resonators being directly coupled without obstruction, magnetic cores adjustably inserted in said hollow bobbins, the improvement comprising means for adjusting the length of that portion of each helical coil which overlaps each associated magnetic core axially of said each helical coil, said means being arranged to provide the following relationship:

$$k \propto P \cdot F(L_x, dx)$$

where k is the coupling coefficient between the respective helical coils, dx is the diameter of said wire-like member constituting each of said helical coils, L_x is the length of that portion of each magnetic core which is inserted in or overlapped by each helical coil, and P is a constant, whereby desired electromagnetic coupling can be adjustably established between the respective helical coils via said magnetic cores.

4,061,993
TRIPPING DEVICE FOR PRE-SELECTION OF FUNCTION FOR ELECTRICAL EQUIPMENT
Jean Hennemann, Hombliere, France, assignor to Unelec S.A., Paris Cedex, France
Filed Mar. 1, 1976, Ser. No. 662,932
Claims priority, application France, Mar. 6, 1975, 75.06966
Int. Cl.² H01H 83/20
U.S. Cl. 335—20 10 Claims

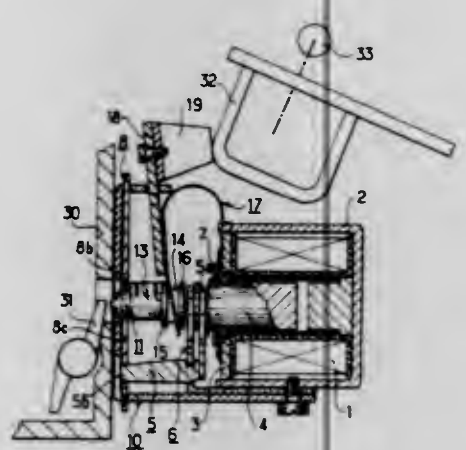

1. A tripping device having two selectable configurations comprising electromechanical control means having energized and deenergized states and including a mobile member having retracted and extended positions related to the state of the electromechanical control means, striker means operatively coupled to said mobile member for operating a circuit breaker depending upon the state of said electromechanical control means, displaceable locking means having a lock position for holding the striker means in a locked position, and coupling means between the mobile member and said locking means for displacing the locking means, upon change of energization state of the electromechanical control means, from said lock position to a release position in which the striker means can trip the circuit breaker, said electromechanical control means in one configuration of the tripping device going from energized to deenergized state and in a second configuration going from deenergized to energized state, said striker means including a projecting part forming a catch which engages with said locking means such that the striker means is held in locked position, said projecting part being movable between first and second positions, corresponding to the first and second configurations, in which said projecting part respectively engages said locking means with the latter in lock position and is released therefrom when the locking means moves to release position such that solely by moving the projecting part between said first and second positions the tripping device is placed into the selected configuration.

4,061,994
MINIATURE RELAY WITH BEARING SUPPORTS ASSOCIATED WITH THE HOUSING
Werner Minks, Reime-Siedlung, Germany, assignor to International Standard Electric Corporation, New York, N.Y.
Filed Apr. 8, 1976, Ser. No. 675,157
Claims priority, application Germany, Apr. 15, 1975, 2516502
Int. Cl.² H01H 9/02
U.S. Cl. 335—202 13 Claims

1. A relay structure comprising:
an electromagnet assembly including a coil about a generally central axial magnetic core piece and a yoke piece providing a pair of magnetic poles at a first end of said electromagnet assembly in the form of the generally flat ends of said yoke and core pieces, said yoke piece having an outer edge at said first end, and further being magnetically connected to said core at the second end of said electromagnet assembly;
a generally L-shaped armature piece placed at said first end with the vertex of its obtuse interior angle in contact with said yoke piece outer edge, a first leg of said armature being located so as to be magnetically pulled to said core piece thereby tilting said armature about said vertex;
a housing containing said electromagnet assembly and said armature piece;
and means comprising a pair of shoulder pieces located

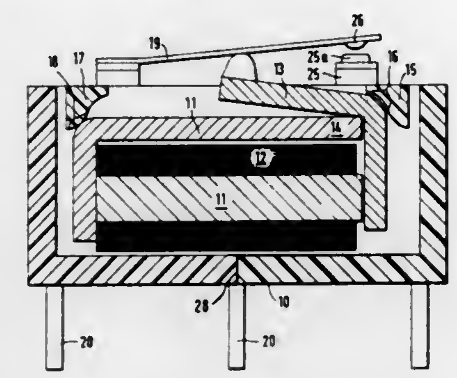

within said housing, one of said shoulder pieces bearing against the outside surface of said armature opposite said vertex and the other bearing against said yoke adjacent said second end, thereby to provide axial constraint for the assembly comprising said electromagnet assembly and said armature, and preservation of the relative axial positions of said yoke and said armature.

4,061,995
ODOGRAPH AND HEADING INDICATOR THEREFOR
John T. McCrickerd, 1857 Elba Circle, Costa Mesa, Calif. 92626
Filed Jan. 23, 1975, Ser. No. 543,391
Int. Cl.² G08G 1/12
U.S. Cl. 340—24 15 Claims

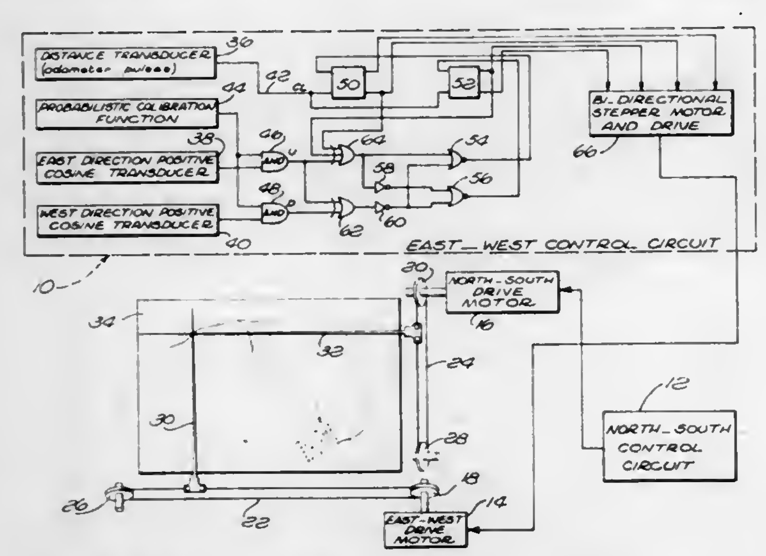

1. An odograph, comprising:
odometer means for generating first electrical signals in accordance with distance traveled by a vehicle;
a magnetic compass element having a support and a spherical surface pivoted on said support for rotative response to the earth's magnetism, and including a predetermined reflective surface portion having greater light reflectivity than remaining portions of said surface;
illumination means for directing light rays toward at least a portion of said spherical surface;
a plurality of lenses for focusing said light rays onto said spherical surface and movable to cause said light rays to simultaneously traverse said spherical surface along a plurality of paths for coincidence with said reflective surface portion;
means for sensing said coincident light rays and generating a second electrical signal in correspondence thereto;
means for moving said lens means along a path respective said compass element whereby the extent of said second electrical signal generated as a result of said coincidence corresponds to the heading of said vehicle; and

position indicator means responsive to coincidence of said first and second electrial signals to indicate the location of said vehicle.

4,061,996
STATUS MONITORING APPARATUS FOR BLC SYSTEMS
Alankar Gupta, Renton, Wash., and Delmar M. Fadden, Hampton, Va., assignors to The Boeing Company, Seattle, Wash.
Filed Oct. 28, 1975, Ser. No. 626,049
Int. Cl.² G08B 29/00
U.S. Cl. 340—27 R 6 Claims

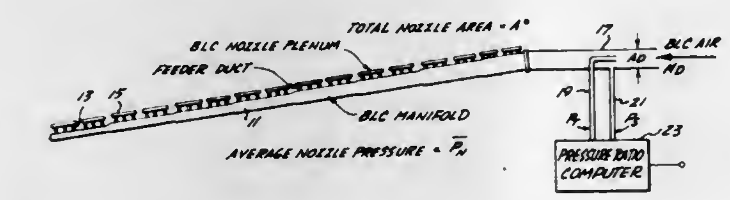

1. In an aircraft Boundary Layer Control (BLC) system wherein engine bleed air is ducted to an air delivery and momentum injection subsystem including a BLC manifold for receiving said engine bleed air and BLC nozzle plenums connected to the manifold for directing the bleed air from the manifold to predetermined regions of a wing of the aircraft, the improvement comprising:
monitoring means for monitoring the flow of engine bleed air to said BLC manifold to detect failures in said air delivery and momentum injection subsystem of said BLC system, said monitoring means monitoring an air flow parameter of the bleed air at the air inlet of said BLC manifold.

4,061,997
CIRCUIT ARRANGEMENT FOR THE RECEPTION OF DATA
Dieter Niethammer, and Werner Paetsch, both of Munich, Germany, assignors to Siemens Aktiengesellschaft, Munich, Germany
Filed Nov. 18, 1975, Ser. No. 632,911
Claims priority, application Germany, Nov. 20, 1974, 2455028
Int. Cl.² G06F 11/00
U.S. Cl. 340—146.1 AX 6 Claims

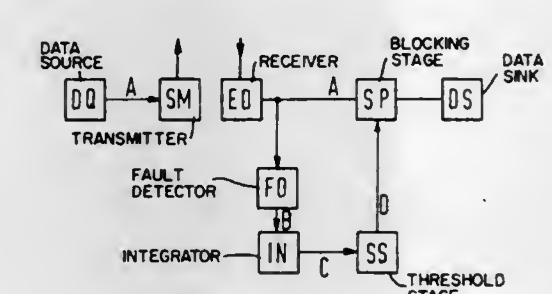

1. A circuit arrangement for preventing reception of faulty data transmitted from a data source to a data sink in a data transmission system having a fault discriminator which emits a fault signal when there is a fault in the data signal, comprising:
integrating means for receiving said fault signal and producing therefrom an integrated fault signal,
threshold signal means for producing a blocking signal when said integrated fault signal reaches or exceeds a predetermined value, and
blocking means responsive to said blocking signal for blocking the processing of said data in said data sink.

4,061,998
CHARACTER RECOGNITION EQUIPMENT
Chiaki Ito, Yokohama, Japan, assignor to Fujitsu Limited, Kawasaki, Japan
Filed July 20, 1976, Ser. No. 707,115
Claims priority, application Japan, July 26, 1975, 50-91789
Int. Cl.² G06K 9/12
U.S. Cl. 340—146.3 AC 5 Claims

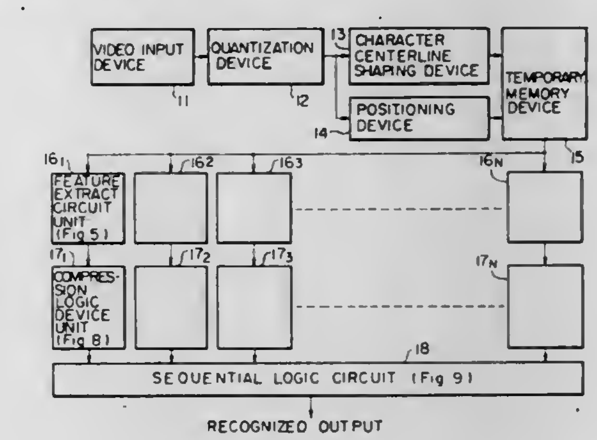

1. A character recognition system comprising:
a video input device which obtains character video signals by raster scanning characters which exist on a medium;
a quantization unit which converts said character video signals into binary code video signals;
a character centerline shaping device which transforms said binary code video signals into character centerline figures;
a temporary memory device which temporarily stores said character centerline figures;
a feature extract device which divides said character centerline figures in said temporary memory device into divided regions with lines, said lines being in the scanning direction or being at right angles wiith respect to said scanning direction, said divided regions being composed of columns having *n* bits which device takes out every column of partial centerline figures in said divided regions, said solumn being at a right angle with respect to said lines, and which device extracts the positions of a start point of said partial centerline figures in every divided region, positions of end points of said partial centerline figures in said every divided region, and displacements of said partial centerline figures from said start points to said end points, and;
a sequential logic circuit which decides the categories of the character based on a sequence of the outputs of said feature extract device.

4,061,999
DYNAMIC RANDOM ACCESS MEMORY SYSTEM
Robert J. Proebsting, Richardson, and Paul R. Schroeder, Dallas, both of Tex., assignors to Mostek Corporation, Carrollton, Tex.
Filed Dec. 29, 1975, Ser. No. 644,857
Int. Cl.² G11C 11/40
U.S. Cl. 365—182 20 Claims

1. The dynamic random access memory comprising an integrated MOSFET circuit including:
a plurality of storage cells arrayed in rows and columns,
a sense amplifier for each column,
a true digit line and a complement digit line for each sense amplifier, the storage cells in each column being connected to at least one of the respective digit lines when the respective storage cells are enabled by a row enable signal;
row enable means for each row for enabling the storage cells in the respective rows by transferring data stored therein to the digit lines for the respective columns;
each sense amplifier having true and complement input nodes each having a relatively small capacitance value when compared to the capacitance value of the respective true and complement digit lines, each amplifier including

a first transistor connecting the true input node to a latch node and a second transistor connecting the complement input node to the latch node, the gate of the first transistor being part of the complement input node and the gate of the second transistor being part of the true input node;
first impedance means connecting the true digit line to the true input node, and second impedance means connecting the complement digit line to the complement input node;
latch node control means for maintaining a precharge on the latch node and then discharging the precharge on the latch node;

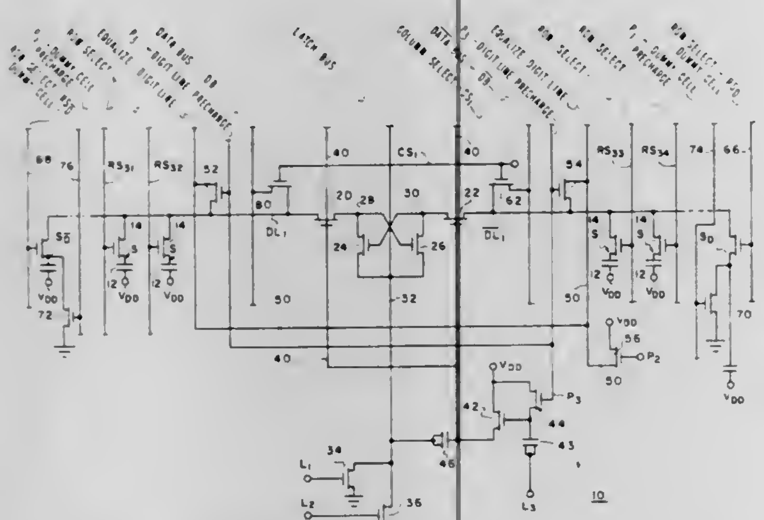

digit line precharge means for precharging the digit lines such that substantially the same precharge voltage level is on both true and complement digit lines; and
control circuit means for sequentially producing a row enable signal for the storage cells in a selected row to connect the storage cells in the selected row to the respective digit lines and then causing the latch node control means to discharge the latch node whereby one of the digit lines will be discharged and the other not significantly discharged.

4,062,000
CURRENT SENSE AMP FOR STATIC MEMORY CELL
Robert Murray Donnelly, Carrollton, Tex., assignor to Mostek Corporation, Carrollton, Tex.
Continuation of Ser. No. 511,572, Oct. 3, 1974, Pat. No. 3,967,252. This application Jan. 30, 1976, Ser. No. 654,013
Int. Cl.[2] G11C *7/00, 7/06*
U.S. Cl. 365—203 **1 Claim**

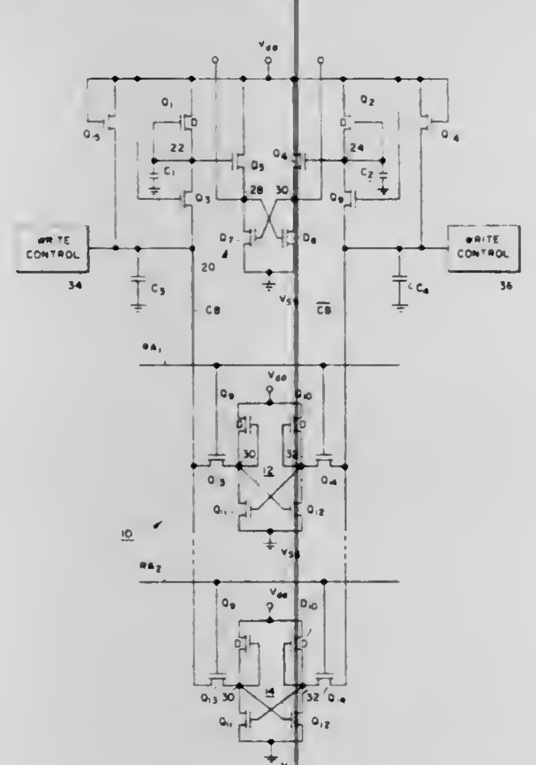

1. The method for reading data from a static memory cell of an integrated circuit memory having a d.c. current path from a sense bus to a source supply voltage means when addressed representing one logic state which comprises
precharging the sense bus from a voltage source through a field effect transistor to a predetermined voltage level, then
addressing the memory cell to initiate the d.c. current path, and
detecting the current flow through the sense bus as an indication of the logic state of the cell before the voltage of the sense bus has been substantially reduced.

4,062,001
DYNAMIC CONTENT ADDRESSABLE SEMICONDUCTOR MEMORY
Roger Thomas Baker, Box 240, Mount Tabor, N.J. 07878
Filed Aug. 12, 1976, Ser. No. 713,687
Int. Cl.[2] G11C *11/40*
U.S. Cl. 365—49 **6 Claims**

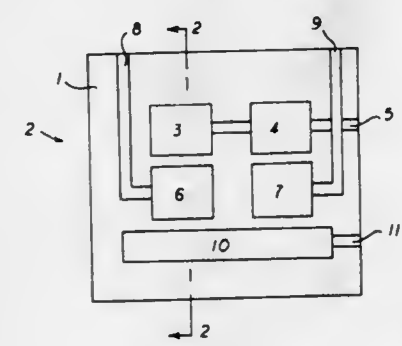

1. A method of operating a semiconductor memory cell, comprised of the steps of
utilizing a first electrode in proximity to a semiconducting substrate to form in said semiconducting substrate, a first potential well for mobile charge carriers of one polarity,
utilizing a second electrode in proximity to said semiconducting substrate to form in said semiconducting substrate, a second potential well for mobile charge carriers of said polarity,
storing binary datum in said memory cell by
representing a zero in said memory cell by maintaining a relatively large number of mobile charge carriers of said polarity in said first potential well, and maintaining a relatively small number of mobile charge carriers of said polarity in said second potential well,
representing a one in said memory cell by maintaining a relatively large number of mobile charge carriers of said polarity in said second potential well and maintaining a relatively small number of mobile charge carriers of said polarity in said first potential well,
determining if the binary datum stored in the said memory cell is the same as or different from a given datum by,
if the said given datum is a zero, operating on the said second potential well such that some of any mobile charge carriers of said polarity stored in said second potential well are extracted therefrom, while maintaining the number of mobile charge carriers of said polarity stored in said first potential well, substantially unchanged,
if the said given datum is a one, operating on the said first potential well such that some of any mobile charge carriers of said polarity stored in said first potential well are extracted therefrom, while maintaining the number of mobile charge carriers of said polarity stored in said second potential well, substantially unchanged.

4,062,002
DEVICE FOR BIASING BUBBLE DOMAINS
David Malcolm Hannon, Palo Alto, and Hung Liang Hu, Sunnyvale, both of Calif., assignors to International Business Machines Corporation, Armonk, N.Y.
Filed Nov. 1, 1976, Ser. No. 737,881
Int. Cl.[2] G11C *19/08*
U.S. Cl. 365—27 **10 Claims**

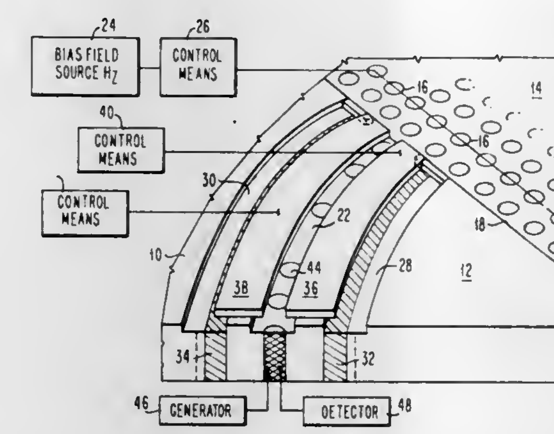

1. A device having a film of bubble material on a substrate and adapted for the use in an external bias field between 0 and 0.4 ($4\pi M_s$) comprising:
a first channel in said film having a first stripe domain therein, said first channel being of sufficient width to permit said first stripe domain to expand in width when said external bias field is lowered wherein the flux from said first stripe increases to counteract the effect of the lower external bias field,
a second channel in said film having a second stripe domain therein, said second channel being parallel to said first channel, said second channel being of sufficient width to permit said second stripe domain to expand in width when said external bias field is lowered wherein the flux from said second stripe increases to counteract the effect of the lower external bias field,
a third channel in said film positioned between said first channel and said second channel and adapted for the movement of a bubble there-through,
a first conductor in juxtaposition with said first channel and said third channel and adapted for the current therein to flow in a first direction, said first conductor fixing the position of said first stripe domain in said first channel and causing said first stripe domain to expand in width in said first channel, and
a second conductor in juxtaposition with said second channel and said third channel and adapted for the current therein to flow in a direction opposite said first direction, said second conductor fixing the position of said second stripe domain in said second channel and causing said second stripe domain to expand in width in said second channel, wherein the passage of current through said first and second conductors and the presence of said first and second stripe domains provide a biasing field around said third channel to increase the operating margin of said device.

4,062,003
ONE-LEVEL MAGNETIC BUBBLE SWITCHING DEVICE
Peter K. George, Placentia, Calif., assignor to Rockwell International Corporation, El Segundo, Calif.
Filed July 30, 1976, Ser. No. 709,989
Int. Cl.[2] G11C *19/08*
U.S. Cl. 365—16 **4 Claims**

1. A one-level transfer switch for use with magnetic bubble domains comprising
a first propagation path comprising at least one column of chevrons,
a second propagation path comprising at least two columns of chevrons,
all of the columns of chevrons having the apices thereof pointing in the same direction,
the apices of said one column of chevrons aligned with the gap between said at least two columns of chevrons, and
a pair of substantially parallel conductor elements arranged

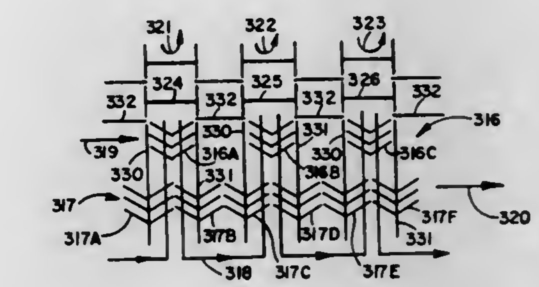

on opposite sides of the apices of the chevrons in said one column and said gap between said at least two columns of chevrons,
said pair of conductor elements joined together at one end thereof by means of at least one chevron in said one column.

4,062,004
DUAL RANGE, TORQUE REBALANCING OF INERTIAL SENSOR
James P. Roantree, West Hartford, and Glenn A. Swartzentruber, Simsbury, both of Conn., assignors to United Technologies Corporation, Hartford, Conn.
Filed Mar. 2, 1976, Ser. No. 663,175
Int. Cl.[2] G08C *19/02*
U.S. Cl. 340—187 **7 Claims**

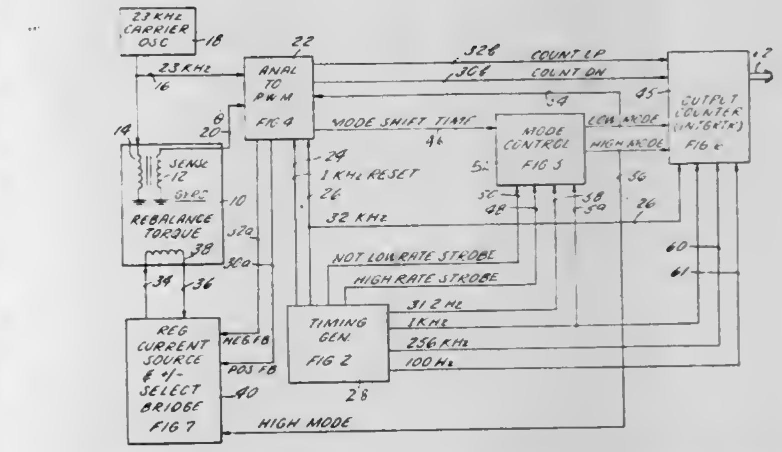

5. Apparatus for use with a torque rebalanced inertial sensor having a torque rebalance winding which restores the position of the sensor against inertial forces acting thereon in response to currents applied thereto, and providing an output signal indicative of inertial changes being sensed thereby, comprising:
timing means providing a plurality of related, cyclic timing signals, including first and second timing signals, said first timing signals having a frequency which is an integral multiple of said second timing signals;
mode control means settable into either one of two stable states and presenting either a high rate mode signal or a low rate mode signal, alternatively, for respectively designating a high rate sensing mode or a low rate sensing mode;
converter means responsive to the output signal of the inertial sensor for providing a signal manifestation of the direction and the magnitude of the inertial changes being sensed thereby;
an up/down counter;
means responsive to said timing means, said converter means, and said mode control means to apply to said up/down counter either said first timing signals in response to said high rate mode signal or said second timing

signals in response to said low rate mode signal, to count said counter up or down in respective dependence on said signal manifestation of said converter means;

feedback current means responsive to said mode control means and said converter means operable to alternatively provide negative feedback current of either a first magnitude or a second magnitude depending on said mode signals, said first magnitude being said integral multiple of said second magnitude, in either of two polarities in dependence on said signal manifestation of said converter means, to the torque rebalance winding of the inertial sensor; and

means responsive to said converter means for setting said mode control means into one of said states.

4,062,005
SYNCHRO-TO-DIGITAL CONVERTER EMPLOYING COMMON PROCESSING APPARATUS
Gerald Lewis Freed, Highland Park, and David S. Lerner, Fanwood, both of N.J., assignors to Lockheed Electronics Co., Inc., Plainfield, N.J.
Filed Nov. 4, 1975, Ser. No. 628,471
Int. Cl.² G08C *19/38*
U.S. Cl. 340—198 **12 Claims**

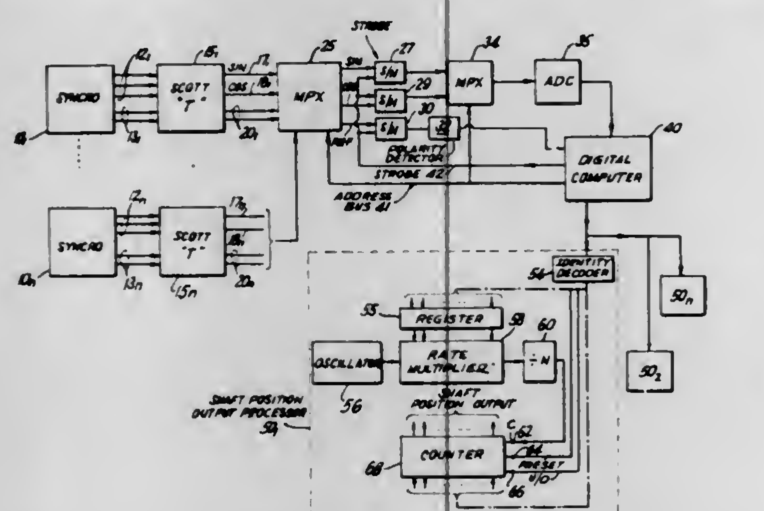

10. In combination in apparatus for providing digital measures of the orientation of a plurality of rotatable shafts, plural shaft position output processor means each for reporting the current position of an associated shaft, said shaft position outputting processor means each including a programmable variable frequency oscillator and a counter connected to the output of said variable frequency oscillator, plural shaft position monitoring means, sampling shaft movement determining means sequentially connected to said plural shaft position monitoring means for controlling the variable frequency oscillator associated with each shaft to perform at a frequency proportional to the rotational rate of that shaft, wherein said programmable variable frequency oscillator in each of said output processing means includes a rate multiplier and pulse source connected to said rate multiplier.

4,062,006
COMBUSTION MONITORING SYSTEM
Fredrick S. Solheim, 555 Arapahoe, and Lee A. Erb, 3565 Catalpa Way, both of Boulder, Colo. 80302
Filed Apr. 26, 1976, Ser. No. 680,023
Int. Cl.² G08B *21/00*
U.S. Cl. 340—228 R **8 Claims**

1. A monitoring system for sensing the combustion state of a combustion chamber of a cloud seeding generator, said monitoring system comprising:

sensing means positioned adjacent to said combustion chamber of said cloud seeding generator and producing an electrical output signal indicative of a predetermined state thereof;

signal processing means for receiving said electrical output signal from said sensing means and providing an output when said signal from said sensing means exceeds a predetermined value;

indicating means connected with said signal processing means to receive the output therefrom and responsive

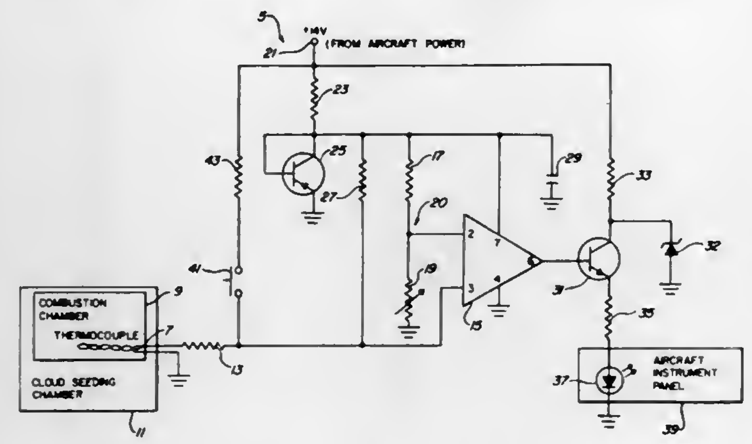

thereto providing an indication of the combustion state of said combustion chamber of said cloud seeding generator; and

testing means connected with said signal processing means for verifying that said system is operable.

4,062,007
SOLID-STATE DELAY TIMED SWITCHING CIRCUIT
Charles E. Scott, Noblesville, Ind., assignor to P. R. Mallory & Co. Inc., Indianapolis, Ind.
Filed Sept. 17, 1976, Ser. No. 724,346
Int. Cl. G08B *1/00*
U.S. Cl. 340—309.1 **11 Claims**

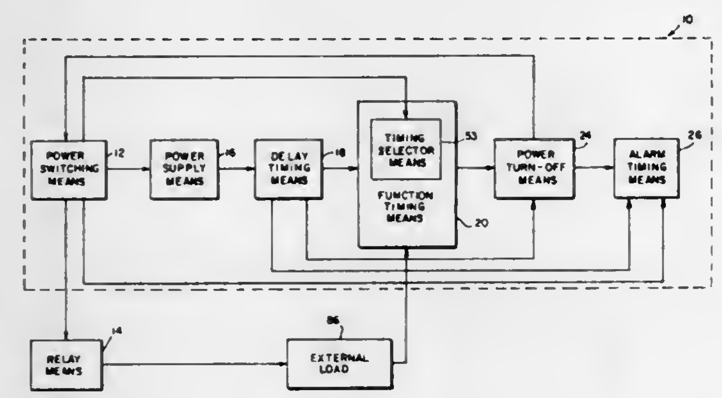

1. A solid-state delay timed switching circuit comprising, in combination:

a. a power switching means,

b. a power supply means responsive to said power switching means,

c. a single delay timing means electrically coupled to said power supply means for providing a time delay before the start of an operational sequence of functions which includes a first bi-directional semiconductor switch,

d. a function timing means responsive to said delay timing means for timing an operational sequence of functions for predetermined times,

e. a power turn-off means directly responsive to said function timing means for de-energizing said power switching means at the conclusion of the timing cycle of said function timing means which includes a second bi-directional semiconductor switch, and

f. an alarm timing means responsive to said power turn-off means providing an audible alarm at the conclusion of the timing cycle said function timing means for a predetermined time.

4,062,008
SYSTEM FOR SELECTIVE DETECTION AND INDICATION OF IMPACTS UPON A BASE SURFACE
Carl-Eric Waldenburg Carlsson, Eslov, and Göran Solve Holmstedt, Lund, both of Sweden, assignors to Nils Jeppson, Eslov, Sweden
Filed Feb. 9, 1976, Ser. No. 656,684
Int. Cl.² G08B *21/00*
U.S. Cl. 340—323 R **4 Claims**

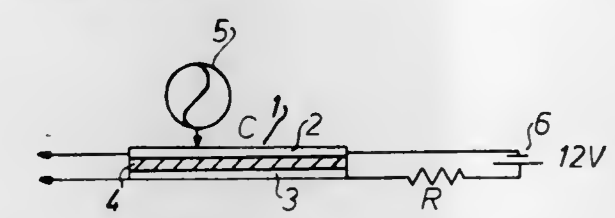

1. A system for selectively detecting and indicating momentary impacts on a base surface, said system comprising at least one detector unit and at least one indicator unit, wherein said detector unit comprises one or more capacitors between the plates of which an elastic material is inserted, the distance between said capacitor plates as well as the dynamic spring rate of the elastic material being adjusted to the type of impact to be detected and to the nature of the base surface, said detector unit being connected to a voltage source via a resistor having a sufficiently high resistance such that the charge on said one or more capacitors remains substantially constant during the duration of the impacts to be detected, and said indicator unit comprises an amplifier connected to the detector unit in such a way that each capacitor in the detector unit actuates the indicator unit, said amplifier amplifying pulses from the detector unit, and a switching means which is connected to the output of the amplifier and which, upon receipt of a pulse from the amplifier, delivers a signal to at least one indicator means for a desired time.

4,062,009
ELECTROPHORETIC DISPLAY DEVICE
Yvan Raverdy, and Jean Luc Ploix, both of Paris, France, assignors to Thomson-CSF, Paris, France
Filed July 13, 1976, Ser. No. 704,905
Claims priority, application France, July 17, 1975, 75.22353
Int. Cl.² G06F *3/14;* **G09F** *9/32*
U.S. Cl. 340—324 R **14 Claims**

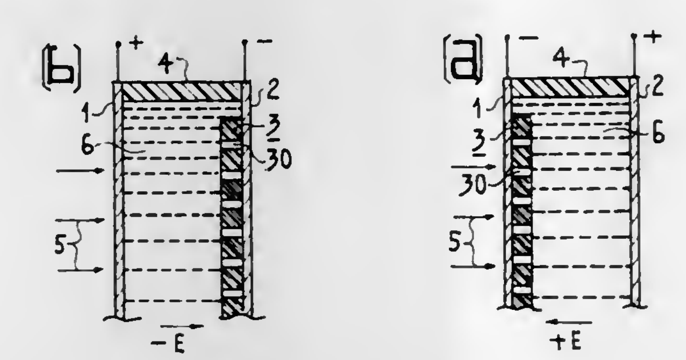

1. A display device using electrophoresis, comprising two substrates, a front substrate disposed towards incident light and a back substrate, said substrates carrying electrodes, at least said front substrate and its electrodes being transparent, said substrates being substantially parallel and attached together in order to form a closed vessel filled with a resistive fluid; said display device further comprising a thin electrophoretically displaceable diaphragm arranged in said vessel and permeable to said fluid, said diaphragm being capable of scattering the incident light in a colour differing from that of said fluid; means for applying a potential difference between at least one electrode on said front substrate and at least one electrode on said back substrate, thus developing an electric field between said substrates thereby making at least part of the diaphragm to apply on one of the two substrates in accordance with the direction of said electric field, said incident light being scattered when said diaphragm is applied on said front substrate, and being substantially absorbed by said fluid when said diaphragm is applied on said back substrate.

4,062,010
UNDERGROUND PIPE DETECTOR
Jonathan D. Young, Worthington, and Ross Caldecott, Columbus, both of Ohio, assignors to The Ohio State University, Columbus, Ohio
Division of Ser. No. 665,924, March 11, 1976, Pat. No. 4,028,707, which is a continuation-in-part of Ser. No. 437,927, Jan. 30, 1974, Pat. No. 3,967,282. This application Mar. 7, 1977, Ser. No. 775,383
The portion of the term of this patent subsequent to June 7, 1994, has been disclaimed.
Int. Cl.² H01Q *1/04, 21/26*
U.S. Cl. 343—5 NA **7 Claims**

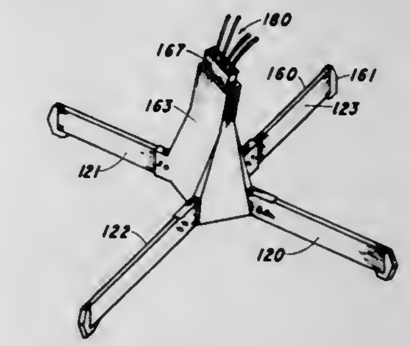

1. In a system for detecting and identifying targets situate beneath the surface of the ground where generating means serves to generate discrete pulses of short duration for effecting broad spectrum electromagnetic radiation and apply said pulses through input terminals to antenna means, said system further including means including output terminals for receiving and operating, in time domain fashion, upon pulse reflection detected by said antenna means, the improvement comprising:

a composite antenna including:

a pair of axially aligned oppositely extending nonresonant transmitting arms, each said arm being electrically coupled with the feed component of a said input terminal;

a second pair of axially aligned oppositely extending nonresonant receiving arms, each said arm being electrically coupled with the feed component of a said output terminal, said second pair of arms being arranged in orthogonal axial relationship with the axis of said transmitting arms;

each said pair of transmitting and receiving arms being configured having wave energy absorbing characteristics minimizing pulse reflection developed within said antenna, and each said arm thereof extending from a respective said feed component coupling to terminate in symmetry at a common mutual connection; and

said composite antenna being configured to operate at locations closely proximate the said ground surface to enhance the coupling of electromagnetic energy between said antenna and the ground.

4,062,011
MTI SYSTEM PROCESSOR AND METHOD
Glenn W. Preston, Rosemont, Pa.; Walter H. Chudleigh, Jr., Golden Valley, Minn., and William G. Ehrich, Geneva, Switzerland, assignors to Control Data Corporation, Minneapolis, Minn.
Filed Aug. 21, 1972, Ser. No. 282,073
Int. Cl.² G01S *9/42*
U.S. Cl. 343—7 A **11 Claims**

1. An MTI system comprising:

a source of pulse radar return signals;

an indicator;

a signal processor for processing the radar return signals

from said source, said processor including in-phase and quadrature channels each having a blanking gate operative when enabled to apply the processed radar signals to said indicator;

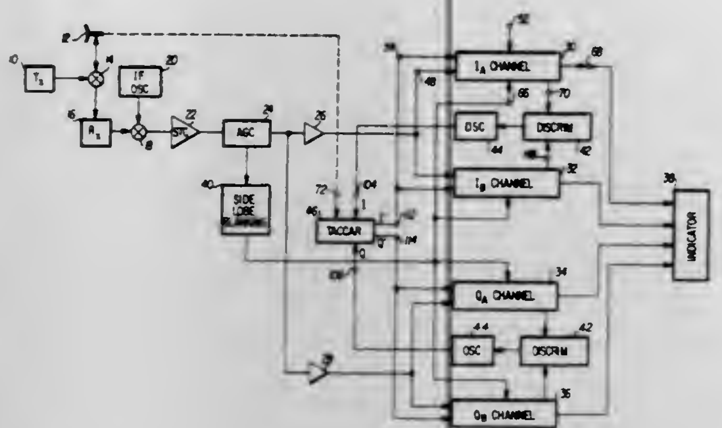

a blanking circuit responsive to the radar return signals from said source for controlling the enabling of said blanking gates; and,

means including a resolver and a vector rotator for substantially removing the effects of radar platform from the radar return signals applied to said blanking gates.

4,062,012
DIGITAL RADAR SIGNAL PROCESSOR

Richard P. Colbert, East Meadow; George Dimitriou, East Northport; Max E. Jones, Northport, and Jack I. Haberman, Plainview, all of N.Y., assignors to The United States of America as represented by the Secretary of the Navy, Washington, D.C.

Continuation-in-part of Ser. No. 487,513, July 11, 1974, abandoned. This application Apr. 30, 1976, Ser. No. 681,997

Int. Cl.² G01S *9/14*

U.S. Cl. 343—7 A **9 Claims**

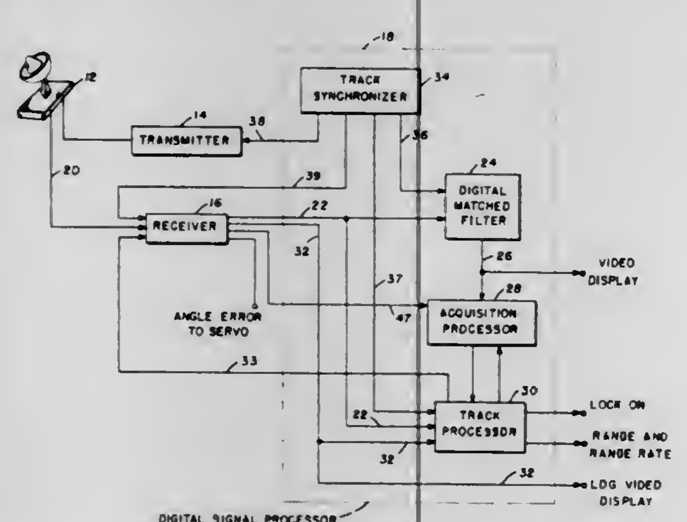

1. A digital signal processor for use with a radar receiver, comprising:

an adaptive constant false alarm threshold loop connected to receive signal returns from said radar receiver for producing a signal indicative of a target,

memory means connected to receive said signal indicative of a target for storing said signal and updating said signal in accordance with successive signals indicative of a target and producing a digital word indicative of said target,

an adaptive background average threshold loop connected to receive said digital word indicative of said target for comparing said word with selected words which precede and follow said word in time and for producing an output signal declaring a target if said word exceeds said selected words,

a track signal processor having a first input connected to a track loop signal and a second input connected to receive said output signal from said adaptive background average threshold loop for providing digital range and velocity signals, and

an error word generator connected to receive said digital range and velocity signals from said track signal processor for producing an error word signal which is fed back to said first input of said track signal processor for closing a track signal loop.

4,062,013
NON-LINEAR TYPE DIGITAL-TO-ANALOG CONVERTER

Yasuo Nagahama, Hamamatsu, Japan, assignor to Nippon Gakki Seizo Kabushiki Kaisha, Japan

Filed Oct. 20, 1975, Ser. No. 624,187

Claims priority, application Japan, Oct. 24, 1974, 49-121957

Int. Cl.² H03K *13/02*

U.S. Cl. 340—347 DA **5 Claims**

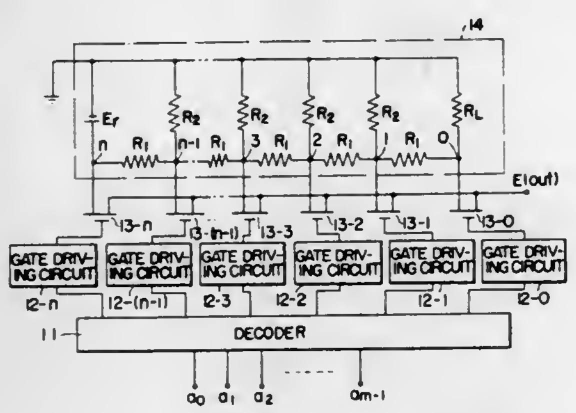

1. A non-linear type digital-to-analog converter for producing an exponential function output having, as its exponent, a value corresponding to an input digital signal applied thereto, comprising

a. decoder means, having a plurality of inputs for receiving digital input signals and individual output ports for developing individual output signals, for decoding said digital input signal to develop an individual output signal corresponding to an applied digital input signal;

b. exponential function generating means, comprising a DC voltage source having a grounded terminal and an ungrounded terminal, a series circuit of first resistors having the same resistance value R_1 and connected in series to define connecting nodes equal to the number of individual outputs of said decoder means between respective pairs of said first resistors, wherein one end of said series circuit is connected to said ungrounded terminal, second resistors having the same resistance valve R_2 wherein each of said second resistors is connected between a respective connecting node of said series circuit and ground, and a third resistor having a resistance value R_L connected between another end of said series circuit and ground, wherein said first second and third resistors having values satisfying the equation $R_2 = R_L(1+(R_L/R_1))$ for providing at respective ones of said connecting nodes analog outputs of stepwise exponentially differing values; and

c. control switching means including a common output terminal and comprising a plurality of control switching circuits connected respectively to said connecting nodes of said exponential function generating means and to said individual outputs of the decoder so that, in response to an individual analog output of said decoder means, said analog outputs provided at said output points of said exponential function generating means are selectively applied to said common output terminal in accordance with the applied digital input signal.

4,062,014
NATURAL BINARY TO LOGARITHMIC BINARY CONVERSION DEVICE WITH MEANS FOR RANGE SELECTION

Ulf Rothgordt, Norderstedt; Bernd Ehlers, Tornesch; Ernst Bunge, Hamburg, and Herbert Piotrowski, Kaltenkirchen, all of Germany, assignors to U.S. Philips Corporation, New York, N.Y.

Filed Jan. 30, 1976, Ser. No. 653,922

Claims priority, application Germany, Feb. 8, 1975, 2505388

Int. Cl.² H03K *13/24*

U.S. Cl. 340—347 DD **1 Claim**

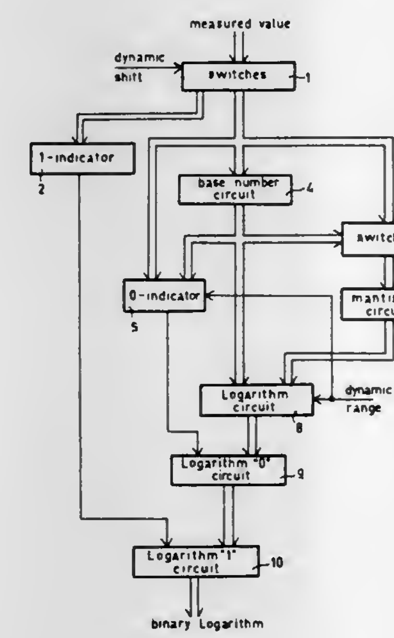

1. A device comprising

an input for supplying a binary number to be converted into a binary logarithm;

switch means having a control input for shifting the input number in parallel a predetermined number of bit positions, and having a binary valued output;

a 1-indicator connected to the output of said switch means for producing a signal if at least one bit on said output of said switch means has a "1" value;

a base number circuit connected to the output of said switch means for forming the base number of said binary number, and having an output;

a mantissa circuit connected to the output of said switch means for forming the mantissa of said binary number, and having an output;

a 0-indicator connected to the output of said switch means for producing a signal if all bits of said base number have a "0"-value, and the bit of the least significant position of the dynamic range also has the value "0";

a logarithm circuit, connected to the output of said base number circuit and said mantissa circuit for selecting the magnitude of the dynamic range, the output of the least significant position of the base circuit directly adjoining the output for the most significant position of the mantissa circuit, and having an output representing the binary logarithm;

a logarithm 0-circuit connected to the output of said logarithm circuit and said 0-indicator for producing a 0-value binary number output when the 0-indicator indicates that the base number has the value "0"; and

a logarithm 1-circuit connected to the output of said 0-circuit and said 1-indicator for producing a binary number with the value "1" in each bit position if the 1-indicator indicates a 1-value.

4,062,015
RAPID AZIMUTHAL DETERMINATION OF RADIO SIGNALS

John Litva, 256 Union Street, Almonte, Ontario, Canada (K0A 2C0), and Everett Earle Stevens, 113 Marina Drive, Manotick, Ontario, Canada

Filed Jan. 30, 1976, Ser. No. 654,018

Claims priority, application Canada, Jan. 30, 1975, 219067

Int. Cl.² G01S *3/20, 3/58*

U.S. Cl. 343—120 **7 Claims**

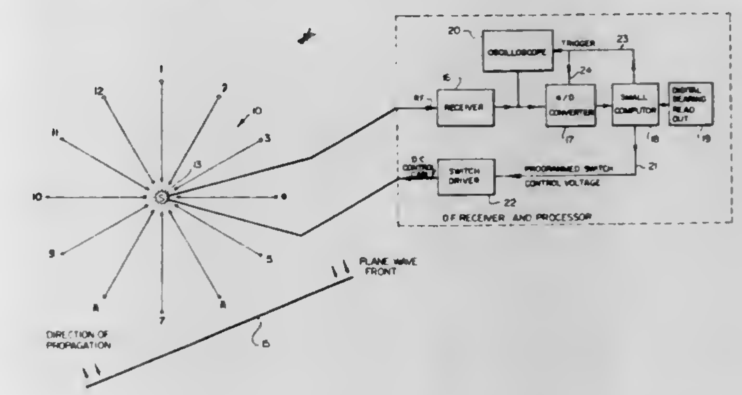

1. A method of determining the bearing of a radio signal comprising sequentially scanning, in a time period short compared to the typical fading period of an HF signal, a plurality of directional antennas arranged in a rosette array to determine which antenna is receiving the largest amplitude signal which indicates the approximate bearing of the radio signal, and making comparisons of said largest amplitude signal with the signal amplitudes of two adjacent antennas in the array, said signal comparisons being indicative of the amount and direction that the bearing of the radio signal differs from said approximate bearing.

4,062,016
SIMULTANEOUS TELECOMMUNICATION BETWEEN RADIO STATIONS

Katsutaka Kotezawa; Toshimi Onodera; Setsuo Hayashi, and Fujio Shimanuki, all of Funabashi, Japan, assignors to Chiba Communications Industries, Inc., Japan

Filed Jan. 5, 1976, Ser. No. 646,475

Claims priority, application Japan, Jan. 11, 1975, 50-16272; Feb. 14, 1975, 50-17087

Int. Cl.² H04B *1/56*

U.S. Cl. 343—178 **14 Claims**

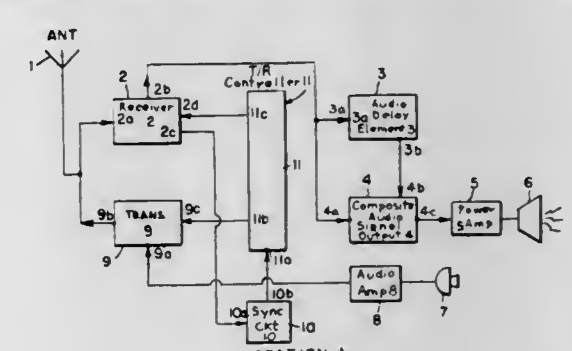

14. In a radio communication system for effecting simultaneous telecommunication between a first and a second station each including a transmitter and a receiver and using a carrier of a single frequency which carries audio signals, at least one of said stations comprising first means for providing a pulse train comprised of a series of time division pulse signals, each of which pulse signals occurs in a predetermined time interval, said pulse signals of said pulse train having a repetition frequency which is within the audio frequency range, controller means for enabling said receiver to output the audio signals received during the interval of certain ones of said pulse signals in said series, output means for said receiver over which said audio signals are provided, delay means connected to said output means for delaying said audio signals for one time

interval, and composite signal means connected to said output means and said delay means for providing a composite signal comprised of the audio signals output by said receiver in one time interval followed by the same audio signals as delayed by said delay means, whereby two sets of identical audio signals appear successively as a composite signal, and means for coupling said composite signal to audio reproducing means for reproduction purposes.

4,062,017
MULTIPLE FREQUENCY BAND ANTENNA
Wallace T. Thompson, 10528 Tomwood Ave., El Paso, Tex. 79925
Filed Nov. 20, 1975, Ser. No. 633,928
Int. Cl.² H01Q *1/14, 21/28*
U.S. Cl. 343—722 **7 Claims**

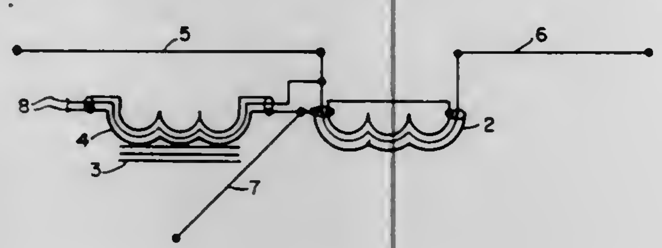

1. A multiple frequency band antenna for coupling to a feedline comprising:
a high permeability core;
a coaxial network including
first and second input terminals for connection to said feedline, and
first and second coaxial cables each comprising an electrically conductive shield having first and second ends and a center conductor having first and second ends, said first coaxial cable being wrapped about said high permeability core and having the first end of its center conductor and its shield connected to said first and second input terminals, the second end of the center conductor of said first coaxial cable being connected to the first end of the center conductor of said second coaxial cable, the conductive shields of said first and second coaxial cables being connected together; and
first, second and third conductive radiation elements, said first element being coupled to the junction between the first and second ends of the center conductors of said first and second coaxial cables respectively, said second element being coupled to the second end of the center conductor of said second coaxial cable and said third element being coupled to the junction between the shields of said first and second coaxial cables, said second coaxial cable having an electrical length equal approximately to an integral multiple of one-half wavelengths at the frequency at which said first and second elements are half-wave resonant, said high permeability core decoupling energy in said antenna from the exterior of said feedline.

4,062,018
SCANNING ANTENNA WITH MOVEABLE BEAM WAVEGUIDE FEED AND DEFOCUSING ADJUSTMENT
Hiroshi Yokoi, Machida, and Masataka Akagawa, Yokohama, both of Japan, assignors to Kokusai Denshin Denwa Kabushiki Kaisha, Japan
Continuation of Ser. No. 533,800, Dec. 18, 1974, abandoned. This application Aug. 11, 1976, Ser. No. 713,590
Claims priority, application Japan, Dec. 21, 1973, 48-142384
Int. Cl.² H01Q *3/12, 19/14*
U.S. Cl. 343—754 **9 Claims**

1. An aperture antenna, comprising:
a. a fixed main parabolic reflector having a parabolic reflecting surface;
b. a primary radiator for radiating electromagnetic radiation;
c. a pair of movable auxiliary parabolic reflectors positioned between said main reflector and said primary radiator for reflecting electromagnetic radiation from said primary radiator along a path towards the parabolic reflecting surface of said main reflector, one of said auxiliary reflectors being positioned closer to said main reflector than the other of said auxiliary reflectors;
d. first control means operable for controlling the position of the closer one of said auxiliary reflectors along the path of

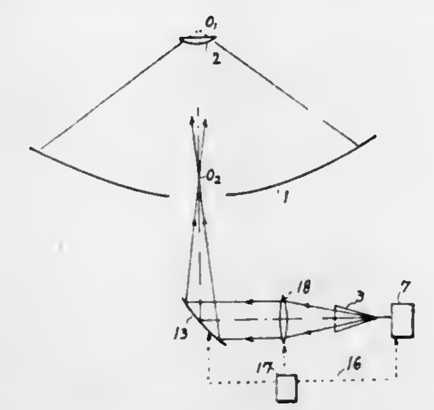

electromagnetic radiation to displace the area of the parabolic reflecting surface irradiated by the electromagnetic radiation thereby to change the direction of electromagnetic radiation reflected from said main reflector; and
e. second control means operable for controlling the position of the other of said auxiliary reflectors to displace it in a direction effective to correct for wavefront defocusing distortion of the electromagnetic radiation reflected from said main reflector caused by the displacement of said closer one of said auxiliary reflectors.

4,062,019
LOW COST LINEAR/CIRCULARLY POLARIZED ANTENNA
Oakley McDonald Woodward, Princeton, and Matti Solmu Olavi Siukola, Westmont, both of N.J., assignors to RCA Corporation, New York, N.Y.
Filed Apr. 2, 1976, Ser. No. 672,859
Int. Cl.² H01A *21/26*
U.S. Cl. 343—797 **5 Claims**

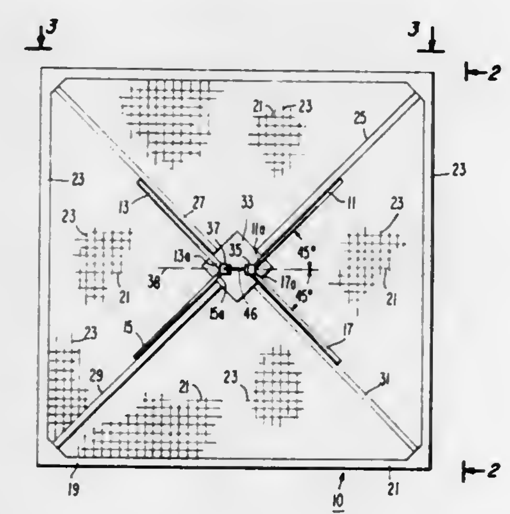

1. An antenna system operating over a given band of frequencies comprising:
a flat reflective panel,
support means including a pair of separated support members extending generally orthogonal to said panel,
a first pair of generally orthogonally oriented conductive elements joined together at one end to one of said support members a distance of about one-quarter wavelength at a given frequency within said given band of frequencies from said panel, at least one of said elements being at least

about one-quarter wavelength long at said given frequency,
a second pair of generally orthogonally oriented conductive elements joined together at one end to the other of said support members about said distance from said panel, at least one of said elements being at least about one-quarter wavelength long at said given frequency, each one of said pair of elements in said first pair extending in generally an opposite direction from one of the conductive elements in said second pair of elements, each of said conductive elements being inclined toward said reflective panel with each of said conductive elements having a conductive loading rod connected across the free end thereof, and
a coaxial transmission line feed having an outer conductor coupled to one of said pair of orthogonally oriented elements and a center conductor coupled to the other of said pair of orthogonally oriented conductive elements at a point located approximately where said conductive elements are joined together to said support members.

4,062,020
CIRCUIT ARRANGEMENT FOR THE FREQUENCY ANALYSIS OF A SIGNAL
Kurt Berglund, Solna, Sweden, assignor to Siemens Aktiengesellschaft, Berlin & Munich, Germany
Filed Mar. 5, 1976, Ser. No. 664,414
Claims priority, application Germany, Mar. 24, 1975, 2512939
Int. Cl.² G01R *23/18*
U.S. Cl. 346—33 R **8 Claims**

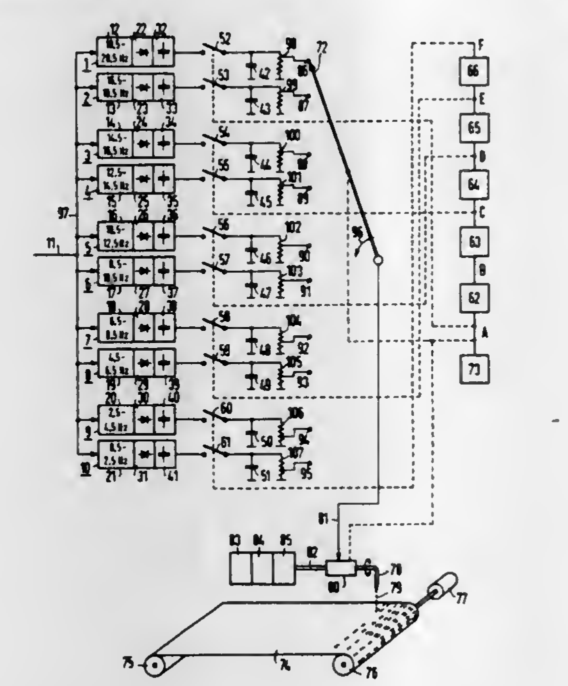

1. In a circuit arrangement for the frequency analysis of a signal, including a plurality of band filter channels having inputs to which the signal is transmitted in parallel connection, said channels including band filters of different boundary frequencies, rectifiers and integrators for integrating the rectified output signals of the band filters within predetermined integrating intervals; and a scanning installation being connected to the outputs of the latter for retrieving the integrating results after predetermined intervals, the improvement comprising: means comprising switch elements for determining the integrating intervals in dependence upon the median transmissive frequencies of said band filters so that the integrating intervals decrease with an increasing median transmissive frequency of said band filters; and switch elements having correlating means connected to the outputs of said integrators for correlating each integrating result to the corresponding integrating interval.

4,062,021
INK RECORDER WITH GROOVED PRESSURE ROLLER FEED
Leonard Harold Taylor, Loudwater, England, assignor to Perkin-Elmer Limited, Beaconsfield, England
Filed Sept. 10, 1976, Ser. No. 722,191
Claims priority, application United Kingdom, Sept. 12, 1975, 37511/75
Int. Cl.² G01D *15/24;* G03B *1/24*
U.S. Cl. 346—136 **13 Claims**

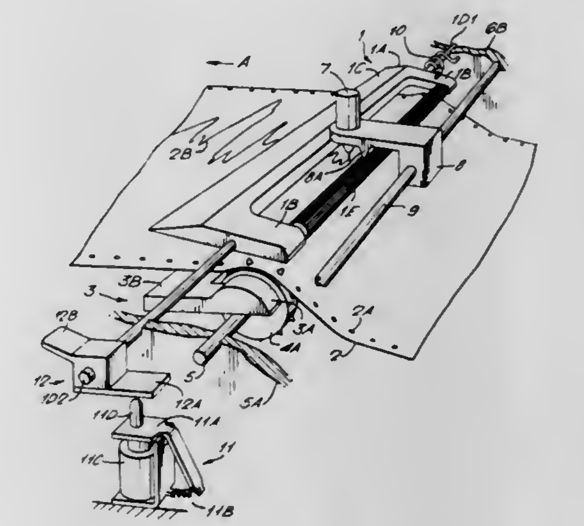

1. An improved strip chart recorder comprising, in combination:
a platen with a smooth arcuate surface;
a strip chart;
a chart advancing means coupled to said strip chart to advance said strip chart over said platen in a forward direction;
a wet-ink recorder pen mounted for rectilinear motion longitudinally of said platen;
a pressure roller disposed adjacent said platen and upstream of said recorder pen with reference to said forward direction with said strip chart passing between said roller and said platen, said roller being non-yielding under pressure and having a plurality of longitudinally extending grooves in the surface of said roller, each of said grooves being separated from adjacent grooves by a narrow crest, each said groove having a length sufficient to extend over the entire working surface of said chart; and
means to support said roller adjacent said platen permitting free rotation thereof about its rotation axis and selectively urge said roller either towards or away from said platen with said strip chart disposed therebetween, said roller being urged toward said platen when said chart is advanced in said forward direction by said advancing means and urged away from said chart when said chart is not being advanced.

4,062,022
DEVICE FOR PREVENTING ERRONEOUS HANDLING OF A CAMERA
Hiroyashu Murakami, Tokyo; Tadashi Ito, Yokohama; Fumio Ito, Yokhama; Nobuaki Sakurada, Yokohama; Mashaharu Kawamura, Hino, and Nobuhiko Shinoda, Tokyo, all of Japan, assignors to Canon Kabushiki Kaisha, Tokyo, Japan
Filed Oct. 17, 1975, Ser. No. 623,370
Claims priority, application Japan, Oct. 18, 1974, 49-119939
Int. Cl.² G03B *7/08*
U.S. Cl. 354—38 **10 Claims**

1. A dual preference camera capable of effecting shutter time priority and aperture value priority comprising:
a. shutter means;
b. shutter control means functionally engaged with said shutter means;
c. shutter time setting input means functionally engageable

with said shutter control means for controlling said shutter means during an opening time of said shutter means corresponding to a set value, said shutter time setting input means having a first operating mode for manual adjustment of the shutter time and a second operating mode for automatic adjustment of the shutter time;

d. aperture means;

e. aperture control means functionally engageable with said aperture means;

f. aperture value setting input means, functionally engageable with said aperture control means for controlling said aperture means in correspondence with an aperture set value, said aperture value setting input means having a first operating mode for manual adjustment of the aperture value and a second operating mode for automatic adjustment of the aperture value;

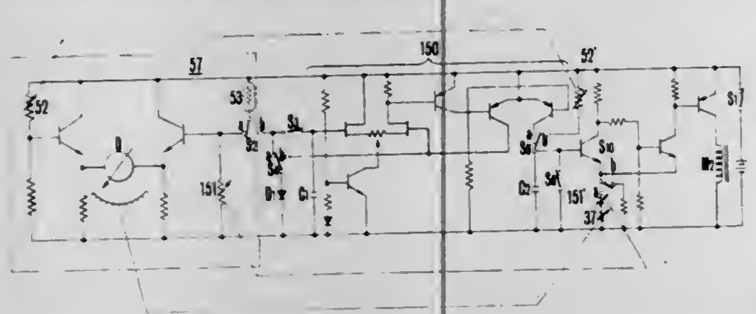

g. exposure control means to effect a desired exposure time including light measuring means for measuring object brightness, said exposure control means being operatively connected to said shutter control means and said aperture control means to control said shutter means and said aperture means in accordance with signals from said shutter time setting input means, said aperture value setting input means and said light measuring means; and

h. means for preventing erroneous handling of said camera, said erroneous handling preventing means being connected to said shutter time setting input means and said aperture value setting input means so that only when both said means are set in the automatic adjustment modes, the actuation of the shutter release of the camera is prevented.

4,062,023

EXPOSURE CONTROL DEVICES FOR PHOTOGRAPHIC CAMERAS

Toshio Kobori, Sakai; Kayoshi Tsujimoto, Osaka; Yasuhiro Nanba, and Seiji Yamada, both of Sakai, all of Japan, assignors to Minolta Camera Kabushiki Kaisha, Osaka, Japan

Division of Ser. No. 486,427, July 8, 1974, Pat. No. 3,964,073. This application Apr. 6, 1976, Ser. No. 674,721

Claims priority, application Japan, July 17, 1973, 48-81089

Int. Cl.² G03B *7/08*

U.S. Cl. 354—38 **8 Claims**

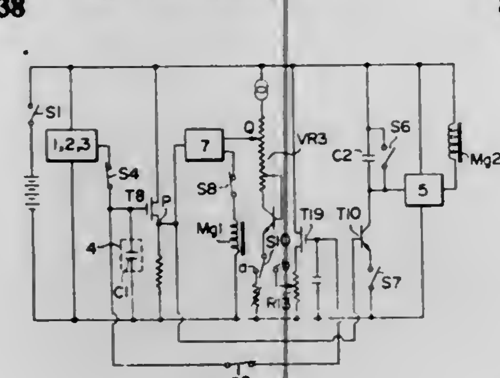

1. An exposure control device for a photographic camera having an objective lens and a diaphragm, comprising:

diaphragm controlling means movable from an initial to a terminal position for varying the aperture size of said diaphragm;

means for measuring the scene light transmitted through said objective lens and diaphragm to generate a first electrical signal in accordance with the intensity of the light transmitted through said objective lens and diaphragm;

means for producing a second electrical signal in accordance with a linear function of said first electrical signal;

means for determining an operative position at which said diaphragm controlling means is stopped in accordance with the difference between said first and second electrical signals appearing with said diaphragm controlling means at said initial position; and

means for controlling the exposure time in accordance with said first electrical signal appearing with said diaphragm controlling means at said operative position.

4,062,024

CONTROL SYSTEM CONSISTING OF SEMI-CONDUCTOR INTEGRATED CIRCUITS FOR A CAMERA

Tokuichi Tsunekawa; Masanori Uchidoi, both of Yokohama; Masami Shimizu, Tokyo; Masayoshi Yamamichi, Kawasaki; Keiya Murayama, Fukushima, and Hiroshi Aizawa, Machida, all of Japan, assignors to Canon Kabushiki Kaisha, Tokyo, Japan

Filed Sept. 30, 1975, Ser. No. 618,125

Claims priority, application Japan, Oct. 4, 1974, 49-114835

Int. Cl.² G03B *7/00*

U.S. Cl. 354—60 R **12 Claims**

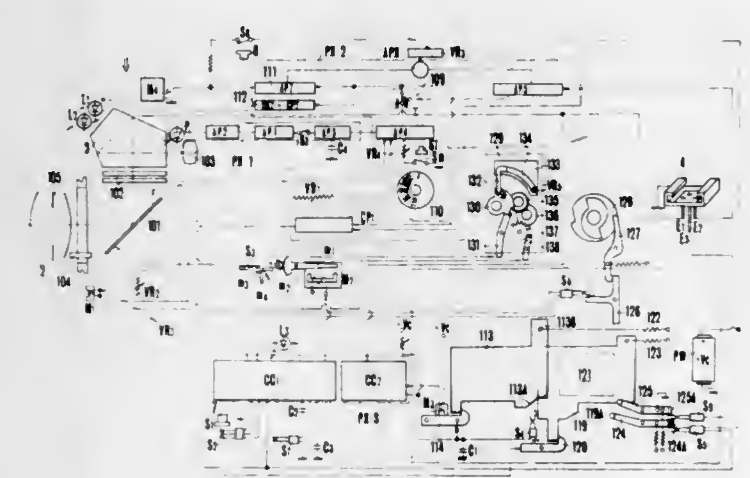

1. A camera with electronic control function comprising:

A. a camera body;

B. photographic lenses, said lenses being interchangeably mounted on the camera body and presenting certain determined maximum aperture values;

C. an exposure adjusting device, said device being built in the camera body and including:

a. a light sensing means, said means being provided at the position at which the light beam coming through the photographic lenses is received so as to produce an electrical signal,

b. an exposure value setting means, said means setting other set exposure informations than the exposure informations to be adjusted so as to produce an electrical signal,

c. an exposure measuring circuit, said circuit including an input to be connected to the light sensing means, an output and a first current supply input and being composed as a first integrated circuit,

d. an exposure operation circuit, said circuit including an input to be connected to the exposure value setting means and an input to be connected to the exposure measuring circuit and a second current supply input for said circuit to operate effectively,

e. an exposure control circuit, said circuit including an input to be connected to the output of the exposure operation circuit, an output for giving an output signal corresponding to the exposure information value to be adjusted and a third current supply input for said circuit to operate effectively,

f. an exposure determining means, said means being functionally engaged with the photographic lenses so as to restrict the light beam passing through the lenses further said means including an electromagnetic means functionally engaged with the exposure control circuit; and

D. a current supply control circuit, said circuit being built in the camera body and including a current supply output for supplying the current to the first, the second and the third current supply input in functional engagement with the actuation of the camera body and further including a signal producing circuit for supply current to the third current supply input later than the first and the second current supply input.

4,062,025

METHOD AND APPARATUS FOR MICROFORM UPDATING

Harry Arthur Hele Spence-Bate, 1 Cheam Place, Morley, Australia (6062)

Filed May 13, 1976, Ser. No. 685,994

Claims priority, application Australia, May 15, 1975, 1613/75

Int. Cl.² B29C *19/00;* **B32B** *31/00;* **B60J** *1/00;* **G03B** *29/00*

U.S. Cl. 354—76 **14 Claims**

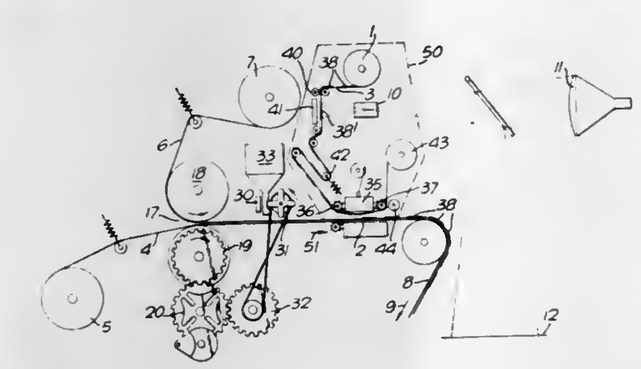

10. Apparatus for microform updating comprising a microform camera for recording a sequence of images on a film emulsion, means for moving said film emulsion retained on permanent carrier material to a transfer station, means for feeding a strip of primary base material to said transfer station and means for applying said film emulsion and permanent carrier material to said primary base material at said transfer station, said means for applying a plunger having an interconnected and surrounding blade, said blade adapted to cut an image-carrying frame from said film emulsion and said plunger being adapted to remove said frame and bond said carrier material to said primary base material.

4,062,026

DATA RECORDING MEANS FOR USE IN A SINGLE LENS REFLEX CAMERA

Susumu Fujita, Kobe, Japan, assignor to Fuji Photo Film Co., Ltd., Minami-ashigara, Japan

Filed Sept. 15, 1976, Ser. No. 723,344

Claims priority, application Japan, Oct. 28, 1975, 50-130065; Feb. 17, 1976, 51-16637

Int. Cl.² G03B *17/24*

U.S. Cl. 354—106 **7 Claims**

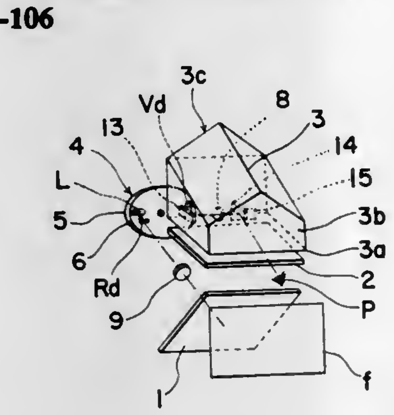

1. In a camera comprising a taking lens assembly, shutter means and a viewfinder system including a mirror which is normally disposed at an angle of 45° with respect to the optical axis of said taking lens system and positioned between said taking lens system and the frame of a film located at an exposure station and for directing image-wise light reflected from an external scene upwards to and through a focussing screen and into a pentaprism, said pentaprism having lower and rear surfaces which are transparent, and having at least the major portions of the other surfaces externally silvered and which causes said image-wise light to be directed to the eye-lens of the viewfinder system, and means for moving said mirror temporarily to a horizontal position to permit exposure of said film frame to said image-wise light upon actuation of said shutter means, and data recording means, the improvement wherein said data recording means comprises:

data carrier means constituted by at least one disk means which is rotatably mounted adjacent to said pentaprism and defines at least two identical series of data items, the same positional relationship on said disk means being maintained between all corresponding items of data in said series whereby when said disk means is rotated to bring one of said items of data in one of said series to a first position, a corresponding item of data in other said series is brought to a second position;

a data recording optical system including at least a lens means for focussing on said film frame the image of a data item positioned at said first position; and

a data viewing optical system which directs the image of a data item at said second position from said second position along an optical path which lies forward of the base portion of said pentaprism, through a small transparent portion in the lower front surface of said pentaprism, and through said pentaprism to said eye-lens.

4,062,027

DATA EXPOSURE DEVICE FOR CAMERA

Kazuo Miyazaki, Kawasaki, and Sachio Ohmori, Yokohama, both of Japan, assignors to Nippon Kogaku K.K., Tokyo, Japan

Filed Apr. 1, 1975, Ser. No. 563,955

Claims priority, application Japan, Apr. 9, 1974, 49-39786[U]

Int. Cl.² G03D *15/02*

U.S. Cl. 354—127 **5 Claims**

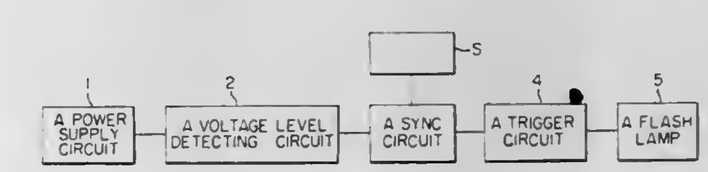

1. A data exposure device for a camera by which a desired data is exposed to a film by igniting a flash lamp, comprising:

a. a main flash capacitor for applying a charged voltage to the flash lamp;

b. a voltage detecting element which becomes conductive when the voltage across the main flash capacitor reaches a predetermined level sufficient to cause the flash lamp to generate a proper light quantity;

c. a synchro switch adapted to be closed when a shutter of the camera is released;

d. switch means connected to both the voltage detecting element and the synchro switch, the switch means generating an output due to closure of the synchro switch only when the voltage detecting element is conductive;

e. a trigger circuit actuated by said output, the flash lamp being triggered by actuation of the trigger circuit; and

f. a synchro terminal connected in parallel with the synchro switch.

4,062,028

SINGLE REFLEX CAMERA

Nobuo Tezuka, Tokyo; Masanori Uchidoi, Kawasaki; Yukio Iura, Yokosuka; Satoshi Watanabe, Inagi; Masayoshi Yamamichi, Kawasaki, and Hiroshi Aizawa, Machida, all of Japan, assignors to Canon Kabushiki Kaisha, Tokyo, Japan

Filed July 7, 1975, Ser. No. 593,301

Claims priority, application Japan, July 9, 1974, 49-78494; July 9, 1974, 49-78495; July 17, 1974, 49-83061; July 17, 1974, 49-83062

Int. Cl.² G03B *19/12, 17/00, 9/02*

U.S. Cl. 354—152 **4 Claims**

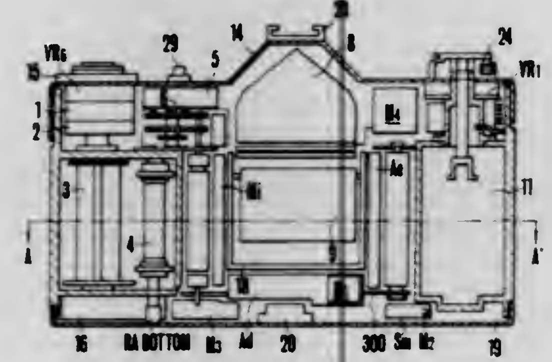

1. A single lens reflex camera, comprising a camera body having a top wall and a bottom wall, and a mirror box in the camera body, a shutter button, a shutter assembly embracing the mirror box, shutter driving means mounted in said camera body, mirror lifting means mounted in said camera body, automatic diaphragm control means disposed between the mirror box and the bottom wall of the camers body, and an electromagnetic release means having a mechanical output coupled to said automatic diaphragm control means, said automatic diaphrgam control means and said mirror lifting means and said shutter driving means being coupled to each other so that said diaphragm control means and said lifting means and said shutter driving means are initiated in succession in response to said release means, said electromagnetic release means being located in a space above the bottom wall of the camera body and below the level of the mirror box.

4,062,029

LENS SHUTTER ACTUATING DEVICE FOR QUICK-RETURN TYPE SINGLE-LENS REFLEX CAMERA

Kiyoshi Kitai, Tokyo; Yukio Nakamura, Yotsukaido; Shogo Kato, Daiei, and Shinji Nagaoka, Yotsukaido, all of Japan, assignors to Seiko Koki Kabushiki Kaisha, Japan

Continuation of Ser. No. 461,805, April 17, 1974, abandoned. This application Jan. 27, 1976, Ser. No. 652,815

Claims priority, application Japan, Apr. 19, 1973, 48-43652

Int. Cl.² G03B *9/00, 9/08*

U.S. Cl. 354—232 **2 Claims**

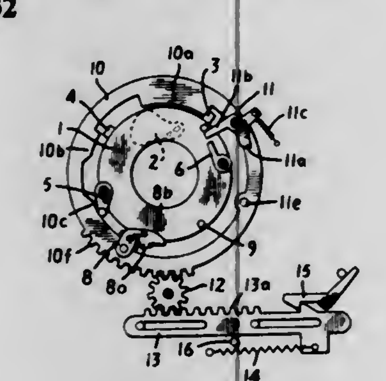

1. In a lens shutter for a quick-return type single lens reflex camera, shutter blades, a single shutter-operating ring for closing and opening the shutter for focusing independently of an exposure operation and for taking of an exposure, driving means for rotating the shutter-operating ring in one direction for closing the shutter blades and reopening the shutter blades for taking an exposure, a signal lever continuously free of said shutter-operating ring rotatable when an exposure is completed, a stop lever pivotally mounted at a fixed point in the vicinity of said shutter-operating ring stopping the rotation of the shutter-operating ring after said shutter-operating ring releases the shutter and opens the shutter blades for taking an exposure, said stop lever being disposed for engaging said signal lever and being locked thereby holding the shutter-operating ring stopped until an exposure is completed, a pin on said shutter-operating ring for engaging said stop lever and camming it in a direction for directly engaging said signal lever and being held thereby for precluding rotation of said shutter-operating ring until release of said stop lever by said signal lever, and when an exposure is completed said signal lever is rotated and releases said stop lever effective to release said pin allowing continued rotation of said shutter-operating ring in said one direction for reopening the shutter blades.

4,062,030

INTERCHANGEABLE LENS RETAINING MEANS FOR PHOTOGRAPHIC CAMERAS

Franz Starp, Wildbad, Germany, assignor to Carl Zeiss Stiftung, Oberkochen, Germany

Filed Nov. 18, 1976, Ser. No. 742,855

Claims priority, application Germany, Nov. 29, 1975, 2553861

Int. Cl.² G03B *17/14*

U.S. Cl. 354—286 **10 Claims**

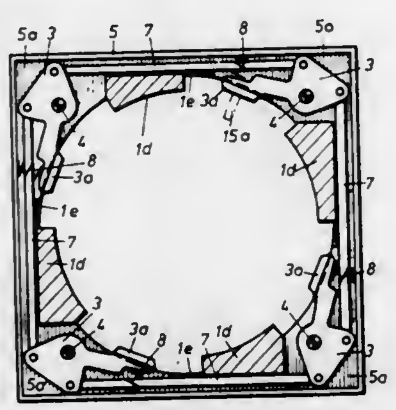

1. Retaining means for detachably coupling a lens to a camera upon axial movement without rotary movement of the lens relative to the camera, said retaining means comprising radially extending flange means on said lens, said flange means having a front face and a rear face, latch means mounted on said camera for movement having a radial component between a latching position engaging said front face when said lens is seated on said camera to hold said lens against removal therefrom and an unlatching position disengaged from said front face, spring means tending to move said latching means toward its latching position, and latch releasing means mounted on said lens for shifting said latch means from its latching position to its unlatching position to permit removal of said lens from said camera.

4,062,031

APPARATUS FOR PRODUCING A DEVELOPER MEDIUM FOR DIAZOTYPE MATERIALS

Herbert Schröter, Taunusstein, Germany, assignor to Hoechst Aktiengesellschaft, Germany

Continuation of Ser. No. 395,153, Sept. 7, 1973, abandoned. This application Feb. 26, 1976, Ser. No. 661,575

Claims priority, application Germany, Sept. 9, 1972, 2244422

Int. Cl.² G03D *7/00, 13/00*

U.S. Cl. 354—299 **3 Claims**

1. Apparatus for producing from a developer solution a gaseous developer for diazotype materials, the apparatus comprising means for vaporizing said solution, said means having an upper end and a lower end,

inlet and outlet means for said solution, said outlet means comprising a siphon with a descending, ascending and finally again descending portion, said siphon comprising a block of thermally conductive material having a plurality of downwardly extending bores therethrough, the lower end of each of the bores opening into a common collecting channel, and said downwardly extending bores opening

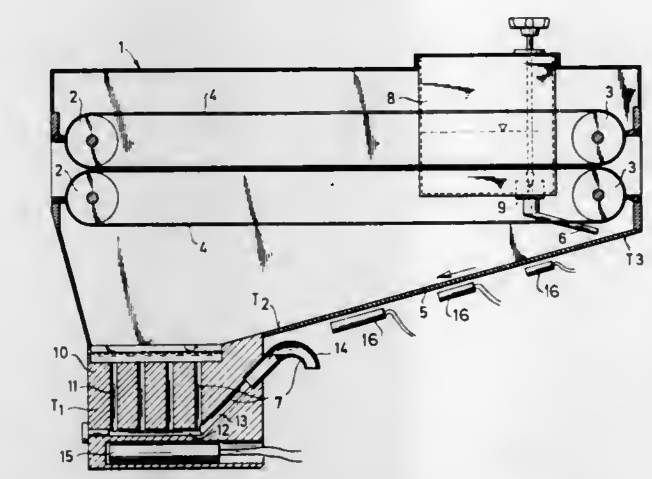

into said collecting channel forming at least a part of the first descending portion of said siphon,

and electrical heating means for said siphon, said heating means being adapted to heat the siphon to a temperature which is at least 25° C higher than the temperature at the upper end of the means for vaporizing said solution.

4,062,032

GATE TURN OFF SEMICONDUCTOR RECTIFIERS

John Manning Savidge Neilson, Mountaintop, Pa., assignor to RCA Corporation, New York, N.Y.

Continuation-in-part of Ser. No. 364,664, May 29, 1973, abandoned. This application May 27, 1975, Ser. No. 580,771

Int. Cl.² H01L *29/90*

U.S. Cl. 357—13 **13 Claims**

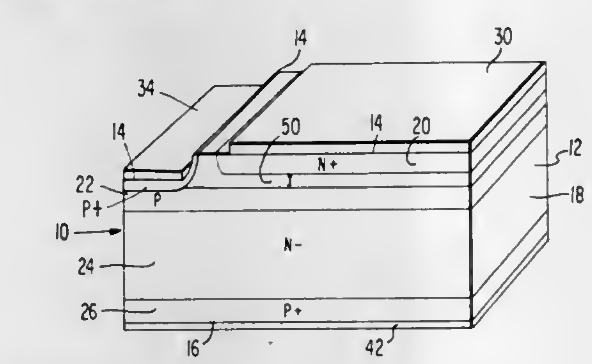

1. A gate controlled rectifier comprising:

a body of semiconductor material including two emitter regions and two base regions, each base region being disposed between an emitter region and the other of said base regions, adjacent regions being of opposite type conductivity and having a PN junction therebetween

a gate electrode connected to one of said base regions, and

means for increasing the avalanche breakdown capability of said rectifier for voltages applied between said one base region and the emitter region adjacent thereto, said means comprising:

a. a layer of semiconductor material of the same conductivity type as that of said adjacent emitter region between said one base region and said adjacent emitter region, in which the average concentration of dopant atoms of each conductivity type, including both the compensated and uncompensated atoms thereof, is less than the maximum concentration of the majority type dopant atoms in said one base region, and

b. said layer having a thickness adequate to increase said avalanche breakdown capability to a voltage greater than the voltage drop through said one base region caused by the diversion of current within said one base region from said adjacent emitter region to said gate electrode said current being generated by a turn-off voltage applied to said gate electrode.

4,062,033

SCHOTTKY BARRIER TYPE SEMICONDUCTOR DEVICE

Kunizo Suzuki, Tokyo, Japan, assignor to Sony Corporation, Tokyo, Japan

Filed Apr. 9, 1976, Ser. No. 675,630

Claims priority, application Japan, Apr. 25, 1975, 50-50435

Int. Cl.² H01L *29/48, 29/34, 29/40*

U.S. Cl. 357—15 **5 Claims**

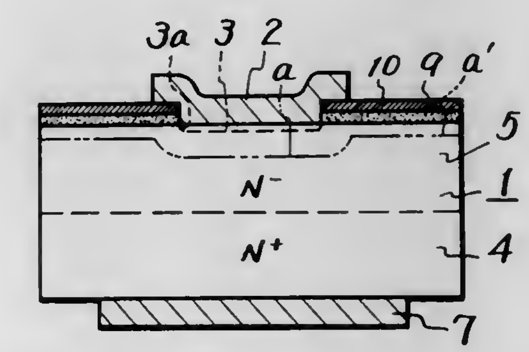

1. A Schottky barrier type semiconductor device comprising: a semiconductor substrate having a predetermined impurity concentration, an electrode formed on said semiconductor substrate in ohmic contact therewith, a metal contact on a surface of said substrate which forms a Schottky barrier with said semiconductor substrate, and a polycrystalline silicon layer containing oxygen atoms in the range between 2 and 45 atomic percent on said surface of said substrate; said polycrystalline silicon layer extending on said surface at least up to the corner which the peripheral portion of said metal contact makes with said surface of said substrate whereby said surface of said semiconductor substrate is stabilized, and the breakdown of said barrier is prevented.

4,062,034

SEMICONDUCTOR DEVICE HAVING A HETERO JUNCTION

Takeshi Matsushita, Sagamihara; Hisao Hayashi, Atsugi, and Mitsuru Shibasaki, Hatano, all of Japan, assignors to Sony Corporation, Tokyo, Japan

Filed Apr. 23, 1976, Ser. No. 679,846

Claims priority, application Japan, Apr. 30, 1975, 50-52731

Int. Cl.² H01L *29/161*

U.S. Cl. 357—16 **9 Claims**

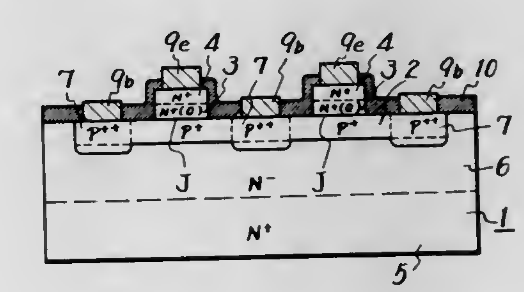

1. A semiconductor device comprising a semiconductor region of a predetermined conductivity type, a polycrystalline or amorphous silicon layer containing oxygen and of a predetermined conductivity type on said region and forming a hetero junction therewith, and means for supplying an electrical current through said junction.

4,062,035
LUMINESCENT DIODE
Guenter Winstel, Ottobrunn, Germany, assignor to Siemens Aktiengesellschaft, Berlin & Munich, Germany
Continuation of Ser. No. 654,786, Feb. 3, 1976. This application Jan. 28, 1977, Ser. No. 763,548
Claims priority, application Germany, Feb. 5, 1975, 2504775
Int. Cl.² H01L *33/00*
U.S. Cl. 357—17 **13 Claims**

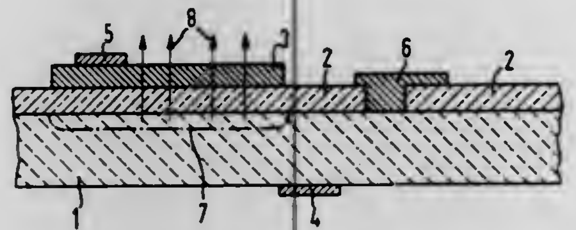

1. A semiconductor luminescent diode comprising a semiconductor body, a layer of insulating material on this semiconductor body, and a layer of conductive material arranged upon said insulating layer, the layer of insulating material being monocrystalline having the crystal structure of the semiconductor body, and having a spacing of energy bands which is greater than the energy of the light quanta which are emitted during a radiative recombination of charge carriers in the semiconductor body.

4,062,036
JUNCTION FIELD EFFECT TRANSISTOR OF VERTICAL TYPE
Takashi Yoshida, Hamamatsu, Japan, assignor to Nippon Gakki Seizo Kabushiki Kaisha, Hamamatsu, Japan
Filed Apr. 4, 1975, Ser. No. 565,261
Claims priority, application Japan, Apr. 6, 1974, 49-38471
Int. Cl.² H01L *29/80, 29/06*
U.S. Cl. 357—22 **8 Claims**

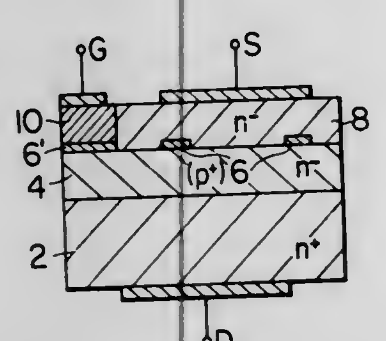

1. A vertical-type junction field effect transistor comprising:
a drain region provided on a highly doped semiconductor substrate having a certain conductivity type and made of a semiconductor body having a conductivity type the same as that of said substrate and having a low impurity concentration,
a source region formed on one surface of said drain region and made with a semiconductor body having a conductivity type the same as that of said drain region and having throughout a substantially constant impurity concentration not lower than that of the drain region, and
a gate region provided at the intersurface between said drain region and said source region and having a conductivity type opposite to the conductivity type of said drain region and source region,
said gate region being formed on the surface of said drain region between said drain and said source regions and protruding only into said source region.

4,062,037
SEMICONDUCTOR MEMORY DEVICE
Ryoiku Togei; Akira Takei, and Kunihiko Wada, all of Kawasaki, Japan, assignors to Fujitsu Limited, Japan
Filed Apr. 15, 1976, Ser. No. 677,130
Claims priority, application Japan, Apr. 18, 1975, 50-46321
Int. Cl.² H01L *29/78, 27/10*
U.S. Cl. 357—24 **22 Claims**

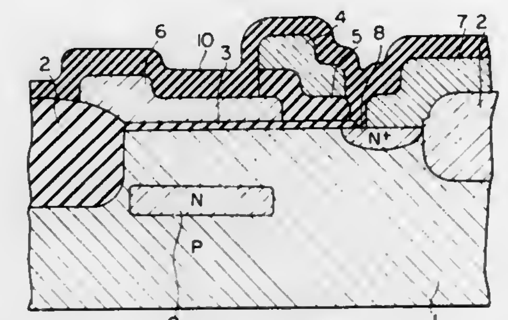

1. A semiconductor memory device, which comprises:
a semiconductor material substrate having one particular conductivity type and comprising, on the surface thereof, a doped layer with an impurity of the opposite conductivity type, a first surface region of said substrate adjoining said doped layer used as a gate region, a second surface region of said substrate adjoining said first surface region used as a memory cell region, and further comprising in the interior thereof a buried layer of said opposite conductivity type situated below said memory cell region of said substrate;
a doped layer electrode disposed on said substrate and electrically connected with said doped layer;
a first insulating layer placed on said substrate and, with said doped layer electrode, incompletely covering said doped layer so as to form an aperture exposing a part of said doped layer;
a gate electrode placed over said gate region and electrically insulated from said gate region by at least said first insulating layer; and
a memory cell electrode placed over said memory cell region and electrically insulated from said memory cell region by at least said first insulating layer; wherein an electric charge of said opposite conductivity type is either injected from said doped layer through said gate region into said buried layer to be stored in this layer or withdrawn from said buried layer through said gate region to said doped layer, depending upon the electric potential levels in said substrate, which levels are established by electric fields created by each of said electrodes through said insulating layers.

4,062,038
RADIATION RESPONSIVE DEVICE
Jerome John Cuomo, Bronx; Thomas Herman DiStefano, Tarrytown, and Robert Rosenberg, Peekskill, all of N.Y., assignors to International Business Machines Corporation, Armonk, N.Y.
Filed Jan. 28, 1976, Ser. No. 652,961
Int. Cl.² H01L *27/14*
U.S. Cl. 357—30 **9 Claims**

1. Radiation responsive device comprising:
a semiconductor body having a carrier collection surface adapted to receive said radiation, metallic contacts connected to said body for substantially collecting electrons and holes generated by incident radiation in the active volume of said semiconductor body as external current,
said semiconductor body comprising
a crystalline semiconductor region of a given conductivity type having defects therein selected from the class consisting of linear and planar defects which are topologically connected to said radiation receptive surface including

therewith recombination centers thereat for charge carriers,
zones of relatively high dopant concentrations of opposite conductivity type proximate respectively to said defects and which substantially envelop them for establishing an

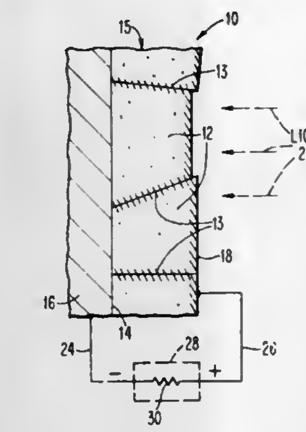

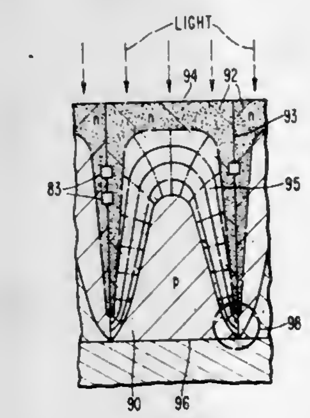

electric field pattern in said active volume of said semiconductor body which repels one of said electrons or holes, and collects the other of said electrons or holes, and
semiconductor junction means in association with said semiconductor region which together with said zones of dopant concentrations establishes said electric field pattern.

4,062,039
SEMI-CONDUCTOR INTEGRATED CIRCUIT
Izuhiko Nishimura, Suwa, Japan, assignor to Kabushiki Kaisha Suwa Seikosha, Tokyo, Japan
Filed Feb. 3, 1976, Ser. No. 654,688
Claims priority, application Japan, Feb. 3, 1975, 50-14112
Int. Cl.² H01L *27/02, 29/34, 29/78*
U.S. Cl. 357—51 **9 Claims**

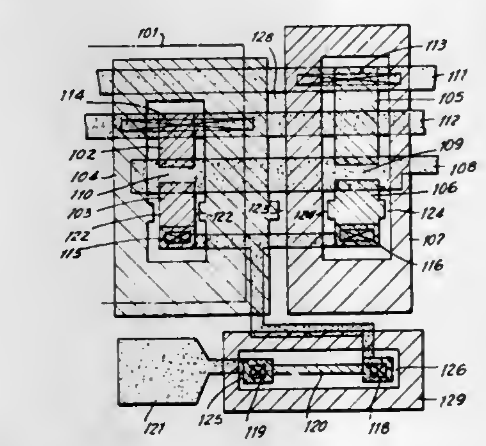

1. A semi-conductor integrated circuit comprising in combination, a C-MOS circuit formed of at least a P-channel field-effect transistor and an N-channel field-effect transistor, said circuit having respective input and output terminals, said field-effect transistors having commonly coupled drain output terminals, resistance means for reducing the secondary breakdown of said field-effect transistors, said resistance means being coupled intermediate said commonly coupled drain output terminals and said circuit output terminal, power terminals, and a stopper region associated with said drain output terminal, said stopper regions being referenced to one of said power terminals, the distance between at least one of said drain output terminals and said associated stopper regions defining a junction region adapted to be subject to primary breakdown at a voltage lower than a predetermined voltage, said predetermined voltage being lower than the primary breakdown voltage of the remaining junction of said C-MOS circuit.

4,062,040
FIELD EFFECT TRANSISTOR STRUCTURE AND METHOD FOR MAKING SAME
Shakir Ahmed Abbas, Wappingers Falls, and Robert Charles Dockerty, Highland, both of N.Y., assignors to IBM Corporation, Armonk, N.Y.
Division of Ser. No. 635,523, Nov. 26, 1975. This application Mar. 24, 1977, Ser. No. 780,943
Int. Cl.² H01L *29/34*
U.S. Cl. 357—54 **2 Claims**

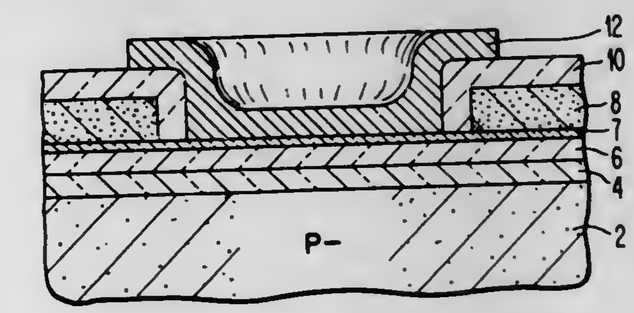

1. In a field effect transistor which includes a composite silicon dioxide-silicon nitride insulating layer over the active regions thereof;
a field shield electrode of polycrystalline silicon over a portion of said composite layer;
a conductive silicon dioxide layer over the upper and sidewall surfaces of said field shield; and
a gate electrode disposed over said composite layer and insulated from said field shield by said conductive silicon dioxide layer;
the improvement comprising;
a layer of highly resistive material disposed between said conductive silicon dioxide layer and said silicon nitride layer;
said material selected from group consisting of silicon oxynitride and silicon dioxide.

4,062,041
INPUT VOLTAGE CONTROLLED OSCILLATOR CIRCUIT FOR A TELEVISION SIGNAL TIME BASE CORRECTOR
Michael W. Tallent, San Jose; Lee E. Scaggs, Mountain View; Allan L. Swain, Palo Alto; Ronnie M. Harrison, and William B. Hendershot, III, both of San Jose, all of Calif., assignors to Consolidated Video Systems, Inc., Santa Clara, Calif.
Division of Ser. No. 381,463, July 27, 1973, Pat. No. 3,860,952. This application Jan. 10, 1975, Ser. No. 540,025
Int. Cl.² H04N *5/76, 9/46*
U.S. Cl. 358—8 **3 Claims**

1. An oscillator circuit for generating reference signals having a frequency corrected in accordance with time base errors in video type signals, said circuit comprising:
an oscillator having a control signal input for generating a reference signal train having a frequency dependent upon a control signal present at said control signal input;
means coupled to said oscillator for generating a sync reference signal;
a first phase comparator means having a first input coupled to said sync reference signal and a second input adapted to be coupled to the sync portion of said video type signals,

said first phase comparator means including means for detecting a first phase difference between said sync reference signal and successive ones of said sync portions of said video type signals, and means for generating a first control signal having a magnitude dependent upon said first phase difference;

means coupled to said oscillator for generating a color burst frequency reference signal;

a second phase comparator means having a first input coupled to said color burst frequency reference signal and a second input adapted to be coupled to the color burst portions of said video type signal, said second phase comparator means including means for detecting a second phase difference between said color burst frequency reference signal and successive ones of said color burst portions of said video type signals and means for generating a second control signal having a magnitude dependent upon said second phase difference;

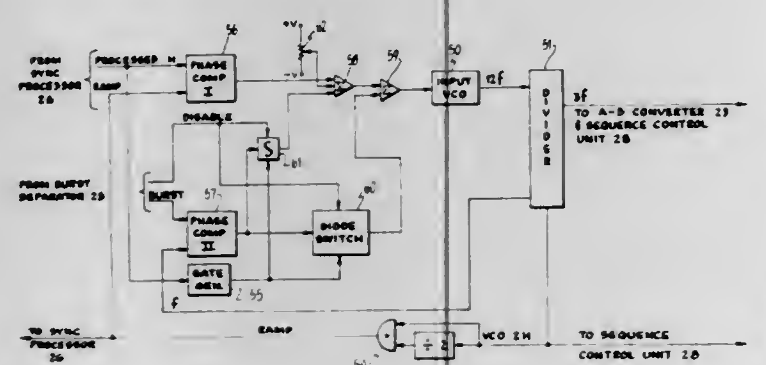

means for coupling said first and second control signals to said control signal input of said oscillator, whereby said reference signal train frequency varies in accordance with the magnitude of said first and second control signals to minimize said first and second phase differences;

said coupling means including gating means for transmitting said second control signal to said control signal input, and means for enabling said gating means during the color burst portion of successive lines of said video type signals;

gated integrator means coupled to said second phase comparator means for integrating successive ones of said second control signals over a plurality of successive lines of said video type signals; and

means for enabling said gated integrator means during the color burst portion of successive lines of said video type signals.

4,062,042

D.C. CONTROLLED ATTENUATOR

Arthur Richard Ott, Kitchener, Canada, assignor to Electrohome Limited, Kitchener, Canada

Filed Oct. 7, 1976, Ser. No. 730,620

Int. Cl.² H04N *9/537;* **H03F** *3/18;* **H03G** *3/10*

U.S. Cl. 358—27 **9 Claims**

1. A D.C. controlled attenuator comprising an integrated circuit including at least four MOS field effect transistors on a common substrate, said transistors including at least first and second n-channel and at least first and second p-channels transistors each having drain, source and gate electrodes, said first n-channel and p-channel transistors being connected in complementary symmetry with said gate electrodes thereof being connected together, said drain electrodes thereof being connected together and a source of D.C. potential connected between said source electrodes thereof, said n-channel and p-channel transistors being connected in complementary symmetry with said gate electrodes thereof being connected together, said drain electrodes thereof being connected together, and said source of D.C. potential being connected between said source electrodes thereof, a first variable resistor connected between said gate electrodes of said first transistors and said drain electrodes of said first transistors providing a first feed signal path, a second variable resistor connected between said gate electrodes of said second transistors and said drain electrodes of said second transistors providing a second feed forward signal path, means for supplying a first input signal to said

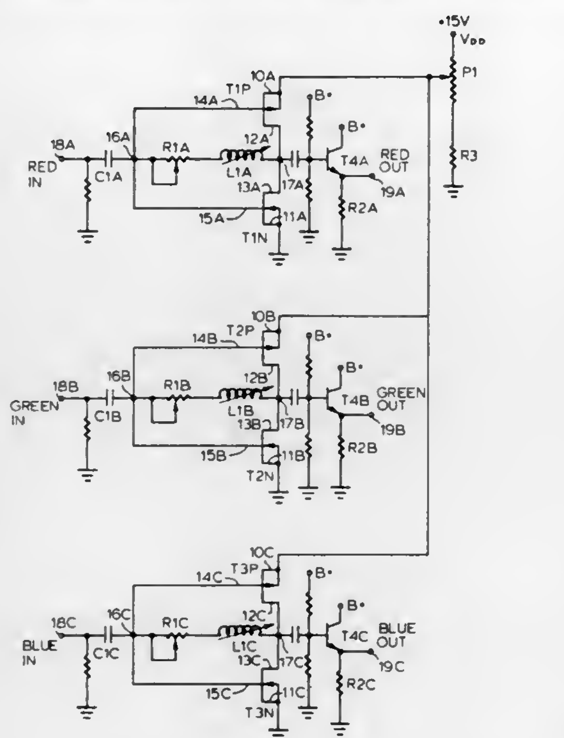

gate electrodes of said first transistors, means for supplying a second input signal to said gate electrodes of said second transistors, and means for varying the magnitude of the D.C. potential of said source of D.C. potential.

4,062,043

APPARATUS FOR DISTRIBUTING LIGHT SIGNALS AMONG A PLURALITY OF RECEIVERS

Güenter Zeidler, Unterpfaffenhofen, and Franz Auracher, Munich, both of Germany, assignors to Siemens Aktiengesellschaft, Berlin & Munich, Germany

Filed Mar. 25, 1975, Ser. No. 561,843

Claims priority, application Germany, Mar. 28, 1974, 2415046

Int. Cl.² H04N *7/18;* **H04B** *9/00*

U.S. Cl. 358—86 **2 Claims**

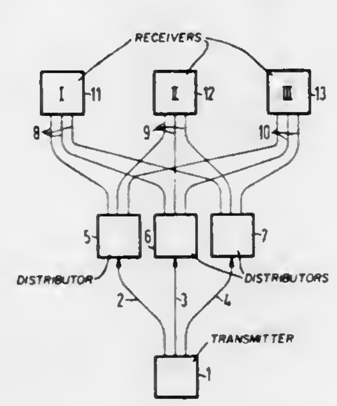

2. Apparatus for the distribution of light signals from at least one laser transmitter to a plurality of receivers for the distribution of television programs among a plurality of television receivers comprising a diode having a light emitting surface, a plurality of light wave guide cross-sections having a total area no greater than the area of said light emitting surface, a plurality of optical receivers, and a plurality of light wave guides corresponding in number to the number of said light wave guide cross-sections for operatively interconnecting said laser transmitter and said optical receivers, the ends of said light wave guides which are operatively connected to said diode being disposed in close side-by-side relation to one another and in close proximity to the light emitting surface of said diode.

4,062,044

COLOR TELEVISION RECEIVER EMPLOYING ELASTIC SURFACE WAVE FILTER

Kentaro Hanma, Yokohama, and Gentaro Miyazaki, Fujisawa, both of Japan, assignors to Hitachi, Ltd., Japan

Filed Feb. 6, 1976, Ser. No. 655,854

Claims priority, application Japan, Feb. 7, 1975, 50-15353; Feb. 14, 1975, 50-17893; Feb. 14, 1975, 50-17895; Feb. 19, 1975, 50-19737; Feb. 19, 1975, 50-19738; Feb. 19, 1975, 50-19739

Int. Cl.² H04N *9/535*

U.S. Cl. 358—21 **16 Claims**

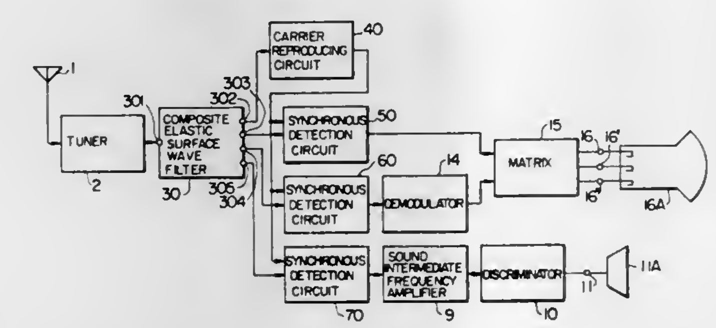

1. A color television receiver employing an elastic surface wave filter comprising:

a color television signal source producing a color television signal modulated by a color picture signal including a luminance signal and color-difference signals, said signal source including intermediate frequency signal generating means for generating a picture intermediate frequency signal including the picture carrier in response to the application of said color television signal thereto;

a substrate of material permitting propagation of an elastic surface wave;

first transducer means disposed on said substrate and connected to said color television signal source for converting said color television signal into an elastic surface wave;

second transducer means disposed on said substrate for converting said elastic surface wave into a first electrical signal including the luminance signal of picture intermediate frequency but not including the color-difference signals of picture intermediate frequency in response to the application of said elastic surface wave appearing from said first transducer means and propagating toward it on said substrate;

third transducer means disposed on said substrate for converting said elastic surface wave into a second electrical signal including the color-difference signals of picture intermediate frequency but not including the luminance signal of picture intermediate frequency in response to the application of said elastic surface wave appearing from said first transducer means annd propagating toward it on said substrate;

luminance signal generating means connected to said second transducer means for generating the luminance signal by detecting the electrical signal output of said second transducer means; and

color-difference signal generating means connected to said third transducer means for generating the color-difference signals by detecting the electrical signal output of said third transducer means;

wherein fourth transducer means is disposed on said substrate for converting said elastic surface wave applied from said first transducer means thereto into a third electrical signal including solely the picture carrier of picture intermediate frequency and not including the luminance signal and color-difference signals of picture intermediate frequency, and wherein said color-difference signal generating means generates the color-difference signals by detecting said second electrical signal utilizing said third electrical signal.

4,062,045

THREE-DIMENSIONAL TELEVISION SYSTEM

Waro Iwane, Sapporo, Japan, assignor to The President of Hokkaido University, Hokkaido, Japan

Filed Feb. 24, 1976, Ser. No. 660,647

Claims priority, application Japan, June 2, 1975, 50-65431

Int. Cl.² H04N *9/54*

U.S. Cl. 358—88 **16 Claims**

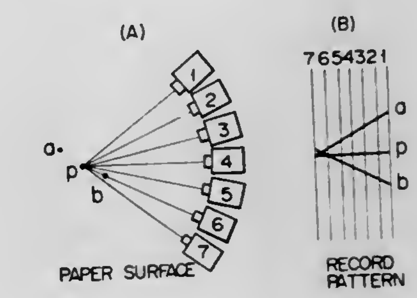

7. A three-dimensional television system comprising a multiple image photographing and transmitting apparatus including:

a multiple image camera means for photographing an object to be photographed at a plurality of different planes to obtain a multiple picture image for each different plane;

angular division distribution pattern forming means for forming an angular division distribution pattern by connecting respective points of each said image obtained by said multiple image camera means which correspond to the same specific points of said object for each different plane; and

transmitting means for classifying for transmission said angular division distribution pattern into at least brightness signals and depth signals.

11. A three-dimensional television system comprising a monocular photographing and transmitting apparatus including:

a monocular camera for photographing an object to be photographed at a plurality of different planes to obtain a picture image for each different plane;

angular division distribution pattern forming means for forming an angular division distribution pattern by connecting respective points of each said image obtained by said monocular camera which correspond to the same specific points of said object for each different plane; and

transmitting means for classifying for transmission said angular division distribution pattern into at least brightness signals and depth signals.

4,062,046

LASER MACHINING

Norman Leslie Pratt, 67 Sunningdale Drive, Daventry, Northants, and Michael Bowen Davies, 2 Palmers Close, Hillmorton, Rugby, both of England

Filed Nov. 5, 1976, Ser. No. 739,279

Claims priority, application United Kingdom, Nov. 21, 1975, 48060/75

Int. Cl.² H04N *7/18*

U.S. Cl. 358—93 **5 Claims**

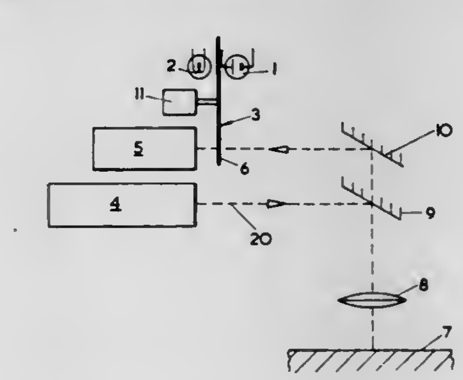

1. A closed circuit television system for viewing the pulsed

laser beam machining of a workpiece said system including a TV camera tube which, in use, is pointed at the area of incidence of the laser beam on said workpiece, a rotary shutter in the optical path of said TV camera tube for intercepting intermittenly the light passing along said optical path, and means for synchronising the pulsing of the laser and the rotation of said shutter so that, in use, said shutter prevents light from reaching said TV camera tube each time said laser is pulsed.

4,062,047
APPARATUS FOR MAGNETIC TAPE HEAD ALIGNMENT
Harvey Ronald Scull, Wheaton, Ill., assignor to Bell Telephone Laboratories, Incorporated, Murray Hill, N.J.
Filed Sept. 1, 1976, Ser. No. 719,586
Int. Cl.² G11B *5/02*
U.S. Cl. 360—26 **20 Claims**

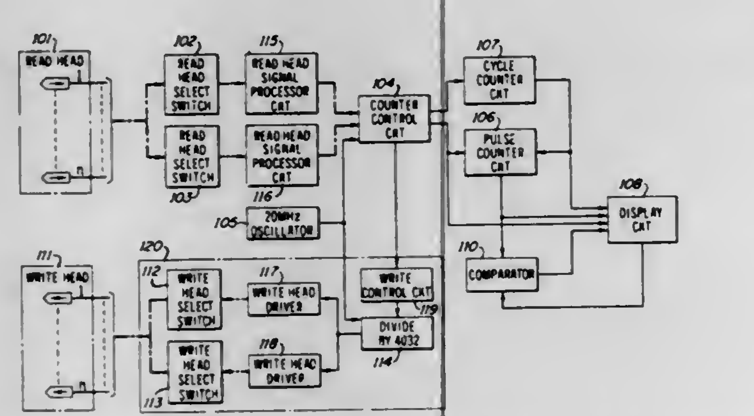

1. Apparatus for measuring tape head skew in a multiple track magnetic tape recording system by measuring the elapsed time between the occurrence of corresponding peaks of substantially identical alternating output signals read from two tracks of a magnetic recording tape, comprising:
- first and second signal processor means for generating signals indicative of the level and signals indicative of the peaks of the output signals read from the two tracks;
- first and second means for selectively connecting said output signals read from any one of a plurality of tracks to said first and second signal processor means respectively;
- oscillator means for generating a signal comprising repetitive pulses having a repetition period which is short relative to an allowable skew period;
- counter means;
- means for gating said repetitive pulses to said counter means;
- means responsive to said signals from said first and second signal processor means for enabling said gating means during the time between the occurrence of corresponding peaks of said output signals; and
- means for displaying the contents of said counter means.

4,062,048
TAPE TIMING APPARATUS AND METHOD EMPLOYING A PHASE COMPARISON BETWEEN SEQUENTIAL PULSE TRAINS
Donald William Weber, Fremont, Calif., assignor to Ampex Corporation, Redwood City, Calif.
Filed Mar. 19, 1976, Ser. No. 668,659
Int. Cl.² G11B *15/00*
U.S. Cl. 360—72 **9 Claims**

1. Apparatus for indicating the position of recording tape, moved longitudinally by a drive mechanism, relative to a tape head, comprising, means for developing periodic electrical first pulses related to movement of the drive mechanism which is related to tape movement, means for developing periodic electrical second pulses related to longitudinal spacing of recorded information on the tape, means for producing a series of equal numbered sequences of count pulses related to said first pulses, means for beginning a new one of said sequences of said count pulses only upon the occurrence of a detected phase difference between said second pulses and said first pulses, and means for producing an indication of tape position related to the count pulse sequences, whereby the new sequences of

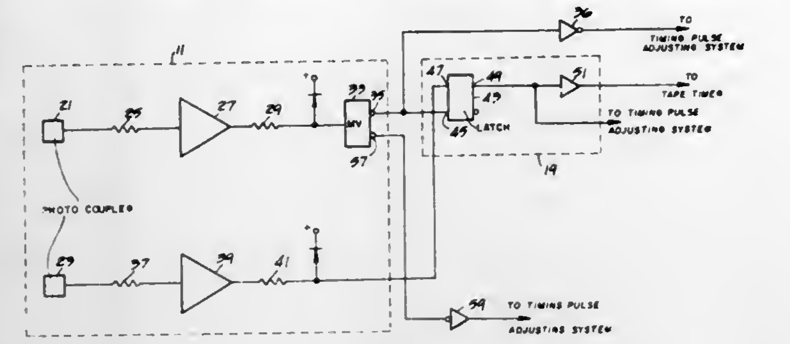

count pulses are phase shifted to coincide with the second pulses.

4,062,049
INTEGRATED DISK FILE MODULE AND MEMORY STORAGE SYSTEM
Wolfgang Gerhard Dirks, Saratoga, Calif., assignor to Burroughs Corporation, Detroit, Mich.
Filed Apr. 2, 1976, Ser. No. 673,115
Int. Cl.² G11B *5/82*
U.S. Cl. 360—78 **1 Claim**

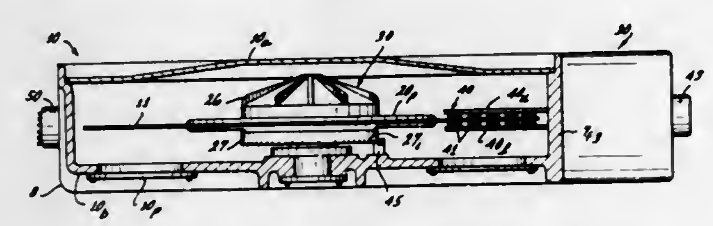

1. A completely integrated and self contained disk file module enclosed within its own sealed container comprising:
- a. a horizontal baseplate having a plurality of vertical flanges;
- b. a support frame housing a vertical spindle, said support frame mounted centrally on said horizontal baseplate;
- c. a motor comprising a stator mounted on said support frame and a rotor unit mounted on said spindle for rotation around said stator, said rotor unit supporting a magnetic disk;
- d. a magnetic disk having a central opening, said motor being integral with said disk by means of said opening;
- e. an actuator assembly mounted on one of said vertical flanges, said actuator assembly including:
  - e-1. a voice-coil supporting upper and lower head-support arms;
  - e-2. said upper and lower head support arms supporting a plurality of upper and lower transducer heads adjacent both planar surfaces of said magnetic disk;
  - e-3. means to control the position of said transducer means in relation to the plane surfaces of said magnetic disk, said means including:
    - e-3-a. a rotary solenoid mounted adjacent one end of said voice-coil;
    - e-3-b. a rotatable cam mounted at the opposite end of said voice-coil;
    - e-3-c. a central rotatable rod connecting said rotary solenoid and said rotatable cam;
    - e-3-d. upper and lower pivot pins, located opposite from said solenoid-end of said voice-coil, said pivot pins rotatably supporting said upper and lower head-support arms, whereby activation of said rotary solenoid will rotate said cam to cause clockwise rotation of said upper head-support arm and to cause counter-clockwise rotation of said lower head-support arm to respectively move said upper and lower transducing heads out of and into transducing position with respect to the surfaces of said magnetic disk.

4,062,050
MAGNETIC CARD READER
Youjiro Shigemori; Yoshio Mitumori, and Toshiaki Yonezawa, all of Shizuoka, Japan, assignors to Star Seimitsu Kabushiki Kaisha, Japan
Filed Mar. 19, 1976, Ser. No. 668,406
Claims priority, application Japan, Mar. 20, 1975, 50-36538[U]
Int. Cl.² G11B *15/60, 15/12, 19/02*
U.S. Cl. 360—130 **10 Claims**

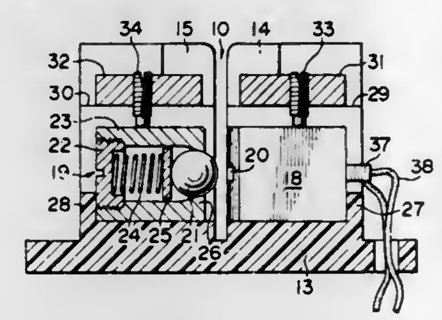

1. In a card reader, for cards having a coded region formed of a magnetic medium, comprising a body defining a guide slot of a width which permits a card to be passed therethrough, and a transducer located adjacent to the guide slot for reading information recorded on a card as the card passes through the guide slot: the improvement which comprises backup means disposed on the opposite side of the guide slot as said transducer and in an opposing relationship with the transducer for maintaining a card passing through the slot adjacent said transducer as the card passes said transducer, said backup means including a ball head having a generally spherical surface which is normally biased into its operative position directly across the slot from said transducer at which it extends into the guide slot to define a gap between said generally spherical surface and said transducer of a length which is less than the thickness of the card, said backup means further including spring means for biasing the ball head into its operative position, and support means for normally maintaining the ball head in its operative position and for permitting the ball head to move away from the transducer against the resilience of the spring means while urging the card against the transducer as the card is moved through the guide slot.

4,062,051
BATTERY SPARK SUPPRESSION CIRCUIT
Frederick L. Way, 3540 Swenson St., Apt. No. 124, Las Vegas, Nev. 89109
Filed Apr. 7, 1976, Ser. No. 674,829
Int. Cl.² H02H *7/22*
U.S. Cl. 361—6 **5 Claims**

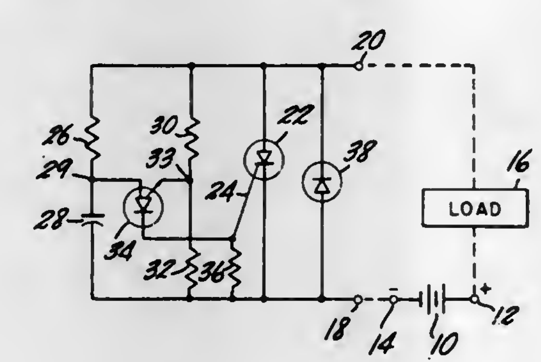

1. A circuit for suppressing arcing upon connection or disconnection of a load to a direct current source, comprising:
- a silicon controlled rectifier, having first and second terminals and a control input, for permitting current to flow in a forward direction between said terminals in response to a signal applied to said control input, said rectifier being connected to cease conducting on interruption of said forward current;
- and automatic electronic control means connected across said terminals, and responsive to forward voltage applied across said terminals for applying a triggering signal to said control input a selected time after said voltage is applied;

whereby when said first terminal is connected to a first pole of the current source, and the load is connected between said second terminal and a second pole of the current source, a voltage is applied across said terminals causing said control means to apply a triggering signal to said control input, thereby permitting current to flow through said controlled rectifier, and when said current is interrupted, said controlled rectifier ceases to conduct said current.

4,062,052
CIRCUIT BREAKER WITH IMPROVED DELAY
George S. Harper, and Lyal N. Merriken, both of Cambridge, Md., assignors to Airpax Electronics, Inc., Cambridge, Md.
Continuation-in-part of Ser. No. 532,645, Dec. 13, 1974, Pat. No. 3,959,755. This application May 7, 1976, Ser. No. 684,232
The portion of the term of this patent subsequent to May 25, 1993, has been disclaimed.
Int. Cl.² H02H *7/08;* **H01H** *7/00*
U.S. Cl. 361—28 **17 Claims**

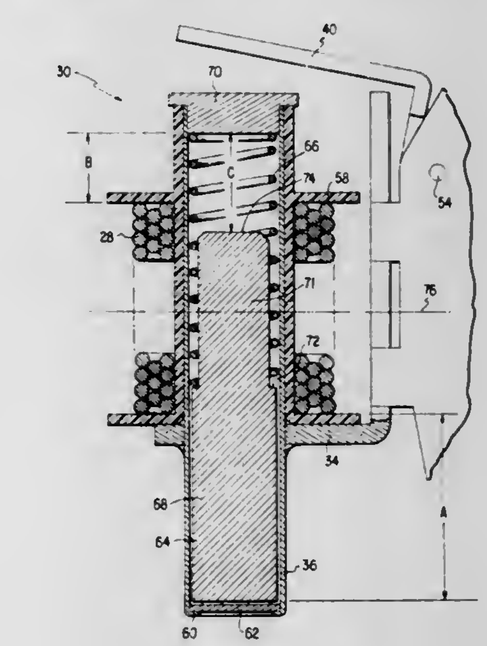

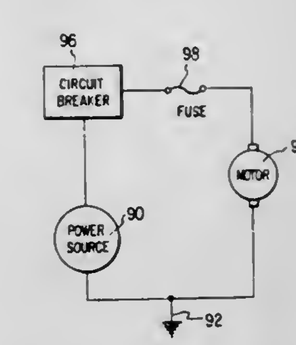

1. A circuit breaker comprising a pair of electrical contacts, a handle, a collapsible toggle coupling said handle to one of said contacts, a movable armature having a portion adapted to engage and trip said toggle, a frame, a hollow delay tube carried by said frame and having a magnetic pole piece at one end, a magnetic core movable in said delay tube, a trip coil surrounding a portion of said trip tube, said coil being spaced from the plane of the near end of said pole piece by a non-conductive, non-magnetic gap having a length of from about one-fifteenth to about one-sixth the overall interior length of said delay tube, and spring means in said delay tube normally biasing said core into a position away from said pole piece, said core when in said position extending from the end of said delay tube remote from said pole piece to a point short of a plane containing the electrical center of said trip coil.

4,062,053
PROTECTOR MODULE
Casimir Cwirzen, Wheeling, Ill., assignor to Cook Electric Company, Morton Grove, Ill.
Filed Dec. 22, 1975, Ser. No. 642,914
Int. Cl.² H02H *7/20*
U.S. Cl. 361—119 **15 Claims**

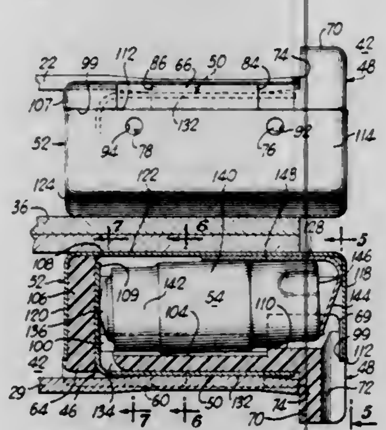

1. A protector module for use in a protection system, said protector module comprising:
an elongated insulating base having first and second elongated, opposing sides, said first side having a channel means therein and said second side having receiving surfaces,
a line contact means disposed in said channel means and extending through said base to said second side,
an arrester disposed on said receiving surfaces and having one electrode coupled to said line contact means and having another electrode, and
a conductive case means disposed on said second side of said base such that said arrester is enclosed in a closed cavity formed by said base and said case means, said case means being coupled to said other electrode of said arrester.

4,062,054
MULTI-FUNCTION FAIL-SAFE ARRANGEMENTS FOR OVERVOLTAGE GAS TUBES
Frank L. Simokat, Babylon, N.Y., assignor to TII Corporation, Lindenhurst, N.Y.
Filed Aug. 31, 1976, Ser. No. 719,076
Int. Cl.² H02H *3/22*
U.S. Cl. 361—119 **9 Claims**

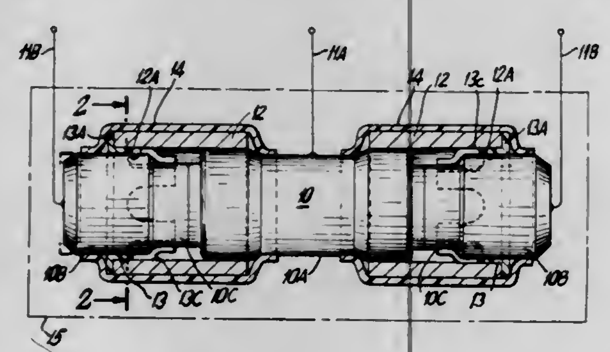

1. A unitary circuit breaker module having backup and fail-safe features comprising:
1. a gas tube surge arrestor containing a sealed gas filled ionizable gap defined by first and second sections of said tube, said sections being insulated from each other and at least one of said sections including an electrode;
2. backup air gap means connected in parallel with said ionizable gap and in thermally responsive relation thereto, said air gap means being dimensioned to provide backup protection for said ionizable gap;
3. said air gap means also including fusible means for shorting said ionizable gap in the event of a sustained surge.

4,062,055
LOAD MONITORING SYSTEM WITH HIGH AND LOW LOAD CONTROL
William P. Dybel, and Frank R. Dybel, both of 981 Wingate Road, Olympia Fields, Ill. 60461
Filed Oct. 17, 1975, Ser. No. 623,484
Int. Cl.² H01H *47/32*
U.S. Cl. 361—160 **30 Claims**

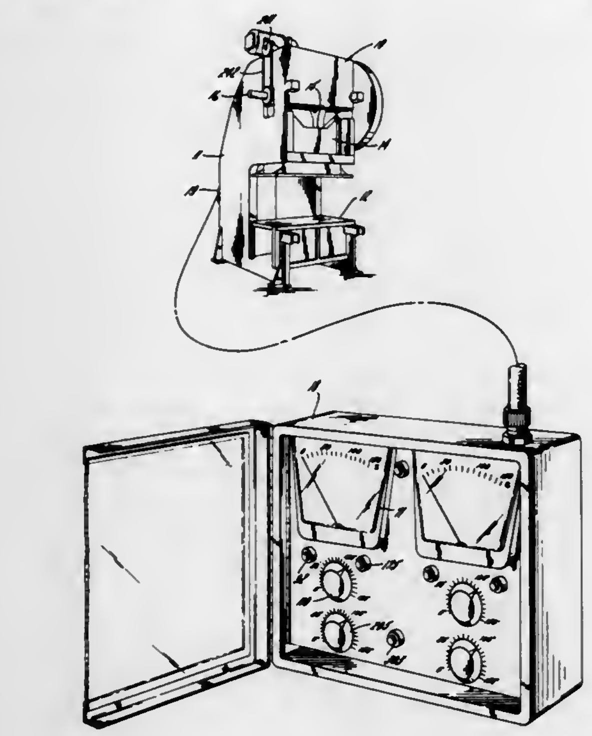

1. A system for monitoring loads that are cyclically applied to a force carrying member comprising mounting means fixed to said member substantially in line with the stress to be detected, a transducer interposed between said mounting means and having a pair of output terminals with a piezoelectric crystal therebetween for providing at said output terminals an electrical signal substantially proportional to the stress applied to said member, load detector means for providing an output indication upon activation, detector control means coupled to said transducer terminals, means for selectively establishing a reference voltage at said control means, said control means being actuated during a loading cycle when the transducer signal to said control means exceeds said reference voltage by a predetermined amount, and means responsive to the failure of said control means to be actuated during a loading cycle for activating said load detector means.

4,062,056
MULTIPLE CODE ELECTRONIC COMBINATION DOOR LOCK
David E. Goodrich, 3327 Winthrop Ave., Suite 157, Fort Worth, Tex. 76116
Filed June 23, 1975, Ser. No. 589,796
Int. Cl.² E05B *49/00*
U.S. Cl. 361—172 **17 Claims**

1. An electronic combination lock for a door separating a non-secure and secure area comprising:
a plurality of operator actuable signal switches for generating signals corresponding to a selected code, each signal switch bearing different indicia;
sequence detector means, having a plurality of stages equal to the number of digits in the code, for providing a signal only if each stage receives a signal in proper sequential order;
a first selector means for selecting a first code and transmitting a signal from each of the signal switches selected to be within the first code to the sequence detector means;
a second selector means for selecting a second code and transmitting a signal from each of the signal switches selected to be within the second code to the sequence detector means;
a third code circuit means for transmitting a signal from each of the signal switches set within the third code to the sequence detector;
means for selectively activating either the first selector means, the second selector means, or the third code circuit means to be responsive to the generation of signals by the signal switches selected within each respective code; and

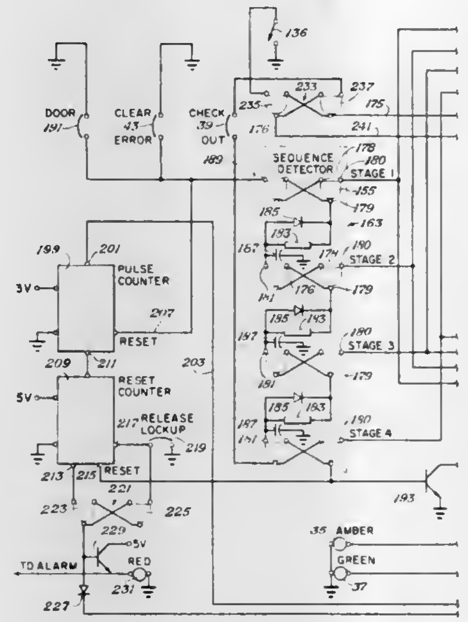

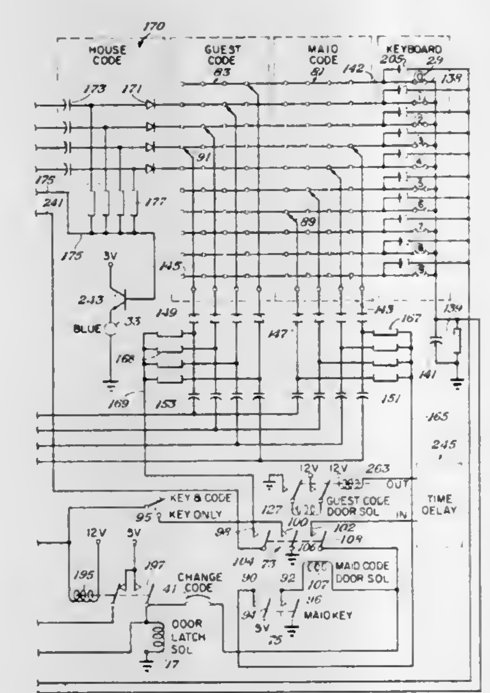

an electrically actuated control means connected to the output of the sequence detector means for allowing the door to open in response to signal from the sequence detector.

4,062,057
REGULATED POWER SUPPLY HAVING A SERIES ARRANGEMENT OF INVERTERS
Donald W. Perkins, Dewitt, N.Y., and Marvin W. Smith, Roanoke, Va., assignors to The United States of America as represented by the Secretary of the Navy, Washington, D.C.
Filed Apr. 15, 1977, Ser. No. 788,103
Int. Cl.² H02M *3/335*
U.S. Cl. 363—71 **4 Claims**

1. In an A.C.-to-D.C. regulated power supply of the type utilizing inverters in its operation, the combination of
the source of A.C. voltage;
means for rectifying said A.C. voltage so as to develop a D.C. voltage of a predetermined magnitude across a pair of lines;
a pair of inverters having their inputs connected in series across said lines;
a pair of equal resistors connected in series across said lines;
a pair of equal capacitors connected in series across said lines;
means for connecting the junction between said capacitors to the junction between said inverters such that the input impedance of an inverter is effectively across a capacitor;

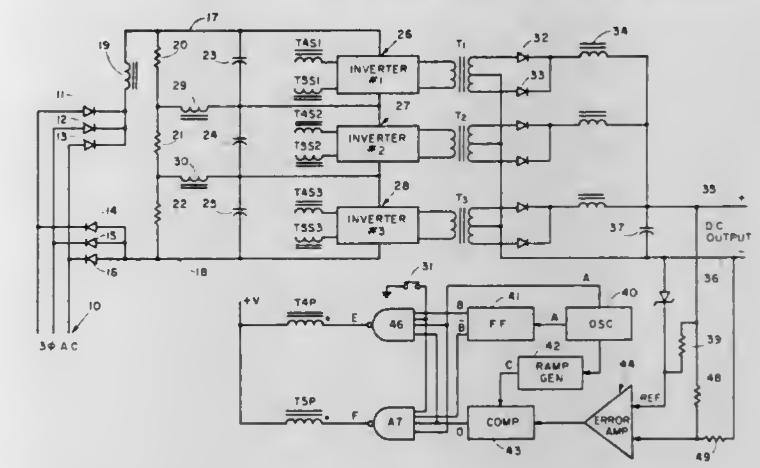

a current operated circuit disconnect means connected between the junctions of said resistors and said capacitors; and
means responsive to a current flow of a predetermined magnitude through said disconnect means for rendering said pair of inverters inoperative.

4,062,058
NEXT ADDRESS SUBPROCESSOR
Leonard S. Haynes, Columbia, Md., assignor to The United States of America as represented by the Secretary of the Navy, Washington, D.C.
Filed Feb. 13, 1976, Ser. No. 657,812
Int. Cl.² G06F *9/20*
U.S. Cl. 364—200 **7 Claims**

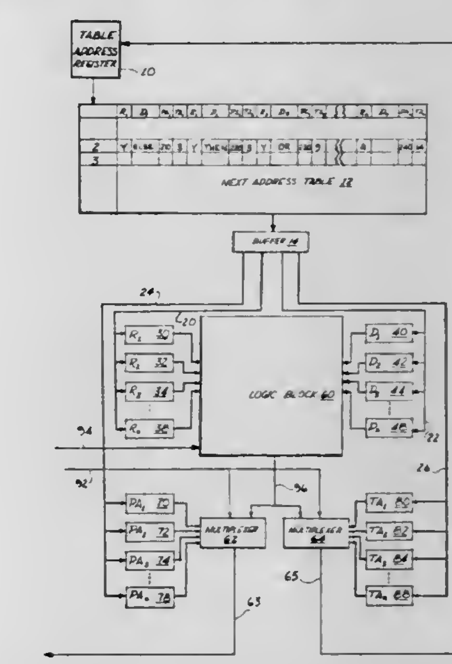

1. A method for determining the next program address of a routine controlling that portion of a digital computer dedicated to processing programs, the routine having a plurality of sets of addressed instructions, the last instruction in each set being separated from any other set by at least one branch point, each branch point having a plurality of lateral branch conditions followed by a default condition, each branch condition specifying the name of a selected one of the data registers and a literal value to be compared against the value of the specified one of the data registers, and followed affirmatively by one of the sets of instructions, and the computer having a plurality of named data registers for receiving the instructions of a program and a program counter for retaining the address of the current routine instruction, comprising the steps of:
identifying each of a plurality of multi-field table locations in an addressable table memory with a table address corre-

sponding to a different one of said branch points, the number of fields represented by each table address to exceed by at least four a quantity equal to four times the number of branch conditions at the corresponding branch point;

storing at each table address in successive fields of four, for each of the branch conditions occurring at the branch point corresponding to each table address, in order of routine execution, data corresponding to each of the branch conditions, comprising:

the name of the one of said data registers specified by the respective one of said branch conditions;

the literal value specified by the respective one of said branch conditions;

the address of the one of said routine instructions following affirmatively the respective said branch condition; and,

the address of the branch point first following the one of said routine instructions following affirmatively the respective one of said branch conditions;

storing at each table address in the field-of-four next succeeding those filled by the preceding step with data for the corresponding branch point, comprising:

a default que word;

a logically blank word;

the address of the one of said routine instructions following the default condition of the corresponding branch point; and,

the address of the branch point first following the one of said routine instructions following the default condition of the corresponding branch point;

initiating execution of a current set of said routine instructions;

loading a program into said data registers according to the order of said routine;

comparing at the table address corresponding to the branch point following the set of routine instructions for which execution has been last initiated, in each of successive fields-of-four, beginning with the first field-of-four and continuing until an affirmative comparison is made, the value of the data register having its name stored with the literal value;

comparing the value of the data register having its name stored with the literal value stored in each of successive fields-of-four at the table address corresponding to the branch point following the set of routine instructions for which execution has been last initiated, beginning with the first field of four and continuing until an affirmative comparison is made;

transferring to a plurality of memory means the addresses stored in the last of said fields-of-four in which said said step of comparing occurs;

continuing execution of said current set of routine instructions until the last instructions of said current set of said routine instuctions is completed;

loading into said program counter the one of said addresses stored in said plurality of memory means and corresponding to one of said instructions upon execution of said last instruction of said current set of routine instructions; and,

initiating execution of the set of routine instructions beginning with that one of said instructions corresponded by the address currently in said program counter.

4,062,059
INFORMATION PROCESSING SYSTEM

Seigo Suzuki, Yokohama, and Yoshiaki Moriya, Inagi, both of Japan, assignors to Tokyo Shibaura Electric Co., Ltd., Tokyo, Japan

Filed Oct. 15, 1976, Ser. No. 732,872
Claims priority, application Japan, Oct. 15, 1975, 50-123238
Int. Cl.² G06F *13/00*
U.S. Cl. 364—200 **2 Claims**

1. An information processing system comprising first and second information processing units, a first-in first-out stack acting as a buffer and connected between said first and second information processing units, a first register connected to be set to a predetermined bit position in accordance with a programmed information from said first information processing unit for producing an interruption condition signal corresponding to said bit position, a first control circuit connected to detect the state of said first-in first-out stack for producing a state signal corresponding to the state of first-in first-out stack,

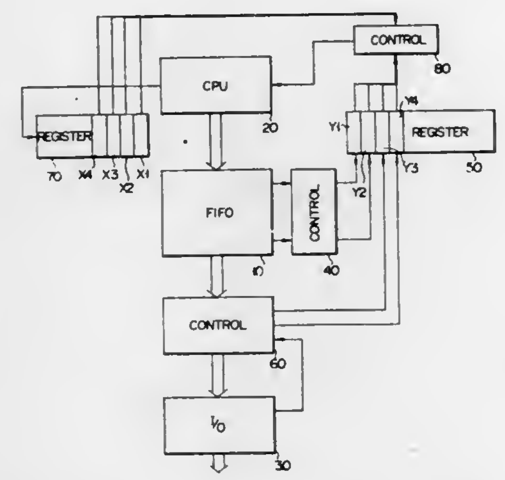

a second register connected to be set to a predetermined bit position corresponding to said state signal from said first control circuit for generating a state indicating signal, and an interruption control circuit coupled to said first and second registers and to said first information processing unit for generating an interruption control signal when said state indicating signal from said second register satisfies an interruption condition established by the bit position of said first register.

4,062,060
DIGITAL FILTER

Henri J. Nussbaumer, LaGaude, France, assignor to International Business Machines Corporation, Armonk, N.Y.

Filed Nov. 1, 1976, Ser. No. 737,631
Claims priority, application France, Nov. 10, 1975, 75.35235
Int. Cl.² G06F *15/34*
U.S. Cl. 364—724 **7 Claims**

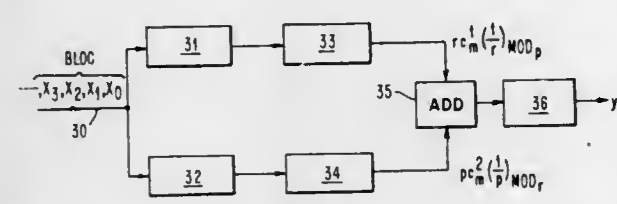

1. A digital filter for a series of samples of a signal, said filter characterized in that it includes:

an input to which the samples of the signal to be filtered are applied;

an input control means for separating said samples into data blocks of a fixed length;

at least two different circular convolution generators, each having an input receiving each of said data blocks and generating the terms resulting from the circular convolution of the samples of each said block with an associated block of coefficients defining the required filtering operation of the generator;

a product means for each circular convolution generator for multiplying the output of the associated one of said generators by a correcting term specific to the attached generator;

an adder for adding together the corresponding terms in the outputs of said two product means; and

a means for combining selected ones of the terms supplied by said adder to produce a series of samples representing the filtered signal.

4,062,061
ERROR LOG FOR ELECTROSTATOGRAPHIC MACHINES

Phillip J. Batchelor, Fairport; Robert L. Traister, Rochester; Gary A. Gray, and Joseph A. Marino, both of Fairport, all of N.Y., assignors to Xerox Corporation, Stamford, Conn.

Filed Apr. 15, 1976, Ser. No. 677,111
Int. Cl.² G06F *11/00;* **G03G** *15/00*
U.S. Cl. 364—900 **Claims**

1. In a reproduction machine for producing copies, the combination of:

control means for operating said machine to produce copies, said control means including a memory section; means for monitoring operation of said machine, said monitoring means generating a fault signal on the occurrence of a predetermined machine fault; and

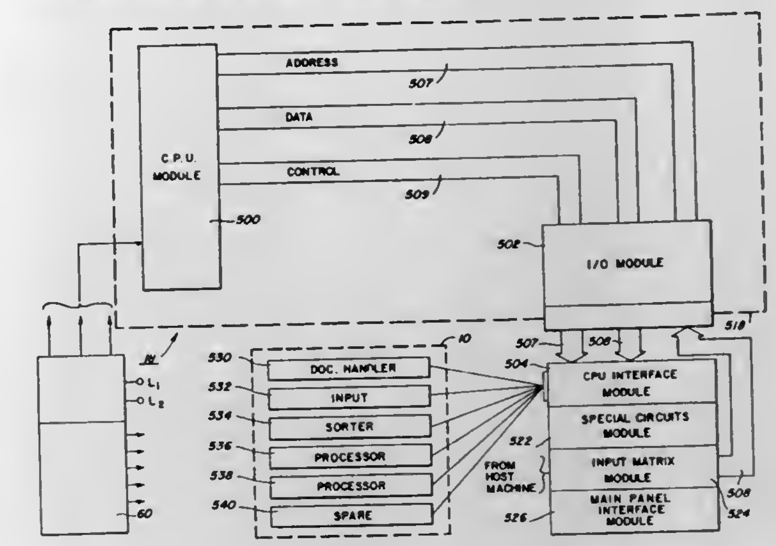

fault storing means for storing in said control means memory section each occurrence of said fault signal whereby to provide a record of the number of times said fault occurs.

DESIGNS

DECEMBER 6, 1977

246,551
SHOE SOLE
Nikolaus Hansjosten, Pluwig, and Christoph Langwara, Mertesdorf, both of Germany, assignors to Industriewerke Lemm & Co. GmbH, Trier, Germany
Filed May 19, 1976, Ser. No. 687,662
Claims priority, application Germany, Nov. 25, 1975, 14625
Term of patent 14 years
Int. Cl. D2—*04*
U.S. Cl. D2—320

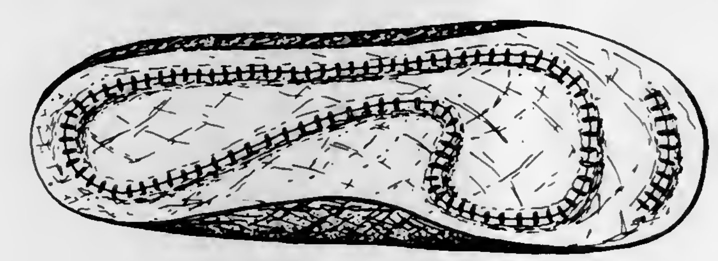

246,552
BELT BUCKLE OR SIMILAR ARTICLE
Daniel G. Baughman, P.O. Box 541, Darien, Wis. 53114
Filed Dec. 22, 1975, Ser. No. 642,746
Term of patent 14 years
Int. Cl. D2—*07*
U.S. Cl. D2—406

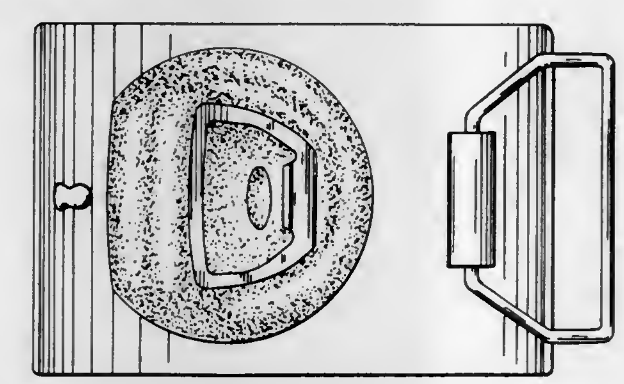

246,553
HIGH CHAIR
William Ballenger, 6030 Northwest Highway, Chicago, Ill. 60631
Filed Apr. 28, 1976, Ser. No. 680,883
Term of patent 14 years
Int. Cl. D6—*03*
U.S. Cl. D6—8

246,554
CHAIR
Morris F. Fisher, Carmel, Ind., assignor to Futorian Corporation, Amsterdam, N.Y.
Filed July 26, 1976, Ser. No. 708,666
Term of patent 14 years
Int. Cl. D6—*01*
U.S. Cl. D6—71

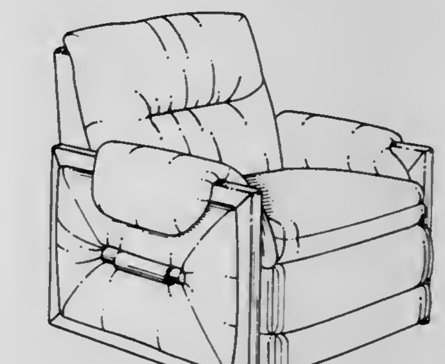

246,555
SIDE CHAIR
Harry Laylon, 259 Rider Ave., Syracuse, N.Y. 13207
Continuation-in-part of Ser. No. 431,448, Jan. 7, 1974, Pat. No. D. 237,332. This application Apr. 2, 1975, Ser. No. 564,250
The portion of the term of this patent subsequent to Oct. 28, 1989, has been disclaimed.
Term of patent 14 years
Int. Cl. D6—*01*
U.S. Cl. D6—75

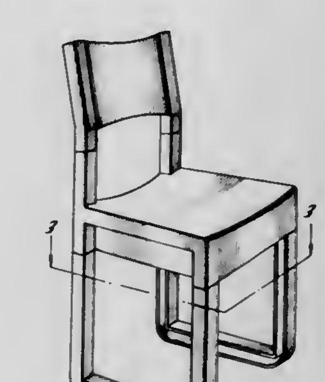

246,556
BED
Randolph C. Parsons, 645 West End Ave., New York, N.Y. 10025
Filed June 30, 1975, Ser. No. 591,620
Term of patent 14 years
Int. Cl. D6—*01*
U.S. Cl. D6—79

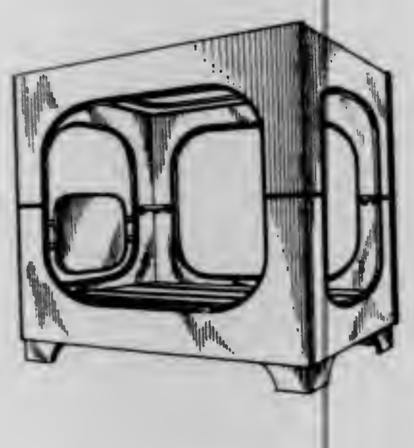

246,557
HOLDER FOR SEED PACKETS OR THE LIKE
Michael D. Gilmartin, 724 Thornhill Drive, Colma, Calif. 94015, and James A. Ginella, 564 N. San Antonio Road, Los Altos, Calif. 94022
Filed June 23, 1975, Ser. No. 589,493
Term of patent 14 years
Int. Cl. D6—*04*
U.S. Cl. D6—130

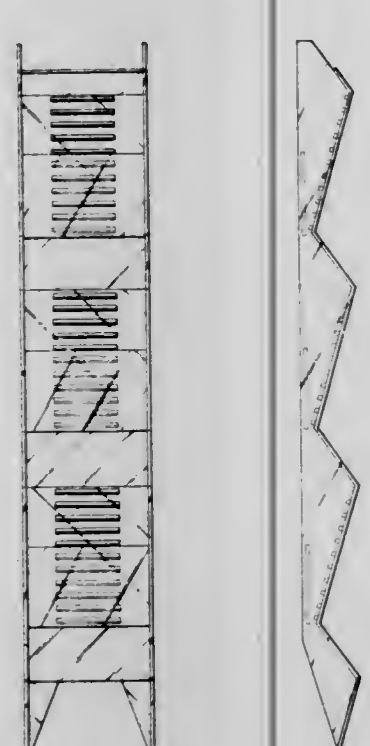

246,558
CHAIR CONTROL
Frank Doerner, 138 Aberdeen Road, Kitchener, Ontario, Canada
Filed Feb. 3, 1976, Ser. No. 654,799
Term of patent 14 years
Int. Cl. D6—*06*
U.S. Cl. D6—191

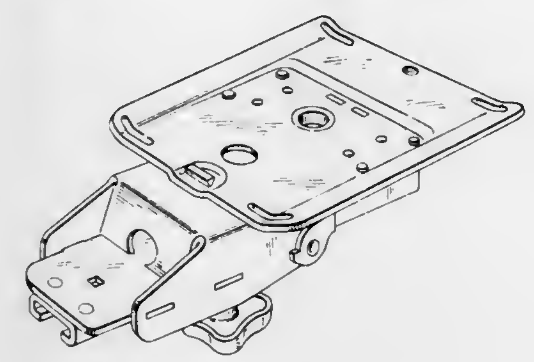

246,559
STACKABLE COLANDER
Fred S. Steiner, Woodmere, and Morison S. Cousins, Plainview, both of N.Y., assignors to Bonny Products, Inc., Hewlett, N.Y.
Filed Dec. 29, 1975, Ser. No. 644,568
Term of patent 14 years
Int. Cl. D7—*04*
U.S. Cl. D7—47

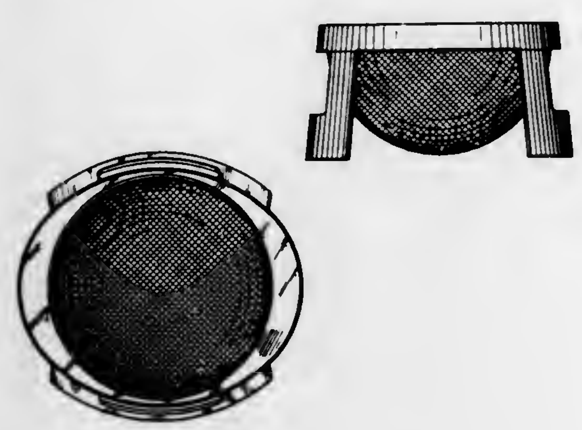

246,560
CLOSURED AND DIVIDED STORAGE BOX OR THE LIKE
Roger P. Beauchamp, 7 Stewart Court, Harrisville, R.I. 02830, and Robert F. Bateman, 35 Fanning Lane, Greenville, R.I. 02828
Filed Jan. 26, 1976, Ser. No. 652,456
Term of patent 14 years
Int. Cl. D7—*01, 07*
U.S. Cl. D7—76

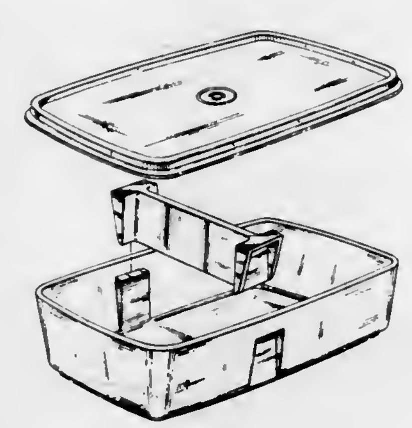

246,561
COVERED STORAGE CONTAINER
Alvin J. Stahel, Brighton, Minn., assignor to Ball Corporation, Muncie, Ind.
Filed Feb. 6, 1976, Ser. No. 655,946
Term of patent 14 years
Int. Cl. D7—*07*
U.S. Cl. D7—76

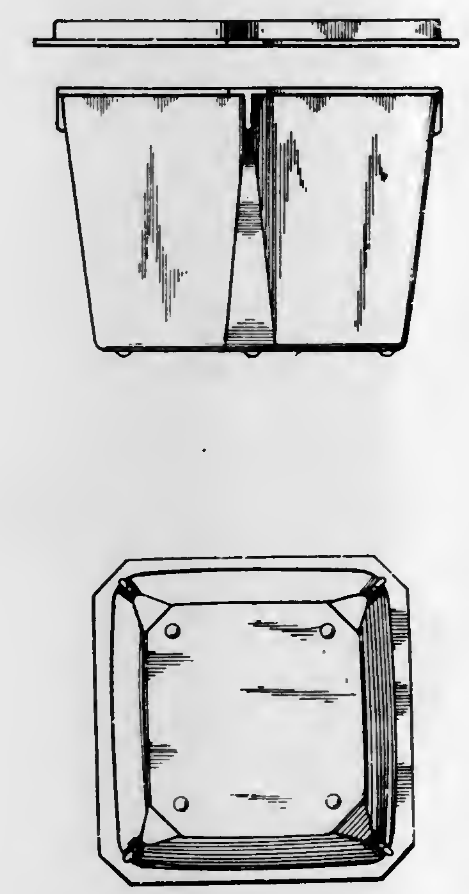

246,562
COMBINED ICE CHEST AND WINE COOLER
Ione M. Stoddard, 1501 S. Flagler Drive No. 8F, West Palm Beach, Fla. 33401
Filed Mar. 19, 1976, Ser. No. 668,779
Term of patent 14 years
Int. Cl. D7—*01*
U.S. Cl. D7—78

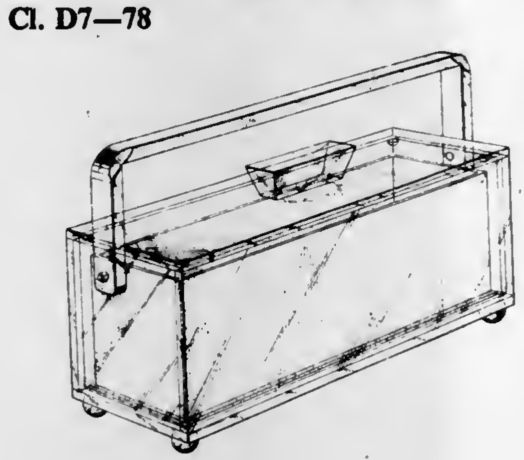

246,563
KNIFE OR A SIMILAR ARTICLE
Vivanna Torun Bulow Hube, Wolfsburg, Germany, assignor to Dansk International Designs Ltd., Mount Kisco, N.Y.
Division of Ser. No. 561,952, March 25, 1975, abandoned. This application Mar. 15, 1977, Ser. No. 777,974
Term of patent 14 years
Int. Cl. D7—*03*
U.S. Cl. D7—150

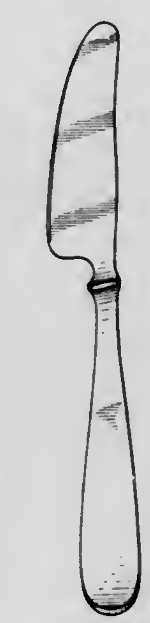

246,564
BLENDER BASE
David K. Haufe, Hinsdale, Ill., assignor to Sunbeam Corporation, Chicago, Ill.
Filed Mar. 22, 1976, Ser. No. 669,463
Term of patent 14 years
Int. Cl. D7—*04*
U.S. Cl. D7—154

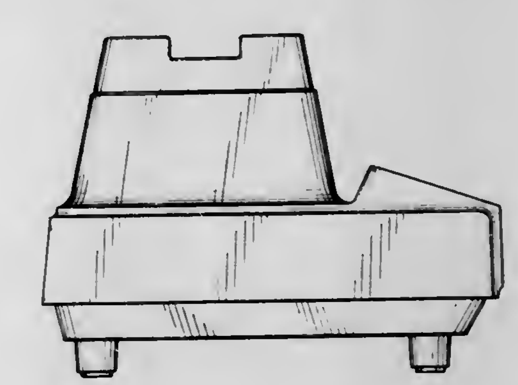

246,565
SUPPORT STAND FOR FLEXIBLE BAGS
Harry B. Roark, 2710 NE. Russell Road, Kansas City, Mo. 64117
Filed Aug. 18, 1976, Ser. No. 715,445
Term of patent 14 years
Int. Cl. D7—*99*
U.S. Cl. D7—189

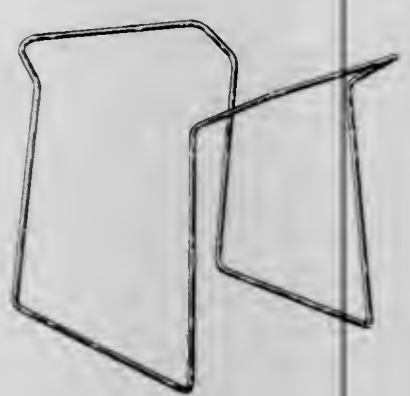

246,566
LID FOR REFUSE CONTAINER
Ralph Van Skiver, Arlington, Tex., assignor to Loma Corporation, Fort Worth, Tex.
Filed Apr. 29, 1976, Ser. No. 681,568
Term of patent 14 years
Int. Cl. D7—*05*
U.S. Cl. D7—194

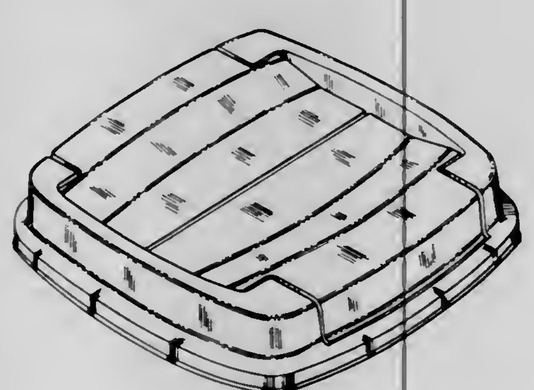

246,567
MULTI-PURPOSE TOOL
Melvin D. Bricker, 107 Miromor Road, No. B, Alameda, Calif. 94501
Filed May 24, 1976, Ser. No. 689,108
Term of patent 14 years
Int. Cl. D8—*05*
U.S. Cl. D8—26

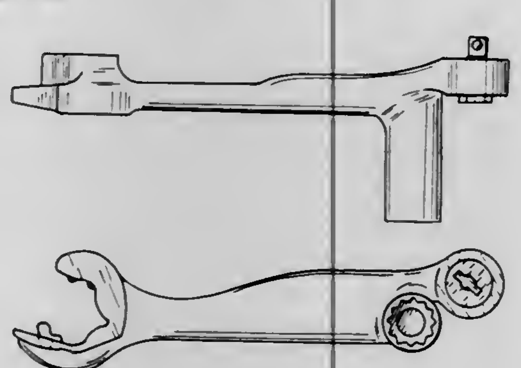

246,568
BLADE HOLDER TOOL FOR CUTTING A POUR SPOUT
Michael W. Brandt, 1111 W. Mockingbird Lane, Suite 1147, Dallas, Tex. 75247
Filed Mar. 8, 1976, Ser. No. 664,887
Term of patent 14 years
Int. Cl. D7—*99;* D8—*03*
U.S. Cl. D8—40

246,569
CEMENT FINISHING TOOL
Albert G. Wesson, 2547 Tracy, Kansas City, Mo. 64108
Filed Aug. 26, 1976, Ser. No. 717,565
Term of patent 14 years
Int. Cl. D8—*05*
U.S. Cl. D8—45

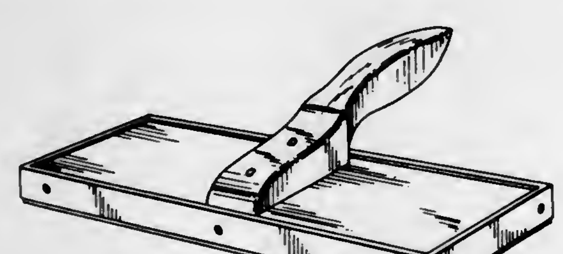

246,570
HAND-HELD TOOL FOR REMOVING INSULATION FROM ELECTRICAL CONDUCTORS
Walter N. Christiansen, Spring Lake, Mich., assignor to Gardner-Denver Company, Dallas, Tex.
Filed Sept. 27, 1976, Ser. No. 726,855
Term of patent 14 years
Int. Cl. D8—*03*
U.S. Cl. D8—98

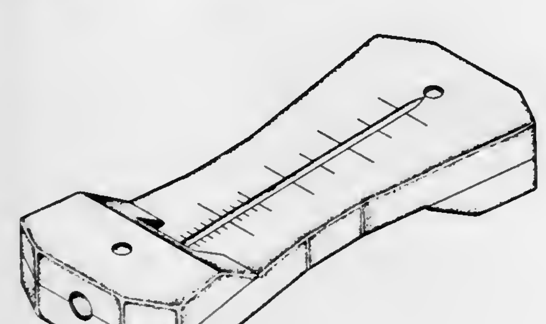

246,571
WALL PLATE
Joan Grieb, Westfield, N.J., assignor to General Electric Company
Filed Oct. 20, 1975, Ser. No. 624,089
Term of patent 14 years
Int. Cl. D8—*09*
U.S. Cl. D8—350

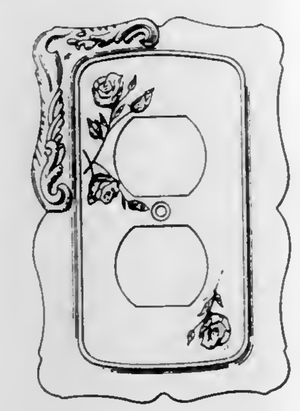

246,572
STAND FOR HOLDING A VEHICLE AIR CONDITIONER COMPRESSOR AT DIFFERENT ANGLES DURING REPAIR
Le Roy A. Walter, 2893 65th St., Sacramento, Calif. 95817
Filed Sept. 17, 1976, Ser. No. 724,715
Term of patent 14 years
Int. Cl. D8—*08*
U.S. Cl. D8—354

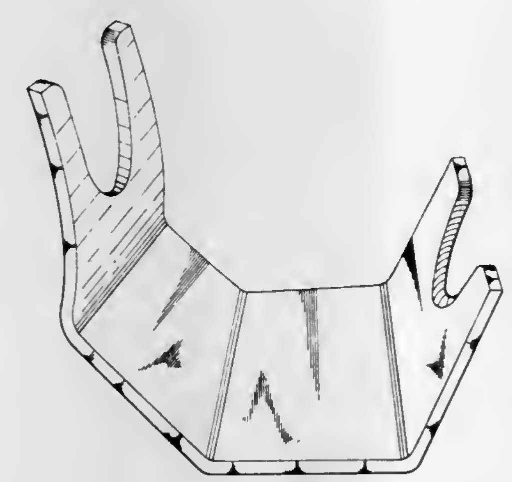

246,573
BASE BRACKET FOR SUPPORTING A BRICK VENEER WALL FROM A HOUSE FOUNDATION WALL
Donald E. White, 702 E. Pleasant View Drive, Des Moines, Iowa 50315
Filed Dec. 31, 1975, Ser. No. 645,807
Term of patent 14 years
Int. Cl. D8—*09*
U.S. Cl. D8—384

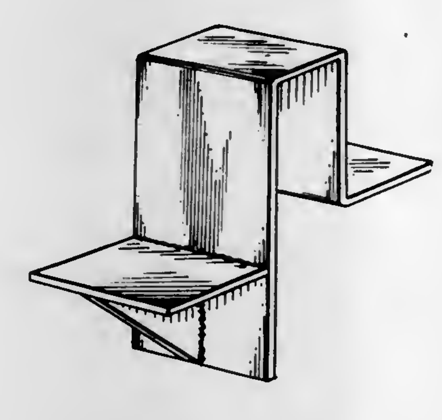

246,574
BOTTLE OR SIMILAR ARTICLE
Eugene J. Meierhoefer, Hackettstown, N.J., assignor to Warner-Lambert Company, Morris Plains, N.J.
Continuation-in-part of Ser. No. 459,134, April 8, 1974, Pat. No. Des. 238,331. This application June 4, 1975, Ser. No. 583,808
Term of patent 14 years
Int. Cl. D9—*01*
U.S. Cl. D9—67

246,575
WATCH CASE
Tsuyoshi Onodera, Urawa, and Satoshi Ishida, Tokyo, both of Japan, assignors to Kabushiki Kaisha Daini Seikosha
Filed Dec. 31, 1975, Ser. No. 645,902
Claims priority, application Japan, Jan. 7, 1975, 50-27705
Term of patent 14 years
Int. Cl. D10—*02*
U.S. Cl. D10—30

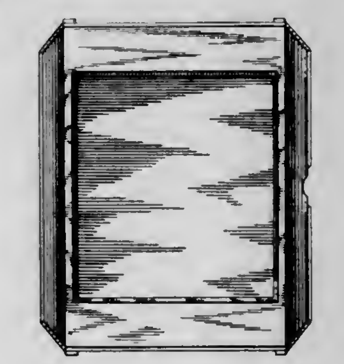

246,576
WATCH CASE
Kanji Inaba, Yokohama, Japan, assignor to Kabushiki Kaisha Daini Seikosha
Filed Jan. 2, 1976, Ser. No. 646,231
Term of patent 14 years
Int. Cl. D10—*02*
U.S. Cl. D10—30

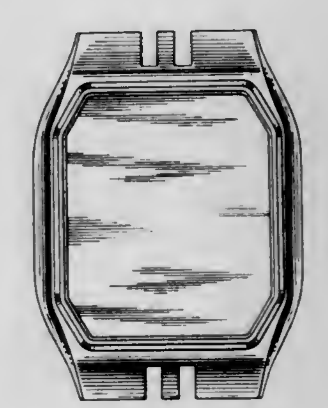

246,577
WATCH CASE
Kanji Inaba, Yokohama, Japan, assignor to Kabushiki Kaisha Daini Seikosha
Filed Jan. 2, 1976, Ser. No. 646,355
Claims priority, application Japan, July 1, 1975, 50-27703
Term of patent 14 years
Int. Cl. D10—*02*
U.S. Cl. D10—30

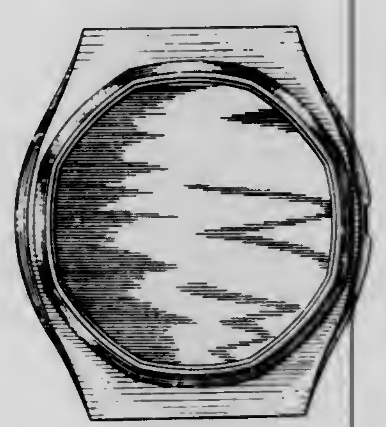

246,578
FIRE ALARM
Donald A. White, 4701 E. Kessler View, Indianapolis, Ind. 46220
Filed Feb. 9, 1976, Ser. No. 656,248
Term of patent 14 years
Int. Cl. D10—*05*
U.S. Cl. D10—106

246,579
DIAMOND RING
Josef J. Barr, 293 S. County Road, Palm Beach, Fla. 33480
Filed Mar. 30, 1976, Ser. No. 672,026
Term of patent 14 years
Int. Cl. D11—*01*
U.S. Cl. D11—34

246,580
TROPHY BASE
Richard A. Rasmussen, 3430 Olive Ave., Long Beach, Calif. 90807
Filed Apr. 14, 1976, Ser. No. 677,005
Term of patent 14 years
Int. Cl. D11—*02*
U.S. Cl. D11—157

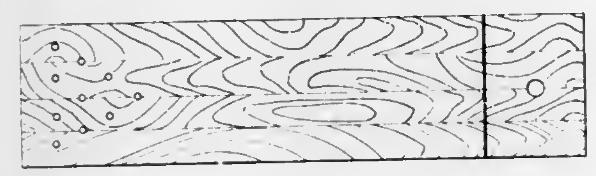

246,581
TELEPHONE CONNECTOR BLOCK GUIDE
Paul V. DeLuca, 6901 Jericho Turnpike, Syosset, N.Y. 11791
Filed Apr. 26, 1976, Ser. No. 680,239
Term of patent 14 years
Int. Cl. D13—*03*
U.S. Cl. D13—13

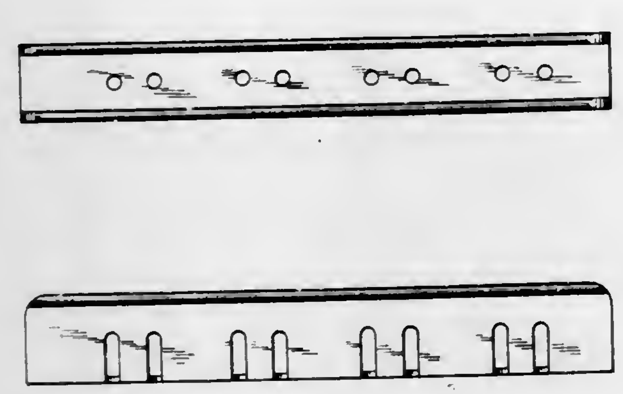

246,582
CASSETTE TAPE RECORDER
Tomoji Okada, Tokyo, Japan, assignor to General Electric Company
Filed Jan. 27, 1976, Ser. No. 652,768
Term of patent 14 years
Int. Cl. D14—*01, 03*
U.S. Cl. D14—6

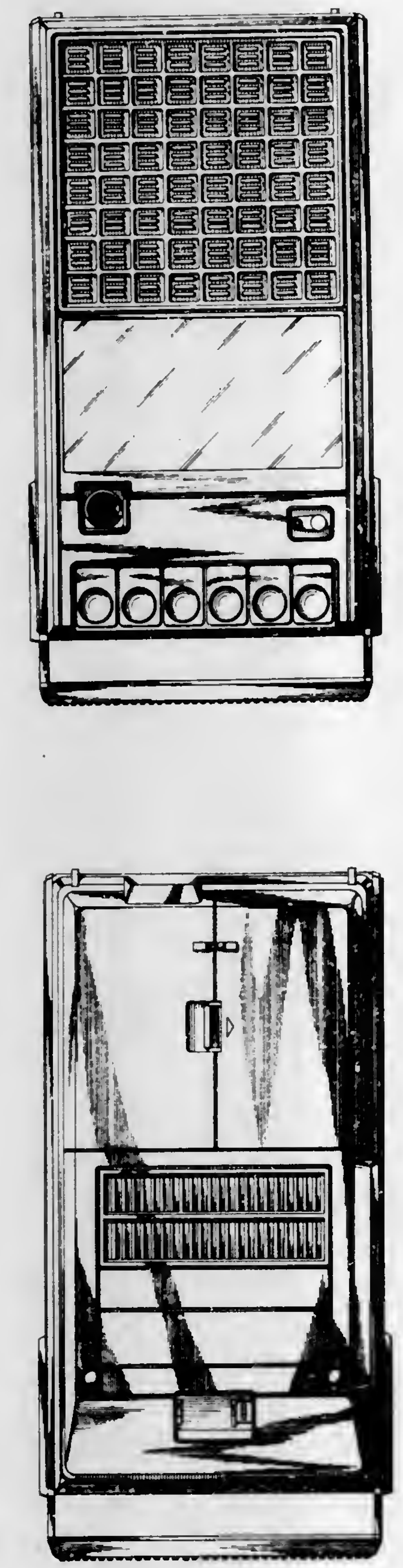

246,583
CASSETTE TAPE RECORDER
Tomoji Okada, Tokyo, Japan, assignor to General Electric Company
Filed Jan. 27, 1976, Ser. No. 652,769
Term of patent 14 years
Int. Cl. D14—*01, 03*
U.S. Cl. D14—6

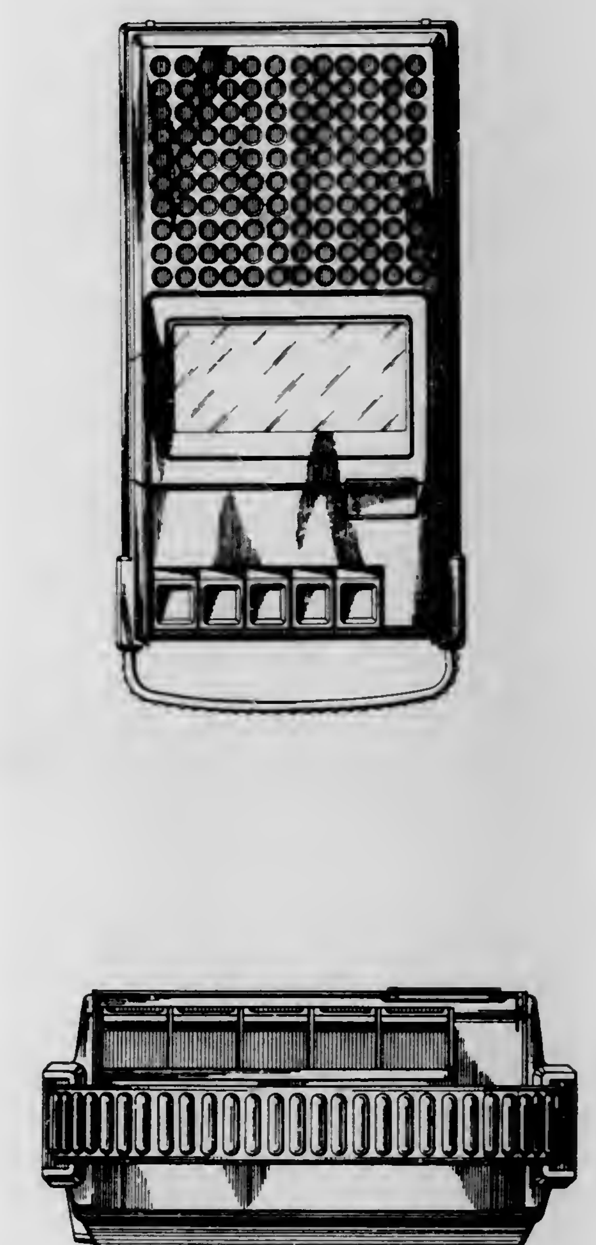

246,584
TELEPHONE STAND
Ghanshyam Ambaram Bhat, Matawan; Donald Michael Genaro, Haworth, both of N.J.; Gordon Elliot Sylvester, Jamaica, N.Y.; Edwin Watkinson, Colts Neck, and John William Wesner, Jr., Freehold Township, Monmouth County, both of N.J., assignors to Bell Telephone Laboratories, Incorporated, Murray Hill, N.J.
Filed Sept. 18, 1975, Ser. No. 614,510
Term of patent 14 years
Int. Cl. D14—*03*
U.S. Cl. D14—57

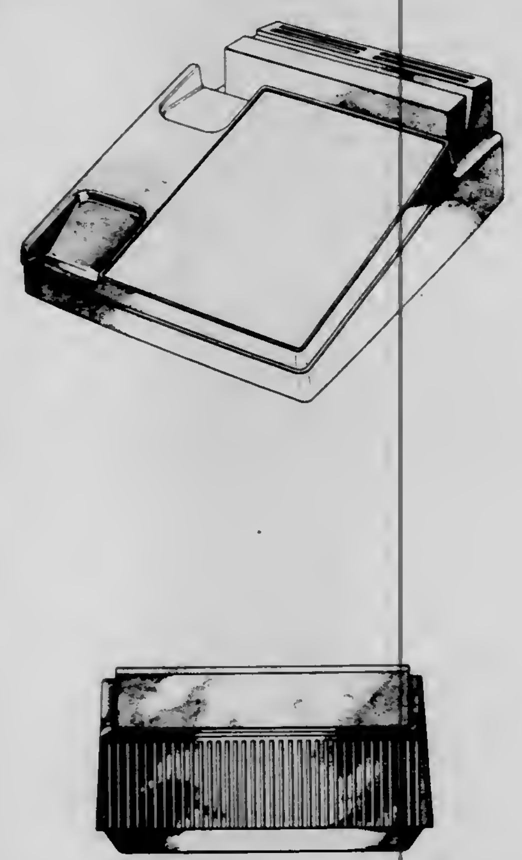

246,585
ANTENNA MOUNTING BRACKET
Alfred P. Parduhn, 14501 Wilson Road, Edmond, Okla. 73034
Filed June 1, 1976, Ser. No. 691,504
Term of patent 14 years
Int. Cl.² D14—*03, 99*
U.S. Cl. 14—91

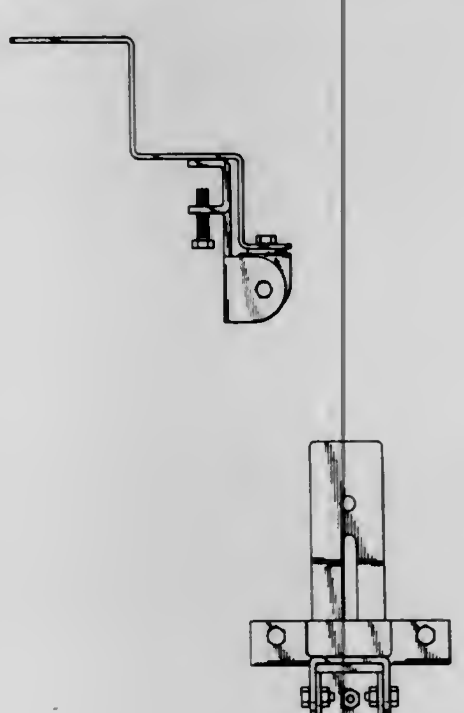

246,586
BELT GUARD FOR A ROTO-TILLER
Larry M. Cognata, 4725 Benton Smith Road, Nashville, Tenn. 37215
Filed July 26, 1976, Ser. No. 708,423
Term of patent 14 years
Int. Cl. D15—*03*
U.S. Cl. D15—12

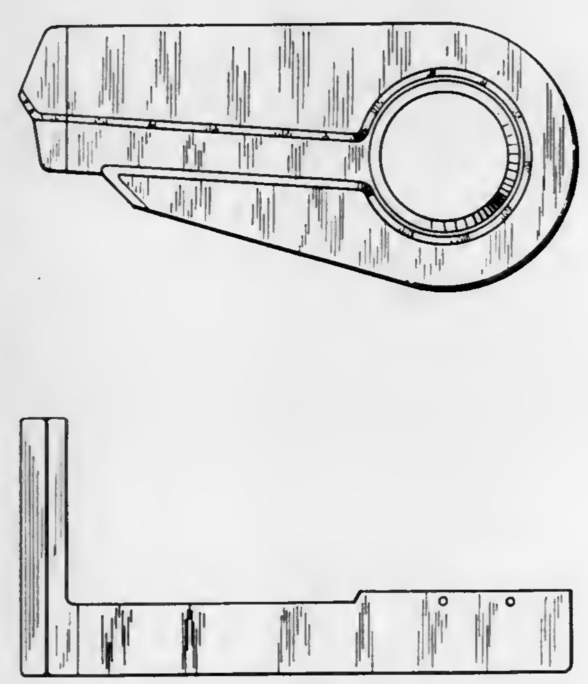

246,587
HEAD FOR A SURFACE-TREATING MACHINE
Samuel A. Miller, Livingston, N.J., assignor to Ruth Max Newman and Lester S. Max
Filed Feb. 27, 1976, Ser. No. 662,105
Term of patent 14 years
Int. Cl. D15—*99*
U.S. Cl. D15—56

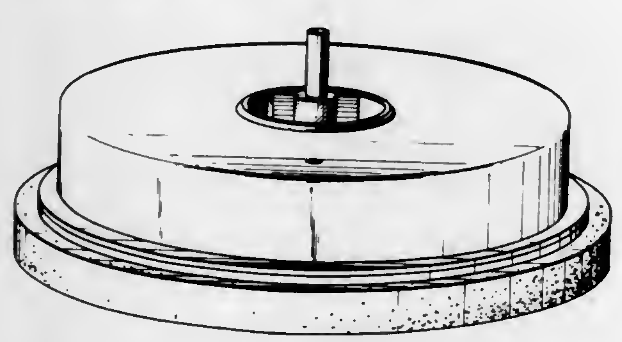

246,588
FILM DRYER
Michael J. Ferrarell, Chicago, Ill., assignor to Buckingham Graphics, Inc., Chicago, Ill.
Filed Feb. 2, 1976, Ser. No. 654,600
Term of patent 14 years
Int. Cl. D16—*05*
U.S. Cl. D16—33

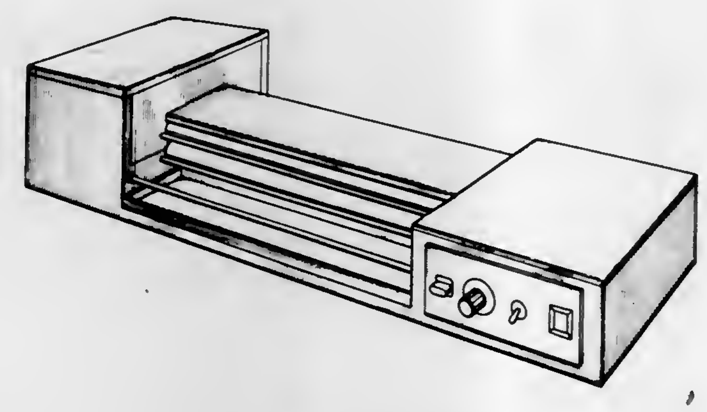

246,589
ELECTRONIC FLASH UNIT
Wilfried Höltje, and Claus Prochnow, both of Braunschweig, Germany, assignors to Rollei-Werke Franke & Heidecke, Braunschweig, Germany
Division of Ser. No. 433,532, Jan. 15, 1974, Pat. No. Des. 239,204. This application July 31, 1975, Ser. No. 600,625
Claims priority, application Germany, Aug. 13, 1973, MR 1010; Aug. 20, 1973, MR 1011
Term of patent 14 years
Int. Cl. D16—*05*
U.S. Cl. D16—42

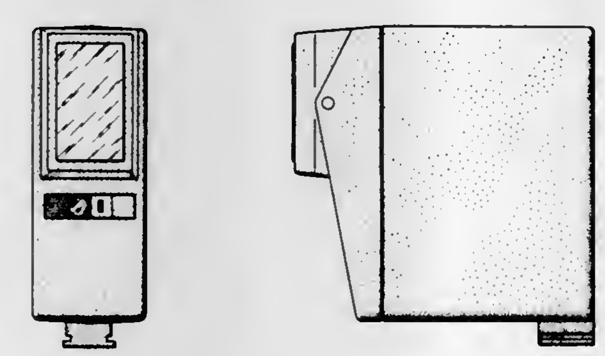

246,590
COMBINED LUGGAGE HANDLE LOOP AND CONCEALED IDENTIFICATION TAG OR SIMILAR ARTICLE
Pasquale R. Sollazzi, Newark, Del., assignor to M & M Luggage Co., Inc., Jersey City, N.J.
Filed Apr. 19, 1976, Ser. No. 678,056
Term of patent 14 years
Int. Cl. D19—*08*
U.S. Cl. D19—13

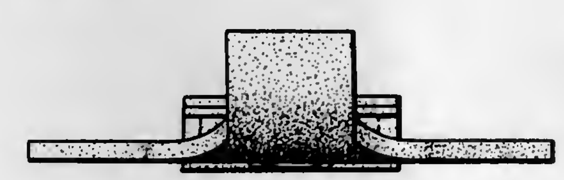

246,591
COMBINED LUGGAGE FLAP AND CONCEALED IDENTIFICATION TAG OR SIMILAR ARTICLE
Pasquale R. Sollazzi, Newark, Del., assignor to M & M Luggage Co., Inc., Jersey City, N.J.
Filed Apr. 19, 1976, Ser. No. 678,191
Term of patent 14 years
Int. Cl. D19—*08*
U.S. Cl. D19—13

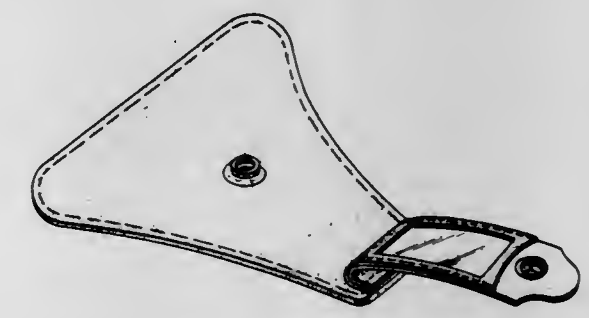

246,592
DESK SET
Walter Zeischegg, Neu-Ulm, Germany, assignor to Hans Friedrich Hefendehl, Kierspe, Germany
Filed Apr. 13, 1976, Ser. No. 676,554
Claims priority, application Germany, Oct. 15, 1975, 459
Term of patent 14 years
Int. Cl. D19—*06*
U.S. Cl. D19—75

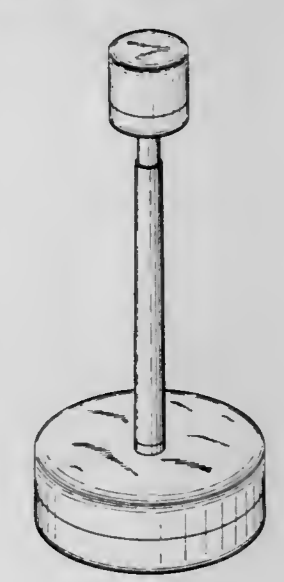

246,593
DESK TOP HANGER FOR SUSPENSION-TYPE DOCUMENT HOLDERS
Edmund T. Paquette, Shrewsbury, Mass., assignor to Wright Line Inc., Worcester, Mass.
Filed Apr. 5, 1976, Ser. No. 673,682
Term of patent 14 years
Int. Cl. D19—*02*
U.S. Cl. D19—90

246,594
INSECT TRAP
Richard E. Rice, Dinuba, Calif., assignor to The Regents of the University of California, Berkeley, Calif.
Filed Dec. 2, 1975, Ser. No. 637,075
Term of patent 14 years
Int. Cl. D22—*06*
U.S. Cl. D22—19

246,595
ARTIFICIAL FISHING LURE
William O. Williams, Jr., 1309 Lynhurst Drive, Gastonia, N.C. 28052
Filed Nov. 17, 1976, Ser. No. 743,296
Term of patent 14 years
Int. Cl. D22—*05*
U.S. Cl. D22—27

246,596
COVER FOR SOLENOID OPERATED PILOT VALVE
Daniel H. Fialkowski, and Russell J. Cameron, both of Rochester, Mich., assignors to Ross Operating Valve Company, Detroit, Mich.
Division of Ser. No. 597,832, July 21, 1975. This application Feb. 14, 1977, Ser. No. 768,077
Term of patent 14 years
Int. Cl. D23—*01*
U.S. Cl. D23—19

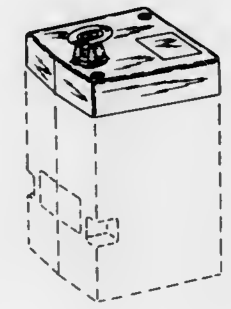

246,597
BATHTUB
Louis H. Ridgeway, R.F.D. 1, Jonesville, S.C. 29353
Filed June 17, 1976, Ser. No. 697,054
Term of patent 14 years
Int. Cl. D23—*02*
U.S. Cl. D23—55

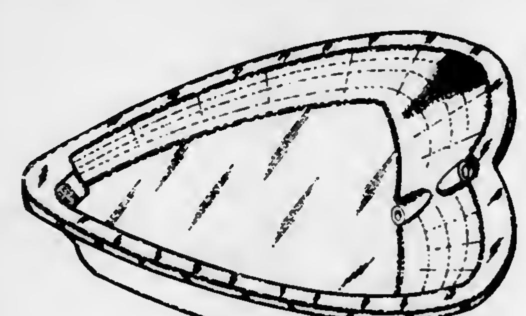

246,598
MERCURY REMOVING DEVICE FOR DENTAL AMALGAMATORS
Paul Merlin Morrison, 9004 Copenhaver Drive, Potomac, Md. 20854
Filed Jan. 2, 1976, Ser. No. 646,111
Term of patent 14 years
Int. Cl. D23—*04;* D24—*01*
U.S. Cl. D24—1.1

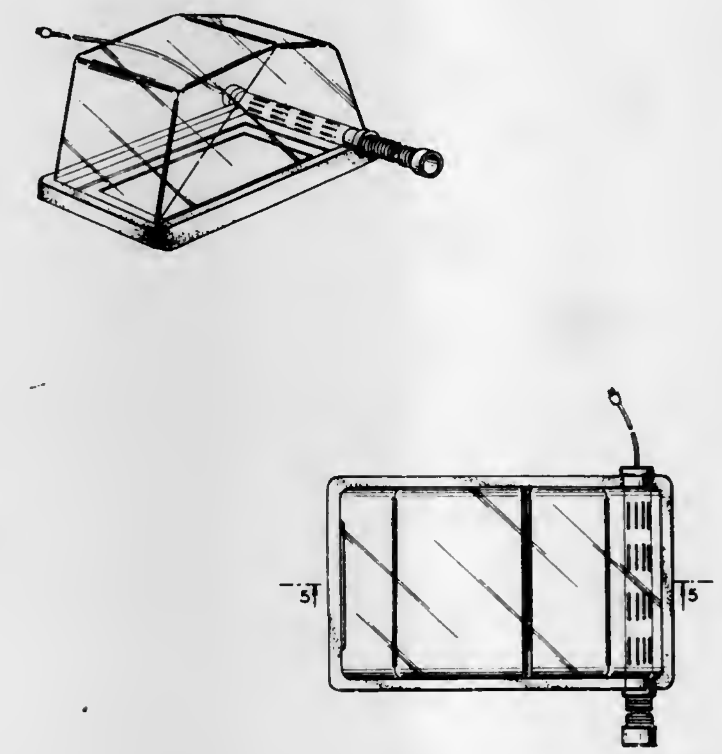

246,599
PULMONARY DIAGNOSTIC INSTRUMENT UNIT
Michael V. Ward, Creve Coeur; Allen D. Penniman, Jr., Glendale, and Richard E. Pikul, De Soto, all of Mo., assignors to Puritan-Bennett Corporation, St. Louis, Mo.
Filed July 28, 1975, Ser. No. 599,896
Term of patent 14 years
Int. Cl. D24—*02*
U.S. Cl. D24—17

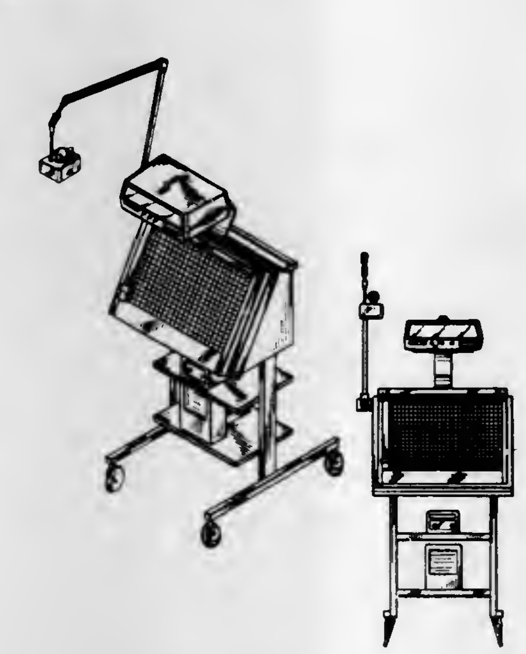

246,600
TEST TUBE
Motoji Kurata, Hatsukaichi, Japan, assignor to Japan Medical Supply Co., Ltd.
Filed Nov. 5, 1975, Ser. No. 629,043
Claims priority, application Japan, May 6, 1975, 50-17460
Term of patent 7 years
Int. Cl. D24—*02*
U.S. Cl. D24—56

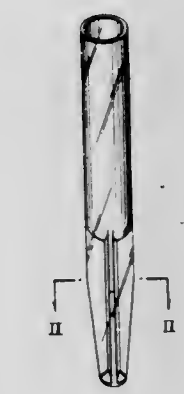

246,601
WINDOW COMPONENT EXTRUSION
Raymond Dallaire, P.O. Box 220, Levis, Quebec, Canada
Filed Apr. 5, 1976, Ser. No. 673,432
Claims priority, application Canada, Oct. 10, 1975, 10-10-75-6
Term of patent 14 years
Int. Cl. D25—*01*
U.S. Cl. D25—74

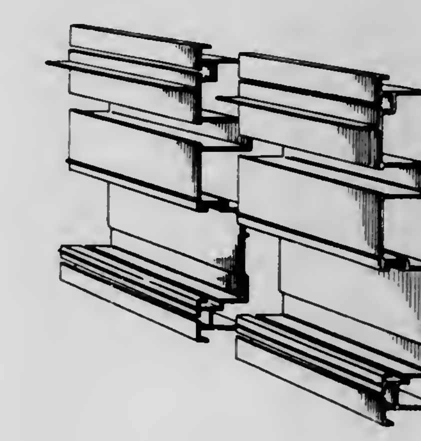

246,602
CIGARETTE HOLDER
Charles W. Frost, 1788A Spanish Trail, Columbia, S.C. 29210
Filed Dec. 2, 1975, Ser. No. 637,067
Term of patent 14 years
Int. Cl. D27—*02*
U.S. Cl. D27—2

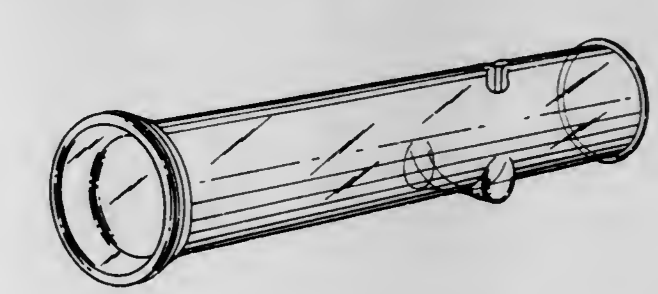

246,603
SMOKING PIPE
Charles W. Frost, 1788A Spanish Trail, Columbia, S.C. 29210
Filed Dec. 2, 1975, Ser. No. 637,045
Term of patent 14 years
Int. Cl. D27—*02*
U.S. Cl. D27—3

246,604
SMOKING PIPE
Charles W. Frost, 1788A Spanish Trail, Columbia, S.C. 29210
Filed Dec. 2, 1975, Ser. No. 637,046
Term of patent 14 years
Int. Cl. D27—*02*
U.S. Cl. D27—3

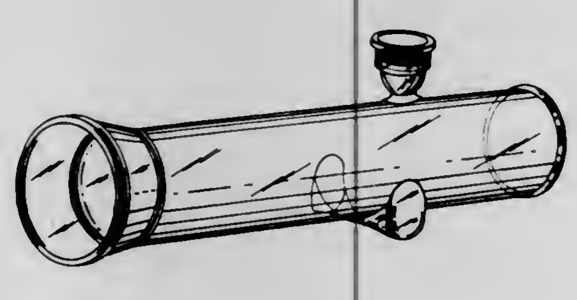

246,605
PORTABLE HAIR DRYER
Morison S. Cousins, Plainview, and Michael A. Cousins, Huntington, both of N.Y., assignors to The Gillette Company, Boston, Mass.
Filed Apr. 1, 1976, Ser. No. 672,788
Term of patent 14 years
Int. Cl. D28—*03*
U.S. Cl. D28—13

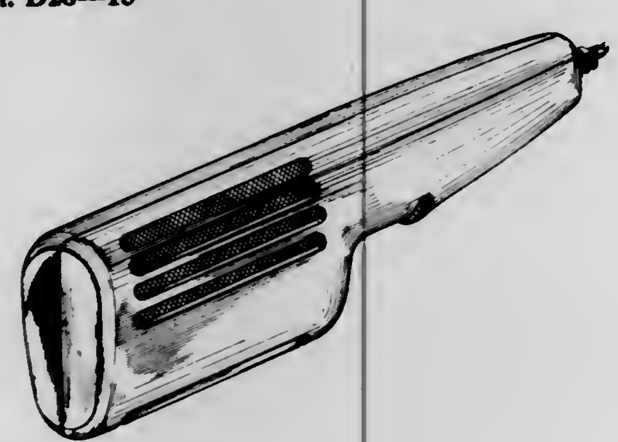

246,606
STYLER HANDLE
Morison S. Cousins, Plainview; Michael A. Cousins, Huntington, both of N.Y., and Greydon A. Rhodes, III, Noroton, Conn., assignors to The Gillette Company, Boston, Mass.
Filed Apr. 1, 1976, Ser. No. 672,787
Term of patent 14 years
Int. Cl. D28—*03*
U.S. Cl. D28—18

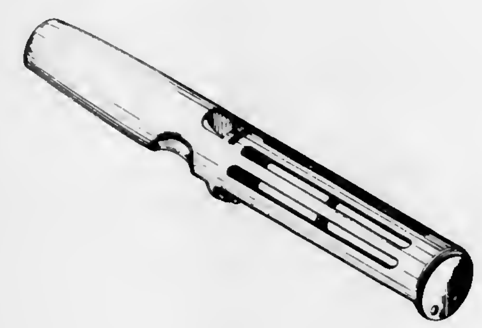

246,607
PENDANT OR THE LIKE
Michael R. Radisich, 3209 N. County Road 25, Loveland, Colo. 80537
Filed Apr. 8, 1976, Ser. No. 674,904
Term of patent 14 years
Int. Cl. D11—*01*
U.S. Cl. D31—21.3

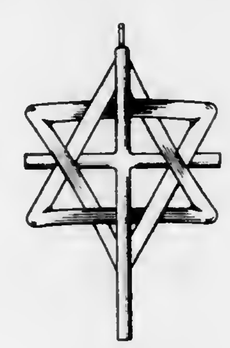

246,608
DOLL
Yoshizo Nagasaka, Tokyo, Japan, assignor to Tomy Kogyo Co., Inc., Tokyo, Japan
Filed Sept. 17, 1976, Ser. No. 724,070
Term of patent 14 years
Int. Cl. D21—*01*
U.S. Cl. D34—4 R

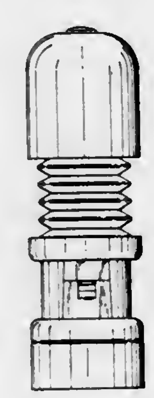

246,609
GAME BOARD
Hideyuki Kanno, Tokyo, Japan, assignor to Tomy Kogyo Co., Inc., Tokyo, Japan
Filed Jan. 13, 1976, Ser. No. 648,636
Term of patent 14 years
Int. Cl. D21—*01*
U.S. Cl. D34—5 SS

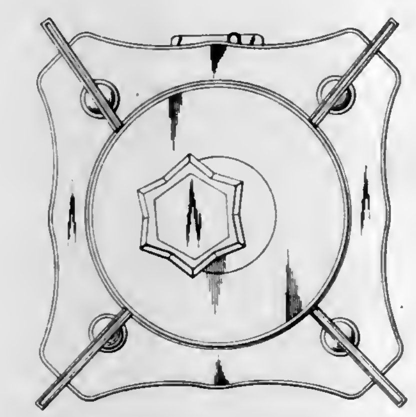

246,610
ELECTRICAL CIRCUIT GAME BOARD
Teruo Matsumoto, Tokyo, Japan, assignor to Epoch Company, Ltd., Tokyo, Japan
Filed Apr. 15, 1976, Ser. No. 677,125
Term of patent 14 years
Int. Cl. D21—*01*
U.S. Cl. D34—5 SS

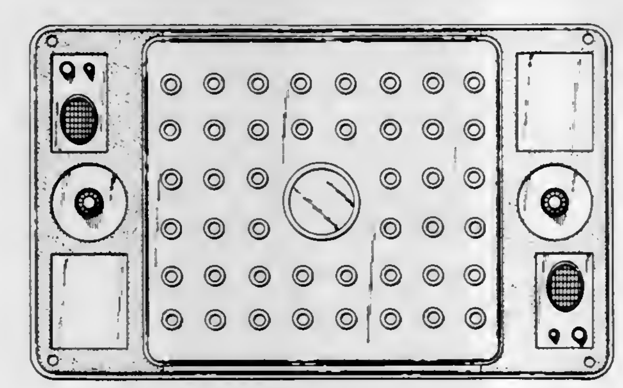

246,611
GAME TARGET
Henry C. Noyes, Jr., 8117 Blairton Road, and C. March Miller, 6330 Alberta St., both of Springfield, Va. 22152
Filed Mar. 17, 1976, Ser. No. 666,861
Term of patent 14 years
Int. Cl. D21—*01*
U.S. Cl. D34—5 PP

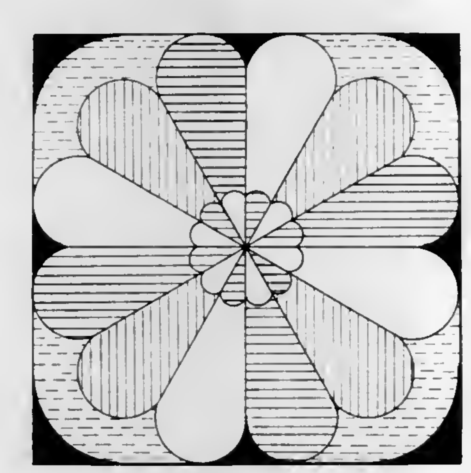

246,612
SKI POLE GRIP OR SIMILAR ARTICLE
Frank A. Hosick, Vashon, Wash., assignor to K-2 Corporation, Vashon, Wash.
Filed July 1, 1976, Ser. No. 701,593
Term of patent 14 years
Int. Cl. D21—*02*
U.S. Cl. D34—14 D

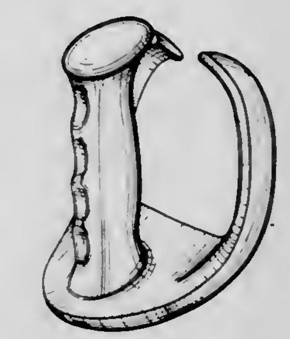

246,613
TOY RACING CAR
Iwakichi Ogawa, Kashiwa, Japan, assignor to Takara Co., Ltd., Tokyo, Japan
Filed May 25, 1976, Ser. No. 689,949
Term of patent 14 years
Int. Cl. D21—*01*
U.S. Cl. D34—15 AJ

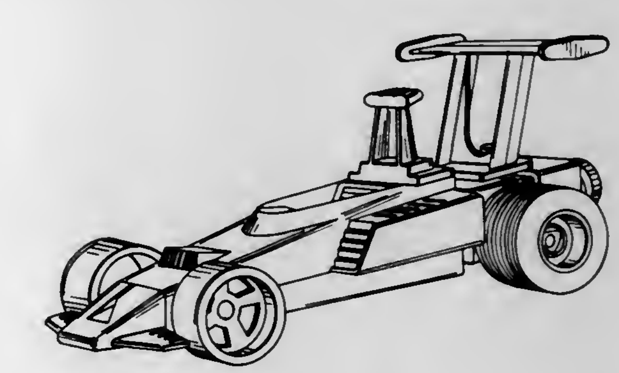

246,614
SIMULATIVE TOY TOP
Ray W. Johnson, Wichita, Kans., assignor to David L. Gordon, Wichita, Kans., a part interest
Filed June 4, 1976, Ser. No. 693,132
Term of patent 14 years
Int. Cl. D21—*01*
U.S. Cl. D34—15 BB

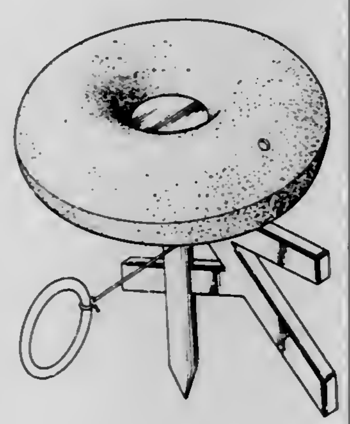

246,615
COMBINED STORAGE AND SHIPPING CONTAINER
Benjamin A. Downing, Peoria, Ill., assignor to Caterpillar Tractor Co., Peoria, Ill.
Filed Mar. 1, 1976, Ser. No. 662,486
Term of patent 14 years
Int. Cl. D9—*03*
U.S. Cl. D87—1 R

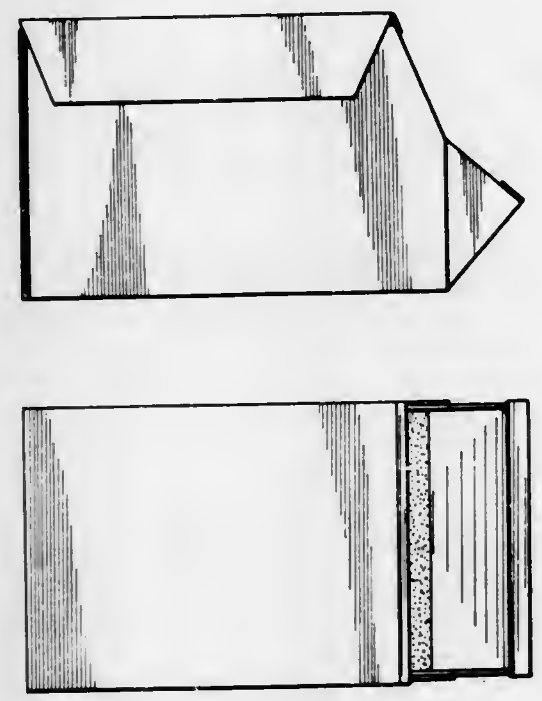

LIST OF PATENTEES

TO WHOM

PATENTS WERE ISSUED ON THE 6TH DAY OF DECEMBER, 1977

NOTE.—Arranged in accordance with the first significant character or word of the name (in accordance with city and telephone directory practice).

Altmann, Jack G., to G. Hunziker AG. Width-maintaining cylinder. 4,061,374, Cl. 308-1.00R.
Alyea, Harold W.: *See—*
Ley, Ralph M., Jr.; Alyea, Harold W.; and Holloway, Thomas M., 4,061,266, Cl. 236-49.000.
Alza Corporation: *See—*
Morris, Kent C.; Bonsen, Pieter; and Laver, Myron B., 4,061,736, Cl. 424-177.000.
Amano, Tadashi; and Nakamura, Masaji, to Konishiroku Photo Industry Co., Ltd. Scanning color densitometer. 4,061,428, Cl. 356-175.000.
American Air Filter Company, Inc.: *See—*
Revell, Alan E., 4,061,373, Cl. 292-251.000.
Shuler, Bernard R., 4,061,082, Cl. 98-40.00D.
American Cyanamid Company: *See—*
Adam, Alberto Eilert, 4,061,751, Cl. 424-250.000.
Boatright, Alfonso, 4,061,740, Cl. 424-202.000.
Conrow, Ransom Brown; Bernstein, Seymour; and Bauman, Norman, 4,061,627, Cl. 260-178.000.
Floyd, Middleton Brawner, Jr.; Weiss, Martin Joseph; Grudzinskas, Charles Vincent; and Lai Chen, Sow-Mei, 4,061,670, Cl. 260-514.00D.
Floyd, Middleton Brawner, Jr.; McGahren, William James; Schaub, Robert Eugene; and Weiss, Martin Joseph, 4,061,672, Cl. 260-514.00D.
Goldstein, Marvin Sherwood; Lindsley, John Francis; Allison, William Woodrow; and Price, Charles Dan, 4,061,597, Cl. 252-465.000.
Hillard, Ray Leonard; and Weston, Norma Ann, 4,061,681, Cl. 260-606.50P.
Hoffman, John Ronald; and Marsland, Peter John, 4,060,885, Cl. 29-407.000.
Oberstar, Helen Elizabeth; and Westman, Morton Alan, 4,061,602, Cl. 252-547.000.
American Home Products Corporation: *See—*
Alburn, Harvey E.; Lien, Eric L.; and Grant, Norman H., 4,061,737, Cl. 424-177.000.
Sarantakis, Dimitrois, 4,061,608, Cl. 260-8.000.
Sellstedt, John H., 4,061,628, Cl. 260-239.100.
American Hospital Supply Corporation: *See—*
Eitzen, Vincent Elliott; and Moore, Robert Rockwell, 4,061,315, Cl. 366-111.000.
American Safety Equipment Corporation: *See—*
Miller, David D., 4,060,867, Cl. 9-313.000.
AMI Industries, Inc.: *See—*
Reida, William D., 4,061,396, Cl. 297-283.000.
AMP Incorporated: *See—*
Dechelette, Helen; and Joly, Jean Claud, 4,060,890, Cl. 29-628.000.
Kunkle, John Philip, 4,061,406, Cl. 339-47.00C.
Ampex Corporation: *See—*
Weber, Donald William, 4,062,048, Cl. 360-72.000.
Anderson Bros. Mfg. Co.: *See—*
Fiedler, Edgar F.; Copas, Gordon A.; and Willey, Arthur F., 4,060,959, Cl. 53-373.000.
Anderson, Emmett R., to Applied Materials, Inc. Vapor desposition method. 4,061,800, Cl. 427-46.000.
Anderson, John Dale; Buller, Richard James; and Trego, Allen Thomas, to Hesston Corporation. Crop harvesting rotor. 4,060,961, Cl. 56-294.000.
Anderson, Joseph B. Male urinating aid. 4,060,859, Cl. 4-102.000.
Andoniev, Sergei Mikhailovich; Granovsky, Boris Ruvimovich; Golod, Leonid Davydovich; Kudinov, Gennady Alexandrovich; Kasyanov, Grigory Ivanovich; Filipiev, Oleg Vladimirovich; Tseluiko, Jury Ivanovich; and Lysenko, Evgeny Eliseevich. Blast furnace bottom cooling arrangement. 4,061,317, Cl. 266-193.000.
Andre, Wolfram, to International Standard Electric Corporation. In line gun support arrangement with expansion compensation. 4,061,942, Cl. 313-417.000.
Antwiler, Lonnie D.: *See—*
Johnson, Curtis D.; McFarland, Larry C.; and Antwiler, Lonnie D., 4,061,074, Cl. 89-33.0CA.
Apostol, Frank: *See—*
Doshi, Niranjan Kumar, 4,061,445, Cl. 418-54.000.
Application Engineering Corporation: *See—*
Shultz, Gilbert F.; and Bailey, Ronald W., 4,060,997, Cl. 62-180.000.
Applied Materials, Inc.: *See—*
Anderson, Emmett R., 4,061,800, Cl. 427-46.000.
Archibald, John Leheup; and Jackson, John Lambert, to John Wyeth & Brother Limited. Ureidopiperidino-ketoalkyl indoles. 4,061,641, Cl. 260-293.610.
Archibald, John Leheup, to John Wyeth & Brother Limited. Treating hypertension and central nervous system abnormalities. 4,061,758, Cl. 424-263.000.
Archibald, John Leheup: *See—*
Cavalla, John Frederick; and Archibald, John Leheup, 4,061,640, Cl. 260-287.0CE.
Arena, Vincent. Multi-flavor whip cream apparatus. 4,061,248, Cl. 222-4.000.
Armco Steel Corporation: *See—*
Maxel, John M., 4,061,817, Cl. 428-246.000.
Armstrong Cork Company: *See—*
Dieck, Ronald Lee; and Quinn, Edwin John, 4,061,606, Cl. 260-2.50R.
George, Jay R.; Line, Larry L.; and Reed, David H., 4,061,516, Cl. 156-94.000.
Armstrong, Lee R.: *See—*
Goodfriend, Harvey J.; Mercik, Henry J., Jr.; and Armstrong, Lee R., 4,061,026, Cl. 73-116.000.
Willenbecher, James F.; and Armstrong, Lee R., 4,061,025, Cl. 73-116.000.
Arndt, Friedrich; and Plum, Hans, to Schering Aktiengesellschaft. Method of controlling weed growth in rice fields with tri-n-butyl tin imidazole. 4,061,491, Cl. 71-92.000.
Arnold, George B., to Texaco Inc. Process for heating a fluid in a geothermal formation. 4,060,988, Cl. 60-641.000.
Arnoldsson, Eric, to Kockums Industri Aktiebolag. Device for shifting between fine and coarse steering of vehicles comprising a front and a rear vehicle part. 4,061,052, Cl. 74-498.000.
Arriola, Baltazar, to Raymond Lee Organization, Inc., The, a part interest. Carpet cutting device. 4,061,065, Cl. 83-562.000.
Arthur D. Little, Inc.: *See—*
Modell, Michael, 4,061,566, Cl. 210-32.000.
Asahi Kasei Kogyo Kabushiki Kaisha: *See—*
Hayano, Fusakazu; Hashino, Yasuo; and Ichikawa, Kiyoshi, 4,061,821, Cl. 428-304.000.
Asamoto, Toshitaka: *See—*
Kondo, Takajiro; Asamoto, Toshitaka; and Oki, Tsutomu, 4,060,892, Cl. 30-253.000.
Asano, Kazuhiro, to Kabushiki Kaisha Daini Seikosha. Circuit for obtaining DC voltage higher than power source voltage. 4,061,929, Cl. 307-246.000.
Ashton, Larry; and Block, Leo. Control valve means particularly adapted for swimming pool heater installations embodying a solar heater. 4,061,132, Cl. 126-271.000.
Asinger, Friedrich; Pfeifer, Wolf-Dieter; Offermanns, Heribert; Scherberich, Paul; and Schreyer, Gerd, to Deutsche Gold- und Silber-Scheideanstalt vormals Roessler. Process of making penicillamine. 4,061,674, Cl. 260-534.00S.
Asthana, Abhaya: *See—*
Hannauer, George; and Asthana, Abhaya, 4,061,904, Cl. 364-608.000.
Audio Visual Innovators Corporation: *See—*
Krasin, Thomas L., 4,061,911, Cl. 362-20.000.
Aue, Kazuhide: *See—*
Saito, Shunjiro; Aue, Kazuhide; and Shimojo, Nobuei, 4,061,558, Cl. 204-290.00F.
Aulich, Hubert; and Grabmaier, Josef, to Siemens Aktiengesellschaft. Process for producing gradient fibers. 4,061,484, Cl. 65-2.000.
Auracher, Franz: *See—*
Zeidler, Guenter; and Auracher, Franz, 4,062,043, Cl. 358-86.000.
Aurell, Leif Eric: *See—*
Af Ekenstam, Bo Thuresson; Aurell, Leif Eric; Claeson, Karl Goran; and Karlsson, Birgitta Gunilla, 4,061,625, Cl. 260-112.50R.
Auriemma, Robert Sinbad. Coupling for spiral drain pipe. 4,061,368, Cl. 285-383.000.
Austin Industries, Inc.: *See—*
Pryor, Joseph E., 4,061,195, Cl. 172-456.000.
Austin, Oliver K., to Phillips Petroleum Company. Carbon black pelleter. 4,061,316, Cl. 366-303.000.
Austin, Stephen R.; and Stevenson, George J., to Brevet Corporation, The. Forklift truck. 4,061,237, Cl. 214-515.000.
Automatisme & Technique: *See—*
Bardet, Gerard, 4,061,451, Cl. 425-66.000.
Avco Everett Research Laboratory, Inc.: *See—*
Gay, Gardiner, 4,061,944, Cl. 313-420.000.
Avesta Jernverks Aktiebolag: *See—*
Fredriksson, Rune Osten Walter; Johansson, Johan Ingvar; and Boye, Erhard Rudolf, 4,061,261, Cl. 228-2.500.
Axen, Udo F., to Upjohn Company, The. 2,2-Difluoro-13,14-dihydro-PGF_1 analogs. 4,061,866, Cl. 560-121.000.
Axvig, Maynard Arnold; and Franco, Jose Asuncion, to USM Corporation. Powder applying apparatus and process for making self-locking threaded elements. 4,060,868, Cl. 10-72.00R.
Ayers, Orval E.: *See—*
Chew, William M.; Ayers, Orval E.; Murfree, James A.; and Martignoni, Pasquale, 4,061,512, Cl. 149-22.000.
B. F. Goodrich Company, The: *See—*
Davy, David Larry, 4,061,213, Cl. 188-181.00R.
Lantz, Charles Hunter, 4,061,404, Cl. 303-118.000.
Babcock & Wilcox Company, The: *See—*
Durrant, Oliver W., 4,061,533, Cl. 176-20.00R.
Nolan, John Howard; Goddard, Donald Lawrence; and Short, Barrett John, 4,061,535, Cl. 176-38.000.
Babej, Milos: *See—*
Beck, Gerhard; Kunstmann, Rudolf; Babej, Milos; and Teufel, Hermann, 4,061,671, Cl. 260-514.00D.
Babunovic, Momir, to Barry-Wehmiller Company. Container washing apparatus. 4,061,152, Cl. 134-73.000.
Baczuk, Robert J., to United States of America, Navy. Aluminum silicate stabilizer in gas producing propellants. 4,061,511, Cl. 149-19.900.
Baehr, Edward F.; and Burnett, James E., to United States of America, National Aeronautics and Space Administration. Tissue macerating instrument. 4,061,146, Cl. 128-305.000.
Baglai, Vitaly Mikhailovich: *See—*
Paton, Boris Evgenievich; Medovar, Boris Izrailevich; Baglai, Vitaly Mikhailovich; Latash, Jury Vadimovich; Emelyanenko, July Georgievich; Stupak, Leonid Mikhailovich; Alferov, Jury Fedorovich; Bondarenko, Oleg Petrovich; Schupak, Grigory Bentsionovich; Shuruev, Lev Andreevich; Khasin, Kim Moisee-

vich; Frolov, Jury Fedorovich; Salmin, Valery Vasilievich; Lugovsky, Vladimir Ivanovich; Marjuschenko, Vilen Fedorovich; Shaburov, Fedor Fedorovich; Schelkunov, Jury Andreevich, deceased; and Schelkunova, Margarita Petrovna, administratrix, 4,061,180, Cl. 164-252.000.
Bagne, Gordon, to Plasticolor Molded Products, Inc. Mud guard. 4,061,352, Cl. 280-154.50R.
Bailey, Ronald W.: *See—*
Shultz, Gilbert F.; and Bailey, Ronald W., 4,060,997, Cl. 62-180.000.
Bait Guard Inc.: *See—*
Bias, Arnett, 4,060,925, Cl. 43-41.200.
Baker, Forester C., to United Air Specialists, Inc. Circuit for controlling the duty cycle of an electrostatic precipitator power supply. 4,061,961, Cl. 323-21.000.
Baker, Roger Thomas. Dynamic content addressable semiconductor memory. 4,062,001, Cl. 365-49.000.
Bakkeren, Hans Adolf. Device for transporting unstable stacks of sheetlike materials. 4,061,084, Cl. 100-1.000.
Baldwin, William I.; and Buchele, Wesley F., to Iowa State University Research Foundation, Inc. Recording soil penetrometer. 4,061,021, Cl. 73-84.000.
Balfour, Beatty & Company Limited: *See—*
Milne, James, 4,060,953, Cl. 52-743.000.
Ballweber, Edward G.: *See—*
Tai, Wun Ten; Mura, Lawrence A.; Phillips, Kenneth G.; and Ballweber, Edward G., 4,061,695, Cl. 260-929.000.
Bangle, Roger L. Removable skateboard handle post. 4,061,351, Cl. 280-87.04A.
Banner, Philip M. Marine water inlet device. 4,061,571, Cl. 210-130.000.
Bantien, Jurgen; Bardenhagen, Dietrich; Mielke, Johannes; and Kruse, Friedel, to Hauni-Werke Korber & Co., KG. Apparatus for assembling multi-layer groups of cigarettes or the like. 4,061,234, Cl. 214-6.00M.
Barbe, Gerard; and Deyres, Andre, to Rhone-Poulenc Textiles. Polyester fibers having wool-like hand and process for producing same. 4,060,968, Cl. 57-140.0BY.
Barber, Alfred William. Timing circuit for incremental actuators. 4,061,951, Cl. 318-443.000.
Barclay, Robert: *See—*
Bertozzi, Eugene R.; Hoffman, Robert F.; and Barclay, Robert, 4,061,612, Cl. 260-31.40R.
Bard Laboratories, Inc.: *See—*
Quast, Kenneth J., 4,061,831, Cl. 428-480.000.
Yundt, Albert P., 4,061,836, Cl. 428-537.000.
Bardenhagen, Dietrich: *See—*
Bantien, Jurgen; Bardenhagen, Dietrich; Mielke, Johannes; and Kruse, Friedel, 4,061,234, Cl. 214-6.00M.
Bardet, Gerard, to Automatisme & Technique; and Desmarquest & C. E.C. Installation for the zonal treatment of elongated products. 4,061,451, Cl. 425-66.000.
Barker, Gerald C., to Coherent Radiation. Soft power supply for pulsed laser. 4,061,986, Cl. 331-94.5PE.
Barmag Barmer Maschinenfabrik Aktiengesellschaft: *See—*
Lorenz, Hellmut, 4,060,967, Cl. 57-77.450.
Barnes, Derek, to MacMillan Bloedel Limited. Products of converted lignocellulosic materials. 4,061,819, Cl. 428-294.000.
Barreto, Albert: *See—*
Muir, Larry A.; and Barreto, Albert, 4,061,732, Cl. 424-117.000.
Barron, Lee H., Sr. Glass beveling machine. 4,060,938, Cl. 51-110.000.
Barrons, Morris R. Citizen band radio mount. 4,061,971, Cl. 325-15.000.
Barry-Wehmiller Company: *See—*
Babunovic, Momir, 4,061,152, Cl. 134-73.000.
Bart, Evgeny Vasilievich; Batalin, Oleg Efimovich; Troitsky, Andrian Petrovich; Skachkova, Nina Andreevna; Lebedev, Vladimir Mikhailovich; and Trifonova, Rimma Petrovna. Method of producing high-boiling byproducts of isoprene production. 4,061,680, Cl. 260-606.000.
Bartels, Werner; and Krakow, Heinz, to Blohm & Voss AG. Method for producing helical seam pipes. 4,061,264, Cl. 228-145.000.
Barter, James A., to PPG Industries, Inc. Tertiary-alkylperoxy alkyl carbonate initiators for hot air vulcanization of silicone rubber. 4,061,704, Cl. 264-83.000.
Bartmann, Wilhelm; Kunstmann, Rudolf; Lerch, Ulrich; and Scholkens, Bernward, to Hoechst Aktiengesellschaft. Cyclopentane derivatives and process for preparing them. 4,061,766, Cl. 424-279.000.
Bartmann, Wilhelm: *See—*
Teufel, Hermann; Bartmann, Wilhelm; Granzer, Ernold; and Musil, Josef, 4,061,772, Cl. 424-304.000.
Barud, Sigvard: *See—*
Kvaerna, Sverre; and Barud, Sigvard, 4,061,324, Cl. 269-325.000.
BASF Aktiengesellschaft: *See—*
Adolphi, Heinrich; Fleig, Helmut; and Hagen, Helmut, 4,061,762, Cl. 424-270.000.
Kahr, Kurt; Pohl, Hanns; Rapp, Guenther; and Lauz, Peter, 4,061,677, Cl. 260-566.00A.
Muenster, Alfred, 4,061,849, Cl. 526-68.000.
Ohlinger, Manfred; Schoenafinger, Eduard; Schneider, Walter; Stritzinger, Heinz; and Vaeth, Guenter, 4,061,725, Cl. 423-634.000.
Ohlinger, Manfred; Schoenafinger, Eduard; Vaeth, Guenter; Stritzinger, Heinz; Koester, Eberhard; Schneehage, Hans Henning; and Steck, Werner, 4,061,726, Cl. 423-634.000.
Stastny, Fritz; Gaeth, Rudolf; Haardt, Udo; and Koerner, Heinz-Hermann, 4,061,701, Cl. 264-51.000.
Vaeth, Guenter; Ohlinger, Manfred; Stritzinger, Heinz; Schoenafinger, Eduard; Wettstein, Eugen; and Guth, Wolfgang, 4,061,727, Cl. 423-634.000.
Wild, Hans; Jung, Rudolf; Echte, Adolf; Zizlsperger, Johann; and Gausepohl, Hermann, 4,061,858, Cl. 526-67.000.
BASF Wyandotte Corporation: *See—*
Helfert, Herbert; Langdon, William Keith; and Davis, Pauls, 4,061,684, Cl. 260-615.00B.
Bass, Merlyn Duane: *See—*
Raisbeck, Wesley Paul; Bass, Merlyn Duane; Whicker, Bobbie Dean; Davis, William Clair; and Fairbank, Raymond Harry, 4,061,284, Cl. 241-294.000.
Bast, Kenneth D.; and Kennelly, Jerauld M., to Minnesota Mining and Manufacturing Company. Connector for a plate electrode. 4,061,408, Cl. 339-75.00R.
Batalin, Oleg Efimovich: *See—*
Bart, Evgeny Vasilievich; Batalin, Oleg Efimovich; Troitsky, Andrian Petrovich; Skachkova, Nina Andreevna; Lebedev, Vladimir Mikhailovich; and Trifonova, Rimma Petrovna, 4,061,680, Cl. 260-606.000.
Batchelor, Phillip J.; Traister, Robert L.; Gray, Gary A.; and Marino, Joseph A., to Xerox Corporation. Error log for electrostatographic machines. 4,062,061, Cl. 364-900.000.
Battle, Francis L., to Gulf & Western Industries, Inc. Digital traffic coordinator. 4,061,902, Cl. 364-436.000.
Battle, Francis L., to Gulf & Western Industries, Inc. Digital coordinator with smooth transition for offset changes. 4,061,903, Cl. 364-436.000.
Bauer, Gilbert: *See—*
Noel, Jean Pierre; and Bauer, Gilbert, 4,061,016, Cl. 73-60.100.
Bauer, Lawrence H.: *See—*
Leto, Armetia E.; and Bauer, Lawrence H., 4,060,932, Cl. 46-116.000.
Bauerkemper, Michael I., to International Telephone and Telegraph Corporation. Method and apparatus for terminating a fiber optic bundle. 4,061,522, Cl. 156-305.000.
Baughman, Ray M.: *See—*
Nelson, Rodney L., 4,061,399, Cl. 299-18.000.
Bauman, Norman: *See—*
Conrow, Ransom Brown; Bernstein, Seymour; and Bauman, Norman, 4,061,627, Cl. 260-178.000.
Baumgartel, Karl Heinz; Altenburg, Dieter; and Hase, Siegfried, to Licentia Patent-Verwaltungs-G.m.b.H. Roller conveyor. 4,061,332, Cl. 271-270.000.
Baumgartner, Hans Ulrich: *See—*
Witzke, Gunther; and Baumgartner, Hans Ulrich, 4,061,035, Cl. 73-406.000.
Baxter, Gerald M., to Redimix Beverages Limited. Beverage package cup. 4,061,782, Cl. 426-86.000.
Baxter Travenol Laboratories, Inc.: *See—*
Leonard, Ronald J., 4,061,470, Cl. 23-258.50M.
Bayer Aktiengesellschaft: *See—*
Becker, Wolf-Jurgen; Breuer, Wolfram; and Siemer, Klaus, 4,061,467, Cl. 23-232.00R.
Brauner, Dieter; Kaluza, Hans-Joachim; and Muschelknautz, Edgar, 4,061,313, Cl. 366-340.000.
Horstmann, Harald; Meng, Karl; and Wehinger, Egbert, 4,061,653, Cl. 548-360.000.
Hubner, Hans; Blahak, Johannes; and Meiners, Hans-Joachim, 4,061,697, Cl. 260-944.000.
Knofel, Hartmut; and Ellendt, Gunther, 4,061,678, Cl. 260-570.00D.
Margotte, Dieter; and Vernaleken, Hugo, 4,061,691, Cl. 260-860.000.
BBC Brown, Boveri & Company Limited: *See—*
Gillhaus, Horst, 4,061,179, Cl. 164-151.000.
Bealmear, Herbert Shipley. Releasable locking means for two part electric connector. 4,061,409, Cl. 339-75.00P.
Bean, Charles P.; King, Roy J., Jr.; and Uzgiris, Egidijus E., to General Electric Company. Bioassay for drugs and antibiotics. 4,061,543, Cl. 195-103.50K.
Beck, Gerhard; Kunstmann, Rudolf; Babej, Milos; and Teufel, Hermann, to Hoechst Aktiengesellschaft. Analogues of prostaglandins. 4,061,671, Cl. 260-514.00D.
Beck, Harold D., to International Harvester Company. Fan shroud structure. 4,061,188, Cl. 165-122.000.
Becker, Wolf-Jurgen; Breuer, Wolfram; and Siemer, Klaus, to Bayer Aktiengesellschaft. Process and apparatus for the removal of samples for analysers from a stream of exhaust gas. 4,061,467, Cl. 23-232.00R.
Beckett Corporation: *See—*
Clark, Anthony W.; and Stubbs, Rex G., Jr., 4,061,442, Cl. 417-36.000.
Beckmann, Robert Martin: *See—*
Reimers, Fred Alan; Beckmann, Robert Martin; Burzynski, William Arthur; Tomlinson, Dennis Eugene; and Schwartz, William Henry, 4,061,973, Cl. 325-17.000.
Bedague, Pierre: *See—*
Leleu, Gerard; Bedague, Pierre; and Sillion, Bernard, 4,061,581, Cl. 252-32.70E.
Beecham Group Limited: *See—*
Howarth, Thomas Trefor, 4,061,649, Cl. 260-307.0FA.
Lake, Anthony William; and Rose, Carl John, 4,061,779, Cl. 424-331.000.
Beekenkamp, Gerald, to Black and Decker Manufacturing Company, The. Foldable, portable support stand. 4,061,305, Cl. 248-432.000.
Beekenkamp, Gerald, to Black and Decker Manufacturing Company,

The. Workpiece supporting and clamping apparatus. 4,061,323, Cl. 269-139.000.
Beer, Irwin B.; and Siegal, Sanford. Tennis ball holder to be worn on the arm. 4,061,256, Cl. 224-5.00D.
Behringwerke Aktiengesellschaft: *See—*
Seiler, Fritz; and Schwarzbeck, Andreas Michael, 4,061,537, Cl. 195-1.700.
Weiler, Herbert; Schneider, Hans; Von Janecek, Wolfgang; and Weyrich, Ludwin, 4,060,911, Cl. 34-5.000.
Bell, Charles H., to United States of America, National Aeronautics and Space Administration. Fiber optic multiplex optical transmission system. 4,061,577, Cl. 250-199.000.
Bell Telephone Laboratories, Incorporated: *See—*
Adrian, James Mark, 4,061,884, Cl. 179-18.0GF.
Beurrier, Henry Richard, 4,061,049, Cl. 74-424.80R.
Cordell, Robert Roger, 4,061,932, Cl. 307-360.000.
Kubik, Peter Steve, 4,061,410, Cl. 339-113.00B.
Scull, Harvey Ronald, 4,062,047, Cl. 360-26.000.
Taylor, Gary Newton, 4,061,829, Cl. 428-451.000.
Belliere, Pierre A., to Ratier-Forest. Device for controlling the variation in pitch of the blades of a fan. 4,061,440, Cl. 416-157.00R.
Bellus, Daniel: *See—*
Greuter, Hans; and Bellus, Daniel, 4,061,644, Cl. 260-296.00R.
Belsky, Arkady Andreevich: *See—*
Ivanova, Raisa Vasilievna; Belsky, Arkady Andreevich; Novikov, Nikolai Alexandrovich; Alexeeva, Nina Nikolaevna; Nikitina, Ljudmila Nikolaevna; Ljubimova, Nina Andreevna; and Dotsenko, Anna Evgenievna, 4,061,551, Cl. 204-105.00R.
Benda, David; and Davis, Charles A., to GTE Sylvania Incorporated. Shielded getter support on rotor-supported antenna. 4,061,956, Cl. 313-481.000.
Benjamin, Joseph Reginald. Drilling rigs. 4,061,233, Cl. 214-2.500.
Bennett, Henry J., to Burdett Manufacturing Company. Combustion system and method. 4,061,463, Cl. 431-9.000.
Bennett, John A.; McAllister, Ian R.; and Welsh, Howard. Oil recovery apparatus and method. 4,061,569, Cl. 210-83.000.
Berg, Albert T., Jr.; and Langlie, Howard. Corner insulator for electric fences. 4,061,873, Cl. 174-208.000.
Berger, Sidney Ethan; and Salensky, George Anthony, to Union Carbide Corporation. Silane treatment of titanium dioxide pigment. 4,061,503, Cl. 106-300.000.
Berglein, Adolf: *See—*
Lachnit, Wolfgang, 4,060,955, Cl. 52-749.000.
Berglund, Kurt, to Siemens Aktiengesellschaft. Circuit arrangement for the frequency analysis of a signal. 4,062,020, Cl. 346-33.00R.
Berkey-Colortran, Inc.: *See—*
Levasseur, Craig, 4,061,912, Cl. 362-287.000.
Bernard, Jean-Rene; Bousquet, Jacques; and Grand, Michel, to Societe Nationale Elf Aquitaine. Method of catalytic conversion of butane. 4,061,690, Cl. 260-676.00R.
Bernard, Vincent E., to Jimmy Dean Meat Company, Inc., The. Portion controlled frozen food. 4,060,998, Cl. 62-320.000.
Bernstein, Jacob. Toe protector and foot support for an orthopedic cast. 4,061,138, Cl. 128-82.000.
Bernstein, Seymour: *See—*
Conrow, Ransom Brown; Bernstein, Seymour; and Bauman, Norman, 4,061,627, Cl. 260-178.000.
Bertozzi, Eugene R.; Hoffman, Robert F.; and Barclay, Robert, to Thiokol Corporation. Low temperature plasticizers for specialty rubbers consisting of diesters of dicarboxylic acids with hexyloxyethoxyethanol or butoxyethoxyethoxyethanol. 4,061,612, Cl. 260-31.40R.
Beurrier, Henry Richard, to Bell Telephone Laboratories, Incorporated. Mechanism for changing linear motion to substantially pivotal motion. 4,061,049, Cl. 74-424.80R.
Beyler, Roland. Process for reducing the pollution due to an internal combustion engine, and an engine including the application of said process. 4,061,113, Cl. 123-26.000.
Bias, Arnett, to Bait Guard Inc. Fishing bobber and bait guard. 4,060,925, Cl. 43-41.200.
Bicking, John B.: *See—*
Cragoe, Edward J., Jr.; and Bicking, John B., 4,061,643, Cl. 260-295.00R.
Bierwagen, Gordon Paul: *See—*
Glowaky, Raymond Charles; Rudolph, Stephen Edward; and Bierwagen, Gordon Paul, 4,061,610, Cl. 260-17.4ST.
Glowaky, Raymond Charles; Rudolph, Stephen Edward; and Bierwagen, Gordon Paul, 4,061,611, Cl. 260-17.4ST.
Binder, Volker: *See—*
Schwarze, Werner; Merk, Wolfgang; and Binder, Volker, 4,061,869, Cl. 526-1.000.
Biondetti, Mario, to Escher Wyss GmbH. Adjustable suction device for a paper machine. 4,061,532, Cl. 162-352.000.
Biorex Laboratories Limited: *See—*
Chan, Rosalind Po Kuen, 4,061,773, Cl. 424-313.000.
Bird, Thomas Lewis: *See—*
Jones, Ivor Wynn; Robinson, Graham; and Bird, Thomas Lewis, 4,061,840, Cl. 429-104.000.
Birdwell, J. C., to Midcon Pipeline Equipment Co. Pipe handling apparatus for pipe laying barges. 4,061,231, Cl. 214-1.00P.
Birkenfeld, Richard; and Jaschke, Reinhold, to E. Mollers, Firma. Method and apparatus for forming palletless packages. 4,060,957, Cl. 53-26.000.
Biron, Richard D., to Seagull Industries, Inc. Portable oil-water separation apparatus. 4,061,573, Cl. 210-282.000.
Bissett, Thomas B. Roll stabilizer for boats. 4,061,102, Cl. 114-122.000.
Black and Decker Manufacturing Company, The: *See—*
Beekenkamp, Gerald, 4,061,305, Cl. 248-432.000.
Beekenkamp, Gerald, 4,061,323, Cl. 269-139.000.
DeWitt, Erik John. deceased, 4,060,940, Cl. 51-170.0PT.
Black, Dennis A.; and Brucken, Byron L., to General Motors Corporation. Variable stroke compressor. 4,061,443, Cl. 417-222.000.
Black, Frank M. Absorber-contactor. 4,060,912, Cl. 34-9.000.
Black, Robin Michael, to John Wyeth & Brother Limited. Imidazo[1,2-a]quinolines. 4,061,754, Cl. 424-258.000.
Blahak, Johannes: *See—*
Hubner, Hans; Blahak, Johannes; and Meiners, Hans-Joachim, 4,061,697, Cl. 260-944.000.
Blasetti, David H. Apparatus for generating forces in a specimen. 4,061,019, Cl. 73-662.000.
Blessing, Hubert. Folding apparatus. 4,061,327, Cl. 270-78.000.
Blevins, Bascom D.: *See—*
Schmidt, Ernest J., Jr.; Rinehart, Michael G.; and Blevins, Bascom D., 4,061,350, Cl. 280-87.04A.
Block, Leo: *See—*
Ashton, Larry; and Block, Leo, 4,061,132, Cl. 126-271.000.
Blohm, Thomas R.; Grisar, J. Martin; and Wiech, Norbert L., to Richardson-Merrell Inc. Lactamimide inhibitors of gastrointestinal hypersecretion. 4,061,746, Cl. 424-244.000.
Blohm & Voss AG: *See—*
Bartels, Werner; and Krakow, Heinz, 4,061,264, Cl. 228-145.000.
Blomberg, Folke Ivar. Rotational rate of change sensor. 4,061,212, Cl. 188-181.00A.
Blomberg Glass: *See—*
Cardoso, LeRoy A., 4,061,372, Cl. 292-207.000.
Blomstrom, Gary D., to Caterpillar Tractor Co. Shock mounted tilting operator platform. 4,061,393, Cl. 296-28.00C.
Bloomfield, Harvey S., to United States of America, National Aeronautics and Space Administration. In-situ laser retorting of oil shale. 4,061,190, Cl. 166-259.000.
Blum, John Tudor, to Cross Up, Inc. Structural unit for swingarms. 4,061,354, Cl. 280-288.000.
Blyakhman, Lazar Isaevich; Davydov, Sergei Lvovich; and Kashina, Valentina Fedorovna. Method of recovering primary and secondary amines. 4,061,633, Cl. 544-106.000.
Boatright, Alfonso, to American Cyanamid Company. Liquid compositions containing a polyethylene glycol safener and an organophosphorus pesticide. 4,061,740, Cl. 424-202.000.
Bobear, William J., to General Electric Company. Inhibitor for platinum catalyzed silicone rubber compositions. 4,061,609, Cl. 260-9.000.
Bodor, Nicolae S., to INTERx Research Corporation. Selected quaternary ammonium salts of pilocarpine useful in reducing intraocular pressure in warm-blooded animals. 4,061,722, Cl. 424-273.00R.
Bodor, Nicolae S.; and Sloan, Kenneth B., to INTERx Research Corporation. Treating psoriasis with transient pro-drug forms of xanthine derivatives. 4,061,753, Cl. 424-253.000.
Boehringer Mannheim GmbH: *See—*
Lange, Hans; Rittersdorf, Walter; Rey, Hans-Georg; Werner, Wolfgang; and Rieckmann, Peter, 4,061,468, Cl. 23-253.0TP.
Boeing Company, The: *See—*
Gupta, Alankar; and Fadden, Delmar M., 4,061,996, Cl. 340-27.00R.
Hansen, Karl A.; and Hendrickson, I. Glen, 4,061,007, Cl. 72-56.000.
Somm, Paul T., 4,061,295, Cl. 244-104.0FP.
Bohanon, Hoy R., to Acme Engineering and Manufacturing Corporation. Heat transfer system particularly applicable to solar heating installations. 4,061,131, Cl. 126-271.000.
Bohme, Ekkehard: *See—*
Dolfini, Joseph E.; Bohme, Ekkehard; and Slusarchyk, William A., 4,061,629, Cl. 260-239.100.
Dolfini, Joseph Edward; and Bohme, Ekkehard, 4,061,851, Cl. 544-21.000.
Boileau, Jacques; and Mathevet, Albert, to Compagnie Generale des Etablissements Michelin. Nonreinforced tire. 4,061,171, Cl. 152-352.00R.
Bolger, Joseph Earl. Compensating mechanism. 4,061,050, Cl. 74-469.000.
Boller, Arthur: *See—*
Scherrer, Hanspeter; and Boller, Arthur, 4,061,587, Cl. 252-299.000.
Bondarenko, Oleg Petrovich: *See—*
Paton, Boris Evgenievich; Medovar, Boris Izrailevich; Baglai, Vitaly Mikhailovich; Latash, Jury Vadimovich; Emelyanenko, July Georgievich; Stupak, Leonid Mikhailovich; Alferov, Jury Fedorovich; Bondarenko, Oleg Petrovich; Schupak, Grigory Bentsionovich; Shuruev, Lev Andreevich; Khasin, Kim Moiseevich; Frolov, Jury Fedorovich; Salmin, Valery Vasilievich; Lugovsky, Vladimir Ivanovich; Marjuschenko, Vilen Fedorovich; Shaburov, Fedor Fedorovich; Schelkunov, Jury Andreevich, deceased; and Schelkunova, Margarita Petrovna, administratrix, 4,061,180, Cl. 164-252.000.
Bonsen, Pieter: *See—*
Morris, Kent C.; Bonsen, Pieter; and Laver, Myron B., 4,061,736, Cl. 424-177.000.
Boole, Leon J. Portable drawer assembly. 4,061,395, Cl. 297-192.000.
Boone, Terry. Mount. 4,061,302, Cl. 248-170.000.
Borcoman, Mircea. Factory-type apparatus for producing prestressed concrete products. 4,061,454, Cl. 425-88.000.

Boschert Associates: *See—*
Boschert, Robert J., 4,061,931, Cl. 307-300.000.
Boschert, Robert J., to Boschert Associates. Switching regulator power supply main switching transistor turn off speed up circuit. 4,061,931, Cl. 307-300.000.
Bose Corporation: *See—*
Froeschle, Thomas A., 4,061,890, Cl. 179-115.5VC.
Bott, Gerald J.; Porter, William C.; and Nowak, Terrance M. Bottle inspection apparatus. 4,061,014, Cl. 73-45.100.
Bottom, Virgil E.; and Christian, Robert E., to Tyco Filters Division, Inc. Method of improving ohmic contact through high-resistance oxide film. 4,060,888, Cl. 29-628.000.
Bouillon, Claude: *See—*
Kalopissis, Gregoire; Bouillon, Claude; and Vayssie, Charles, 4,061,730, Cl. 424-59.000.
Boulay, Henri A.: *See—*
Walker, William J.; and Boulay, Henri A., 4,061,282, Cl. 241-222.000.
Bourgery, Guy R.: *See—*
Fauran, Claude P.; Eberle, Jeannine A.; Bourgery, Guy R.; Raynaud, Guy R.; and Gouret, Claude J., 4,061,855, Cl. 544-122.000.
Bousquet, Jacques: *See—*
Bernard, Jean-Rene; Bousquet, Jacques; and Grand, Michel, 4,061,690, Cl. 260-676.00R.
Bowns, Richard Earl: *See—*
Clary, Jerome Francis; Wiley, Robert Emerson; and Bowns, Richard Earl, 4,061,601, Cl. 252-511.000.
Box, Theodor M. Mixing apparatus for feed to injection molding machine. 4,061,280, Cl. 241-101.600.
Boyd, William A.: *See—*
Brown, Lowell K.; Newman, William Albert; and Boyd, William A., 4,061,956, Cl. 320-22.000.
Boye, Erhard Rudolf: *See—*
Fredriksson, Rune Osten Walter; Johansson, Johan Ingvar; and Boye, Erhard Rudolf, 4,061,261, Cl. 228-2.500.
Boyer, Ernest Wendell; and Ingle, Morton Blakeman, to Miles Laboratories, Inc. Preparation of alkaline alpha-amylase. 4,061,541, Cl. 195-66.00R.
Brackett, Art H. Chord locater for fretted musical instrument. 4,061,069, Cl. 84-315.000.
Bradley, Frank R., to Bradley Telcom Corp. Instruments and methods for measuring characteristics of only a selected portion of a transmission channel. 4,061,892, Cl. 179-175.30R.
Bradley, Robert L.; and Sullivan, Daniel J., to General Signal Corporation. Fitting for penetration through fire rated barriers. 4,061,344, Cl. 277-26.000.
Bradley Telcom Corp.: *See—*
Bradley, Frank R., 4,061,892, Cl. 179-175.30R.
Brakel, Kornelius, to Robert Bosch G.m.b.H. Hydraulic valve. 4,061,159, Cl. 137-596.000.
Bratzler, Karl: *See—*
Moller, Friedrich-Wilhelm; Bratzler, Karl; and Muller, Wolf-Dieter, 4,061,475, Cl. 48-197.00R.
Brault, Albert T.: *See—*
Wilkes, Glenn R.; and Brault, Albert T., 4,061,497, Cl. 96-77.000.
Brauner, Dieter; Kaluza, Hans-Joachim; and Muschelknautz, Edgar, to Bayer Aktiengesellschaft. Apparatus for the static mixing of flowable substances. 4,061,313, Cl. 366-340.000.
Brazhnik, Viktor Yakovlevich: *See—*
Kaporovich, Vladimir Georgievich; Sereda, Viktor Grigorievich; Udovenko, Vitaly Kirillovich; Zelenskaya, Nadezhda Nikolaevna; Brazhnik, Viktor Yakovlevich; Sviridov, Evgeny Pavlovich; and Fabrichev, Jury Nikolaevich, 4,061,009, Cl. 72-69.000.
Breslow, Jeffrey D., to Marvin Glass & Associates. Board game apparatus. 4,061,335, Cl. 273-134.0AT.
Breuer, Wolfram: *See—*
Becker, Wolf-Jurgen; Breuer, Wolfram; and Siemer, Klaus, 4,061,467, Cl. 23-232.00R.
Brevet Corporation, The: *See—*
Austin, Stephen R.; and Stevenson, George J., 4,061,237, Cl. 214-515.000.
Brewer, Terry L., to Texas Instruments Incorporated. Method of patterning styrene diene block copolymer electron beam resists. 4,061,799, Cl. 427-43.000.
Bridgestone Cycle Industry Co., Ltd.: *See—*
Ohtsuka, Norio, 4,061,229, Cl. 206-486.000.
Brieaddy, Lawrence Edward: *See—*
Mehta, Nariman Bomanshaw; and Brieaddy, Lawrence Edward, 4,061,863, Cl. 560-18.000.
Bristol-Myers Company: *See—*
Kaplan, Murray A.; Gottstein, William J.; and Granatek, Alphonse P., 4,061,862, Cl. 544-27.000.
Brodnyan, John G.; Holloway, Donald F.; and Le Sota, Stanley, to Rohm and Haas Company. Crushed foam coated leather and leather-like materials. 4,061,822, Cl. 428-315.000.
Brooks & Perkins, Incorporated: *See—*
Jensen, Richard H.; and Parris, Peter P., 4,060,936, Cl. 49-465.000.
Brooksbank, Wallace Ronald; and Toft, David. Leather belts or aprons for textile machines. 4,061,803, Cl. 427-323.000.
Brosh, Aviel: *See—*
United States of America, National Aeronautics and Space Administration; Mateer, George C.; and Brosh, Aviel, 4,061,029, Cl. 73-180.000.
Brown, Dennis N. Apparatus for form fitting shoes and boots. 4,060,869, Cl. 12-115.200.
Brown, James D.; and Uraneck, Carl A., to Phillips Petroleum Company. Organocalciumpyridine-type polymerization initiators. 4,061,638, Cl. 260-270.00P.
Brown, Lowell K.; Newman, William Albert; and Boyd, William A., to Utah Research and Development Company. Electronic DC battery charger. 4,061,956, Cl. 320-22.000.
Brown, Roy William. Pneumatically operated conveyor systems for pulverulent or particulate materials. 4,061,401, Cl. 302-41.000.
Brownbill, Thomas Duncan, to John Dale Limited. Closure cap and container. 4,061,240, Cl. 215-270.000.
Brownlee, Robert O. Structural frame for a building. 4,060,948, Cl. 52-236.800.
Brucken, Byron L.: *See—*
Black, Dennis A.; and Brucken, Byron L., 4,061,443, Cl. 417-222.000.
Brush, John B., to Procter & Gamble Company, The. Rotary shear. 4,061,063, Cl. 83-55.000.
Bryant, A. William. Variable waveform synthesizer using digital circuitry. 4,061,909, Cl. 235-197.000.
Bryerton, John B., to Raymond Lee Organization Inc., a part interest. Water-powered dish scrubber. 4,060,871, Cl. 15-29.000.
Buchele, Wesley F.: *See—*
Baldwin, William I.; and Buchele, Wesley F., 4,061,021, Cl. 73-84.000.
Bucklitzsch, Hans H. Windshield wiper and washer. 4,060,872, Cl. 15-250.040.
Buendia, Jean: *See—*
Martel, Jacques; Buendia, Jean; and Vivat, Michel, 4,061,729, Cl. 424-305.000.
Bufler, Ernst, to Volkswagenwerk Aktiengesellschaft. Rear axle stabilizer. 4,061,362, Cl. 280-689.000.
Buhlmann, Siegfried: *See—*
Grebe, Wolfgang; and Buhlmann, Siegfried, 4,061,906, Cl. 364-735.000.
Buller, Richard James: *See—*
Anderson, John Dale; Buller, Richard James; and Trego, Allen Thomas, 4,060,961, Cl. 56-294.000.
Bunge, Ernst: *See—*
Rothgordt, Ulf; Ehlers, Bernd; Bunge, Ernst; and Piotrowski, Herbert, 4,062,014, Cl. 340-347.0DD.
Bunn, Dorrance P., Jr.: *See—*
Jones, Henry B.; and Bunn, Dorrance P., Jr., 4,061,162, Cl. 138-147.000.
Burckhardt, Christoph Benedikt; Grandchamp, Pierre-Andre; and Hoffmann, Heinz, to Hoffmann-La Roche Inc. Method and apparatus for distance measurement in an ultrasonics scanning image. 4,061,018, Cl. 73-629.000.
Burdett Manufacturing Company: *See—*
Bennett, Henry J., 4,061,463, Cl. 431-9.000.
Burg, Stanley P., to Grumman Allied Industries Inc. Low temperature hypobaric storage of metabolically active matter. 4,061,483, Cl. 62-268.000.
Burgess, Victor Robert. Short range induction field communication system. 4,061,972, Cl. 325-16.000.
Burnett, James E.: *See—*
Baehr, Edward F.; and Burnett, James E., 4,061,146, Cl. 128-305.000.
Burns, Arthur H., Jr., to Marlin Firearms Company, The. Method of straightening firearm barrels. 4,061,006, Cl. 72-34.000.
Burns, Robert A., to Engelhard Minerals & Chemicals Corporation. Production of sulfur recovery catalyst from bauxite fines. 4,061,595, Cl. 252-463.000.
Burroughs Corporation: *See—*
Dirks, Wolfgang Gerhard, 4,062,049, Cl. 360-78.000.
Burroughs, Viola F.; Vahl, Hasso G.; and Wahl, Harro W. D., to Hohbach, Harold C. Method for making an article having replicated coating with durable dielectric overcoat. 4,061,518, Cl. 156-232.000.
Burroughs Wellcome Co.: *See—*
Gorvin, John Henry, 4,061,768, Cl. 424-283.000.
Mehta, Nariman Bomanshaw; and Brieaddy, Lawrence Edward, 4,061,863, Cl. 560-18.000.
Burzynski, William Arthur: *See—*
Reimers, Fred Alan; Beckmann, Robert Martin; Burzynski, William Arthur; Tomlinson, Dennis Eugene; and Schwartz, William Henry, 4,061,973, Cl. 325-17.000.
Busch, Wolfram: *See—*
Schafer, Werner; Busch, Wolfram; Wallhausser, Hermann; Richter, Manfred; and Wilhelm, Siegfried, 4,061,710, Cl. 264-300.000.
Buss, Waldeen C., to Chevron Research Company. Hydrocarbon conversion catalyst. 4,061,592, Cl. 252-439.000.
Busse, Peter, to Richard Heinze. Detachable connector for structural members. 4,060,949, Cl. 52-285.000.
Butler, Donald E.: *See—*
Hastings, Stephen G.; Poschel, Bruno P. H.; and Butler, Donald E., 4,061,756, Cl. 424-263.000.
Butler Manufacturing Company: *See—*
Sandring, Albert W., 4,060,944, Cl. 52-43.000.
Butler, Robert W. Apparatus for producing rupture lines in flexible packages. 4,061,457, Cl. 425-385.000.
Buxton, Incorporated: *See—*
Friedman, Harvey William; and Corey, Donald Wyman, 4,060,854, Cl. 2-338.000.
Caldecott, Ross: *See—*
Young, Jonathan D.; and Caldecott, Ross, 4,062,010, Cl. 343-5.0NA.
Caldicott, Jack Richard, to Railweight Inc. (U.K.) Limited. Electronic weighing systems. 4,061,198, Cl. 177-50.000.

Caldwell, Donald Lee: *See—*
Hazelrigg, Mark Jonathan, Jr.; and Caldwell, Donald Lee, 4,061,549, Cl. 204-98.000.
Caliva, John. Automatic food roasting and basting device. 4,061,083, Cl. 99-345.000.
Callahan, Michael James, Jr.; and Hoffman, Gordon Bates, to Mostek Corporation. Dual tone multiple frequency generator. 4,061,886, Cl. 179-84.0VF.
Callender, William Boyd. Board game apparatus. 4,061,337, Cl. 273-134.0AT.
Callon, Floyd Raymond, to Heckethorn Manufacturing Co. Plastic pallet. 4,061,090, Cl. 108-51.100.
Calpis Shokuhin Kogyo Kabushiki Kaisha: *See—*
Inagami, Kaoru; Mitsui, Isamu; Nakamura, Chomatsu; and Nozaka, Toru, 4,061,792, Cl. 426-330.200.
Cameron, Donald L.: *See—*
Cameron, Tucson, 4,061,071, Cl. 84-455.000.
Cameron, Tucson, to Cameron, Donald L. Stroboscopic tuning device for musical instruments. 4,061,071, Cl. 84-455.000.
Campbell, Donald E. Hunting stand. 4,061,202, Cl. 182-20.000.
Campbell, Roy E.; Lawrence, John B.; and Tonne, Ronald Ray, to Ortloff Corporation, The. Natural gas processing. 4,061,481, Cl. 62-29.000.
Canada Square Management Ltd.: *See—*
Faiczak, John, 4,061,185, Cl. 165-48.000.
Canale, Romolo. Sole structure particularly for climbing-boots. 4,060,917, Cl. 36-59.00C.
Cannarella, Anthony. Toothpaste administering automatic toothbrush. 4,060,870, Cl. 15-24.000.
Canon Kabushiki Kaisha: *See—*
Murakami, Hiroyashu; Ito, Tadashi; Ito, Fumio; Sakurada, Nobuaki; Kawamura, Mashaharu; and Shinoda, Nobuhiko, 4,062,022, Cl. 354-38.000.
Nishikawa, Tatsuo; and Ozawa, Toshiaki, 4,061,219, Cl. 197-164.000.
Tezuka, Nobuo; Uchidoi, Masanori; Iura, Yukio; Watanabe, Satoshi; Yamamichi, Masayoshi; and Aizawa, Hiroshi, 4,062,028, Cl. 354-152.000.
Tsunekawa, Tokuichi; Uchidoi, Masanori; Shimizu, Masami; Yamamichi, Masayoshi; Murayama, Keiya; and Aizawa, Hiroshi, 4,062,024, Cl. 354-60.00R.
Cantrell, Cyrus D.; Carbone, Robert J.; and Cooper, Ralph S., to United States of America, Energy Research & Development Administration. Infrared laser system. 4,061,921, Cl. 250-423.00P.
Caprara, Giuseppe: *See—*
Fumagalli, Carlo; Caprara, Giuseppe; and Roffia, Paolo, 4,061,868, Cl. 560-246.000.
Carbone, Jorge L. Modified piano striking mechanism. 4,061,067, Cl. 84-236.000.
Carbone, Robert J.: *See—*
Cantrell, Cyrus D.; Carbone, Robert J.; and Cooper, Ralph S., 4,061,921, Cl. 250-423.00P.
Carbonnel, Henri, to Groupement pour les Activites Atomiques et Avancees "GAAA" S.A. Fluid-tight cold-chamber pressure casting apparatus. 4,061,176, Cl. 164-61.000.
Carborundum Company, The: *See—*
Cichy, Paul, 4,061,699, Cl. 264-5.000.
Cardoso, LeRoy A., to Blomberg Glass. Secondary lock for sliding door or window. 4,061,372, Cl. 292-207.000.
Carl Zeiss Stiftung: *See—*
Starp, Franz, 4,062,030, Cl. 354-286.000.
Carlsson, Carl-Eric Waldenburg; and Holmstedt, Goran Solve, to Jeppson, Nils. System for selective detection and indication of impacts upon a base surface. 4,062,008, Cl. 340-323.00R.
Carnahan, Joe B.; and Koenig, Robert B., to Recognition Equipment Incorporated. Rotational strain relief with inline plug. 4,061,380, Cl. 339-8.00R.
Carolina Steel & Wire Corporation: *See—*
Alexander, Robert W.; and Keck, John G., 4,061,553, Cl. 204-114.000.
Carroll, Glenn T. Reinforced concrete catch basin cover and lid. 4,061,434, Cl. 404-4.000.
Carstens, Bernard A., Jr.; and Carstens, Robert L., to Chicago Bullet Proof Equipment Company. Teller protection unit. 4,061,093, Cl. 109-19.000.
Carstens, Robert L.: *See—*
Carstens, Bernard A., Jr.; and Carstens, Robert L., 4,061,093, Cl. 109-19.000.
Carter, Lewis H. Roller skates. 4,061,348, Cl. 280-11.210.
Cary, John W.; and Heinemann, William H., Jr., to United States of America, Agriculture. Magnetic seed delivery autodibble planter. 4,061,094, Cl. 111-89.000.
Cascio, Giuseppe: *See—*
Manghisi, Elso; Cascio, Giuseppe; and Fregnan, Giancarlo, 4,061,637, Cl. 260-268.0PH.
Cassella Farbwerke Mainkur AG: *See—*
Fleckenstein, Erwin; Heinrich, Ernst; and Mohr, Reinhard, 4,061,642, Cl. 260-295.50A.
Castagna, Eugene Gennaro, to Dart Industries Inc. Low temperature impact strength molding compositions. 4,061,694, Cl. 260-878.00B.
Catena, Raymond. Pole inserter. 4,061,301, Cl. 248-156.000.
Caterpillar Tractor Co.: *See—*
Blomstrom, Gary D., 4,061,393, Cl. 296-28.00C.
Easter, Rollen G.; and Hooker, James A., 4,061,073, Cl. 85-62.000.
Hamsher, James J., 4,061,867, Cl. 560-219.000.
Cavalla, John Frederick; and Archibald, John Leheup, to John Wyeth & Brother Limited. 2-(Benzamido piperidine) quinolyl derivatives. 4,061,640, Cl. 260-287.0CE.
CAW Industries, Inc.: *See—*
Willard, John Wesley, 4,061,734, Cl. 424-155.000.
Cecka, Andrew M.; and Dano, Pol, to Fansteel Inc. Method of making composite high strength to weight structure. 4,061,520, Cl. 156-245.000.
Ceraver S.A.: *See—*
Willem, Michel, 4,061,515, Cl. 156-73.600.
Ceskoslovenska akademie ved: *See—*
Sedlacek, Pavel; and Hajek, Jiri, 4,061,966, Cl. 324-207.000.
Chakrabarti, Jiban Kumar; Hotten, Terrence Michael; and Tupper, David Edward, to Lilly Industries, Limited. Halogenated amino methyl adamantane derivatives. 4,061,774, Cl. 424-325.000.
Chambers, Charles W., Jr., to Lorain Products Corporation. Repeater for transmission lines of differing lengths. 4,061,883, Cl. 179-16.00F.
Chan, Rosalind Po Kuen, to Biorex Laboratories Limited. Glycyrrhetinic acid derivatives. 4,061,773, Cl. 424-313.000.
Chandler Evans Inc.: *See—*
Pech, Karl H., 4,061,439, Cl. 415-18.000.
Charles, George Kenneth, to Wincanton Engineering Limited. Method for forming blocks of natural cheese from cheese curd. 4,061,794, Cl. 426-486.000.
Chave, Henri, to Ugine Aciers. Extension rod for percussive drilling tool. 4,061,433, Cl. 403-359.000.
Chemed Corporation: *See—*
Jacob, Jose T., 4,061,589, Cl. 252-389.00A.
Chemelec Products, Inc.: *See—*
Dutton, Frederick O., III; and Stewart, Joseph H., Jr., 4,061,517, Cl. 156-212.000.
Chemische Werke Huls Aktiengesellschaft: *See—*
Kaufhold, Manfred; and Wulf, Horst-Dieter, 4,061,687, Cl. 260-632.0HF.
Sistig, Eberhard; and Reinermann, Karl-Heinz, 4,061,848, Cl. 526-61.000.
Chen, Pictiaw: *See—*
Fridley, Robert B.; Chen, Pictiaw; Mehlschau, James J.; and Claypool, Lawrence L., 4,061,020, Cl. 73-81.000.
Cheng, King Y.: *See—*
Motley, David M.; Salman, Naif D.; and Cheng, King Y., 4,061,978, Cl. 325-324.000.
Cheng, Wen-Jiu, to Dow Chemical Company, The. Viscosity reduction of cellulose derivatives. 4,061,859, Cl. 536-88.000.
Chevron Research Company: *See—*
Buss, Waldeen C., 4,061,592, Cl. 252-439.000.
Chew, William M.; Ayers, Orval E.; Murfree, James A.; and Martignoni, Pasquale, to United States of America, Army. Solid propellants for generating hydrogen. 4,061,512, Cl. 149-22.000.
Chiba Communications Industries, Inc.: *See—*
Kotezawa, Katsutaka; Onodera, Toshimi; Hayashi, Setsuo; and Shimanuki, Fujio, 4,062,016, Cl. 343-178.000.
Chicago Bullet Proof Equipment Company: *See—*
Carstens, Bernard A., Jr.; and Carstens, Robert L., 4,061,093, Cl. 109-19.000.
Chicago Pneumatic Tool Company: *See—*
Marcantonio, Livio F.; and D'Haem, Marcel P., 4,061,039, Cl. 73-489.000.
Chillier-Duchatel, Nicole; and Verger, Bernard, to Societe Generale de Constructions Electriques et Mecaniques "Alsthom et Cie". Electrochemical method for producing oxygen. 4,061,554, Cl. 204-129.000.
Chitis, Wolf, to Fondedile S.p.A. Process for providing a foundation pile for alternating compressive and tractive stresses and a pile thus provided. 4,060,994, Cl. 61-53.600.
Chloride Group Limited: *See—*
Foulkes, Stanley Charles, 4,061,843, Cl. 429-136.000.
Cho, Chi-Liang. Correcting device for typewriters. 4,061,220, Cl. 197-181.000.
Cholin, John M.; and Cholin, Rodger R. Fire extinguishing agent distributing device. 4,061,192, Cl. 169-16.000.
Cholin, Rodger R.: *See—*
Cholin, John M.; and Cholin, Rodger R., 4,061,192, Cl. 169-16.000.
Christian, Robert E.: *See—*
Bottom, Virgil E.; and Christian, Robert E., 4,060,888, Cl. 29-628.000.
Christopher, Nathan H. Lean charge ignition system. 4,061,114, Cl. 123-32.0SJ.
Christy, Charles A. Positive displacement vane type rotary pump. 4,061,450, Cl. 418-253.000.
Chudleigh, Walter H., Jr.: *See—*
Preston, Glenn W.; Chudleigh, Walter H., Jr.; and Ehrich, William G., 4,062,011, Cl. 343-7.00A.
Chupick, Ronald, to General Motors Corporation. Energy managing bumper system for vehicles. 4,061,386, Cl. 293-86.000.
Ciba-Geigy Corporation: *See—*
Greuter, Hans; and Bellus, Daniel, 4,061,644, Cl. 260-296.00R.
Karrer, Friedrich, 4,061,683, Cl. 260-613.00R.
Kirchmayr, Rudolf; and Illy, Hugo, 4,061,604, Cl. 260-2.5AJ.
Kormany, Geza; Kabas, Guglielmo; Schlapfer, Hans; and Siegrist, Adolf Emil, 4,061,860, Cl. 542-462.000.
Riccio, Pasquale R., 4,061,252, Cl. 222-402.180.
Rody, Jean, 4,061,631, Cl. 544-53.000.
Urech, Jakob, 4,061,853, Cl. 544-30.000.
Cichy, Paul, to Carborundum Company, The. Continuous process for producing oxide refractory material. 4,061,699, Cl. 264-5.000.

Cincinnati Milacron, Inc.: *See—*
White, William Page; and Hawkins, Kenneth Robert, 4,060,942, Cl. 51-268.000.
Citizen Watch Company Limited: *See—*
Natori, Minoru; Hatuse, Toshikazu; Kawanobe, Kouhei; Ogawa, Hiroshi; Sekiya, Fukuo; Ebihara, Heihachiro; and Uchino, Misao, 4,060,974, Cl. 58-23.00R.
Yamaguchi, Sizuo, 4,060,975, Cl. 58-50.00R.
Claeson, Karl Goran: *See—*
Af Ekenstam, Bo Thuresson; Aurell, Leif Eric; Claeson, Karl Goran; and Karlsson, Birgitta Gunilla, 4,061,625, Cl. 260-112.50R.
Clancy, John F.; and Welter, Clarence L. Modular vault-type load break switch. 4,061,896, Cl. 200-323.000.
Clark, Anthony W.; and Stubbs, Rex G., Jr., to Beckett Corporation. System and method for maintaining a liquid level. 4,061,442, Cl. 417-36.000.
Clark, George B., to Dow Chemical Company, The. Assembly of permeable hollow fibers and a tubesheet supportable at its face and opened by bores parallel thereto. 4,061,574, Cl. 210-321.00R.
Clarke, John L., Jr., to Clarke Outdoor Spraying Co., Inc. Mosquito larvae dipper. 4,061,038, Cl. 73-427.000.
Clarke Outdoor Spraying Co., Inc.: *See—*
Clarke, John L., Jr., 4,061,038, Cl. 73-427.000.
Clary, Jerome Francis; Wiley, Robert Emerson; and Bowns, Richard Earl, to Acheson Industries, Inc. Electrically conductive rear view mirror. 4,061,601, Cl. 252-511.000.
Claypool, Lawrence L.: *See—*
Fridley, Robert B.; Chen, Pictiaw; Mehlschau, James J.; and Claypool, Lawrence L., 4,061,020, Cl. 73-81.000.
Cline, William E.: *See—*
King, James L., Sr.; King, James L., Jr.; and Cline, William E., 4,061,286, Cl. 242-56.00R.
Coats Company, Inc., The: *See—*
Daly, Robert V., 4,061,173, Cl. 157-1.170.
Cogan, Fredrick Thomas: *See—*
Gumb, Beverley William; Kuhfus, Gerd; and Cogan, Fredrick Thomas, 4,061,411, Cl. 339-159.00R.
Cohen, Lester Samuel; and Lewis, William Dein, to Du Pont de Nemours, E. I., and Company. Oil filter. 4,061,572, Cl. 210-168.000.
Coherent Radiation: *See—*
Barker, Gerald C., 4,061,986, Cl. 331-94.5PE.
Colbert, Richard P.; Dimitriou, George; Jones, Max E.; and Haberman, Jack I., to United States of America, Navy. Digital radar signal processor. 4,062,012, Cl. 343-7.00A.
Cole, Keith M., Jr., to General Foods Corporation. Continuous double coating-natural cereal. 4,061,790, Cl. 426-303.000.
Coleman, John R.; and McDaniel, Dwight W., to General Motors Corporation. Cup seal for use in a master cylinder. 4,061,346, Cl. 277-205.000.
Colgate-Palmolive Company: *See—*
Klisch, Stephen Cajetan; and Martin, Charles Andrew, 4,061,586, Cl. 252-153.000.
Rockefeller, Winston C., 4,061,253, Cl. 222-442.000.
Rubinfeld, Joseph, 4,061,603, Cl. 252-548.000.
Collins, David N.: *See—*
Collins, Eugene C.; Collins, Stephen E.; and Collins, David N., 4,060,909, Cl. 33-296.000.
Collins, Eugene C.; Collins, Stephen E.; and Collins, David N. Surveying rod. 4,060,909, Cl. 33-296.000.
Collins, Galen R.; May, George A.; and Gendo, Indra Lee, to Dicom Systems, Ltd. Time-multiplex programmable switching apparatus. 4,061,880, Cl. 179-15.0BA.
Collins, Stephen E.: *See—*
Collins, Eugene C.; Collins, Stephen E.; and Collins, David N., 4,060,909, Cl. 33-296.000.
Color Communications, Inc.: *See—*
Lerner, Stanley; and Shearer, Robert, 4,061,521, Cl. 156-265.000.
Colorflo Limited: *See—*
Farrow, Harold F., 4,061,085, Cl. 101-150.000.
Columbia Chemical Corporation: *See—*
Rosenberg, William E., 4,061,547, Cl. 204-54.00R.
Columbia Steel Casting Co. Inc.: *See—*
McBain, Robert T.; and Johnson, Bruce C., 4,060,978, Cl. 59-78.000.
Commissariat a l'Energie Atomique: *See—*
Pigeon, Michel, 4,061,968, Cl. 324-40.000.
Compagnie Generale des Etablissements Michelin: *See—*
Boileau, Jacques; and Mathevet, Albert, 4,061,171, Cl. 152-352.00R.
Compagnie Industrielle Radioelectrique: *See—*
Durrer, Franz, 4,061,436, Cl. 408-3.000.
Computer Peripherals, Inc.: *See—*
Sachuk, Daniel B.; and Lane, Robert L., 4,061,329, Cl. 271-10.000.
Concraig Holdings Limited: *See—*
Craig, Ashley Graham, 4,060,863, Cl. 5-337.000.
Conrow, Ransom Brown; Bernstein, Seymour; and Bauman, Norman, to American Cyanamid Company. Bis-substituted naphthalene-azo phenyleneazo-stilbene-disulfonic and naphthalene-sulfonic acid. 4,061,627, Cl. 260-178.000.
Consolidated Video Systems, Inc.: *See—*
Tallent, Michael W.; Scaggs, Lee E.; Swain, Allan L.; Harrison, Ronnie M.; and Hendershot, William B., III, 4,062,041, Cl. 358-8.000.
Continental Group, Inc., The: *See—*
Khoury, Nick S., 4,061,243, Cl. 220-269.000.
Contraves AG: *See—*
Schattmaier, Kurt, 4,061,304, Cl. 248-404.000.
Control Data Corporation: *See—*
Preston, Glenn W.; Chudleigh, Walter H., Jr.; and Ehrich, William G., 4,062,011, Cl. 343-7.00A.
Conway, Malcolm J. Mental image enhancement apparatus utilizing computer systems. 4,060,915, Cl. 35-9.00A.
Cook, Edward H., Jr.; and Emery, Alvin T., to Hooker Chemicals & Plastics Corporation. Process for electrolysis. 4,061,550, Cl. 204-98.000.
Cook Electric Company: *See—*
Cwirzen, Casimir, 4,062,053, Cl. 361-119.000.
Cook, Gregory Edward. Outrigger sailboat. 4,061,099, Cl. 114-39.000.
Cook, Gregory Edward. Sail furling apparatus. 4,061,101, Cl. 114-106.000.
Cooper, James T. Fruit clipper. 4,060,962, Cl. 56-336.000.
Cooper, Ralph S.: *See—*
Cantrell, Cyrus D.; Carbone, Robert J.; and Cooper, Ralph S., 4,061,921, Cl. 250-423.00P.
Copas, Gordon A.: *See—*
Fiedler, Edgar F.; Copas, Gordon A.; and Willey, Arthur F., 4,060,959, Cl. 53-373.000.
Copp, Robert M. Bag making machine. 4,061,260, Cl. 226-139.000.
Corbett, Jack William: *See—*
Goss, John B.; Morrow, William D.; and Corbett, Jack William, 4,061,230, Cl. 212-70.000.
Cordell, Carl R., Jr. Fishing lure with weighted hook-attaching swivel and method of making same. 4,060,926, Cl. 43-42.440.
Cordell, Robert Roger, to Bell Telephone Laboratories, Incorporated. Window comparator. 4,061,932, Cl. 307-360.000.
Corey, Donald Wyman: *See—*
Friedman, Harvey William; and Corey, Donald Wyman, 4,060,854, Cl. 2-338.000.
Cornell Research Foundation, Inc.: *See—*
Finn, Robert K.; Tannahill, Alex L.; and Laptewicz, Joseph E., Jr., 4,061,585, Cl. 252-89.00R.
Zall, Robert R.; Sobel, A. Theodore; and Price, Donald R., 4,061,504, Cl. 134-95.000.
Corporation for Public Broadcasting: *See—*
Hetrich, Wayne L., 4,061,042, Cl. 73-647.000.
Cosden Technology, Inc.: *See—*
Watson, James M., 4,061,545, Cl. 203-9.000.
Costales, Manuel; and Hakki, Moustafa I. Flyer for twisting mechanisms. 4,060,969, Cl. 57-102.000.
Costello, Francis E. Plating process and bath. 4,061,802, Cl. 427-304.000.
Coster, Theo Maurice Simon, to Or Da Industries Ltd. Movable puzzle. 4,061,339, Cl. 273-157.00R.
Couchoud, Paul, to Rhone-Poulenc-Textile. Shaped polyester articles having good flame resistance and process for the production thereof. 4,061,615, Cl. 260-45.70P.
Coulon, Andre; and Perrin, Rene, to Societe General de Constructions Electriques et Macaniques Alsthom. Compound turbine rotor and method for manufacturing elements constituting such a rotor. 4,060,883, Cl. 29-156.80R.
Counsell, Patrick James Claude; and Whitehouse, Sydney Robert, to Evode Holdings Limited. Water activatable tapes. 4,061,825, Cl. 428-355.000.
Couton, Lucien. Water flushing device. 4,060,857, Cl. 4-26.000.
Cox, James L.; and Pippin, Jack M. Umbrella with interchangeable tops. 4,061,154, Cl. 135-34.000.
Cragoe, Edward J., Jr.; and Bicking, John B., to Merck & Co., Inc. Certain 16-aryloxy-11,12-seco-prostaglandins. 4,061,643, Cl. 260-295.00R.
Craig, Ashley Graham, to Concraig Holdings Limited. Cushions or pillows. 4,060,863, Cl. 5-337.000.
Cranfield Institute of Technology: *See—*
Dinsdale, Jack; McQue, David Wallace; and Vorley, Geoffrey, 4,061,952, Cl. 318-572.000.
Creagan, Robert J.; and Frisch, Erling, to United States of America, Energy Research and Development Administration. Fuel assembly for nuclear reactors. 4,061,536, Cl. 176-78.000.
Credner, Hans-Heinrich: *See—*
Monbaliu, Marcel Jacob; Mannens, Marc Godfried; Van Poucke, Raphael Karel; Credner, Hans-Heinrich; and Meier, Ernst, 4,061,498, Cl. 96-100.00R.
Crest Industries, Inc.: *See—*
Rasmussen, Harry R., 4,061,888, Cl. 179-100.00D.
Criswell, Robert Lenox: *See—*
Guido, Paul Vincent; Criswell, Robert Lenox; and Zipay, Albert John, 4,060,990, Cl. 60-676.000.
Cross Up, Inc.: *See—*
Blum, John Tudor, 4,061,354, Cl. 280-288.000.
Crouch, Donald Wayne, to General Electric Company. Vacuum-type circuit interrupter with improved protection for bellows. 4,061,894, Cl. 200-144.00B.
Crovetti, Aldo Joseph; and Stein, Robert George, to Abbott Laboratories. Certain O-substituted thiophene oxime carbamates used as antibacterial and antifungal agents. 4,061,764, Cl. 424-275.000.
Crowell, Donald Edward: *See—*
Duffield, Peter Roe; Flockton, Peter Robin; Lillis, Rupert Martin; Turner, Brian Maurice; and Crowell, Donald Edward, 4,061,706, Cl. 264-90.000.

Cummins Engine Company, Inc.: *See—*
Rajasekaran, Ramanujam; Taylor, Dennis O.; and Whittlesey, James W., 4,061,187, Cl. 165-107.000.
Cunningham, Douglas James, to Wingard Limited. Variable torque drive. 4,061,291, Cl. 242-107.000.
Cunningham, Leroy G. Fishing pole eye. 4,060,924, Cl. 43-24.000.
Cunningham, William L.; and Graham, Duane W., to Hyster Company. Load carrying fork for an industrial vehicle. 4,061,238, Cl. 214-750.000.
Cuomo, Jerome John; DiStefano, Thomas Herman; and Rosenberg, Robert, to International Business Machines Corporation. Radiation responsive device. 4,062,038, Cl. 357-30.000.
Cutler-Hammer, Inc.: *See—*
Hults, Harold W., 4,061,895, Cl. 200-157.000.
Cwirzen, Casimir, to Cook Electric Company. Protector module. 4,062,053, Cl. 361-119.000.
Daaboul, Fouad: *See—*
Adoul, Jean-Pierre; and Daaboul, Fouad, 4,061,878, Cl. 179-1.0SC.
Dacons, Joseph C.; and Sitzmann, Michael E., to United States of America, Navy. 2,5-Dipicrylfurans. 4,061,658, Cl. 260-346.110.
Dahl, Klaus-Peter, to Didier Engineering GmbH. Door locking mechanism for coke oven door. 4,061,382, Cl. 292-260.000.
Daiichi Koshuha Kogyo Kabushiki Kaisha: *See—*
Kawanami, Shunpei; and Hanamoto, Yukimitsu, 4,061,005, Cl. 72-30.000.
Daimler-Benz Aktiengesellschaft: *See—*
Kohler, Werner, 4,061,839, Cl. 429-93.000.
Daly, Robert V., to Coats Company, Inc., The. Tire servicing apparatus. 4,061,173, Cl. 157-1.170.
Dancy, Edna A.: *See—*
Fey, Maurice G.; and Dancy, Edna A., 4,061,492, Cl. 75-10.00R.
D'Angelo, Robert A., to Keystone Products, Inc. Spoke wheel antitheft clip. 4,061,400, Cl. 301-37.0AT.
Danielson, Carl G. Wrapping apparatus for pipeline joints. 4,061,513, Cl. 156-392.000.
Dano, Pol: *See—*
Cecka, Andrew M.; and Dano, Pol, 4,061,520, Cl. 156-245.000.
Dany, Franz-Josef: *See—*
Vollmer, Hartfrid; Dany, Franz-Josef; and Wortmann, Joachim, 4,061,696, Cl. 260-930.000.
Dart Industries Inc.: *See—*
Castagna, Eugene Gennaro, 4,061,694, Cl. 260-878.00B.
Dasher, George F.; O'Cull, Kathleen A.; and Schamper, Thomas J., to Alberto-Culver Company. Quaternary ammonium compounds in pretreatment of hair before shampooing with an anionic shampoo. 4,061,150, Cl. 132-7.000.
Daswick, Alexander C. Method for brewing a beverage. 4,061,793, Cl. 426-433.000.
Data General Corporation: *See—*
Masciarelli, Francis John, 4,061,900, Cl. 235-437.000.
Datta, Pabitra: *See—*
Goldman, Abraham; and Datta, Pabitra, 4,061,529, Cl. 156-644.000.
Davies, David R.: *See—*
Meijs, Franciscus H.; and Davies, David R., 4,061,191, Cl. 166-292.000.
Davies, Michael Bowen: *See—*
Pratt, Norman Leslie; and Davies, Michael Bowen, 4,062,046, Cl. 358-93.000.
Davies, Thomas R. Drip controlling spout. 4,061,255, Cl. 222-566.000.
Davis, Charles A.: *See—*
Benda, David; and Davis, Charles A., 4,061,945, Cl. 313-481.000.
Davis, Leonard C., to General Motors Corporation. Regenerator matrix. 4,061,183, Cl. 165-8.000.
Davis, Pauls: *See—*
Helfert, Herbert; Langdon, William Keith; and Davis, Pauls, 4,061,684, Cl. 260-615.00B.
Davis, William Clair: *See—*
Raisbeck, Wesley Paul; Bass, Merlyn Duane; Whicker, Bobbie Dean; Davis, William Clair; and Fairbank, Raymond Harry, 4,061,284, Cl. 241-294.000.
Davy, David Larry, to B. F. Goodrich Company, The. Brake disc adapter for use with anti-skid system. 4,061,213, Cl. 188-181.00R.
Davydov, Sergei Lvovich: *See—*
Blyakhman, Lazar Isaevich; Davydov, Sergei Lvovich; and Kashina, Valentina Fedorovna, 4,061,633, Cl. 544-106.000.
Dayco Corporation: *See—*
Duckett, John C.; Easley, Wayne W.; and Gaworowski, Andrew J., 4,061,818, Cl. 428-246.000.
Schmidt, Ernest J., Jr.; Rinehart, Michael G.; and Blevins, Bascom D., 4,061,350, Cl. 280-87.04A.
DDSA Pharmaceuticals Ltd.: *See—*
Shenoy, Umakant Devdas, 4,061,745, Cl. 424-244.000.
Dean, Anthony James, to International Computers Limited. Apparatus for testing printed circuit boards. 4,061,969, Cl. 324-73.0PC.
Dechelette, Helen; and Joly, Jean Claud, to AMP Incorporated. Method of manufacturing an electrical harness. 4,060,890, Cl. 29-628.000.
Decker, John J.; and Ricards, Charles R., to GTE Sylvania Incorporated. Method of filling electrochemical cells with electrolyte. 4,061,163, Cl. 141-7.000.
Deere & Company: *See—*
Dunn, James Knox, III; Tucker, Lee Everett; and Redman, Andrew Paul, 4,061,167, Cl. 144-34.00E.
Hengen, Edward John; and Love, Mahlon Lloyd, 4,060,960, Cl. 56-14.600.
Hilgert, Charles William; and Lobmeyer, Raymond Joseph, 4,061,576, Cl. 210-437.000.
Newhouse, Thomas Charles, 4,061,047, Cl. 74-230.17C.
Raisbeck, Wesley Paul; Bass, Merlyn Duane; Whicker, Bobbie Dean; Davis, William Clair; and Fairbank, Raymond Harry, 4,061,284, Cl. 241-294.000.
Deffeyes, Robert J.; and Tyler, Wesley R., to Graham Magnetics Incorporated. Novel metal powders and magnetic tapes produced therewith. 4,061,824, Cl. 428-328.000.
De Groef, Pierre, to N. V. Raychem S.A. Multiple conductor connector and method of connecting conductors to terminals therewith. 4,060,887, Cl. 29-626.000.
de Jonge, Jan Hendrik; and Smulders, Adrianus Josephus, to U.S. Philips Corporation. Method of and device for testing a digital memory. 4,061,908, Cl. 235-302.300.
Delalande S.A.: *See—*
Fauran, Claude P.; Eberle, Jeannine A.; Bourgery, Guy R.; Raynaud, Guy R.; and Gouret, Claude J., 4,061,855, Cl. 544-122.000.
del Castillo, Juan M. Device to identify chords on a keyboard instrument and key mechanism for use therewith. 4,061,072, Cl. 84-478.000.
Delta Plastics Limited: *See—*
Reggers, Charles Gerardus, 4,060,922, Cl. 40-302.000.
Demas, Nickolas P.: *See—*
Fitzgerald, James J.; Fortunato, Joseph J.; and Demas, Nickolas P., 4,061,940, Cl. 313-318.000.
DeMaster, Robert D., to Minnesota Mining and Manufacturing Company. Traction mat. 4,061,268, Cl. 238-14.000.
Demilie, Paul: *See—*
Verlaeten, Jean; and Demilie, Paul, 4,061,718, Cl. 423-356.000.
Demny, Thomas Casimir; and Maehr, Hubert, to Hoffmann-La Roche Inc. 2-Methyl-L-arginine produced by cultivating streptomyces strain. 4,061,542, Cl. 195-80.00R.
DeMonsy, Richard L.; and Hankins, Norman K., to Hexcel Corporation. Cable splice kit. 4,061,872, Cl. 174-138.00F.
Denzel, Theodor; and Hoehn, Hans, to E. R. Squibb & Sons. Inc. 3,11-Dihydro-6H-pyrazolo[1,5-a]pyrazolo[4',3':5,6]-pyrido[4,3-d]pyrimidin-6-one derivatives. 4,061,632, Cl. 544-60.000.
DeSantis, Raymond P., to Wolverine Aluminum Corporation. Apparatus for producing spherical articles. 4,061,452, Cl. 425-78.000.
DeSantis, Raymond P., to Wolverine Aluminum Corporation. Tooling for a powder compacting press. 4,061,453, Cl. 425-78.000.
De Schepper, Achille; and Van Peteghem, Antoine, to Metallurgie Hoboken-Overpelt. Treatment of solutions containing impure metals. 4,061,564, Cl. 210-21.000.
DesMarais, Thomas A., to Procter & Gamble Company, The. Absorbent foam articles and method of manufacture. 4,061,145, Cl. 128-275.000.
Desmarquest & C. E.C.: *See—*
Bardet, Gerard, 4,061,451, Cl. 425-66.000.
De Soto, Diogenes. Wallet supporting clip. 4,060,876, Cl. 24-3.00J.
Deutsche Gold- und Silber-Scheideanstalt vormals Roessler: *See—*
Asinger, Friedrich; Pfeifer, Wolf-Dieter; Offermanns, Heribert; Scherberich, Paul; and Schreyer, Gerd, 4,061,674, Cl. 260-534.00S.
Schwarze, Werner; Merk, Wolfgang; and Binder, Volker, 4,061,869, Cl. 526-1.000.
Development Finance Corporation: *See—*
Nixon, Peter Anthony, 4,061,033, Cl. 73-339.00R.
DeWitt, Carol Lynn Hartsock, administratrix: *See—*
DeWitt, Erik John, deceased, 4,060,940, Cl. 51-170.0PT.
DeWitt, Erik John, deceased (by DeWitt, Carol Lynn Hartsock, administratrix), to Black and Decker Manufacturing Company, The. Adjustable guard construction for cut-off machine. 4,060,940, Cl. 51-170.0PT.
Dextec Metallurgical Proprietary Limited: *See—*
Everett, Peter Kenneth, 4,061,552, Cl. 204-107.000.
Deyres, Andre: *See—*
Barbe, Gerard; and Deyres, Andre, 4,060,968, Cl. 57-140.0BY.
D'Haem, Marcel P.: *See—*
Marcantonio, Livio F.; and D'Haem, Marcel P., 4,061,039, Cl. 73-489.000.
Diamond, Julius; and Douglas, George H., to William H. Rorer, Inc. Ethynylindenyl compounds and derivatives thereof used in the treatment of pain, fever and inflammation. 4,061,771, Cl. 424-304.000.
Diamond Shamrock Corporation: *See—*
Marks, Alfred F., 4,061,770, Cl. 424-304.000.
Dicom Systems, Ltd.: *See—*
Collins, Galen R.; May, George A.; and Gendo, Indra Lee, 4,061,880, Cl. 179-15.0BA.
Dictaphone Corporation: *See—*
Whitney, James C., 4,061,292, Cl. 242-201.000.
Didier Engineering GmbH: *See—*
Dahl, Klaus-Peter, 4,061,382, Cl. 292-260.000.
DiDominico, Mario A.; and Smithgall, Harry E., to GTE Sylvania Incorporated. Cathode ray tube with supported conductor extending through exhaust tubulation. 4,061,943, Cl. 313-482.000.
Dieck, Ronald Lee; and Quinn, Edwin John, to Armstrong Cork Company. Polyphosphazene polymer/organic polymer foams. 4,061,606, Cl. 260-2.50R.
Diez, Adolf, to Karl Schmidt GmbH. Low-pressure casting apparatus. 4,061,182, Cl. 164-309.000.
Dighe, Shrikant Vishwanath: *See—*
Guthrie, James Leverette; and Dighe, Shrikant Vishwanath, 4,061,864, Cl. 560-26.000.

Digital Communications Corporation: *See—*
Walker, Andrew M.; and Gabbard, Ova Gene, 4,061,979, Cl. 325-419.000.
Dimitriou, George: *See—*
Colbert, Richard P.; Dimitriou, George; Jones, Max E.; and Haberman, Jack I., 4,062,012, Cl. 343-7.00A.
Dinsdale, Jack; McQue, David Wallace; and Vorley, Geoffrey, to Cranfield Institute of Technology. Computer-controlled machine tool. 4,061,952, Cl. 318-572.000.
Dirk, William R.; and Parker, Sidney A., to Lennox Industries, Inc. Compressor muffling arrangement. 4,061,444, Cl. 417-312.000.
Dirks, Wolfgang Gerhard, to Burroughs Corporation. Integrated Disk File Module and memory storage system. 4,062,049, Cl. 360-78.000.
DiStefano, Thomas Herman: *See—*
Cuomo, Jerome John; DiStefano, Thomas Herman; and Rosenberg, Robert, 4,062,038, Cl. 357-30.000.
Dockerty, Robert Charles: *See—*
Abbas, Shakir Ahmed; and Dockerty, Robert Charles, 4,062,040, Cl. 357-54.000.
Dr. Johannes Heidenhain GmbH: *See—*
Ernst, Alfons, 4,060,903, Cl. 33-125.00R.
Dr. Madaus & Co.: *See—*
Madaus, Rolf Hermann Heinrich; Halbach, Gunter; and Trost, Wilfried, 4,061,765, Cl. 424-278.000.
Doherty, Thomas E. Paint roller cleaning apparatus. 4,061,153, Cl. 134-138.000.
Dolfini, Joseph E.; Bohme, Ekkehard; and Slusarchyk, William A., to E. R. Squibb & Sons, Inc. 6-Amino-6-arylthio penicillanic acids and derivatives thereof. 4,061,629, Cl. 260-239.100.
Dolfini, Joseph Edward; and Bohme, Ekkehard, to E. R. Squibb & Sons, Inc. 7-Amino-7-arylthio cephalosporins. 4,061,851, Cl. 544-21.000.
Dolfini, Joseph Edward, to E. R. Squibb & Sons, Inc. 7-Methoxy furylureidocephalosporins. 4,061,852, Cl. 544-27.000.
Donlon, Joseph J. Dripless paint container. 4,061,242, Cl. 220-90.000.
Donnelly, Robert Murray, to Mostek Corporation. Current sense amp for static memory cell. 4,062,000, Cl. 365-203.000.
Dorn, Conrad P.: *See—*
Shen, Tsung-Ying; Jones, Howard; and Dorn, Conrad P., 4,061,759, Cl. 424-263.000.
Dorn, Friedrich Wilhelm: *See—*
Schallus, Erich; Mietens, Gerhard; Fucker, Gregor; Petrell, Jurgen; and Dorn, Friedrich Wilhelm, 4,061,719, Cl. 423-445.000.
Dorner, Friedrich; Scriba, Marianne; and Weil, Rudolf, to Sandoz Ltd. Enzymatically oxidizing interferon. 4,061,538, Cl. 195-29.000.
Dorren, Louis, to Quadracast Systems, Inc. Quadrature multiplying four-channel demodulator. 4,061,882, Cl. 179-15.0BT.
Doshi, Niranjan Kumar, to Apostol, Frank. Power-converting device. 4,061,445, Cl. 418-54.000.
Dotsenko, Anna Evgenievna: *See—*
Ivanova, Raisa Vasilievna; Belsky, Arkady Andreevich; Novikov, Nikolai Alexandrovich; Alexeeva, Nina Nikolaevna; Nikitina, Ljudmila Nikolaevna; Ljubimova, Nina Andreevna; and Dotsenko, Anna Evgenievna, 4,061,551, Cl. 204-105.00R.
Dougan, Patrick Daniel: *See—*
Stock, Thomas Adrian Cheetham; Dougan, Patrick Daniel; and Sivilotti, Olivo Guiseppe, 4,061,010, Cl. 72-201.000.
Douglas, George H.: *See—*
Diamond, Julius; and Douglas, George H., 4,061,771, Cl. 424-304.000.
Douglas, Thomas P. Locking hub tool. 4,061,058, Cl. 81-90.00C.
Dow Chemical Company, The: *See—*
Cheng, Wen-Jiu, 4,061,859, Cl. 536-88.000.
Clark, George B., 4,061,574, Cl. 210-321.00R.
Dubois, Robert A.; and Freedman, Harold H., 4,061,682, Cl. 260-611.00A.
Goralski, Christian T., 4,061,639, Cl. 260-283.00S.
Gross, James R.; and McFadden, Russell T., 4,061,846, Cl. 526-16.000.
Hazelrigg, Mark Jonathan, Jr.; and Caldwell, Donald Lee, 4,061,549, Cl. 204-98.000.
Pelletier, Ronald R.; Hansen, Robert D.; and Vanderbush, James J., 4,061,833, Cl. 428-511.000.
Dow Corning Corporation: *See—*
Miller, Carl W.; Vandenberg, Lester C.; and Statt, Wayne H., 4,061,709, Cl. 264-293.000.
Drews, Reinhold Alvin, to Whirlpool Corporation. Motor shield for appliance. 4,061,002, Cl. 68-212.000.
Du Pont of Canada Limited: *See—*
Duffield, Peter Roe; Flockton, Peter Robin; Lillis, Rupert Martin; Turner, Brian Maurice; and Crowell, Donald Edward, 4,061,706, Cl. 264-90.000.
Dubied, Gilbert; and Kuenzi, Ernst, to Laboratoire Suisse de Recherches Horlogeres. Device of plane-parallel treatment of surfaces. 4,060,939, Cl. 51-157.000.
Dubois, Robert A.; and Freedman, Harold H., to Dow Chemical Company, The. Preparation of symmetrical ethers. 4,061,682, Cl. 260-611.00A.
DuBose, Charles Ray, to Hycel, Inc. Calibration in a blood analyzer. 4,061,469, Cl. 23-253.00R.
Ducharme, Gerald Louis: *See—*
Hannie, David Eugene; and Ducharme, Gerald Louis, 4,061,496, Cl. 96-29.00D.
Duckett, John C.; Easley, Wayne W.; and Gaworowski, Andrew J., to Dayco Corporation. Printing blanket containing high strength filaments. 4,061,818, Cl. 428-246.000.
Duffield, Peter Roe; Flockton, Peter Robin; Lillis, Rupert Martin; Turner, Brian Maurice; and Crowell, Donald Edward, to Du Pont of Canada Limited. Process for the continuous melt thermoforming of polymers. 4,061,706, Cl. 264-90.000.
Dunn, Donnell Lynn, to J. I. Case Company. Hydraulic system with dual pumps for tractor brake, steering, and loader valves. 4,061,201, Cl. 180-133.000.
Dunn, James Knox, III; Tucker, Lee Everett; and Redman, Andrew Paul, to Deere & Company. Single piece tree shear blade having cylindrically curved cutting portion and method of making same. 4,061,167, Cl. 144-34.00E.
Du Pont de Nemours, E. I., and Company: *See—*
Cohen, Lester Samuel; and Lewis, William Dein, 4,061,572, Cl. 210-168.000.
Makar, Kamel Michel, 4,061,598, Cl. 252-466.0PT.
Moore, Earl P., Jr., 4,061,590, Cl. 252-426.000.
Weigert, Frank Julian, 4,061,685, Cl. 260-621.00G.
Duranleau, Roger G.: *See—*
Love, Richard F.; and Duranleau, Roger G., 4,061,651, Cl. 260-307.00H.
Durrant, Oliver W., to Babcock & Wilcox Company, The. Control system for a nuclear power producing unit. 4,061,533, Cl. 176-20.00R.
Durrer, Franz, to Compagnie Industrielle Radioelectrique. Banknote invalidating machine. 4,061,436, Cl. 408-3.000.
Dutton, Frederick O., III; and Stewart, Joseph H., Jr., to Chemelec Products, Inc. Method of making fluorocarbon resin covered gaskets. 4,061,517, Cl. 156-212.000.
Dybas, Richard A.; Grier, Nathaniel; and Witzel, Bruce E., to Merck & Co., Inc. Polyamine compounds as antibacterial agents. 4,061,775, Cl. 424-330.000.
Dybel, Frank R.: *See—*
Dybel, William P.; and Dybel, Frank R., 4,062,055, Cl. 361-160.000.
Dybel, William P.; and Dybel, Frank R. Load monitoring system with high and low load control. 4,062,055, Cl. 361-160.000.
Dyki, Joseph J., to Firestone Tire & Rubber Company, The. Buckle switch. 4,060,878, Cl. 24-230.00A.
Dysart, Charles E. Mounting structure for a vehicle accessory such as a CB radio or the like. 4,061,258, Cl. 224-42.42R.
E.L.A.P.: *See—*
Magneron, Jean, 4,061,970, Cl. 325-2.000.
E. Mollers, Firma: *See—*
Birkenfeld, Richard; and Jaschke, Reinhold, 4,060,957, Cl. 53-26.000.
E. R. Squibb & Sons, Inc.: *See—*
Denzel, Theodor; and Hoehn, Hans, 4,061,632, Cl. 544-60.000.
Dolfini, Joseph E.; Bohme, Ekkehard; and Slusarchyk, William A., 4,061,629, Cl. 260-239.100.
Dolfini, Joseph Edward; and Bohme, Ekkehard, 4,061,851, Cl. 544-21.000.
Dolfini, Joseph Edward, 4,061,852, Cl. 544-27.000.
Sprague, Peter W., 4,061,655, Cl. 260-315.000.
Eagle-Picher Industries, Inc.: *See—*
Lowder, James E.; and Perry, Gary D., 4,061,392, Cl. 296-28.00C.
Easley, Wayne W.: *See—*
Duckett, John C.; Easley, Wayne W.; and Gaworowski, Andrew J., 4,061,818, Cl. 428-246.000.
Easter, Rollen G.; and Hooker, James A., to Caterpillar Tractor Co. Controllably deformable fastener assembly. 4,061,073, Cl. 85-62.000.
Eastman Kodak Company: *See—*
Hannie, David Eugene; and Ducharme, Gerald Louis, 4,061,496, Cl. 96-29.00D.
Jones, Glenn C.; and Meen, Ronald H., 4,061,548, Cl. 204-78.000.
Rushing, Allen J., 4,061,222, Cl. 198-807.000.
Wilkes, Glenn R.; and Brault, Albert T., 4,061,497, Cl. 96-77.000.
Eaton Corporation: *See—*
Keene, Derek K.; and Hinde, Walter R., 4,061,053, Cl. 74-512.000.
Tinholt, Thomas H., 4,061,218, Cl. 192-58.00B.
Eaves, Ronald Spencer, to Ernest Scragg & Sons Limited. Yarn texturing machine. 4,060,964, Cl. 57-34.0HS.
Ebauches S.A.: *See—*
Rochat, Daniel, 4,060,977, Cl. 58-85.500.
EBCO Manufacturing Company: *See—*
Radcliffe, Richard J., 4,061,184, Cl. 165-38.000.
Eberle, Jeannine A.: *See—*
Fauran, Claude P.; Eberle, Jeannine A.; Bourgery, Guy R.; Raynaud, Guy R.; and Gouret, Claude J., 4,061,855, Cl. 544-122.000.
Ebihara, Heihachiro: *See—*
Natori, Minoru; Hatuse, Toshikazu; Kawanobe, Kouhei; Ogawa, Hiroshi; Sekiya, Fukuo; Ebihara, Heihachiro; and Uchino, Misao, 4,060,974, Cl. 58-23.00R.
Echte, Adolf: *See—*
Wild, Hans; Jung, Rudolf; Echte, Adolf; Zizlsperger, Johann; and Gausepohl, Hermann, 4,061,858, Cl. 526-67.000.
Eda, Yasuko: *See—*
Yamada, Hirotada; Okamura, Kosaku; Tobiki, Hisao; Tanno, Norihiko; Shimago, Kozo; Nakagome, Takenari; Komatsu, Toshiaki; Izawa, Akio; Noguchi, Hiroshi; Irie, Kenji; and Eda, Yasuko, 4,061,748, Cl. 424-246.000.
Edgar, Miriam E.: *See—*
Edgar, Robert G.; and Edgar, Miriam E., 4,061,122, Cl. 123-169.00R.
Edgar, Robert G.; and Edgar, Miriam E. Spark plug. 4,061,122, Cl. 123-169.00R.
Edmondson, Morris S., to Petro-Tex Chemical Corporation. Emulsion polymerization of chloroprene in the presence of a polysulfide modifier. 4,061,850, Cl. 526-220.000.

Edson Tool & Manufacturing Company, Inc.: *See*—
Prather, Joseph E.; and Khalifa, Ramzi A., 4,061,371, Cl. 292-198.000.
Edwards, Bryan William, to Foseco International Limited. Fixing of shaped bodies to metal casting moulds. 4,061,174, Cl. 164-6.000.
Edwards, Lindell N. Signboard. 4,060,920, Cl. 40-140.000.
Edwards, Nigel, to National Research Development Corporation. Surgical use of a laryngeal prosthesis. 4,060,856, Cl. 3-1.300.
Ehinger, Adolf. Arrangement for comminuting and/or shredding of paper and synthetic materials. 4,061,278, Cl. 241-74.000.
Ehlers, Bernd: *See*—
Rothgordt, Ulf; Ehlers, Bernd; Bunge, Ernst; and Piotrowski, Herbert, 4,062,014, Cl. 340-347.0DD.
Ehrich, William G.: *See*—
Preston, Glenn W.; Chudleigh, Walter H., Jr.; and Ehrich, William G., 4,062,011, Cl. 343-7.00A.
Eisai Co., Ltd.: *See*—
Kijima, Shizumasa; Yamatsu, Isao; Minami, Norio; and Inai, Yuichi, 4,061,660, Cl. 260-396.00R.
Eitzen, Vincent Elliott; and Moore, Robert Rockwell, to American Hospital Supply Corporation. Orbital platform stirring system. 4,061,315, Cl. 366-111.000.
Ekman, Bo Magnus: *See*—
Sjoholm, Ingvar Gosta Holger; Lindmark, Nils Roger; and Ekman, Bo Magnus, 4,061,466, Cl. 23-230.0B.
Electricity Council, The: *See*—
Jones, Ivor Wynn; Robinson, Graham; and Bird, Thomas Lewis, 4,061,840, Cl. 429-104.000.
Electro-Therm, Inc.: *See*—
Skinner, Charles A., 4,061,412, Cl. 339-263.00R.
Electrohome Limited: *See*—
Ott, Arthur Richard, 4,062,042, Cl. 358-27.000.
Electronic Associates, Inc.: *See*—
Hannauer, George; and Asthana, Abhaya, 4,061,904, Cl. 364-608.000.
Eli Lilly and Company: *See*—
Herron, David K., 4,061,630, Cl. 544-16.000.
Lunn, William H. W., 4,061,861, Cl. 544-30.000.
McDougald, Larry R., 4,061,755, Cl. 424-263.000.
Shields, James E., 4,061,607, Cl. 260-8.000.
Shields, James E., 4,061,626, Cl. 260-112.50S.
Ellendt, Gunther: *See*—
Knofel, Hartmut; and Ellendt, Gunther, 4,061,678, Cl. 260-570.00D.
Elsaesser, Fred L.; and Hall, Joseph H., to United Technologies Corporation. Stall warning detector for gas turbine engine. 4,060,979, Cl. 60-39.030.
Elsaesser, Fred L.; and Hall, Joseph H., to United Technologies Corporation. Stall detector for a gas turbine engine. 4,060,980, Cl. 60-39.030.
Elsas, Norman E., to Louisville Bedding Company. Quilted material mending system. 4,061,096, Cl. 112-121.140.
Elvin, John D. F.: *See*—
Palmer, John P.; Isbister, Stephen W.; and Elvin, John D. F., 4,061,369, Cl. 292-163.000.
Emelyanenko, July Georgievich: *See*—
Paton, Boris Evgenievich; Medovar, Boris Izrailevich; Baglai, Vitaly Mikhailovich; Latash, Jury Vadimovich; Emelyanenko, July Georgievich; Stupak, Leonid Mikhailovich; Alferov, Jury Fedorovich; Bondarenko, Oleg Petrovich; Schupak, Grigory Bentsionovich; Shuruev, Lev Andreevich; Khasin, Kim Moiseevich; Frolov, Jury Fedorovich; Salmin, Valery Vasilievich; Lugovsky, Vladimir Ivanovich; Marjuschenko, Vilen Fedorovich; Shaburov, Fedor Fedorovich; Schelkunov, Jury Andreevich, deceased; and Schelkunova, Margarita Petrovna, administratrix, 4,061,180, Cl. 164-252.000.
Emerson, Reginald Stanley, to Leslie Hartridge Limited. Fuel injector testing apparatus. 4,061,027, Cl. 73-119.00A.
Emery, Alvin T.: *See*—
Cook, Edward H., Jr.; and Emery, Alvin T., 4,061,550, Cl. 204-98.000.
EMG Hydraulics, Inc.: *See*—
Greer, Edward M., 4,061,161, Cl. 138-30.000.
Endres, Thomas E.; and Rodeman, Donald W., to General Motors Corporation. Voltage variable capacitor tuned radio receiver having delayed automatic frequency control at turn-on. 4,061,981, Cl. 325-419.000.
Engelfried, Otto: *See*—
Wiechert, Rudolf; Kerb, Ulrich; and Engelfried, Otto, 4,061,661, Cl. 260-397.450.
Engelhard Minerals & Chemicals Corporation: *See*—
Burns, Robert A., 4,061,595, Cl. 252-463.000.
English Clays Lovering Pochin & Company Limited: *See*—
Windle, William, 4,061,502, Cl. 106-72.000.
Enterprise Incorporated: *See*—
Marks, Ronald H.; Marks, Paul D.; and Goodman, Lawrence R., 4,060,999, Cl. 66-125.00A.
Erb, Lee A.: *See*—
Solheim, Fredrick S.; and Erb, Lee A., 4,062,006, Cl. 340-228.00R.
Erdelyi, Gabor. Film with light sound track carrying the stereophonic sound information; ribbon light valve for providing the light sound track as well as light sound adapter for reproducing the information recorded on. 4,061,889, Cl. 179-100.30T.
Eriksoo, Edgar; and Ohlsson, Korfitz Bengt-Ingvar, to Aktiebolaget Leo. Antidepressant composition. 4,061,747, Cl. 424-244.000.
Ernest Scragg & Sons Limited: *See*—
Eaves, Ronald Spencer, 4,060,964, Cl. 57-34.0HS.
Ernst, Alfons, to Dr. Johannes Heidenhain GmbH. Compensation of errors in incremental measuring or positioning instruments. 4,060,903, Cl. 33-125.00R.
Ertel, Hartmut; Heubach, Gunther; and Wolf, Erhard, to Hoechst Aktiengesellschaft. Cyano acetic acid anilide derivatives, process for their manufacture and compositions containing these compounds. 4,061,767, Cl. 424-282.000.
Erwin, Curtis L., Jr. Fuel measuring system for engines and method of monitoring fuel flow. 4,061,024, Cl. 73-114.000.
Escher Wyss GmbH: *See*—
Biondetti, Mario, 4,061,532, Cl. 162-352.000.
Kahmann, Albrecht, 4,061,283, Cl. 241-261.300.
Esco Corporation: *See*—
Hahn, Frederick C.; and Jones, Larren F., 4,061,432, Cl. 403-318.000.
Eskeli, Michael. Thermodynamic machine with step type heat exchangers. 4,060,989, Cl. 60-650.000.
Essen, R. Eric, to Intec Industries Inc. Thermometer case and holder. 4,061,226, Cl. 206-306.000.
Essex Group, Inc.: *See*—
Vogel, Ralph A., 4,061,947, Cl. 318-77.000.
ETA A.G. Ebauches-Fabrik: *See*—
Jakob, Edwin, 4,060,976, Cl. 58-58.000.
Evans, David G., to United States of America, Army. Fail safe battery. 4,061,842, Cl. 429-116.000.
Evans, Dorothy D.: *See*—
Evans, Frank E.; and Evans, Dorothy D., 4,061,360, Cl. 280-652.000.
Evans, Frank E.; and Evans, Dorothy D. Collapsible golf bag cart. 4,061,360, Cl. 280-652.000.
Everett, Peter Kenneth, to Dextec Metallurgical Proprietary Limited. Electrolytic production of copper from ores and concentrates. 4,061,552, Cl. 204-107.000.
Evers, William J.; Heinsohn, Howard H., Jr.; and Vock, Manfred Hugo, to International Flavors & Fragrances Inc. Uses of α-oxy(oxo) sulfides and ethers in foodstuffs and flavors for foodstuffs. 4,061,795, Cl. 426-535.000.
Evers, William J.; Heinsohn, Howard H., Jr.; and Vock, Manfred Hugo, to International Flavors & Fragrances Inc. Uses of α-oxy(oxo) sulfides and ethers in foodstuffs and flavors for foodstuffs. 4,061,796, Cl. 426-535.000.
Evode Holdings Limited: *See*—
Counsell, Patrick James Claude; and Whitehouse, Sydney Robert, 4,061,825, Cl. 428-355.000.
Ewald, John S.: *See*—
Last, Anthony J., 4,061,922, Cl. 250-461.00R.
F & B Mfg. Co.: *See*—
Kauffmann, J. H., 4,061,139, Cl. 228-107.000.
Fabian, Emil L. Self-centering toilet valve. 4,060,858, Cl. 4-57.00R.
Fabrichev, Jury Nikolaevich: *See*—
Kaporovich, Vladimir Georgievich; Sereda, Viktor Grigorievich; Udovenko, Vitaly Kirillovich; Zelenskaya, Nadezhda Nikolaevna; Brazhnik, Viktor Yakovlevich; Sviridov, Evgeny Pavlovich; and Fabrichev, Jury Nikolaevich, 4,061,009, Cl. 72-69.000.
Fabris, Hubert J.; Gruber, David P.; Sponseller, David R.; and Uelzmann, Heinz, to General Tire & Rubber Company, The. Copolymers of hydrazides and certain unsaturated esters. 4,061,845, Cl. 526-11.100.
Fadden, Delmar M.: *See*—
Gupta, Alankar; and Fadden, Delmar M., 4,061,996, Cl. 340-27.00R.
Faiczak, John, to Canada Square Management Ltd. Temperature control system. 4,061,185, Cl. 165-48.000.
Fairbank, Raymond Harry: *See*—
Raisbeck, Wesley Paul; Bass, Merlyn Duane; Whicker, Bobbie Dean; Davis, William Clair; and Fairbank, Raymond Harry, 4,061,284, Cl. 241-294.000.
Fairchild Camera and Instrument Corporation: *See*—
Hosack, Harold H., 4,061,530, Cl. 156-653.000.
Falchi, Ennio. Composite cigarette enveloping material. 4,061,147, Cl. 131-4.00A.
Fansteel Inc.: *See*—
Cecka, Andrew M.; and Dano, Pol, 4,061,520, Cl. 156-245.000.
Fariss, James Douglas, Jr., to Innovation Enterprises, Inc. Log splitting device. 4,061,168, Cl. 144-193.00R.
Farr, William. Frame holder. 4,061,321, Cl. 269-41.000.
Farrow, Harold F., to Colorflo Limited. Fluid injector. 4,061,085, Cl. 101-150.000.
Fasano, Osvaldo, to Start S.p.A. Studi Apparecchiature e Richerche Tecniche. Device for automatically compensating for wear in the braking systems of motor vehicles. 4,061,210, Cl. 188-79.50P.
Faulkner, Albert A.: *See*—
Levine, Marshall S.; and Faulkner, Albert A., 4,061,108, Cl. 118-100.000.
Fauran, Claude P.; Eberle, Jeannine A.; Bourgery, Guy R.; Raynaud, Guy R.; and Gouret, Claude J., to Delalande S.A. Pyrimidin-6-yl acethydroxamic acids. 4,061,855, Cl. 544-122.000.
Feess, Erich: *See*—
von der Eltz, Hans-Ulrich; Feess, Erich; and Glander, Siegfried, 4,061,001, Cl. 68-200.000.
Felburn, J. Phil. Vehicle suspensions. 4,061,361, Cl. 280-681.000.
Felker, Paul J.; and Owen, Shubel H. Fractioning autogenous triturator. 4,061,276, Cl. 241-69.000.
Fend, Fritz: *See*—
Reis, August; Fend, Fritz; and Hils, Karl, 4,061,556, Cl. 204-271.000.

Ferguson, William Alexander: *See*—
Washburn, Owen Victor; Kouvarellis, Georgeos Konstandenos; and Ferguson, William Alexander, 4,061,565, Cl. 210-32.000.
Feser, Manfred; Joerchel, Egon; and Korinth, Jurgen, to Hoechst Aktiengesellschaft. Process for preparing concentrated tetrafluoroboric acid. 4,061,723, Cl. 423-276.000.
Fettweis, Alfred, to Siemens Aktiengesellschaft. Filter having frequency-dependent transmission properties for electric analog signals. 4,061,905, Cl. 364-724.000.
Fey, Maurice G.; and Dancy, Edna A., to Westinghouse Electric Corporation. Method of ore reduction with an arc heater. 4,061,492, Cl. 75-10.00R.
Fiber Industries Inc.: *See*—
Talbot, James Richard, 4,060,970, Cl. 57-140.00R.
Ficek, Jan, to Przedsiebiorstwo Projektowania i Wyposazania Zakladow Przemyslu Maszyn i Aparatow Ekejtrtczbtcg "Promel". Apparatus for centrifugal casting in split molds. 4,061,181, Cl. 164-292.000.
Fiedler, Edgar F.; Copas, Gordon A.; and Willey, Arthur F., to Anderson Bros. Mfg. Co. Wrapper end folding and sealing apparatus. 4,060,959, Cl. 53-373.000.
Fielding, Ivor R.: *See*—
Poppe, Wassily; and Fielding, Ivor R., 4,061,835, Cl. 428-522.000.
Filipiev, Oleg Vladimirovich: *See*—
Andoniev, Sergei Mikhailovich; Granovsky, Boris Ruvimovich; Golod, Leonid Davydovich; Kudinov, Gennady Alexandrovich; Kasyanov, Grigory Ivanovich; Filipiev, Oleg Vladimirovich; Tseluiko, Jury Ivanovich; and Lysenko, Evgeny Eliseevich, 4,061,317, Cl. 266-193.000.
Finigan, George D.; May, Brian E.; and Zaininger, Henry W., to Systems Using Nature Ltd. Solar heat educational device. 4,060,916, Cl. 35-10.000.
Finn, Robert K.; Tannahill, Alex L.; and Laptewicz, Joseph E., Jr., to Cornell Research Foundation, Inc. Method of using heteropolysaccharides produced by the fermentation of methanol. 4,061,585, Cl. 252-89.00R.
Firestone Tire & Rubber Company, The: *See*—
Dyki, Joseph J., 4,060,878, Cl. 24-230.00A.
First National Bank of Akron, Trustee, The: *See*—
McGinnis, Hebert E., 4,061,223, Cl. 198-821.000.
Fisch, Ichak: *See*—
Fisch, Shlomo Chaim; and Fisch, Ichak, 4,060,987, Cl. 60-409.000.
Fisch, Shlomo Chaim; and Fisch, Ichak. Turbine drive system. 4,060,987, Cl. 60-409.000.
Fish, Frank L., to Weaver Engineering & Mfg. Co. Pipe pressure testing device. 4,061,015, Cl. 73-49.500.
Fisher, Eugene W. Mobile home fireplace with external air supply. 4,061,127, Cl. 126-120.000.
Fisher, Howard M., to Pennsylvania Engineering Corporation. Metallurgical vessel. 4,061,318, Cl. 266-246.000.
Fitzgerald, James J.; Fortunato, Joseph J.; and Demas, Nickolas P., to Wagner Electric Corporation. Baseless cartridge lamp and socket therefor. 4,061,940, Cl. 313-318.000.
Fixatorenbau Bertuch & Co. GmbH: *See*—
Kober, Hubert Reinhard, 4,061,298, Cl. 248-23.000.
Flanigen, Edith Marie: *See*—
Grose, Robert William; and Flanigen, Edith Marie, 4,061,724, Cl. 423-335.000.
Fleckenstein, Erwin; Heinrich, Ernst; and Mohr, Reinhard, to Cassella Farbwerke Mainkur AG. 2,4,6-Trisubstituted-3-pyridine carboxamides. 4,061,642, Cl. 260-295.50A.
Fleig, Helmut: *See*—
Adolphi, Heinrich; Fleig, Helmut; and Hagen, Helmut, 4,061,762, Cl. 424-270.000.
Flockton, Peter Robin: *See*—
Duffield, Peter Roe; Flockton, Peter Robin; Lillis, Rupert Martin; Turner, Brian Maurice; and Crowell, Donald Edward, 4,061,706, Cl. 264-90.000.
Floyd, Middleton Brawner, Jr.; Weiss, Martin Joseph; Grudzinskas, Charles Vincent; and Lai Chen, Sow-Mei, to American Cyanamid Company. 15-Deoxy-16-hydroxy-16-vinyl and cyclopropyl substituted prostanoic acids and congeners. 4,061,670, Cl. 260-514.00D.
Floyd, Middleton Brawner, Jr.; McGahren, William James; Schaub, Robert Eugene; and Weiss, Martin Joseph, to American Cyanamid Company. Derivatives of 9-hydroxy-13-trans-prostenoic acid. 4,061,672, Cl. 260-514.00D.
Fluoroware, Inc.: *See*—
Johnson, Douglas M., 4,061,228, Cl. 206-454.000.
Fondedile S.p.A.: *See*—
Chitis, Wolf, 4,060,994, Cl. 61-53.600.
Ford Motor Company: *See*—
Gondeck, Hans-Ullrich, 4,061,448, Cl. 418-170.000.
Fortunato, Joseph J.: *See*—
Fitzgerald, James J.; Fortunato, Joseph J.; and Demas, Nickolas P., 4,061,940, Cl. 313-318.000.
Foseco International Limited: *See*—
Edwards, Bryan William, 4,061,174, Cl. 164-6.000.
Foster, George B., to Airdata Inc. Approach range monitor. 4,061,297, Cl. 244-184.000.
Foster Wheeler Energy Corporation: *See*—
Gibson, Thomas, 4,061,112, Cl. 122-7.00R.
Guido, Paul Vincent; Criswell, Robert Lenox; and Zipay, Albert John, 4,060,990, Cl. 60-676.000.
Foulkes, Stanley Charles, to Chloride Group Limited. Battery plates. 4,061,843, Cl. 429-136.000.
Fr. Ernst Fehrer Gesellschaft m. b. H. & Co., K.G. Textilmaschinenfabrik und Stahlbau: *See*—
Konig, Franz, 4,060,966, Cl. 57-58.890.
Frame, Robert R.: *See*—
Morgan, Kenneth A.; and Frame, Robert R., 4,061,711, Cl. 423-67.000.
Franco, Jose Asuncion: *See*—
Axvig, Maynard Arnold; and Franco, Jose Asuncion, 4,060,868, Cl. 10-72.00R.
Franklin, William E.; Madacsi, John P.; and Rowland, Stanley P., to United States of America, Agriculture. Creasable durable press textiles from methylol reagents and half amides or half salts of dicarboxylic acids. 4,061,465, Cl. 8-185.000.
Fraser, Graham: *See*—
Gosling, Lincoln John; and Fraser, Graham, 4,060,875, Cl. 17-1.00F.
Fredriksson, Rune Osten Walter; Johansson, Johan Ingvar; and Boye, Erhard Rudolf, to Avesta Jernverks Aktiebolag. Device for performing working operations on a workpiece by detonation of blasting charges. 4,061,261, Cl. 228-2.500.
Freed, Gerald Lewis; and Lerner, David S., to Lockheed Electronics Co., Inc. Synchro-to-digital converter employing common processing apparatus. 4,062,005, Cl. 340-198.000.
Freedman, Harold H.: *See*—
Dubois, Robert A.; and Freedman, Harold H., 4,061,682, Cl. 260-611.00A.
Fregnan, Giancarlo: *See*—
Manghisi, Elso; Cascio, Giuseppe; and Fregnan, Giancarlo, 4,061,637, Cl. 260-268.0PH.
Freifeld, Stephen; and Yanick, Paul, Jr. Audio processor for use in high noise environments. 4,061,875, Cl. 179-1.00P.
Fricke, J. P.; and Muller, Ulrich R. System for reproducing sound information. 4,061,874, Cl. 179-1.00P.
Fridley, Robert B.; Chen, Pictiaw; Mehlschau, James J.; and Claypool, Lawrence L., to University of California, The Regents of the. Deformeter. 4,061,020, Cl. 73-81.000.
Friebel, Eberhard, to Siemens Aktiengesellschaft. Liquid flow meter or the like for corrosive liquids under pressure. 4,062,032, Cl. 73-273.000.
Friedman, Harvey William; and Corey, Donald Wyman, to Buxton, Incorporated. Belt and buckle assembly. 4,060,854, Cl. 2-338.000.
Frisch, Erling: *See*—
Creagan, Robert J.; and Frisch, Erling, 4,061,536, Cl. 176-78.000.
Fritz, Dieter: *See*—
Winkler, Bruno; Mangei, Bernd; and Fritz, Dieter, 4,061,786, Cl. 426-138.000.
Froeschle, Thomas A., to Bose Corporation. Loudspeaker with single layer rectangular wire voice coil wound on slit metal bobbin with a notch in the adjacent pole plate. 4,061,890, Cl. 179-115.5VC.
Frolov, Jury Fedorovich: *See*—
Paton, Boris Evgenievich; Medovar, Boris Izrailevich; Baglai, Vitaly Mikhailovich; Latash, Jury Vadimovich; Emelyanenko, July Georgievich; Stupak, Leonid Mikhailovich; Alferov, Jury Fedorovich; Bondarenko, Oleg Petrovich; Schupak, Grigory Bentsionovich; Shuruev, Lev Andreevich; Khasin, Kim Moiseevich; Frolov, Jury Fedorovich; Salmin, Valery Vasilievich; Lugovsky, Vladimir Ivanovich; Marjuschenko, Vilen Fedorovich; Shaburov, Fedor Fedorovich; Schelkunov, Jury Andreevich, deceased; and Schelkunova, Margarita Petrovna, administratrix, 4,061,180, Cl. 164-252.000.
Frye, Burton L.; Pittman, Max G.; Runge, David A.; Souza, Lawrence C.; and LaVoie, Raymond V., to United States of America, Navy. Vacuum cleaner for radioactively contaminated particles. 4,061,480, Cl. 55-356.000.
Fucker, Gregor: *See*—
Schallus, Erich; Mietens, Gerhard; Fucker, Gregor; Petrell, Jurgen; and Dorn, Friedrich Wilhelm, 4,061,719, Cl. 423-445.000.
Fuhri, William F. Carrying case for art supplies. 4,061,224, Cl. 206-1.700.
Fuji Kasui Engineering Co., Ltd.: *See*—
Senjo, Teizo; and Kobayashi, Makio, 4,061,743, Cl. 423-235.000.
Fuji Photo Film Co., Ltd.: *See*—
Fujita, Susumu, 4,062,026, Cl. 354-106.000.
Fujimoto, Sakae; Sue, Takaji; and Misawa, Toshihiko, to Ricoh Co., Ltd. Paper feeder. 4,061,328, Cl. 271-10.000.
Fujita, Susumu, to Fuji Photo Film Co., Ltd. Data recording means for use in a single lens reflex camera. 4,062,026, Cl. 354-106.000.
Fujitsu Limited: *See*—
Ito, Chiaki, 4,061,998, Cl. 340-146.3AC.
Togei, Ryoiku; Takei, Akira; and Wada, Kunihiko, 4,062,037, Cl. 357-24.000.
Fukushima, Tsugio, to Yanmar Diesel Engine Co., Ltd. Exhaust system of an internal combustion engine. 4,060,985, Cl. 60-319.000.
Fukuyama, Kiyoshi: *See*—
Yamasaki, Akitosi; Fukuyama, Kiyoshi; and Miyauchi, Kazunori, 4,061,311, Cl. 254-168.000.
Fumagalli, Carlo; Caprara, Giuseppe; and Roffia, Paolo, to Montedison S.p.A. Process for the manufacture of glycols and glycol nono-esters. 4,061,868, Cl. 560-246.000.
Funakoshi, Satoshi; Omura, Takao; and Ohshiro, Takeshi, to Green Cross Corporation, The. Haptoglobin in aqueous solution and process for preparing the same. 4,061,735, Cl. 424-177.000.
Furutsutsumi, Yasuzi. Apparatus for removing dust having device for producing air curtain. 4,060,874, Cl. 15-405.000.

Futamura, Kazumasa: *See—*
Konishi, Masami; and Futamura, Kazumasa, 4,060,982, Cl. 60-282.000.
G. Hunziker AG: *See—*
Altmann, Jack G., 4,061,374, Cl. 308-1.00R.
Gabarro, Horacio Carlos. Garment. 4,060,853, Cl. 2-108.000.
Gabbard, Ova Gene: *See—*
Walker, Andrew M.; and Gabbard, Ova Gene, 4,061,979, Cl. 325-419.000.
Gachot, Jean; and Lekarski, Simeon. Transition module for a pneumatic sequencer and an associated sequencer. 4,061,156, Cl. 137-109.000.
Gaeth, Rudolf: *See—*
Stastny, Fritz; Gaeth, Rudolf; Haardt, Udo; and Koerner, Heinz-Hermann, 4,061,701, Cl. 264-51.000.
Gagliardi, Renzo, to Snam Progetti S.p.A. Process for the synthesis of urea from carbon dioxide and ammonia. 4,061,675, Cl. 260-555.00A.
Gallivan, Timothy Joseph, to General Electric Company. Fugitive binder for nuclear fuel materials. 4,061,700, Cl. 264-0.500.
Garcia, Onofre S. Sail to row. 4,061,105, Cl. 115-3.000.
Garrett Corporation, The: *See—*
Sullivan, Richard N.; and Vance, John E., 4,061,216, Cl. 192-46.000.
Gausepohl, Hermann: *See—*
Wild, Hans; Jung, Rudolf; Echte, Adolf; Zizlsperger, Johann; and Gausepohl, Hermann, 4,061,858, Cl. 526-67.000.
Gaworowski, Andrew J.: *See—*
Duckett, John C.; Easley, Wayne W.; and Gaworowski, Andrew J., 4,061,818, Cl. 428-246.000.
Gay, Gardiner, to Avco Everett Research Laboratory, Inc. Electron beam window structure for broad area electron beam generators. 4,061,944, Cl. 313-420.000.
Gee, David William; Klassen, Horst Willi; and Rath, Heinrich Bernard, to Girling Limited. Disc brake caliper and support structure. 4,061,209, Cl. 188-73.300.
Geimer, Robert L.; and Lehmann, William F., to United States of America, Agriculture. Combination sheathing support - member building product. 4,061,813, Cl. 428-183.000.
Gell, Harold A., Jr. Orientation system. 4,060,910, Cl. 33-324.000.
Gendo, Indra Lee: *See—*
Collins, Galen R.; May, George A.; and Gendo, Indra Lee, 4,061,880, Cl. 179-15.0BA.
General Electric Company: *See—*
Bean, Charles P.; King, Roy J., Jr.; and Uzgiris, Egidijus E., 4,061,543, Cl. 195-103.50K.
Bobear, William J., 4,061,609, Cl. 260-9.000.
Crouch, Donald Wayne, 4,061,894, Cl. 200-144.00B.
Gallivan, Timothy Joseph, 4,061,700, Cl. 264-0.500.
Girard, Roland T.; and Rice, George A., 4,061,584, Cl. 252-63.000.
Griffis, Daniel L., 4,061,949, Cl. 318-154.000.
Hampton, Thomas L., 4,060,981, Cl. 60-226.00R.
Hay, Allan S., 4,061,617, Cl. 260-47.00R.
Kennedy, Richard W.; and Tefft, Edward G., 4,061,510, Cl. 148-187.000.
Rothenberg, Sidney; and Vostovich, Joseph Edward, 4,061,703, Cl. 264-36.000.
Schroeter, Siegfried H.; and Olson, Daniel R., 4,061,652, Cl. 260-308.00B.
Strok, Jack M., Jr., 4,061,939, Cl. 313-25.000.
General Foods Corporation: *See—*
Cole, Keith M., Jr., 4,061,790, Cl. 426-303.000.
General Motors Corporation: *See—*
Black, Dennis A.; and Brucken, Byron L., 4,061,443, Cl. 417-222.000.
Chupick, Ronald, 4,061,386, Cl. 293-86.000.
Coleman, John R.; and McDaniel, Dwight W., 4,061,346, Cl. 277-205.000.
Davis, Leonard C., 4,061,183, Cl. 165-8.000.
Endres, Thomas E.; and Rodeman, Donald W., 4,061,981, Cl. 325-419.000.
Jacobs, James W., 4,061,000, Cl. 68-23.700.
Mathues, Thomas P., 4,061,429, Cl. 188-206.00A.
Montgomery, James R.; and Saczawa, John S., Jr., 4,061,384, Cl. 293-71.00R.
Paddock, Gordon R., 4,060,984, Cl. 60-290.000.
Parks, Robert R., 4,061,364, Cl. 280-718.000.
Peterson, Philip R.; Taylor, David W.; and Levijoki, Wayne A., 4,061,402, Cl. 303-92.000.
Peterson, Philip R.; and Taylor, David W., 4,061,403, Cl. 303-106.000.
Sharma, Ram A.; Wright, Walter J.; and Murie, Richard A., 4,061,841, Cl. 429-112.000.
Smith, Robert, 4,061,482, Cl. 62-155.000.
Summers, Jack C., 4,061,593, Cl. 252-443.000.
General Signal Corporation: *See—*
Bradley, Robert L.; and Sullivan, Daniel J., 4,061,344, Cl. 277-26.000.
General Tire & Rubber Company, The: *See—*
Fabris, Hubert J.; Gruber, David P.; Sponseller, David R.; and Uelzmann, Heinz, 4,061,845, Cl. 526-11.100.
George, Jay R.; Line, Larry L.; and Reed, David H., to Armstrong Cork Company. Patching technique for damaged, printed design. 4,061,516, Cl. 156-94.000.
George, John. Pedal powered potter's wheel. 4,061,460, Cl. 425-459.000.
George, Peter K., to Rockwell International Corporation. One-level magnetic bubble switching device. 4,062,003, Cl. 365-16.000.
Gerasimenko, Alexandr Yakovlevich: *See—*
Lifshits, Viktor Senderovich; Petrov, Georgy Nikolaevich; Papkov, Oleg Sergeevich; Khomenko, Vladimir Ivanovich; Gerasimenko, Alexandr Yakovlevich; Taradaiko, Alexandr Korneevich; Zemchenko, Alexandr Mikhailovich; and Gremyakov, Ivan Petrovich, 4,061,078, Cl. 90-24.00C.
Gerber, Mark S.: *See—*
Miller, Don W.; and Gerber, Mark S., 4,061,919, Cl. 250-363.00S.
Gere, Sandor. Stressless suspension and anchoring process of stone veneer. 4,060,951, Cl. 52-508.000.
Germanas, Dalia: *See—*
Ryu, Ji-Yong; and Germanas, Dalia, 4,061,689, Cl. 260-671.00R.
Geurts, Petrus T. J.; and Wittenberg, Albert J., to Oce-van der Grinten N.V. Light reflecting casing. 4,061,422, Cl. 350-293.000.
Gewerkschaft Eisenhutte Westfalia: *See—*
Heitkamp, Herbert; and Husemann, Heinz, 4,060,992, Cl. 61-41.00A.
Ghent, Roy B. Spring manipulating device. 4,061,308, Cl. 254-10.500.
Giannarelli, Giancarlo; and Movilli, Walter, to Montedison S.p.A. Apparatus for extruding thermoplastic material. 4,061,462, Cl. 425-464.000.
Gibson, Thomas, to Foster Wheeler Energy Corporation. Steam generating plant. 4,061,112, Cl. 122-7.00R.
Gillern, Maurice F., to Weyerhaeuser Company. Phenol-formaldehyde-resorcinol resins and adhesives. 4,061,620, Cl. 260-29.300.
Gillhaus, Horst, to BBC Brown, Boveri & Company Limited. Apparatus for pouring casting material. 4,061,179, Cl. 164-151.000.
Gillitzer, Max; and Tajbl, Franz, to Messer Griesheim GmbH. Arrangement for stabilization and ignition of welding arcs by ignition pulses. 4,061,899, Cl. 219-131.00R.
Gilson, John L.: *See—*
Moschovis, Elias P.; and Gilson, John L., 4,061,582, Cl. 252-62.10L.
Gilwee, William J., Jr.; and Parker, John A., to United States of America, National Aeronautics and Space Administration. Honeycomb-laminate composite structure. 4,061,812, Cl. 428-117.000.
Girard, Roland T.; and Rice, George A., to General Electric Company. High dielectric constant ink for thick film capacitors. 4,061,584, Cl. 252-63.000.
Girling Limited: *See—*
Gee, David William; Klassen, Horst Willi; and Rath, Heinrich Bernard, 4,061,209, Cl. 188-73.300.
Gladwin, Floyd R. Apparatus for forming large compound curved surfaces. 4,061,077, Cl. 90-15.00A.
Glander, Siegfried: *See—*
von der Eltz, Hans-Ulrich; Feess, Erich; and Glander, Siegfried, 4,061,001, Cl. 68-200.000.
Glazer, Joseph, to Morse Safety Products Co. Grinder for glass plates or the like. 4,060,937, Cl. 51-80.00A.
Gleason Works, The: *See—*
Ryan, Arthur B.; and Thomas, Charles B., 4,060,881, Cl. 407-22.000.
Glowaky, Raymond Charles; Rudolph, Stephen Edward; and Bierwagen, Gordon Paul, to Sherwin-Williams Company, The. Coating compositions containing starch half-esters and process for preparing same. 4,061,610, Cl. 260-17.4ST.
Glowaky, Raymond Charles; Rudolph, Stephen Edward; and Bierwagen, Gordon Paul, to Sherwin-Williams Company, The. Aqueous compositions containing starch ester dispersants. 4,061,611, Cl. 260-17.4ST.
Gluecksmann, Alfred: *See—*
Marans, Nelson Samuel; and Gluecksmann, Alfred, 4,061,662, Cl. 560-26.000.
Gobillon, Yves: *See—*
Weidenbach, Guenter; Lecloux, Andre; and Gobillon, Yves, 4,061,713, Cl. 423-213.500.
Goble, Ralph W., to Meinerz, Bernard J., a part interest. Method for filling a container with a liquid saturated with a gas and sealing while avoiding frothing of the liquid. 4,060,956, Cl. 53-22.00R.
Goddard, Donald Lawrence: *See—*
Nolan, John Howard; Goddard, Donald Lawrence; and Short, Barrett John, 4,061,535, Cl. 176-38.000.
Goel, Rajeshwar P.; Vota, Terry L.; and Lynch, Thomas J., to Westinghouse Electric Corporation. Method and apparatus for fabricating vent plate having bow-tie slot arrangement. 4,061,937, Cl. 310-65.000.
Goldberg, Burton D. Novelty coin flipping device. 4,061,338, Cl. 273-138.00R.
Goldman, Abraham; and Datta, Pabitra, to RCA Corporation. Method for making etch-resistant stencil with dichromate-sensitized casein coating. 4,061,529, Cl. 156-644.000.
Goldstein, Marvin Sherwood; Lindsley, John Francis; Allison, William Woodrow; and Price, Charles Dan, to American Cyanamid Company. NO_x control in catalyst manufacture. 4,061,597, Cl. 252-465.000.
Golod, Leonid Davydovich: *See—*
Andoniev, Sergei Mikhailovich; Granovsky, Boris Ruvimovich; Golod, Leonid Davydovich; Kudinov, Gennady Alexandrovich; Kasyanov, Grigory Ivanovich; Filipiev, Oleg Vladimirovich; Tseluiko, Jury Ivanovich; and Lysenko, Evgeny Eliseevich, 4,061,317, Cl. 266-193.000.
Gondeck, Hans-Ullrich, to Ford Motor Company. Drive for the ignition distributor of an internal combustion engine. 4,061,448, Cl. 418-170.000.
Gonzalez, Eduardo E. Solar energy device. 4,061,130, Cl. 126-271.000.
Goodfriend, Harvey J.; Mercik, Henry J., Jr.; and Armstrong, Lee R., to United Technologies Corporation. Full throttle, specific speed

tests in internal combustion engine diagnostics. 4,061,026, Cl. 73-116.000.
Goodman, Lawrence R.: *See—*
Marks, Ronald H.; Marks, Paul D.; and Goodman, Lawrence R., 4,060,999, Cl. 66-125.00A.
Goodrich, David E. Multiple code electronic combination door lock. 4,062,056, Cl. 361-172.000.
Goralski, Christian T., to Dow Chemical Company, The. Quinolinesulfonyl compounds. 4,061,639, Cl. 260-283.00S.
Goranson, Rex W.; and Wick, Raymond V. Bolometer. 4,061,917, Cl. 250-338.000.
Gorvin, John Henry, to Burroughs Wellcome Co. Certain cyclic carbonyl compounds used in the prophylaxis of allergic conditions. 4,061,768, Cl. 424-283.000.
Goslin, John Keith; and Tomlinson, Thomas Clifford, to Imperial Group Limited. Perforating apparatus for articles. 4,061,148, Cl. 131-23.00R.
Gosling, Lincoln John; and Fraser, Graham, to Union Carbide Canada Limited. Apparatus for cutting stuffed sausage casing. 4,060,875, Cl. 17-1.00F.
Goss, John B.; Morrow, William D.; and Corbett, Jack William, to Pedestal Crane Corporation. Crane crosshead assembly mounted on a pedestal. 4,061,230, Cl. 212-70.000.
Gottlieb, Sheldon K. Compositions containing collagen and methods of use for repairing depressed cutaneous scars. 4,061,731, Cl. 424-101.000.
Gottstein, William J.: *See—*
Kaplan, Murray A.; Gottstein, William J.; and Granatek, Alphonse P., 4,061,862, Cl. 544-27.000.
Gould, Jack, to Imperial Chemical Industries Limited. Fibres. 4,061,827, Cl. 428-368.000.
Gouret, Claude J.: *See—*
Fauran, Claude P.; Eberle, Jeannine A.; Bourgery, Guy R.; Raynaud, Guy R.; and Gouret, Claude J., 4,061,855, Cl. 544-122.000.
Goyvaerts, Edward C., to N. V. Joseph Mertens International. Extensible table. 4,061,091, Cl. 108-84.000.
Grabmaier, Josef: *See—*
Aulich, Hubert; and Grabmaier, Josef, 4,061,484, Cl. 65-2.000.
Graham, Clifford Arthur Andrew; and Linehan, Kevin Lawrence, to ICI Australia Limited. Therapeutic composition in substantially rigid block form for use in controlling or preventing bloat in animals. 4,061,728, Cl. 424-14.000.
Graham, Duane W.: *See—*
Cunningham, William L.; and Graham, Duane W., 4,061,238, Cl. 214-750.000.
Graham Magnetics Incorporated: *See—*
Deffeyes, Robert J.; and Tyler, Wesley R., 4,061,824, Cl. 428-328.000.
Granatek, Alphonse P.: *See—*
Kaplan, Murray A.; Gottstein, William J.; and Granatek, Alphonse P., 4,061,862, Cl. 544-27.000.
Grand, Michel: *See—*
Bernard, Jean-Rene; Bousquet, Jacques; and Grand, Michel, 4,061,690, Cl. 260-676.00R.
Grandchamp, Pierre-Andre: *See—*
Burckhardt, Christoph Benedikt; Grandchamp, Pierre-Andre; and Hoffmann, Heinz, 4,061,018, Cl. 73-629.000.
Grandis, Ugolino. Device for pedal operating a motor vehicle transmission control. 4,061,051, Cl. 74-474.000.
Granovsky, Boris Ruvimovich: *See—*
Andoniev, Sergei Mikhailovich; Granovsky, Boris Ruvimovich; Golod, Leonid Davydovich; Kudinov, Gennady Alexandrovich; Kasyanov. Grigory Ivanovich; Filipiev, Oleg Vladimirovich; Tseluiko, Jury Ivanovich; and Lysenko, Evgeny Eliseevich, 4,061,317, Cl. 266-193.000.
Grant, Norman H.: *See—*
Alburn, Harvey E.; Lien, Eric L.; and Grant, Norman H., 4,061,737, Cl. 424-177.000.
Granzer, Ernold: *See—*
Teufel, Hermann; Bartmann, Wilhelm; Granzer, Ernold; and Musil, Josef, 4,061,772, Cl. 424-304.000.
Gray, Gary A.: *See—*
Batchelor, Phillip J.; Traister, Robert L.; Gray, Gary A.; and Marino, Joseph A., 4,062,061, Cl. 364-900.000.
Gray, Gorman D., to Lifetime Carbide Company. Method for attaching cutting tips to cutting tools. 4,061,057, Cl. 76-112.000.
Grebe, Wolfgang; and Buhlmann, Siegfried. Computer for numeric calculation of a plurality of functionally interrelated data units. 4,061,906, Cl. 364-735.000.
Green Cross Corporation, The: *See—*
Funakoshi, Satoshi; Omura, Takao; and Ohshiro, Takeshi, 4,061,735, Cl. 424-177.000.
Green, Derek, deceased; and by Green, Muriel Irene, executrix, to United Kingdom Atomic Energy Authority. Extrusion. 4,061,011, Cl. 72-262.000.
Green, Harold A.: *See—*
Lada, Arnold; Petrocci, Alfonso N.; Green, Harold A.; and Merianos, John J., 4,061,750, Cl. 424-249.000.
Green, James Edmond. Method and apparatus for dual resolution analysis of a scene. 4,061,914, Cl. 250-201.000.
Green, John W., to Westinghouse Electric Corporation. Load tap changer system. 4,061,963, Cl. 323-43.50R.
Green, Muriel Irene, executrix: *See—*
Green, Derek, deceased; and Green, Muriel Irene, executrix, 4,061,011, Cl. 72-262.000.
Greenberg, Charles B., to PPG Industries, Inc. Selective solar energy receiver and method for its production. 4,061,830, Cl. 428-469.000.
Greenstein, Jean. Device for forming dental restorations. 4,060,897, Cl. 32-40.00R.
Greenwood, Michael Peter. Angle measuring device. 4,060,900, Cl. 33-75.00R.
Greer, Edward M., to EMG Hydraulics, Inc. Anti-extrusion grommet assembly for pressure accumulator liquid valve. 4,061,161, Cl. 138-30.000.
Gremyakov, Ivan Petrovich: *See—*
Lifshits, Viktor Senderovich; Petrov, Georgy Nikolaevich; Papkov, Oleg Sergeevich; Khomenko, Vladimir Ivanovich; Gerasimenko, Alexandr Yakovlevich; Taradaiko, Alexandr Korneevich; Zemchenko, Alexandr Mikhailovich; and Gremyakov, Ivan Petrovich, 4,061,078, Cl. 90-24.00C.
Gresch, Heinz: *See—*
Holter, Heinz; Gresch, Heinz; and Igelbuscher, Heinrich, 4,061,476, Cl. 55-77.000.
Greuter, Hans; and Bellus, Daniel, to Ciba-Geigy Corporation. Process for the production of 2-amino-3-hydroxypyridines. 4,061,644, Cl. 260-296.00R.
Grier, Nathaniel: *See—*
Dybas, Richard A.; Grier, Nathaniel; and Witzel, Bruce E., 4,061,775, Cl. 424-330.000.
Griffis, Daniel L., to General Electric Company. Earth excavator including apparatus for stabilizing performance by compensating for changes in temperature. 4,061,949, Cl. 318-154.000.
Grimsrud, Lars. Combination of flow meter and bubble trap. 4,061,031, Cl. 73-200.000.
Grisar, J. Martin: *See—*
Blohm, Thomas R.; Grisar, J. Martin; and Wiech, Norbert L., 4,061,746, Cl. 424-244.000.
Griverus, Tor Lennart Bernt. Method and device for correcting the output signal from a digital transducer for measuring a physical magnitude or variable. 4,061,030, Cl. 73-194.00E.
Groff, Gaylord L.: *See—*
Petras, Raymond J.; and Groff, Gaylord L., 4,061,826, Cl. 428-356.000.
Groner, Norman Arlo, to Victor United, Inc. Compound bow with cable tensioning assembly. 4,061,124, Cl. 124-23.00R.
Grose, Robert William; and Flanigen, Edith Marie, to Union Carbide Corporation. Crystalline silica. 4,061,724, Cl. 423-335.000.
Gross-Given Manufacturing Company: *See—*
Lotspeich, Joseph A., 4,061,245, Cl. 221-75.000.
Gross, James R.; and McFadden, Russell T., to Dow Chemical Company, The. Flexible water swellable crosslinked polyacrylate film. 4,061,846, Cl. 526-16.000.
Groupement pour les Activites Atomiques et Avancees "GAAA" S.A.: *See—*
Carbonnel, Henri, 4,061,176, Cl. 164-61.000.
Groves, John L. Cant strip machine. 4,061,070, Cl. 83-404.400.
Gruber, David P.: *See—*
Fabris, Hubert J.; Gruber, David P.; Sponseller, David R.; and Uelzmann, Heinz, 4,061,845, Cl. 526-11.100.
Grudzinskas, Charles Vincent: *See—*
Floyd, Middleton Brawner, Jr.; Weiss, Martin Joseph; Grudzinskas, Charles Vincent; and Lai Chen, Sow-Mei, 4,061,670, Cl. 260-514.00D.
Grumman Allied Industries Inc.: *See—*
Burg, Stanley P., 4,061,483, Cl. 62-268.000.
Grunbaum, Benjamin W.: *See—*
United States of America, National Aeronautics and Space Administration; and Grunbaum, Benjamin W., 4,061,561, Cl. 204-299.00R.
GTE Laboratories Incorporated: *See—*
Kadkade, Prakash G., 4,060,933, Cl. 47-58.000.
GTE Sylvania Incorporated: *See—*
Benda, David; and Davis, Charles A., 4,061,945, Cl. 313-481.000.
Decker, John J.; and Ricards, Charles R., 4,061,163, Cl. 141-7.000.
DiDominico, Mario A.; and Smithgall, Harry E., 4,061,943, Cl. 313-482.000.
Hallett, Joseph L.; and Say, Donald L., 4,061,941, Cl. 313-414.000.
Schreurs, Willy P., 4,061,946, Cl. 313-488.000.
Guerrieri, Salvatore A. Process for conversion of alkaline earth sulfites and bisulfites into oxides and carbonates. 4,061,715, Cl. 423-242.000.
Guido, Paul Vincent; Criswell, Robert Lenox; and Zipay, Albert John, to Foster Wheeler Energy Corporation. Power generation system. 4,060,990, Cl. 60-676.000.
Gulf Research & Development Company: *See—*
Hughes, Richard H.; Jamieson, Donald R.; and Kochhar, Rajindar K., 4,061,847, Cl. 526-49.000.
McKinney, Joel Drexler; Sebulsky, Raynor T.; and Wynne, Francis Edmund, Jr., 4,061,562, Cl. 208-61.000.
Gulf & Western Industries, Inc.: *See—*
Battle, Francis L., 4,061,902, Cl. 364-436.000.
Battle, Francis L., 4,061,903, Cl. 364-436.000.
Gulla, Michael, to Shipley Company Inc. Catalyst composition and method of preparation. 4,061,588, Cl. 252-429.00R.
Gumb, Beverley William; Kuhfus, Gerd; and Cogan, Fredrick Thomas, to Northern Telecom Limited. Multi-outlet adaptor for plug-in telephones. 4,061,411, Cl. 339-159.00R.
Gundlach, Theodore F.; and Hawthorne, Arthur L., to J.M.J. Industries, Inc. Striking plate for disintegrating mill. 4,061,281, Cl. 241-188.00R.
Gunjikar, Narayan Vishwanath. Veterinary compositions for inducing estrus in animals and method. 4,061,733, Cl. 424-143.000.

Gupta, Alankar; and Fadden, Delmar M., to Boeing Company, The. Status monitoring apparatus for BLC systems. 4,061,996, Cl. 340-27.00R.
Gutbrod, Dieter: *See—*
Lahm, Heinrich; and Gutbrod, Dieter, 4,061,061, Cl. 82-2.500.
Guth, Wolfgang: *See—*
Vaeth, Guenter; Ohlinger, Manfred; Stritzinger, Heinz; Schoenafinger, Eduard; Wettstein, Eugen; and Guth, Wolfgang, 4,061,727, Cl. 423-634.000.
Guthrie, James Leverette; and Dighe, Shrikant Vishwanath, to W. R. Grace & Co. Thiol containing compounds and their preparation. 4,061,864, Cl. 560-26.000.
H. H. Robertson Company: *See—*
Self, James M., 4,061,613, Cl. 260-40.00R.
Self, James M., 4,061,614, Cl. 260-40.00R.
Haardt, Udo: *See—*
Stastny, Fritz; Gaeth, Rudolf; Haardt, Udo; and Koerner, Heinz-Hermann, 4,061,701, Cl. 264-51.000.
Haberman, Jack I.: *See—*
Colbert, Richard P.; Dimitriou, George; Jones, Max E.; and Haberman, Jack I., 4,062,012, Cl. 343-7.00A.
Habich, Adolph Broadus, to International Business Machines Corporation. Document receiving apparatus. 4,061,331, Cl. 271-223.000.
Hadek, Vaclav; Somoano, Robert B.; and Rembaum, Alan, to United States of America, National Aeronautics and Space Administration. Durable antistatic coating for polymethylmethacrylate. 4,061,834, Cl. 428-522.000.
Hagen, Helmut: *See—*
Adolphi, Heinrich; Fleig, Helmut; and Hagen, Helmut, 4,061,762, Cl. 424-270.000.
Hager, Bror Olof. Preservative for wood and other fibrous materials. 4,061,500, Cl. 106-15.00R.
Hahn, Frederick C.; and Jones, Larren F., to Esco Corporation. Releasable lock for excavating tooth. 4,061,432, Cl. 403-318.000.
Hahnke, Manfred; Hohmann, Kurt; and Papenfuhs, Theodor, to Hoechst Aktiengesellschaft. Process for the preparation of dyestuff compositions. 4,061,464, Cl. 8-79.000.
Hajek, Jiri: *See—*
Sedlacek, Pavel; and Hajek, Jiri, 4,061,966, Cl. 324-207.000.
Hajos, Zoltan George, to Hoffmann-La Roche Inc. Stereospecific total steroidal synthesis via substituted C/D-trans indanones. 4,061,679, Cl. 260-586.00F.
Hakki, Moustafa I.: *See—*
Costales, Manuel; and Hakki, Moustafa I., 4,060,969, Cl. 57-102.000.
Halbach, Gunter: *See—*
Madaus, Rolf Hermann Heinrich; Halbach, Gunter; and Trost, Wilfried, 4,061,765, Cl. 424-278.000.
Hall, Charles M.; and Wright, John B., to Upjohn Company, The. Anti-allergic oxanilate compounds. 4,061,791, Cl. 424-304.000.
Hall, Gunnar, to A/S Apothekernes Laboratorium for Specialpraeparater. Method for recovering and stabilizing fat and fatty substances as well as proteins and proteinous substances from process water. 4,061,568, Cl. 210-44.000.
Hall, James R., to Hughes Tool Company. Support system for rotatable detecting element. 4,061,967, Cl. 324-260.000.
Hall, John B.; and Weigers, Wilhelmus Johannen, to International Flavors & Fragrances Inc. Cyclohexane diol composition. 4,061,686, Cl. 260-631.00R.
Hall, Joseph H.: *See—*
Elsaesser, Fred L.; and Hall, Joseph H., 4,060,979, Cl. 60-39.030.
Elsaesser, Fred L.; and Hall, Joseph H., 4,060,980, Cl. 60-39.030.
Hallett, Joseph L.; and Say, Donald L., to GTE Sylvania Incorporated. CRT electron gun assembly. 4,061,941, Cl. 313-414.000.
Hamada, Motoharu; and Harada, Shunichi, to Kawasaki Steel Corporation. Method of producing aluminum or aluminum alloy coated steel sheets with aid of powder method. 4,061,801, Cl. 427-192.000.
Hamid, Michael A.; and Rowlandson, Lyall G., to Minister of Defense, Canadian Government. Seeded flame microwave power load. 4,061,991, Cl. 333-22.00R.
Hamilton, Earle B. Extractor for removing damaged barrel lock from locking ring of a kilowatt-hour meter. 4,060,884, Cl. 29-256.000.
Hammer, Heiner I., to Schlegel Engineering GmbH. Process for the continuous overlap welding of plastic sheets or panels. 4,061,519, Cl. 156-244.000.
Hampl, Edward F., Jr., to Minnesota Mining and Manufacturing Company. Rare-earth-metal-based thermoelectric compositions. 4,061,505, Cl. 136-238.000.
Hampton, Harvie G. Chain saw safety bar. 4,060,894, Cl. 30-382.000.
Hampton, Thomas L., to General Electric Company. Diverter valve for coannular flows. 4,060,981, Cl. 60-226.000.
Hamsher, James J., to Caterpillar Tractor Co. Acrylate ester derivatives. 4,061,867, Cl. 560-219.000.
Hanamoto, Yukimitsu: *See—*
Kawanami, Shunpei; and Hanamoto, Yukimitsu, 4,061,005, Cl. 72-30.000.
Hanemann, Horst J.: *See—*
Warshaw, Saul; Loveland, Winton; Hanemann, Horst J.; and Ramaglia, Michael, 4,061,526, Cl. 156-468.000.
Hankins, Norman K.: *See—*
DeMonsy, Richard L.; and Hankins, Norman K., 4,061,872, Cl. 174-138.00F.
Hanma, Kentaro; and Miyazaki, Gentaro, to Hitachi, Ltd. Color television receiver employing elastic surface wave filter. 4,062,044, Cl. 358-21.000.
Hannan, Harry, Jr.; and Hannan, Primrose D. Noncarbonated, caffeine-containing fruit and cola flavored beverage. 4,061,797, Cl. 426-590.000.
Hannan, Primrose D.: *See—*
Hannan, Harry, Jr.; and Hannan, Primrose D., 4,061,797, Cl. 426-590.000.
Hannauer, George; and Asthana, Abhaya, to Electronic Associates, Inc. Variable analog function generator. 4,061,904, Cl. 364-608.000.
Hannes Marker: *See—*
Korger, Heinz, 4,061,355, Cl. 280-605.000.
Hannie, David Eugene; and Ducharme, Gerald Louis, to Eastman Kodak Company. Combination of two timing layers for photographic products. 4,061,496, Cl. 96-29.00D.
Hannig, Kurt; and Wirth, Hanns, to Max-Planck-Gesellschaft zur Forderung der Wissenschaften e.V. Apparatus for deflection electrophoresis. 4,061,560, Cl. 204-299.00R.
Hannon, David Malcolm; and Hu, Hung Liang, to International Business Machines Corporation. Device for biasing bubble domains. 4,062,002, Cl. 365-27.000.
Hansen, Karl A.; and Hendrickson, I. Glen, to Boeing Company, The. Electromagnetic dent remover with electromagnetic localized work coil. 4,061,007, Cl. 72-56.000.
Hansen, Robert D.: *See—*
Pelletier, Ronald R.; Hansen, Robert D.; and Vanderbush, James J., 4,061,833, Cl. 428-511.000.
Hanser, Paul Edmond, to HWH Corporation. Vehicle leveling system and device therefor. 4,061,309, Cl. 254-86.00H.
Hanson, Charles M., to United States of America, Army. Vuilleumier cycle thermal compressor air conditioner system. 4,060,996, Cl. 62-6.000.
Hanssen, Albert J., to International Telephone and Telegraph Corporation. Reciprocating valve having stem cleaning means. 4,061,157, Cl. 137-242.000.
Harada, Shunichi: *See—*
Hamada, Motoharu; and Harada, Shunichi, 4,061,801, Cl. 427-192.000.
Harper, George S.; and Merriken, Lyal N., to Airpax Electronics, Inc. Circuit breaker with improved delay. 4,062,052, Cl. 361-28.000.
Harrill, Thomas D. Extension cord reel and case. 4,061,290, Cl. 242-96.000.
Harris, Arthur M. Metered valve assembly for dispensing devices. 4,061,251, Cl. 222-402.200.
Harrison, Ronnie M.: *See—*
Tallent, Michael W.; Scaggs, Lee E.; Swain, Allan L.; Harrison, Ronnie M.; and Hendershot, William B., III, 4,062,041, Cl. 358-8.000.
Hartwick, George J. Self-cleaning smoke filter. 4,061,478, Cl. 55-257.0PV.
Harwood, William James; and Snyder, Robert P., to Harwood, William James. Portable tool. 4,061,165, Cl. 144-1.00R.
Hase, Siegfried: *See—*
Baumgartel, Karl Heinz; Altenburg, Dieter; and Hase, Siegfried, 4,061,332, Cl. 271-270.000.
Hasegawa, Katsuji, to Meinan Machinery Works, Inc. Apparatus for cutting off a thickness of wood or veneer from logs. 4,061,169, Cl. 144-213.000.
Hashimoto, Kiyoshi; and Kitamura, Shigeki, to Matsushita Electric Industrial Co., Ltd. Device for generating electrical pulses in response to shaft rotation. 4,061,938, Cl. 310-168.000.
Hashino, Yasuo: *See—*
Hayano, Fusakazu; Hashino, Yasuo; and Ichikawa, Kiyoshi, 4,061,821, Cl. 428-304.000.
Hasselblad, Fritz Victor: *See—*
Hyden, Viktor Holger; and Hasselblad, Fritz Victor, 4,061,141, Cl. 128-214.00R.
Hastings, Stephen G.; Poschel, Bruno P. H.; and Butler, Donald E., to Parke, Davis & Company. Methods for treating cardiovascular disorders. 4,061,756, Cl. 424-263.000.
Hattori, Tatsuo: *See—*
Katsuragawa, Kanzi; Hattori, Tatsuo; Kihara, Keiichi; and Tamabayashi, Hanzo, 4,061,669, Cl. 260-505.00N.
Hatuse, Toshikazu: *See—*
Natori, Minoru; Hatuse, Toshikazu; Kawanobe, Kouhei; Ogawa, Hiroshi; Sekiya, Fukuo; Ebihara, Heihachiro; and Uchino, Misao, 4,060,974, Cl. 58-23.00R.
Hauber, Peter Fritz, to Reflectolite Products Inc. Window latch. 4,061,370, Cl. 292-175.000.
Haun, Gladys M.: *See—*
Haun, William A.; and Haun, Gladys M., 4,060,927, Cl. 43-43.100.
Haun, William A.; and Haun, Gladys M. Fish weight blind binding. 4,060,927, Cl. 43-43.100.
Hauni-Werke Korber & Co., KG: *See—*
Bantien, Jurgen; Bardenhagen, Dietrich; Mielke, Johannes; and Kruse, Friedel, 4,061,234, Cl. 214-6.00M.
Havera, Herbert John; and Strycker, Wallace Glenn, to Miles Laboratories, Inc. Method for using 3-substituted-5-phenyl-5-pyridyl hydantoins as antiarrhythmic agents. 4,061,760, Cl. 424-267.000.
Havranek, Peter Harry: *See—*
Ivarsson, Paul Lennart; and Havranek, Peter Harry, 4,061,501, Cl. 106-44.000.
Hawkins, Kenneth Robert: *See—*
White, William Page; and Hawkins, Kenneth Robert, 4,060,942, Cl. 51-268.000.
Hawkins, St. Elmo. Aircraft wheel rotator. 4,061,294, Cl. 244-103.00S.
Hawthorne, Arthur L.: *See—*
Gundlach, Theodore F.; and Hawthorne, Arthur L., 4,061,281, Cl. 241-188.00R.

Hay, Allan S., to General Electric Company. Oxidation-reduction diphenoquinone-diphenohydroquinone polymers. 4,061,617, Cl. 260-47.00R.
Hayano, Fusakazu; Hashino, Yasuo; and Ichikawa, Kiyoshi, to Asahi Kasei Kogyo Kabushiki Kaisha. Semipermeable composite membranes. 4,061,821, Cl. 428-304.000.
Hayashi, Hisao: *See—*
Matsushita, Takeshi; Hayashi, Hisao; and Shibasaki, Mitsuru, 4,062,034, Cl. 357-16.000.
Hayashi, Hitoshi: *See—*
Okamoto, Kiyokazu; and Hayashi, Hitoshi, 4,061,907, Cl. 364-718.000.
Hayashi, Masaki; Tanouchi, Tadao; Ito, Hiroyuki; and Ohyama, Isao, to Ono Pharmaceutical Company. Prostaglandin analogues. 4,061,865, Cl. 560-121.000.
Hayashi, Setsuo: *See—*
Kotezawa, Katsutaka; Onodera, Toshimi; Hayashi, Setsuo; and Shimanuki, Fujio, 4,062,016, Cl. 343-178.000.
Haylock, John Christopher: *See—*
Lofquist, Robert Alden; and Haylock, John Christopher, 4,061,621, Cl. 260-78.00L.
Haynes, Leonard S., to United States of America, Navy. Next address subprocessor. 4,062,058, Cl. 364-200.000.
Hazelrigg, Mark Jonathan, Jr.; and Caldwell, Donald Lee, to Dow Chemical Company, The. Electrolytic cell anode structures containing cobalt spinels. 4,061,549, Cl. 204-98.000.
Heckethorn Manufacturing Co.: *See—*
Callon, Floyd Raymond, 4,061,090, Cl. 108-51.100.
Heil, Walter: *See—*
Sommerkamp, Peter; and Heil, Walter, 4,061,871, Cl. 13-31.000.
Heinemann, William H., Jr.: *See—*
Cary, John W.; and Heinemann, William H., Jr., 4,061,094, Cl. 111-89.000.
Heinrich, Ernst: *See—*
Fleckenstein, Erwin; Heinrich, Ernst; and Mohr, Reinhard, 4,061,642, Cl. 260-295.50A.
Heinsohn, Howard H., Jr.: *See—*
Evers, William J.; Heinsohn, Howard H., Jr.; and Vock, Manfred Hugo, 4,061,795, Cl. 426-535.000.
Evers, William J.; Heinsohn, Howard H., Jr.; and Vock, Manfred Hugo, 4,061,796, Cl. 426-535.000.
Heitkamp, Herbert; and Husemann, Heinz, to Gewerkschaft Eisenhutte Westfalia. Method of and apparatus for laying a pipe-line. 4,060,992, Cl. 61-41.00A.
Heizmann, Frieder, to Robert Bosch G.m.b.H. Centering apparatus for sensing alignment of engaging, aligned machine elements, typically screws and bolts with nuts. 4,060,906, Cl. 33-181.00R.
Helfert, Herbert; Langdon, William Keith; and Davis, Pauls, to BASF Wyandotte Corporation. Highly branched polyether polyols of high molecular weight. 4,061,684, Cl. 260-615.00B.
Helm, Edward J.: *See—*
van Ackeren, Joseph; and Helm, Edward J., 4,061,544, Cl. 202-141.000.
Hendershot, William B., III: *See—*
Tallent, Michael W.; Scaggs, Lee E.; Swain, Allan L.; Harrison, Ronnie M.; and Hendershot, William B., III, 4,062,041, Cl. 358-8.000.
Hendrickson, I. Glen: *See—*
Hansen, Karl A.; and Hendrickson, I. Glen, 4,061,007, Cl. 72-56.000.
Hengen, Edward John; and Love, Mahlon Lloyd, to Deere & Company. Self-propelled crop harvester. 4,060,960, Cl. 56-14.600.
Henkel U. Cie: *See—*
Schwarze, Werner; Merk, Wolfgang; and Binder, Volker, 4,061,869, Cl. 526-1.000.
Hennemann, Jean, to Unelec S.A. Tripping device for pre-selection of function for electrical equipment. 4,061,993, Cl. 335-20.000.
Herfeld, Friedrich Walter. Continuous mixing apparatus, especially cooling mixer and a method for producing granulated material. 4,061,275, Cl. 241-46.040.
Hernandez, Gerardo Lopez. Brick. 4,060,952, Cl. 52-593.000.
Herrmann, Manfred Franz: *See—*
Satzinger, Gerhard; and Herrmann, Manfred Franz, 4,061,635, Cl. 544-172.000.
Herrnring, Heinz Gunther, to Montblanc-Simplo GmbH. Socket structure for the ball of a ball point pen refill. 4,061,430, Cl. 401-216.000.
Herron, David K., to Eli Lilly and Company. 7-Substituted-ureido-3-carbamoyloxymethyl cephalosporin antibiotics. 4,061,630, Cl. 544-16.000.
Hershey Foods Corporation: *See—*
Mann, Elton W., 4,061,488, Cl. 71-77.000.
Herz, Alvin E., to L. B. Foster Company. Resilient yoke mountings for vibratory pile drivers and extractors. 4,061,196, Cl. 173-49.000.
Hessenthaler, Herbert C., to Thermoplastice Processes Inc. Compound extrusion die for producing an internally lined extrudate. 4,061,461, Cl. 425-462.000.
Hesston Corporation: *See—*
Anderson, John Dale; Buller, Richard James; and Trego, Allen Thomas, 4,060,961, Cl. 56-294.000.
McCanse, James Edson, 4,061,194, Cl. 172-447.000.
Hetrich, Wayne L., to Corporation for Public Broadcasting. Audio signal monitoring system with display of two signal characteristics. 4,061,042, Cl. 73-647.000.
Heubach, Gunther: *See—*
Ertel, Hartmut; Heubach, Gunther; and Wolf, Erhard, 4,061,767, Cl. 424-282.000.
Hewlett-Packard Co.: *See—*
Walker, William T., 4,061,958, Cl. 363-81.000.
Hexcel Corporation: *See—*
DeMonsy, Richard L.; and Hankins, Norman K., 4,061,872, Cl. 174-138.00F.
Higashinaka, Koichi; and Kai, Tetsuo, to Hitachi Metals, Ltd. Dust controlling loading chute apparatus for particulate material. 4,061,221, Cl. 198-524.000.
Higashitsuji, Ken: *See—*
Nishizawa, Kazuo; Higashitsuji, Ken; and Mori, Yuji, 4,061,557, Cl. 204-277.000.
Higgins, Thomas Engel, to Union Carbide Corporation. Collagen compositions having crosslinking agent incorporated therein and the method of preparing the same. 4,061,787, Cl. 426-140.000.
Hilfman, Lee, to UOP Inc. Hydrocracking of hydrocarbons. 4,061,563, Cl. 208-111.000.
Hilgert, Charles William; and Lobmeyer, Raymond Joseph, to Deere & Company. Inline oil filter assembly. 4,061,576, Cl. 210-437.000.
Hill, George B., to Newspaper Equipment Company. Plate locking structure for press cylinders. 4,061,087, Cl. 101-415.100.
Hillard, Ray Leonard; and Weston, Norma Ann, to American Cyanamid Company. Method for the preparation of mono- or poly [dialkyl or dicycloalkylphosphonylmethyl] aromatic carbocyclic compounds. 4,061,681, Cl. 260-606.50P.
Hille, Arvin A., to Omark Industries, Inc. Non-symmetrical bar with reversible body portion. 4,060,895, Cl. 30-384.000.
Hils, Karl: *See—*
Reis, August; Fend, Fritz; and Hils, Karl, 4,061,556, Cl. 204-271.000.
Himmelmann, Wolfgang, to AGFA-Gevaert Aktiengesellschaft. Process for hardening silver halide photographic layers with organic asymmetric monocarbodiimides. 4,061,499, Cl. 96-111.000.
Hinde, Walter R.: *See—*
Keene, Derek K.; and Hinde, Walter R., 4,061,053, Cl. 74-512.000.
Hirano, Sensaburo: *See—*
Tanaka, Sadaharu; Saito, Sadayuki; and Hirano, Sensaburo, 4,061,319, Cl. 266-281.000.
Hirsch, Allen Frederick, to Ortho Pharmaceutical Corporation. Process for preparation of aliphatic primary sulfamates. 4,061,663, Cl. 260-456.00A.
Hirtle, Michael O'Hara; and Morse, James Edward, to Mattel, Inc. Toy airplane launcher. 4,060,930, Cl. 46-81.000.
Hiss, William K. Measuring assembly for turbine thrust bearings. 4,060,904, Cl. 33-172.00R.
Hitachi, Ltd.: *See—*
Hanma, Kentaro; and Miyazaki, Gentaro, 4,062,044, Cl. 358-21.000.
Kubota, Hitoshi; and Kobayashi, Takashi, 4,061,964, Cl. 324-28.0SE.
Miura, Yoshio; Kobayashi, Kazuhiro; and Kotera, Masao, 4,061,289, Cl. 242-7.130.
Hitachi Metals, Ltd.: *See—*
Higashinaka, Koichi; and Kai, Tetsuo, 4,061,221, Cl. 198-524.000.
Kondo, Takajiro; Asamoto, Toshitaka; and Oki, Tsutomu, 4,060,892, Cl. 30-253.000.
Hixson, Richard M., to Transit Products Company, Inc. Restraining rail mounting assembly. 4,061,269, Cl. 238-17.000.
Hoechst Aktiengesellschaft: *See—*
Bartmann, Wilhelm; Kunstmann, Rudolf; Lerch, Ulrich; and Scholkens, Bernward, 4,061,766, Cl. 424-279.000.
Beck, Gerhard; Kunstmann, Rudolf; Babej, Milos; and Teufel, Hermann, 4,061,671, Cl. 260-514.00D.
Ertel, Hartmut; Heubach, Gunther; and Wolf, Erhard, 4,061,767, Cl. 424-282.000.
Feser, Manfred; Joerchel, Egon; and Korinth, Jurgen, 4,061,723, Cl. 423-276.000.
Hahnke, Manfred; Hohmann, Kurt; and Papenfuhs, Theodor, 4,061,464, Cl. 8-79.000.
Holst, Arno; and Kostrzewa, Michael, 4,061,692, Cl. 260-874.000.
Lang, Hans-Jochen; and Muschaweck, Roman, 4,061,647, Cl. 260-306.70T.
Lang, Hans-Jochen; and Muschaweck, Roman, 4,061,761, Cl. 424-270.000.
Schallus, Erich; Mietens, Gerhard; Fucker, Gregor; Petrell, Jurgen; and Dorn, Friedrich Wilhelm, 4,061,719, Cl. 423-445.000.
Schroter, Herbert, 4,062,031, Cl. 354-299.000.
Teufel, Hermann; Bartmann, Wilhelm; Granzer, Ernold; and Musil, Josef, 4,061,772, Cl. 424-304.000.
Vollmer, Hartfrid; Dany, Franz-Josef; and Wortmann, Joachim, 4,061,696, Cl. 260-930.000.
von der Eltz, Hans-Ulrich; Feess, Erich; and Glander, Siegfried, 4,061,001, Cl. 68-200.000.
Hoehn, Hans: *See—*
Denzel, Theodor; and Hoehn, Hans, 4,061,632, Cl. 544-60.000.
Hoffman, Charles E., to Proctor & Schwartz, Inc. Apparatus for treating material with a gaseous medium. 4,060,914, Cl. 34-219.000.
Hoffman, Gordon Bates: *See—*
Callahan, Michael James, Jr.; and Hoffman, Gordon Bates, 4,061,886, Cl. 179-84.0VF.
Hoffman, John Ronald; and Marsland, Peter John, to American Cyanamid Company. Method of making a needled suture. 4,060,885, Cl. 29-407.000.
Hoffman, Louis S.; and McClosky, Robert B. Packaged units and method of making same. 4,061,783, Cl. 426-87.000.
Hoffman, Robert F.: *See—*
Bertozzi, Eugene R.; Hoffman, Robert F.; and Barclay, Robert, 4,061,612, Cl. 260-31.40R.

Hoffmann, Heinz: *See—*
Burckhardt, Christoph Benedikt; Grandchamp, Pierre-Andre; and Hoffmann, Heinz, 4,061,018, Cl. 73-629.000.
Hoffmann-La Roche Inc.: *See—*
Burckhardt, Christoph Benedikt; Grandchamp, Pierre-Andre; and Hoffmann, Heinz, 4,061,018, Cl. 73-629.000.
Demny, Thomas Casimir; and Maehr, Hubert, 4,061,542, Cl. 195-80.00R.
Hajos, Zoltan George, 4,061,679, Cl. 260-586.00F.
Klaus, Michael Josef; and Pawson, Beverly Ann, 4,061,656, Cl. 260-332.20A.
Scherrer, Hanspeter; and Boller, Arthur, 4,061,587, Cl. 252-299.000.
Szkrybalo, William, 4,061,489, Cl. 71-88.000.
Hogan, Thomas Leo: *See—*
Lang, Robert S.; Post, Rodney Morris; and Hogan, Thomas Leo, 4,060,946, Cl. 52-169.700.
Hoganas AB: *See—*
Ivarsson, Paul Lennart; and Havranek, Peter Harry, 4,061,501, Cl. 106-44.000.
Hohbach, Harold C : *See—*
Burroughs, Viola F.; Vahl, Hasso G.; and Wahl, Harro W. D., 4,061,518, Cl. 156-232.000.
Hohmann, Kurt: *See—*
Hahnke, Manfred; Hohmann, Kurt; and Papenfuhs, Theodor, 4,061,464, Cl. 8-79.000.
Hokkaido University, The President of: *See—*
Iwane, Waro, 4,062,045, Cl. 358-88.000.
Holloway, Donald F.: *See—*
Brodnyan, John G.; Holloway, Donald F.; and Le Sota, Stanley, 4,061,822, Cl. 428-315.000.
Holloway, Thomas M.: *See—*
Ley, Ralph M., Jr.; Alyea, Harold W.; and Holloway, Thomas M., 4,061,266, Cl. 236-49.000.
Holmstedt, Goran Solve: *See—*
Carlsson, Carl-Eric Waldenburg; and Holmstedt, Goran Solve, 4,062,008, Cl. 340-323.00R.
Holst, Arno; and Kostrzewa, Michael, to Hoechst Aktiengesellschaft. Process for the manufacture of swellable, absorptive polymers of polyhydroxy methylene. 4,061,692, Cl. 260-874.000.
Holst, Preben Lindholm: *See—*
Madsen, Hans Berg; Holst, Preben Lindholm; and Solli, Houk, 4,061,757, Cl. 424-263.000.
Holter, Heinz; Gresch, Heinz; and Igelbuscher, Heinrich, to Holter, Heinz. Gas purification method and apparatus. 4,061,476, Cl. 55-77.000.
Holter, Heinz; and Igelbuscher, Heinrich, to Holter, Heinz. Apparatus for and method of separating droplets of a liquid from a gas. 4,061,479, Cl. 55-257.00C.
Hooker Chemicals & Plastics Corporation: *See—*
Cook, Edward H., Jr.; and Emery, Alvin T., 4,061,550, Cl. 204-98.000.
Maul, James J.; and Pattison, Victor A., 4,061,688, Cl. 260-651.00F.
Hooker, James A.: *See—*
Easter, Rollen G.; and Hooker, James A., 4,061,073, Cl. 85-62.000.
Hoover Ball and Bearing Company: *See—*
Kitchen, John P.; and Riddle, Neville L., 4,060,862, Cl. 5-260.000.
Hope Co. Ltd.: *See—*
Murata, Masahiro, 4,061,358, Cl. 280-629.000.
Horie, Koji; and Mune, Takashi, to Toyota Jidosha Kogyo Kabushiki Kaisha; and Hosei Brake Industry Company. Process for bending metal sheet. 4,061,098, Cl. 113-116.00Q.
Horii, Sadashige: *See—*
Kimura, Rokusaburo; and Horii, Sadashige, 4,060,972, Cl. 58-16.00D.
Horstmann, Harald; Meng, Karl; and Wehinger, Egbert, to Bayer Aktiengesellschaft. 1-Substituted-3-amino-pyrazol-5-ones. 4,061,653, Cl. 548-360.000.
Hosack, Harold H., to Fairchild Camera and Instrument Corporation. Process for producing successive stages of a charge coupled device. 4,061,530, Cl. 156-653.000.
Hosei Brake Industry Company: *See—*
Horie, Koji; and Mune, Takashi, 4,061,098, Cl. 113-116.00Q.
Hoshino, Kazuo; and Tanbara, Masakazu, to Nissan Motor Co., Ltd. Internal shoe drum brake. 4,061,211, Cl. 188-79.50P.
Hosoi, Kameo: *See—*
Yoshida, Toru; Hosoi, Kameo; Yoshida, Tokuzo; Shimizu, Kazuyuki; and Nakagawa, Koithiro, 4,060,913, Cl. 34-80.000.
Hotten, Terrence Michael: *See—*
Chakrabarti, Jiban Kumar; Hotten, Terrence Michael; and Tupper, David Edward, 4,061,774, Cl. 424-325.000.
Howarth, Thomas Trefor, to Beecham Group Limited. Clavulanic acid sulphates. 4,061,649, Cl. 260-307.0FA.
Hsu, Li-Chen, to United States of America, National Aeronautics and Space Administration. Trimerization of aromatic nitriles. 4,061,856, Cl. 544-193.000.
Hu, Hung Liang: *See—*
Hannon, David Malcolm; and Hu, Hung Liang, 4,062,002, Cl. 365-27.000.
Hubner, Hans; Blahak, Johannes; and Meiners, Hans-Joachim, to Bayer Aktiengesellschaft. Phosphorus containing flame retarding agents which are reactive with isocyanates. 4,061,697, Cl. 260-944.000.
Hughes, James C. Ignition device for engines. 4,061,120, Cl. 123-143.00A.
Hughes, Richard H.; Jamieson, Donald R.; and Kochhar, Rajindar K., to Gulf Research & Development Company. Ethylene polymer acidification process. 4,061,847, Cl. 526-49.000.
Hughes Tool Company: *See—*
Hall, James R., 4,061,967, Cl. 324-260.000.
Hults, Harold W., to Cutler-Hammer, Inc. Higher rated double-pole trigger switch. 4,061,895, Cl. 200-157.000.
Hunts, Ronald M.: *See—*
Strange, Delbert D.; and Hunts, Ronald M., 4,061,437, Cl. 408-42.000.
Huret, Jacques A.: *See—*
Huret, Roger H.; and Huret, Jacques A., 4,061,048, Cl. 74-242.000.
Huret, Roger H.; and Huret, Jacques A. Bicycle gear change. 4,061.048, Cl. 74-242.000.
Hurst, Billy L. Adjustable carrying case system. 4,061,259, Cl. 224-51.000.
Husemann, Heinz: *See—*
Heitkamp, Herbert; and Husemann, Heinz, 4,060,992, Cl. 61-41.00A.
Husted, Allen. Golf swing aid. 4,061,340, Cl. 273-189.00R.
Hutkin, Irving J. Plastic-metal composite and method of making the same. 4,061,837, Cl. 428-609.000.
HWH Corporation: *See—*
Hanser, Paul Edmond, 4,061,309, Cl. 254-86.00H.
Hycel, Inc.: *See—*
DuBose, Charles Ray, 4,061,469, Cl. 23-253.00R.
Hycom Incorporated: *See—*
Motley, David M.; and Kameya, Andrew M., 4,061,977, Cl. 325-323.000.
Motley, David M.; Salman, Naif D.; and Cheng, King Y., 4,061,978, Cl. 325-324.000.
Hyden, Viktor Holger; and Hasselblad, Fritz Victor. Apparatus and method for selectively separating amino acids and defined proteins in blood. 4,061,141, Cl. 128-214.00R.
Hyster Company: *See—*
Cunningham, William L.; and Graham, Duane W., 4,061,238, Cl. 214-750.000.
Ichikawa, Kiyoshi: *See—*
Hayano, Fusakazu; Hashino, Yasuo; and Ichikawa, Kiyoshi, 4,061,821, Cl. 428-304.000.
ICI Australia Limited: *See—*
Graham, Clifford Arthur Andrew; and Linehan, Kevin Lawrence, 4,061,728, Cl. 424-14.000.
Ideal Security Hardware Corporation: *See—*
Waldo, Russell W., 4,061,383, Cl. 292-335.000.
Idelson, Elbert M., to Polaroid Corporation. Novel tetrazaporphins. 4,061,654, Cl. 260-314.500.
Igelbuscher, Heinrich: *See—*
Holter, Heinz; Gresch, Heinz; and Igelbuscher, Heinrich, 4,061,476, Cl. 55-77.000.
Holter, Heinz; and Igelbuscher, Heinrich, 4,061,479, Cl. 55-257.00C.
Iizuka, Haruhiko; Matsumoto, Junichiro; and Kato, Fumiaki, to Nissan Motor Co., Ltd. Fuel injection control system for an internal combustion engine of a vehicle. 4,061,055, Cl. 74-866.000.
Ikeura, Kenji, to Nissan Motor Co., Ltd. Method of controlling air-fuel mixture in internal combustion engine and a system therefor. 4,061,117, Cl. 123-119.0EC.
Ikoma, Hidenobu: *See—*
Kikumoto, Ryoji; Tobe, Akihiro; and Ikoma, Hidenobu, 4,061,776, Cl. 424-330.000.
Illy, Hugo: *See—*
Kirchmayr, Rudolf; and Illy, Hugo, 4,061,604, Cl. 260-2.5AJ.
Imperial Chemical Industries Limited: *See—*
Gould, Jack, 4,061,827, Cl. 428-368.000.
Turner, Mervyn Edward Dennant, 4,061,714, Cl. 423-220.000.
Imperial Group Limited: *See—*
Goslin, John Keith; and Tomlinson, Thomas Clifford, 4,061,148, Cl. 131-23.00R.
Inaba, Haruji: *See—*
Kitamura, Tatsuzo; and Inaba, Haruji, 4,061,559, Cl. 204-106.000.
Inagami, Kaoru; Mitsui, Isamu; Nakamura, Chomatsu; and Nozaka, Toru, to Calpis Shokuhin Kogyo Kabushiki Kaisha. Method of manufacturing a beverage containing fruit ingredients. 4,061,792, Cl. 426-330.200.
Inai, Yuichi: *See—*
Kijima, Shizumasa; Yamatsu, Isao; Minami, Norio; and Inai, Yuichi, 4,061,660, Cl. 260-396.00R.
Index-Werke KG Hahn & Tessky: *See—*
Lahm, Heinrich; and Gutbrod, Dieter, 4,061,061, Cl. 82-2.500.
Trautmann, Gunther, 4,061,060, Cl. 82-3.000.
Indexomatic, Inc.: *See—*
Robertson, Donald A., 4,061,076, Cl. 90-11.00A.
Ingle, Morton Blakeman: *See—*
Boyer, Ernest Wendell; and Ingle, Morton Blakeman, 4,061,541, Cl. 195-66.00R.
Innovation Enterprises, Inc.: *See—*
Fariss, James Douglas, Jr., 4,061,168, Cl. 144-193.00R.
Inokuchi, Takahiro, to Toko, Inc. Helical resonator filter. 4,061,992, Cl. 333-73.00R.
Inoue, Hayao: *See—*
Sato, Fumio; Sakamoto, Teruo; Watashiro, Seiichi; Inoue, Hayao; and Yahata, Yoshihito, 4,061,164, Cl. 141-90.000.
Inoue, Yasuhiko: *See—*
Itoh, Iko; Inoue, Yasuhiko; and Nagaoka, Kenji, 4,061,844, Cl. 526-4.000.

Institut Francais du Petrole: *See—*
Leleu, Gerard; Bedague, Pierre; and Sillion, Bernard, 4,061,581, Cl. 252-32.70E.
Intec Industries Inc.: *See—*
Essen, R. Eric, 4,061,226, Cl. 206-306.000.
Inter-American Transport Equipment Company: *See—*
Suarez, Diego Rolando, 4,061,235, Cl. 214-64.000.
International Business Machines Corporation: *See—*
Abbas, Shakir Ahmed; and Dockerty, Robert Charles, 4,062,040, Cl. 357-54.000.
Cuomo, Jerome John; DiStefano, Thomas Herman; and Rosenberg, Robert, 4,062,038, Cl. 357-30.000.
Habich, Adolph Broadus, 4,061,331, Cl. 271-223.000.
Hannon, David Malcolm; and Hu, Hung Liang, 4,062,002, Cl. 365-27.000.
Nussbaumer, Henri J., 4,062,060, Cl. 364-724.000.
Van Hook, Danny Allen, 4,060,907, Cl. 33-184.500.
International Computers Limited: *See—*
Dean, Anthony James, 4,061,969, Cl. 324-73.0PC.
International Flavors & Fragrances Inc.: *See—*
Evers, William J.; Heinsohn, Howard H., Jr.; and Vock, Manfred Hugo, 4,061,795, Cl. 426-535.000.
Evers, William J.; Heinsohn, Howard H., Jr.; and Vock, Manfred Hugo, 4,061,796, Cl. 426-535.000.
Hall, John B.; and Weigers, Wilhelmus Johannen, 4,061,686, Cl. 260-631.00R.
International Harvester Company: *See—*
Beck, Harold D., 4,061,188, Cl. 165-122.000.
Orth, Harold R.; and Swanson, William C., 4,061,079, Cl. 91-372.000.
International Standard Electric Corporation: *See—*
Andre, Wolfram, 4,061,942, Cl. 313-417.000.
Minks, Werner, 4,061,994, Cl. 335-202.000.
International Telephone and Telegraph Corporation: *See—*
Bauerkemper, Michael I., 4,061,522, Cl. 156-305.000.
Hanssen, Albert J., 4,061,157, Cl. 137-242.000.
Ohlstein, Herbert, 4,061,263, Cl. 228-124.000.
INTERx Research Corporation: *See—*
Bodor, Nicolae S., 4,061,722, Cl. 424-273.00R.
Bodor, Nicolae S.; and Sloan, Kenneth B., 4,061,753, Cl. 424-253.000.
Inventa AG fur Forschung und Patentverwertung: *See—*
Schaaf, Siegfried, 4,061,619, Cl. 260-29.20N.
Iowa State University Research Foundation, Inc.: *See—*
Baldwin, William I.; and Buchele, Wesley F., 4,061,021, Cl. 73-84.000.
Irie, Kenji: *See—*
Yamada, Hirotada; Okamura, Kosaku; Tobiki, Hisao; Tanno, Norihiko; Shimago, Kozo; Nakagome, Takenari; Komatsu, Toshiaki; Izawa, Akio; Noguchi, Hiroshi; Irie, Kenji; and Eda, Yasuko, 4,061,748, Cl. 424-246.000.
Isbister, Stephen W.: *See—*
Palmer, John P.; Isbister, Stephen W.; and Elvin, John D. F., 4,061,369, Cl. 292-163.000.
Ishigaki, Masahiro: *See—*
Yoshida, Akira; Kubo, Taketoshi; Yamajo, Mashayuki; and Ishigaki, Masahiro, 4,061,172, Cl. 152-379.100.
Ishii, Toyota: *See—*
Takase, Hideo; Ishii, Toyota; and Nishiumi, Shiro, 4,061,811, Cl. 428-95.000.
Ishikawa, Kazuo, to Aisin Seiki Kabushiki Kaisha. Engine exhaust brake controlled by transmission and accelerator. 4,061,215, Cl. 192-4.00A.
Ishikawa, Soji. Medical administering needle assembly with filter means. 4,061,143, Cl. 128-218.00N.
Istituto Luso Farmaco d'Italia S.r.l.: *See—*
Manghisi, Elso; Cascio, Giuseppe; and Fregnan, Giancarlo, 4,061,637, Cl. 260-268.0PH.
Ito, Chiaki, to Fujitsu Limited. Character recognition equipment. 4,061,998, Cl. 340-146.3AC.
Ito, Fumio: *See—*
Murakami, Hiroyashu; Ito, Tadashi; Ito, Fumio; Sakurada, Nobuaki; Kawamura, Mashaharu; and Shinoda, Nobuhiko, 4,062,022, Cl. 354-38.000.
Ito, Hiroyuki: *See—*
Hayashi, Masaki; Tanouchi, Tadao; Ito, Hiroyuki; and Ohyama, Isao, 4,061,865, Cl. 560-121.000.
Ito, Tadashi: *See—*
Murakami, Hiroyashu; Ito, Tadashi; Ito, Fumio; Sakurada, Nobuaki; Kawamura, Mashaharu; and Shinoda, Nobuhiko, 4,062,022, Cl. 354-38.000.
Itoh, Akio: *See—*
Kuroda, Nobuyuki; Shiraishi, Takeichi; Itoh, Akio; Matsuura, Kazuo; and Miyoshi, Mituji, 4,061,857, Cl. 526-114.000.
Itoh, Iko; Inoue, Yasuhiko; and Nagaoka, Kenji, to Sumitomo Chemical Company, Limited. Dyestuff acceptor for synthetic resins. 4,061,844, Cl. 526-4.000.
ITW Limited: *See—*
Palmer, John P.; Isbister, Stephen W.; and Elvin, John D. F., 4,061,369, Cl. 292-163.000.
Iura, Yukio: *See—*
Tezuka, Nobuo; Uchidoi, Masanori; Iura, Yukio; Watanabe, Satoshi; Yamamichi, Masayoshi; and Aizawa, Hiroshi, 4,062,028, Cl. 354-152.000.
Ivanova, Raisa Vasilievna; Belsky, Arkady Andreevich; Novikov, Nikolai Alexandrovich; Alexeeva, Nina Nikolaevna; Nikitina, Ljudmila Nikolaevna; Ljubimova, Nina Andreevna; and Dotsenko, Anna Evgenievna. Process for extraction of gallium from alkaline gallium-containing solutions. 4,061,551, Cl. 204-105.00R.
Ivarsson, Paul Lennart; and Havranek, Peter Harry, to Hoganas AB. Refractory linings. 4,061,501, Cl. 106-44.000.
Iwane, Waro, to Hokkaido University, The President of. Three-dimensional television system. 4,062,045, Cl. 358-88.000.
Iwasaki, Tameo: *See—*
Miyoshi, Munetsugu; Matsumoto, Kazuo; Urabe, Yuji; and Iwasaki, Tameo, 4,061,650, Cl. 260-307.00F.
Izawa, Akio: *See—*
Yamada, Hirotada; Okamura, Kosaku; Tobiki, Hisao; Tanno, Norihiko; Shimago, Kozo; Nakagome, Takenari; Komatsu, Toshiaki; Izawa, Akio; Noguchi, Hiroshi; Irie, Kenji; and Eda, Yasuko, 4,061,748, Cl. 424-246.000.
Izumi, Tsugio: *See—*
Kanegae, Junji; Izumi, Tsugio; and Mandai, Akio, 4,061,798, Cl. 426-607.000.
J. I. Case Company: *See—*
Dunn, Donnell Lynn, 4,061,201, Cl. 180-133.000.
J.M.J. Industries, Inc.: *See—*
Gundlach, Theodore F.; and Hawthorne, Arthur L., 4,061,281, Cl. 241-188.00R.
Jablin, Richard. Coke oven gas contact with liquor concentrate. 4,061,531, Cl. 159-48.00L.
Jackson, George Oliver, to United Kingdom Atomic Energy Authority. Nuclear reactors. 4,061,534, Cl. 176-37.000.
Jackson, John Lambert: *See—*
Archibald, John Leheup; and Jackson, John Lambert, 4,061,641, Cl. 260-293.610.
Jacob, Jose T., to Chemed Corporation. Corrosion inhibitor for cooling water systems. 4,061,589, Cl. 252-389.00A.
Jacobs, James W., to General Motors Corporation. Belt drive arrangement for agitator washer mechanism. 4,061,000, Cl. 68-23.700.
Jacobsen, Arnold Ralph; and Jaffe, I. Pompe, to Skyhook Sales Corporation. Suspended shelf bracket. 4,061,092, Cl. 108-149.000.
Jacoby, Marvin; and La Porta, Guido A. Universal angulometer. 4,061,924, Cl. 250-476.000.
Jaeger, Heimo, to Vereinigte Edelstahlwerke Aktiengesellschaft (VEW). Method for removing undesired elements, particularly H_2 and O_2, in electroslag remelting and an arrangement for carrying out the method. 4,061,493, Cl. 75-10.00C.
Jaffe Acoustics, Inc.: *See—*
Jaffe, J. Christopher, 4,061,876, Cl. 179-1.0AT.
Jaffe, I. Pompe: *See—*
Jacobsen, Arnold Ralph; and Jaffe, I. Pompe, 4,061,092, Cl. 108-149.000.
Jaffe, J. Christopher, to Jaffe Acoustics, Inc. Electronic sound enhancing system. 4,061,876, Cl. 179-1.0AT.
Jager, Philipp, to Siemens Aktiengesellschaft. Apparatus for controlling the electrolyte concentration of fuel cell batteries. 4,061,838, Cl. 429-22.000.
Jahn, Walter, to JENAer Glaswerk, Schott & Gen. Process for the manufacture of optical bodies with refractive index gradients. 4,061,486, Cl. 65-18.000.
Jahnke, Richard William, to Lubrizol Corporation, The. Thickened aqueous compositions for well treatment. 4,061,580, Cl. 252-8.55R.
Jakob, Edwin, to ETA A.G. Ebauches-Fabrik. Calendar ring driving wheel for timepieces. 4,060,976, Cl. 58-58.000.
Jamerson, Donald W. Template for lining sheet music paper. 4,060,901, Cl. 33-108.000.
Jamieson, Donald R.: *See—*
Hughes, Richard H.; Jamieson, Donald R.; and Kochhar, Rajindar K., 4,061,847, Cl. 526-49.000.
Jamison, Howard M., to United States of America, Army. Optical alignment device and method of use. 4,061,426, Cl. 356-138.000.
Jan Vader, Reinout. Electric energy conversion apparatus. 4,061,957, Cl. 363-22.000.
Janes, Robert W. Engine de-compression mechanism. 4,061,123, Cl. 123-198.00F.
Jaschke, Reinhold: *See—*
Birkenfeld, Richard; and Jaschke, Reinhold, 4,060,957, Cl. 53-26.000.
JENAer Glaswerk, Schott & Gen.: *See—*
Jahn, Walter, 4,061,486, Cl. 65-18.000.
Jensen, Richard H.; and Parris, Peter P., to Brooks & Perkins, Incorporated. Container and door. 4,060,936, Cl. 49-465.000.
Jeppson, Nils: *See—*
Carlsson, Carl-Eric Waldenburg; and Holmstedt, Goran Solve, 4,062,008, Cl. 340-323.00R.
Jimmy Dean Meat Company, Inc., The: *See—*
Bernard, Vincent E., 4,060,998, Cl. 62-320.000.
Joerchel, Egon: *See—*
Feser, Manfred; Joerchel, Egon; and Korinth, Jurgen, 4,061,723, Cl. 423-276.000.
Johansson, Johan Ingvar: *See—*
Fredriksson, Rune Osten Walter; Johansson, Johan Ingvar; and Boye, Erhard Rudolf, 4,061,261, Cl. 228-2.500.
John Dale Limited: *See—*
Brownbill, Thomas Duncan, 4,061,240, Cl. 215-270.000.
John Wyeth & Brother Limited: *See—*
Archibald, John Leheup; and Jackson, John Lambert, 4,061,641, Cl. 260-293.610.
Archibald, John Leheup, 4,061,758, Cl. 424-263.000.
Black, Robin Michael, 4,061,754, Cl. 424-258.000.
Cavalla, John Frederick; and Archibald, John Leheup, 4,061,640, Cl. 260-287.0CE.

Johnson, Bruce C.: *See—*
McBain, Robert T.; and Johnson, Bruce C., 4,060,978, Cl. 59-78.000.
Johnson Controls, Inc.: *See—*
Ley, Ralph M., Jr.; Alyea, Harold W.; and Holloway, Thomas M., 4,061,266, Cl. 236-49.000.
Johnson, Curtis D.; McFarland, Larry C.; and Antwiler, Lonnie D., to United States of America, Army. Ammunition feed mechanism. 4,061,074, Cl. 89-33.0CA.
Johnson, Douglas M., to Fluoroware, Inc. Shipping container for substrates. 4,061,228, Cl. 206-454.000.
Johnson, Matthey & Co., Limited: *See—*
Selman, Gordon Leslie; and Midgley, Richard John, 4,061,495, Cl. 75-134.00F.
Joly, Jean Claud: *See—*
Dechelette, Helen; and Joly, Jean Claud, 4,060,890, Cl. 29-628.000.
Jones, Glenn C.; and Meen, Ronald H., to Eastman Kodak Company. Electrolytic hydroquinone process. 4,061,548, Cl. 204-78.000.
Jones, Henry B.; and Bunn, Dorrance P., Jr., to Texaco Inc. High temperature and shock resistant insulated pipe. 4,061,162, Cl. 138-147.000.
Jones, Howard: *See—*
Shen, Tsung-Ying; Jones, Howard; and Dorn, Conrad P., 4,061,759, Cl. 424-263.000.
Jones, Ivor Wynn; Robinson, Graham; and Bird, Thomas Lewis, to Electricity Council, The. Sodium sulphur cells. 4,061,840, Cl. 429-104.000.
Jones, Larren F.: *See—*
Hahn, Frederick C.; and Jones, Larren F., 4,061,432, Cl. 403-318.000.
Jones, Max E.: *See—*
Colbert, Richard P.; Dimitriou, George; Jones, Max E.; and Haberman, Jack I., 4,062,012, Cl. 343-7.00A.
Jung, Rudolf: *See—*
Wild, Hans; Jung, Rudolf; Echte, Adolf; Zizlsperger, Johann; and Gausepohl, Hermann, 4,061,858, Cl. 526-67.000.
Kabas, Guglielmo: *See—*
Kormany, Geza; Kabas, Guglielmo; Schlapfer, Hans; and Siegrist, Adolf Emil, 4,061,860, Cl. 542-462.000.
Kabushiki Kaisha Daini Seikosha: *See—*
Asano, Kazuhiro, 4,061,929, Cl. 307-246.000.
Katagiri, Yoshio, 4,061,417, Cl. 350-159.000.
Kabushiki Kaisha Daisho: *See—*
Matsuura, Haruo, 4,060,893, Cl. 30-310.000.
Kabushiki Kaisha Fuji Seisakusho: *See—*
Sasaki, Hiromichi, 4,060,919, Cl. 40-104.00A.
Kabushiki Kaisha Sato Kenkyusho: *See—*
Sato, Yo, 4,061,808, Cl. 428-42.000.
Kabushiki Kaisha Suwa Seikosha: *See—*
Nishimura, Izuhiko, 4,062,039, Cl. 357-51.000.
Kadkade, Prakash G., to GTE Laboratories Incorporated. Tissue culture technique utilizing a specific light source. 4,060,933, Cl. 47-58.000.
Kahmann, Albrecht, to Escher Wyss GmbH. Refiner for grinding of fibrous material. 4,061,283, Cl. 241-261.300.
Kahr, Kurt; Pohl, Hanns; Rapp, Guenther; and Lauz, Peter, to BASF Aktiengesellschaft. Partial dehydration of cyclohexanone oxime. 4,061,677, Cl. 260-566.00A.
Kai, Tetsuo: *See—*
Higashinaka, Koichi; and Kai, Tetsuo, 4,061,221, Cl. 198-524.000.
Kaiser Resources Ltd.: *See—*
Parkes, David M., 4,061,398, Cl. 299-17.000.
Kali-Chemie Aktiengesellschaft: *See—*
Weidenbach, Guenter; Lecloux, Andre; and Gobillon, Yves, 4,061,713, Cl. 423-213.500.
Kalopissis, Gregoire; Bouillon, Claude; and Vayssie, Charles, to Societe Anonyme dite: L'Oreal. Anti-solar agent and compositions containing the same. 4,061,730, Cl. 424-59.000.
Kaluza, Hans-Joachim: *See—*
Brauner, Dieter; Kaluza, Hans-Joachim; and Muschelknautz, Edgar, 4,061,313, Cl. 366-340.000.
Kameya, Andrew M.: *See—*
Motley, David M.; and Kameya, Andrew M., 4,061,977, Cl. 325-323.000.
Kamiya, Shigemitsu, to Nippon Zeon Co. Ltd. Resin composition. 4,061,693, Cl. 260-876.00R.
Kamyr, Inc.: *See—*
Laakso, Oliver A.; and Sherman, Michael I., 4,061,193, Cl. 162-19.000.
Kanazawa, Shogo: *See—*
Yokokawa, Takao; Kanazawa, Shogo; Otoguro, Yasuo; Suzuki, Nobukazu; Akase, Sigeyuki; Miida, Noboru; Akazawa, Tadahisa; and Kuroiwa, Kazuya, 4,061,494, Cl. 75-124.000.
Kandpal, Tara, to Tecumseh Products Company (Compressor). Overload protector mounting apparatus. 4,061,935, Cl. 310-68.00C.
Kanebo, Ltd.: *See—*
Sugimoto, Isao; and Sawase, Yoko, 4,061,744, Cl. 424-243.000.
Kanegae, Junji; Izumi, Tsugio; and Mandai, Akio. Method for preparing hard butters from palm oil. 4,061,798, Cl. 426-607.000.
Kanno, Hideyuki, to Tomy Kogyo Co., Inc. Disc bowling game. 4,061,334, Cl. 273-126.00A.
Kano, Hideo: *See—*
Yukinaga, Hisajiro; Kano, Hideo; and Ogata, Masaru, 4,061,490, Cl. 71-68.000.
Kanojia, Ramesh M.; and Levine, Seymour D., to Ortho Pharmaceutical Corporation. Isolation of utero-evacuant substances from plant extracts. 4,061,739, Cl. 424-195.000.
Kaplan, Murray A.; Gottstein, William J.; and Granatek, Alphonse P., to Bristol-Myers Company. Derivatives of 7-(cyclized)phenylglycyl-3-triazolo-thio methyl cephalosporin. 4,061,862, Cl. 544-27.000.
Kaplan, Ricardo Gabriel. Separators for spacing records. 4,061,341, Cl. 274-1.00R.
Kaporovich, Vladimir Georgievich; Sereda, Viktor Grigorievich; Udovenko, Vitaly Kirillovich; Zelenskaya, Nadezhda Nikolaevna; Brazhnik, Viktor Yakovlevich; Sviridov, Evgeny Pavlovich; and Fabrichev, Jury Nikolaevich. Machine for spinning tubular workpieces. 4,061,009, Cl. 72-69.000.
Kaprelian, Edward K.; and Mimmack, William E., to Questar Corporation. Catadioptric lens system. 4,061,420, Cl. 350-199.000.
Karl Schmidt GmbH: *See—*
Diez, Adolf, 4,061,182, Cl. 164-309.000.
Karlsson, Birgitta Gunilla: *See—*
Af Ekenstam, Bo Thuresson; Aurell, Leif Eric; Claeson, Karl Goran; and Karlsson, Birgitta Gunilla, 4,061,625, Cl. 260-112.50R.
Karlsson, Jarding Urban; and Svensson, Hugo Ragnvald, to ABU Aktiebolag. Ring-shaped line protecting element for use in fishing reels. 4,061,288, Cl. 242-84.10K.
Karrer, Friedrich, to Ciba-Geigy Corporation. Diphenyl ether derivatives. 4,061,683, Cl. 260-613.00R.
Kashina, Valentina Fedorovna: *See—*
Blyakhman, Lazar Isaevich; Davydov, Sergei Lvovich; and Kashina, Valentina Fedorovna, 4,061,633, Cl. 544-106.000.
Kashmer, James C.; and Tobin, Charles R., to Air Products and Chemicals, Inc. Control valve. 4,061,160, Cl. 137-637.200.
Kasson, James M.; and Wood, Samuel F., to Rolm Corporation. Key telephone adapter for electronic telephone switching system. 4,061,887, Cl. 179-99.000.
Kasyanov, Grigory Ivanovich: *See—*
Andoniev, Sergei Mikhailovich; Granovsky, Boris Ruvimovich; Golod, Leonid Davydovich; Kudinov, Gennady Alexandrovich; Kasyanov, Grigory Ivanovich; Filipiev, Oleg Vladimirovich; Tseluiko, Jury Ivanovich; and Lysenko, Evgeny Eliseevich, 4,061,317, Cl. 266-193.000.
Katagiri, Yoshio, to Kabushiki Kaisha Daini Seikosha. Color filter. 4,061,417, Cl. 350-159.000.
Kataoka, Mutsuo: *See—*
Ohno, Masaji; and Kataoka, Mutsuo, 4,061,769, Cl. 424-283.000.
Kato, Fumiaki: *See—*
Iizuka, Haruhiko; Matsumoto, Junichiro; and Kato, Fumiaki, 4,061,055, Cl. 74-866.000.
Kato, Shinji, to Toyota Jidosha Kogyo Kabushiki Kaisha. Oil seal for rotary engine. 4,061,447, Cl. 418-142.000.
Kato, Shogo: *See—*
Kitai, Kiyoshi; Nakamura, Yukio; Kato, Shogo; and Nagaoka, Shinji, 4,062,029, Cl. 354-232.000.
Katoh, Kazumasa: *See—*
Saida, Yoshinori; and Katoh, Kazumasa, 4,061,116, Cl. 123-117.00D.
Katsuragawa, Kanzi; Hattori, Tatsuo; Kihara, Keiichi; and Tamabayashi, Hanzo, to Toyo Soda Manufacturing Co., Ltd. Process for producing ammonium p-styrenesulfonate. 4,061,669, Cl. 260-505.00N.
Kauffmann, J. H., to F & B Mfg. Co. Method and means for providing protective closures for high velocity applications. 4,061,139, Cl. 228-107.000.
Kaufhold, Manfred; and Wulf, Horst-Dieter, to Chemische Werke Huls Aktiengesellschaft. Oxo process with recovery of cobalt hydrocarbonyl in solution for recycle. 4,061,687, Cl. 260-632.0HF.
Kautz, Walter C., Jr. Engine pre-oiler. 4,061,204, Cl. 184-6.300.
Kawamoto, Tamio: *See—*
Toyota, Hiroshi; Nagatome, Kenji; and Kawamoto, Tamio, 4,061,217, Cl. 192-.052.
Kawamura, Mashaharu: *See—*
Murakami, Hiroyashu; Ito, Tadashi; Ito, Fumio; Sakurada, Nobuaki; Kawamura, Mashaharu; and Shinoda, Nobuhiko, 4,062,022, Cl. 354-38.000.
Kawanami, Shunpei; and Hanamoto, Yukimitsu, to Daiichi Koshuha Kogyo Kabushiki Kaisha. Method and apparatus for continuous bending of elongated materials. 4,061,005, Cl. 72-30.000.
Kawanobe, Kouhei: *See—*
Natori, Minoru; Hatuse, Toshikazu; Kawanobe, Kouhei; Ogawa, Hiroshi; Sekiya, Fukuo; Ebihara, Heihachiro; and Uchino, Misao, 4,060,974, Cl. 58-23.00R.
Kawaoka, Yutaka; Kifune, Tatsuo; Teshima, Masahiko; and Koizumi, Tatsuya, to Sanshin Kagaku Kogyo Company, Limited. Process for purification of crude 2-mercaptobenzothiazole. 4,061,646, Cl. 260-306.000.
Kawasaki Steel Corporation: *See—*
Hamada, Motoharu; and Harada, Shunichi, 4,061,801, Cl. 427-192.000.
Kawashima, Kazumi, to Matsushita Electric Industrial Co., Ltd. Channel selection apparatus provided with memory for digitalizing and storing channel selection voltage. 4,061,982, Cl. 325-464.000.
Kayanuma, Kanji, to Victor Company of Japan, Limited. Pulse generating device for regulating the rotational speed of a body. 4,061,950, Cl. 318-314.000.
Keck, John G.: *See—*
Alexander, Robert W.; and Keck, John G., 4,061,553, Cl. 204-114.000.
Keegan, William P. Pipettes. 4,061,037, Cl. 73-425.600.

Keene, Derek K.; and Hinde, Walter R., to Eaton Corporation. Vehicle service brake pedal. 4,061,053, Cl. 74-512.000.
Keller, Dale L., to Sheppard, Richard H. Undercutter attachment. 4,061,059, Cl. 82-1.00C.
Keller, Gerbert O. Multi-purpose tool. 4,060,902, Cl. 33-114.000.
Keller, Roman, to Siemens Aktiengesellschaft. Gasket for the high-frequency-tight connection of detachable metallic shielding elements. 4,061,413, Cl. 339-95.00R.
Keller, V. J.; and Taylor, William T. Combination wire line releasable overshot and pull tool. 4,061,389, Cl. 294-86.300.
Kendall Company, The: *See—*
Rappleyea, Frederick A., 4,060,855, Cl. 2-413.000.
Kennedy, Richard W.; and Tefft, Edward G., to General Electric Company. Producing glass passivated gold diffused rectifier pellets. 4,061,510, Cl. 148-187.000.
Kennelly, Jerauld M.: *See—*
Bast, Kenneth D.; and Kennelly, Jerauld M., 4,061,408, Cl. 339-75.00R.
KeNova AB: *See—*
Nilson, Billy N., 4,061,254, Cl. 222-494.000.
Kerb, Ulrich: *See—*
Wiechert, Rudolf; Kerb, Ulrich; and Engelfried, Otto, 4,061,661, Cl. 260-397.450.
Kerr, George T.; and Rollmann, Louis D., to Mobil Oil Corporation. Directed crystallization of synthetic aluminosilicates. 4,061,717, Cl. 423-329.000.
Kessler, Heinrich Hubert, to Siemens Aktiengesellschaft. Circuit arrangement for the protection of inputs of integrated MOS circuits. 4,061,928, Cl. 307-200.00B.
Kessler, Milton. Method of making a plastic container. 4,061,702, Cl. 264-24.000.
Kewannee Industries: *See—*
Lada, Arnold; Petrocci, Alfonso N.; Green, Harold A.; and Merianos, John J., 4,061,750, Cl. 424-249.000.
Keystone Products, Inc.: *See—*
D'Angelo, Robert A., 4,061,400, Cl. 301-37.0AT.
Khalifa, Ramzi A.: *See—*
Prather, Joseph E.; and Khalifa, Ramzi A., 4,061,371, Cl. 292-198.000.
Khasin, Kim Moiseevich: *See—*
Paton, Boris Evgenievich; Medovar, Boris Izrailevich; Baglai, Vitaly Mikhailovich; Latash, Jury Vadimovich; Emelyanenko, July Georgievich; Stupak, Leonid Mikhailovich; Alferov, Jury Fedorovich; Bondarenko, Oleg Petrovich; Schupak, Grigory Bentsionovich; Shuruev, Lev Andreevich; Khasin, Kim Moiseevich; Frolov, Jury Fedorovich; Salmin, Valery Vasilievich; Lugovsky, Vladimir Ivanovich; Marjuschenko, Vilen Fedorovich; Shaburov, Fedor Fedorovich; Schelkunov, Jury Andreevich, deceased; and Schelkunova, Margarita Petrovna, administratrix, 4,061,180, Cl. 164-252.000.
Khomenko, Vladimir Ivanovich: *See—*
Lifshits, Viktor Senderovich; Petrov, Georgy Nikolaevich; Pappkov, Oleg Sergeevich; Khomenko, Vladimir Ivanovich; Gerasimenko, Alexandr Yakovlevich; Taradaiko, Alexandr Korneevich; Zemchenko, Alexandr Mikhailovich; and Gremyakov, Ivan Petrovich, 4,061,078, Cl. 90-24.00C.
Khoury, Nick S., to Continental Group, Inc., The. End closure with variable size pour opening. 4,061,243, Cl. 220-269.000.
Kifune, Tatsuo: *See—*
Kawaoka, Yutaka; Kifune, Tatsuo; Teshima, Masahiko; and Koizumi, Tatsuya, 4,061,646, Cl. 260-306.000.
Kihara, Keiichi: *See—*
Katsuragawa, Kanzi; Hattori, Tatsuo; Kihara, Keiichi; and Tamabayashi, Hanzo, 4,061,669, Cl. 260-505.00N.
Kijima, Shizumasa; Yamatsu, Isao; Minami, Norio; and Inai, Yuichi, to Eisai Co., Ltd. Process for synthesis of coenzyme Q compounds. 4,061,660, Cl. 260-396.00R.
Kikkoman Shoyu Co., Ltd.: *See—*
Yoshida, Fumihiko; Mizusawa, Kiyoshi; and Nakamura, Kazuo, 4,061,540, Cl. 195-62.000.
Kikumoto, Ryoji; Tobe, Akihiro; and Ikoma, Hidenobu, to Mitsubishi Chemical Industries Ltd. Pharmaceutically active 2-omega-aminoalkoxydiphenyl ethers. 4,061,776, Cl. 424-330.000.
Kilty, Peter A.: *See—*
Nielsen, Robert P.; and Kilty, Peter A., 4,061,659, Cl. 260-348.340.
Kimbrough, Wade L. Control system for high pressure hydraulic system. 4,061,271, Cl. 239-1.000.
Kimura, Rokusaburo; and Horii, Sadashige, to Matsushita Electric Works, Ltd. Digital clock. 4,060,972, Cl. 58-16.00D.
Kindgren, Lee; and Swanson, James P., to W. A. Whitney Corporation. Apparatus for forming holes in the flanges of structural members. 4,061,064, Cl. 83-368.000.
King, Gerard J.; and Martino, Joseph F., Jr., to United States of America, Army. Silicon-insulator-polysilicon infrared imaging device and method of making same. 4,061,916, Cl. 250-332.000.
King Instrument Corporation: *See—*
King, James L., Sr.; King, James L., Jr.; and Cline, William E., 4,061,286, Cl. 242-56.00R.
King, James L., Jr.: *See—*
King, James L., Sr.; King, James L., Jr.; and Cline, William E., 4,061,286, Cl. 242-56.00R.
King, James L., Sr.; King, James L., Jr.; and Cline, William E., to King Instrument Corporation. Automatic cassette loader. 4,061,286, Cl. 242-56.00R.
King, Roy J., Jr.: *See—*
Bean, Charles P.; King, Roy J., Jr.; and Uzgiris, Egidijus E., 4,061,543, Cl. 195-103.50K.
Kingman, Stephen A.; and Weaver, Leslie A., to LeBoeuf, Eugene A. Transport lock for lift bed trailer. 4,061,353, Cl. 280-106.00T.
Kirchmayr, Rudolf; and Illy, Hugo, to Ciba-Geigy Corporation. Flameproofing of plastics. 4,061,604, Cl. 260-2.5AJ.
Kistler Instrumente AG: *See—*
Witzke, Gunther; and Baumgartner, Hans Ulrich, 4,061,035, Cl. 73-406.000.
Kitai, Kiyoshi; Nakamura, Yukio; Kato, Shogo; and Nagaoka, Shinji, to Seiko Koki Kabushiki Kaisha. Lens shutter actuating device for quick-return type single-lens reflex camera. 4,062,029, Cl. 354-232.000.
Kitamura, Kazuhiko, to Aisin Seiki Kabushiki Kaisha. Pressure and temperature responsive valve assembly. 4,061,265, Cl. 236-48.00R.
Kitamura, Shigeki: *See—*
Hashimoto, Kiyoshi; and Kitamura, Shigeki, 4,061,938, Cl. 310-168.000.
Kitamura, Tatsuzo; and Inaba, Haruji, to Mitsui Mining & Smelting Co., Ltd. Electrolytic cell and circulating method for electrolyte. 4,061,559, Cl. 204-106.000.
Kitamura, Tomosaburo, to Sony Corporation. Integrally sintered ceramic complex and method of manufacturing the same. 4,061,816, Cl. 428-218.000.
Kitao, Akihiro: *See—*
Murata, Michihiro; and Kitao, Akihiro, 4,061,583, Cl. 252-62.3BT.
Kitazawa Shoji Kabushiki Kaisha: *See—*
Yoshiike, Kiwamu; and Yazaki, Hitoshi, 4,061,307, Cl. 251-315.000.
Kitchen, John P.; and Riddle, Neville L., to Hoover Ball and Bearing Company. Box spring assembly having serpentine right angle bend springs therein. 4,060,862, Cl. 5-260.000.
Kiyonaga, Kazuo, to Union Carbide Corporation. Process for producing glass in a rotary furnace. 4,061,487, Cl. 65-135.000.
Kiyota, Yuhiko, to Mitsubishi Jidosha Kogyo Kabushiki Kaisha. Carburetor system for multicylinder engine. 4,061,118, Cl. 123-119.0LR.
Klassen, Horst Willi: *See—*
Gee, David William; Klassen, Horst Willi; and Rath, Heinrich Bernard, 4,061,209, Cl. 188-73.300.
Klaus, Michael Josef; and Pawson, Beverly Ann, to Hoffmann-La Roche Inc. Polyene compounds. 4,061,656, Cl. 260-332.20A.
Kleinerman, Marcos. Infrared detection and imaging, method and apparatus. 4,061,578, Cl. 250-330.000.
Klisch, Stephen Cajetan; and Martin, Charles Andrew, to Colgate-Palmolive Company. Olefin sulfonate detergent compositions. 4,061,586, Cl. 252-153.000.
KMS Fusion, Inc.: *See—*
Siebert, Larry D., 4,061,985, Cl. 331-94.50C.
Knofel, Hartmut; and Ellendt, Gunther, to Bayer Aktiengesellschaft. Process for the preparation of aromatic polyamines. 4,061,678, Cl. 260-570.00D.
Knott, Philip H. Toy dump truck having closed container of granular material. 4,060,931, Cl. 46-112.000.
Kobayashi, Kazuhiro: *See—*
Miura, Yoshio; Kobayashi, Kazuhiro; and Kotera, Masao, 4,061,289, Cl. 242-7.130.
Kobayashi, Makio: *See—*
Senjo, Teizo; and Kobayashi, Makio, 4,061,743, Cl. 423-235.000.
Kobayashi, Takashi: *See—*
Kubota, Hitoshi; and Kobayashi, Takashi, 4,061,964, Cl. 324-28.0SE.
Kobayashi, Yoshinari; Matuo, Ryukichi; and Nishiyama, Masashi, to Agency of Industrial Science & Technology. Method for adsorption of oils. 4,061,567, Cl. 210-40.000.
Kober, Hubert Reinhard, to Fixatorenbau Bertuch & Co. GmbH. Centrally anchored aligning device for machines. 4,061,298, Cl. 248-23.000.
Kobori, Toshio; Tsujimoto, Kayoshi; Nanba, Yasuhiro; and Yamada, Seiji, to Minolta Camera Kabushiki Kaisha. Exposure control devices for photographic cameras. 4,062,023, Cl. 354-38.000.
Kochhar, Rajindar K.: *See—*
Hughes, Richard H.; Jamieson, Donald R.; and Kochhar, Rajindar K., 4,061,847, Cl. 526-49.000.
Kockums Industri Aktiebolag: *See—*
Arnoldsson, Eric, 4,061,052, Cl. 74-498.000.
Kodama, Hachio: *See—*
Ozaki, Hiromi; Yamane, Mamoru; Kodama, Hachio; and Yoshika, Haruo, 4,061,472, Cl. 44-1.00R.
Koenig, Robert B.: *See—*
Carnahan, Joe B.; and Koenig, Robert B., 4,061,380, Cl. 339-8.00R.
Koerner, Heinz-Hermann: *See—*
Stastny, Fritz; Gaeth, Rudolf; Haardt, Udo; and Koerner, Heinz-Hermann, 4,061,701, Cl. 264-51.000.
Koester, Eberhard: *See—*
Ohlinger, Manfred; Schoenafinger, Eduard; Vaeth, Guenter; Stritzinger, Heinz; Koester, Eberhard; Schneehage, Hans Henning; and Steck, Werner, 4,061,726, Cl. 423-634.000.
Kohler, Werner, to Daimler-Benz Aktiengesellschaft. Warning device for indicating critical condition of starter batteries in vehicles. 4,061,839, Cl. 429-93.000.
Koizumi, Tatsuya: *See—*
Kawaoka, Yutaka; Kifune, Tatsuo; Teshima, Masahiko; and Koizumi, Tatsuya, 4,061,646, Cl. 260-306.000.
Kokusai Denshin Denwa Kabushiki Kaisha: *See—*
Yokoi, Hiroshi; and Akagawa, Masataka, 4,062,018, Cl. 343-754.000.

Kokusai Electric Co., Ltd.: *See—*
Mizushina, Youichi, 4,061,870, Cl. 13-24.000.
Komatsu, Toshiaki: *See—*
Yamada, Hirotada; Okamura, Kosaku; Tobiki, Hisao; Tanno, Norihiko; Shimago, Kozo; Nakagome, Takenari; Komatsu, Toshiaki; Izawa, Akio; Noguchi, Hiroshi; Irie, Kenji; and Eda, Yasuko, 4,061,748, Cl. 424-246.000.
Kondo, Takajiro; Asamoto, Toshitaka; and Oki, Tsutomu, to Hitachi Metals, Ltd. Cutter for semicylindrically curled paper. 4,060,892, Cl. 30-253.000.
Konig, Franz, to Fr. Ernst Fehrer Gesellschaft m. b. H. & Co., K.G. Textilmaschinenfabrik und Stahlbau. Apparatus for spinning textile fibers. 4,060,966, Cl. 57-58.890.
Koninklijke Emballage Industrie Van Leer B.V.: *See—*
Tasseron, Frans A. W., 4,061,239, Cl. 215-221.000.
Konishi, Masami; and Futamura, Kazumasa, to Toyota Jidosha Kogyo Kabushiki Kaisha. Exhaust gas purifier for an internal combustion engine. 4,060,982, Cl. 60-282.000.
Konishiroku Photo Industry Co., Ltd.: *See—*
Amano, Tadashi; and Nakamura, Masaji, 4,061,428, Cl. 356-175.000.
Kopp, Jean Ernest. Variable speed drive mechanism. 4,061,045, Cl. 74-198.000.
Koppers Company, Inc.: *See—*
van Ackeren, Joseph; and Helm, Edward J., 4,061,544, Cl. 202-141.000.
Korger, Heinz, to Hannes Marker. Ski brake. 4,061,355, Cl. 280-605.000.
Korinth, Jurgen: *See—*
Feser, Manfred; Joerchel, Egon; and Korinth, Jurgen, 4,061,723, Cl. 423-276.000.
Kormany, Geza; Kabas, Guglielmo; Schlapfer, Hans; and Siegrist, Adolf Emil, to Ciba-Geigy Corporation. Stilbene compounds. 4,061,860, Cl. 542-462.000.
Kostrzewa, Michael: *See—*
Holst, Arno; and Kostrzewa, Michael, 4,061,692, Cl. 260-874.000.
Kotera, Masao: *See—*
Miura, Yoshio; Kobayashi, Kazuhiro; and Kotera, Masao, 4,061,289, Cl. 242-7.130.
Kotezawa, Katsutaka; Onodera, Toshimi; Hayashi, Setsuo; and Shimanuki, Fujio, to Chiba Communications Industries, Inc. Simultaneous telecommunication between radio stations. 4,062,016, Cl. 343-178.000.
Kouvarellis, Georgeos Konstandenos: *See—*
Washburn, Owen Victor; Kouvarellis, Georgeos Konstandenos; and Ferguson, William Alexander, 4,061,565, Cl. 210-32.000.
Krakow, Heinz: *See—*
Bartels, Werner; and Krakow, Heinz, 4,061,264, Cl. 228-145.000.
Krasin, Thomas L., to Audio Visual Innovators Corporation. Automatically switched spare lamp for a light projector. 4,061,911, Cl. 362-20.000.
Krenzer, John, to Velsicol Chemical Corporation. Certain 5-acyloxy-1-thiadiazolyl-2-oxoimidazolidine compounds. 4,061,648, Cl. 260-/306.80D.
Kruse, Friedel: *See—*
Bantien, Jurgen; Bardenhagen, Dietrich; Mielke, Johannes; and Kruse, Friedel, 4,061,234, Cl. 214-6.00M.
Kubek, Andrew, Sr.: *See—*
Kubek, John, 4,061,296, Cl. 244-112.000.
Kubek, John, to Kubek, Andrew, Sr., a part interest. Braking system for ski or float equipped aircraft. 4,061,296, Cl. 244-112.000.
Kubik, Peter Steve, to Bell Telephone Laboratories, Incorporated. Circuit board terminal identification device. 4,061,410, Cl. 339-113.00B.
Kubo, Taketoshi: *See—*
Yoshida, Akira; Kubo, Taketoshi; Yamajo, Mashayuki; and Ishigaki, Masahiro, 4,061,172, Cl. 152-379.100.
Kubota, Hitoshi; and Kobayashi, Takashi, to Hitachi, Ltd. Armature operation-release testing apparatus. 4,061,964, Cl. 324-28.0SE.
Kuc, Anthony: *See—*
Kuc, John; and Kuc, Anthony, 4,061,013, Cl. 72-354.000.
Kuc, John; and Kuc, Anthony. Method of forming socket wrenches. 4,061,013, Cl. 72-354.000.
Kudinov, Gennady Alexandrovich: *See—*
Andoniev, Sergei Mikhailovich; Granovsky, Boris Ruvimovich; Golod, Leonid Davydovich; Kudinov, Gennady Alexandrovich; Kasyanov, Grigory Ivanovich; Filipiev, Oleg Vladimirovich; Tseluiko, Jury Ivanovich; and Lysenko, Evgeny Eliseevich, 4,061,317, Cl. 266-193.000.
Kuenzi, Ernst: *See—*
Dubied, Gilbert; and Kuenzi, Ernst, 4,060,939, Cl. 51-157.000.
Kuhfus, Gerd: *See—*
Gumb, Beverley William; Kuhfus, Gerd; and Cogan, Fredrick Thomas, 4,061,411, Cl. 339-159.00R.
Kunkle, John Philip, to AMP Incorporated. High current carrying connector. 4,061,406, Cl. 339-47.00C.
Kuno, Akira; and Shinoda, Yoshio, to Nippon Soken, Inc. Fuel-meter-combined fuel consumption rate meter. 4,061,023, Cl. 73-114.000.
Kunstmann, Rudolf: *See—*
Bartmann, Wilhelm; Kunstmann, Rudolf; Lerch, Ulrich; and Scholkens, Bernward, 4,061,766, Cl. 424-279.000.
Beck, Gerhard; Kunstmann, Rudolf; Babej, Milos; and Teufel, Hermann, 4,061,671, Cl. 260-514.00D.
Kunzle, Franz Martin, to Sandoz Ltd. 6-Piperazino-11-methylene-dibenzazepines[b,e]. 4,061,752, Cl. 424-250.000.
Kuramoto, Kazuo: *See—*
Nagano, Toshio; and Kuramoto, Kazuo, 4,061,365, Cl. 280-745.000.
Kuroda, Nobukazu, to Sony Corporation. High permeability, long wearing magnetic head alloy. 4,061,509, Cl. 148-31.550.
Kuroda, Nobuyuki; Shiraishi, Takeichi; Itoh, Akio; Matsuura, Kazuo; and Miyoshi, Mituji, to Nippon Oil Company Ltd. Process for preparing polyolefins. 4,061,857, Cl. 526-114.000.
Kuroiwa, Kazuya: *See—*
Yokokawa, Takao; Kanazawa, Shogo; Otoguro, Yasuo; Suzuki, Nobukazu; Akase, Sigeyuki; Miida, Noboru; Akazawa, Tadahisa; and Kuroiwa, Kazuya, 4,061,494, Cl. 75-124.000.
Kurosaki, Mutsuo, to Nifco Inc. Cord clamp. 4,061,299, Cl. 248-73.000.
Kurumada, Tomoyuki: *See—*
Murayama, Keisuke; Morimura, Syoji; Yoshioka, Takao; and Kurumada, Tomoyuki, 4,061,616, Cl. 260-45.80N.
Kvaerna, Sverre; and Barud, Sigvard, to Siemens Aktiengesellschaft. Patients support table. 4,061,324, Cl. 269-325.000.
L. B. Foster Company: *See—*
Herz, Alvin E., 4,061,196, Cl. 173-49.000.
L. F. Lang & Son Pools, Inc.: *See—*
Lang, Robert S.; Post, Rodney Morris; and Hogan, Thomas Leo, 4,060,946, Cl. 52-169.700.
Laakso, Oliver A.; and Sherman, Michael I., to Kamyr, Inc. Method and apparatus for digesting cellulose material without screening digesting liquid withdrawn through the digester top. 4,061,193, Cl. 162-19.000.
Laboratoire Suisse de Recherches Horlogeres: *See—*
Dubied, Gilbert; and Kuenzi, Ernst, 4,060,939, Cl. 51-157.000.
Lachnit, Wolfgang, to Berglein, Adolf. Machine for mechanical production of brick masonry. 4,060,955, Cl. 52-749.000.
Lacroix, Roger; and Lepere, Claude, to Sea Tank Co. S.A. Immersion of an offshore weight-structure having two compartments. 4,060,995, Cl. 61-92.000.
Lada, Arnold; Petrocci, Alfonso N.; Green, Harold A.; and Merianos, John J., to Kewannee Industries. Antimicrobial composition. 4,061,750, Cl. 424-249.000.
Lahm, Heinrich; and Gutbrod, Dieter, to Index-Werke KG Hahn & Tessky. Automatic turret lathe. 4,061,061, Cl. 82-2.500.
Lai Chen, Sow-Mei: *See—*
Floyd, Middleton Brawner, Jr.; Weiss, Martin Joseph; Grudzinskas, Charles Vincent; and Lai Chen, Sow-Mei, 4,061,670, Cl. 260-514.00D.
Lake, Anthony William; and Rose, Carl John, to Beecham Group Limited. Naphthalene derivatives having anti-inflammatory activity. 4,061,779, Cl. 424-331.000.
Lamb, Joe H. Braking system for motorized swimming pool covers. 4,060,860, Cl. 4-172.140.
Lamparter, Hansruedi, to Rieter Machine Works, Ltd. Apparatus for re-transferring power from mechanically driven and/or electrically braked motors of spinning machines. 4,061,948, Cl. 318-87.000.
Lane, Robert L.: *See—*
Sachuk, Daniel B.; and Lane, Robert L., 4,061,329, Cl. 271-10.000.
Lang, Hans-Jochen; and Muschaweck, Roman, to Hoechst Aktiengesellschaft. Thiazolidine derivatives. 4,061,647, Cl. 260-306.70T.
Lang, Hans-Jochen; and Muschaweck, Roman, to Hoechst Aktiengesellschaft. Thiazolidine derivatives. 4,061,761, Cl. 424-270.000.
Lang, Richard A. Pedal-actuated bicycle gear shift means. 4,061,046, Cl. 74-217.00B.
Lang, Robert S.; Post, Rodney Morris; and Hogan, Thomas Leo, to L. F. Lang & Son Pools, Inc. In-ground swimming pool construction. 4,060,946, Cl. 52-169.700.
Langdon, William Keith: *See—*
Helfert, Herbert; Langdon, William Keith; and Davis, Pauls, 4,061,684, Cl. 260-615.00B.
Lange, Hans; Rittersdorf, Walter; Rey, Hans-Georg; Werner, Wolfgang; and Rieckmann, Peter, to Boehringer Mannheim GmbH. Stable test strips having a water-soluble paper layer and methods for making same. 4,061,468, Cl. 23-253.0TP.
Langlie, Howard: *See—*
Berg, Albert T., Jr.; and Langlie, Howard, 4,061,873, Cl. 174-208.000.
Lantz, Charles Hunter, to B. F. Goodrich Company, The. Brake pressure control valve. 4,061,404, Cl. 303-118.000.
La Porta, Guido A.: *See—*
Jacoby, Marvin; and La Porta, Guido A., 4,061,924, Cl. 250-476.000.
Laptewicz, Joseph E., Jr.: *See—*
Finn, Robert K.; Tannahill, Alex L.; and Laptewicz, Joseph E., Jr., 4,061,585, Cl. 252-89.00R.
Larson, Robert W. Flail delimber. 4,061,166, Cl. 144-2.00Z.
Last, Anthony J., to Ewald, John S. Ultraviolet sensing device. 4,061,922, Cl. 250-461.00R.
Last, Werner, to Toosbuy, Karl-Heinz Werner. Chassis for a vehicle capable of travelling over obstructions. 4,061,199, Cl. 180-8.00A.
Latash, Jury Vadimovich: *See—*
Paton, Boris Evgenievich; Medovar, Boris Izrailevich; Baglai, Vitaly Mikhailovich; Latash, Jury Vadimovich; Emelyanenko, July Georgievich; Stupak, Leonid Mikhailovich; Alferov, Jury Fedorovich; Bondarenko, Oleg Petrovich; Schupak, Grigory Bentsionovich; Shuruev, Lev Andreevich; Khasin, Kim Moiseevich; Frolov, Jury Fedorovich; Salmin, Valery Vasilievich; Lugovsky, Vladimir Ivanovich; Marjuschenko, Vilen Fedorovich; Shaburov, Fedor Fedorovich; Schelkunov, Jury Andreevich, deceased; and Schelkunova, Margarita Petrovna, administratrix, 4,061,180, Cl. 164-252.000.
Lauz, Peter: *See—*
Kahr, Kurt; Pohl, Hanns; Rapp, Guenther; and Lauz, Peter, 4,061,677, Cl. 260-566.00A.

Laver, Myron B.: *See—*
Morris, Kent C.; Bonsen, Pieter; and Laver, Myron B., 4,061,736, Cl. 424-177.000.
LaVoie, Raymond V.: *See—*
Frye, Burton L.; Pittman, Max G.; Runge, David A.; Souza, Lawrence C.; and LaVoie, Raymond V., 4,061,480, Cl. 55-356.000.
Lawrence, Anne M.: *See—*
Lawrence, Dennis G.; and Lawrence, Anne M., 4,060,861, Cl. 4-253.000.
Lawrence, Dennis G.; and Lawrence, Anne M. Protective device for a toilet lid. 4,060,861, Cl. 4-253.000.
Lawrence, John B.: *See—*
Campbell, Roy E.; Lawrence, John B.; and Tonne, Ronald Ray, 4,061,481, Cl. 62-29.000.
Lazarus, Stanley David; and Newland, Julian Harold, to Allied Chemical Corporation. Stabilized polyamides. 4,061,708, Cl. 264-211.000.
Lebedev, Vladimir Mikhailovich: *See—*
Bart, Evgeny Vasilievich; Batalin, Oleg Efimovich; Troitsky, Andrian Petrovich; Skachkova, Nina Andreevna; Lebedev, Vladimir Mikhailovich; and Trifonova, Rimma Petrovna, 4,061,680, Cl. 260-606.000.
Le Blanc, Mervin G. Jig for electrical conduit stubs. 4,061,322, Cl. 269-43.000.
LeBoeuf, Eugene A.: *See—*
Kingman, Stephen A.; and Weaver, Leslie A., 4,061,353, Cl. 280-106.00T.
Lecloux, Andre: *See—*
Weidenbach, Guenter; Lecloux, Andre; and Gobillon, Yves, 4,061,713, Cl. 423-213.500.
Lee, Chin Kee, to R. J. Reynolds Tobacco Company. Preparation and use of glucose isomerase. 4,061,539, Cl. 195-31.00F.
Leesona Corporation: *See—*
Walker, William J.; and Boulay, Henri A., 4,061,282, Cl. 241-222.000.
Legille, Edouard, to S.A. des Anciens Etablissements Paul Wurth. Device for the extraction of gaseous samples and for thermal measurement above the burden of a shaft furnace. 4,061,036, Cl. 73-421.50A.
Lehmann, William F.: *See—*
Geimer, Robert L.; and Lehmann, William F., 4,061,813, Cl. 428-183.000.
Lekarski, Simeon: *See—*
Gachot, Jean; and Lekarski, Simeon, 4,061,156, Cl. 137-109.000.
Leleu, Gerard; Bedague, Pierre; and Sillion, Bernard, to Institut Francais du Petrole; and Rhone Progil. Trimethylolpropane esters useful as base lubricants for motor oils. 4,061,581, Cl. 252-32.70E.
Lennox Industries, Inc.: *See—*
Dirk, William R.; and Parker, Sidney A., 4,061,444, Cl. 417-312.000.
Leonard, Ronald J., to Baxter Travenol Laboratories, Inc. Blood oxygenator utilizing a removable membrane oxygenator unit. 4,061,470, Cl. 23-258.50M.
Lepere, Claude: *See—*
Lacroix, Roger; and Lepere, Claude, 4,060,995, Cl. 61-92.000.
Lerch, Ulrich: *See—*
Bartmann, Wilhelm; Kunstmann, Rudolf; Lerch, Ulrich; and Scholkens, Bernward, 4,061,766, Cl. 424-279.000.
Lerner, David S.: *See—*
Freed, Gerald Lewis; and Lerner, David S., 4,062,005, Cl. 340-198.000.
Lerner, Henry C. Wire stripper. 4,060,891, Cl. 30-90.100.
Lerner, Stanley; and Shearer, Robert, to Color Communications, Inc. Method and apparatus for manufacture of swatch bearing sheets. 4,061,521, Cl. 156-265.000.
Leslie Hartridge Limited: *See—*
Emerson, Reginald Stanley, 4,061,027, Cl. 73-119.00
Le Sota, Stanley: *See—*
Brodnyan, John G.; Holloway, Donald F.; and Le Sota, Stanley, 4,061,822, Cl. 428-315.000.
Leto, Armetia E.; and Bauer, Lawrence H. Doll with internal warming mechanism. 4,060,932, Cl. 46-116.000.
Leuchter, Jurgen, to AGFA-Gevaert Aktiengesellschaft. Apparatus for removing liquids from moving strips of photographic material or the like. 4,060,873, Cl. 15-256.500.
Levasseur, Craig, to Berkey-Colortran, Inc. Filament alignment mechanism for follow spot or the like. 4,061,912, Cl. 362-287.000.
Levijoki, Wayne A.: *See—*
Peterson, Philip R.; Taylor, David W.; and Levijoki, Wayne A., 4,061,402, Cl. 303-92.000.
Levine, Marshall S.; and Faulkner, Albert A., to SmithKline Corporation. Slide smearing device. 4,061,108, Cl. 118-100.000.
Levine, Seymour D.: *See—*
Kanojia, Ramesh M.; and Levine, Seymour D., 4,061,739. Cl. 424-195.000.
Lewandowski, Raymond F., to Oak Industries Inc. Hall effect linear motion switch. 4,061,988, Cl. 338-32.00H.
Lewis, Michael Roland. Drive mechanism for reclining chairs. 4,061,397, Cl. 297-330.000.
Lewis, William Dein: *See—*
Cohen, Lester Samuel; and Lewis, William Dein, 4,061,572, Cl. 210-168.000.
Ley, Ralph M., Jr.; Alyea, Harold W.; and Holloway, Thomas M., to Johnson Controls, Inc. Environmental air distribution control system powered by system pressure. 4,061,266, Cl. 236-49.000.
Leybold-Heraeus GmbH & Co. KG: *See—*
Sommerkamp, Peter; and Heil, Walter, 4,061,871, Cl. 13-31.000.
Licentia Patent-Verwaltungs-G.m.b.H.: *See—*
Baumgartel, Karl Heinz; Altenburg, Dieter; and Hase, Siegfried, 4,061,332, Cl. 271-270.000.
Liebetrau, Richard E.: *See—*
Miller, Larry J.; Miller, Marion V.; and Liebetrau, Richard E., 4,060,935, Cl. 49-25.000.
Lien, Eric L.: *See—*
Alburn, Harvey E.; Lien, Eric L.; and Grant, Norman H., 4,061,737, Cl. 424-177.000.
Lifetime Carbide Company: *See—*
Gray, Gorman D., 4,061,057, Cl. 76-112.000.
Lifshits, Viktor Senderovich; Petrov, Georgy Nikolaevich; Papkov, Oleg Sergeevich; Khomenko, Vladimir Ivanovich; Gerasimenko, Alexandr Yakovlevich; Taradaiko, Alexandr Korneevich; Zemchenko, Alexandr Mikhailovich; and Gremyakov, Ivan Petrovich. Device for removing external circular fins from pipe joints. 4,061,078, Cl. 90-24.00C.
Light, Stanley. Gauge for mounting window-shade brackets. 4,060,905, Cl. 33-180.00R.
Lillis, Rupert Martin: *See—*
Duffield, Peter Roe; Flockton, Peter Robin; Lillis, Rupert Martin; Turner, Brian Maurice; and Crowell, Donald Edward, 4,061,706, Cl. 264-90.000.
Lilly Industries, Limited: *See—*
Chakrabarti, Jiban Kumar; Hotten, Terrence Michael; and Tupper, David Edward, 4,061,774, Cl. 424-325.000.
Lin, Chiu-Hong, to Upjohn Company, The. 5,6-Didehydro-ω-phenoxy-$PGE_{2\alpha}$analogs. 4,061,665, Cl. 260-410.90R.
Lin, Chiu-Hong, to Upjohn Company, The. 5,6-Didehydro-ω-aryl-11-deoxy-PGE_2 analogs. 4,061,666, Cl. 560-53.000.
Lincoln, Launa J. Geographic board game. 4,061,336, Cl. 273-134.0AC.
Lindbergh, Jon M., to Union Carbide Corporation. Net-raising tool. 4,061,387, Cl. 294-26.000.
Lindler, James Monroe; and Romanyszyn, Michael Taras, Jr., to Shakespeare Company. Flexible hollow fishing rod. 4,061,806, Cl. 428-35.000.
Lindmark, Nils Roger: *See—*
Sjoholm, Ingvar Gosta Holger; Lindmark, Nils Roger; and Ekman, Bo Magnus, 4,061,466, Cl. 23-230.00B.
Lindsley, John Francis: *See—*
Goldstein, Marvin Sherwood; Lindsley, John Francis; Allison, William Woodrow; and Price, Charles Dan, 4,061,597, Cl. 252-465.000.
Line, Larry L.: *See—*
George, Jay R.; Line, Larry L.; and Reed, David H., 4,061,516, Cl. 156-94.000.
Linehan, Kevin Lawrence: *See—*
Graham, Clifford Arthur Andrew; and Linehan, Kevin Lawrence, 4,061,728, Cl. 424-14.000.
Lingl Corporation: *See—*
Lingl, Hans, 4,061,528, Cl. 156-561.000.
Lingl, Hans, to Lingl Corporation. Apparatus for the manufacture of prefabricated lined wall sections. 4,061,528, Cl. 156-561.000.
Link, Gustav A. Timing system for watering devices. 4,061,927, Cl. 307-41.000.
Litva, John; and Stevens, Everett Earle. Rapid azimuthal determination of radio signals. 4,062,015, Cl. 343-120.000.
Liuzza, James J. Bar chair for reinforcing rods. 4,060,954, Cl. 52-677.000.
Livingston, Harry E.: *See—*
Marks, Arnold, 4,061,170, Cl. 150-52.00R.
Ljubimova, Nina Andreevna: *See—*
Ivanova, Raisa Vasilievna; Belsky, Arkady Andreevich; Novikov, Nikolai Alexandrovich; Alexeeva, Nina Nikolaevna; Nikitina, Ljudmila Nikolaevna; Ljubimova, Nina Andreevna; and Dotsenko, Anna Evgenievna, 4,061,551, Cl. 204-105.00R.
Ljung, Ake, to AB Svenska Flaktfabriken. Combined cooling and heat recovery system. 4,061,186, Cl. 165-59.000.
Lloyd, Donald, to Tex-Tube Division of Detroit Steel Corporation. Apparatus for providing regulated direct current to magnetizing coils for non-destructive magnetic testing. 4,061,960, Cl. 323-9.000.
Lo, Kenneth K., to Raymond Lee Organization, Inc., The, a part interest. Balloon with manually operable helicopter blades. 4,061,293, Cl. 244-26.000.
Lobmeyer, Raymond Joseph: *See—*
Hilgert, Charles William; and Lobmeyer, Raymond Joseph, 4,061,576, Cl. 210-437.000.
Lockheed Electronics Co., Inc.: *See—*
Freed, Gerald Lewis; and Lerner, David S., 4,062,005, Cl. 340-198.000.
Lof, George O. G. Solar heating system and operation thereof. 4,061,267, Cl. 237-1.00A.
Lofquist, Robert Alden; and Haylock, John Christopher, to Allied Chemical Corporation. Production of polycaproamide fiber from polycaproamide reacted with cyclic tetracarboxylic acid dianhydride. 4,061,621, Cl. 260-78.00L.
Lohr-Construction de Vehicules Industriels S.A.: *See—*
Schall, Roger, 4,061,390, Cl. 296-1.00A.
Lorain Products Corporation: *See—*
Chambers, Charles W., Jr., 4,061,883, Cl. 179-16.00F.
Lorenz, Hellmut, to Barmag Barmer Maschinenfabrik Aktiengesellschaft. False twisters. 4,060,967, Cl. 57-77.450.
Lotspeich, Joseph A., to Gross-Given Manufacturing Company. Helical coil dispensing machine apparatus. 4,061,245, Cl. 221-75.000.
Louisville Bedding Company: *See—*
Elsas, Norman E., 4,061,096, Cl. 112-121.140.

Love, Mahlon Lloyd: *See—*
Hengen, Edward John; and Love, Mahlon Lloyd, 4,060,960, Cl. 56-14.600.
Love, Richard F.; and Duranleau, Roger G., to Texaco Inc. Preparation of 3,5-disubstituted-4-nitroisoxazoles. 4,061,651, Cl. 260-307.00H.
Loveland, Winton: *See—*
Warshaw, Saul; Loveland, Winton; Hanemann, Horst J.; and Ramaglia, Michael, 4,061,526, Cl. 156-468.000.
Loveshaw Corporation, The: *See—*
Warshaw, Saul; Loveland, Winton; Hanemann, Horst J.; and Ramaglia, Michael, 4,061,526, Cl. 156-468.000.
Lowder, James E.; and Perry, Gary D., to Eagle-Picher Industries, Inc. Side tilt integrated cab. 4,061,392, Cl. 296-28.00C.
Lubrizol Corporation, The: *See—*
Jahnke, Richard William, 4,061,580, Cl. 252-8.55R.
Steckel, Thomas Frier, 4,061,474, Cl. 44-66.000.
Lugovsky, Vladimir Ivanovich: *See—*
Paton, Boris Evgenievich; Medovar, Boris Izrailevich; Baglai, Vitaly Mikhailovich; Latash, Jury Vadimovich; Emelyanenko, July Georgievich; Stupak, Leonid Mikhailovich; Alferov, Jury Fedorovich; Bondarenko, Oleg Petrovich; Schupak, Grigory Bentsionovich; Shuruev, Lev Andreevich; Khasin, Kim Moiseevich; Frolov, Jury Fedorovich; Salmin, Valery Vasilievich; Lugovsky, Vladimir Ivanovich; Marjuschenko, Vilen Fedorovich; Shaburov, Fedor Fedorovich; Schelkunov, Jury Andreevich, deceased; and Schelkunova, Margarita Petrovna, administratrix, 4,061,180, Cl. 164-252.000.
Lummus Company, The: *See—*
Sze, Morgan C., 4,061,471, Cl. 23-260.000.
Lund, Rolf, to Oy E. Sarlin AB. Seal for a rotating shaft. 4,061,345, Cl. 277-88.000.
Lunn, William H. W., to Eli Lilly and Company. 7-[α-(2,3-dihydro-2-oxo-1H-benzimidazol-1-ylcarbonyl-amino)arylacetamido]cephalosporins. 4,061,861, Cl. 544-30.000.
Lux, Peter: *See—*
Mollendorf, Ralf; and Lux, Peter, 4,061,920, Cl. 250-413.000.
Lynch, Thomas J.: *See—*
Goel, Rajeshwar P.; Vota, Terry L.; and Lynch, Thomas J., 4,061,937, Cl. 310-65.000.
Lysenko, Evgeny Eliseevich: *See—*
Andoniev, Sergei Mikhailovich; Granovsky, Boris Ruvimovich; Golod, Leonid Davydovich; Kudinov, Gennady Alexandrovich; Kasyanov, Grigory Ivanovich; Filipiev, Oleg Vladimirovich; Tseluiko, Jury Ivanovich; and Lysenko, Evgeny Eliseevich, 4,061,317, Cl. 266-193.000.
MacConnell, John W.: *See—*
United States of America, National Aeronautics and Space Administration; Sydnor, Richard L.; and MacConnell, John W., 4,061,974, Cl. 325-58.000.
Machinefabriek Mampaey Marine Engineering B. V.: *See—*
Mampaey, Johannes Josephus, 4,061,103, Cl. 114-252.000.
MacLeod, John Norman, to Tecumseh Products Company. Magneto-alternator with magneto energy limiting. 4,061,121, Cl. 123-149.00R.
MacMillan Bloedel Limited: *See—*
Barnes, Derek, 4,061,819, Cl. 428-294.000.
Madacsi, John P.: *See—*
Franklin, William E.; Madacsi, John P.; and Rowland, Stanley P., 4,061,465, Cl. 8-185.000.
Madaus, Rolf Hermann Heinrich; Halbach, Gunter; and Trost, Wilfried, to Dr. Madaus & Co. Polyhydroxyphenylchromanone salts and therapeutic composition. 4,061,765, Cl. 424-278.000.
Madsen, Hans Berg; Holst, Preben Lindholm; and Solli, Houk, to A/S Cheminova. Compounds having juvenile hormone activity. 4,061,757, Cl. 424-263.000.
Maeda, Toshiyuki: *See—*
Sakamaki, Hiroshi; Maeda, Toshiyuki; Sakai, Toshimitsu; and Saitou, Tadashi, 4,061,446, Cl. 418-133.000.
Maehr, Hubert: *See—*
Demny, Thomas Casimir; and Maehr, Hubert, 4,061,542, Cl. 195-80.00R.
Magid, Robert P.; and Sly, Gerald, to Oxford Chemicals, Incorporated. Self-adhering material. 4,061,820, Cl. 428-311.000.
Magidoff, Barry G.: *See—*
Rosenfeld, Steven Allen, 4,061,910, Cl. 362-34.000.
Magne, Frank C.: *See—*
Mod, Robert R.; Magne, Frank C.; Sumrell, Gene; and Novak, Arthur F., 4,061,634, Cl. 544-158.000.
Magneron, Jean, to E.L.A.P. Transmission system and repeater stations therefor. 4,061,970, Cl. 325-2.000.
Magnesium Elektron Limited: *See—*
Phillips, Raymond Francis, 4,061,720, Cl. 423-265.000.
Makar, Kamel Michel, to Du Pont de Nemours, E. I., and Company. Catalyst for hydrogenating anthraquinones. 4,061,598, Cl. 252-466.0PT.
Mampaey, Johannes Josephus, to Machinefabriek Mampaey Marine Engineering B. V. Towing hook. 4,061,103, Cl. 114-252.000.
Mandai, Akio: *See—*
Kanegae, Junji; Izumi, Tsugio; and Mandai, Akio, 4,061,798, Cl. 426-607.000.
Mandel, Albert. Longitudinally expandable shoe. 4,060,918, Cl. 36-97.000.
Mangei, Bernd: *See—*
Winkler, Bruno; Mangei, Bernd; and Fritz, Dieter, 4,061,786, Cl. 426-138.000.
Manghisi, Elso; Cascio, Giuseppe; and Fregnan, Giancarlo, to Istituto Luso Farmaco d'Italia S.r.l. Certain 4-aryl-5-(4-phenylpiperazino)alkyl-4-thiazolin-2-ones. 4,061,637, Cl. 260-268.0PH.
Mann, Elton W., to Hershey Foods Corporation. Plant treating mixtures and methods utilizing spores of *Bacillus uniflayellatus*. 4,061,488, Cl. 71-77.000.
Mannens, Marc Godfried: *See—*
Monbaliu, Marcel Jacob; Mannens, Marc Godfried; Van Poucke, Raphael Karel; Credner, Hans-Heinrich; and Meier, Ernst, 4,061,498, Cl. 96-100.00R.
Manufacturing Approaches & Total Concepts, Inc.: *See—*
Strange, Delbert D.; and Hunts, Ronald M., 4,061,437, Cl. 408-42.000.
Mar-Pha, Societe d'Etudeet d'Exploitation de Marques Mar-Pha: *See—*
Mardiguian, Jean, 4,061,777, Cl. 424-330.000.
Marans, Nelson Samuel; and Gluecksmann, Alfred, to W. R. Grace & Co. Removal of unreacted tolylene diisocyanate from urethane prepolymers. 4,061,662, Cl. 560-26.000.
Marcalus, Nicholas; and Smaw, Jesse B. Methods and apparatus for interfolding endless paper webs. 4,061,325, Cl. 270-40.000.
Marcantonio, Livio F.; and D'Haem, Marcel P., to Chicago Pneumatic Tool Company. Locomotive speed recorder system. 4,061,039, Cl. 73-489.000.
Marcus, Harris L.: *See—*
United States of America, National Aeronautics and Space Administration; Stocker, Phillip J.; and Marcus, Harris L., 4,061,427, Cl. 356-159.000.
Marcus, Paul. Injection blow molding process. 4,061,705, Cl. 264-89.000.
Mardiguian, Jean, to Mar-Pha, Societe d'Etudeet d'Exploitation de Marques Mar-Pha. Vasodilatory terpeno-phenoxyalkylamines. 4,061,777, Cl. 424-330.000.
Marforio, Nerino, to Rockwell-Rimoldi S.p.A. Unit for automatically sewing the opposite edges of piece of fabric. 4,061,097, Cl. 112-121.150.
Margotte, Dieter; and Vernaleken, Hugo, to Bayer Aktiengesellschaft. Flame-resistant polycarbonate molding compositions. 4,061,691, Cl. 260-860.000.
Marino, Joseph A.: *See—*
Batchelor, Phillip J.; Traister, Robert L.; Gray, Gary A.; and Marino, Joseph A., 4,062,061, Cl. 364-900.000.
Marjuschenko, Vilen Fedorovich: *See—*
Paton, Boris Evgenievich; Medovar, Boris Izrailevich; Baglai, Vitaly Mikhailovich; Latash, Jury Vadimovich; Emelyanenko, July Georgievich; Stupak, Leonid Mikhailovich; Alferov, Jury Fedorovich; Bondarenko, Oleg Petrovich; Schupak, Grigory Bentsionovich; Shuruev, Lev Andreevich; Khasin, Kim Moiseevich; Frolov, Jury Fedorovich; Salmin, Valery Vasilievich; Lugovsky, Vladimir Ivanovich; Marjuschenko, Vilen Fedorovich; Shaburov, Fedor Fedorovich; Schelkunov, Jury Andreevich, deceased; and Schelkunova, Margarita Petrovna, administratrix, 4,061,180, Cl. 164-252.000.
Marks, Alfred F., to Diamond Shamrock Corporation. Flowable, aqueous pesticide compositions of improved activity. 4,061,770, Cl. 424-304.000.
Marks, Arnold, to Marks, Arnold; Marks, Judith A.; and Livingston, Harry E. Glove conditioning container. 4,061,170, Cl. 150-52.00R.
Marks, Judith A.: *See—*
Marks, Arnold, 4,061,170, Cl. 150-52.00R.
Marks, Paul D.: *See—*
Marks, Ronald H.; Marks, Paul D.; and Goodman, Lawrence R., 4,060,999, Cl. 66-125.00A.
Marks, Ronald H.; Marks, Paul D.; and Goodman, Lawrence R., to Enterprise Incorporated. Method and apparatus for forming yarn elements and producing products therefrom. 4,060,999, Cl. 66-125.00A.
Marlin Firearms Company, The: *See—*
Burns, Arthur H., Jr., 4,061,006, Cl. 72-34.000.
Marlor, Guy Anthony. Composition for preparation of a photoconductor surface for use in electrophotography. 4,061,599, Cl. 252-501.000.
Marsland, Peter John: *See—*
Hoffman, John Ronald; and Marsland, Peter John, 4,060,885, Cl. 29-407.000.
Martel, Jacques; Buendia, Jean; and Vivat, Michel, to Roussel Uclaf. Prostanoic acid derivatives and therapeutic compositions. 4,061,729, Cl. 424-305.000.
Martignoni, Pasquale: *See—*
Chew, William M.; Ayers, Orval E.; Murfree, James A.; and Martignoni, Pasquale, 4,061,512, Cl. 149-22.000.
Martin, Charles Andrew: *See—*
Klisch, Stephen Cajetan; and Martin, Charles Andrew, 4,061,586, Cl. 252-153.000.
Martin Marietta Corporation: *See—*
Wade, Jackie F., 4,061,425, Cl. 356-110.000.
Martin, Wayne. Process for reducing platelet adhesiveness. 4,061,738, Cl. 424-195.000.
Martino, Dom. Automatic variable-sound alarm clock. 4,060,973, Cl. 58-19.00R.
Martino, Joseph F., Jr.: *See—*
King, Gerard J.; and Martino, Joseph F., Jr., 4,061,916, Cl. 250-332.000.
Marubishi Yuka Kogyo Kabushiki Kaisha: *See—*
Nishizawa, Kazuo; Higashitsuji, Ken; and Mori, Yuji, 4,061,557, Cl. 204-277.000.
Marvin Glass & Associates: *See—*
Breslow, Jeffrey D., 4,061,335, Cl. 273-134.0AT.
Meyer, Burton C.; and Allen, Robert K., 4,060,929, Cl. 46-11.000.

Masaki, Kenji; and Nagaisi, Hatuo, to Nissan Motor Co., Ltd. Exhaust gas reburning device. 4,060,983, Cl. 60-282.000.
Masciarelli, Francis John, to Data General Corporation. Indicia validation system. 4,061,900, Cl. 235-437.000.
Massey-Ferguson Services N.V.: *See—*
Metcalfe, Edward Geoffrey; and Ward, Walter Henry, 4,061,359, Cl. 280-638.000.
Mateer, George C.: *See—*
United States of America, National Aeronautics and Space Administration; Mateer, George C.; and Brosh, Aviel, 4,061,029, Cl. 73-180.000.
Mathevet, Albert: *See—*
Boileau, Jacques; and Mathevet, Albert, 4,061,171, Cl. 152-352.00R.
Mathues, Thomas P., to General Motors Corporation. Wheel brake assembly. 4,061,429, Cl. 188-206.00A.
Matsui, Takashi, to Sekisui Kaseihin Kogyo Kabushiki Kaisha. Method of manufacturing a packaging container. 4,060,958, Cl. 53-37.000.
Matsumoto, Junichiro: *See—*
Iizuka, Haruhiko; Matsumoto, Junichiro; and Kato, Fumiaki, 4,061,055, Cl. 74-866.000.
Matsumoto, Kazuo: *See—*
Miyoshi, Munetsugu; Matsumoto, Kazuo; Urabe, Yuji; and Iwasaki, Tameo, 4,061,650, Cl. 260-307.00F.
Matsumoto, Mitsuo, to Tokyo Shibaura Electric Co., Ltd. Numerical control system. 4,061,953, Cl. 318-573.000.
Matsumoto, Shigeru, to Victor Company of Japan, Limited. Cassette tape recorder having impact absorbing mechanism for cover plate. 4,061,378, Cl. 312-20.000.
Matsushita Electric Industrial Co., Ltd.: *See—*
Hashimoto, Kiyoshi; and Kitamura, Shigeki, 4,061,938, Cl. 310-168.000.
Kawashima, Kazumi, 4,061,982, Cl. 325-464.000.
Ueno, Tomoki, 4,061,990, Cl. 333-10.000.
Matsushita Electric Works, Ltd.: *See—*
Kimura, Rokusaburo; and Horii, Sadashige, 4,060,972, Cl. 58-16.00D.
Nakamura, Yoshimitsu, 4,061,056, Cl. 76-104.00R.
Matsushita, Kunichi; Sakurada, Hikaru; and Onuma, Kazuhiko, to Mitsubishi Chemical Industries Ltd. Process for preparing titanium oxide shaped carrier. 4,061,596, Cl. 252-463.000.
Matsushita, Takeshi; Hayashi, Hisao; and Shibasaki, Mitsuru, to Sony Corporation. Semiconductor device having a hetero junction. 4,062,034, Cl. 357-16.000.
Matsuura, Haruo, to Kabushiki Kaisha Daisho. Cutter. 4,060,893, Cl. 30-310.000.
Matsuura, Kazuo: *See—*
Kuroda, Nobuyuki; Shiraishi, Takeichi; Itoh, Akio; Matsuura, Kazuo; and Miyoshi, Mituji, 4,061,857, Cl. 526-114.000.
Mattel, Inc.: *See—*
Hirtle, Michael O'Hara; and Morse, James Edward, 4,060,930, Cl. 46-81.000.
Matuo, Ryukichi: *See—*
Kobayashi, Yoshinari; Matuo, Ryukichi; and Nishiyama, Masashi, 4,061,567, Cl. 210-40.000.
Maul, James J.; and Pattison, Victor A., to Hooker Chemicals & Plastics Corporation. Liquid phase fluorination process. 4,061,688, Cl. 260-651.00F.
Mautner, Edward J. Decorative panel of wood strips having sections of varying thickness. 4,061,809, Cl. 428-50.000.
Max-Planck-Gesellschaft zur Forderung der Wissenschaften e.V.: *See—*
Hannig, Kurt; and Wirth, Hanns, 4,061,560, Cl. 204-299.00R.
Maxel, John M., to Armco Steel Corporation. Luggage shells and process for the manufacture thereof. 4,061,817, Cl. 428-246.000.
May, Brian E.: *See—*
Finigan, George D.; May, Brian E.; and Zaininger, Henry W., 4,060,916, Cl. 35-10.000.
May, George A.: *See—*
Collins, Galen R.; May, George A.; and Gendo, Indra Lee, 4,061,880, Cl. 179-15.0BA.
Mazarguil, Honore; Meiller, Francois; and Monsan, Pierre, to Rhone-Poulenc Industries. Modified, grafted mineral carriers. 4,061,828, Cl. 428-403.000.
McAllister, Ian R.: *See—*
Bennett, John A.; McAllister, Ian R.; and Welsh, Howard, 4,061,569, Cl. 210-83.000.
McBain, Robert T.; and Johnson, Bruce C., to Columbia Steel Casting Co. Inc. Drag chain. 4,060,978, Cl. 59-78.000.
McCanse, James Edson, to Hesston Corporation. Tractor mounted scraper blade. 4,061,194, Cl. 172-447.000.
McCaskey, Harold O., Jr.; and Palazzolo, Salvatore E., to Westinghouse Electric Corporation. Highly machinable cotton-phenolic base for decorative assemblies. 4,061,823, Cl. 428-318.000.
McClosky, Robert B.: *See—*
Hoffman, Louis S.; and McClosky, Robert B., 4,061,783, Cl. 426-87.000.
McCrickerd, John T. Odograph and heading indicator therefor. 4,061,995, Cl. 340-24.000.
McCulloch, Walter Graham, to Akzona Incorporated. Non-directional rectangular filaments and products. 4,061,804, Cl. 428-17.000.
McCullough, Robert E.: *See—*
O'Connor, Arthur H.; and McCullough, Robert E., 4,060,971, Cl. 58-4.00A.
McDaniel, Dwight W.: *See—*
Coleman, John R.; and McDaniel, Dwight W., 4,061,346, Cl. 277-205.000.
McDonald's Corporation: *See—*
Retelny, Andrew G., 4,061,241, Cl. 220-4.00B.
McDougald, Larry R., to Eli Lilly and Company. Coccidiocidal combination of monensin and metichlorpindol. 4,061,755, Cl. 424-263.000.
McElroy, David Joal, to Texas Instruments Incorporated. Correcting doping defects. 4,061,506, Cl. 148-1.500.
McFadden, Russell T.: *See—*
Gross, James R.; and McFadden, Russell T., 4,061,846, Cl. 526-16.000.
McFarland, Larry C.: *See—*
Johnson, Curtis D.; McFarland, Larry C.; and Antwiler, Lonnie D., 4,061,074, Cl. 89-33.0CA.
McGahren, William James: *See—*
Floyd, Middleton Brawner, Jr.; McGahren, William James; Schaub, Robert Eugene; and Weiss, Martin Joseph, 4,061,672, Cl. 260-514.00D.
McGauley, Patrick John. Process for the production of sorbent solids for use in the desulfurization of gases. 4,061,716, Cl. 423-244.000.
McGinnis, Hebert E., to First National Bank of Akron, Trustee, The. Stretchable belt conveyor. 4,061,223, Cl. 198-821.000.
McKeever, Bruce T.: *See—*
Sloane, Edwin A.; and McKeever, Bruce T., 4,061,017, Cl. 73-579.000.
McKinney, Joel Drexler; Sebulsky, Raynor T.; and Wynne, Francis Edmund, Jr., to Gulf Research & Development Company. Thermal cracking of hydrodesulfurized residual petroleum oils. 4,061,562, Cl. 208-61.000.
McLean, Daniel C.: *See—*
Shaler, Amos J.; and McLean, Daniel C., 4,061,807, Cl. 428-36.000.
McQue, David Wallace: *See—*
Dinsdale, Jack; McQue, David Wallace; and Vorley, Geoffrey, 4,061,952, Cl. 318-572.000.
Medovar, Boris Izrailevich: *See—*
Paton, Boris Evgenievich; Medovar, Boris Izrailevich; Baglai, Vitaly Mikhailovich; Latash, Jury Vadimovich; Emelyanenko, July Georgievich; Stupak, Leonid Mikhailovich; Alferov, Jury Fedorovich; Bondarenko, Oleg Petrovich; Schupak, Grigory Bentsionovich; Shuruev, Lev Andreevich; Khasin, Kim Moiseevich; Frolov, Jury Fedorovich; Salmin, Valery Vasilievich; Lugovsky, Vladimir Ivanovich; Marjuschenko, Vilen Fedorovich; Shaburov, Fedor Fedorovich; Schelkunov, Jury Andreevich, deceased; and Schelkunova, Margarita Petrovna, administratrix, 4,061,180, Cl. 164-252.000.
Meeks, Dwight S. Storm cushion. 4,060,852, Cl. 2-84.000.
Meen, Ronald H.: *See—*
Jones, Glenn C.; and Meen, Ronald H., 4,061,548, Cl. 204-78.000.
Mehlschau, James J.: *See—*
Fridley, Robert B.; Chen, Pictiaw; Mehlschau, James J.; and Claypool, Lawrence L., 4,061,020, Cl. 73-81.000.
Mehta, Nariman Bomanshaw; and Brieaddy, Lawrence Edward, to Burroughs Wellcome Co. 2-Carbalkoxy-2'-cycloalkylaminocarbonyldiphenyl sulfides. 4,061,863, Cl. 560-18.000.
Meier, Ernst: *See—*
Monbaliu, Marcel Jacob; Mannens, Marc Godfried; Van Poucke, Raphael Karel; Credner, Hans-Heinrich; and Meier, Ernst, 4,061,498, Cl. 96-100.00R.
Meijs, Franciscus H.; and Davies, David R., to Shell Oil Company. Method for gaseous sand consolidation treatment of weak gas sands. 4,061,191, Cl. 166-292.000.
Meiller, Francois: *See—*
Mazarguil, Honore; Meiller, Francois; and Monsan, Pierre, 4,061,828, Cl. 428-403.000.
Meinan Machinery Works, Inc.: *See—*
Hasegawa, Katsuji, 4,061,169, Cl. 144-213.000.
Meiners, Hans-Joachim: *See—*
Hubner, Hans; Blahak, Johannes; and Meiners, Hans-Joachim, 4,061,697, Cl. 260-944.000.
Meinerz, Bernard J.: *See—*
Goble, Ralph W., 4,060,956, Cl. 53-22.00R.
Mejia, Reynaldo. Centrifugal fan for circulating room air. 4,061,441, Cl. 416-175.000.
Meng, Karl: *See—*
Horstmann, Harald; Meng, Karl; and Wehinger, Egbert, 4,061,653, Cl. 548-360.000.
Mercik, Henry J., Jr.: *See—*
Goodfriend, Harvey J.; Mercik, Henry J., Jr.; and Armstrong, Lee R., 4,061,026, Cl. 73-116.000.
Merck & Co., Inc.: *See—*
Cragoe, Edward J., Jr.; and Bicking, John B., 4,061,643, Cl. 260-295.00R.
Dybas, Richard A.; Grier, Nathaniel; and Witzel, Bruce E., 4,061,775, Cl. 424-330.000.
Muir, Larry A.; and Barreto, Albert, 4,061,732, Cl. 424-117.000.
Shen, Tsung-Ying; Jones, Howard; and Dorn, Conrad P., 4,061,759, Cl. 424-263.000.
Shepard, Kenneth L.; and Paleveda, William J., Jr., 4,061,763, Cl. 424-274.000.
Merianos, John J.: *See—*
Lada, Arnold; Petrocci, Alfonso N.; Green, Harold A.; and Merianos, John J., 4,061,750, Cl. 424-249.000.
Merk, Wolfgang: *See—*
Schwarze, Werner; Merk, Wolfgang; and Binder, Volker, 4,061,869, Cl. 526-1.000.
Merriken, Lyal N.: *See—*
Harper, George S.; and Merriken, Lyal N., 4,062,052, Cl. 361-28.000.

Merrow, Jack Kenneth: *See—*
Moore, Arthur William; Volk, Herbert Franz; and Merrow, Jack Kenneth, 4,061,600, Cl. 252-510.000.
Mertes, Paul M. Moulded plastic drawer slide. 4,061,375, Cl. 308-3.600.
Meshberg, Philip. Method of and apparatus for controlling of travel of the plunger in a dispensing pump chamber. 4,061,247, Cl. 222-1.000.
Messer Griesheim GmbH: *See—*
Gillitzer, Max; and Tajbl, Franz, 4,061,499, Cl. 219-131.00R.
Messler, James P.: *See—*
Messler, Joseph P.; Messler, Thomas E.; and Messler, James P., 4,060,928, Cl. 43-43.160.
Messler, Joseph P.; Messler, Thomas E.; and Messler, James P. Fish hook. 4,060,928, Cl. 43-43.160.
Messler, Thomas E.: *See—*
Messler, Joseph P.; Messler, Thomas E.; and Messler, James P., 4,060,928, Cl. 43-43.160.
Metallgesellschaft Aktiengesellschaft: *See—*
Moller, Friedrich-Wilhelm; Bratzler, Karl; and Muller, Wolf-Dieter, 4,061,475, Cl. 48-197.00R.
Metallurgie Hoboken-Overpelt: *See—*
De Schepper, Achille; and Van Peteghem, Antoine, 4,061,564. Cl. 210-21.000.
Metcalfe, Edward Geoffrey; and Ward, Walter Henry, to Massey-Ferguson Services N.V. Vehicles. 4,061,359, Cl. 280-638.000.
Meyer, Burton C.; and Allen, Robert K., to Marvin Glass & Associates. Toy detective set. 4,060,929, Cl. 46-11.000.
Michel, Max; and Poisson, Regis, to Rhone-Poulenc Industries. Alumina-based bodies obtained by agglomeration which are resistant to elevated temperatures. 4,061,594, Cl. 252-462.000.
Midcon Pipeline Equipment Co.: *See—*
Birdwell, J. C., 4,061,231, Cl. 214-1.00P.
Midgley, Richard John: *See—*
Selman, Gordon Leslie; and Midgley, Richard John, 4,061,495, Cl. 75-134.00F.
Mielke, Johannes: *See—*
Bantien, Jurgen; Bardenhagen, Dietrich; Mielke, Johannes; and Kruse, Friedel, 4,061,234, Cl. 214-6.00M.
Mietens, Gerhard: *See—*
Schallus, Erich; Mietens, Gerhard; Fucker, Gregor; Petrell, Jurgen; and Dorn, Friedrich Wilhelm, 4,061,719, Cl. 423-445.000.
Miida, Noboru: *See—*
Yokokawa, Takao; Kanazawa, Shogo; Otoguro, Yasuo; Suzuki, Nobukazu; Akase, Sigeyuki; Miida, Noboru; Akazawa, Tadahisa; and Kuroiwa, Kazuya, 4,061,494, Cl. 75-124.000.
Miksitz, Frank J., to UFI Engineering & Manufacturing Co., Inc. Controlled feeding of powders to conveying systems and process. 4,061,246, Cl. 222-1.000.
Miles Laboratories, Inc.: *See—*
Boyer, Ernest Wendell; and Ingle, Morton Blakeman, 4,061,541, Cl. 195-66.00R.
Havera, Herbert John; and Strycker, Wallace Glenn, 4,061,760, Cl. 424-267.000.
Miller, Carl W.; Vandenberg, Lester C.; and Statt, Wayne H., to Dow Corning Corporation. Manufacturing textured gloves of silicone rubber. 4,061,709, Cl. 264-293.000.
Miller, David D., to American Safety Equipment Corporation. Inflatable life vest. 4,060,867, Cl. 9-313.000.
Miller, Don W.; and Gerber, Mark S., to Ohio State University, The. Gamma camera system. 4,061,919, Cl. 250-363.00S.
Miller, Larry J.; Miller, Marion V.; and Liebetrau, Richard E., to Swiss Aluminium Limited. Revolving door with security locking mechanism. 4,060,935, Cl. 49-25.000.
Miller, Marilyn: *See—*
Morgan, Kenneth A.; and Miller, Marilyn, 4,061,712, Cl. 423-67.000.
Miller, Marion V.: *See—*
Miller, Larry J.; Miller, Marion V.; and Liebetrau, Richard E., 4,060,935, Cl. 49-25.000.
Milliken Research Corporation: *See—*
Tolan, John R., 4,061,524, Cl. 156-397.000.
Milne, James, to Balfour, Beatty & Company Limited. Artificial and natural structures. 4,060,953, Cl. 52-743.000.
Mimmack, William E.: *See—*
Kaprelian, Edward K.; and Mimmack, William E., 4,061,420, Cl. 350-199.000.
Minami, Norio: *See—*
Kijima, Shizumasa; Yamatsu, Isao; Minami, Norio; and Inai, Yuichi, 4,061,660, Cl. 260-396.00R.
Minhas, Pritam Singh; and Sukornick, Bernard, to Allied Chemical Corporation. Flame-retardant carpet and composition for preparing the same. 4,061,810, Cl. 428-85.000.
Minister of Defense, Canadian Government: *See—*
Hamid, Michael A.; and Rowlandson, Lyall G., 4,061,991, Cl. 333-22.00R.
Minks, Werner, to International Standard Electric Corporation. Miniature relay with bearing supports associated with the housing. 4,061,994, Cl. 335-202.000.
Minnesota Mining and Manufacturing Company: *See—*
Bast, Kenneth D.; and Kennelly, Jerauld M., 4,061,408, Cl. 339-75.00R.
DeMaster, Robert D., 4,061,268, Cl. 238-14.000.
Hampl, Edward F., Jr., 4,061,505, Cl. 136-238.000.
Nohtomi, Ryota; Sugiyama, Masayoshi; and Shigeyoshi, Tuyoshi, 4,061,707, Cl. 264-95.000.
Petras, Raymond J.; and Groff, Gaylord L., 4,061,826, Cl. 428-356.000.
Schultz, William J.; and Smith, Samuel, 4,061,624, Cl. 260-79.30M.
Minolta Camera Kabushiki Kaisha: *See—*
Kobori, Toshio; Tsujimoto, Kayoshi; Nanba, Yasuhiro; and Yamada, Seiji, 4,062,023, Cl. 354-38.000.
Minter, Jerry B. Apparatus for handling connectors. 4,061,405, Cl. 339-17.00M.
Misawa, Toshihiko: *See—*
Fujimoto, Sakae; Sue, Takaji; and Misawa, Toshihiko, 4,061,328, Cl. 271-10.000.
Mitsubishi Chemical Industries Ltd.: *See—*
Kikumoto, Ryoji; Tobe, Akihiro; and Ikoma, Hidenobu, 4,061,776, Cl. 424-330.000.
Matsushita, Kunichi; Sakurada, Hikaru; and Onuma, Kazuhiko, 4,061,596, Cl. 252-463.000.
Onoda, Takeru; and Otake, Masayuki, 4,061,673, Cl. 260-526.00N.
Mitsubishi Jidosha Kogyo Kabushiki Kaisha: *See—*
Kiyota, Yuhiko, 4,061,118, Cl. 123-119.0LR.
Mitsui, Isamu: *See—*
Inagami, Kaoru; Mitsui, Isamu; Nakamura, Chomatsu; and Nozaka, Toru, 4,061,792, Cl. 426-330.200.
Mitsui Mining & Smelting Co., Ltd.: *See—*
Kitamura, Tatsuzo; and Inaba, Haruji, 4,061,559, Cl. 204-106.000.
Mitumori, Yoshio: *See—*
Shigemori, Youjiro; Mitumori, Yoshio; and Yonezawa, Toshiaki, 4,062,050, Cl. 360-30.000.
Miura, Yoshio; Kobayashi, Kazuhiro; and Kotera, Masao, to Hitachi, Ltd. Winding machine for electric inductive apparatus. 4,061,289, Cl. 242-7.130.
Miyatani, Kazuo; and Sato, Isao, to RCA Corporation. Water photolysis apparatus. 4,061,555, Cl. 204-242.000.
Miyauchi, Kazunori: *See—*
Yamasaki, Akitosi; Fukuyama, Kiyoshi; and Miyauchi, Kazunori, 4,061,311, Cl. 254-168.000.
Miyazaki, Gentaro: *See—*
Hanma, Kentaro; and Miyazaki, Gentaro, 4,062,044, Cl. 358-21.000.
Miyazaki, Kazuo; and Ohmori, Sachio, to Nippon Kogaku K.K. Data exposure device for camera. 4,062,027, Cl. 354-127.000.
Miyoshi, Mituji: *See—*
Kuroda, Nobuyuki; Shiraishi, Takeichi; Itoh, Akio; Matsuura, Kazuo; and Miyoshi, Mituji, 4,061,857, Cl. 526-114.000.
Miyoshi, Munetsugu; Matsumoto, Kazuo; Urabe, Yuji; and Iwasaki, Tameo, to Tanabe Seiyaku Co., Ltd. 5-Trihalogenomethyl-4,5-dihyro-oxazole-4-carboxylic acid esters. 4,061,650, Cl. 260-307.00F.
Mizusawa, Kiyoshi: *See—*
Yoshida, Fumihiko; Mizusawa, Kiyoshi; and Nakamura, Kazuo, 4,061,540, Cl. 195-62.000.
Mizushina, Youichi, to Kokusai Electric Co., Ltd. Temperature control system. 4,061,870, Cl. 13-24.000.
Mobil Oil Corporation: *See—*
Kerr, George T.; and Rollmann, Louis D., 4,061,717, Cl. 423-329.000.
Nelson, Earnest E., 4,061,965, Cl. 324-29.000.
Mod, Robert R.; Magne, Frank C.; Sumrell, Gene; and Novak, Arthur F., to United States of America, Agriculture. Sulfur-containing antimicrobial ester-amides. 4,061,634, Cl. 544-158.000.
Modell, Michael, to Arthur D. Little, Inc. Process using a supercritical fluid for regenerating synthetic organic polymeric adsorbents and wastewater treatment embodying the same. 4,061,566, Cl. 210-32.000.
Moebius, Kurt O. Lockring tube joint. 4,061,367, Cl. 285-382.200.
Moertel, George B., to Textron Inc. Method and apparatus for manufacture of slide fastener stringer. 4,060,886, Cl. 29-410.000.
Mohr, Reinhard: *See—*
Fleckenstein, Erwin; Heinrich, Ernst; and Mohr, Reinhard, 4,061,642, Cl. 260-295.50A.
Mollendorf, Ralf; and Lux, Peter, to U.S. Philips Corporation. X-ray installation comprising an image intensifier/image pick-up tube system and an automatic X-ray exposure device. 4,061,920, Cl. 250-413.000.
Moller, Friedrich-Wilhelm; Bratzler, Karl; and Muller, Wolf-Dieter, to Metallgesellschaft Aktiengesellschaft. Process for producing a gas which can be substituted for natural gas. 4,061,475, Cl. 48-197.00R.
Monbaliu, Marcel Jacob; Mannens, Marc Godfried; Van Poucke, Raphael Karel; Credner, Hans-Heinrich; and Meier, Ernst, to AGFA-Gevaert, N.V. Photographic material containing 2-acyl-2-pyrazolin-5-on-couplers. 4,061,498, Cl. 96-100.00R.
Moncrieff-Yeates, Alexander J. Vortical flowaerothermodynamic heat exchanger. 4,061,189, Cl. 165-168.000.
Monsan, Pierre: *See—*
Mazarguil, Honore; Meiller, Francois; and Monsan, Pierre, 4,061,828, Cl. 428-403.000.
Monsanto Company: *See—*
Schleppnik, Alfred A., 4,061,667, Cl. 560-261.000.
Singleton, Thomas C., 4,061,546, Cl. 203-31.000.
Montblanc-Simplo GmbH.: *See—*
Herrnring, Heinz Gunther, 4,061,430, Cl. 401-216.000.
Montedison S.p.A.: *See—*
Fumagalli, Carlo; Caprara, Giuseppe; and Roffia, Paolo, 4,061,868, Cl. 560-246.000.
Giannarelli, Giancarlo; and Movilli, Walter, 4,061,462, Cl. 425-464.000.
Montgomery, James R.; and Saczawa, John S., Jr., to General Motors Corporation. Bumper having pivotal load spreader plate for deflecting energy absorbing medium. 4,061,384, Cl. 293-71.00R.
Moore, Arthur William; Volk, Herbert Franz; and Merrow, Jack Kenneth, to Union Carbide Corporation. Graphite electrode and method of making. 4,061,600, Cl. 252-510.000.

Moore Business Forms, Inc.: *See—*
Traise, John E., 4,061,527, Cl. 156-519.000.
Moore, Earl P., Jr., to Du Pont de Nemours, E. I., and Company. Catalyst composition of an azo nitrile mixture in an organic solvent. 4,061,590, Cl. 252-426.000.
Moore, Robert Rockwell: *See—*
Eitzen, Vincent Elliott; and Moore, Robert Rockwell, 4,061,315, Cl. 366-111.000.
Moreau, Marc, to Trefimetaux. Method for continuously measuring the annealing level on wires or strips. 4,061,508, Cl. 148-128.000.
Morgan, Kenneth A.; and Frame, Robert R., to UOP Inc. Recovery of vanadium values. 4,061,711, Cl. 423-67.000.
Morgan, Kenneth A.; and Miller, Marilyn, to UOP Inc. Recovery of vanadium values. 4,061,712, Cl. 423-67.000.
Mori, Yuji: *See—*
Nishizawa, Kazuo; Higashitsuji, Ken; and Mori, Yuji, 4,061,557, Cl. 204-277.000.
Morimura, Syoji: *See—*
Murayama, Keisuke; Morimura, Syoji; Yoshioka, Takao; and Kurumada, Tomoyuki, 4,061,616, Cl. 260-45.80N.
Moriya, Yoshiaki: *See—*
Suzuki, Seigo; and Moriya, Yoshiaki, 4,062,059, Cl. 364-200.000.
Morley Company, The: *See—*
Olbres, Anthony, 4,061,227, Cl. 206-454.000.
Morris, Kent C.; Bonsen, Pieter; and Laver, Myron B., to Alza Corporation. Pharmaceutically acceptable intramolecularly cross-linked, stromal-free hemoglobin. 4,061,736, Cl. 424-177.000.
Morrison, Glenn C.: *See—*
Wise, Lawrence D.; and Morrison, Glenn C., 4,061.636, Cl. 260-250.00P.
Morrow, William D.: *See—*
Goss, John B.; Morrow, William D.; and Corbett, Jack William, 4,061,230, Cl. 212-70.000.
Morse, James Edward: *See—*
Hirtle, Michael O'Hara; and Morse, James Edward, 4,060,930, Cl. 46-81.000.
Morse Safety Products Co.: *See—*
Glazer, Joseph, 4,060,937, Cl. 51-80.00A.
Moschovis, Elias P.; and Gilson, John L., to A. B. Dick Company. Resinous pigment toner and liquid developer containing polyvinyl acetate coated on the pigment. 4,061,582, Cl. 252-62.10L.
Mostek Corporation: *See—*
Callahan, Michael James, Jr.; and Hoffman, Gordon Bates, 4,061,886, Cl. 179-84.0VF.
Donnelly, Robert Murray, 4,062,000, Cl. 365-203.000.
Proebsting, Robert J.; and Schroeder, Paul R., 4,061,954, Cl. 320-1.000.
Proebsting, Robert J.; and Schroeder, Paul R., 4,061,999, Cl. 365-182.000.
Schroeder, Paul R.; and Proebsting, Robert J., 4,061,933, Cl. 307-262.000.
Motch and Merryweather Machinery Company, The: *See—*
Nowak, Robert H., 4,060,880, Cl. 407-61.000.
Moteurs Leroy-Somer: *See—*
Peltier, Francois, 4,061,062, Cl. 82-2.700.
Motley, David M.; and Kameya, Andrew M., to Hycom Incorporated. Phase tracking network. 4,061,977, Cl. 325-323.000.
Motley, David M.; Salman, Naif D.; and Cheng, King Y., to Hycom Incorporated. Timing recovery for an automatically equalized data modem. 4,061,978, Cl. 325-324.000.
Motorola, Inc.: *See—*
Nash, Harold Garth; and Whitmore, Jack, 4,061,885, Cl. 179-84.0VF.
Reimers, Fred Alan; Beckmann, Robert Martin; Burzynski, William Arthur; Tomlinson, Dennis Eugene; and Schwartz, William Henry, 4,061,973, Cl. 325-17.000.
Movilli, Walter: *See—*
Giannarelli, Giancarlo; and Movilli, Walter, 4,061,462, Cl. 425-464.000.
Mueller, Herold. Multiple-blade band saw. 4,061,066, Cl. 83-808.000.
Muenster, Alfred, to BASF Aktiengesellschaft. Process for the recovery of gaseous or vaporous monomers from reaction off-gases. 4,061,849, Cl. 526-68.000.
Muhlfeld, Frank J. Conversion kit for a sailboat. 4,061,100, Cl. 114-43.000.
Muir, Larry A.; and Barreto, Albert, to Merck & Co., Inc. Control of lactic acidosis in ruminants. 4,061,732, Cl. 424-117.000.
Mulder, Franciscus Elbertus, to Proost en Brandt N.V. Extruder for the manufacture of a synthetic resin foil in the shape of a serpentine strip. 4,061,456, Cl. 425-140.000.
Muller, Jurgen: *See—*
Pfeifer, Josef; Rheude, Alfred; and Muller, Jurgen, 4,061,915, Cl. 250-315.00A.
Muller, Ulrich R.: *See—*
Fricke, J. P.; and Muller, Ulrich R., 4,061,874, Cl. 179-1.00P.
Muller, Wolf-Dieter: *See—*
Moller, Friedrich-Wilhelm; Bratzler, Karl; and Muller, Wolf-Dieter, 4,061,475, Cl. 48-197.00R.
Mundus, Friedhelm; and Schneider, Horst, to Windmoller & Holscher. Apparatus for processing a web of material without a standstill. 4,061,458, Cl. 425-392.000.
Mune, Takashi: *See—*
Horie, Koji; and Mune, Takashi, 4,061,098, Cl. 113-116.00Q.
Mura, Lawrence A.: *See—*
Tai, Wun Ten; Mura, Lawrence A.; Phillips, Kenneth G.; and Ballweber, Edward G., 4,061,695, Cl. 260-929.000.
Murakami, Heiichiro; and Okamoto, Tsuneo, to Taiyo Kaken Company, Ltd. Method and apparatus for the purification of waste gas containing gaseous pollutants. 4,061,477, Cl. 55-79.000.
Murakami, Hiroyashu; Ito, Tadashi; Ito, Fumio; Sakurada, Nobuaki; Kawamura, Mashaharu; and Shinoda, Nobuhiko, to Canon Kabushiki Kaisha. Device for preventing erroneous handling of a camera. 4,062,022, Cl. 354-38.000.
Murata Manufacturing Co., Ltd.: *See—*
Murata, Michihiro; and Kitao, Akihiro, 4,061,583, Cl. 252-62.3BT.
Murata, Masahiro, to Hope Co. Ltd. Ski boot toe binding. 4,061,358, Cl. 280-629.000.
Murata, Michihiro; and Kitao, Akihiro, to Murata Manufacturing Co., Ltd. Preparation of titanates. 4,061,583, Cl. 252-62.3BT.
Murayama, Keisuke; Morimura, Syoji; Yoshioka, Takao; and Kurumada, Tomoyuki, to Sankyo Company Limited. Stabilization of synthetic polymers. 4,061,616, Cl. 260-45.80N.
Murayama, Keiya: *See—*
Tsunekawa, Tokuichi; Uchidoi, Masanori; Shimizu, Masami; Yamamichi, Masayoshi; Murayama, Keiya; and Aizawa, Hiroshi, 4,062,024, Cl. 354-60.00R.
Murfree, James A.: *See—*
Chew, William M.; Ayers, Orval E.; Murfree, James A.; and Martignoni, Pasquale, 4,061,512, Cl. 149-22.000.
Murie, Richard A.: *See—*
Sharma, Ram A.; Wright, Walter J.; and Murie, Richard A., 4,061,841, Cl. 429-112.000.
Murray, John S.; and Sunjara, Sime, to Redken Laboratories, Inc. Heat cap. 4,061,898, Cl. 219-211.000.
Muschaweck, Roman: *See—*
Lang, Hans-Jochen; and Muschaweck, Roman, 4,061,647, Cl. 260-306.70T.
Lang, Hans-Jochen; and Muschaweck, Roman, 4,061,761, Cl. 424-270.000.
Muschelknautz, Edgar: *See—*
Brauner, Dieter; Kaluza, Hans-Joachim; and Muschelknautz, Edgar, 4,061,313, Cl. 366-340.000.
Musial, George J. Valve with combination lock and remote control. 4,061,158, Cl. 137-552.500.
Musil, Josef: *See—*
Teufel, Hermann; Bartmann, Wilhelm; Granzer, Ernold; and Musil, Josef, 4,061,772, Cl. 424-304.000.
Musser, Malcolm E. Checkout assembly having dual bagging station. 4,061,205, Cl. 186-1.00A.
N. V. Joseph Mertens International: *See—*
Goyvaerts, Edward C., 4,061,091, Cl. 108-84.000.
N. V. Raychem S.A.: *See—*
De Groef, Pierre, 4,060,887, Cl. 29-626.000.
Nabisco, Inc.: *See—*
Pinto, Albert A.; and Stanley, Alexander J., 4,061,081, Cl. 93-53.0SD.
Nadelson, Jeffrey, to Sandoz, Inc. Iminodimethylene di-tert-alkylophenones and phenols. 4,061,778, Cl. 424-330.000.
Nagahama, Yasuo, to Nippon Gakki Seizo Kabushiki Kaisha. Voltage-controlled type oscillator. 4,061,987, Cl. 331-111.000.
Nagahama, Yasuo, to Nippon Gakki Seizo Kabushiki Kaisha. Non-linear type digital-to-analog converter. 4,062,013, Cl. 340-347.0DA.
Nagaisi, Hatuo: *See—*
Masaki, Kenji; and Nagaisi, Hatuo, 4,060,983, Cl. 60-282.000.
Nagano, Toshio; and Kuramoto, Kazuo, to Nissan Motor Co., Ltd. Safety system for protection of automotive seat occupant. 4,061,365, Cl. 280-745.000.
Nagaoka, Kenji: *See—*
Itoh, Iko; Inoue, Yasuhiko; and Nagaoka, Kenji, 4,061,844, Cl. 526-4.000.
Nagaoka, Shinji: *See—*
Kitai, Kiyoshi; Nakamura, Yukio; Kato, Shogo; and Nagaoka, Shinji, 4,062,029, Cl. 354-232.000.
Nagatome, Kenji: *See—*
Toyota, Hiroshi; Nagatome, Kenji; and Kawamoto, Tamio, 4,061,217, Cl. 192-.052.
Nagle, William J.: *See—*
Thomas, Ralph D.; and Nagle, William J., 4,061,955, Cl. 320-6.000.
Naka, Hiromitsu. Flexible non-skid strip with reinforcing web member. 4,060,947, Cl. 52-179.000.
Nakagawa, Jihei, to Olympus Optical Co., Ltd. Retrofocus type lens system having ultra-wide angle of view. 4,061,421, Cl. 350-214.000.
Nakagawa, Koithiro: *See—*
Yoshida, Toru; Hosoi, Kameo; Yoshida, Tokuzo; Shimizu, Kazuyuki; and Nakagawa, Koithiro, 4,060,913, Cl. 34-80.000.
Nakagome, Takenari: *See—*
Yamada, Hirotada; Okamura, Kosaku; Tobiki, Hisao; Tanno, Norihiko; Shimago, Kozo; Nakagome, Takenari; Komatsu, Toshiaki; Izawa, Akio; Noguchi, Hiroshi; Irie, Kenji; and Eda, Yasuko, 4,061,748, Cl. 424-246.000.
Nakamura, Chomatsu: *See—*
Inagami, Kaoru; Mitsui, Isamu; Nakamura, Chomatsu; and Nozaka, Toru, 4,061,792, Cl. 426-330.200.
Nakamura, Kazuo: *See—*
Yoshida, Fumihiko; Mizusawa, Kiyoshi; and Nakamura, Kazuo, 4,061,540, Cl. 195-62.000.
Nakamura, Masaji: *See—*
Amano, Tadashi; and Nakamura, Masaji, 4,061,428, Cl. 356-175.000.
Nakamura, Yoshimitsu, to Matsushita Electric Works, Ltd. Method of making outer blades for electric shavers. 4,061,056, Cl. 76-104.00R.

Nakamura, Yukio: *See—*
Kitai, Kiyoshi; Nakamura, Yukio; Kato, Shogo; and Nagaoka, Shinji, 4,062,029, Cl. 354-232.000.
Nalco Chemical Company: *See—*
Tai, Wun Ten; Mura, Lawrence A.; Phillips, Kenneth G.; and Ballweber, Edward G., 4,061,695, Cl. 260-929.000.
Nanba, Yasuhiro: *See—*
Kobori, Toshio; Tsujimoto, Kayoshi; Nanba, Yasuhiro; and Yamada, Seiji, 4,062,023, Cl. 354-38.000.
Narisada, Masayuki, to Shionogi & Co., Ltd. Dihydroethanoanthracene derivatives useful as antidepressants. 4,061,854, Cl. 544-88.000.
Nash, Harold Garth; and Whitmore, Jack, to Motorola, Inc. Digital tone decoder. 4,061,885, Cl. 179-84.0VF.
National Can Corporation: *See—*
Wessman, Elbert F., 4,061,012, Cl. 72-347.000.
National Gypsum Company: *See—*
Rackard, Troy D.; and Snider, Grover E., 4,060,950, Cl. 52-456.000.
National Research Development Corporation: *See—*
Edwards, Nigel, 4,060,856, Cl. 3-1.300.
New, Ronald William, 4,061,438, Cl. 408-143.000.
National Starch and Chemical Corporation: *See—*
Stanley, Henry; and Ray-Chaudhuri, Dilip K., 4,061,618, Cl. 260-29.2TN.
Natori, Minoru; Hatuse, Toshikazu; Kawanobe, Kouhei; Ogawa, Hiroshi; Sekiya, Fukuo; Ebihara, Heihachiro; and Uchino, Misao, to Citizen Watch Company Limited. Method and apparatus for driving electrochromic display device. 4,060,974, Cl. 58-23.00R.
Naturin-Werk Becker & Co.: *See—*
Winkler, Bruno; Mangei, Bernd; and Fritz, Dieter, 4,061,786, Cl. 426-138.000.
Neilson, John Manning Savidge, to RCA Corporation. Gate turn off semiconductor rectifiers. 4,062,032, Cl. 357-13.000.
Nelson, Earnest E., to Mobil Oil Corporation. Method and apparatus for monitoring a cathodically protected corrodible hollow member. 4,061,965, Cl. 324-29.000.
Nelson, Rodney L., to Baughman, Ray M., a part interest. Mining method and apparatus. 4,061,399, Cl. 299-18.000.
Nerem, Arne, to Rohr Industries, Incorporated. Base drive inhibit circuit. 4,061,930, Cl. 307-254.000.
New, Ronald William, to National Research Development Corporation. Boring bars. 4,061,438, Cl. 408-143.000.
Newhouse, Thomas Charles, to Deere & Company. Pulley half mounting of variable speed pulley. 4,061,047, Cl. 74-230.17C.
Newland, Julian Harold: *See—*
Lazarus, Stanley David; and Newland, Julian Harold, 4,061,708, Cl. 264-211.000.
Newman, William Albert: *See—*
Brown, Lowell K.; Newman, William Albert; and Boyd, William A., 4,061,956, Cl. 320-22.000.
Newspaper Equipment Company: *See—*
Hill, George B., 4,061,087, Cl. 101-415.100.
Nichiyu Kagaku Co., Ltd.: *See—*
Yoshida, Moritoshi; Yamamoto, Takashi; and Nii, Sumito, 4,061,780, Cl. 424-358.000.
Nicks, Oran W. Aircraft total energy sensor. 4,061,028, Cl. 73-179.000.
Nielsen, Robert P.; and Kilty, Peter A., to Shell Oil Company. Process for the production of ethylene oxide. 4,061,659, Cl. 260-348.340.
Niethammer, Dieter; and Paetsch, Werner, to Siemens Aktiengesellschaft. Circuit arrangement for the reception of data. 4,061,997, Cl. 340-146.1AX.
Nifco Inc.: *See—*
Kurosaki, Mutsuo, 4,061,299, Cl. 248-73.000.
Nii, Sumito: *See—*
Yoshida, Moritoshi; Yamamoto, Takashi; and Nii, Sumito, 4,061,780, Cl. 424-358.000.
Nikitina, Ljudmila Nikolaevna: *See—*
Ivanova, Raisa Vasilievna; Belsky, Arkady Andreevich; Novikov, Nikolai Alexandrovich; Alexeeva, Nina Nikolaevna; Nikitina, Ljudmila Nikolaevna; Ljubimova, Nina Andreevna; and Dotsenko, Anna Evgenievna, 4,061,551, Cl. 204-105.00R.
Nilson, Billy N., to KeNova AB. Dispensing valve. 4,061,254, Cl. 222-494.000.
Nippon Electric Company, Ltd.: *See—*
Okamoto, Kiyokazu; and Hayashi, Hitoshi, 4,061,907, Cl. 364-718.000.
Nippon Gakki Seizo Kabushiki Kaisha: *See—*
Nagahama, Yasuo, 4,061,987, Cl. 331-111.000.
Nagahama, Yasuo, 4,062,013, Cl. 340-347.0DA.
Yoshida, Takashi, 4,062,036, Cl. 357-22.000.
Nippon Kogaku K.K.: *See—*
Miyazaki, Kazuo; and Ohmori, Sachio, 4,062,027, Cl. 354-127.000.
Toyoda, Kenji, 4,061,431, Cl. 356-227.000.
Nippon Kokan Kabushiki Kaisha: *See—*
Nomura, Hirokazu; Tohno, Katsumi; and Takahashi, Tomio, 4,061,262, Cl. 228-50.000.
Nippon Mining Co., Ltd.: *See—*
Ozaki, Hiromi; Yamane, Mamoru; Kodama, Hachio; and Yoshika, Haruo, 4,061,472, Cl. 44-1.00R.
Nippon Oil Company Ltd.: *See—*
Kuroda, Nobuyuki; Shiraishi, Takeichi; Itoh, Akio; Matsuura, Kazuo; and Miyoshi, Mituji, 4,061,857, Cl. 526-114.000.
Nippon Piston Ring Kabushiki Kaisha: *See—*
Sakamaki, Hiroshi; Maeda, Toshiyuki; Sakai, Toshimitsu; and Saitou, Tadashi, 4,061,446, Cl. 418-133.000.
Nippon Soken, Inc.: *See—*
Kuno, Akira; and Shinoda, Yoshio, 4,061,023, Cl. 73-114.000.
Nippon Steel Corporation: *See—*
Sugai, Tetuya, 4,061,975, Cl. 325-322.000.
Sugai, Tetuya, 4,061,976, Cl. 325-322.000.
Yokokawa, Takao; Kanazawa, Shogo; Otoguro, Yasuo; Suzuki, Nobukazu; Akase, Sigeyuki; Miida, Noboru; Akazawa, Tadahisa; and Kuroiwa, Kazuya, 4,061,494, Cl. 75-124.000.
Yoshida, Toru; Hosoi, Kameo; Yoshida, Tokuzo; Shimizu, Kazuyuki; and Nakagawa, Koithiro, 4,060,913, Cl. 34-80.000.
Nippon Zeon Co. Ltd.: *See—*
Kamiya, Shigemitsu, 4,061,693, Cl. 260-876.00R.
Nishikawa, Tatsuo; and Ozawa, Toshiaki, to Canon Kabushiki Kaisha. Printing device. 4,061,219, Cl. 197-164.000.
Nishimura, Izuhiko, to Kabushiki Kaisha Suwa Seikosha. Semi-conductor integrated circuit. 4,062,039, Cl. 357-51.000.
Nishino, Tetsuya; and Yasuda, Shigeyuki. Method and device for preserving vegetables. 4,061,785, Cl. 426-124.000.
Nishiumi, Shiro: *See—*
Takase, Hideo; Ishii, Toyota; and Nishiumi, Shiro, 4,061,811, Cl. 428-95.000.
Nishiyama, Masashi: *See—*
Kobayashi, Yoshinari; Matuo, Ryukichi; and Nishiyama, Masashi, 4,061,567, Cl. 210-40.000.
Nishiyama, Yukinori, to Sumitomo Electric Industries, Ltd. Pad-wear compensating device for disc brake. 4,061,208, Cl. 188-71.900.
Nishizawa, Kazuo; Higashitsuji, Ken; and Mori, Yuji, to Marubishi Yuka Kogyo Kabushiki Kaisha; and Nishizawa, Kazuo. Assembly of electrodes. 4,061,557, Cl. 204-277.000.
Nissan Motor Co., Ltd.: *See—*
Hoshino, Kazuo; and Tanbara, Masakazu, 4,061,211, Cl. 188-79.50P.
Iizuka, Haruhiko; Matsumoto, Junichiro; and Kato, Fumiaki, 4,061,055, Cl. 74-866.000.
Ikeura, Kenji, 4,061,117, Cl. 123-119.0EC.
Masaki, Kenji; and Nagaisi, Hatuo, 4,060,983, Cl. 60-282.000.
Nagano, Toshio; and Kuramoto, Kazuo, 4,061,365, Cl. 280-745.000.
Saida, Yoshinori; and Katoh, Kazumasa, 4,061,116, Cl. 123-117.00D.
Toyota, Hiroshi; Nagatome, Kenji; and Kawamoto, Tamio, 4,061,217, Cl. 192-.052.
Nixon, Peter Anthony, to Development Finance Corporation. Temperature function integrator. 4,061,033, Cl. 73-339.00R.
Noel, Jean Pierre; and Bauer, Gilbert, to Ste Anonyme Dite Brasseries Kron Enbourg. Method and apparatus for measuring the foam life on an effervescent beverage. 4,061,016, Cl. 73-60.100.
Noguchi, Hiroshi: *See—*
Yamada, Hirotada; Okamura, Kosaku; Tobiki, Hisao; Tanno, Norihiko; Shimago, Kozo; Nakagome, Takenari; Komatsu, Toshiaki; Izawa, Akio; Noguchi, Hiroshi; Irie, Kenji; and Eda, Yasuko, 4,061,748, Cl. 424-246.000.
Nohtomi, Ryota; Sugiyama, Masayoshi; and Shigeyoshi, Tuyoshi, to Minnesota Mining and Manufacturing Company. Process and apparatus for heat setting biaxially oriented tubular polyethylene terephthalate films. 4,061,707, Cl. 264-95.000.
Nolan, John Howard; Goddard, Donald Lawrence; and Short, Barrett John, to Babcock & Wilcox Company, The. Industrial technique. 4,061,535, Cl. 176-38.000.
Nomura, Hirokazu; Tohno, Katsumi; and Takahashi, Tomio, to Nippon Kokan Kabushiki Kaisha. Self-running one-side welding facilities. 4,061,262, Cl. 228-50.000.
Nordstrom, Sigurd Andrew Mauritz, to Saab-Scania Aktiebolag. Bearing arrangement for non-powered wheels on vehicles. 4,061,377, Cl. 308-207.00R.
Noritsu Koki Co., Ltd.: *See—*
Onishi, Tetsuo, 4,061,424, Cl. 355-63.000.
Norris, Robert S. Process to embody waste automotive lubricating oils into a fuel additive to reduce corrosion and deposits and augment energy availability. 4,061,473, Cl. 44-51.000.
Northern Telecom Limited: *See—*
Gumb, Beverley William; Kuhfus, Gerd; and Cogan, Fredrick Thomas, 4,061,411, Cl. 339-159.00R.
Novak, Arthur F.: *See—*
Mod, Robert R.; Magne, Frank C.; Sumrell, Gene; and Novak, Arthur F., 4,061,634, Cl. 544-158.000.
Novikov, Nikolai Alexandrovich: *See—*
Ivanova, Raisa Vasilievna; Belsky, Arkady Andreevich; Novikov, Nikolai Alexandrovich; Alexeeva, Nina Nikolaevna; Nikitina, Ljudmila Nikolaevna; Ljubimova, Nina Andreevna; and Dotsenko, Anna Evgenievna, 4,061,551, Cl. 204-105.00R.
Nowak, Robert H., to Motch and Merryweather Machinery Company, The. Circular saw having an improved tooth geometry and method of making the same. 4,060,880, Cl. 407-61.000.
Nowak, Terrance M.: *See—*
Bott, Gerald J.; Porter, William C.; and Nowak, Terrance M., 4,061,014, Cl. 73-45.100.
Nozaka, Toru: *See—*
Inagami, Kaoru; Mitsui, Isamu; Nakamura, Chomatsu; and Nozaka, Toru, 4,061,792, Cl. 426-330.200.
Nussbaumer, Henri J., to International Business Machines Corporation. Digital filter. 4,062,060, Cl. 364-724.000.
Nusslein, Ludwig; Pieroh, Ernst Albrecht; and Roder, Kurt, to Schering Aktiengesellschaft. 2-Trichloromethyl-5-methylsulfinyl-1,3,4-thiadiazole. 4,061,645, Cl. 260-302.0SD.
N.V. Optische Industrie "de Oude Delft": *See—*
van der Does, Lucas, 4,061,923, Cl. 250-468.000.

Oak Industries Inc.: *See—*
Lewandowski, Raymond F., 4,061,988, Cl. 338-32.00H.
Oberstar, Helen Elizabeth; and Westman, Morton Alan, to American Cyanamid Company. Conditioning shampoo composition containing a cationic derivative of a natural gum (such as guar) as the active conditioning ingredient. 4,061,602, Cl. 252-547.000.
Oce-van der Grinten N.V.: *See—*
Geurts, Petrus T. J.; and Wittenberg, Albert J., 4,061,422, Cl. 350-293.000.
O'Connor, Arthur H.; and McCullough, Robert E., to Time Computer, Inc. Solid state watch with inertial switch. 4,060,971, Cl. 58-4.00A.
O'Cull, Kathleen A.: *See—*
Dasher, George F.; O'Cull, Kathleen A.; and Schamper, Thomas J., 4,061,150, Cl. 132-7.000.
Offermanns, Heribert: *See—*
Asinger, Friedrich; Pfeifer, Wolf-Dieter; Offermanns, Heribert; Scherberich, Paul; and Schreyer, Gerd, 4,061,674, Cl. 260-534.00S.
Ogata, Masaru: *See—*
Yukinaga, Hisajiro; Kano, Hideo; and Ogata, Masaru, 4,061,490, Cl. 71-68.000.
Ogawa, Hiroshi: *See—*
Natori, Minoru; Hatuse, Toshikazu; Kawanobe, Kouhei; Ogawa, Hiroshi; Sekiya, Fukuo; Ebihara, Heihachiro; and Uchino, Misao, 4,060,974, Cl. 58-23.00R.
Ohio State University, The: *See—*
Miller, Don W.; and Gerber, Mark S., 4,061,919, Cl. 250-363.00S.
Young, Jonathan D.; and Caldecott, Ross, 4,062,010, Cl. 343-5.0NA.
Ohlinger, Manfred; Schoenafinger, Eduard; Schneider, Walter; Stritzinger, Heinz; and Vaeth, Guenter, to BASF Aktiengesellschaft. Manufacture of gamma-iron(III) oxide. 4,061,725, Cl. 423-634.000.
Ohlinger, Manfred; Schoenafinger, Eduard; Vaeth, Guenter; Stritzinger, Heinz; Koester, Eberhard; Schneehage, Hans Henning; and Steck, Werner, to BASF Aktiengesellschaft. Manufacture of acicular γ-iron(III) oxide. 4,061,726, Cl. 423-634.000.
Ohlinger, Manfred: *See—*
Vaeth, Guenter; Ohlinger, Manfred; Stritzinger, Heinz; Schoenafinger, Eduard; Wettstein, Eugen; and Guth, Wolfgang, 4,061,727, Cl. 423-634.000.
Ohlsson, Korfitz Bengt-Ingvar: *See—*
Eriksoo, Edgar; and Ohlsson, Korfitz Bengt-Ingvar, 4,061,747, Cl. 424-244.000.
Ohlstein, Herbert, to International Telephone and Telegraph Corporation. Method of bonding a dielectric substrate to a metallic carrier in a printed circuit assembly. 4,061,263, Cl. 228-124.000.
Ohmori, Sachio: *See—*
Miyazaki, Kazuo; and Ohmori, Sachio, 4,062,027, Cl. 354-127.000.
Ohno, Masaji; and Kataoka, Mutsuo, to Zaidan Hojin Biseibutsu Kagaku Kenkyu Kai. Method and composition for treating hypertension. 4,061,769, Cl. 424-283.000.
Ohshiro, Takeshi: *See—*
Funakoshi, Satoshi; Omura, Takao; and Ohshiro, Takeshi, 4,061,735, Cl. 424-177.000.
Ohtsuka, Norio, to Bridgestone Cycle Industry Co., Ltd. Display device for bicycle brake shoes. 4,061,229, Cl. 206-486.000.
Ohyama, Isao: *See—*
Hayashi, Masaki; Tanouchi, Tadao; Ito, Hiroyuki; and Ohyama, Isao, 4,061,865, Cl. 560-121.000.
Okamoto, Kiyokazu; and Hayashi, Hitoshi, to Nippon Electric Company, Ltd. Interpolator for a numerically controlled machine with step size selected in response to feed rate. 4,061,907, Cl. 364-718.000.
Okamoto, Tsuneo: *See—*
Murakami, Heiichiro; and Okamoto, Tsuneo, 4,061,477, Cl. 55-79.000.
Okamura, Kosaku: *See—*
Yamada, Hirotada; Okamura, Kosaku; Tobiki, Hisao; Tanno, Norihiko; Shimago, Kozo; Nakagome, Takenari; Komatsu, Toshiaki; Izawa, Akio; Noguchi, Hiroshi; Irie, Kenji; and Eda, Yasuko, 4,061,748, Cl. 424-246.000.
Oki, Tsutomu: *See—*
Kondo, Takajiro; Asamoto, Toshitaka; and Oki, Tsutomu, 4,060,892, Cl. 30-253.000.
Olbres, Anthony, to Morley Company, The. Shock and heat resistant storage unit. 4,061,227, Cl. 206-454.000.
Oliver, Roy; and Royer, Garfield P., to Pierce Chemical Company. Selective adsorbent for use in affinity chromatography. 4,061,591, Cl. 252-430.000.
Olsin, Albert. Metal working compound. 4,060,943, Cl. 51-281.00R.
Olson, Daniel R.: *See—*
Schroeter, Siegfried H.; and Olson, Daniel R., 4,061,652, Cl. 260-308.00B.
Olympus Optical Co., Ltd.: *See—*
Nakagawa, Jihei, 4,061,421, Cl. 350-214.000.
Omark Industries, Inc.: *See—*
Hille, Arvin A., 4,060,895, Cl. 30-384.000.
Omura, Takao: *See—*
Funakoshi, Satoshi; Omura, Takao; and Ohshiro, Takeshi, 4,061,735, Cl. 424-177.000.
Onder, Besir K., to Upjohn Company, The. Preparation of polyamide from organic diisocyanate with alkali metal salt of alcohol as catalyst. 4,061,622, Cl. 260-78.00R.
Onder, Besir K., to Upjohn Company, The. Preparation of polyamideimide from organic diisocyanate with alkali metal salt of alcohol as catalyst. 4,061,623, Cl. 260-78.0TF.
Onishi, Tetsuo, to Noritsu Koki Co., Ltd. Photographic enlarger with means for trimming. 4,061,424, Cl. 355-63.000.
Ono Pharmaceutical Company: *See—*
Hayashi, Masaki; Tanouchi, Tadao; Ito, Hiroyuki; and Ohyama, Isao, 4,061,865, Cl. 560-121.000.
Onoda, Takeru; and Otake, Masayuki, to Mitsubishi Chemical Industries Ltd. Manufacture of methacrylic acid. 4,061,673, Cl. 260-526.00N.
Onodera, Toshimi: *See—*
Kotezawa, Katsutaka; Onodera, Toshimi; Hayashi, Setsuo; and Shimanuki, Fujio, 4,062,016, Cl. 343-178.000.
Onuma, Kazuhiko: *See—*
Matsushita, Kunichi; Sakurada, Hikaru; and Onuma, Kazuhiko, 4,061,596, Cl. 252-463.000.
Or Da Industries Ltd.: *See—*
Coster, Theo Maurice Simon, 4,061,339, Cl. 273-157.00R.
Orth, Harold R.; and Swanson, William C., to International Harvester Company. Load sensing pull-type hydraulic amplifying fluid motor. 4,061,079, Cl. 91-372.000.
Ortho Pharmaceutical Corporation: *See—*
Hirsch, Allen Frederick, 4,061,663, Cl. 260-456.00A.
Kanojia, Ramesh M.; and Levine, Seymour D., 4,061,739, Cl. 424-195.000.
Orthwein, William C. Clip-on dental restoration and tools for removing same. 4,060,898, Cl. 32-40.00R.
Ortloff Corporation, The: *See—*
Campbell, Roy E.; Lawrence, John B.; and Tonne, Ronald Ray, 4,061,481, Cl. 62-29.000.
Orzalesi, Giovanni; and Selleri, Renato, to Societa Italo-Britannica L. Manetti - H. Roberts & C. Process for the preparation of 2-(4-isobutylphenyl)-propiohydroxamic acid. 4,061,668, Cl. 260-500.50H.
Otake, Masayuki: *See—*
Onoda, Takeru; and Otake, Masayuki, 4,061,673, Cl. 260-526.00N.
Otoguro, Yasuo: *See—*
Yokokawa, Takao; Kanazawa, Shogo; Otoguro, Yasuo; Suzuki, Nobukazu; Akase, Sigeyuki; Miida, Noboru; Akazawa, Tadahisa; and Kuroiwa, Kazuya, 4,061,494, Cl. 75-124.000.
Ott, Arthur Richard, to Electrohome Limited. D.C. controlled attenuator. 4,062,042, Cl. 358-27.000.
Owen, Shubel H.: *See—*
Felker, Paul J.; and Owen, Shubel H., 4,061,276, Cl. 241-69.000.
Owens-Corning Fiberglas Corporation: *See—*
Powers, Thomas V., Jr., 4,061,285, Cl. 242-18.00R.
Rimmel, Carl F., 4,061,485, Cl. 65-4.00R.
Owens-Illinois, Inc.: *See—*
Zielinski, Eugene J., 4,060,889, Cl. 29-628.000.
Oxford Chemicals, Incorporated: *See—*
Magid, Robert P.; and Sly, Gerald, 4,061,820, Cl. 428-311.000.
Oy E. Sarlin AB: *See—*
Lund, Rolf, 4,061,345, Cl. 277-88.000.
Ozaki, Hiromi; Yamane, Mamoru; Kodama, Hachio; and Yoshika, Haruo, to Nippon Mining Co., Ltd. Process for producing synthetic caking coal and binder pitch. 4,061,472, Cl. 44-1.00R.
Ozawa, Toshiaki: *See—*
Nishikawa, Tatsuo; and Ozawa, Toshiaki, 4,061,219, Cl. 197-164.000.
P. R. Mallory & Co. Inc.: *See—*
Scott, Charles E., 4,062,007, Cl. 340-309.100.
Pacheco, Luciano: *See—*
van der Gaag, Leonard C.; and Pacheco, Luciano, 4,061,925, Cl. 250-553.000.
Paddock, Gordon R., to General Motors Corporation. Air switching diverter valve. 4,060,984, Cl. 60-290.000.
Paetsch, Werner: *See—*
Niethammer, Dieter; and Paetsch, Werner, 4,061,997, Cl. 340-146.1AX.
Palazzolo, Salvatore E.: *See—*
McCaskey, Harold O., Jr.; and Palazzolo, Salvatore E., 4,061,823, Cl. 428-318.000.
Paleveda, William J., Jr.: *See—*
Shepard, Kenneth L.; and Paleveda, William J., Jr., 4,061,763, Cl. 424-274.000.
Palmer, John P.; Isbister, Stephen W.; and Elvin, John D. F., to ITW Limited. Catches. 4,061,369, Cl. 292-163.000.
Papenfuhs, Theodor: *See—*
Hahnke, Manfred; Hohmann, Kurt; and Papenfuhs, Theodor, 4,061,464, Cl. 8-79.000.
Papkov, Oleg Sergeevich: *See—*
Lifshits, Viktor Senderovich; Petrov, Georgy Nikolaevich; Papkov, Oleg Sergeevich; Khomenko, Vladimir Ivanovich; Gerasimenko, Alexandr Yakovlevich; Taradaiko, Alexandr Korneevich; Zemchenko, Alexandr Mikhailovich; and Gremyakov, Ivan Petrovich, 4,061,078, Cl. 90-24.00C.
Pappanikolaou, George. Pick-proof lock cylinder and key therefor. 4,061,004, Cl. 70-363.000.
Parke, Davis & Company: *See—*
Hastings, Stephen G.; Poschel, Bruno P. H.; and Butler, Donald E., 4,061,756, Cl. 424-263.000.
Parker, John A.: *See—*
Gilwee, William J., Jr.; and Parker, John A., 4,061,812, Cl. 428-117.000.
Parker, Sidney A.: *See—*
Dirk, William R.; and Parker, Sidney A., 4,061,444, Cl. 417-312.000.
Parkes, David M., to Kaiser Resources Ltd. Hydraulic mining apparatus and method. 4,061,398, Cl. 299-17.000.

Parks, Robert R., to General Motors Corporation. Leaf spring suspension system. 4,061,364, Cl. 280-718.000.
Parmann, Gunnar. Combined mold element and sealing ring. 4,061,459, Cl. 425-403.000.
Parris, Peter P.: *See—*
Jensen, Richard H.; and Parris, Peter P., 4,060,936, Cl. 49-465.000.
Paton, Boris Evgenievich; Medovar, Boris Izrailevich; Baglai, Vitaly Mikhailovich; Latash, Jury Vadimovich; Emelyanenko, July Georgievich; Stupak, Leonid Mikhailovich; Alferov, Jury Fedorovich; Bondarenko, Oleg Petrovich; Schupak, Grigory Bentsionovich; Shuruev, Lev Andreevich; Khasin, Kim Moiseevich; Frolov, Jury Fedorovich; Salmin, Valery Vasilievich; Lugovsky, Vladimir Ivanovich; Marjuschenko, Vilen Fedorovich; Shaburov, Fedcr Fedorovich; Schelkunov, Jury Andreevich, deceased; and by Schelkunova, Margarita Petrovna, administratrix. Installation for electroslag melting of heavy-weight metal ingots. 4,061,180, Cl. 164-252.000.
Pattison, Victor A.: *See—*
Maul, James J.; and Pattison, Victor A., 4,061,688, Cl. 260-651.00F.
Pawson, Beverly Ann: *See—*
Klaus, Michael Josef; and Pawson, Beverly Ann, 4,061,656, Cl. 260-332.20A.
Pech, Karl H., to Chandler Evans Inc. Impeller pump and vane pump assembly with clutch deactivation. 4,061,439, Cl. 415-18.000.
Pedestal Crane Corporation: *See—*
Goss, John B.; Morrow, William D.; and Corbett, Jack William, 4,061,230, Cl. 212-70.000.
Peed, Paul V. Wind driven electrical generator. 4,061,926, Cl. 290-55.000.
Pelletier, Ronald R.; Hansen, Robert D.; and Vanderbush, James J., to Dow Chemical Company, The. Latex coatings for electrographic sheets. 4,061,833, Cl. 428-511.000.
Peltier, Francois, to Moteurs Leroy-Somer. Method and a device for the automatic replacement of a workpiece to be machined on a machine-tool. 4,061,062, Cl. 82-2.700.
Pennsylvania Crusher Corporation: *See—*
Sautter, Daniel C., 4,061,279, Cl. 241-86.100.
Pennsylvania Engineering Corporation: *See—*
Fisher, Howard M., 4,061,318, Cl. 266-246.000.
Perkin-Elmer Limited: *See—*
Taylor, Leonard Harold, 4,062,021, Cl. 346-136.000.
Perkins, Donald W.; and Smith, Marvin W., to United States of America, Navy. Regulated power supply having a series arrangement of inverters. 4,062,057, Cl. 363-71.000.
Perkins, Gerard T. Fluid pressure sensing device. 4,061,034, Cl. 73-398.0AR.
Perrin, Rene: *See—*
Coulon, Andre; and Perrin, Rene, 4,060,883, Cl. 29-156.80R.
Perry, Gary D.: *See—*
Lowder, James E.; and Perry, Gary D., 4,061,392, Cl. 296-28.00C.
Peterson, Philip R.; Taylor, David W.; and Levijoki, Wayne A., to General Motors Corporation. Wheel lock control system failure and disabling circuit. 4,061,402, Cl. 303-92.000.
Peterson, Philip R.; and Taylor, David W., to General Motors Corporation. Wheel lock control system. 4,061,403, Cl. 303-106.000.
Petras, Raymond J.; and Groff, Gaylord L., to Minnesota Mining and Manufacturing Company. Flame-retardant pressure-sensitive adhesive composition. 4,061,826, Cl. 428-356.000.
Petrelis, Peter G., to TRW Inc. Redundancy switching system. 4,061,989, Cl. 333-7.00R.
Petrell, Jurgen: *See—*
Schallus, Erich; Mietens, Gerhard; Fucker, Gregor; Petrell, Jurgen; and Dorn, Friedrich Wilhelm, 4,061,719, Cl. 423-445.000.
Petro-Tex Chemical Corporation: *See—*
Edmondson, Morris S., 4,061,850, Cl. 526-220.000.
Petrocci, Alfonso N.: *See—*
Lada, Arnold; Petrocci, Alfonso N.; Green, Harold A.; and Merianos, John J., 4,061,750, Cl. 424-249.000.
Petrov, Georgy Nikolaevich: *See—*
Lifshits, Viktor Senderovich; Petrov, Georgy Nikolaevich; Papkov, Oleg Sergeevich; Khomenko, Vladimir Ivanovich; Gerasimenko, Alexandr Yakovlevich; Taradaiko, Alexandr Korneevich; Zemchenko, Alexandr Mikhailovich; and Gremyakov, Ivan Petrovich, 4,061,078, Cl. 90-24.00C.
Pettitt, George F. Tool for the insertion of thumb tacks. 4,061,225, Cl. 206-230.000.
Peyer, Siegfried: *See—*
Schwartz, Hermann, 4,060,965, Cl. 57-34.00R.
Pfeifer, Josef; Rheude, Alfred; and Muller, Jurgen, to AGFA-Gevaert Aktiengesellschaft. Method and apparatus for making X-ray images. 4,061,915, Cl. 250-315.00A.
Pfeifer, Wolf-Dieter: *See—*
Asinger, Friedrich; Pfeifer, Wolf-Dieter; Offermanns, Heribert; Scherberich, Paul; and Schreyer, Gerd, 4,061,674, Cl. 260-534.00S.
Phillips, Kenneth G.: *See—*
Tai, Wun Ten; Mura, Lawrence A.; Phillips, Kenneth G.; and Ballweber, Edward G., 4,061,695, Cl. 260-929.000.
Phillips Petroleum Company: *See—*
Austin, Oliver K., 4,061,316, Cl. 366-303.000.
Brown, James D.; and Uraneck, Carl A., 4,061,638, Cl. 260-270.00P.
Phillips, Raymond Francis, to Magnesium Elektron Limited. Preparation of ammonium and potassium zirconium carbonates. 4,061,720, Cl. 423-265.000.
Phillips, William W., to Shaymar, Inc. Speaker system. 4,061,877, Cl. 179-1.00E.
Pierce Chemical Company: *See—*
Oliver, Roy; and Royer, Garfield P., 4,061,591, Cl. 252-430.000.
Pieroh, Ernst Albrecht: *See—*
Nusslein, Ludwig; Pieroh, Ernst Albrecht; and Roder, Kurt, 4,061,645, Cl. 260-302.0SD.
Pigeon, Michel, to Commissariat a l'Energie Atomique. Process of and apparatus for non-destructive eddy current testing involves the suppression of displayed lobes corresponding to fault parameters to be eliminated from the display. 4,061,968, Cl. 324-40.000.
Pilvet, Aksel. Key operated lock. 4,061,003, Cl. 70-352.000.
Pinchot, Gifford, III. Hydrofoil vessel. 4,061,104, Cl. 114-281.000.
Pinto, Albert A.; and Stanley, Alexander J., to Nabisco, Inc. Machine for erecting folded cartons. 4,061,081, Cl. 93-53.0SD.
Piotrowski, Herbert: *See—*
Rothgordt, Ulf; Ehlers, Bernd; Bunge, Ernst; and Piotrowski, Herbert, 4,062,014, Cl. 340-347.0DD.
Pippin, Jack M.: *See—*
Cox, James L.; and Pippin, Jack M., 4,061,154, Cl. 135-34.000.
Pitney-Bowes, Inc.: *See—*
Swaniger, James R.; and Schubert, Keith E., 4,061,044, Cl. 74-31.000.
Pittman, Max G.: *See—*
Frye, Burton L.; Pittman, Max G.; Runge, David A.; Souza, Lawrence C.; and LaVoie, Raymond V., 4,061,480, Cl. 55-356.000.
Plasticolor Molded Products, Inc.: *See—*
Bagne, Gordon, 4,061,352, Cl. 280-154.50R.
Plessey Handel und Investments A.G.: *See—*
Stewart, William James, 4,061,416, Cl. 350-96.00C.
Ploix, Jean Luc: *See—*
Raverdy, Yvan; and Ploix, Jean Luc, 4,062,009, Cl. 340-324.00R.
Plum, Hans: *See—*
Arndt, Friedrich; and Plum, Hans, 4,061,491, Cl. 71-92.000.
Poensgen, Rudolf, to Siemens Aktiengesellschaft. Liquid-crystal display with polarizer, and method of making the same. 4,061,418, Cl. 350-150.0LC.
Pohl, Hanns: *See—*
Kahr, Kurt; Pohl, Hanns; Rapp, Guenther; and Lauz, Peter, 4,061,677, Cl. 260-566.00A.
Poisson, Regis: *See—*
Michel, Max; and Poisson, Regis, 4,061,594, Cl. 252-462.000.
Polaroid Corporation: *See—*
Idelson, Elbert M., 4,061,654, Cl. 260-314.500.
Politycki, Alfred, to Siemens Aktiengesellschaft. Method and masking structure for configurating thin layers. 4,061,814, Cl. 428-196.000.
Pomerantzeff, Oleg, to Retina Foundation. Illumination system for ophthalmoscope. 4,061,423, Cl. 351-16.000.
Pommer, Wayne A. Test instrument for determining apparent power consumption and ground faults in various portions of a distributed-load, constant voltage audio distribution system. 4,061,891, Cl. 179-175.10A.
Poole, Robert E. J., Jr., to Upjohn Company, The. Novel compositions. 4,061,815, Cl. 428-215.000.
Poppe, Wassily; and Fielding, Ivor R., to Standard Oil Company (Indiana). Process of forming a polypropylene coated substrate from an aqueous suspension of polypropylene particles. 4,061,835, Cl. 428-522.000.
Porter, William C.: *See—*
Bott, Gerald J.; Porter, William C.; and Nowak, Terrance M., 4,061,014, Cl. 73-45.100.
Poschel, Bruno P. H.: *See—*
Hastings, Stephen G.; Poschel, Bruno P. H.; and Butler, Donald E., 4,061,756, Cl. 424-263.000.
Pospisil, Frantisek; and Sedlak, Vaclav, to Adamovske strojirny, narodni podnik. Cylinders and rollers for printing machines. 4,060,882, Cl. 29-132.000.
Post, Rodney Morris: *See—*
Lang, Robert S.; Post, Rodney Morris; and Hogan, Thomas Leo, 4,060,946, Cl. 52-169.700.
Powell, James D.: *See—*
United States of America, National Aeronautics and Space Administration; Wynveen, Richard A.; Powell, James D.; and Schubert, Franz H., 4,061,570, Cl. 210-96.00M.
Powell, James E., to Shell Oil Company. 5,6-Dihydro-4H-1,3-thiazine-2-carboxaldehyde oxime useful as insecticides. 4,061,749, Cl. 424-246.000.
Powers, Thomas V., Jr., to Owens-Corning Fiberglas Corporation. Method and apparatus for packaging linear material. 4,061,285, Cl. 242-18.00R.
PPG Industries, Inc.: *See—*
Barter, James A., 4,061,704, Cl. 264-83.000.
Greenberg, Charles B., 4,061,830, Cl. 428-469.000.
Strong, W. Albert, 4,061,721, Cl. 423-272.000.
Prather, Joseph E.; and Khalifa, Ramzi A., to Edson Tool & Manufacturing Company, Inc. Self-locking devices. 4,061,371, Cl. 292-198.000.
Pratt, Norman Leslie; and Davies, Michael Bowen. Laser machining. 4,062,046, Cl. 358-93.000.
Precision Metalsmiths, Inc.: *See—*
Watts, Claude H., 4,061,175, Cl. 164-45.000.
Predhome, Wilfred F., Jr. Valve train for internal combustion engine. 4,061,115, Cl. 123-90.160.
Preier, Horst; and Riedel, Wolfgang. Measurement of low concentration gases. 4,061,918, Cl. 250-343.000.
Preston, Glenn W.; Chudleigh, Walter H., Jr.; and Ehrich, William G., to Control Data Corporation. MTI System processor and method. 4,062,011, Cl. 343-7.00A.

Preuss, Friedrich, to Roland Offsetmaschinenfabrik Faber & Schleicher AG. Auxiliary pile board assembly for printing presses. 4,061,086, Cl. 101-240.000.
Price, Bruce D. Kaleidoscopic apparatus. 4,061,414, Cl. 350-4.000.
Price, Charles Dan: *See—*
Goldstein, Marvin Sherwood; Lindsley, John Francis; Allison, William Woodrow; and Price, Charles Dan, 4,061,597, Cl. 252-465.000.
Price, Donald R.: *See—*
Zall, Robert R.; Sobel, A. Theodore; and Price, Donald R., 4,061,504, Cl. 134-95.000.
Price, Edgar Elmer; and Spurles, Louise Leone, to Xerox Corporation. Variable magnification lens system. 4,061,419, Cl. 350-184.000.
Price, Herbert Benjamin, to Spencer Wright Industries, Inc. Means for mounting tufting machine hooks and knives. 4,061,095, Cl. 112-79.00R.
Procter & Gamble Company, The: *See—*
Brush, John B., 4,061,063, Cl. 83-55.000.
DesMarais, Thomas A., 4,061,145, Cl. 128-275.000.
Youngquist, Rudolph William, 4,061,784, Cl. 426-93.000.
Proctor & Schwartz, Inc.: *See—*
Hoffman, Charles E., 4,060,914, Cl. 34-219.000.
Proebsting, Robert J.; and Schroeder, Paul R., to Mostek Corporation. Dynamic random access memory system. 4,061,954, Cl. 320-1.000.
Proebsting, Robert J.; and Schroeder, Paul R., to Mostek Corporation. Dynamic random access memory system. 4,061,999, Cl. 365-182.000.
Proebsting, Robert J.: *See—*
Schroeder, Paul R.; and Proebsting, Robert J., 4,061,933, Cl. 307-262.000.
Proost en Brandt N.V.: *See—*
Mulder, Franciscus Elbertus, 4,061,456, Cl. 425-140.000.
Protective Treatments, Inc.: *See—*
Thompson, James Thomas; and Seto, Kenneth Hon, 4,061,805, Cl. 428-31.000.
Proudman, Donald Lewis. Apparatus for folding flatwork. 4,061,326, Cl. 270-69.000.
Pryor, Joseph E., to Austin Industries, Inc. Lock and lift mechanism for a foldable implement. 4,061,195, Cl. 172-456.000.
Przedsiebiorstwo Projektowania i Wyposazania Zakladow Przemyslu Maszyn i Aparatow Ekejtrtczbtcg "Promel": *See—*
Ficek, Jan, 4,061,181, Cl. 164-292.000.
Quadracast Systems, Inc.: *See—*
Dorren, Louis, 4,061,882, Cl. 179-15.0BT.
Quast, Kenneth J., to Bard Laboratories, Inc. Thermal recording system. 4,061,831, Cl. 428-480.000.
Questar Corporation: *See—*
Kaprelian, Edward K.; and Mimmack, William E., 4,061,420, Cl. 350-199.000.
Quinn, Edwin John: *See—*
Dieck, Ronald Lee; and Quinn, Edwin John, 4,061,606, Cl. 260-2.50R.
R. J. Reynolds Tobacco Company: *See—*
Lee, Chin Kee, 4,061,539, Cl. 195-31.00F.
Rackard, Troy D.; and Snider, Grover E., to National Gypsum Company. Concealed clip for hollow strips. 4,060,950, Cl. 52-456.000.
Raczkowski, Mark Bogdan. Ash tray with smoke exhauster. 4,061,149, Cl. 131-231.000.
Radcliffe, Richard J., to EBCO Manufacturing Company. Heat exchanger for a refrigerated water cooler. 4,061,184, Cl. 165-38.000.
Railweight Inc. (U.K.) Limited: *See—*
Caldicott, Jack Richard, 4,061,198, Cl. 177-50.000.
Raisbeck, Wesley Paul; Bass, Merlyn Duane; Whicker, Bobbie Dean; Davis, William Clair; and Fairbank, Raymond Harry, to Deere & Company. Harvester cutterhead. 4,061,284, Cl. 241-294.000.
Rajasekaran, Ramanujam; Taylor, Dennis O.; and Whittlesey, James W., to Cummins Engine Company, Inc. Dual cooling system. 4,061,187, Cl. 165-107.000.
Ramaglia, Michael: *See—*
Warshaw, Saul; Loveland, Winton; Hanemann, Horst J.; and Ramaglia, Michael, 4,061,526, Cl. 156-468.000.
Randall, Lee S. Locker system. 4,061,379, Cl. 312-201.000.
Randle, Raymond Thomas, to Steetley (Mfg.) Limited. Filtration apparatus. 4,061,575, Cl. 210-350.000.
Ranks Hovis McDougall Limited: *See—*
Solomons, Gerald L.; and Scammell, Gerald W., 4,061,781, Cl. 426-60.000.
Rapp, Guenther: *See—*
Kahr, Kurt; Pohl, Hanns; Rapp, Guenther; and Lauz, Peter, 4,061,677, Cl. 260-566.00A.
Rappleyea, Frederick A., to Kendall Company, The. Pad for protective helmet. 4,060,855, Cl. 2-413.000.
Rasmussen, Harry R., to Crest Industries, Inc. Control unit mounting and interconnecting apparatus for telephone sets. 4,061,888, Cl. 179-100.00D.
Rath, Heinrich Bernard: *See—*
Gee, David William; Klassen, Horst Willi; and Rath, Heinrich Bernard, 4,061,209, Cl. 188-73.300.
Ratier-Forest: *See—*
Belliere, Pierre A., 4,061,440, Cl. 416-157.00R.
Raverdy, Yvan; and Ploix, Jean Luc, to Thomson-CSF. Electrophoretic display device. 4,062,009, Cl. 340-324.00R.
Ray-Chaudhuri, Dilip K.: *See—*
Stanley, Henry; and Ray-Chaudhuri, Dilip K., 4,061,618, Cl. 260-29.2TN.
Raymond Lee Organization, Inc., The: *See—*
Arriola, Baltazar, 4,061,065. Cl. 83-562.000.
Bryerton, John B., 4,060,871, Cl. 15-29.000.
Lo, Kenneth K., 4,061,293, Cl. 244-26.000.
Raynaud, Guy R.: *See—*
Fauran, Claude P.; Eberle, Jeannine A.; Bourgery, Guy R.; Raynaud, Guy R.; and Gouret, Claude J., 4,061,855, Cl. 544-122.000.
RCA Corporation: *See—*
Ahmed, Adel Abdel Aziz, 4,061,959, Cl. 323-1.000.
Goldman, Abraham; and Datta, Pabitra, 4,061,529, Cl. 156-644.000.
Miyatani, Kazuo; and Sato, Isao, 4,061,555, Cl. 204-242.000.
Neilson, John Manning Savidge, 4,062,032, Cl. 357-13.000.
Stewart, Roger Green, 4,061,962, Cl. 323-22.00R.
Woodward, Oakley McDonald; and Siukola, Matti Solmu Olavi, 4,062,019, Cl. 343-797.000.
Recognition Equipment Incorporated: *See—*
Carnahan, Joe B.; and Koenig, Robert B., 4,061,380, Cl. 339-8.00R.
Redimix Beverages Limited: *See—*
Baxter, Gerald M., 4,061,782, Cl. 426-86.000.
Redken Laboratories, Inc.: *See—*
Murray, John S.; and Sunjara, Sime, 4,061,898, Cl. 219-211.000.
Yates, Robert W., 4,061,022, Cl. 73-95.000.
Redman, Andrew Paul: *See—*
Dunn, James Knox, III; Tucker, Lee Everett; and Redman, Andrew Paul, 4,061,167, Cl. 144-34.00E.
Reed, David H.: *See—*
George, Jay R.; Line, Larry L.; and Reed, David H., 4,061,516, Cl. 156-94.000
Reese, Olen Dennis. Sub-surface irrigation method and apparatus. 4,060,991, Cl. 61-13.000.
Reflectolite Products Inc.: *See—*
Hauber, Peter Fritz, 4,061,370, Cl. 292-175.000.
Reggers, Charles Gerardus, to Delta Plastics Limited. Animal identification tag. 4,060,922, Cl. 40-302.000.
Reida, William D., to AMI Industries, Inc. Tie down for rotating seat cushions. 4,061,396, Cl. 297-283.000.
Reimers, Fred Alan; Beckmann, Robert Martin; Burzynski, William Arthur; Tomlinson, Dennis Eugene; and Schwartz, William Henry, to Motorola, Inc. Synthesizer. 4,061,973, Cl. 325-17.000.
Reinermann, Karl-Heinz: *See—*
Sistig, Eberhard; and Reinermann, Karl-Heinz, 4,061,848, Cl. 526-61.000.
Reis, August; Fend, Fritz; and Hils, Karl, to Sachs-Systemtechnik GmbH. Portable electrolytic apparatus for purifying drinking water. 4,061,556, Cl. 204-271.000.
Rembaum, Alan: *See—*
Hadek, Vaclav; Somoano, Robert B.; and Rembaum, Alan, 4,061,834, Cl. 428-522.000.
Retelny, Andrew G., to McDonald's Corporation. Food plate package. 4,061,241, Cl. 220-4.00B.
Retina Foundation: *See—*
Pomerantzeff, Oleg, 4,061,423, Cl. 351-16.000.
Revell, Alan E., to American Air Filter Company, Inc. Door latch device. 4,061,373, Cl. 292-251.000.
Rey, Hans-Georg: *See—*
Lange, Hans; Rittersdorf, Walter; Rey, Hans-Georg; Werner, Wolfgang; and Rieckmann, Peter, 4,061,468, Cl. 23-253.0TP.
Rheude, Alfred: *See—*
Pfeifer, Josef; Rheude, Alfred; and Muller, Jurgen, 4,061,915, Cl. 250-315.00A.
Rhone-Poulenc Industries: *See—*
Mazarguil, Honore; Meiller, Francois; and Monsan, Pierre, 4,061,828, Cl. 428-403.000.
Michel, Max; and Poisson, Regis, 4,061,594, Cl. 252-462.000.
Rhone-Poulenc-Textile: *See—*
Couchoud, Paul, 4,061,615, Cl. 260-45.70P.
Rhone-Poulenc Textiles: *See—*
Barbe, Gerard; and Deyres, Andre, 4,060,968, Cl. 57-140.0BY.
Rhone Progil: *See—*
Leleu, Gerard; Bedague, Pierre; and Sillion, Bernard, 4,061,581, Cl. 252-32.70E.
Ricards, Charles R.: *See—*
Decker, John J.; and Ricards, Charles R., 4,061,163, Cl. 141-7.000.
Riccio, Pasquale R., to Ciba-Geigy Corporation. Aerosol dispenser using butane propellant. 4,061,252, Cl. 222-402.180.
Riccitiello, Salvatore R.: *See—*
Sawko, Paul M.; and Riccitiello, Salvatore R., 4,061,579, Cl. 252-8.100.
Rice, George A.: *See—*
Girard, Roland T.; and Rice, George A., 4,061,584, Cl. 252-63.000.
Richard Heinze: *See—*
Busse, Peter, 4,060,949, Cl. 52-285.000.
Richardson, James L., to Veda, Inc. Tank spreader. 4,061,273, Cl. 239-172.000.
Richardson-Merrell Inc.: *See—*
Blohm, Thomas R.; Grisar, J. Martin; and Wiech, Norbert L., 4,061,746, Cl. 424-244.000.
Richmond Industries, Inc.: *See—*
Allmendinger, Norbert, 4,061,507, Cl. 148-12.00R.
Richter, Manfred: *See—*
Schafer, Werner; Busch, Wolfram; Wallhausser, Hermann; Richter, Manfred; and Wilhelm, Siegfried, 4,061,710, Cl. 264-300.000.
Ricoh Co., Ltd.: *See—*
Fujimoto, Sakae; Sue, Takaji; and Misawa, Toshihiko, 4,061,328, Cl. 271-10.000.
Yanagawa, Nobuyuki, 4,061,330, Cl. 271-174.000.
Riddle, Neville L.: *See—*
Kitchen, John P.; and Riddle, Neville L., 4,060,862, Cl. 5-260.000.

Ridgway, Bryan George, to Rolls-Royce Motors Limited. Apparatus for retracting a retractable protrusion. 4,061,303, Cl. 248-204.000.
Rieckmann, Peter: *See—*
  Lange, Hans; Rittersdorf, Walter; Rey, Hans-Georg; Werner, Wolfgang; and Rieckmann, Peter, 4,061,468, Cl. 23-253.0TP.
Riedel, Wolfgang: *See—*
  Preier, Horst; and Riedel, Wolfgang, 4,061,918, Cl. 250-343.000.
Rieter Machine Works, Ltd.: *See—*
  Lamparter, Hansruedi, 4,061,948, Cl. 318-87.000.
Rimmel, Carl F., to Owens-Corning Fiberglas Corporation. Method of and apparatus for controlling the distribution of fibers on a receiving surface. 4,061,485, Cl. 65-4.00R.
Rinehart, Michael G.: *See—*
  Schmidt, Ernest J., Jr.; Rinehart, Michael G.; and Blevins, Bascom D., 4,061,350, Cl. 280-87.04A.
Rittersdorf, Walter: *See—*
  Lange, Hans; Rittersdorf, Walter; Rey, Hans-Georg; Werner, Wolfgang; and Rieckmann, Peter, 4,061,468, Cl. 23-253.0TP.
Roantree, James P.; and Swartzentruber, Glenn A., to United Technologies Corporation. Dual range, torque rebalancing of inertial sensor. 4,062,004, Cl. 340-187.000.
Robert, Andre, to Upjohn Company, The. Method of reducing the undesirable gastrointestinal effects of prostaglandin synthetase inhibitors with PGA compounds. 4,061,742, Cl. 424-234.000.
Robert Bosch G.m.b.H.: *See—*
  Brakel, Kornelius, 4,061,159, Cl. 137-596.000.
  Heizmann, Frieder, 4,060,906, Cl. 33-181.00R.
  Sopha, Klaus, 4,061,155, Cl. 137-85.000.
Roberts, Edward D., to U.S. Philips Corporation. Positive-working electron resists. 4,061,832, Cl. 428-500.000.
Robertson, Donald A., to Indexomatic, Inc. Milling cutter. 4,061,076, Cl. 90-11.00A.
Robinson, Graham: *See—*
  Jones, Ivor Wynn; Robinson, Graham; and Bird, Thomas Lewis, 4,061,840, Cl. 429-104.000.
Robinson, Owen R. Animal ear tag. 4,060,921, Cl. 40-301.000.
Robinson, Walter L. Pneumatic aquatic device. 4,060,866, Cl. 9-310.00D.
Rochat, Daniel, to Ebauches S.A. Timepiece. 4,060,977, Cl. 58-85.500.
Rockefeller, Winston C., to Colgate-Palmolive Company. Metering dispensing bottle. 4,061,253, Cl. 222-442.000.
Rockwell International Corporation: *See—*
  George, Peter K., 4,062,003, Cl. 365-16.000.
Rockwell-Rimoldi S.p.A.: *See—*
  Marforio, Nerino, 4,061,097, Cl. 112-121.150.
Rodeman, Donald W.: *See—*
  Endres, Thomas E.; and Rodeman, Donald W., 4,061,981, Cl. 325-419.000.
Roder, Kurt: *See—*
  Nusslein, Ludwig; Pieroh, Ernst Albrecht; and Roder, Kurt, 4,061,645, Cl. 260-302.0SD.
Rody, Jean, to Ciba-Geigy Corporation. 1-Aza-4-thiacyclohexane-4,4-dioxide derivatives. 4,061,631, Cl. 544-53.000.
Roffia, Paolo: *See—*
  Fumagalli, Carlo; Caprara, Giuseppe; and Roffia, Paolo, 4,061,868, Cl. 560-246.000.
Rohm and Haas Company: *See—*
  Brodnyan, John G.; Holloway, Donald F.; and Le Sota, Stanley, 4,061,822, Cl. 428-315.000.
Rohr Industries, Incorporated: *See—*
  Nerem, Arne, 4,061,930, Cl. 307-254.000.
Roland Offsetmaschinenfabrik Faber & Schleicher AG.: *See—*
  Preuss, Friedrich, 4,061,086, Cl. 101-240.000.
Rollmann, Louis D.: *See—*
  Kerr, George T.; and Rollmann, Louis D., 4,061,717, Cl. 423-329.000.
Rolls-Royce Motors Limited: *See—*
  Ridgway, Bryan George, 4,061,303, Cl. 248-204.000.
Rolm Corporation: *See—*
  Kasson, James M.; and Wood, Samuel F., 4,061,887, Cl. 179-99.000.
Romanyszyn, Michael Taras, Jr.: *See—*
  Lindler, James Monroe; and Romanyszyn, Michael Taras, Jr., 4,061,806, Cl. 428-35.000.
Rose, Carl John: *See—*
  Lake, Anthony William; and Rose, Carl John, 4,061,779, Cl. 424-331.000.
Rose, Thomas J.: *See—*
  Schmanski, Donald W.; and Rose, Thomas J., 4,061,435, Cl. 404-10.000.
Rosenberg, Robert: *See—*
  Cuomo, Jerome John; DiStefano, Thomas Herman; and Rosenberg, Robert, 4,062,038, Cl. 357-30.000.
Rosenberg, William E., to Columbia Chemical Corporation. Acidic plating bath and additives for electrodeposition of bright tin. 4,061,547, Cl. 204-54.00R.
Rosenfeld, Steven Allen, to Magidoff, Barry G., a part interest. Luminescent jewelry. 4,061,910, Cl. 362-34.000.
Ross, Joseph D. Collapsible lamp shade frame. 4,061,913, Cl. 362-357.000.
Rothenberg, Sidney; and Vostovich, Joseph Edward, to General Electric Company. Method of patching voids in a semi-conductive component of insulated electric cable, and compound therefor. 4,061,703, Cl. 264-36.000.
Rothgordt, Ulf; Ehlers, Bernd; Bunge, Ernst; and Piotrowski, Herbert, to U.S. Philips Corporation. Natural binary to logarithmic binary conversion device with means for range selection. 4,062,014, Cl. 340-347.0DD.
Rotocrop International, Ltd.: *See—*
  Wilson, Clifford Arthur, 4,060,945, Cl. 52-169.500.
Roussel Uclaf: *See—*
  Martel, Jacques; Buendia, Jean; and Vivat, Michel, 4,061,729, Cl. 424-305.000.
Rowe-DeArmond, Inc.: *See—*
  Rowe, Horace N., 4,061,934, Cl. 310-323.000.
Rowe, Horace N., to Rowe-DeArmond, Inc. Vibration pickup unit for sensing vibrations of musical instruments and the like. 4,061,934, Cl. 310-323.000.
Rowland, Stanley P.: *See—*
  Franklin, William E.; Madacsi, John P.; and Rowland, Stanley P., 4,061,465, Cl. 8-185.000.
Rowlandson, Lyall G.: *See—*
  Hamid, Michael A.; and Rowlandson, Lyall G., 4,061,991, Cl. 333-22.00R.
Royer, Garfield P.: *See—*
  Oliver, Roy; and Royer, Garfield P., 4,061,591, Cl. 252-430.000.
Rubinfeld, Joseph, to Colgate-Palmolive Company. Detergents. 4,061,603, Cl. 252-548.000.
Rudolph, Stephen Edward: *See—*
  Glowaky, Raymond Charles; Rudolph, Stephen Edward; and Bierwagen, Gordon Paul, 4,061,610, Cl. 260-17.4ST.
  Glowaky, Raymond Charles; Rudolph, Stephen Edward; and Bierwagen, Gordon Paul, 4,061,611, Cl. 260-17.4ST.
Runge, David A.: *See—*
  Frye, Burton L.; Pittman, Max G.; Runge, David A.; Souza, Lawrence C.; and LaVoie, Raymond V., 4,061,480, Cl. 55-356.000.
Rushing, Allen J., to Eastman Kodak Company. Web tracking apparatus. 4,061,222, Cl. 198-807.000.
Rutgerswerke Aktiengesellschaft: *See—*
  Schafer, Werner; Busch, Wolfram; Wallhausser, Hermann; Richter, Manfred; and Wilhelm, Siegfried, 4,061,710, Cl. 264-300.000.
Ryan, Arthur B.; and Thomas, Charles B., to Gleason Works, The. Cutter head assembly for gear cutting machines. 4,060,881, Cl. 407-22.000.
Rylewski, Eugeniusz M. Fluid rotating machines with spiral-like passages and vane wheels. 4,061,449, Cl. 418-226.000.
Ryu, Ji-Yong; and Germanas, Dalia, to UOP Inc. Process for the conversion of aromatic hydrocarbons. 4,061,689, Cl. 260-671.00R.
S.R.M. Hydromekanik Aktiebolag: *See—*
  Ahlen, Karl Gustav, 4,061,207, Cl. 188-264.00E.
Saab-Scania Aktiebolag: *See—*
  Nordstrom, Sigurd Andrew Mauritz, 4,061,377, Cl. 308-207.00R.
Sachs-Systemtechnik GmbH: *See—*
  Reis, August; Fend, Fritz; and Hils, Karl, 4,061,556, Cl. 204-271.000.
Sachuk, Daniel B.; and Lane, Robert L., to Computer Peripherals, Inc. Offset card feed apparatus. 4,061,329, Cl. 271-10.000.
Saczawa, John S., Jr.: *See—*
  Montgomery, James R.; and Saczawa, John S., Jr., 4,061,384, Cl. 293-71.00R.
Saida, Yoshinori; and Katoh, Kazumasa, to Nissan Motor Co., Ltd. Knock level control apparatus for an internal combustion engine. 4,061,116, Cl. 123-117.00D.
St. Clair, Paul J. Car rack for golf carts. 4,061,257, Cl. 224-42.080.
Saito, Masayasu. Underwater breathing device. 4,061,140, Cl. 128-145.00A.
Saito, Sadayuki: *See—*
  Tanaka, Sadaharu; Saito, Sadayuki; and Hirano, Sensaburo, 4,061,319, Cl. 266-281.000.
Saito, Shunjiro; Aue, Kazuhide; and Shimojo, Nobuei, to TDK Electronics Co., Ltd. Electrode. 4,061,558, Cl. 204-290.00F.
Saitou, Tadashi: *See—*
  Sakamaki, Hiroshi; Maeda, Toshiyuki; Sakai, Toshimitsu; and Saitou, Tadashi, 4,061,446, Cl. 418-133.000.
Sakai, Toshimitsu: *See—*
  Sakamaki, Hiroshi; Maeda, Toshiyuki; Sakai, Toshimitsu; and Saitou, Tadashi, 4,061,446, Cl. 418-133.000.
Sakamaki, Hiroshi; Maeda, Toshiyuki; Sakai, Toshimitsu; and Saitou, Tadashi, to Nippon Piston Ring Kabushiki Kaisha; and Toyota Jidosha Kogyo Kabushiki Kaisha. Rotary air pump or compressor with flexible end sealing plates. 4,061,446, Cl. 418-133.000.
Sakamoto, Teruo: *See—*
  Sato, Fumio; Sakamoto, Teruo; Watashiro, Seiichi; Inoue, Hayao; and Yahata, Yoshihito, 4,061,164, Cl. 141-90.000.
Sakurada, Hikaru: *See—*
  Matsushita, Kunichi; Sakurada, Hikaru; and Onuma, Kazuhiko, 4,061,596, Cl. 252-463.000.
Sakurada, Nobuaki: *See—*
  Murakami, Hiroyashu; Ito, Tadashi; Ito, Fumio; Sakurada, Nobuaki; Kawamura, Mashaharu; and Shinoda, Nobuhiko, 4,062,022, Cl. 354-38.000.
Salensky, George Anthony: *See—*
  Berger, Sidney Ethan; and Salensky, George Anthony, 4,061,503, Cl. 106-300.000.
Salman, Naif D.: *See—*
  Motley, David M.; Salman, Naif D.; and Cheng, King Y., 4,061,978, Cl. 325-324.000.
Salmin, Valery Vasilievich: *See—*
  Paton, Boris Evgenievich; Medovar, Boris Izrailevich; Baglai, Vitaly Mikhailovich; Latash, Jury Vadimovich; Emelyanenko, July Georgievich; Stupak, Leonid Mikhailovich; Alferov, Jury Fedorovich; Bondarenko, Oleg Petrovich; Schupak, Grigory Bentsionovich; Shuruev, Lev Andreevich; Khasin, Kim Moiseevich; Frolov, Jury Fedorovich; Salmin, Valery Vasilievich; Lugovsky, Vladimir Ivanovich; Marjuschenko, Vilen Fedorovich; Shaburov, Fedor Fedorovich; Schelkunov, Jury Andreevich, deceased; and Schelkunova, Margarita Petrovna, administratrix. 4,061,180, Cl. 164-252.000.

Salomon, Georges Pierre Joseph. Safety arrangement for a ski. 4,061,356, Cl. 280-605.000.
Salomon, Georges Pierre Joseph. Ski binding having a releasable boot plate provided with a ski brake. 4,061,357, Cl. 280-605.000.
Samuel Moore and Company: *See—*
  Snow, John P., 4,061,407, Cl. 339-75.00P.
Samuels, Peter B.; and Wood, Ernest C. Arterial graft device. 4,061,134, Cl. 128-1.00R.
Sandoz, Inc.: *See—*
  Nadelson, Jeffrey, 4,061,778, Cl. 424-330.000.
  Tuttle, Glenn L., 4,061,142, Cl. 128-214.00R.
Sandoz Ltd.: *See—*
  Dorner, Friedrich; Scriba, Marianne; and Weil, Rudolf, 4,061,538, Cl. 195-29.000.
  Kunzle, Franz Martin, 4,061,752, Cl. 424-250.000.
Sandring, Albert W., to Butler Manufacturing Company. Maintenance platform for a building roof. 4,060,944, Cl. 52-43.000.
Sandt, Clayton. Kinesitherapeutic bed structure. 4,061,137, Cl. 128-33.000.
Sanford Research Institute: *See—*
  Taenzer, Jon C., 4,061,415, Cl. 350-6.000.
Sankyo Company Limited: *See—*
  Murayama, Keisuke; Morimura, Syoji; Yoshioka, Takao; and Kurumada, Tomoyuki, 4,061,616, Cl. 260-45.80N.
Sanner, George E. Sprinkler flow control systems having continuous cycle timer and associated apparatus disposed in a hermetically sealed housing. 4,061,893, Cl. 200-38.00D.
Sanshin Kagaku Kogyo Company, Limited: *See—*
  Kawaoka, Yutaka; Kifune, Tatsuo; Teshima, Masahiko; and Koizumi, Tatsuya, 4,061,646, Cl. 260-306.000.
Sarantakis, Dimitrois, to American Home Products Corporation. Arg ^{4}-somatostatin and analogues thereof. 4,061,608, Cl. 260-8.000.
Sasaki, Hiromichi, to Kabushiki Kaisha Fuji Seisakusho. Data retrieving device. 4,060,919, Cl. 40-104.00A.
Sato, Fumio; Sakamoto, Teruo; Watashiro, Seiichi; Inoue, Hayao; and Yahata, Yoshihito, to Shionogi & Co., Ltd. Powder filling machine. 4,061,164, Cl. 141-90.000.
Sato, Isao: *See—*
  Miyatani, Kazuo; and Sato, Isao, 4,061,555, Cl. 204-242.000.
Sato, Tsutomu, to Sony Corporation. Radio receiver with plural converters and frequency control. 4,061,980, Cl. 325-419.000.
Sato, Yo, to Kabushiki Kaisha Sato Kenkyusho. Composite label strip for use with label applying apparatus. 4,061,808, Cl. 428-42.000.
Satzinger, Gerhard; and Herrmann, Manfred Franz, to Warner-Lambert Company. Process for the preparation of 1-phenyl-4-aminocyclohex-2-ene-1-carboxylic acid esters and the salts thereof. 4,061,635, Cl. 544-172.000.
Saunders, Jim G.; and Stucki, Alfred B., to Thiokol Corporation. Telemetering system. 4,061,901, Cl. 235-92.0EV.
Sauter, Richard. Dowel pin with socket for the manufacture of dowel models in dental technology. 4,060,899, Cl. 32-11.000.
Sautter, Daniel C., to Pennsylvania Crusher Corporation. High-speed rotating crushing machinery. 4,061,279, Cl. 241-86.100.
Sawase, Yoko: *See—*
  Sugimoto, Isao; and Sawase, Yoko, 4,061,744, Cl. 424-243.000.
Sawko, Paul M.; and Riccitiello, Salvatore R., to United States of America, National Aeronautics and Space Administration. Intumescent coatings containing 4,4′-dinitrosulfanilide. 4,061,579, Cl. 252-8.100.
Sawyer, Elbert Morgan. Personal rapid transit system. 4,061,089, Cl. 104-23.0FS.
Say, Donald L.: *See—*
  Hallett, Joseph L.; and Say, Donald L., 4,061,941, Cl. 313-414.000.
Scaggs, Lee E.: *See—*
  Tallent, Michael W.; Scaggs, Lee E.; Swain, Allan L.; Harrison, Ronnie M.; and Hendershot, William B., III, 4,062,041, Cl. 358-8.000.
Scammell, Gerald W.: *See—*
  Solomons, Gerald L.; and Scammell, Gerald W., 4,061,781, Cl. 426-60.000.
Schaaf, Siegfried, to Inventa AG fur Forschung und Patentverwertung. Copolyamide dispersions and methods of making and using same. 4,061,619, Cl. 260-29.20N.
Schafer, Werner; Busch, Wolfram; Wallhausser, Hermann; Richter, Manfred; and Wilhelm, Siegfried, to Rutgerswerke Aktiengesellschaft. Molded articles. 4,061,710, Cl. 264-300.000.
Schall, Roger, to Lohr-Construction de Vehicules Industriels S.A. Elevating assembly for the upper platform of a road transport vehicle carrier. 4,061,390, Cl. 296-1.00A.
Schallus, Erich; Mietens, Gerhard; Fucker, Gregor; Petrell, Jurgen; and Dorn, Friedrich Wilhelm, to Hoechst Aktiengesellschaft. Process of conductive carbon black for use in depolarization masses in dry batteries. 4,061,719, Cl. 423-445.000.
Schamper, Thomas J.: *See—*
  Dasher, George F.; O'Cull, Kathleen A.; and Schamper, Thomas J., 4,061,150, Cl. 132-7.000.
Schattmaier, Kurt, to Contraves AG. Surgical chair for a doctor. 4,061,304, Cl. 248-404.000.
Schaub, Robert Eugene: *See—*
  Floyd, Middleton Brawner, Jr.; McGahren, William James; Schaub, Robert Eugene; and Weiss, Martin Joseph, 4,061,672, Cl. 260-514.00D.
Schelkunov, Jury Andreevich, deceased: *See—*
  Paton, Boris Evgenievich; Medovar, Boris Izrailevich; Baglai, Vitaly Mikhailovich; Latash, Jury Vadimovich; Emelyanenko, July Georgievich; Stupak, Leonid Mikhailovich; Alferov, Jury Fedorovich; Bondarenko, Oleg Petrovich; Schupak, Grigory Bentsionovich; Shuruev, Lev Andreevich; Khasin, Kim Moiseevich; Frolov, Jury Fedorovich; Salmin, Valery Vasilievich; Lugovsky, Vladimir Ivanovich; Marjuschenko, Vilen Fedorovich; Shaburov, Fedor Fedorovich; Schelkunov, Jury Andreevich, deceased; and Schelkunova, Margarita Petrovna, administratrix, 4,061,180, Cl. 164-252.000.
Schelkunova, Margarita Petrovna, administratrix: *See—*
  Paton, Boris Evgenievich; Medovar, Boris Izrailevich; Baglai, Vitaly Mikhailovich; Latash, Jury Vadimovich; Emelyanenko, July Georgievich; Stupak, Leonid Mikhailovich; Alferov, Jury Fedorovich; Bondarenko, Oleg Petrovich; Schupak, Grigory Bentsionovich; Shuruev, Lev Andreevich; Khasin, Kim Moiseevich; Frolov, Jury Fedorovich; Salmin, Valery Vasilievich; Lugovsky, Vladimir Ivanovich; Marjuschenko, Vilen Fedorovich; Shaburov, Fedor Fedorovich; Schelkunov, Jury Andreevich, deceased; and Schelkunova, Margarita Petrovna, administratrix, 4,061,180, Cl. 164-252.000.
Scherberich, Paul: *See—*
  Asinger, Friedrich; Pfeifer, Wolf-Dieter; Offermanns, Heribert; Scherberich, Paul; and Schreyer, Gerd, 4,061,674, Cl. 260-534.00S.
Schering Aktiengesellschaft: *See—*
  Arndt, Friedrich; and Plum, Hans, 4,061,491, Cl. 71-92.000.
  Nusslein, Ludwig; Pieroh, Ernst Albrecht; and Roder, Kurt, 4,061,645, Cl. 260-302.0SD.
  Wiechert, Rudolf; Kerb, Ulrich; and Engelfried, Otto, 4,061,661, Cl. 260-397.450.
Scherrer, Hanspeter; and Boller, Arthur, to Hoffmann-La Roche Inc. Liquid crystalline cinnamic acid esters. 4,061,587, Cl. 252-299.000.
Schick, Jean-Francois, to Societe Goro. Fastener for conveyor belts or bands. 4,060,877, Cl. 24-33.00B.
Schlangen, Ronald F. Ceramic tile cutting apparatus. 4,061,126, Cl. 125-21.000.
Schlapfer, Hans: *See—*
  Kormany, Geza; Kabas, Guglielmo; Schlapfer, Hans; and Siegrist, Adolf Emil, 4,061,860, Cl. 542-462.000.
Schlegel Engineering GmbH: *See—*
  Hammer, Heiner I., 4,061,519, Cl. 156-244.000.
Schleppnik, Alfred A., to Monsanto Company. Cis-2-methyl-oct-5-en-2-yl acetate. 4,061,667, Cl. 560-261.000.
Schmader, Richard W. Input section of apparatus for use in the continuous production of doughnuts. 4,061,314, Cl. 366-145.000.
Schmanski, Donald W.; and Rose, Thomas J. Roadway delineator. 4,061,435, Cl. 404-10.000.
Schmidt, Ernest J., Jr.; Rinehart, Michael G.; and Blevins, Bascom D., to Dayco Corporation. Skateboard. 4,061,350, Cl. 280-87.04A.
Schmitz, Louis S. Minnow dipper. 4,060,923, Cl. 43-4.000.
Schneehage, Hans Henning: *See—*
  Ohlinger, Manfred; Schoenafinger, Eduard; Vaeth, Guenter; Stritzinger, Heinz; Koester, Eberhard; Schneehage, Hans Henning; and Steck, Werner, 4,061,726, Cl. 423-634.000.
Schneerson, Moshe. Apparatus for removing drinking straws from bottles. 4,061,236, Cl. 214-309.000.
Schneider, Hans: *See—*
  Weiler, Herbert; Schneider, Hans; Von Janecek, Wolfgang; and Weyrich, Ludwin, 4,060,911, Cl. 34-5.000.
Schneider, Horst: *See—*
  Mundus, Friedhelm; and Schneider, Horst, 4,061,458, Cl. 425-392.000.
Schneider, Walter: *See—*
  Ohlinger, Manfred; Schoenafinger, Eduard; Schneider, Walter; Stritzinger, Heinz; and Vaeth, Guenter, 4,061,725, Cl. 423-634.000.
Schoenafinger, Eduard: *See—*
  Ohlinger, Manfred; Schoenafinger, Eduard; Schneider, Walter; Stritzinger, Heinz; and Vaeth, Guenter, 4,061,725, Cl. 423-634.000.
  Ohlinger, Manfred; Schoenafinger, Eduard; Vaeth, Guenter; Stritzinger, Heinz; Koester, Eberhard; Schneehage, Hans Henning; and Steck, Werner, 4,061,726, Cl. 423-634.000.
  Vaeth, Guenter; Ohlinger, Manfred; Stritzinger, Heinz; Schoenafinger, Eduard; Wettstein, Eugen; and Guth, Wolfgang, 4,061,727, Cl. 423-634.000.
Scholkens, Bernward: *See—*
  Bartmann, Wilhelm; Kunstmann, Rudolf; Lerch, Ulrich; and Scholkens, Bernward, 4,061,766, Cl. 424-279.000.
Schreurs, Willy P., to GTE Sylvania Incorporated. Fluorescent lamp having zero back brightness. 4,061,946, Cl. 313-488.000.
Schreyer, Gerd: *See—*
  Asinger, Friedrich; Pfeifer, Wolf-Dieter; Offermanns, Heribert; Scherberich, Paul; and Schreyer, Gerd, 4,061,674, Cl. 260-534.00S.
Schroeder, Paul R.; and Proebsting, Robert J., to Mostek Corporation. Clock generator and delay stage. 4,061,933, Cl. 307-262.000.
Schroeder, Paul R.: *See—*
  Proebsting, Robert J.; and Schroeder, Paul R., 4,061,954, Cl. 320-1.000.

Proebsting, Robert J.; and Schroeder, Paul R., 4,061,999, Cl. 365-182.000.
Schroeter, Siegfried H.; and Olson, Daniel R., to General Electric Company. Urethanes of hydroxybenzotriazoles. 4,061,652, Cl. 260-308.00B.
Schroter, Herbert, to Hoechst Aktiengesellschaft. Apparatus for producing a developer medium for diazotype materials. 4,062,031, Cl. 354-299.000.
Schubert, Franz H.: *See—*
United States of America, National Aeronautics and Space Administration; Wynveen, Richard A.; Powell, James D.; and Schubert, Franz H., 4,061,570, Cl. 210-96.00M.
Schubert, Keith E.: *See—*
Swaniger, James R.; and Schubert, Keith E., 4,061,044, Cl. 74-31.000.
Schultz, William J.; and Smith, Samuel, to Minnesota Mining and Manufacturing Company. Process for prepolymers and products. 4,061,624, Cl. 260-79.30M.
Schupak, Grigory Bentsionovich: *See—*
Paton, Boris Evgenievich; Medovar, Boris Izrailevich; Baglai, Vitaly Mikhailovich; Latash, Jury Vadimovich; Emelyanenko, July Georgievich; Stupak, Leonid Mikhailovich; Alferov, Jury Fedorovich; Bondarenko, Oleg Petrovich; Schupak, Grigory Bentsionovich; Shuruev, Lev Andreevich; Khasin, Kim Moiseevich; Frolov, Jury Fedorovich; Salmin, Valery Vasilievich; Lugovsky, Vladimir Ivanovich; Marjuschenko, Vilen Fedorovich; Shaburov, Fedor Fedorovich; Schelkunov, Jury Andreevich, deceased; and Schelkunova, Margarita Petrovna, administratrix, 4,061,180, Cl. 164-252.000.
Schwartz, Hermann, to Peyer, Siegfried. Method and apparatus to monitor thread spinning operation of open end spinning machines and effective thread stop motion. 4,060,965, Cl. 57-34.00R.
Schwartz, William Henry: *See—*
Reimers, Fred Alan; Beckmann, Robert Martin; Burzynski, William Arthur; Tomlinson, Dennis Eugene; and Schwartz, William Henry, 4,061,973, Cl. 325-17.000.
Schwartzberg, Abraham. Impact absorbing bumper. 4,061,385, Cl. 293-71.00P.
Schwarzbeck, Andreas Michael: *See—*
Seiler, Fritz; and Schwarzbeck, Andreas Michael, 4,061,537, Cl. 195-1.700.
Schwarze, Werner; Merk, Wolfgang; and Binder, Volker, to Deutsche Gold- und Silber-Scheideanstalt vormals Roessler; and Henkel U. Cie. Antistatic agent for thermoplastic synthetic resin. 4,061,869, Cl. 526-1.000.
Scott, Charles E., to P. R. Mallory & Co. Inc. Solid-state delay timed switching circuit. 4,062,007, Cl. 340-309.100.
Scott & Fetzer Co., The: *See—*
Woolley, Lee A., 4,061,936, Cl. 310-41.000.
Scriba, Marianne: *See—*
Dorner, Friedrich; Scriba, Marianne; and Weil, Rudolf, 4,061,538, Cl. 195-29.000.
Scull, Harvey Ronald, to Bell Telephone Laboratories, Incorporated. Apparatus for magnetic tape head alignment. 4,062,047, Cl. 360-26.000.
Sea Tank Co. S.A.: *See—*
Lacroix, Roger; and Lepere, Claude, 4,060,995, Cl. 61-92.000.
Seagull Industries, Inc.: *See—*
Biron, Richard D., 4,061,573, Cl. 210-282.000.
Sebulsky, Raynor T.: *See—*
McKinney, Joel Drexler; Sebulsky, Raynor T.; and Wynne, Francis Edmund, Jr., 4,061,562, Cl. 208-61.000.
Sedlacek, Pavel; and Hajek, Jiri, to Ceskoslovenska akademie ved. Method and apparatus for generating a continuous magnetic field determining the position of an inductive sensing element therein. 4,061,966, Cl. 324-207.000.
Sedlak, Vaclav: *See—*
Pospisil, Frantisek; and Sedlak, Vaclav, 4,060,882, Cl. 29-132.000.
Seiko Koki Kabushiki Kaisha: *See—*
Kitai, Kiyoshi; Nakamura, Yukio; Kato, Shogo; and Nagaoka, Shinji, 4,062,029, Cl. 354-232.000.
Seiler, Fritz; and Schwarzbeck, Andreas Michael, to Behringwerke Aktiengesellschaft. Polyionic isotonic salt solution. 4,061,537, Cl. 195-1.700.
Sekisui Kaseihin Kogyo Kabushiki Kaisha: *See—*
Matsui, Takashi, 4,060,958, Cl. 53-37.000.
Sekiya, Fukuo: *See—*
Natori, Minoru; Hatuse, Toshikazu; Kawanobe, Kouhei; Ogawa, Hiroshi; Sekiya, Fukuo; Ebihara, Heihachiro; and Uchino, Misao, 4,060,974, Cl. 58-23.00R.
Self, James M., to H. H. Robertson Company. Semisolid polymerizable compositions, method of preparing the same and thermoset products thereof. 4,061,613, Cl. 260-40.00R.
Self, James M., to H. H. Robertson Company. Semisolid polymerizable compositions, method of preparing the same and thermoset products thereof. 4,061,614, Cl. 260-40.00R.
Selleri, Renato: *See—*
Orzalesi, Giovanni; and Selleri, Renato, 4,061,668, Cl. 260-500.50H.
Sellstedt, John H., to American Home Products Corporation. Intermediates for producing semi-synthetic penicillins and cephalosporins and methods of production. 4,061,628, Cl. 260-239.100.
Selman, Gordon Leslie; and Midgley, Richard John, to Johnson, Matthey & Co., Limited. Platinum group metal-containing alloy. 4,061,495, Cl. 75-134.00F.
Semenenko, Jury Lukich. Rolls of a skewed-roll machine for trueing cylindrical metal articles. 4,061,008, Cl. 72-98.000.
Sendor, Bernard T.; and Sendor, Mortimer S. Paper welding apparatus for bookbinding machinery. 4,061,523, Cl. 156-380.000.
Sendor, Mortimer S.: *See—*
Sendor, Bernard T.; and Sendor, Mortimer S., 4,061,523, Cl. 156-380.000.
Senjo, Teizo; and Kobayashi, Makio, to Fuji Kasui Engineering Co., Ltd.; and Sumitomo Metal Industries, Ltd. Exhaust gas scrubbing process. 4,061,743, Cl. 423-235.000.
Sereda, Viktor Grigorievich: *See—*
Kaporovich, Vladimir Georgievich; Sereda, Viktor Grigorievich; Udovenko, Vitaly Kirillovich; Zelenskaya, Nadezhda Nikolaevna; Brazhnik, Viktor Yakovlevich; Sviridov, Evgeny Pavlovich; and Fabrichev, Jury Nikolaevich, 4,061,009, Cl. 72-69.000.
Servonied Arzei GmbH & Co. Pharma KG, Firma: *See—*
Wawretschek, Wolfgang; and Wawretschek, Lothar, 4,061,741, Cl. 424-232.000.
Seto, Kenneth Hon: *See—*
Thompson, James Thomas; and Seto, Kenneth Hon, 4,061,805, Cl. 428-31.000.
Shaburov, Fedor Fedorovich: *See—*
Paton, Boris Evgenievich; Medovar, Boris Izrailevich; Baglai, Vitaly Mikhailovich; Latash, Jury Vadimovich; Emelyanenko, July Georgievich; Stupak, Leonid Mikhailovich; Alferov, Jury Fedorovich; Bondarenko, Oleg Petrovich; Schupak, Grigory Bentsionovich; Shuruev, Lev Andreevich; Khasin, Kim Moiseevich; Frolov, Jury Fedorovich; Salmin, Valery Vasilievich; Lugovsky, Vladimir Ivanovich; Marjuschenko, Vilen Fedorovich; Shaburov, Fedor Fedorovich; Schelkunov, Jury Andreevich, deceased; and Schelkunova, Margarita Petrovna, administratrix, 4,061,180, Cl. 164-252.000.
Shakespeare Company: *See—*
Lindler, James Monroe; and Romanyszyn, Michael Taras, Jr., 4,061,806, Cl. 428-35.000.
Shakespeare, Keith James. Paper-winding units. 4,061,287, Cl. 242-67.10R.
Shaler, Amos J.; and McLean, Daniel C. Adsorbent body and method for making same. 4,061,807, Cl. 428-36.000.
Shaps, Spencer N. Adjustable tennis racquet. 4,061,333, Cl. 273-73.00E.
Sharma, Ram A.; Wright, Walter J.; and Murie, Richard A., to General Motors Corporation. Feedthrough assembly for lithium-iron sulfide cell. 4,061,841, Cl. 429-112.000.
Shaw, Herbert J., to United States of America, Navy. Apparatus for measuring rotation rates with acoustic waves. 4,061,040, Cl. 73-505.000.
Shaymar, Inc.: *See—*
Phillips, William W., 4,061,877, Cl. 179-1.00E.
Shearer, Robert: *See—*
Lerner, Stanley; and Shearer, Robert, 4,061,521, Cl. 156-265.000.
Shell Oil Company: *See—*
Meijs, Franciscus H.; and Davies, David R., 4,061,191, Cl. 166-292.000.
Nielsen, Robert P.; and Kilty, Peter A., 4,061,659, Cl. 260-348.340.
Powell, James E., 4,061,749, Cl. 424-246.000.
Wood, Derek A., 4,061,664, Cl. 260-465.00D.
Shen, Tsung-Ying; Jones, Howard; and Dorn, Conrad P., to Merck & Co., Inc. Ethenyl and ethynyl mercaptoalkyl pyridines. 4,061,759, Cl. 424-263.000.
Shenoy, Umakant Devdas, to DDSA Pharmaceuticals Ltd. Azeto [2,3-b][1,4] benzo diazepines. 4,061,745, Cl. 424-244.000.
Shepard, Kenneth L.; and Paleveda, William J., Jr., to Merck & Co., Inc. Tricyclicdicarboximides. 4,061,763, Cl. 424-274.000.
Sheppard, Richard H.: *See—*
Keller, Dale L., 4,061,059, Cl. 82-1.00C.
Sherman, Michael I.: *See—*
Laakso, Oliver A.; and Sherman, Michael I., 4,061,193, Cl. 162-19.000.
Sherwin-Williams Company, The: *See—*
Glowaky, Raymond Charles; Rudolph, Stephen Edward; and Bierwagen, Gordon Paul, 4,061,610, Cl. 260-17.4ST.
Glowaky, Raymond Charles; Rudolph, Stephen Edward; and Bierwagen, Gordon Paul, 4,061,611, Cl. 260-17.4ST.
Shibasaki, Mitsuru: *See—*
Matsushita, Takeshi; Hayashi, Hisao; and Shibasaki, Mitsuru, 4,062,034, Cl. 357-16.000.
Shields, James E., to Eli Lilly and Company. Somatostatin analogs and intermediates thereto. 4,061,607, Cl. 260-8.000.
Shields, James E., to Eli Lilly and Company. Somatostatin analogs and intermediates thereto. 4,061,626, Cl. 260-112.50S.
Shigemori, Youjiro; Mitumori, Yoshio; and Yonezawa, Toshiaki, to Star Seimitsu Kabushiki Kaisha. Magnetic card reader. 4,062,050, Cl. 360-30.000.
Shigeyoshi, Tuyoshi: *See—*
Nohtomi, Ryota; Sugiyama, Masayoshi; and Shigeyoshi, Tuyoshi, 4,061,707, Cl. 264-95.000.
Shimago, Kozo: *See—*
Yamada, Hirotada; Okamura, Kosaku; Tobiki, Hisao; Tanno, Norihiko; Shimago, Kozo; Nakagome, Takenari; Komatsu, Toshiaki; Izawa, Akio; Noguchi, Hiroshi; Irie, Kenji; and Eda, Yasuko, 4,061,748, Cl. 424-246.000.
Shimanuki, Fujio: *See—*
Kotezawa, Katsutaka; Onodera, Toshimi; Hayashi, Setsuo; and Shimanuki, Fujio, 4,062,016, Cl. 343-178.000.
Shimizu, Kazuyuki: *See—*
Yoshida, Toru; Hosoi, Kameo; Yoshida, Tokuzo; Shimizu, Kazuyuki; and Nakagawa, Koithiro, 4,060,913, Cl. 34-80.000.

Shimizu, Masami: *See—*
Tsunekawa, Tokuichi; Uchidoi, Masanori; Shimizu, Masami; Yamamichi, Masayoshi; Murayama, Keiya; and Aizawa, Hiroshi, 4,062,024, Cl. 354-60.00R.
Shimizu, Soichiro, to Tokyo Fabric Kogyo Kabushiki Kaisha. Water seal packing for sealing water at the coupling portion of underwater structures. 4,060,993, Cl. 61-43.000.
Shimojo, Nobuei: *See—*
Saito, Shunjiro; Aue, Kazuhide; and Shimojo, Nobuei, 4,061,558, Cl. 204-290.00F.
Shinoda, Nobuhiko: *See—*
Murakami, Hiroyashu; Ito, Tadashi; Ito, Fumio; Sakurada, Nobuaki; Kawamura, Mashaharu; and Shinoda, Nobuhiko, 4,062,022, Cl. 354-38.000.
Shinoda, Yoshio: *See—*
Kuno, Akira; and Shinoda, Yoshio, 4,061,023, Cl. 73-114.000.
Shionogi & Co., Ltd.: *See—*
Narisada, Masayuki, 4,061,854, Cl. 544-88.000.
Sato, Fumio; Sakamoto, Teruo; Watashiro, Seiichi; Inoue, Hayao; and Yahata, Yoshihito, 4,061,164, Cl. 141-90.000.
Yukinaga, Hisajiro; Kano, Hideo; and Ogata, Masaru, 4,061,490, Cl. 71-68.000.
Shipley Company Inc.: *See—*
Gulla, Michael, 4,061,588, Cl. 252-429.00R.
Shiraishi, Takeichi: *See—*
Kuroda, Nobuyuki; Shiraishi, Takeichi; Itoh, Akio; Matsuura, Kazuo; and Miyoshi, Mituji, 4,061,857, Cl. 526-114.000.
Short, Barrett John: *See—*
Nolan, John Howard; Goddard, Donald Lawrence; and Short, Barrett John, 4,061,535, Cl. 176-38.000.
Shuler, Bernard R., to American Air Filter Company, Inc. Ventilating air filtering and distributing device. 4,061,082, Cl. 98-40.00D.
Shultz, Gilbert F.; and Bailey, Ronald W., to Application Engineering Corporation. Water chiller control. 4,060,997, Cl. 62-180.000.
Shuruev, Lev Andreevich: *See—*
Paton, Boris Evgenievich; Medovar, Boris Izrailevich; Baglai, Vitaly Mikhailovich; Latash, Jury Vadimovich; Emelyanenko, July Georgievich; Stupak, Leonid Mikhailovich; Alferov, Jury Fedorovich; Bondarenko, Oleg Petrovich; Schupak, Grigory Bentsionovich; Shuruev, Lev Andreevich; Khasin, Kim Moiseevich; Frolov, Jury Fedorovich; Salmin, Valery Vasilievich; Lugovsky, Vladimir Ivanovich; Marjuschenko, Vilen Fedorovich; Shaburov, Fedor Fedorovich; Schelkunov, Jury Andreevich, deceased; and Schelkunova, Margarita Petrovna, administratrix, 4,061,180, Cl. 164-252.000.
Sickles, Ralph A. Rectilinear transport means. 4,061,232, Cl. 214-1.0BB.
Siebert, Larry D., to KMS Fusion, Inc. Laser fusion pulse shape controller. 4,061,985, Cl. 331-94.50C.
Siegal, Sanford: *See—*
Beer, Irwin B.; and Siegal, Sanford, 4,061,256, Cl. 224-5.00D.
Siegrist, Adolf Emil: *See—*
Kormany, Geza; Kabas, Guglielmo; Schlapfer, Hans; and Siegrist, Adolf Emil, 4,061,860, Cl. 542-462.000.
Siemens Aktiengesellschaft: *See—*
Aulich, Hubert; and Grabmaier, Josef, 4,061,484, Cl. 65-2.000.
Berglund, Kurt, 4,062,020, Cl. 346-33.00R.
Fettweis, Alfred, 4,061,905, Cl. 364-724.000.
Friebel, Eberhard, 4,061,032, Cl. 73-273.000.
Jager, Philipp, 4,061,838, Cl. 429-22.000.
Keller, Roman, 4,061,413, Cl. 339-95.00R.
Kessler, Heinrich Hubert, 4,061,928, Cl. 307-200.00B.
Kvaerna, Sverre; and Barud, Sigvard, 4,061,324, Cl. 269-325.000.
Niethammer, Dieter; and Paetsch, Werner, 4,061,997, Cl. 340-146.1AX.
Poensgen, Rudolf, 4,061,418, Cl. 350-160.0LC.
Politycki, Alfred, 4,061,814, Cl. 428-196.000.
Winstel, Guenter, 4,062,035, Cl. 357-17.000.
Wintzer, Klaus, 4,061,879, Cl. 179-15.0BA.
Zeidler, Guenter; and Auracher, Franz, 4,062,043, Cl. 358-86.000.
Zirwas, Johann Gerhard, 4,061,984, Cl. 330-149.000.
Siemer, Klaus: *See—*
Becker, Wolf-Jurgen; Breuer, Wolfram; and Siemer, Klaus, 4,061,467, Cl. 23-232.00R.
Sillion, Bernard: *See—*
Leleu, Gerard; Bedague, Pierre; and Sillion, Bernard, 4,061,581, Cl. 252-32.70E.
Simokat, Frank L., to TII Corporation. Multi-function fail-safe arrangements for overvoltage gas tubes. 4,062,054, Cl. 361-119.000.
Simon, Eli. Reaction products of benzenephosphonic acid and melamine as flame-retardant additives. 4,061,605, Cl. 260-2.5AJ.
Singleton, Thomas C., to Monsanto Company. Purification of acetic acid. 4,061,546, Cl. 203-31.000.
Sistig, Eberhard; and Reinermann, Karl-Heinz, to Chemische Werke Huls Aktiengesellschaft. Process for cooling a polymerization reactor. 4,061,848, Cl. 526-61.000.
Sitzmann, Michael E.: *See—*
Dacons, Joseph C.; and Sitzmann, Michael E., 4,061,658, Cl. 260-346.110.
Siukola, Matti Solmu Olavi: *See—*
Woodward, Oakley McDonald; and Siukola, Matti Solmu Olavi, 4,062,019, Cl. 343-797.000.
Sivilotti, Olivo Giuseppe, to Alcan Research and Development Limited. Apparatus and procedure for the belt casting of metal. 4,061,177, Cl. 164-87.000.
Sivilotti, Olivo Giuseppe; Steer, David Edward; and Stock, Thomas Adrian Cheetham, to Alcan Research and Development Limited. Continuous casting of metal strip between moving belts. 4,061,178, Cl. 164-87.000.
Sivilotti, Olivo Guiseppe: *See—*
Stock, Thomas Adrian Cheetham; Dougan, Patrick Daniel; and Sivilotti, Olivo Guiseppe, 4,061,010, Cl. 72-201.000.
Sivyer Steel Corporation: *See—*
Whitney, Richard P., 4,061,277, Cl. 241-73.000.
Sjoholm, Ingvar Gosta Holger; Lindmark, Nils Roger; and Ekman, Bo Magnus. Biologically active composition and the use thereof. 4,061,466, Cl. 23-230.00B.
Skachkova, Nina Andreevna: *See—*
Bart, Evgeny Vasilievich; Batalin, Oleg Efimovich; Troitsky, Andrian Petrovich; Skachkova, Nina Andreevna; Lebedev, Vladimir Mikhailovich; and Trifonova, Rimma Petrovna, 4,061,680, Cl. 260-606.000.
Skaggs, Leonard L. Water tender. 4,060,934, Cl. 47-79.000.
Skallerup, Robert M. Sighting device for relocation of site. 4,060,908, Cl. 33-275.00R.
Skidmore, Sam C., Jr. Method and apparatus for drilling in permafrost and the like. 4,061,197, Cl. 175-101.000.
Skinner, Charles A., to Electro-Therm, Inc. Terminal for a resistance heating element. 4,061,412, Cl. 339-263.00R.
Skyhook Sales Corporation: *See—*
Jacobsen, Arnold Ralph; and Jaffe, I. Pompe, 4,061,092, Cl. 108-149.000.
Slezak, Raymond J. Tire bead covering apparatus. 4,061,525, Cl. 156-460.000.
Sloan, Kenneth B.: *See—*
Bodor, Nicolae S.; and Sloan, Kenneth B., 4,061,753, Cl. 424-253.000.
Sloane, Edwin A.; and McKeever, Bruce T., to Time/Data Corporation. Structural analysis system. 4,061,017, Cl. 73-579.000.
Slusarchyk, William A.: *See—*
Dolfini, Joseph E.; Bohme, Ekkehard; and Slusarchyk, William A., 4,051,629, Cl. 260-239.100.
Sly, Gerald: *See—*
Magid, Robert P.; and Sly, Gerald, 4,061,820, Cl. 428-311.000.
Smal, Henri, to Societe Anonyme FACO. Twist prevention device. 4,061,381, Cl. 339-8.00P.
Smaw, Jesse B.: *See—*
Marcalus, Nicholas; and Smaw, Jesse B., 4,061,325, Cl. 270-40.000.
Smith, Charles A. Automatic chinchilla sander and cleaner. 4,061,111, Cl. 119-159.000.
Smith, Dale Maxwell. Aerosol dispenser ring. 4,061,249, Cl. 222-78.000.
Smith, Frank P. Automatic weapon. 4,061,075, Cl. 89-132.000.
Smith International Inc.: *See—*
Villaloboz, Arthur A., 4,061,376, Cl. 308-8.200.
Smith, Marvin W.: *See—*
Perkins, Donald W.; and Smith, Marvin W., 4,062,057, Cl. 363-71.000.
Smith, Robert, to General Motors Corporation. Cooling coil and air distribution system defrost means. 4,061,482, Cl. 62-155.000.
Smith, Samuel: *See—*
Schultz, William J.; and Smith, Samuel, 4,061,624, Cl. 260-79.30M.
Smith, Wilbur J. Clicker for indicating position of arrow. 4,061,107, Cl. 116-67.00R.
Smithgall, Harry E.: *See—*
DiDominico, Mario A.; and Smithgall, Harry E., 4,061,943, Cl. 313-482.000.
SmithKline Corporation: *See—*
Levine, Marshall S.; and Faulkner, Albert A., 4,061,108, Cl. 118-100.000.
Smulders, Adrianus Josephus: *See—*
de Jonge, Jan Hendrik; and Smulders, Adrianus Josephus, 4,061,908, Cl. 235-302.300.
Snam Progetti S.p.A.: *See—*
Gagliardi, Renzo, 4,061,675, Cl. 260-555.00A.
Snider, Grover E.: *See—*
Rackard, Troy D.; and Snider, Grover E., 4,060,950, Cl. 52-456.000.
Snow, John P., to Samuel Moore and Company. Electrical connector assembly. 4,061,407, Cl. 339-75.00P.
Snyder, Robert P.: *See—*
Harwood, William James; and Snyder, Robert P., 4,061,165, Cl. 144-1.00R.
Sobel, A. Theodore: *See—*
Zall, Robert R.; Sobel, A. Theodore; and Price, Donald R., 4,061,504, Cl. 134-95.000.
Societa Italo-Britannica L. Manetti - H. Roberts & C.: *See—*
Orzalesi, Giovanni; and Selleri, Renato, 4,061,668, Cl. 260-500.50H.
S.A. des Anciens Etablissements Paul Wurth: *See—*
Legille, Edouard, 4,061,036, Cl. 73-421.50A.
Societe Anonyme dite: L'Oreal: *See—*
Kalopissis, Gregoire; Bouillon, Claude; and Vayssie, Charles, 4,061,730, Cl. 424-59.000.
Societe Anonyme FACO: *See—*
Smal, Henri, 4,061,381, Cl. 339-8.00P.
Societe General de Constructions Electriques et Macaniques Alsthom: *See—*
Coulon, Andre; and Perrin, Rene, 4,060,883, Cl. 29-156.80R.
Societe Generale de Constructions Electriques et Mecaniques "Alsthom et Cie": *See—*
Chillier-Duchatel, Nicole; and Verger, Bernard, 4,061,554, Cl. 204-129.000.
Societe Goro: *See—*
Schick, Jean-Francois, 4,060,877, Cl. 24-33.00B.

Societe Nationale Elf Aquitaine: *See—*
Bernard, Jean-Rene; Bousquet, Jacques; and Grand, Michel, 4,061,690, Cl. 260-676.00R.
Solheim, Fredrick S.; and Erb, Lee A. Combustion monitoring system. 4,062,006, Cl. 340-228.00R.
Solin, Stuart A.: *See—*
Widran, Jerrold; and Solin, Stuart A., 4,061,135, Cl. 128-6.000.
Solli, Houk: *See—*
Madsen, Hans Berg; Holst, Preben Lindholm; and Solli, Houk, 4,061,757, Cl. 424-263.000.
Solomons, Gerald L.; and Scammell, Gerald W., to Ranks Hovis McDougall Limited. Edible protein substances composed of fungal mycellium. 4,061,781, Cl. 426-60.000.
Solvay & Cie.: *See—*
Verlaeten, Jean; and Demilie, Paul, 4,061,718, Cl. 423-356.000.
Somm, Paul T., to Boeing Company, The. Shock absorbing method and apparatus. 4,061,295, Cl. 244-104.0FP.
Sommerkamp, Peter; and Heil, Walter, to Leybold-Heraeus GmbH & Co. KG. Electron gun for heating, melting and vaporizing purposes, with deflection systems. 4,061,871, Cl. 13-31.000.
Somoano, Robert B.: *See—*
Hadek, Vaclav; Somoano, Robert B.; and Rembaum, Alan, 4,061,834, Cl. 428-522.000.
Sony Corporation: *See—*
Kitamura, Tomosaburo, 4,061,816, Cl. 428-218.000.
Kuroda, Nobukazu, 4,061,509, Cl. 148-31.550.
Matsushita, Takeshi; Hayashi, Hisao; and Shibasaki, Mitsuru, 4,062,034, Cl. 357-16.000.
Sato, Tsutomu, 4,061,980, Cl. 325-419.000.
Suzuki, Kunizo, 4,062,033, Cl. 357-15.000.
Suzuki, Tadao, 4,061,983, Cl. 330-207.00P.
Sopha, Klaus, to Robert Bosch G.m.b.H. Electrohydraulic control system. 4,061,155, Cl. 137-85.000.
Souza, Lawrence C.: *See—*
Frye, Burton L.; Pittman, Max G.; Runge, David A.; Souza, Lawrence C.; and LaVoie, Raymond V., 4,061,480, Cl. 55-356.000.
Spence-Bate, Harry Arthur Hele. Method and apparatus for microform updating. 4,062,025, Cl. 354-76.000.
Spencer, Edward: *See—*
Spencer, Frederick J.; and Spencer, Edward, 4,061,203, Cl. 182-214.000.
Spencer, Frederick J.; and Spencer, Edward, to Spencer Tool & Mfg. Co. Inc. Ladder attachment. 4,061,203, Cl. 182-214.000.
Spencer Tool & Mfg. Co. Inc.: *See—*
Spencer, Frederick J.; and Spencer, Edward, 4,061,203, Cl. 182-214.000.
Spencer Wright Industries, Inc.: *See—*
Price, Herbert Benjamin, 4,061,095, Cl. 112-79.00R.
Sponseller, David R.: *See—*
Fabris, Hubert J.; Gruber, David P.; Sponseller, David R.; and Uelzmann, Heinz, 4,061,845, Cl. 526-11.100.
Sprague, Peter W., to E. R. Squibb & Sons, Inc. 3,6-Dicarboximidamidecarbazoles. 4,061,655, Cl. 260-315.000.
Spurles, Louise Leone: *See—*
Price, Edgar Elmer; and Spurles, Louise Leone, 4,061,419, Cl. 350-184.000.
Stahl, Roy Layton. Auxiliary wheel assembly. 4,061,349, Cl. 280-47.200.
Stahlecker, Fritz; and Stahlecker, Hans. Guide track arrangement and method of adjusting the same. 4,060,963, Cl. 57-1.00R.
Stahlecker, Hans: *See—*
Stahlecker, Fritz; and Stahlecker, Hans, 4,060,963, Cl. 57-1.00R.
Standard Oil Company (Indiana): *See—*
Poppe, Wassily; and Fielding, Ivor R., 4,061,835, Cl. 428-522.000.
Stanley, Alexander J.: *See—*
Pinto, Albert A.; and Stanley, Alexander J., 4,061,081, Cl. 93-53.0SD.
Stanley, Henry; and Ray-Chaudhuri, Dilip K., to National Starch and Chemical Corporation. Process for preparing stable polyurethane latices. 4,061,618, Cl. 260-29.2TN.
Star Seimitsu Kabushiki Kaisha: *See—*
Shigemori, Youjiro; Mitumori, Yoshio; and Yonezawa, Toshiaki, 4,062,050, Cl. 360-30.000.
Starp, Franz, to Carl Zeiss Stiftung. Interchangeable lens retaining means for photographic cameras. 4,062,030, Cl. 354-286.000.
Start S.p.A. Studi Apparecchiature e Ricerche Tecniche: *See—*
Fasano, Osvaldo, 4,061,210, Cl. 188-79.50P.
Stastny, Fritz; Gaeth, Rudolf; Haardt, Udo; and Koerner, Heinz-Hermann, to BASF Aktiengesellschaft. Manufacture of soft and resilient foams. 4,061,701, Cl. 264-51.000.
Statt, Wayne H.: *See—*
Miller, Carl W.; Vandenberg, Lester C.; and Statt, Wayne H., 4,061,709, Cl. 264-293.000.
Ste Anonyme Dite Brasseries Kron Enbourg: *See—*
Noel, Jean Pierre; and Bauer, Gilbert, 4,061,016, Cl. 73-60.100.
Steck, Werner: *See—*
Ohlinger, Manfred; Schoenafinger, Eduard; Vaeth, Guenter; Stritzinger, Heinz; Koester, Eberhard; Schneehage, Hans Henning; and Steck, Werner, 4,061,726, Cl. 423-634.000.
Steckel, Thomas Frier, to Lubrizol Corporation, The. Phenoxide-halo carboxylic acid condensate additives for fuels. 4,061,474, Cl. 44-66.000.
Steer, David Edward: *See—*
Sivilotti, Olivo Giuseppe; Steer, David Edward; and Stock, Thomas Adrian Cheetham, 4,061,178, Cl. 164-87.000.
Steetley (Mfg.) Limited: *See—*
Randle, Raymond Thomas, 4,061,575, Cl. 210-350.000.
Steidle, Wallace C. Apparatus and method for the farming of clams. 4,061,110, Cl. 119-4.000.
Stein, Robert George: *See—*
Crovetti, Aldo Joseph; and Stein, Robert George, 4,061,764, Cl. 424-275.000.
Stern, Donald J.; and Allsop, Jon I., to Allsop Automatic Inc. Shock-absorbing ski pole grip. 4,061,347, Cl. 280-11.37H.
Stetson, Karl A.; and Agren, Carl Hugo. Stringed instrument with an improved back plate construction. 4,061,068, Cl. 84-275.000.
Stevens, Everett Earle: *See—*
Litva, John; and Stevens, Everett Earle, 4,062,015, Cl. 343-120.000.
Stevenson, George J.: *See—*
Austin, Stephen R.; and Stevenson, George J., 4,061,237, Cl. 214-515.000.
Stewart, Joseph H., Jr.: *See—*
Dutton, Frederick O., III; and Stewart, Joseph H., Jr., 4,061,517, Cl. 156-212.000.
Stewart, Roger Green, to RCA Corporation. Current mirror amplifier augumentation of regulator transistor current flow. 4,061,962, Cl. 323-22.00R.
Stewart, William James, to Plessey Handel und Investments A.G. Optical fibre connector. 4,061,416, Cl. 350-96.00C.
Stiles, John Callender. Electrostatic rate gyroscope. 4,061,043, Cl. 74-5.60D.
Stock, Thomas Adrian Cheetham; Dougan, Patrick Daniel; and Sivilotti, Olivo Guiseppe, to Alcan Research and Development Limited. Apparatus for cooling the rolls of rolling mills. 4,061,010, Cl. 72-201.000.
Stock, Thomas Adrian Cheetham: *See—*
Sivilotti, Olivo Giuseppe; Steer, David Edward; and Stock, Thomas Adrian Cheetham, 4,061,178, Cl. 164-87.000.
Stocker, Phillip J.: *See—*
United States of America, National Aeronautics and Space Administration; Stocker, Phillip J.; and Marcus, Harris L., 4,061,427, Cl. 356-159.000.
Storey, Curtis B. Hand-warming and liquid-heating device. 4,061,128, Cl. 126-210.000.
Strange, Delbert D.; and Hunts, Ronald M., to Manufacturing Approaches & Total Concepts, Inc. Pilot hole borer. 4,061,437, Cl. 408-42.000.
Strickman, Melvyn B.: *See—*
Strickman, Robert L.; and Strickman, Melvyn B., 4,061,144, Cl. 128-227.000.
Strickman, Robert L.; and Strickman, Melvyn B. Disposable syringe. 4,061,144, Cl. 128-227.000.
Stritzinger, Heinz: *See—*
Ohlinger, Manfred; Schoenafinger, Eduard; Schneider, Walter; Stritzinger, Heinz; and Vaeth, Guenter, 4,061,725, Cl. 423-634.000.
Ohlinger, Manfred; Schoenafinger, Eduard; Vaeth, Guenter; Stritzinger, Heinz; Koester, Eberhard; Schneehage, Hans Henning; and Steck, Werner, 4,061,726, Cl. 423-634.000.
Vaeth, Guenter; Ohlinger, Manfred; Stritzinger, Heinz; Schoenafinger, Eduard; Wettstein, Eugen; and Guth, Wolfgang, 4,061,727, Cl. 423-634.000.
Strok, Jack M., Jr., to General Electric Company. Low noise sodium vapor lamp for sonic pulse operation. 4,061,939, Cl. 313-25.000.
Strong, W. Albert, to PPG Industries, Inc. Hydrogen peroxide stabilization with phenylphosphonic acids. 4,061,721, Cl. 423-272.000.
Strugatz, Arthur. Process for mass-producing works of art made from wooden strips. 4,061,514, Cl. 156-63.000.
Strycker, Wallace Glenn: *See—*
Havera, Herbert John; and Strycker, Wallace Glenn, 4,061,760, Cl. 424-267.000.
Stubbs, Rex G., Jr.: *See—*
Clark, Anthony W.; and Stubbs, Rex G., Jr., 4,061,442, Cl. 417-36.000.
Stucki, Alfred B.: *See—*
Saunders, Jim G.; and Stucki, Alfred B., 4,061,901, Cl. 235-92.0EV.
Stupak, Leonid Mikhailovich: *See—*
Paton, Boris Evgenievich; Medovar, Boris Izrailevich; Baglai, Vitaly Mikhailovich; Latash, Jury Vadimovich; Emelyanenko, July Georgievich; Stupak, Leonid Mikhailovich; Alferov, Jury Fedorovich; Bondarenko, Oleg Petrovich; Schupak, Grigory Bentsionovich; Shuruev, Lev Andreevich; Khasin, Kim Moiseevich; Frolov, Jury Fedorovich; Salmin, Valery Vasilievich; Lugovsky, Vladimir Ivanovich; Marjuschenko, Vilen Fedorovich; Shaburov, Fedor Fedorovich; Schelkunov, Jury Andreevich, deceased; and Schelkunova, Margarita Petrovna, administratrix, 4,061,180, Cl. 164-252.000.
Suarez, Diego Rolando, to Inter-American Transport Equipment Company. Vehicle with side dumping mechanism over the top rail. 4,061,235, Cl. 214-64.000.
Sue, Takaji: *See—*
Fujimoto, Sakae; Sue, Takaji; and Misawa, Toshihiko, 4,061,328, Cl. 271-10.000.
Sugai, Tetuya, to Nippon Steel Corporation. Receiver for pulses of different widths. 4,061,975, Cl. 325-322.000.
Sugai, Tetuya, to Nippon Steel Corporation. Receivers for pulses of different widths. 4,061,976, Cl. 325-322.000.
Sugimoto, Isao; and Sawase, Yoko, to Kanebo, Ltd. Stable preparation of water-soluble salts of dehydroepiandrosterone sulfate for parenteral administration. 4,061,744, Cl. 424-243.000.
Sugiyama, Masayoshi: *See—*
Nohtomi, Ryota; Sugiyama, Masayoshi; and Shigeyoshi, Tuyoshi, 4,061,707, Cl. 264-95.000.

Sukornick, Bernard: *See—*
Minhas, Pritam Singh; and Sukornick, Bernard, 4,061,810, Cl. 428-85.000.
Sullivan, Daniel J.: *See—*
Bradley, Robert L.; and Sullivan, Daniel J., 4,061,344, Cl. 277-26.000.
Sullivan, Richard N.; and Vance, John E., to Garrett Corporation, The. Gearbox decoupler. 4,061,216, Cl. 192-46.000.
Sumitomo Chemical Company, Limited: *See—*
Itoh, Iko; Inoue, Yasuhiko; and Nagaöka, Kenji, 4,061,844, Cl. 526-4.000.
Yamada, Hirotada; Okamura, Kosaku; Tobiki, Hisao; Tanno, Norihiko; Shimago, Kozo; Nakagome, Takenari; Komatsu, Toshiaki; Izawa, Akio; Noguchi, Hiroshi; Irie, Kenji; and Eda, Yasuko, 4,061,748, Cl. 424-246.000.
Sumitomo Electric Industries, Ltd.: *See—*
Nishiyama, Yukinori, 4,061,208, Cl. 188-71.900.
Sumitomo Metal Industries, Ltd.: *See—*
Senjo, Teizo; and Kobayashi, Makio, 4,061,743, Cl. 423-235.000.
Summers, Jack C., to General Motors Corporation. Stabilization of calcium oxide sulfate trapping materials. 4,061,593, Cl. 252-443.000.
Sumrell, Gene: *See—*
Mod, Robert R.; Magne, Frank C.; Sumrell, Gene; and Novak, Arthur F., 4,061,634, Cl. 544-158.000.
Sundstrom, Nils Eskil, to AB Westin & Backlund. Position regulator. 4,061,080, Cl. 92-13.200.
Sunjara, Sime: *See—*
Murray, John S.; and Sunjara, Sime, 4,061,898, Cl. 219-211.000.
Suzuki, Kunizo, to Sony Corporation. Schottky barrier type semiconductor device. 4,062,033, Cl. 357-15.000.
Suzuki, Nobukazu: *See—*
Yokokawa, Takao; Kanazawa, Shogo; Otoguro, Yasuo; Suzuki, Nobukazu; Akase, Sigeyuki; Miida, Noboru; Akazawa, Tadahisa; and Kuroiwa, Kazuya, 4,061,494, Cl. 75-124.000.
Suzuki, Seigo; and Moriya, Yoshiaki, to Tokyo Shibaura Electric Co., Ltd. Information processing system. 4,062,059, Cl. 364-200.000.
Suzuki, Tadao, to Sony Corporation. Transistor amplifier with protective circuit. 4,061,983, Cl. 330-207.00P.
Svensson, Hugo Ragnvald: *See—*
Karlsson, Jarding Urban; and Svensson, Hugo Ragnvald, 4,061,288, Cl. 242-84.10K.
Sviridov, Evgeny Pavlovich: *See—*
Kaporovich, Vladimir Georgievich; Sereda, Viktor Grigorievich; Udovenko, Vitaly Kirillovich; Zelenskaya, Nadezhda Nikolaevna; Brazhnik, Viktor Yakovlevich; Sviridov, Evgeny Pavlovich; and Fabrichev, Jury Nikolaevich, 4,061,009, Cl. 72-69.000.
Swain, Allan L.: *See—*
Tallent, Michael W.; Scaggs, Lee E.; Swain, Allan L.; Harrison, Ronnie M.; and Hendershot, William B., III, 4,062,041, Cl. 358-8.000.
Swain, Samuel J. Combinational fireplace unit. 4,061,133, Cl. 126-350.00R.
Swaniger, James R.; and Schubert, Keith E., to Pitney-Bowes, Inc. Meter setting indexing gear apparatus. 4,061,044, Cl. 74-31.000.
Swanson, James P.: *See—*
Kindgren, Lee; and Swanson, James P., 4,061,064, Cl. 83-368.000.
Swanson, William C.: *See—*
Orth, Harold R.; and Swanson, William C., 4,061,079, Cl. 91-372.000.
Swartzentruber, Glenn A.: *See—*
Roantree, James P.; and Swartzentruber, Glenn A., 4,062,004, Cl. 340-187.000.
Swiss Aluminium Limited: *See—*
Miller, Larry J.; Miller, Marion V.; and Liebetrau, Richard E., 4,060,935, Cl. 49-25.000.
Sydnor, Richard L.: *See—*
United States of America, National Aeronautics and Space Administration; Sydnor, Richard L.; and MacConnell, John W., 4,061,974, Cl. 325-58.000.
Symons, Cedric Brian; and Symons, Kenneth Brian. Trailer suspension. 4,061,363, Cl. 280-718.000.
Symons, Kenneth Brian: *See—*
Symons, Cedric Brian; and Symons, Kenneth Brian, 4,061,363, Cl. 280-718.000.
Systems Using Nature Ltd.: *See—*
Finigan, George D.; May, Brian E.; and Zaininger, Henry W., 4,060,916, Cl. 35-10.000.
Sze, Morgan C., to Lummus Company, The. Molten salt lift gas system for production of chlorinated hydrocarbons. 4,061,471, Cl. 23-260.000.
Szkrybalo, William, to Hoffmann-La Roche Inc. Abscission compositions. 4,061,489, Cl. 71-88.000.
Tada, Tetsuya. Depress button type sprayer. 4,061,250, Cl. 222-321.000.
Taenzer, Jon C., to Sanford Research Institute. Nutating radiation deflecting method and apparatus. 4,061,415, Cl. 350-6.000.
Tai, Wun Ten; Mura, Lawrence A.; Phillips, Kenneth G.; and Ballweber, Edward G., to Nalco Chemical Company. Phosphate esters. 4,061,695, Cl. 260-929.000.
Taiyo Kaken Company, Ltd.: *See—*
Murakami, Heiichiro; and Okamoto, Tsuneo, 4,061,477, Cl. 55-79.000.
Tajbl, Franz: *See—*
Gillitzer, Max; and Tajbl, Franz, 4,061,899, Cl. 219-131.00R.
Takada, Juichiro, to Takata Kojyo Co., Ltd. Seat belt buckle. 4,060,879, Cl. 24-230.00A.
Takahashi, Sasuke. Apparatus for stopping and releasing the movement of a sliding up-and-down pole of a portable motion picture screen stand. 4,061,300, Cl. 248-125.000.
Takahashi, Tomio: *See—*
Nomura, Hirokazu; Tohno, Katsumi; and Takahashi, Tomio, 4,061,262, Cl. 228-50.000.
Takasago Thermal Engineering Co., Ltd: *See—*
Yoshida, Toru; Hosoi, Kameo; Yoshida, Tokuzo; Shimizu, Kazuyuki; and Nakagawa, Koithiro, 4,060,913, Cl. 34-80.000.
Takase, Hideo; Ishii, Toyota; and Nishiumi, Shiro, to Toray Industries Inc. Antistatic carpet and production thereof. 4,061,811, Cl. 428-95.000.
Takata Kojyo Co., Ltd: *See—*
Takada, Juichiro, 4,060,879, Cl. 24-230.00A.
Takei, Akira: *See—*
Togei, Ryoiku; Takei, Akira; and Wada, Kunihiko, 4,062,037, Cl. 357-24.000.
Takeshita, Tomon, to Toyota Jidosha Kogyo Kabushiki Kaisha. Exhaust gas recirculation apparatus for an internal combustion engine. 4,061,119, Cl. 123-119.00A.
Talbot, James Richard, to Fiber Industries Inc. Simulated spun-like bulked yarn. 4,060,970, Cl. 57-140.00R.
Tallent, Michael W.; Scaggs, Lee E.; Swain, Allan L.; Harrison, Ronnie M.; and Hendershot, William B., III, to Consolidated Video Systems, Inc. Input voltage controlled oscillator circuit for a television signal time base corrector. 4,062,041, Cl. 358-8.000.
Tamabayashi, Hanzo: *See—*
Katsuragawa, Kanzi; Hattori, Tatsuo; Kihara, Keiichi; and Tamabayashi, Hanzo, 4,061,669, Cl. 260-505.00N.
Tanabe Seiyaku Co., Ltd.: *See—*
Miyoshi, Munetsugu; Matsumoto, Kazuo; Urabe, Yuji; and Iwasaki, Tameo, 4,061,650, Cl. 260-307.00F.
Tanaka, Sadaharu; Saito, Sadayuki; and Hirano, Sensaburo, to United States Steel Corporation. Mobile truck for relining a converter. 4,061,319, Cl. 266-281.000.
Tanbara, Masakazu: *See—*
Hoshino, Kazuo; and Tanbara, Masakazu, 4,061,211, Cl. 188-79.50P.
Tannahill, Alex L.: *See—*
Finn, Robert K.; Tannahill, Alex L.; and Laptewicz, Joseph E., Jr., 4,061,585, Cl. 252-89.00R.
Tanno, Norihiko: *See—*
Yamada, Hirotada; Okamura, Kosaku; Tobiki, Hisao; Tanno, Norihiko; Shimago, Kozo; Nakagome, Takenari; Komatsu, Toshiaki; Izawa, Akio; Noguchi, Hiroshi; Irie, Kenji; and Eda, Yasuko, 4,061,748, Cl. 424-246.000.
Tanouchi, Tadao: *See—*
Hayashi, Masaki; Tanouchi, Tadao; Ito, Hiroyuki; and Ohyama, Isao, 4,061,865, Cl. 560-121.000.
Taradaiko, Alexandr Korneevich: *See—*
Lifshits, Viktor Senderovich; Petrov, Georgy Nikolaevich; Pappkov, Oleg Sergeevich; Khomenko, Vladimir Ivanovich; Gerasimenko, Alexandr Yakovlevich; Taradaiko, Alexandr Korneevich; Zemchenko, Alexandr Mikhailovich; and Gremyakov, Ivan Petrovich, 4,061,078, Cl. 90-24.00C.
Tasseron, Frans A. W., to Koninklijke Emballage Industrie Van Leer B.V. Closure for a container. 4,061,239, Cl. 215-221.000.
Taylor, David W.: *See—*
Peterson, Philip R.; Taylor, David W.; and Levijoki, Wayne A., 4,061,402, Cl. 303-92.000.
Peterson, Philip R.; and Taylor, David W., 4,061,403, Cl. 303-106.000.
Taylor, Dennis O.: *See—*
Rajasekaran, Ramanujam; Taylor, Dennis O.; and Whittlesey, James W., 4,061,187, Cl. 165-107.000.
Taylor, Gary Newton, to Bell Telephone Laboratories, Incorporated. Negative resist for X-ray and electron beam lithography and method of using same. 4,061,829, Cl. 428-451.000.
Taylor, Leonard Harold, to Perkin-Elmer Limited. Ink recorder with grooved pressure roller feed. 4,062,021, Cl. 346-136.000.
Taylor, Robert T. Decoration platform assembly. 4,061,306, Cl. 248-523.000.
Taylor, William T.: *See—*
Keller, V. J.; and Taylor, William T., 4,061,389, Cl. 294-86.300.
TDK Electronics Co., Ltd.: *See—*
Saito, Shunjiro; Aue, Kazuhide; and Shimojo, Nobuei, 4,061,558, Cl. 204-290.00F.
Tecumseh Products Company: *See—*
MacLeod, John Norman, 4,061,121, Cl. 123-149.00R.
Tecumseh Products Company (Compressor): *See—*
Kandpal, Tara, 4,061,935, Cl. 310-68.00C.
Tefft, Edward G.: *See—*
Kennedy, Richard W.; and Tefft, Edward G., 4,061,510, Cl. 148-187.000.
Telefonaktiebolaget L M Ericsson: *See—*
Widl, Walter Herbert Erwin, 4,061,881, Cl. 179-15.0BF.
Ternehall, Runo Roy Oskar, to AB Volvo. Hydrodynamic brake device for motor vehicles. 4,061,214, Cl. 188-277.000.
Teshima, Masahiko: *See—*
Kawaoka, Yutaka; Kifune, Tatsuo; Teshima, Masahiko; and Koizumi, Tatsuya, 4,061,646, Cl. 260-306.000.
Teufel, Hermann; Bartmann, Wilhelm; Granzer, Ernold; and Musil, Josef, to Hoechst Aktiengesellschaft. Derivatives of the 1,2-diarylethylene and pharmaceutical compositions thereof. 4,061,772, Cl. 424-304.000.

- Teufel, Hermann: *See—*
  - Beck, Gerhard; Kunstmann, Rudolf; Babej, Milos; and Teufel, Hermann, 4,061,671, Cl. 260-514.00D.
- Tex-Tube Division of Detroit Steel Corporation: *See—*
  - Lloyd, Donald, 4,061,960, Cl. 323-9.000.
- Texaco Inc.: *See—*
  - Arnold, George B., 4,060,988, Cl. 60-641.000.
  - Jones, Henry B.; and Bunn, Dorrance P., Jr., 4,061,162, Cl. 138-147.000.
  - Love, Richard F.; and Duranleau, Roger G., 4,061,651, Cl. 260-307.00H.
- Texas Instruments Incorporated: *See—*
  - Brewer, Terry L., 4,061,799, Cl. 427-43.000.
  - McElroy, David Joal, 4,061,506, Cl. 148-1.500
- Textron Inc.: *See—*
  - Moertel, George B., 4,060,886, Cl. 29-410.000.
- Tezuka, Nobuo; Uchidoi, Masanori; Iura, Yukio; Watanabe, Satoshi; Yamamichi, Masayoshi; and Aizawa, Hiroshi, to Canon Kabushiki Kaisha. Single reflex camera. 4,062,028, Cl. 354-152.000.
- Thermoplastice Processes Inc.: *See—*
  - Hessenthaler, Herbert C., 4,061,461, Cl. 425-462.000.
- Thiokol Corporation: *See—*
  - Bertozzi, Eugene R.; Hoffman, Robert F.; and Barclay, Robert, 4,061,612, Cl. 260-31.40R.
  - Saunders, Jim G.; and Stucki, Alfred B., 4,061,901, Cl. 235-92.0EV.
- Thomas, Charles B.: *See—*
  - Ryan, Arthur B.; and Thomas, Charles B., 4,060,881, Cl. 407-22.000.
- Thomas, Ralph D.; and Nagle, William J., to United States of America, National Aeronautics and Space Administration. Multi-cell battery protection system. 4,061,955, Cl. 320-6.000.
- Thompson, James Thomas; and Seto, Kenneth Hon, to Protective Treatments, Inc. Pressure sensitive adhesive strips and sheets. 4,061,805, Cl. 428-31.000.
- Thompson, Joseph A. Vehicular energy generation system. 4,061,200, Cl. 180-66.00B.
- Thompson, Wallace T. Multiple frequency band antenna. 4,062,017, Cl. 343-722.000.
- Thomson-CSF: *See—*
  - Raverdy, Yvan; and Ploix, Jean Luc, 4,062,009, Cl. 340-324.00R.
- Thornwald, Everett D., to Aerwey Laboratories, Inc. Humidifier-nebulizer apparatus. 4,061,698, Cl. 261-78.00A.
- Thykeson, Audrae. Heating pad. 4,061,897, Cl. 219-211.000.
- TII Corporation: *See—*
  - Simokat, Frank L., 4,062,054, Cl. 361-119.000.
- Time Computer, Inc.: *See—*
  - O'Connor, Arthur H.; and McCullough, Robert E., 4,060,971, Cl. 58-4.00A.
- Time/Data Corporation: *See—*
  - Sloane, Edwin A.; and McKeever, Bruce T., 4,061,017, Cl. 73-579.000.
- Tinholt, Thomas H., to Eaton Corporation. Fluid coupling device and bimetal coil for use therein. 4,061,218, Cl. 192-58.00B.
- Tobe, Akihiro: *See—*
  - Kikumoto, Ryoji; Tobe, Akihiro; and Ikoma, Hidenobu, 4,061,776, Cl. 424-330.000.
- Tobiki, Hisao: *See—*
  - Yamada, Hirotada; Okamura, Kosaku; Tobiki, Hisao; Tanno, Norihiko; Shimago, Kozo; Nakagome, Takenari; Komatsu, Toshiaki; Izawa, Akio; Noguchi, Hiroshi; Irie, Kenji; and Eda, Yasuko, 4,061,748, Cl. 424-246.000.
- Tobin, Charles R.: *See—*
  - Kashmer, James C.; and Tobin, Charles R., 4,061,160, Cl. 137-637.200.
- Toft, David: *See—*
  - Brooksbank, Wallace Ronald; and Toft, David, 4,061,803, Cl. 427-323.000.
- Togei, Ryoiku; Takei, Akira; and Wada, Kunihiko, to Fujitsu Limited. Semiconductor memory device. 4,062,037, Cl. 357-24.000.
- Tohno, Katsumi: *See—*
  - Nomura, Hirokazu; Tohno, Katsumi; and Takahashi, Tomio, 4,061,262, Cl. 228-50.000.
- Toko, Inc.: *See—*
  - Inokuchi, Takahiro, 4,061,992, Cl. 333-73.00R.
- Tokyo Fabric Kogyo Kabushiki Kaisha: *See—*
  - Shimizu, Soichiro, 4,060,993, Cl. 61-43.000.
- Tokyo Shibaura Electric Co., Ltd.: *See—*
  - Matsumoto, Mitsuo, 4,061,953, Cl. 318-573.000.
  - Suzuki, Seigo; and Moriya, Yoshiaki, 4,062,059, Cl. 364-200.000.
- Tolan, John R., to Milliken Research Corporation. Adjustable traverse tire belt winding apparatus. 4,061,524, Cl. 156-397.000.
- Tomlinson, Dennis Eugene: *See—*
  - Reimers, Fred Alan; Beckmann, Robert Martin; Burzynski, William Arthur; Tomlinson, Dennis Eugene; and Schwartz, William Henry, 4,061,973, Cl. 325-17.000.
- Tomlinson, Thomas Clifford: *See—*
  - Goslin, John Keith; and Tomlinson, Thomas Clifford, 4,061,148, Cl. 131-23.00R.
- Tomy Kogyo Co., Inc.: *See—*
  - Kanno, Hideyuki, 4,061,334, Cl. 273-126.00A.
- Tonne, Ronald Ray: *See—*
  - Campbell, Roy E.; Lawrence, John B.; and Tonne, Ronald Ray, 4,061,481, Cl. 62-29.000.
- Toosbuy, Karl-Heinz Werner: *See—*
  - Last, Werner, 4,061,199, Cl. 180-8.00A.
- Toray Industries Inc.: *See—*
  - Takase, Hideo; Ishii, Toyota; and Nishiumi, Shiro, 4,061,811, Cl. 428-95.000.
- Toyo Rubber Industry Co., Ltd., The: *See—*
  - Yoshida, Akira; Kubo, Taketoshi; Yamajo, Mashayuki; and Ishigaki, Masahiro, 4,061,172, Cl. 152-379.100.
- Toyo Soda Manufacturing Co., Ltd.: *See—*
  - Katsuragawa, Kanzi; Hattori, Tatsuo; Kihara, Keiichi; and Tamabayashi, Hanzo, 4,061,669, Cl. 260-505.00N.
- Toyoda, Kenji, to Nippon Kogaku K.K. Light measuring and indicating circuit. 4,061,431, Cl. 356-227.000.
- Toyota, Hiroshi; Nagatome, Kenji; and Kawamoto, Tamio, to Nissan Motor Co., Ltd. Clutch actuating apparatus controlled by accelerator. 4,061,217, Cl. 192-.052.
- Toyota Jidosha Kogyo Kabushiki Kaisha: *See—*
  - Horie, Koji; and Mune, Takashi, 4,061,098, Cl. 113-116.00Q.
  - Kato, Shinji, 4,061,447, Cl. 418-142.000.
  - Konishi, Masami; and Futamura, Kazumasa, 4,060,982, Cl. 60-282.000.
  - Sakamaki, Hiroshi; Maeda, Toshiyuki; Sakai, Toshimitsu; and Saitou, Tadashi, 4,061,446, Cl. 418-133.000.
  - Takeshita, Tomon, 4,061,119, Cl. 123-119.00A.
  - Ueda, Masahiro, 4,061,088, Cl. 102-28.00R.
- Traise, John E., to Moore Business Forms, Inc. Apparatus for applying patches to a continuous web. 4,061,527, Cl. 156-519.000.
- Traister, Robert L.: *See—*
  - Batchelor, Phillip J.; Traister, Robert L.; Gray, Gary A.; and Marino, Joseph A., 4,062,061, Cl. 364-900.000.
- Transit Products Company, Inc.: *See—*
  - Hixson, Richard M., 4,061,269, Cl. 238-17.000.
- Trautmann, Gunther, to Index-Werke KG Hahn & Tessky. Automatic multispindle turning lathe. 4,061,060, Cl. 82-3.000.
- Trefimetaux: *See—*
  - Moreau, Marc, 4,061,508, Cl. 148-128.000.
- Trego, Allen Thomas: *See—*
  - Anderson, John Dale; Buller, Richard James; and Trego, Allen Thomas, 4,060,961, Cl. 56-294.000.
- Trifonova, Rimma Petrovna: *See—*
  - Bart, Evgeny Vasilievich; Batalin, Oleg Efimovich; Troitsky, Andrian Petrovich; Skachkova, Nina Andreevna; Lebedev, Vladimir Mikhailovich; and Trifonova, Rimma Petrovna, 4,061,680, Cl. 260-606.000.
- Troitsky, Andrian Petrovich: *See—*
  - Bart, Evgeny Vasilievich; Batalin, Oleg Efimovich; Troitsky, Andrian Petrovich; Skachkova, Nina Andreevna; Lebedev, Vladimir Mikhailovich; and Trifonova, Rimma Petrovna, 4,061,680, Cl. 260-606.000.
- Trost, Wilfried: *See—*
  - Madaus, Rolf Hermann Heinrich; Halbach, Gunter; and Trost, Wilfried, 4,061,765, Cl. 424-278.000.
- Trotter, George H. Bowstring positioning device. 4,061,125, Cl. 124-24.00R.
- TRW Inc.: *See—*
  - Petrelis, Peter G., 4,061,989, Cl. 333-7.00R.
- Tseluiko, Jury Ivanovich: *See—*
  - Andoniev, Sergei Mikhailovich; Granovsky, Boris Ruvimovich; Golod, Leonid Davydovich; Kudinov, Gennady Alexandrovich; Kasyanov, Grigory Ivanovich; Filipiev, Oleg Vladimirovich; Tseluiko, Jury Ivanovich; and Lysenko, Evgeny Eliseevich, 4,061,317, Cl. 266-193.000.
- Tsubakinoto Chain Company: *See—*
  - Yamasaki, Akitosi; Fukuyama, Kiyoshi; and Miyauchi, Kazunori, 4,061,311, Cl. 254-168.000.
- Tsujimoto, Kayoshi: *See—*
  - Kobori, Toshio; Tsujimoto, Kayoshi; Nanba, Yasuhiro; and Yamada, Seiji, 4,062,023, Cl. 354-38.000.
- Tsunekawa, Tokuichi; Uchidoi, Masanori; Shimizu, Masami; Yamamichi, Masayoshi; Murayama, Keiya; and Aizawa, Hiroshi, to Canon Kabushiki Kaisha. Control system consisting of semi-conductor integrated circuits for a camera. 4,062,024, Cl. 354-60.00R.
- Tucker, John A. Combination container with removable closure. 4,061,244, Cl. 220-310.000.
- Tucker, Lee Everett: *See—*
  - Dunn, James Knox, III; Tucker, Lee Everett; and Redman, Andrew Paul, 4,061,167, Cl. 144-34.00E.
- Tupper, David Edward: *See—*
  - Chakrabarti, Jiban Kumar; Hotten, Terrence Michael; and Tupper, David Edward, 4,061,774, Cl. 424-325.000.
- Turner, Brian Maurice: *See—*
  - Duffield, Peter Roe; Flockton, Peter Robin; Lillis, Rupert Martin; Turner, Brian Maurice; and Crowell, Donald Edward, 4,061,706, Cl. 264-90.000.
- Turner, Mervyn Edward Dennant, to Imperial Chemical Industries Limited. Process for separating an acid from a gaseous mixture. 4,061,714, Cl. 423-220.000.
- Tuttle, Glenn L., to Sandoz, Inc. Apparatus for controlling blood flow. 4,061,142, Cl. 128-214.00R.
- Tyco Filters Division, Inc.: *See—*
  - Bottom, Virgil E.; and Christian, Robert E., 4,060,888, Cl. 29-628.000.
- Tyler, Wesley R.: *See—*
  - Deffeyes, Robert J.; and Tyler, Wesley R., 4,061,824, Cl. 428-328.000.

- Uchidoi, Masanori: *See—*
  - Tezuka, Nobuo; Uchidoi, Masanori; Iura, Yukio; Watanabe, Satoshi; Yamamichi, Masayoshi; and Aizawa, Hiroshi, 4,062,028, Cl. 354-152.000.
  - Tsunekawa, Tokuichi; Uchidoi, Masanori; Shimizu, Masami; Yamamichi, Masayoshi; Murayama, Keiya; and Aizawa, Hiroshi, 4,062,024, Cl. 354-60.00R.
- Uchino, Misao: *See—*
  - Natori, Minoru; Hatuse, Toshikazu; Kawanobe, Kouhei; Ogawa, Hiroshi; Sekiya, Fukuo; Ebihara, Heihachiro; and Uchino, Misao, 4,060,974, Cl. 58-23.00R.
- Udovenko, Vitaly Kirillovich: *See—*
  - Kaporovich, Vladimir Georgievich; Sereda, Viktor Grigorievich; Udovenko, Vitaly Kirillovich; Zelenskaya, Nadezhda Nikolaevna; Brazhnik, Viktor Yakovlevich; Sviridov, Evgeny Pavlovich; and Fabrichev, Jury Nikolaevich, 4,061,009, Cl. 72-69.000.
- Ueda, Masahiro, to Toyota Jidosha Kogyo Kabushiki Kaisha. Electric detonating fuse assembly. 4,061,088, Cl. 102-28.00R.
- Uelzmann, Heinz: *See—*
  - Fabris, Hubert J.; Gruber, David P.; Sponseller, David R.; and Uelzmann, Heinz, 4,061,845, Cl. 526-11.100.
- Ueno, Tomoki, to Matsushita Electric Industrial Co., Ltd. Frequency combining circuit. 4,061,990, Cl. 333-10.000.
- UFI Engineering & Manufacturing Co., Inc.: *See—*
  - Miksitz, Frank J., 4,061,246, Cl. 222-1.000.
- Ugine Aciers: *See—*
  - Chave, Henri, 4,061,433, Cl. 403-359.000.
- Uncle Ben's of Australia Pty. Ltd.: *See—*
  - Warren, Gregory Noel, 4,061,789, Cl. 426-250.000.
- Unelec S.A.: *See—*
  - Hennemann, Jean, 4,061,993, Cl. 335-20.000.
- Union Carbide Canada Limited: *See—*
  - Gosling, Lincoln John; and Fraser, Graham, 4,060,875, Cl. 17-1.00F.
- Union Carbide Corporation: *See—*
  - Berger, Sidney Ethan; and Salensky, George Anthony, 4,061,503, Cl. 106-300.000.
  - Grose, Robert William; and Flanigen, Edith Marie, 4,061,724, Cl. 423-335.000.
  - Higgins, Thomas Engel, 4,061,787, Cl. 426-140.000.
  - Kiyonaga, Kazuo, 4,061,487, Cl. 65-135.000.
  - Lindbergh, Jon M., 4,061,387, Cl. 294-26.000.
  - Moore, Arthur William; Volk, Herbert Franz; and Merrow, Jack Kenneth, 4,061,600, Cl. 252-510.000.
- Uniroyal, Ltd.: *See—*
  - Washburn, Owen Victor; Kouvarellis, Georgeos Konstandenos; and Ferguson, William Alexander, 4,061,565, Cl. 210-32.000.
- United Air Specialists, Inc.: *See—*
  - Baker, Forester C., 4,061,961, Cl. 323-21.000.
- United Kingdom Atomic Energy Authority: *See—*
  - Green, Derek, deceased; and Green, Muriel Irene, executrix, 4,061,011, Cl. 72-262.000.
  - Jackson, George Oliver, 4,061,534, Cl. 176-37.000.
- United States of America
  - Agriculture: *See—*
    - Cary, John W.; and Heinemann, William H., Jr., 4,061,094, Cl. 111-89.000.
    - Franklin, William E.; Madacsi, John P.; and Rowland, Stanley P., 4,061,465, Cl. 8-185.000.
    - Geimer, Robert L.; and Lehmann, William F., 4,061,813, Cl. 428-183.000.
    - Mod, Robert R.; Magne, Frank C.; Sumrell, Gene; and Novak, Arthur F., 4,061,634, Cl. 544-158.000.
  - Army: *See—*
    - Chew, William M.; Ayers, Orval E.; Murfree, James A.; and Martignoni, Pasquale, 4,061,512, Cl. 149-22.000.
    - Evans, David G., 4,061,842, Cl. 429-116.000.
    - Hanson, Charles M., 4,060,996, Cl. 62-6.000.
    - Jamison, Howard M., 4,061,426, Cl. 356-138.000.
    - Johnson, Curtis D.; McFarland, Larry C.; and Antwiler, Lonnie D., 4,061,074, Cl. 89-33.0CA.
    - King, Gerard J.; and Martino, Joseph F., Jr., 4,061,916, Cl. 250-332.000.
  - Energy Research and Development Administration: *See—*
    - Creagan, Robert J.; and Frisch, Erling, 4,061,536, Cl. 176-78.000.
  - Energy Research & Development Administration: *See—*
    - Cantrell, Cyrus D.; Carbone, Robert J.; and Cooper, Ralph S., 4,061,921, Cl. 250-423.00P.
  - National Aeronautics and Space Administration; administrator; with respect to an invention of:
    - Grunbaum, Benjamin W. Automatic multiple-sample applicator and electrophoresis apparatus. 4,061,561, Cl. 204-299.00R.
    - Mateer, George C.; and Brosh, Aviel. Flow separation detector. 4,061,029, Cl. 73-180.000.
    - Stocker, Phillip J.; and Marcus, Harris L. Laser extensometer. 4,061,427, Cl. 356-159.000.
    - Sydnor, Richard L.; and MacConnell, John W. Ultra stable frequency distribution system. 4,061,974, Cl. 325-58.000.
    - Wynveen, Richard A.; Powell, James D.; and Schubert, Franz H. Iodine generator for reclaimed water purification. 4,061,570, Cl. 210-96.00M.
    - Zuckerwar, Allan J. Differential sound level meter. 4,061,041, Cl. 73-646.000.
  - National Aeronautics and Space Administration: *See—*
    - Baehr, Edward F.; and Burnett, James E., 4,061,146, Cl. 128-305.000.
    - Bell, Charles H., 4,061,577, Cl. 250-199.000.
    - Bloomfield, Harvey S., 4,061,190, Cl. 166-259.000.
    - Gilwee, William J., Jr.; and Parker, John A., 4,061,812, Cl. 428-117.000.
    - Hadek, Vaclav; Somoano, Robert B.; and Rembaum, Alan, 4,061,834, Cl. 428-522.000.
    - Hsu, Li-Chen, 4,061,856, Cl. 544-193.000.
    - Sawko, Paul M.; and Riccitiello, Salvatore R., 4,061,579, Cl. 252-8.100.
    - Thomas, Ralph D.; and Nagle, William J., 4,061,955, Cl. 320-6.000.
  - Navy: *See—*
    - Baczuk, Robert J., 4,061,511, Cl. 149-19.900.
    - Colbert, Richard P.; Dimitriou, George; Jones, Max E.; and Haberman, Jack I., 4,062,012, Cl. 343-7.00A.
    - Dacons, Joseph C.; and Sitzmann, Michael E., 4,061,658, Cl. 260-346.110.
    - Frye, Burton L.; Pittman, Max G.; Runge, David A.; Souza, Lawrence C.; and LaVoie, Raymond V., 4,061,480, Cl. 55-356.000.
    - Haynes, Leonard S., 4,062,058, Cl. 364-200.000.
    - Perkins, Donald W.; and Smith, Marvin W., 4,062,057, Cl. 363-71.000.
    - Shaw, Herbert J., 4,061,040, Cl. 73-505.000.
- U.S. Philips Corporation: *See—*
  - de Jonge, Jan Hendrik; and Smulders, Adrianus Josephus, 4,061,908, Cl. 235-302.300.
  - Mollendorf, Ralf; and Lux, Peter, 4,061,920, Cl. 250-413.000.
  - Roberts, Edward D., 4,061,832, Cl. 428-500.000.
  - Rothgordt, Ulf; Ehlers, Bernd; Bunge, Ernst; and Piotrowski, Herbert, 4,062,014, Cl. 340-347.0DD.
- United States Steel Corporation: *See—*
  - Tanaka, Sadaharu; Saito, Sadayuki; and Hirano, Sensaburo, 4,061,319, Cl. 266-281.000.
  - Wandrisco, Joseph M., 4,061,270, Cl. 238-107.000.
- United Technologies Corporation: *See—*
  - Elsaesser, Fred L.; and Hall, Joseph H., 4,060,979, Cl. 60-39.030.
  - Elsaesser, Fred L.; and Hall, Joseph H., 4,060,980, Cl. 60-39.030.
  - Goodfriend, Harvey J.; Mercik, Henry J., Jr.; and Armstrong, Lee R., 4,061,026, Cl. 73-116.000.
  - Roantree, James P.; and Swartzentruber, Glenn A., 4,062,004, Cl. 340-187.000.
  - Willenbecher, James F.; and Armstrong, Lee R., 4,061,025, Cl. 73-116.000.
- Universite de Sherbrooke: *See—*
  - Adoul, Jean-Pierre; and Daaboul, Fouad, 4,061,878, Cl. 179-1.0SC.
- University of California, The Regents of the: *See—*
  - Fridley, Robert B.; Chen, Pictiaw; Mehlschau, James J.; and Claypool, Lawrence L., 4,061,020, Cl. 73-81.000.
- UOP Inc.: *See—*
  - Hilfman, Lee, 4,061,563, Cl. 208-111.000.
  - Morgan, Kenneth A.; and Frame, Robert R., 4,061,711, Cl. 423-67.000.
  - Morgan, Kenneth A.; and Miller, Marilyn, 4,061,712, Cl. 423-67.000.
  - Ryu, Ji-Yong; and Germanas, Dalia, 4,061,689, Cl. 260-671.00R.
- Upjohn Company, The: *See—*
  - Axen, Udo F., 4,061,866, Cl. 560-121.000.
  - Hall, Charles M.; and Wright, John B., 4,061,791, Cl. 424-304.000.
  - Lin, Chiu-Hong, 4,061,665, Cl. 260-410.90R.
  - Lin, Chiu-Hong, 4,061,666, Cl. 560-53.000.
  - Onder, Besir K., 4,061,622, Cl. 260-78.00R.
  - Onder, Besir K., 4,061,623, Cl. 260-78.0TF.
  - Poole, Robert E. J., Jr., 4,061,815, Cl. 428-215.000.
  - Robert, Andre, 4,061,742, Cl. 424-234.000.
  - Van Rheenen, Verlan H., 4,061,657, Cl. 260-343.30P.
- Urabe, Yuji: *See—*
  - Miyoshi, Munetsugu; Matsumoto, Kazuo; Urabe, Yuji; and Iwasaki, Tameo, 4,061,650, Cl. 260-307.00F.
- Uraneck, Carl A.: *See—*
  - Brown, James D.; and Uraneck, Carl A., 4,061,638, Cl. 260-270.00P.
- Urech, Jakob, to Ciba-Geigy Corporation. Virtually solvent-free crystal form of the sodium salt of Cephacetril. 4,061,853, Cl. 544-30.000.
- USM Corporation: *See—*
  - Axvig, Maynard Arnold; and Franco, Jose Asuncion, 4,060,868, Cl. 10-72.00R.
- Utah Research and Development Company: *See—*
  - Brown, Lowell K.; Newman, William Albert; and Boyd, William A., 4,061,956, Cl. 320-22.000.
- Uzgiris, Egidijus E.: *See—*
  - Bean, Charles P.; King, Roy J., Jr.; and Uzgiris, Egidijus E., 4,061,543, Cl. 195-103.50K.
- Vaeth, Guenter; Ohlinger, Manfred; Stritzinger, Heinz; Schoenafinger, Eduard; Wettstein, Eugen; and Guth, Wolfgang, to BASF Aktiengesellschaft. Manufacture of γ-iron(III) oxide. 4,061,727, Cl. 423-634.000.
- Vaeth, Guenter: *See—*
  - Ohlinger, Manfred; Schoenafinger, Eduard; Schneider, Walter; Stritzinger, Heinz; and Vaeth, Guenter, 4,061,725, Cl. 423-634.000.
  - Ohlinger, Manfred; Schoenafinger, Eduard; Vaeth, Guenter; Stritzinger, Heinz; Koester, Eberhard; Schneehage, Hans Henning; and Steck, Werner, 4,061,726, Cl. 423-634.000.

Vahl, Hasso G.: *See—*
Burroughs, Viola F.; Vahl, Hasso G.; and Wahl, Harro W. D., 4,061,518, Cl. 156-232.000.
van Ackeren, Joseph; and Helm, Edward J., to Koppers Company, Inc. Apparatus for providing waste gas recirculation in coke oven batteries. 4,061,544, Cl. 202-141.000.
Vance, John E.: *See—*
Sullivan, Richard N.; and Vance, John E., 4,061,216, Cl. 192-46.000.
Vandenberg, Lester C.: *See—*
Miller, Carl W.; Vandenberg, Lester C.; and Statt, Wayne H., 4,061,709, Cl. 264-293.000.
Vanderbush, James J.: *See—*
Pelletier, Ronald R.; Hansen, Robert D.; and Vanderbush, James J., 4,061,833, Cl. 428-511.000.
van der Does, Lucas, to N.V. Optische Industrie "de Oude Delft". Receptacle for radiographic film material. 4,061,923, Cl. 250-468.000.
van der Gaag, Leonard C.; and Pacheco, Luciano, to Versatile Integrated Modules. Method and apparatus for measuring radiation from a plurality of light sources. 4,061,925, Cl. 250-553.000.
Van Hook, Danny Allen, to International Business Machines Corporation. Media skew compensator. 4,060,907, Cl. 33-184.500.
Vaniglia, Giuseppe. Portable washer and massager apparatus for bathtubs. 4,061,136, Cl. 128-24.100.
Van Peteghem, Antoine: *See—*
De Schepper, Achille; and Van Peteghem, Antoine, 4,061,564, Cl. 210-21.000.
Van Poucke, Raphael Karel: *See—*
Monbaliu, Marcel Jacob; Mannens, Marc Godfried; Van Poucke, Raphael Karel; Credner, Hans-Heinrich; and Meier, Ernst, 4,061,498, Cl. 96-100.00R.
Van Rheenen, Verlan H., to Upjohn Company, The. Process for preparing a 2(R) or 2(S) tricyclic lactone glycol. 4,061,657, Cl. 260-343.30P.
Vayssie, Charles: *See—*
Kalopissis, Gregoire; Bouillon, Claude; and Vayssie, Charles, 4,061,730, Cl. 424-59.000.
Veda, Inc.: *See—*
Richardson, James L., 4,061,273, Cl. 239-172.000.
Velsicol Chemical Corporation: *See—*
Krenzer, John, 4,061,648, Cl. 260-306.80D.
Vereinigte Edelstahlwerke Aktiengesellschaft (VEW): *See—*
Jaeger, Heimo, 4,061,493, Cl. 75-10.00C.
Verger, Bernard: *See—*
Chillier-Duchatel, Nicole; and Verger, Bernard, 4,061,554, Cl. 204-129.000.
Verlaeten, Jean; and Demilie, Paul, to Solvay & Cie. Method for the recovery of ammonia from liquor from the filters of ammonia-soda plants. 4,061,718, Cl. 423-356.000.
Vernaleken, Hugo: *See—*
Margotte, Dieter; and Vernaleken, Hugo, 4,061,691, Cl. 260-860.000.
Versatile Integrated Modules: *See—*
van der Gaag, Leonard C.; and Pacheco, Luciano, 4,061,925, Cl. 250-553.000.
Vetter, Manfred. Lifting cushion for the lifting, supporting and moving of heavy objects. 4,061,310, Cl. 254-93.0HP.
Victor Company of Japan, Limited: *See—*
Kayanuma, Kanji, 4,061,950, Cl. 318-314.000.
Matsumoto, Shigeru, 4,061,378, Cl. 312-20.000.
Victor United, Inc.: *See—*
Groner, Norman Arlo, 4,061,124, Cl. 124-23.00R.
Villaloboz, Arthur A., to Smith International Inc. Rock bit bearing structure. 4,061,376, Cl. 308-8.200.
Villax, Ivan. Recovery of doxycycline and products thereof. 4,061,676, Cl. 260-559.0AT.
Violette, Theodore T. Drum supporting carriage. 4,061,391, Cl. 296-4.000.
Vivat, Michel: *See—*
Martel, Jacques; Buendia, Jean; and Vivat, Michel, 4,061,729, Cl. 424-305.000.
Vock, Manfred Hugo: *See—*
Evers, William J.; Heinsohn, Howard H., Jr.; and Vock, Manfred Hugo, 4,061,795, Cl. 426-535.000.
Evers, William J.; Heinsohn, Howard H., Jr.; and Vock, Manfred Hugo, 4,061,796, Cl. 426-535.000.
Vodin, George M. Tonneau cover for recreational vehicle. 4,061,394, Cl. 296-100.000.
Vogel, Ralph A., to Essex Group, Inc. Speed control system for continuous strip manufacturing apparatus. 4,061,947, Cl. 318-77.000.
Volk, Herbert Franz: *See—*
Moore, Arthur William; Volk, Herbert Franz; and Merrow, Jack Kenneth, 4,061,600, Cl. 252-510.000.
Volkswagenwerk Aktiengesellschaft: *See—*
Bufler, Ernst, 4,061,362, Cl. 280-689.000.
Wenninger, Josef, 4,061,054, Cl. 74-552.000.
Vollmer, Hartfrid; Dany, Franz-Josef; and Wortmann, Joachim, to Hoechst Aktiengesellschaft. Diphosphates. 4,061,696, Cl. 260-930.000.
von der Eltz, Hans-Ulrich; Feess, Erich; and Glander, Siegfried, to Hoechst Aktiengesellschaft. Device for the application of foam on textile webs. 4,061,001, Cl. 68-200.000.
von Holdt, John W. Apparatus for molding an insert member in a frame member. 4,061,455, Cl. 425-112.000.
Von Janecek, Wolfgang: *See—*
Weiler, Herbert; Schneider, Hans; Von Janecek, Wolfgang; and Weyrich, Ludwin, 4,060,911, Cl. 34-5.000.
Vorley, Geoffrey: *See—*
Dinsdale, Jack; McQue, David Wallace; and Vorley, Geoffrey, 4,061,952, Cl. 318-572.000.
Vostovich, Joseph Edward: *See—*
Rothenberg, Sidney; and Vostovich, Joseph Edward, 4,061,703, Cl. 264-36.000.
Vota, Terry L.: *See—*
Goel, Rajeshwar P.; Vota, Terry L.; and Lynch, Thomas J., 4,061,937, Cl. 310-65.000.
W. A. Whitney Corporation: *See—*
Kindgren, Lee; and Swanson, James P., 4,061,064, Cl. 83-368.000.
W. R. Grace & Co.: *See—*
Guthrie, James Leverette; and Dighe, Shrikant Vishwanath, 4,061,864, Cl. 560-26.000.
Marans, Nelson Samuel; and Gluecksmann, Alfred, 4,061,662, Cl. 560-26.000.
Wada, Kunihiko: *See—*
Togei, Ryoiku; Takei, Akira; and Wada, Kunihiko, 4,062,037, Cl. 357-24.000.
Wade, Jackie F., to Martin Marietta Corporation. High resolution alignment interferometer. 4,061,425, Cl. 356-110.000.
Wagner Electric Corporation: *See—*
Fitzgerald, James J.; Fortunato, Joseph J.; and Demas, Nickolas P., 4,061,940, Cl. 313-318.000.
Wahl, Harro W. D.: *See—*
Burroughs, Viola F.; Vahl, Hasso G.; and Wahl, Harro W. D., 4,061,518, Cl. 156-232.000.
Wahlstrom, Arvid S. Hone for rotary electric razor cutters. 4,060,941, Cl. 51-211.00H.
Wahnish, M. Ervin. Prosthodontic implant and method. 4,060,896, Cl. 32-10.00A.
Walchuk, Thomas S. Apparatus and method for protecting wheel move irrigation systems with electrified fence. 4,061,312, Cl. 256-10.000.
Waldo, Russell W., to Ideal Security Hardware Corporation. Automatically locking crossbolt deadlock. 4,061,383, Cl. 292-335.000.
Walker, Andrew M.; and Gabbard, Ova Gene, to Digital Communications Corporation. Phase locked loop with pre-set and squelch. 4,061,979, Cl. 325-419.000.
Walker, William J.; and Boulay, Henri A., to Leesona Corporation. Easy access-low noise granulator. 4,061,282, Cl. 241-222.000.
Walker, William T., to Hewlett-Packard Co. Constant power rating power supply. 4,061,958, Cl. 363-81.000.
Wallhausser, Hermann: *See—*
Schafer, Werner; Busch, Wolfram; Wallhausser, Hermann; Richter, Manfred; and Wilhelm, Siegfried, 4,061,710, Cl. 264-300.000.
Wandrisco, Joseph M., to United States Steel Corporation. Steel tie insulating saddle. 4,061,270, Cl. 238-107.000.
Ward, Edwin J. Gutter manipulating apparatus and method. 4,061,151, Cl. 134-33.000.
Ward, Walter Henry: *See—*
Metcalfe, Edward Geoffrey; and Ward, Walter Henry, 4,061,359, Cl. 280-638.000.
Ware, Maximilian. Racing paddle and method of making the same. 4,061,106, Cl. 115-24.100.
Warner, Joe Frank. Two cylinder shock absorber system. 4,061,320, Cl. 267-64.00R.
Warner-Lambert Company: *See—*
Satzinger, Gerhard; and Herrmann, Manfred Franz, 4,061,635, Cl. 544-172.000.
Wise, Lawrence D.; and Morrison, Glenn C., 4,061,636, Cl. 260-250.00P.
Warren, Gregory Noel, to Uncle Ben's of Australia Pty. Ltd. Process of simulating a lean and fat meat product. 4,061,789, Cl. 426-250.000.
Warshaw, Saul; Loveland, Winton; Hanemann, Horst J.; and Ramaglia, Michael, to Loveshaw Corporation, The. Carton sealing machine having releasable latching means to hold retracted tape applying means while any carton travels therepast. 4,061,526, Cl. 156-468.000.
Washburn, Owen Victor; Kouvarellis, Georgeos Konstandenos; and Ferguson, William Alexander, to Uniroyal, Ltd. Sorption of weak organic acids from water by polyurethane. 4,061,565, Cl. 210-32.000.
Watanabe, Katsumi, to Yugen Kaisha Watanabe Kenkyusho. Vibration transmission mechanism for a phonograph. 4,061,343, Cl. 274-24.00R.
Watanabe, Satoshi: *See—*
Tezuka, Nobuo; Uchidoi, Masanori; Iura, Yukio; Watanabe, Satoshi; Yamamichi, Masayoshi; and Aizawa, Hiroshi, 4,062,028, Cl. 354-152.000.
Watashiro, Seiichi: *See—*
Sato, Fumio; Sakamoto, Teruo; Watashiro, Seiichi; Inoue, Hayao; and Yahata, Yoshihito, 4,061,164, Cl. 141-90.000.
Watson, James M., to Cosden Technology, Inc. Polymerization inhibitor for vinyl aromatic compounds. 4,061,545, Cl. 203-9.000.
Watts, Claude H., to Precision Metalsmiths, Inc. Pattern assembly and method of making the same. 4,061,175, Cl. 164-45.000.
Wawretschek, Lothar: *See—*
Wawretschek, Wolfgang; and Wawretschek, Lothar, 4,061,741, Cl. 424-232.000.
Wawretschek, Wolfgang; and Wawretschek, Lothar, to Servomed Arzei GmbH & Co. Pharma KG, Firma. Physiological substances for intensifying the pharmacological effect of drugs. 4,061,741, Cl. 424-232.000.
Way, Frederick L. Battery spark suppression circuit. 4,062,051, Cl. 361-6.000.

Weaver Engineering & Mfg. Co.: *See—*
Fish, Frank L., 4,061,015, Cl. 73-49.500.
Weaver, Leslie A.: *See—*
Kingman, Stephen A.; and Weaver, Leslie A., 4,061,353, Cl. 280-106.00T.
Weber, Donald William, to Ampex Corporation. Tape timing apparatus and method employing a phase comparison between sequential pulse trains. 4,062,048, Cl. 360-72.000.
Wehinger, Egbert: *See—*
Horstmann, Harald; Meng, Karl; and Wehinger, Egbert, 4,061,653, Cl. 548-360.000.
Weidenbach, Guenter; Lecloux, Andre; and Gobillon, Yves, to Kali-Chemie Aktiengesellschaft. Purification of exhaust gases. 4,061,713, Cl. 423-213.500.
Weigers, Wilhelmus Johannen: *See—*
Hall, John B.; and Weigers, Wilhelmus Johannen, 4,061,686, Cl. 260-631.00R.
Weigert, Frank Julian, to Du Pont de Nemours, E. I., and Company. Catalytic synthesis of phenols. 4,061,685, Cl. 260-621.00G.
Weil, Rudolf: *See—*
Dorner, Friedrich; Scriba, Marianne; and Weil, Rudolf, 4,061,538, Cl. 195-29.000.
Weiler, Herbert; Schneider, Hans; Von Janecek, Wolfgang; and Weyrich, Ludwin, to Behringwerke Aktiengesellschaft. Process for the preparation of a container closed under sterile conditions and containing lyophilized material. 4,060,911, Cl. 34-5.000.
Weiss, Martin Joseph: *See—*
Floyd, Middleton Brawner, Jr.; Weiss, Martin Joseph; Grudzinskas, Charles Vincent; and Lai Chen, Sow-Mei, 4,061,670, Cl. 260-514.00D.
Floyd, Middleton Brawner, Jr.; McGahren, William James; Schaub, Robert Eugene; and Weiss, Martin Joseph, 4,061,672, Cl. 260-514.00D.
Welsh, Howard: *See—*
Bennett, John A.; McAllister, Ian R.; and Welsh, Howard, 4,061,569, Cl. 210-83.000.
Welter, Clarence L.: *See—*
Clancy, John F.; and Welter, Clarence L., 4,061,896, Cl. 200-323.000.
Wenninger, Josef, to Volkswagenwerk Aktiengesellschaft. Steering wheel. 4,061,054, Cl. 74-552.000.
Werner, Wolfgang: *See—*
Lange, Hans, Rittersdorf, Walter; Rey, Hans-Georg; Werner, Wolfgang; and Rieckmann, Peter, 4,061,468, Cl. 23-253.0TP.
Wessman, Elbert F., to National Can Corporation. Drawing and ironing machine with positive cup feeder. 4,061,012, Cl. 72-347.000.
Westinghouse Electric Corporation: *See—*
Fey, Maurice G.; and Dancy, Edna A., 4,061,492, Cl. 75-10.00R.
Goel, Rajeshwar P.; Vota, Terry L.; and Lynch, Thomas J., 4,061,937, Cl. 310-65.000.
Green, John W., 4,061,963, Cl. 323-43.50R.
McCaskey, Harold O., Jr.; and Palazzolo, Salvatore E., 4,061,823, Cl. 428-318.000.
Westman, Morton Alan: *See—*
Oberstar, Helen Elizabeth; and Westman, Morton Alan, 4,061,602, Cl. 252-547.000.
Weston, Norma Ann: *See—*
Hillard, Ray Leonard; and Weston, Norma Ann, 4,061,681, Cl. 260-606.50P.
Wettstein, Eugen: *See—*
Vaeth, Guenter; Ohlinger, Manfred; Stritzinger, Heinz; Schoenafinger, Eduard; Wettstein, Eugen; and Guth, Wolfgang, 4,061,727, Cl. 423-634.000.
Weyerhaeuser Company: *See—*
Gillern, Maurice F., 4,061,620, Cl. 260-29.300.
Weyrich, Ludwin: *See—*
Weiler, Herbert; Schneider, Hans; Von Janecek, Wolfgang; and Weyrich, Ludwin, 4,060,911, Cl. 34-5.000.
Whicker, Bobbie Dean: *See—*
Raisbeck, Wesley Paul; Bass, Merlyn Duane; Whicker, Bobbie Dean; Davis, William Clair; and Fairbank, Raymond Harry, 4,061,284, Cl. 241-294.000.
Whirlpool Corporation: *See—*
Drews, Reinhold Alvin, 4,061,002, Cl. 68-212.000.
White, William Page; and Hawkins, Kenneth Robert, to Cincinnati Milacron, Inc. Hood adjusting apparatus. 4,060,942, Cl. 51-268.000.
Whitehouse, Sydney Robert: *See—*
Counsell, Patrick James Claude; and Whitehouse, Sydney Robert, 4,061,825, Cl. 428-355.000.
Whitmore, Jack: *See—*
Nash, Harold Garth; and Whitmore, Jack, 4,061,885, Cl. 179-84.0VF.
Whitney, James C., to Dictaphone Corporation. Bi-directional rotary drive mechanism. 4,061,292, Cl. 242-201.000.
Whitney, Richard P., to Sivyer Steel Corporation. Shredder with grate cartridge. 4,061,277, Cl. 241-73.000.
Whittlesey, James W.: *See—*
Rajasekaran, Ramanujam; Taylor, Dennis O.; and Whittlesey, James W., 4,061,187, Cl. 165-107.000.
Wick, Raymond V.: *See—*
Goranson, Rex W.; and Wick, Raymond V., 4,061,917, Cl. 250-338.000.
Widl, Walter Herbert Erwin, to Telefonaktiebolaget L M Ericsson Method and apparatus for generating a number of weakly correlated pseudorandom pulse trains. 4,061,881, Cl. 179-15.0BF.
Widran, Jerrold; and Solin, Stuart A., to Widran, Jerrold. Binocular endoscope. 4,061,135, Cl. 128-6.000.
Wiech, Norbert L.: *See—*
Blohm, Thomas R.; Grisar, J. Martin; and Wiech, Norbert L., 4,061,746, Cl. 424-244.000.
Wiechert, Rudolf; Kerb, Ulrich; and Engelfried, Otto, to Schering Aktiengesellschaft. $\Delta^{9(11)}$-5α-20-keto steroids and process for their production. 4,061,661, Cl. 260-397.450.
Wiggins Teape Limited: *See—*
Allen, Roger Anthony, 4,061,109, Cl. 118-118.000.
Wild, Hans; Jung, Rudolf; Echte, Adolf; Zizlsperger, Johann; and Gausepohl, Hermann, to BASF Aktiengesellschaft. Purifying acrylonitrile for the manufacture of acrylonitrile polymers. 4,061,858, Cl. 526-67.000.
Wiley, Robert Emerson: *See—*
Clary, Jerome Francis; Wiley, Robert Emerson; and Bowns, Richard Earl, 4,061,601, Cl. 252-511.000.
Wilhelm, Siegfried: *See—*
Schafer, Werner; Busch, Wolfram; Wallhausser, Hermann; Richter, Manfred; and Wilhelm, Siegfried, 4,061,710, Cl. 264-300.000.
Wilkes, Glenn R.; and Brault, Albert T., to Eastman Kodak Company. Catalytic activation of cobalt complex imaging by cobalt. 4,061,497, Cl. 96-77.000.
Wilkinson, Alvin H. Safety becket. 4,061,388, Cl. 294-82.00R.
Willard, John Wesley, to CAW Industries, Inc. Method of therapeutically treating warm blooded animals and compositions therefor. 4,061,734, Cl. 424-155.000.
Willem, Michel, to Ceraver S.A. Method of manufacturing suspension insulators for electric power lines and device for the implementation thereof. 4,061,515, Cl. 156-73.600.
Willenbecher, James F.; and Armstrong, Lee R., to United Technologies Corporation. Speed-related indication comparisons in internal combustion engine diagnostics. 4,061,025, Cl. 73-116.000.
Willey, Arthur F.: *See—*
Fiedler, Edgar F.; Copas, Gordon A.; and Willey, Arthur F., 4,060,959, Cl. 53-373.000.
William H. Rorer, Inc.: *See—*
Diamond, Julius; and Douglas, George H., 4,061,771, Cl. 424-304.000.
Williams Patent Crusher and Pulverizer Company: *See—*
Williams, Robert M., 4,061,274, Cl. 241-24.000.
Williams, Robert M., to Williams Patent Crusher and Pulverizer Company. Material reducing apparatus and method of operating the same. 4,061,274, Cl. 241-24.000.
Wilson, Clifford Arthur, to Rotocrop International, Ltd. Compost bin. 4,060,945, Cl. 52-169.500.
Wilson, Melvin A. Solar furnace heating system. 4,061,129, Cl. 126-270.000.
Wincanton Engineering Limited: *See—*
Charles, George Kenneth, 4,061,794, Cl. 426-486.000.
Windle, William, to English Clays Lovering Pochin & Company Limited. Ball clay. 4,061,502, Cl. 106-72.000.
Windmolier & Holscher: *See—*
Mundus, Friedhelm; and Schneider, Horst, 4,061,458, Cl. 425-392.000.
Wingard Limited: *See—*
Cunningham, Douglas James, 4,061,291, Cl. 242-107.000.
Winkler, Bruno; Mangei, Bernd; and Fritz, Dieter, to Naturin-Werk Becker & Co. Dyed edible food casings. 4,061,786, Cl. 426-138.000.
Winstel, Guenter, to Siemens Aktiengesellschaft. Luminescent diode. 4,062,035, Cl. 357-17.000.
Winston, Emanuel A. Irrigation device. 4,061,272, Cl. 239-145.000.
Wintzer, Klaus, to Siemens Aktiengesellschaft. Method and apparatus for transmitting digital information signals from signal transmitters to signal receivers over switching apparatus. 4,061,879, Cl. 179-15.0BA.
Wirth, Hanns: *See—*
Hannig, Kurt; and Wirth, Hanns, 4,061,560, Cl. 204-299.00R.
Wise, Lawrence D.; and Morrison, Glenn C., to Warner-Lambert Company. Naphthalenone phthalazinylhydrazones. 4,061,636, Cl. 260-250.00P.
Wittenberg, Albert J.: *See—*
Geurts, Petrus T. J.; and Wittenberg, Albert J., 4,061,422, Cl. 350-293.000.
Witzel, Bruce E.: *See—*
Dybas, Richard A.; Grier, Nathaniel; and Witzel, Bruce E., 4,061,775, Cl. 424-330.000.
Witzke, Gunther; and Baumgartner, Hans Ulrich, to Kistler Instrumente AG. Diaphragm arrangement for pressure transducers. 4,061,035, Cl. 73-406.000.
Wolf, Erhard: *See—*
Ertel, Hartmut; Heubach, Gunther; and Wolf, Erhard, 4,061,767, Cl. 424-282.000.
Wolverine Aluminum Corporation: *See—*
DeSantis, Raymond P., 4,061,452, Cl. 425-78.000.
DeSantis, Raymond P., 4,061,453, Cl. 425-78.000.
Wommack, Malcolm R. Worm detection process. 4,061,788, Cl. 426-248.000.
Wood, Derek A., to Shell Oil Company. Preparation of phenoxybenzyl esters. 4,061,664, Cl. 260-465.00D.
Wood, Ernest C.: *See—*
Samuels, Peter B.; and Wood, Ernest C., 4,061,134, Cl. 128-1.00R
Wood, Samuel F.: *See—*
Kasson, James M.; and Wood, Samuel F., 4,061,887, Cl. 179-99.000
Wood, William H., to Airheart Products, Inc. Bicycle brake. 4,061,206, Cl. 188-26.000.

Woodstream Corporation: *See*—
Woolworth, Richard G., 4,060,864, Cl. 9-6.00M.
Woolworth, Richard G., 4,060,865, Cl. 9-6.00M.

Woodward, Oakley McDonald; and Siukola, Matti Solmu Olavi, to RCA Corporation. Low cost linear/circularly polarized antenna. 4,062,019, Cl. 343-797.000.

Woolley, Lee A., to Scott & Fetzer Co., The. Synchronous motor. 4,061,936, Cl. 310-41.000.

Woolworth, Richard G., to Woodstream Corporation. Boat construction incorporating flotation means. 4,060,864, Cl. 9-6.00M.

Woolworth, Richard G., to Woodstream Corporation. Boat construction incorporating flotation means. 4,060,865, Cl. 9-6.00M.

Wortmann, Joachim: *See*—
Vollmer, Hartfrid; Dany, Franz-Josef; and Wortmann, Joachim, 4,061,696, Cl. 260-930.000.

Wright, John B.: *See*—
Hall, Charles M.; and Wright, John B., 4,061,791, Cl. 424-304.000.

Wright, Walter J.: *See*—
Sharma, Ram A.; Wright, Walter J.; and Murie, Richard A., 4,061,841, Cl. 429-112.000.

Wulf, Horst-Dieter: *See*—
Kaufhold, Manfred; and Wulf, Horst-Dieter, 4,061,687, Cl. 260-632.0HF.

Wynne, Francis Edmund, Jr.: *See*—
McKinney, Joel Drexler; Sebulsky, Raynor T.; and Wynne, Francis Edmund, Jr., 4,061,562, Cl. 208-61.000.

Wynveen, Richard A.: *See*—
United States of America, National Aeronautics and Space Administration; Wynveen, Richard A.; Powell, James D.; and Schubert, Franz H., 4,061,570, Cl. 210-96.00M.

Xerox Corporation: *See*—
Batchelor, Phillip J.; Traister, Robert L.; Gray, Gary A.; and Marino, Joseph A., 4,062,061, Cl. 364-900.000.
Price, Edgar Elmer; and Spurles, Louise Leone, 4,061,419, Cl. 350-184.000.

Yahata, Yoshihito: *See*—
Sato, Fumio; Sakamoto, Teruo; Watashiro, Seiichi; Inoue, Hayao; and Yahata, Yoshihito, 4,061,164, Cl. 141-90.000.

Yamada, Hirotada; Okamura, Kosaku; Tobiki, Hisao; Tanno, Norihiko; Shimago, Kozo; Nakagome, Takenari; Komatsu, Toshiaki; Izawa, Akio; Noguchi, Hiroshi; Irie, Kenji; and Eda, Yasuko, to Sumitomo Chemical Company, Limited. 7-(α-(4-Hydroxy-1,5-naphthyridine-3-carbonamido)-α-phenylacetamido) cephalosporin derivatives. 4,061,748, Cl. 424-246.000.

Yamada, Seiji: *See*—
Kobori, Toshio; Tsujimoto, Kayoshi; Nanba, Yasuhiro; and Yamada, Seiji, 4,062,023, Cl. 354-38.000.

Yamaguchi, Sizuo, to Citizen Watch Company Limited. Method and apparatus for driving electrochromic display device. 4,060,975, Cl. 58-50.00R.

Yamajo, Mashayuki: *See*—
Yoshida, Akira; Kubo, Taketoshi; Yamajo, Mashayuki; and Ishigaki, Masahiro, 4,061,172, Cl. 152-379.100.

Yamamichi, Masayoshi: *See*—
Tezuka, Nobuo; Uchidoi, Masanori; Iura, Yukio; Watanabe, Satoshi; Yamamichi, Masayoshi; and Aizawa, Hiroshi, 4,062,028, Cl. 354-152.000.
Tsunekawa, Tokuichi; Uchidoi, Masanori; Shimizu, Masami; Yamamichi, Masayoshi; Murayama, Keiya; and Aizawa, Hiroshi, 4,062,024, Cl. 354-60.00R.

Yamamoto, Takashi: *See*—
Yoshida, Moritoshi; Yamamoto, Takashi; and Nii, Sumito, 4,061,780, Cl. 424-358.000.

Yamane, Mamoru: *See*—
Ozaki, Hiromi; Yamane, Mamoru; Kodama, Hachio; and Yoshika, Haruo, 4,061,472, Cl. 44-1.00R.

Yamasaki, Akitosi; Fukuyama, Kiyoshi; and Miyauchi, Kazunori, to Tsubakinoto Chain Company. Air hoist and its control device. 4,061,311, Cl. 254-168.000.

Yamatsu, Isao: *See*—
Kijima, Shizumasa; Yamatsu, Isao; Minami, Norio; and Inai, Yuichi, 4,061,660, Cl. 260-396.00R.

Yanagawa, Nobuyuki, to Ricoh Co., Ltd. Sheet separator for use in electrophotographic copying machines. 4,061,330, Cl. 271-174.000.

Yanick, Paul, Jr.: *See*—
Freifeld, Stephen; and Yanick, Paul, Jr., 4,061,875, Cl. 179-1.00P.

Yanmar Diesel Engine Co., Ltd.: *See*—
Fukushima, Tsugio, 4,060,985, Cl. 60-319.000.

Yasuda, Shigeyuki: *See*—
Nishino, Tetsuya; and Yasuda, Shigeyuki, 4,061,785, Cl. 426-124.000.

Yates, Robert W., to Redken Laboratories, Inc. Hair testing apparatus. 4,061,022, Cl. 73-95.000.

Yazaki, Hitoshi: *See*—
Yoshiike, Kiwamu; and Yazaki, Hitoshi, 4,061,307, Cl. 251-315.000.

Yokoi, Hiroshi; and Akagawa, Masataka, to Kokusai Denshin Denwa Kabushiki Kaisha. Scanning antenna with moveable beam waveguide feed and defocusing adjustment. 4,062,018, Cl. 343-754.000.

Yokokawa, Takao; Kanazawa, Shogo; Otoguro, Yasuo; Suzuki, Nobukazu; Akase, Sigeyuki; Miida, Noboru; Akazawa, Tadahisa; and Kuroiwa, Kazuya, to Nippon Steel Corporation. Free-cutting graphitic steel. 4,061,494, Cl. 75-124.000.

Yonezawa, Toshiaki: *See*—
Shigemori, Youjiro; Mitumori, Yoshio; and Yonezawa, Toshiaki, 4,062,050, Cl. 360-30.000.

Yoshida, Akira; Kubo, Taketoshi; Yamajo, Mashayuki; and Ishigaki, Masahiro, to Toyo Rubber Industry Co., Ltd., The. Assembly of pneumatic tire and rim. 4,061,172, Cl. 152-379.100.

Yoshida, Fumihiko; Mizusawa, Kiyoshi; and Nakamura, Kazuo, to Kikkoman Shoyu Co., Ltd. Cholesterol oxidaze and process for preparing same. 4,061,540, Cl. 195-62.000.

Yoshida, Moritoshi; Yamamoto, Takashi; and Nii, Sumito, to Nichiyu Kagaku Co., Ltd. Cosmetic oil containing isobutylene. 4,061,780, Cl. 424-358.000.

Yoshida, Takashi, to Nippon Gakki Seizo Kabushiki Kaisha. Junction field effect transistor of vertical type. 4,062,036, Cl. 357-22.000.

Yoshida, Tokuzo: *See*—
Yoshida, Toru; Hosoi, Kameo; Yoshida, Tokuzo; Shimizu, Kazuyuki; and Nakagawa, Koithiro, 4,060,913, Cl. 34-80.000.

Yoshida, Toru; Hosoi, Kameo; Yoshida, Tokuzo; Shimizu, Kazuyuki; and Nakagawa, Koithiro, to Takasago Thermal Engineering Co., Ltd; and Nippon Steel Corporation. Assembly for dehydrating air to be supplied to blast furnace. 4,060,913, Cl. 34-80.000.

Yoshiike, Kiwamu; and Yazaki, Hitoshi, to Kitazawa Shoji Kabushiki Kaisha. Ball valve. 4,061,307, Cl. 251-315.000.

Yoshika, Haruo: *See*—
Ozaki, Hiromi; Yamane, Mamoru; Kodama, Hachio; and Yoshika, Haruo, 4,061,472, Cl. 44-1.00R.

Yoshioka, Takao: *See*—
Murayama, Keisuke; Morimura, Syoji; Yoshioka, Takao; and Kurumada, Tomoyuki, 4,061,616, Cl. 260-45.80N.

Young, Jonathan D.; and Caldecott, Ross, to Ohio State University, The. Underground pipe detector. 4,062,010, Cl. 343-5.0NA.

Young, Steven H. Tone arms. 4,061,342, Cl. 274-23.00A.

Youngquist, Rudolph William, to Procter & Gamble Company, The. Shaped textured protein food product. 4,061,784, Cl. 426-93.000.

Yugen Kaisha Watanabe Kenkyusho: *See*—
Watanabe, Katsumi, 4,061,343, Cl. 274-24.00R.

Yukinaga, Hisajiro; Kano, Hideo; and Ogata, Masaru, to Shionogi & Co., Ltd. Post-harvest plant preserving compositions. 4,061,490, Cl. 71-68.000.

Yundt, Albert P., to Bard Laboratories, Inc. Thermographic recording system. 4,061,836, Cl. 428-537.000.

Zaidan Hojin Biseibutsu Kagaku Kenkyu Kai: *See*—
Ohno, Masaji; and Kataoka, Mutsuo, 4,061,769, Cl. 424-283.000.

Zaininger, Henry W.: *See*—
Finigan, George D.; May, Brian E.; and Zaininger, Henry W., 4,060,916, Cl. 35-10.000.

Zall, Robert R.; Sobel, A. Theodore; and Price, Donald R., to Cornell Research Foundation, Inc. Apparatus for cleaning automatic milking machines. 4,061,504, Cl. 134-95.000.

Zeidler, Guenter; and Auracher, Franz, to Siemens Aktiengesellschaft. Apparatus for distributing light signals among a plurality of receivers. 4,062,043, Cl. 358-86.000.

Zelenskaya, Nadezhda Nikolaevna: *See*—
Kaporovich, Vladimir Georgievich; Sereda, Viktor Grigorievich; Udovenko, Vitaly Kirillovich; Zelenskaya, Nadezhda Nikolaevna; Brazhnik, Viktor Yakovlevich; Sviridov, Evgeny Pavlovich; and Fabrichev, Jury Nikolaevich, 4,061,009, Cl. 72-69.000.

Zemchenko, Alexandr Mikhailovich: *See*—
Lifshits, Viktor Senderovich; Petrov, Georgy Nikolaevich; Papkov, Oleg Sergeevich; Khomenko, Vladimir Ivanovich; Gerasimenko, Alexandr Yakovlevich; Taradaiko, Alexandr Korneevich; Zemchenko, Alexandr Mikhailovich; and Gremyakov, Ivan Petrovich, 4,061,078, Cl. 90-24.00C.

Zielinski, Eugene J., to Owens-Illinois, Inc. Method of forming flexible electrical circuit connections. 4,060,889, Cl. 29-628.000.

Zipay, Albert John: *See*—
Guido, Paul Vincent; Criswell, Robert Lenox; and Zipay, Albert John, 4,060,990, Cl. 60-676.000.

Zirwas, Johann Gerhard, to Siemens Aktiengesellschaft. Transistor power amplifier for transmitting systems. 4,061,984, Cl. 330-149.000.

Zizlsperger, Johann: *See*—
Wild, Hans; Jung, Rudolf; Echte, Adolf; Zizlsperger, Johann; and Gausepohl, Hermann, 4,061,858, Cl. 526-67.000.

Zuckerwar, Allan J.: *See*—
United States of America, National Aeronautics and Space Administration; and Zuckerwar, Allan J., 4,061,041, Cl. 73-646.000.

CROSS REFERENCE OF PUBLISHED PATENT APPLICATIONS PUBLISHED UNDER SECOND TRIAL VOLUNTARY PROTEST PROGRAM AND NOW ISSUED AS PATENTS

DOCUMENT NUMBER	PATENT NUMBER	PUB. DATE	ISSUE DATE	DOCUMENT NUMBER	PATENT NUMBER	PUB. DATE	ISSUE DATE
B 48,560	4,002,772	Mar. 30, 1976	Jan. 11, 1977	B 371,912	3,995,738	Mar. 2, 1976	Dec. 7, 1976
B 54,859	4,000,101	Feb. 17, 1976	Dec. 28, 1976	B 372,016	3,989,685	Mar. 9, 1976	Nov. 2, 1976
B 59,512	3,999,216	Mar. 16, 1976	Dec. 21, 1976	B 372,232	4,000,967	Mar. 16, 1976	Jan. 4, 1977
B 66,272	4,014,978	Feb. 24, 1976	Mar. 29, 1977	B 372,722	3,998,925	Mar. 9, 1976	Dec. 21, 1976
B 71,613	4,008,393	Mar. 16, 1976	Feb. 15, 1977	B 373,344	4,053,067	Feb. 3, 1976	Oct. 11, 1977
B 73,017	4,001,879	Mar. 9, 1976	Jan. 4, 1977	B 373,354	3,989,870	Jan. 27, 1976	Nov. 2, 1976
B 78,315	3,982,192	Feb. 10, 1976	Sep. 21, 1976	B 374,553	4,008,394	Mar. 30, 1976	Feb. 15, 1977
B 79,099	3,982,177	Jan. 13, 1976	Sep. 21, 1976	B 374,588	3,985,899	Jan. 27, 1976	Oct. 12, 1976
B 97,259	3,999,614	Mar. 9, 1976	Dec. 28, 1976	B 376,749	4,014,856	Mar. 30, 1976	Mar. 29, 1977
B 105,006	4,007,074	Mar. 23, 1976	Feb. 8, 1977	B 378,513	3,981,750	Jan. 27, 1976	Sep. 21, 1976
B 111,130	4,001,380	Mar. 16, 1976	Jan. 4, 1977	B 378,760	4,001,477	Mar. 9, 1976	Jan. 4, 1977
B 141,968	4,013,442	Mar. 30, 1976	Mar. 22, 1977	B 379,177	3,981,976	Jan. 27, 1976	Sep. 21, 1976
B 150,142	3,981,767	Jan. 27, 1976	Sep. 21, 1976	B 380,137	4,014,802	Mar. 23, 1976	Mar. 29, 1977
B 159,570	4,036,870	Mar. 23, 1976	July 19, 1977	B 381,006	4,009,447	Apr. 6, 1976	Feb. 22, 1977
B 160,045	3,983,446	Jan. 13, 1976	Sep. 28, 1976	B 381,709	3,984,587	Jan. 13, 1976	Oct. 5, 1976
B 160,099	3,987,221	Jan. 13, 1976	Oct. 19, 1976	B 381,985	3,990,775	Feb. 3, 1976	Nov. 9, 1976
B 163,463	3,981,659	Jan. 27, 1976	Sep. 21, 1976	B 382,120	4,013,639	Mar. 23, 1976	Mar. 22, 1977
B 167,470	4,001,101	Mar. 2, 1976	Jan. 4, 1977	B 383,697	4,008,211	Feb. 17, 1976	Feb. 15, 1977
B 181,208	4,001,391	Mar. 9, 1976	Jan. 4, 1977	B 384,225	3,998,523	Mar. 16, 1976	Dec. 21, 1976
B 200,759	3,986,872	Feb. 3, 1976	Oct. 19, 1976	B 384,330	3,985,613	Jan. 27, 1976	Oct. 12, 1976
B 208,916	3,987,106	Jan. 13, 1976	Oct. 19, 1976	B 384,654	3,992,681	Feb. 24, 1976	Nov. 16, 1976
B 214,925	3,997,648	Mar. 9, 1976	Dec. 14, 1976	B 385,024	3,994,911	Feb. 10, 1976	Nov. 30, 1976
B 231,416	4,000,054	Mar. 30, 1976	Dec. 28, 1976	B 385,483	3,993,684	Feb. 17, 1976	Nov. 23, 1976
B 236,266	4,013,624	Mar. 23, 1976	Mar. 22, 1977	B 385,631	3,982,924	Jan. 27, 1976	Sep. 28, 1976
B 236,342	4,001,182	Feb. 10, 1976	Jan. 4, 1977	B 386,257	3,981,915	Feb. 3, 1976	Sep. 21, 1976
B 248,240	3,983,556	Jan. 13, 1976	Sep. 28, 1976	B 386,673	3,993,717	Feb. 3, 1976	Nov. 23, 1976
B 257,143	4,000,111	Mar. 16, 1976	Dec. 28, 1976	B 386,828	3,992,440	Feb. 3, 1976	Nov. 16, 1976
B 270,274	3,982,223	Feb. 17, 1976	Sep. 21, 1976	B 387,337	D 243,157	Mar. 16, 1976	Jan. 25, 1977
B 270,351	3,997,893	Mar. 30, 1976	Dec. 14, 1976	B 388,675	4,012,459	Mar. 30, 1976	Mar. 15, 1977
B 271,743	4,001,195	Mar. 16, 1976	Jan. 4, 1977	B 389,155	4,000,970	Mar. 30, 1976	Jan. 4, 1977
B 276,026	3,992,405	Feb. 3, 1976	Nov. 16, 1976	B 389,304	3,986,829	Jan. 27, 1976	Oct. 19, 1976
B 279,415	4,000,697	Mar. 16, 1976	Jan. 4, 1977	B 390,031	3,985,799	Jan. 13, 1976	Oct. 12, 1976
B 279,969	3,986,073	Jan. 13, 1976	Oct. 12, 1976	B 390,408	3,992,426	Feb. 3, 1976	Nov. 16, 1976
B 281,162	4,009,481	Mar. 23, 1976	Feb. 22, 1977	B 390,979	4,003,850	Mar. 23, 1976	Jan. 18, 1977
B 283,941	3,995,313	Feb. 3, 1976	Nov. 30, 1976	B 391,473	3,988,370	Mar. 2, 1976	Oct. 26, 1976
B 288,757	4,001,072	Mar. 30, 1976	Jan. 4, 1977	B 391,797	3,988,046	Mar. 9, 1976	Oct. 26, 1976
B 301,143	3,991,107	Jan. 27, 1976	Nov. 9, 1976	B 391,828	4,014,933	Apr. 6, 1976	Mar. 29, 1977
B 302,160	3,985,774	Feb. 3, 1976	Oct. 12, 1976	B 391,844	3,999,165	Mar. 16, 1976	Dec. 21, 1976
B 306,668	3,985,713	Feb. 3, 1976	Oct. 12, 1976	B 392,798	3,996,249	Mar. 30, 1976	Dec. 7, 1976
B 307,698	3,993,763	Feb. 3, 1976	Nov. 23, 1976	B 394,248	3,989,764	Jan. 27, 1976	Nov. 2, 1976
B 308,659	3,981,947	Jan. 27, 1976	Sep. 21, 1976	B 394,350	3,982,200	Jan. 13, 1976	Sep. 21, 1976
B 311,450	3,988,976	Mar. 9, 1976	Nov. 2, 1976	B 394,742	4,009,285	Apr. 13, 1976	Feb. 22, 1977
B 311,779	4,013,481	Feb. 10, 1976	Mar. 22, 1977	B 395,554	3,998,156	Mar. 9, 1976	Dec. 21, 1976
B 313,280	4,003,591	Apr. 6, 1976	Jan. 18, 1977	B 395,975	4,001,085	Mar. 2, 1976	Jan. 4, 1977
B 326,211	3,988,272	Mar. 23, 1976	Oct. 26, 1976	B 396,164	3,989,590	Feb. 3, 1976	Nov. 2, 1976
B 328,065	4,014,752	Mar. 30, 1976	Mar. 29, 1977	B 396,377	D 243,148	Apr. 6, 1976	Jan. 25, 1977
B 328,077	4,014,860	Apr. 13, 1976	Mar. 29, 1977	B 397,674	3,998,438	Mar. 16, 1976	Dec. 21, 1976
B 328,116	4,000,774	Mar. 9, 1976	Jan. 4, 1977	B 398,084	3,996,239	Feb. 3, 1976	Dec. 7, 1976
B 330,719	4,001,121	Mar. 16, 1976	Jan. 4, 1977	B 398,220	3,990,834	Feb. 3, 1976	Nov. 9, 1976
B 330,736	3,996,299	Feb. 3, 1976	Dec. 7, 1976	B 398,488	3,987,991	Feb. 24, 1976	Oct. 26, 1976
B 332,442	4,001,231	Mar. 30, 1976	Jan. 4, 1977	B 399,098	3,997,665	Feb. 24, 1976	Dec. 14, 1976
B 333,110	3,989,867	Mar. 16, 1976	Nov. 2, 1976	B 399,632	4,001,046	Mar. 9, 1976	Jan. 4, 1977
B 333,247	4,001,201	Mar. 16, 1976	Jan. 4, 1977	B 399,908	3,983,323	Jan. 13, 1976	Sep. 28, 1976
B 333,838	4,006,263	Mar. 23, 1976	Feb. 1, 1977	B 400,871	3,988,893	Feb. 17, 1976	Nov. 2, 1976
B 335,783	4,013,744	Mar. 30, 1976	Mar. 22, 1977	B 401,042	D 242,197	Mar. 16, 1976	Nov. 9, 1976
B 336,754	3,989,805	Mar. 16, 1976	Nov. 2, 1976	B 401,221	4,014,791	Apr. 6, 1976	Mar. 29, 1977
B 337,023	4,013,188	Mar. 30, 1976	Mar. 22, 1977	B 402,162	3,994,902	Mar. 2, 1976	Nov. 30, 1976
B 337,823	4,002,746	Mar. 23, 1976	Jan. 11, 1977	B 402,328	3,995,545	Apr. 6, 1976	Dec. 7, 1976
B 339,194	3,982,215	Feb. 3, 1976	Sep. 21, 1976	B 402,553	3,983,219	Feb. 17, 1976	Sep. 28, 1976
B 339,446	4,001,067	Feb. 24, 1976	Jan. 4, 1977	B 402,657	4,013,665	Apr. 6, 1976	Mar. 22, 1977
B 340,170	4,000,444	Mar. 30, 1976	Dec. 28, 1976	B 402,929	3,991,251	Feb. 3, 1976	Nov. 9, 1976
B 344,669	4,013,655	Mar. 16, 1976	Mar. 22, 1977	B 403,076	4,014,917	Apr. 20, 1976	Mar. 29, 1977
B 347,661	3,999,218	Mar. 16, 1976	Dec. 21, 1976	B 403,243	3,996,232	Mar. 30, 1976	Dec. 7, 1976
B 348,433	3,984,405	Feb. 3, 1976	Oct. 5, 1976	B 403,326	4,001,212	Mar. 23, 1976	Jan. 4, 1977
B 349,370	3,989,684	Jan. 27, 1976	Nov. 2, 1976	B 403,477	3,995,315	Feb. 3, 1976	Nov. 30, 1976
B 351,455	4,001,309	Feb. 24, 1976	Jan. 4, 1977	B 403,507	3,982,095	Feb. 10, 1976	Sep. 21, 1976
B 354,222	4,012,305	Mar. 23, 1976	Mar. 15, 1977	B 403,766	3,994,834	Feb. 10, 1976	Nov. 30, 1976
B 354,959	3,995,996	Feb. 17, 1976	Dec. 7, 1976	B 403,883	4,001,481	Mar. 23, 1976	Jan. 4, 1977
B 356,187	3,981,222	Jan. 20, 1976	Sep. 21, 1976	B 405,726	3,981,241	Jan. 13, 1976	Sep. 21, 1976
B 356,470	4,014,789	Mar. 23, 1976	Mar. 29, 1977	B 406,546	D 242,966	Mar. 16, 1976	Jan. 11, 1977
B 357,526	4,001,319	Mar. 23, 1976	Jan. 4, 1977	B 407,205	4,000,966	Mar. 16, 1976	Jan. 4, 1977
B 358,260	3,989,661	Mar. 30, 1976	Nov. 2, 1976	B 407,737	3,992,546	Feb. 3, 1976	Nov. 16, 1976
B 358,427	3,989,896	Feb. 3, 1976	Nov. 2, 1976	B 407,812	4,010,006	Mar. 23, 1976	Mar. 1, 1977
B 359,768	4,013,684	Mar. 30, 1976	Mar. 22, 1977	B 408,123	4,014,887	Apr. 13, 1976	Mar. 29, 1977
B 359,901	3,981,729	Jan. 13, 1976	Sep. 21, 1976	B 409,848	3,983,270	Jan. 27, 1976	Sep. 28, 1976
B 361,954	4,014,753	Apr. 6, 1976	Mar. 29, 1977	B 410,074	4,001,303	Feb. 24, 1976	Jan. 4, 1977
B 363,565	4,004,821	Mar. 30, 1976	Jan. 25, 1977	B 410,694	3,995,530	Mar. 23, 1976	Dec. 7, 1976
B 364,797	3,996,131	Feb. 17, 1976	Dec. 7, 1976	B 411,471	3,982,933	Feb. 17, 1976	Sep. 28, 1976
B 367,092	4,014,920	Apr. 13, 1976	Mar. 29, 1977	B 411,624	4,001,205	Mar. 16, 1976	Jan. 4, 1977
B 367,305	3,998,640	Mar. 2, 1976	Dec. 21, 1976	B 411,765	3,993,428	Feb. 24, 1976	Nov. 23, 1976
B 367,621	3,989,589	Feb. 3, 1976	Nov. 2, 1976	B 412,068	3,981,244	Jan. 13, 1976	Sep. 21, 1976
B 369,221	3,985,834	Feb. 24, 1976	Oct. 12, 1976	B 412,124	4,007,000	Mar. 23, 1976	Feb. 8, 1977
B 369,373	4,013,683	Mar. 23, 1976	Mar. 22, 1977	B 413,379	4,001,325	Mar. 9, 1976	Jan. 4, 1977
B 369,379	4,013,754	Mar. 30, 1976	Mar. 22, 1977	B 414,028	3,993,738	Feb. 17, 1976	Nov. 23, 1976
B 370,309	3,989,640	Jan. 20, 1976	Nov. 2, 1976	B 414,266	3,993,614	Feb. 10, 1976	Nov. 23, 1976
B 371,095	4,005,074	Mar. 23, 1976	Jan. 25, 1977	B 414,481	3,982,979	Jan. 20, 1976	Sep. 28, 1976
B 371,635	4,010,290	Mar. 23, 1976	Mar. 1, 1977	B 414,971	D 242,208	Feb. 10, 1976	Nov. 9, 1976

CROSS REFERENCE OF PUBLISHED PATENT APPLICATIONS PUBLISHED UNDER SECOND TRIAL VOLUNTARY PROTEST PROGRAM AND NOW ISSUED AS PATENTS—CONTINUED

DOCUMENT NUMBER	PATENT NUMBER	PUB. DATE	ISSUE DATE
B 415,021	3,994,173	Mar. 2, 1976	Nov. 30, 1976
B 415,122	3,997,503	Feb. 10, 1976	Dec. 14, 1976
B 415,590	4,009,317	Mar. 23, 1976	Feb. 22, 1977
B 416,257	4,001,335	Mar. 16, 1976	Jan. 4, 1977
B 416,589	3,990,363	Jan. 27, 1976	Nov. 9, 1976
B 417,014	3,981,851	Jan. 13, 1976	Sep. 21, 1976
B 417,164	4,001,360	Mar 2, 1976	Jan. 4, 1977
B 417,349	3,985,076	Mar. 9, 1976	Oct. 12, 1976
B 417,498	4,013,471	Mar. 23, 1976	Mar 22, 1977
B 418,489	3,989,592	Jan. 13, 1976	Nov. 2, 1976
B 419,173	3,999,728	Mar. 9, 1976	Dec. 28, 1976
B 419,582	3,989,681	Mar. 2, 1976	Nov. 2, 1976
B 420,176	4,001,017	Mar. 16, 1976	Jan. 4, 1977
B 420,321	3,990,645	Mar. 30, 1976	Nov. 9, 1976
B 420,472	3,993,934	Feb. 24, 1976	Nov. 23, 1976
B 421,373	4,001,326	Mar. 23, 1976	Jan. 4, 1977
B 421,608	4,013,806	Mar. 23, 1976	Mar. 22, 1977
B 421,975	3,994,693	Mar. 2, 1976	Nov. 30, 1976
B 422,063	3,994,835	Feb. 3, 1976	Nov. 30, 1976
B 422,156	4,010,401	Mar. 23, 1976	Mar. 1, 1977
B 423,365	3,996,186	Feb. 17, 1976	Dec. 7, 1976
B 423,404	3,990,958	Mar 2, 1976	Nov. 9, 1976
B 423,441	3,997,137	Feb. 17, 1976	Dec. 14, 1976
B 423,867	3,990,844	Feb. 3, 1976	Nov 9, 1976
B 423,883	3,986,871	Jan. 27, 1976	Oct. 19, 1976
B 424,354	D 242,416	Feb. 10, 1976	Nov. 23, 1976
B 424,410	4,021,196	Mar. 30, 1976	May 3, 1977
B 424,989	3,990,569	Feb. 3, 1976	Nov. 9, 1976
B 425,193	4,002,107	Mar. 23, 1976	Jan. 11, 1977
B 425,285	4,014,676	Apr. 13, 1976	Mar. 29, 1977
B 425,462	3,998,396	Mar. 9, 1976	Dec. 21, 1976
B 425,588	3,985,111	Jan. 13, 1976	Oct. 12, 1976
B 426,157	4,013,714	Mar. 23, 1976	Mar. 22, 1977
B 426,227	3,999,028	Mar. 2, 1976	Dec. 21, 1976
B 426,266	3,998,839	Mar. 2, 1976	Dec. 21, 1976
B 426,274	4,014,949	Jan. 20, 1976	Mar. 29, 1977
B 426,424	3,993,742	Feb. 3, 1976	Nov. 23, 1976
B 426,639	3,992,539	Feb. 3, 1976	Nov. 16, 1976
B 426,819	3,995,868	Feb. 17, 1976	Dec. 7, 1976
B 427,883	3,982,277	Jan. 20, 1976	Sep 21, 1976
B 427,946	4,006,161	Mar. 23, 1976	Feb. 1, 1977
B 428,103	4,000,211	Feb. 10, 1976	Dec. 28, 1976
B 428,271	3,987,415	Mar. 23, 1976	Oct. 19, 1976
B 428,408	3,995,252	Mar. 2, 1976	Nov. 30, 1976
B 428,877	3,984,649	Jan. 27, 1976	Oct. 5, 1976
B 429,018	3,990,061	Feb 10, 1976	Nov. 2, 1976
B 429,027	4,001,260	Mar. 23, 1976	Jan. 4, 1977
B 429,157	3,990,628	Jan. 27, 1976	Nov. 9, 1976
B 429,434	3,989,223	Feb. 17, 1976	Nov. 2, 1976
B 430,157	3,992,465	Feb. 17, 1976	Nov. 16, 1976
B 430,172	3,982,563	Jan. 13, 1976	Sep. 28, 1976
B 430,213	4,013,514	Mar. 30, 1976	Mar. 22, 1977
B 430,276	3,982,171	Jan. 20, 1976	Sep. 21, 1976
B 430,287	D 242,489	Feb. 10, 1976	Nov. 23, 1976
B 430,326	4,003,581	Mar. 23, 1976	Jan. 18, 1977
B 430,334	3,981,677	Jan. 27, 1976	Sep 21, 1976
B 431,072	3,985,610	Jan. 20, 1976	Oct. 12, 1976
B 431,334	3,988,095	Mar. 16, 1976	Oct. 26, 1976
B 431,713	4,000,167	Feb. 10, 1976	Dec. 28, 1976
B 431,785	3,999,950	Feb. 24, 1976	Dec. 28, 1976
B 431,797	4,007,290	Mar. 30, 1976	Feb. 8, 1977
B 432,049	3,995,123	Mar. 23, 1976	Nov. 30, 1976
B 432,140	3,999,163	Mar. 23, 1976	Dec. 21, 1976
B 432,265	4,013,480	Mar. 23, 1976	Mar. 22, 1977
B 432,594	4,003,404	Mar. 30, 1976	Jan. 18, 1977
B 432,969	3,997,017	Mar. 2, 1976	Dec. 14, 1976
B 432,991	3,991,669	Mar. 2, 1976	Nov. 16, 1976
B 433,094	3,987,768	Jan. 27, 1976	Oct. 26, 1976
B 433,707	4,013,594	Mar. 23, 1976	Mar. 22, 1977
B 433,892	4,016,061	Apr. 6, 1976	Apr. 5, 1977
B 433,930	4,012,324	Mar 23, 1976	Mar. 15, 1977
B 434,206	3,994,610	Feb. 3, 1976	Nov. 30, 1976
B 434,441	D 242,849	Mar. 16, 1976	Dec. 28, 1976
B 435,481	4,000,892	Mar. 9, 1976	Jan. 4, 1977
B 435,570	4,000,908	Mar. 16, 1976	Jan. 4, 1977
B 435,617	4,001,234	Mar. 16, 1976	Jan. 4, 1977
B 436,724	3,991,856	Feb. 24, 1976	Nov. 16, 1976
B 437,209	4,001,193	Feb. 3, 1976	Jan. 4, 1977
B 437,559	3,993,287	Feb. 3, 1976	Nov. 23, 1976
B 437,596	3,985,638	Jan. 27, 1976	Oct. 12, 1976
B 437,894	4,001,015	Mar. 2, 1976	Jan. 4, 1977
B 437,986	4,011,399	Apr. 20, 1976	Mar. 8, 1977
B 438,048	4,001,394	Mar. 23, 1976	Jan. 4, 1977
B 438,484	3,992,451	Feb. 17, 1976	Nov. 16, 1976
B 438,882	3,983,719	Feb. 24, 1976	Oct. 5, 1976
B 438,916	3,983,050	Jan. 13, 1976	Sep. 28, 1976
B 439,542	3,982,199	Jan. 27, 1976	Sep. 21, 1976

DOCUMENT NUMBER	PATENT NUMBER	PUB. DATE	ISSUE DATE
B 439,778	4,001,455	Feb. 3, 1976	Jan. 4, 1977
B 440,548	4,001,271	Mar. 16, 1976	Jan. 4, 1977
B 440,632	4,014,955	Apr. 13, 1976	Mar. 29, 1977
B 440,633	4,000,116	Feb. 10, 1976	Dec. 28, 1976
B 440,858	3,993,670	Feb. 3, 1976	Nov. 23, 1976
B 441,543	4,014,755	Mar. 23, 1976	Mar. 29, 1977
B 441,605	4,026,862	Feb. 3, 1976	May 31, 1977
B 441,723	3,988,249	Mar. 16, 1976	Oct. 26, 1976
B 441,789	4,001,449	Mar. 30, 1976	Jan. 4, 1977
B 442,163	D 242,192	Mar. 16, 1976	Nov. 9, 1976
B 442,295	4,000,477	Mar. 16, 1976	Dec. 28, 1976
B 442,431	4,011,260	Mar. 23, 1976	Mar. 8, 1977
B 442,810	3,997,533	Feb. 24, 1976	Dec. 14, 1976
B 442,866	3,982,351	Feb. 24, 1976	Sep. 28, 1976
B 442,953	4,002,657	Mar. 23, 1976	Jan. 11, 1977
B 442,970	3,989,890	Feb. 3, 1976	Nov. 2, 1976
B 443,163	3,981,242	Feb. 3, 1976	Sep. 21, 1976
B 443,446	D 242,494	Apr. 6, 1976	Nov. 23, 1976
B 443,563	3,996,204	Feb. 24, 1976	Dec. 7, 1976
B 443,647	3,990,737	Feb. 17, 1976	Nov. 9, 1976
B 443,712	3,982,233	Jan. 27, 1976	Sep. 21, 1976
B 444,078	4,014,854	Mar. 23, 1976	Mar. 29, 1977
B 444,294	4,013,634	Mar. 30, 1976	Mar. 22, 1977
B 444,437	3,995,171	Mar. 9, 1976	Nov. 30, 1976
B 445,166	4,001,252	Mar. 2, 1976	Jan. 4, 1977
B 445,459	3,988,889	Feb. 3, 1976	Nov. 2, 1976
B 445,493	3,994,903	Mar. 2, 1976	Nov. 30, 1976
B 445,690	3,999,584	Feb. 3, 1976	Dec. 28, 1976
B 446,107	4,001,276	Mar. 9, 1976	Jan. 4, 1977
B 446,956	4,014,765	Apr. 13, 1976	Mar. 29, 1977
B 447,000	3,984,419	Feb. 3, 1976	Oct. 5, 1976
B 447,440	3,991,724	Feb. 17, 1976	Nov. 16, 1976
B 449,892	3,997,919	Mar. 23, 1976	Dec. 14, 1976
B 449,988	4,014,794	Mar. 30, 1976	Mar. 29, 1977
B 449,989	4,061,572	Mar. 30, 1976	Dec. 6, 1977
B 450,196	3,997,701	Feb. 10, 1976	Dec. 14, 1976
B 450,413	4,007,463	Mar. 23, 1976	Feb. 8, 1977
B 450,521	3,982,838	Feb. 17, 1976	Sep. 28, 1976
B 450,701	3,991,084	Mar. 16, 1976	Nov. 9, 1976
B 450,708	3,989,724	Mar. 9, 1976	Nov. 2, 1976
B 450,870	3,998,951	Mar. 16, 1976	Dec. 21, 1976
B 450,967	3,983,055	Jan. 13, 1976	Sep. 28, 1976
B 451,248	3,997,758	Mar. 2, 1976	Dec. 14, 1976
B 451,308	3,991,037	Feb. 17, 1976	Nov. 9, 1976
B 451,396	4,000,450	Apr. 13, 1976	Dec. 28, 1976
B 451,438	Re. 29,066	Mar. 2, 1976	Dec. 7, 1976
B 451,534	3,986,033	Jan. 13, 1976	Oct. 12, 1976
B 452,034	4,002,367	Mar. 23, 1976	Jan. 11, 1977
B 452,138	4,004,278	Mar. 23, 1976	Jan. 18, 1977
B 452,293	4,014,726	Mar. 30, 1976	Mar. 29, 1977
B 452,501	4,001,111	Mar. 16, 1976	Jan. 4, 1977
B 452,672	3,981,602	Jan. 13, 1976	Sep. 21, 1976
B 452,879	4,001,089	Mar. 16, 1976	Jan. 4, 1977
B 452,883	3,981,735	Jan. 27, 1976	Sep. 21, 1976
B 452,915	4,013,933	Mar. 30, 1976	Mar. 22, 1977
B 452,938	3,994,719	Feb. 17, 1976	Nov. 30, 1976
B 452,944	4,009,773	Mar. 30, 1976	Mar. 1, 1977
B 453,031	3,998,678	Mar. 16, 1976	Dec. 21, 1976
B 453,067	4,005,394	Mar. 23, 1976	Jan. 25, 1977
B 453,238	3,997,063	Mar. 2, 1976	Dec. 14, 1976
B 453,432	4,000,514	Mar. 16, 1976	Dec. 28, 1976
B 453,533	3,997,744	Feb. 17, 1976	Dec. 14, 1976
B 453,616	3,987,376	Jan. 27, 1976	Oct. 19, 1976
B 453,759	3,989,790	Jan. 27, 1976	Nov. 2, 1976
B 453,960	4,014,701	Apr. 13, 1976	Mar. 29, 1977
B 454,283	3,995,153	Feb. 3, 1976	Nov. 30, 1976
B 454,833	4,008,733	Mar. 30, 1976	Feb. 22, 1977
B 455,425	3,990,060	Feb. 3, 1976	Nov. 2, 1976
B 455,481	3,991,092	Feb. 24, 1976	Nov. 9, 1976
B 455,486	4,001,353	Mar. 16, 1976	Jan. 4, 1977
B 455,686	4,001,156	Mar. 2, 1976	Jan. 4, 1977
B 455,759	3,984,242	Feb. 24, 1976	Oct. 5, 1976
B 455,806	3,998,919	Mar. 23, 1976	Dec. 21, 1976
B 456,069	3,998,991	Mar. 9, 1976	Dec. 21, 1976
B 456,148	3,984,269	Jan. 13, 1976	Oct. 5, 1976
B 456,153	3,997,992	Mar. 9, 1976	Dec. 21, 1976
B 456,384	4,014,859	Apr. 6, 1976	Mar. 29, 1977
B 456,579	3,993,715	Feb. 10, 1976	Nov. 23, 1976
B 456,869	4,001,277	Mar. 9, 1976	Jan. 4, 1977
B 456,900	3,996,262	Feb. 3, 1976	Dec. 7, 1976
B 456,905	4,013,431	Mar. 23, 1976	Mar. 22, 1977
B 457,547	3,996,397	Feb. 17, 1976	Dec. 7, 1976
B 457,850	3,993,586	Feb. 10, 1976	Nov. 23, 1976
B 457,862	3,987,195	Jan. 27, 1976	Oct. 19, 1976
B 457,886	3,988,498	Jan. 13, 1976	Oct. 26, 1976
B 457,931	4,001,229	Mar. 16, 1976	Jan. 4, 1977
B 458,500	3,997,805	Feb. 24, 1976	Dec. 14, 1976

CROSS REFERENCE OF PUBLISHED PATENT APPLICATIONS PUBLISHED UNDER SECOND TRIAL VOLUNTARY PROTEST PROGRAM AND NOW ISSUED AS PATENTS—CONTINUED

DOCUMENT NUMBER	PATENT NUMBER	PUB. DATE	ISSUE DATE
B 458,617	3,984,422	Feb. 3, 1976	Oct. 5, 1976
B 458,964	3,996,615	Mar. 2, 1976	Dec. 7, 1976
B 459,190	4,010,786	Mar. 30, 1976	Mar. 8, 1977
B 459,381	4,000,017	Mar. 9, 1976	Dec. 28, 1976
B 459,408	4,018,890	Mar. 23, 1976	Apr. 19, 1977
B 459,597	3,996,711	Feb. 17, 1976	Dec. 14, 1976
B 459,811	3,982,173	Jan. 20, 1976	Sep. 21, 1976
B 459,821	4,005,954	Mar. 30, 1976	Feb. 1, 1977
B 460,388	3,989,448	Jan. 27, 1976	Nov. 2, 1976
B 460,441	3,981,828	Jan. 13, 1976	Sep. 21, 1976
B 460,846	3,985,817	Feb. 24, 1976	Oct. 12, 1976
B 461,184	3,992,482	Feb. 17, 1976	Nov. 16, 1976
B 461,250	4,000,768	Mar. 16, 1976	Jan. 4, 1977
B 461,336	3,982,231	Feb. 3, 1976	Sep. 21, 1976
B 461,352	3,981,681	Jan. 13, 1976	Sep. 21, 1976
B 461,685	4,013,661	Mar. 30, 1976	Mar. 22, 1977
B 461,752	4,016,541	Apr. 20, 1976	Apr. 5, 1977
B 461,874	3,982,276	Jan. 27, 1976	Sep. 21, 1976
B 462,030	4,009,342	Mar. 23, 1976	Feb. 22, 1977
B 462,386	3,988,188	Jan. 13, 1976	Oct. 26, 1976
B 462,424	3,989,602	Feb. 24, 1976	Nov. 2, 1976
B 462,828	3,998,395	Mar. 9, 1976	Dec. 21, 1976
B 462,893	3,984,253	Feb. 24, 1976	Oct. 5, 1976
B 463,322	3,989,982	Jan. 20, 1976	Nov. 2, 1976
B 463,388	3,992,605	Feb. 10, 1976	Nov. 16, 1976
B 463,473	4,002,068	Mar. 23, 1976	Jan. 11, 1977
B 463,591	4,015,051	Mar. 30, 1976	Mar. 29, 1977
B 463,671	3,985,385	Jan. 13, 1976	Oct. 12, 1976
B 464,027	3,999,390	Mar. 16, 1976	Dec. 28, 1976
B 464,290	3,990,307	Feb. 3, 1976	Nov. 9, 1976
B 464,491	4,015,612	Mar. 30, 1976	Apr. 5, 1977
B 464,587	3,991,091	Feb. 3, 1976	Nov. 9, 1976
B 464,593	3,997,659	Mar. 9, 1976	Dec. 14, 1976
B 465,145	3,981,148	Jan. 27, 1976	Sep. 21, 1976
B 465,202	3,989,757	Feb. 24, 1976	Nov. 2, 1976
B 465,393	3,987,390	Jan. 27, 1976	Oct. 19, 1976
B 465,688	3,989,770	Jan. 27, 1976	Nov. 2, 1976
B 465,955	3,997,502	Feb. 3, 1976	Dec. 14, 1976
B 466,304	4,007,095	Mar. 23, 1976	Feb. 8, 1977
B 466,318	3,999,115	Mar. 9, 1976	Dec. 21, 1976
B 466,390	3,983,349	Feb. 24, 1976	Sep. 28, 1976
B 466,419	4,011,087	Mar. 23, 1976	Mar. 8, 1977
B 466,444	3,986,039	Jan. 20, 1976	Oct. 12, 1976
B 466,906	3,993,037	Mar. 16, 1976	Nov. 23, 1976
B 466,929	3,991,195	Jan. 27, 1976	Nov. 9, 1976
B 467,250	3,997,428	Feb. 3, 1976	Dec. 14, 1976
B 467,328	3,997,599	Mar. 9, 1976	Dec. 14, 1976
B 467,412	3,981,265	Jan. 13, 1976	Sep. 21, 1976
B 467,486	3,991,725	Mar. 16, 1976	Nov. 16, 1976
B 467,971	3,983,453	Jan. 13, 1976	Sep. 28, 1976
B 468,052	3,988,335	Feb. 10, 1976	Oct. 26, 1976
B 468,100	3,995,107	Mar. 9, 1976	Nov. 30, 1976
B 468,330	4,001,475	Mar. 16, 1976	Jan. 4, 1977
B 468,350	3,981,922	Jan. 13, 1976	Sep. 21, 1976
B 468,421	4,014,739	Mar. 30, 1976	Mar. 29, 1977
B 468,603	4,003,839	Mar. 23, 1976	Jan. 18, 1977
B 469,036	4,005,926	Mar. 16, 1976	Feb. 1, 1977
B 469,228	4,052,954	Feb. 17, 1976	Oct. 11, 1977
B 469,468	4,000,220	Mar. 16, 1976	Dec. 28, 1976
B 469,947	3,984,153	Jan. 20, 1976	Oct. 5, 1976
B 470,170	3,986,410	Jan. 13, 1976	Oct. 19, 1976
B 470,305	4,014,043	Apr. 6, 1976	Mar. 22, 1977
B 470,348	3,981,929	Jan. 13, 1976	Sep. 21, 1976
B 470,576	3,997,507	Feb. 24, 1976	Dec. 14, 1976
B 470,601	3,985,655	Mar. 9, 1976	Oct. 12, 1976
B 470,798	3,987,480	Jan. 20, 1976	Oct. 19, 1976
B 470,853	4,002,101	Mar. 23, 1976	Jan. 11, 1977
B 470,899	3,996,441	Mar. 2, 1976	Dec. 7, 1976
B 470,900	4,001,213	Mar. 2, 1976	Jan. 4, 1977
B 470,945	4,014,848	Apr. 13, 1976	Mar. 29, 1977
B 471,116	4,001,318	Feb. 17, 1976	Jan. 4, 1977
B 471,221	3,981,974	Jan. 13, 1976	Sep. 21, 1976
B 471,405	3,993,576	Feb. 10, 1976	Nov. 23, 1976
B 471,494	3,993,660	Mar. 16, 1976	Nov. 23, 1976
B 471,579	3,985,689	Jan. 13, 1976	Oct. 12, 1976
B 471,617	3,994,871	Feb. 10, 1976	Nov. 30, 1976
B 471,681	4,012,844	Apr. 13, 1976	Mar. 22, 1977
B 471,735	3,989,408	Feb. 3, 1976	Nov. 2, 1976
B 471,836	4,000,150	Feb. 24, 1976	Dec. 28, 1976
B 472,241	3,992,453	Feb. 17, 1976	Nov. 16, 1976
B 472,256	3,985,789	Jan. 13, 1976	Oct. 12, 1976
B 472,284	3,982,078	Jan. 13, 1976	Sep. 21, 1976
B 472,591	4,013,029	Apr. 6, 1976	Mar. 22, 1977
B 472,760	4,001,330	Apr. 13, 1976	Jan 4, 1977
B 473,039	3,985,747	Feb 10, 1976	Oct 12, 1976
B 473,040	3,985,738	Feb 10, 1976	Oct 12, 1976
B 473,813	3,989,071	Mar 9, 1976	Nov. 2, 1976

DOCUMENT NUMBER	PATENT NUMBER	PUB. DATE	ISSUE DATE
B 473,972	3,984,043	Jan. 13, 1976	Oct. 5, 1976
B 474,573	3,988,375	Jan. 20, 1976	Oct. 26, 1976
B 474,747	3,997,704	Feb. 24, 1976	Dec. 14, 1976
B 475,236	3,989,990	Feb. 3, 1976	Nov. 2, 1976
B 475,385	4,001,071	Mar. 9, 1976	Jan. 4, 1977
B 475,681	3,983,332	Jan. 20, 1976	Sep. 28, 1976
B 475,801	4,056,759	Mar. 30, 1976	Nov. 1, 1977
B 476,267	4,005,068	Apr. 6, 1976	Jan. 25, 1977
B 476,372	3,985,771	Feb. 24, 1976	Oct. 12, 1976
B 476,542	4,013,549	Mar. 30, 1976	Mar. 22, 1977
B 476,568	3,999,456	Mar. 16, 1976	Dec. 28, 1976
B 476,577	3,982,070	Jan. 20, 1976	Sep. 21, 1976
B 476,681	3,986,181	Jan. 13, 1976	Oct. 12, 1976
B 476,776	3,998,715	Mar. 23, 1976	Dec. 21, 1976
B 476,967	3,995,206	Mar. 9, 1976	Nov. 30, 1976
B 477,252	3,985,759	Jan. 13, 1976	Oct. 12, 1976
B 477,481	3,991,076	Feb. 3, 1976	Nov. 9, 1976
B 477,584	D 242,855	Apr. 6, 1976	Dec. 28, 1976
B 477,597	3,993,912	Feb. 17, 1976	Nov. 23, 1976
B 477,892	4,010,355	Mar. 30, 1976	Mar. 1, 1977
B 478,234	4,010,421	Mar. 30, 1976	Mar. 1, 1977
B 478,739	3,992,253	Feb. 17, 1976	Nov. 16, 1976
B 478,759	4,055,681	Mar. 16, 1976	Oct. 25, 1977
B 479,175	3,985,700	Feb. 17, 1976	Oct. 12, 1976
B 479,242	3,983,074	Feb. 17, 1976	Sep. 28, 1976
B 479,502	3,999,030	Mar. 16, 1976	Dec. 21, 1976
B 479,681	D 242,672	Mar. 16, 1976	Dec. 14, 1976
B 479,969	4,001,132	Mar. 9, 1976	Jan. 4, 1977
B 480,114	4,001,327	Mar. 2, 1976	Jan. 4, 1977
B 480,251	4,008,700	Mar. 23, 1976	Feb. 22, 1977
B 480,287	4,006,029	Mar. 30, 1976	Feb. 1, 1977
B 480,292	3,994,011	Mar. 16, 1976	Nov. 23, 1976
B 480,350	3,994,164	Feb. 10, 1976	Nov. 30, 1976
B 480,384	3,999,737	Mar. 23, 1976	Dec. 28, 1976
B 480,452	3,994,923	Feb. 10, 1976	Nov. 30, 1976
B 480,473	3,995,608	Mar. 2, 1976	Dec. 7, 1976
B 480,604	3,985,251	Jan. 13, 1976	Oct. 12, 1976
B 480,625	3,996,227	Feb. 24, 1976	Dec. 7, 1976
B 480,662	3,988,382	Mar. 2, 1976	Oct. 26, 1976
B 480,740	3,996,431	Mar. 2, 1976	Dec. 7, 1976
B 480,749	3,999,207	Mar. 9, 1976	Dec. 21, 1976
B 480,987	4,001,459	Mar. 30, 1976	Jan. 4, 1977
B 481,048	3,998,542	Mar. 16, 1976	Dec. 21, 1976
B 481,190	4,013,468	Mar. 30, 1976	Mar. 22, 1977
B 481,600	3,981,235	Jan. 27, 1976	Sep. 21, 1976
B 481,737	3,982,057	Jan. 13, 1976	Sep. 21, 1976
B 481,778	4,001,385	Mar. 30, 1976	Jan. 4, 1977
B 481,930	3,992,717	Feb. 24, 1976	Nov. 16, 1976
B 481,989	4,008,337	Mar. 23, 1976	Feb. 15, 1977
B 482,058	4,001,398	Mar. 2, 1976	Jan. 4, 1977
B 482,660	3,995,026	Feb. 10, 1976	Nov. 30, 1976
B 482,709	3,985,733	Feb. 24, 1976	Oct. 12, 1976
B 482,907	3,984,811	Jan. 20, 1976	Oct. 5, 1976
B 483,247	4,001,889	Apr. 13, 1976	Jan. 4, 1977
B 483,256	3,981,723	Feb. 10, 1976	Sep. 21, 1976
B 483,268	3,995,215	Mar. 9, 1976	Nov. 30, 1976
B 483,606	3,986,990	Jan. 27, 1976	Oct. 19, 1976
B 483,615	3,988,637	Jan. 27, 1976	Oct. 26, 1976
B 483,746	4,014,923	Mar. 23, 1976	Mar. 29, 1977
B 483,762	3,993,608	Feb. 10, 1976	Nov. 23, 1976
B 483,865	3,985,693	Jan. 13, 1976	Oct. 12, 1976
B 484,029	3,983,558	Feb. 10, 1976	Sep. 28, 1976
B 484,067	3,992,374	Feb. 17, 1976	Nov. 16, 1976
B 484,068	3,994,937	Mar. 2, 1976	Nov. 30, 1976
B 484,121	3,997,770	Mar. 16, 1976	Dec. 14, 1976
B 484,269	4,000,159	Feb. 10, 1976	Dec. 28, 1976
B 484,332	3,986,540	Mar. 2, 1976	Oct. 19, 1976
B 484,365	3,983,578	Jan. 27, 1976	Sep. 28, 1976
B 484,419	4,001,292	Mar. 9, 1976	Jan. 4, 1977
B 484,437	4,013,740	Mar. 30, 1976	Mar. 22, 1977
B 484,482	3,994,017	Mar. 23, 1976	Nov. 23, 1976
B 484,769	3,999,498	Mar. 16, 1976	Dec. 28, 1976
B 485,051	3,992,418	Feb. 17, 1976	Nov. 16, 1976
B 485,060	3,983,067	Feb. 17, 1976	Sep. 28, 1976
B 485,169	3,989,791	Mar. 16, 1976	Nov. 2, 1976
B 485,188	4,001,170	Mar. 16, 1976	Jan. 4, 1977
B 485,401	3,985,859	Jan. 27, 1976	Oct. 12, 1976
B 485,575	3,996,565	Feb. 24, 1976	Dec. 7, 1976
B 485,926	4,006,357	Mar. 23, 1976	Feb. 1, 1977
B 485,972	4,017,472	Mar. 23, 1976	Apr. 12, 1977
B 486,280	3,983,130	Feb 3, 1976	Sep. 28, 1976
B 486,614	3,995,835	Feb. 17, 1976	Dec. 7, 1976
B 486,678	4,001,273	Mar. 2, 1976	Jan. 4, 1977
B 486,828	3,989,651	Mar. 2, 1976	Nov. 2, 1976
B 487,062	D 241,256	Feb. 10, 1976	Nov. 9, 1976
B 487,078	4,012,895	Mar. 30, 1976	Mar. 22, 1977
B 487,133	3,989,826	Jan. 27, 1976	Nov. 2, 1976

CROSS REFERENCE OF PUBLISHED PATENT APPLICATIONS PUBLISHED UNDER SECOND TRIAL VOLUNTARY PROTEST PROGRAM AND NOW ISSUED AS PATENTS—CONTINUED

DOCUMENT NUMBER	PATENT NUMBER	PUB. DATE	ISSUE DATE	DOCUMENT NUMBER	PATENT NUMBER	PUB. DATE	ISSUE DATE
B 487,260	3,990,610	Jan. 27, 1976	Nov. 9, 1976	B 497,194	3,988,267	Feb. 3, 1976	Oct. 26, 1976
B 487,411	3,983,579	Feb. 24, 1976	Sep. 28, 1976	B 497,292	3,994,052	Feb. 3, 1976	Nov. 30, 1976
B 487,423	3,998,810	Mar. 2, 1976	Dec. 21, 1976	B 497,293	4,011,412	Mar. 30, 1976	Mar. 8, 1977
B 487,427	3,995,788	Mar. 2, 1976	Dec. 7, 1976	B 497,473	3,990,839	Feb. 3, 1976	Nov. 9, 1976
B 487,467	4,014,847	Apr. 13, 1976	Mar. 29, 1977	B 497,571	4,009,997	Mar. 23, 1976	Mar. 1, 1977
B 487,529	4,022,750	Mar. 30, 1976	May 10, 1977	B 497,584	3,988,184	Feb. 24, 1976	Oct. 26, 1976
B 488,111	3,985,765	Jan. 13, 1976	Oct. 12, 1976	B 497,702	3,996,589	Mar. 2, 1976	Dec. 7, 1976
B 488,395	3,982,245	Jan. 27, 1976	Sep. 21, 1976	B 497,780	3,997,500	Feb. 24, 1976	Dec. 14, 1976
B 488,634	3,982,158	Jan. 20, 1976	Sep. 21, 1976	B 497,853	3,987,934	Feb. 17, 1976	Oct. 26, 1976
B 488,756	3,991,810	Mar. 16, 1976	Nov. 16, 1976	B 497,896	D 243,091	Apr. 6, 1976	Jan. 18, 1977
B 488,836	4,013,121	Mar. 30, 1976	Mar. 22, 1977	B 497,960	3,991,325	Jan. 20, 1976	Nov. 9, 1976
B 489,290	3,998,081	Feb. 17, 1976	Dec. 21, 1976	B 498,208	4,001,480	Apr. 13, 1976	Jan. 4, 1977
B 489,328	3,990,088	Jan. 20, 1976	Nov. 2, 1976	B 498,288	4,013,657	Mar. 23, 1976	Mar. 22, 1977
B 489,331	3,996,175	Feb. 17, 1976	Dec. 7, 1976	B 498,775	3,993,868	Mar. 2, 1976	Nov. 23, 1976
B 489,485	D 243,266	Apr. 13, 1976	Feb. 1, 1977	B 498,205	3,989,611	Feb. 10, 1976	Nov. 2, 1976
B 489,550	4,000,710	Mar. 16, 1976	Jan. 4, 1977	B 498,500	3,982,241	Jun. 20, 1976	Sep. 21, 1976
B 489,685	3,984,085	Feb. 24, 1976	Oct. 5, 1976	B 498,775	3,993,868	Mar. 2, 1976	Nov. 23, 1976
B 490,067	3,986,600	Jan. 27, 1976	Oct. 19, 1976	B 498,820	3,996,670	Mar. 9, 1976	Dec. 14, 1976
B 490,547	3,999,439	Feb. 24, 1976	Dec. 28, 1976	B 498,951	3,996,907	Mar. 2, 1976	Dec. 14, 1976
B 490,551	D 243,168	Apr. 6, 1976	Jan. 25, 1977	B 499,171	3,985,192	Jan. 27, 1976	Oct. 12, 1976
B 490,589	3,990,680	Feb. 3, 1976	Nov. 9, 1976	B 499,209	3,995,907	Feb. 24, 1976	Dec. 7, 1976
B 490,623	3,996,964	Mar. 2, 1976	Dec. 14, 1976	B 499,227	3,981,344	Jan. 27, 1976	Sep. 21, 1976
B 490,647	3,985,196	Feb. 24, 1976	Oct. 12, 1976	B 499,324	4,001,375	Mar. 16, 1976	Jan. 4, 1977
B 490,806	3,989,486	Feb. 3, 1976	Nov. 2, 1976	B 499,352	3,981,391	Jan. 27, 1976	Sep. 21, 1976
B 490,812	3,998,842	Mar. 30, 1976	Dec. 21, 1976	B 499,370	4,013,544	Mar. 30, 1976	Mar. 22, 1977
B 490,946	3,993,652	Feb. 17, 1976	Nov. 23, 1976	B 499,718	3,990,058	Jan. 27, 1976	Nov. 2, 1976
B 490,995	3,995,031	Feb. 3, 1976	Nov. 30, 1976	B 499,786	4,000,663	Mar. 16, 1976	Jan. 4, 1977
B 491,032	3,981,892	Feb. 10, 1976	Sep. 21, 1976	B 500,171	3,997,262	Mar. 30, 1976	Dec. 14, 1976
B 491,052	3,985,790	Mar. 2, 1976	Oct. 12, 1976	B 500,176	3,995,316	Feb. 3, 1976	Nov. 30, 1976
B 491,111	3,997,916	Feb. 17, 1976	Dec. 14, 1976	B 500,408	D 242,721	Mar. 16, 1976	Dec. 14, 1976
B 491,455	3,991,167	Feb. 3, 1976	Nov. 9, 1976	B 500,945	3,996,817	Feb. 24, 1976	Dec. 14, 1976
B 491,501	3,984,914	Jan. 13, 1976	Oct. 12, 1976	B 500,959	4,014,853	Apr. 13, 1976	Mar. 29, 1977
B 491,618	4,007,950	Mar. 16, 1976	Feb. 15, 1977	B 500,981	3,984,681	Jan. 27, 1976	Oct. 5, 1976
B 491,650	3,999,044	Mar. 9, 1976	Dec. 21, 1976	B 501,122	3,981,385	Feb. 17, 1976	Sep. 21, 1976
B 491,673	3,994,770	Feb. 17, 1976	Nov. 30, 1976	B 501,181	3,984,761	Feb. 10, 1976	Oct. 5, 1976
B 491,711	4,053,467	Mar. 23, 1976	Oct. 11, 1977	B 501,253	3,994,015	Feb. 3, 1976	Nov. 23, 1976
B 491,776	3,986,298	Mar. 16, 1976	Oct. 19, 1976	B 501,317	3,985,643	Jan. 13, 1976	Oct. 12, 1976
B 491,883	3,984,412	Feb. 3, 1976	Oct. 5, 1976	B 501,379	4,013,696	Mar. 30, 1976	Mar. 22, 1977
B 491,906	D 242,223	Feb. 10, 1976	Nov. 9, 1976	B 501,415	3,982,051	Jan. 13, 1976	Sep. 21, 1976
B 492,039	3,997,541	Feb. 24, 1976	Dec. 14, 1976	B 501,482	4,012,650	Jan. 13, 1976	Mar. 15, 1977
B 492,093	4,003,658	Mar. 23, 1976	Jan. 18, 1977	B 501,503	4,001,640	Mar. 2, 1976	Jan. 4, 1977
B 492,120	3,995,692	Feb. 24, 1976	Dec. 7, 1976	B 501,540	3,985,694	Jan. 13, 1976	Oct. 12, 1976
B 492,301	3,981,073	Jan. 13, 1976	Sep. 21, 1976	B 501,975	3,998,466	Mar. 2, 1976	Dec. 21, 1976
B 492,373	4,010,908	Mar. 30, 1976	Mar. 8, 1977	B 501,993	3,981,606	Jan. 13, 1976	Sep. 21, 1976
B 492,688	3,983,415	Jan. 20, 1976	Sep. 28, 1976	B 502,151	3,998,614	Mar. 23, 1976	Dec. 21, 1976
B 492,716	3,998,739	Mar. 2, 1976	Dec. 21, 1976	B 502,161	4,000,500	Mar. 2, 1976	Dec. 28, 1976
B 492,774	4,001,843	Mar. 9, 1976	Jan. 4, 1977	B 502,289	3,982,274	Jan. 13, 1976	Sep. 21, 1976
B 492,902	3,993,859	Feb. 24, 1976	Nov. 23, 1976	B 502,381	D 242,231	Mar. 16, 1976	Nov. 9, 1976
B 492,946	3,991,303	Jan. 27, 1976	Nov. 9, 1976	B 502,540	3,983,698	Jan. 13, 1976	Oct. 5, 1976
B 493,254	D 243,267	Apr. 13, 1976	Feb. 1, 1977	B 502,571	D 242,433	Apr. 6, 1976	Nov. 23, 1976
B 493,370	3,984,792	Mar. 16, 1976	Oct. 5, 1976	B 502,589	3,989,652	Jan. 27, 1976	Nov. 2, 1976
B 493,463	4,013,510	Mar. 23, 1976	Mar. 22, 1977	B 502,652	3,989,186	Feb. 24, 1976	Nov. 2, 1976
B 493,474	4,013,565	Mar. 23, 1976	Mar. 22, 1977	B 502,667	3,991,431	Feb. 24, 1976	Nov. 16, 1976
B 493,501	3,988,061	Feb. 3, 1976	Oct. 26, 1976	B 502,973	3,982,161	Jan. 27, 1976	Sep. 21, 1976
B 493,686	4,008,338	Mar. 23, 1976	Feb. 15, 1977	B 502,993	3,992,489	Feb. 17, 1976	Nov. 16, 1976
B 493,955	3,989,830	Mar. 9, 1976	Nov. 2, 1976	B 503,029	3,986,879	Jan. 27, 1976	Oct. 19, 1976
B 493,981	3,990,165	Mar. 9, 1976	Nov. 9, 1976	B 503,345	4,001,235	Feb. 24, 1976	Jan. 4, 1977
B 494,138	4,034,002	Mar. 23, 1976	July 5, 1977	B 503,371	4,009,401	Mar. 30, 1976	Feb. 22, 1977
B 494,234	3,983,808	Feb. 10, 1976	Oct. 5, 1976	B 503,436	3,988,819	Feb. 24, 1976	Nov. 2, 1976
B 494,339	4,001,255	Mar. 16, 1976	Jan. 4, 1977	B 503,456	4,007,702	Mar. 23, 1976	Feb. 15, 1977
B 494,383	3,991,289	Feb. 3, 1976	Nov. 9, 1976	B 503,521	3,999,646	Mar. 16, 1976	Dec. 28, 1976
B 494,439	4,057,521	Apr. 13, 1976	Nov. 8, 1977	B 503,579	3,989,680	Feb. 10, 1976	Nov. 2, 1976
B 494,440	4,056,502	Feb. 17, 1976	Nov. 1, 1977	B 503,618	3,997,782	Mar. 9, 1976	Dec. 14, 1976
B 494,669	3,991,104	Feb. 3, 1976	Nov. 9, 1976	B 503,742	3,989,756	Feb. 17, 1976	Nov. 2, 1976
B 494,691	3,987,457	Mar. 16, 1976	Oct. 19, 1976	B 503,776	4,016,000	Mar. 23, 1976	Apr. 5, 1977
B 494,806	3,989,210	Feb. 3, 1976	Nov. 2, 1976	B 503,780	3,990,055	Mar. 16, 1976	Nov. 2, 1976
B 494,944	3,992,469	Feb. 17, 1976	Nov. 16, 1976	B 503,817	3,988,307	Jan. 13, 1976	Oct. 26, 1976
B 495,124	4,060,968	Mar. 9, 1976	Dec. 6, 1977	B 504,056	3,993,923	Feb. 24, 1976	Nov. 23, 1976
B 495,185	3,999,166	Mar. 9, 1976	Dec. 21, 1976	B 504,061	3,987,534	Mar. 16, 1976	Oct. 26, 1976
B 495,331	4,000,456	Mar. 16, 1976	Dec. 28, 1976	B 504,156	3,999,048	Mar. 23, 1976	Dec. 21, 1976
B 495,402	3,983,988	Feb. 17, 1976	Oct. 5, 1976	B 504,169	3,981,219	Jan. 13, 1976	Sep. 21, 1976
B 495,408	4,000,222	Feb. 3, 1976	Dec. 28, 1976	B 504,404	3,996,499	Feb. 24, 1976	Dec. 7, 1976
B 495,489	3,984,571	Feb. 3, 1976	Oct. 5, 1976	B 504,405	4,007,401	Apr. 13, 1976	Feb. 8, 1977
B 495,550	3,993,666	Feb. 3, 1976	Nov. 23, 1976	B 504,439	3,999,398	Mar. 16, 1976	Dec. 28, 1976
B 495,554	3,993,665	Feb. 3, 1976	Nov. 23, 1976	B 504,503	3,999,210	Mar. 9, 1976	Dec. 21, 1976
B 495,759	3,989,998	Feb. 3, 1976	Nov. 2, 1976	B 504,582	4,005,138	Mar. 30, 1976	Jan. 25, 1977
B 495,781	4,013,699	Mar. 23, 1976	Mar. 22, 1977	B 504,778	3,986,650	Feb. 24, 1976	Oct. 19, 1976
B 495,903	3,995,997	Feb. 17, 1976	Dec. 7, 1976	B 504,877	3,997,564	Feb. 24, 1976	Dec. 14, 1976
B 496,430	3,991,140	Feb. 10, 1976	Nov. 9, 1976	B 504,899	3,991,273	Mar. 9, 1976	Nov. 9, 1976
B 496,431	3,985,894	Jan. 13, 1976	Oct. 12, 1976	B 505,126	3,981,745	Feb. 10, 1976	Sep. 21, 1976
B 496,487	3,982,261	Jan. 20, 1976	Sep. 21, 1976	B 505,221	4,013,627	Mar. 30, 1976	Mar. 22, 1977
B 496,500	3,985,962	Feb. 3, 1976	Oct. 12, 1976	B 505,582	4,001,659	Mar. 23, 1976	Jan. 4, 1977
B 496,502	3,987,444	Jan. 20, 1976	Oct. 19, 1976	B 505,689	3,987,631	Mar. 2, 1976	Oct. 26, 1976
B 496,792	3,999,959	Feb. 17, 1976	Dec. 28, 1976	B 505,813	3,985,175	Jan. 13, 1976	Oct. 12, 1976
B 496,964	3,999,219	Apr. 20, 1976	Dec. 21, 1976	B 506,144	3,991,147	Feb. 10, 1976	Nov. 9, 1976
B 496,999	3,983,804	Jan. 27, 1976	Oct. 5, 1976	B 506,148	3,988,319	Feb. 3, 1976	Oct. 26, 1976
B 497,021	3,985,039	Jan. 13, 1976	Oct. 12, 1976	B 506,167	3,990,652	Feb. 10, 1976	Nov. 9, 1976

CROSS REFERENCE OF PUBLISHED PATENT APPLICATIONS PUBLISHED UNDER SECOND TRIAL VOLUNTARY PROTEST PROGRAM AND NOW ISSUED AS PATENTS—CONTINUED

DOCUMENT NUMBER	PATENT NUMBER	PUB. DATE	ISSUE DATE	DOCUMENT NUMBER	PATENT NUMBER	PUB. DATE	ISSUE DATE
B 506,286	3,982,085	Jan. 20, 1976	Sep. 21, 1976	B 516,032	3,986,634	Jan. 27, 1976	Oct. 19, 1976
B 506,461	3,987,348	Jan. 20, 1976	Oct. 19, 1976	B 516,047	3,985,741	Feb. 10, 1976	Oct. 12, 1976
B 506,566	3,985,402	Jan. 20, 1976	Oct. 12, 1976	B 516,060	3,983,572	Feb. 17, 1976	Sep. 28, 1976
B 506,624	3,999,695	Mar. 9, 1976	Dec. 28, 1976	B 516,069	3,986,208	Mar. 16, 1976	Oct. 12, 1976
B 506,648	3,994,857	Feb. 3, 1976	Nov. 30, 1976	B 516,296	3,984,404	Feb. 3, 1976	Oct. 5, 1976
B 506,744	3,981,176	Jan. 13, 1976	Sep. 21, 1976	B 516,537	3,996,784	Feb. 17, 1976	Dec. 14, 1976
B 506,760	4,012,835	Apr. 13, 1976	Mar. 22, 1977	B 516,564	3,993,931	Feb. 17, 1976	Nov. 23, 1976
B 506,839	4,005,389	Mar. 23, 1976	Jan. 25, 1977	B 516,609	3,994,486	Feb. 24, 1976	Nov. 30, 1976
B 506,840	4,002,928	Mar. 23, 1976	Jan. 11, 1977	B 516,625	4,013,542	Mar. 30, 1976	Mar. 22, 1977
B 506,916	3,986,140	Feb. 3, 1976	Oct. 12, 1976	B 516,804	3,991,209	Mar. 23, 1976	Nov. 9, 1976
B 506,926	3,993,232	Feb. 17, 1976	Nov. 23, 1976	B 516,825	3,988,885	Feb. 3, 1976	Nov. 2, 1976
B 507,087	3,991,389	Feb. 17, 1976	Nov. 9, 1976	B 517,273	D 242,798	Mar. 16, 1976	Dec. 21, 1976
B 507,131	4,000,499	Mar. 2, 1976	Dec. 28, 1976	B 517,504	3,999,855	Mar. 9, 1976	Dec. 28, 1976
B 507,166	4,014,738	Apr. 13, 1976	Mar. 29, 1977	B 517,668	4,013,423	Apr. 6, 1976	Mar. 22, 1977
B 507,396	3,995,167	Feb. 10, 1976	Nov. 30, 1976	B 517,762	3,986,065	Mar. 16, 1976	Oct. 12, 1976
B 507,476	3,994,680	Feb. 10, 1976	Nov. 30, 1976	B 517,858	4,000,999	Feb. 17, 1976	Jan. 4, 1977
B 507,647	3,982,240	Jan. 27, 1976	Sep. 21, 1976	B 517,956	D 243,088	Apr. 6, 1976	Jan. 18, 1977
B 508,118	3,992,283	Feb. 17, 1976	Nov. 16, 1976	B 517,957	D 243,089	Apr. 6, 1976	Jan. 18, 1977
B 508,119	3,992,285	Feb. 17, 1976	Nov. 16, 1976	B 518,076	4,014,914	Mar. 30, 1976	Mar. 29, 1977
B 508,369	3,985,847	Jan. 13, 1976	Oct. 12, 1976	B 518,226	3,993,509	Feb. 10, 1976	Nov. 23, 1976
B 508,639	4,004,194	Mar. 23, 1976	Jan. 18, 1977	B 518,326	4,008,282	Mar. 23, 1976	Feb. 15, 1977
B 508,817	3,989,891	Feb. 3, 1976	Nov. 2, 1976	B 518,656	3,989,732	Feb. 17, 1976	Nov. 2, 1976
B 508,878	3,994,117	Feb. 3, 1976	Nov. 30, 1976	B 518,859	3,989,971	Feb. 3, 1976	Nov. 2, 1976
B 508,940	3,981,321	Feb. 17, 1976	Sep. 21, 1976	B 518,999	3,990,323	Feb. 3, 1976	Nov. 9, 1976
B 508,961	3,987,477	Feb. 3, 1976	Oct. 19, 1976	B 519,095	3,993,621	Feb. 24, 1976	Nov. 23, 1976
B 509,043	3,996,767	Feb. 24, 1976	Dec. 14, 1976	B 519,355	4,014,829	Apr. 13, 1976	Mar. 29, 1977
B 509,165	3,999,155	Mar. 2, 1976	Dec. 21, 1976	B 519,377	3,987,223	Jan. 27, 1976	Oct. 19, 1976
B 509,185	3,989,996	Feb. 3, 1976	Nov. 2, 1976	B 519,446	3,985,815	Feb. 24, 1976	Oct. 12, 1976
B 509,238	3,982,399	Feb. 24, 1976	Sep. 28, 1976	B 519,485	3,991,134	Feb. 10, 1976	Nov. 9, 1976
B 509,474	3,997,260	Feb. 17, 1976	Dec. 14, 1976	B 519,486	3,992,481	Feb. 17, 1976	Nov. 16, 1976
B 509,586	4,006,645	Feb. 3, 1976	Feb. 8, 1977	B 519,487	3,992,337	Feb. 17, 1976	Nov. 16, 1976
B 509,606	3,989,986	Feb. 3, 1976	Nov. 2, 1976	B 519,599	3,995,350	Feb. 17, 1976	Dec. 7, 1976
B 509,772	3,999,004	Mar. 16, 1976	Dec. 21, 1976	B 519,623	4,012,049	Apr. 6, 1976	Mar. 15, 1977
B 509,819	4,014,712	Apr. 13, 1976	Mar. 29, 1977	B 519,680	4,014,660	Mar. 30, 1976	Mar. 29, 1977
B 510,026	4,016,763	Apr. 13, 1976	Apr. 12, 1977	B 519,932	3,988,618	Feb. 3, 1976	Oct. 26, 1976
B 510,184	D 242,784	Apr. 6, 1976	Dec. 21, 1976	B 519,979	3,982,067	Feb. 3, 1976	Sep. 21, 1976
B 510,278	4,008,972	Mar. 30, 1976	Feb. 22, 1977	B 520,063	3,989,934	Mar. 2, 1976	Nov. 2, 1976
B 510,281	3,993,215	Mar. 9, 1976	Nov. 23, 1976	B 520,075	3,989,935	Feb. 24, 1976	Nov. 2, 1976
B 510,346	D 242,207	Feb. 10, 1976	Nov. 9, 1976	B 520,076	3,989,936	Mar. 2, 1976	Nov. 2, 1976
B 510,458	4,000,221	Feb. 10, 1976	Dec. 28, 1976	B 520,082	3,989,937	Mar. 23, 1976	Nov. 2, 1976
B 510,521	3,990,656	Mar. 2, 1976	Nov. 9, 1976	B 520,115	4,003,072	Mar. 23, 1976	Jan. 11, 1977
B 510,588	3,981,539	Jan. 27, 1976	Sep. 21, 1976	B 520,227	4,002,823	Mar. 30, 1976	Jan. 11, 1977
B 510,677	3,989,541	Feb. 24, 1976	Nov. 2, 1976	B 520,256	3,985,730	Jan. 13, 1976	Oct. 12, 1976
B 510,682	4,000,978	Mar. 30, 1976	Jan. 4, 1977	B 520,277	3,995,635	Feb. 17, 1976	Dec. 7, 1976
B 510,836	4,013,795	Mar. 23, 1976	Mar. 22, 1977	B 520,341	3,992,028	Mar. 16, 1976	Nov. 16, 1976
B 510,850	3,989,841	Feb. 3, 1976	Nov. 2, 1976	B 520,384	3,986,592	Jan. 27, 1976	Oct. 19, 1976
B 510,855	3,981,059	Jan. 27, 1976	Sep. 21, 1976	B 520,514	3,988,308	Mar. 9, 1976	Oct. 26, 1976
B 511,907	3,999,622	Mar. 30, 1976	Dec. 28, 1976	B 520,534	3,997,119	Feb. 17, 1976	Dec. 14, 1976
B 510,998	3,992,336	Feb. 10, 1976	Nov. 16, 1976	B 520,543	3,986,768	Jan. 27, 1976	Oct. 19, 1976
B 511,002	3,998,717	Mar. 2, 1976	Dec. 21, 1976	B 520,546	4,001,133	Mar. 2, 1976	Jan. 4, 1977
B 511,099	3,990,162	Feb. 3, 1976	Nov. 9, 1976	B 520,613	3,991,341	Mar. 16, 1976	Nov. 9, 1976
B 511,156	3,981,364	Jan. 27, 1976	Sep. 21, 1976	B 520,658	3,998,778	Mar. 9, 1976	Dec. 21, 1976
B 511,346	3,984,072	Jan. 27, 1976	Oct. 5, 1976	B 520,878	4,014,849	Apr. 6, 1976	Mar. 29, 1977
B 511,407	3,981,485	Feb. 10, 1976	Sep. 21, 1976	B 520,884	4,000,433	Mar. 16, 1976	Dec. 28, 1976
B 511,454	3,982,333	Feb. 24, 1976	Sep. 28, 1976	B 520,924	3,982,113	Jan. 27, 1976	Sep. 21, 1976
B 511,665	4,001,037	Mar. 2, 1976	Jan. 4, 1977	B 520,928	3,983,617	Jan. 13, 1976	Oct. 5, 1976
B 511,885	3,981,346	Jun. 27, 1976	Sep. 21, 1976	B 520,952	4,000,876	Mar. 16, 1976	Jan. 4, 1977
B 511,886	3,989,991	Feb. 3, 1976	Nov. 2, 1976	B 520,995	4,009,996	Mar. 23, 1976	Mar. 1, 1977
B 511,909	3,981,183	Feb. 17, 1976	Sep. 21, 1976	B 521,025	3,998,838	Mar. 23, 1976	Dec. 21, 1976
B 512,324	3,985,084	Feb. 17, 1976	Oct. 12, 1976	B 521,044	3,983,435	Feb. 24, 1976	Sep. 28, 1976
B 512,547	3,984,193	Jan. 13, 1976	Oct. 5, 1976	B 521,045	3,983,433	Feb. 24, 1976	Sep. 28, 1976
B 512,745	3,981,294	Jan. 13, 1976	Sep. 21, 1976	B 521,046	3,983,434	Feb. 24, 1976	Sep. 28, 1976
B 512,779	4,014,897	Apr. 13, 1976	Mar. 29, 1977	B 521,125	3,994,865	Feb. 10, 1976	Nov. 30, 1976
B 512,818	3,997,363	Apr. 6, 1976	Dec. 14, 1976	B 521,126	3,997,510	Feb. 10, 1976	Dec. 14, 1976
B 512,849	3,982,141	Feb. 3, 1976	Sep. 21, 1976	B 521,127	3,996,201	Feb. 17, 1976	Dec. 7, 1976
B 512,964	3,995,279	Feb. 10, 1976	Nov. 30, 1976	B 521,128	3,997,511	Feb. 10, 1976	Dec. 14, 1976
B 513,014	3,991,113	Feb. 10, 1976	Nov. 9, 1976	B 521,324	3,983,143	Jan. 27, 1976	Sep. 28, 1976
B 513,027	3,995,143	Feb. 17, 1976	Nov. 30, 1976	B 521,480	3,982,665	Jan. 13, 1976	Sep. 28, 1976
B 513,134	4,006,764	Mar. 23, 1976	Feb. 8, 1977	B 521,600	3,981,458	Jan. 27, 1976	Sep. 21, 1976
B 513,280	3,988,211	Jan. 20, 1976	Oct. 26, 1976	B 521,612	4,000,251	Mar. 9, 1976	Dec. 28, 1976
B 513,368	3,982,138	Feb. 3, 1976	Sep. 21, 1976	B 521,620	3,983,749	Jan. 27, 1976	Oct. 5, 1976
B 513,706	3,986,064	Jan. 13, 1976	Oct. 12, 1976	B 521,643	3,997,567	Mar. 2, 1976	Dec. 14, 1976
B 513,756	3,993,869	Feb. 3, 1976	Nov. 23, 1976	B 521,711	3,989,835	Feb. 10, 1976	Nov. 2, 1976
B 513,781	4,001,324	Feb. 24, 1976	Jan. 4, 1977	B 521,793	3,996,981	Feb. 24, 1976	Dec. 14, 1976
B 513,789	3,981,599	Feb. 3, 1976	Sep. 21, 1976	B 521,984	3,983,220	Feb. 17, 1976	Sep. 28, 1976
B 513,791	4,008,608	Mar. 30, 1976	Feb. 22, 1977	B 521,985	4,012,404	Mar. 23, 1976	Mar. 15, 1977
B 514,259	4,013,649	Mar. 23, 1976	Mar. 22, 1977	B 521,986	3,981,607	Feb. 3, 1976	Sep. 21, 1976
B 514,687	3,986,522	Jan. 27, 1976	Oct. 19, 1976	B 522,009	3,995,444	Feb. 17, 1976	Dec. 7, 1976
B 514,839	4,033,816	Mar. 2, 1976	July 5, 1977	B 522,038	3,993,119	Feb. 3, 1976	Nov. 23, 1976
B 515,135	3,990,085	Feb. 17, 1976	Nov. 2, 1976	B 522,227	3,992,904	Mar. 30, 1976	Nov. 23, 1976
B 515,303	3,987,939	Jan. 20, 1976	Oct. 26, 1976	B 522,309	3,991,603	Feb. 3, 1976	Nov. 16, 1976
B 515,368	4,014,733	Apr. 6, 1976	Mar. 29, 1977	B 522,354	3,984,959	Jan. 20, 1976	Oct. 12, 1976
B 515,452	3,995,243	Feb. 10, 1976	Nov. 30, 1976	B 522,446	4,001,194	Mar. 30, 1976	Jan. 4, 1977
B 515,455	3,982,149	Jan. 27, 1976	Sep. 21, 1976	B 522,537	3,999,587	Mar. 30, 1976	Dec. 28, 1976
B 515,642	4,001,258	Feb. 24, 1976	Jan. 4, 1977	B 522,567	3,996,238	Feb. 17, 1976	Dec. 7, 1976
B 515,908	3,984,676	Jan. 20, 1976	Oct. 5, 1976	B 522,568	D 242,785	Apr. 6, 1976	Dec. 21, 1976
B 516,002	3,988,638	Jan. 13, 1976	Oct. 26, 1976	B 522,577	3,982,123	Jan. 27, 1976	Sep. 21, 1976

CROSS REFERENCE OF PUBLISHED PATENT APPLICATIONS PUBLISHED UNDER SECOND TRIAL VOLUNTARY PROTEST PROGRAM AND NOW ISSUED AS PATENTS—CONTINUED

DOCUMENT NUMBER	PATENT NUMBER	PUB. DATE	ISSUE DATE
B 522,629	4,001,155	Mar. 16, 1976	Jan. 4, 1977
B 523,226	4,006,367	Mar. 23, 1976	Feb. 1, 1977
B 523,696	3,986,071	Jan. 13, 1976	Oct. 12, 1976
B 523,885	3,981,040	Feb. 17, 1976	Sep. 21, 1976
B 523,952	3,988,707	Mar. 23, 1976	Oct. 26, 1976
B 524,026	3,992,206	Feb. 10, 1976	Nov. 16, 1976
B 524,121	3,982,536	Feb. 3, 1976	Sep. 28, 1976
B 524,179	3,985,872	Jan. 13, 1976	Oct. 12, 1976
B 524,464	3,985,580	Feb. 10, 1976	Oct. 12, 1976
B 524,806	4,000,065	Mar. 2, 1976	Dec. 28, 1976
B 524,849	4,014,938	Mar. 23, 1976	Mar. 29, 1977
B 525,133	3,996,481	Mar. 23, 1976	Dec. 7, 1976
B 525,204	4,001,109	Mar. 16, 1976	Jan. 4, 1977
B 525,809	3,985,040	Feb. 24, 1976	Oct. 12, 1976
B 525,961	3,985,557	Jan. 13, 1976	Oct. 12, 1976
B 526,106	3,990,073	Jan. 27, 1976	Nov. 2, 1976
B 526,190	3,982,129	Feb. 17, 1976	Sep. 21, 1976
B 526,279	4,013,138	Apr. 13, 1976	Mar. 22, 1977
B 526,289	3,992,641	Feb. 24, 1976	Nov. 16, 1976
B 526,388	3,992,017	Feb. 3, 1976	Nov. 16, 1976
B 526,445	3,984,978	Jan. 20, 1976	Oct. 12, 1976
B 526,447	4,000,052	Feb. 24, 1976	Dec. 28, 1976
B 526,510	3,989,708	Jan. 20, 1976	Nov. 2, 1976
B 526,654	4,011,534	Mar. 23, 1976	Mar. 8, 1977
B 526,942	4,013,700	Mar. 30, 1976	Mar. 22, 1977
B 526,997	3,985,695	Jan. 13, 1976	Oct. 12, 1976
B 527,040	4,013,515	Mar. 23, 1976	Mar. 22, 1977
B 527,054	3,981,559	Feb. 17, 1976	Sep. 21, 1976
B 527,171	3,998,248	Mar. 9, 1976	Dec. 21, 1976
B 527,187	3,995,202	Feb. 17, 1976	Nov. 30, 1976
B 527,333	3,999,732	Mar. 23, 1976	Dec. 28, 1976
B 527,669	3,982,206	Jan. 13, 1976	Sep. 21, 1976
B 527,693	3,995,233	Feb. 3, 1976	Nov. 30, 1976
B 527,788	D 242,337	Feb. 10, 1976	Nov. 16, 1976
B 527,972	4,000,016	Mar. 9, 1976	Dec. 28, 1976
B 527,999	3,981,682	Feb. 3, 1976	Sep. 21, 1976
B 528,297	4,001,138	Mar. 16, 1976	Jan. 4, 1977
B 528,303	3,991,023	Feb. 10, 1976	Nov. 9, 1976
B 528,401	3,991,619	Feb. 3, 1976	Nov. 16, 1976
B 528,756	3,990,476	Feb. 3, 1976	Nov. 9, 1976
B 528,761	3,982,221	Feb. 10, 1976	Sep. 21, 1976
B 528,962	3,989,666	Feb. 24, 1976	Nov. 2, 1976
B 528,966	3,989,667	Feb. 24, 1976	Nov. 2, 1976
B 529,156	3,989,158	Jan. 13, 1976	Nov. 2, 1976
B 529,194	4,000,776	Mar. 23, 1976	Jan. 4, 1977
B 529,214	4,013,004	Apr. 20, 1976	Mar. 22, 1977
B 529,659	3,996,875	Feb. 24, 1976	Dec. 14, 1976
B 529,836	3,994,345	Feb. 3, 1976	Nov. 30, 1976
B 529,925	4,014,003	Mar. 30, 1976	Mar. 22, 1977
B 529,974	3,987,098	Feb. 17, 1976	Oct. 19, 1976
B 530,174	3,993,635	Feb. 24, 1976	Nov. 23, 1976
B 530,255	3,996,103	Mar. 2, 1976	Dec. 7, 1976
B 530,263	4,009,736	Mar. 30, 1976	Mar. 1, 1977
B 530,285	4,013,903	Apr. 6, 1976	Mar. 22, 1977
B 530,303	4,006,029	Mar. 23, 1976	Feb. 1, 1977
B 530,318	3,985,752	Jan. 13, 1976	Oct. 12, 1976
B 530,437	4,014,857	Apr. 13, 1976	Mar. 29, 1977
B 530,569	3,999,865	Mar. 16, 1976	Dec. 28, 1976
B 530,580	4,001,151	Mar. 2, 1976	Jan. 4, 1977
B 530,605	3,989,064	Feb. 3, 1976	Nov. 2, 1976
B 530,709	4,012,944	Apr. 6, 1976	Mar. 22, 1977
B 530,813	3,986,131	Feb. 17, 1976	Oct. 12, 1976
B 530,873	4,001,016	Feb. 17, 1976	Jan. 4, 1977
B 530,925	3,983,161	Feb. 24, 1976	Sep. 28, 1976
B 531,096	3,984,415	Feb. 10, 1976	Oct. 5, 1976
B 531,267	3,997,040	Feb. 24, 1976	Dec. 14, 1976
B 531,425	3,992,595	Feb. 3, 1976	Nov. 16, 1976
B 531,566	3,997,820	Mar. 16, 1976	Dec. 14, 1976
B 531,686	3,990,017	Mar. 23, 1976	Nov. 2, 1976
B 531,753	3,988,843	Mar. 2, 1976	Nov. 2, 1976
B 531,929	3,986,067	Jan. 20, 1976	Oct. 12, 1976
B 532,005	3,992,397	Feb. 24, 1976	Nov. 16, 1976
B 532,140	4,001,299	Mar. 2, 1976	Jan. 4, 1977
B 532,319	3,990,292	Feb. 3, 1976	Nov. 9, 1976
B 532,326	3,993,959	Mar. 23, 1976	Nov. 23, 1976
B 532,424	D 242,292	Feb. 10, 1976	Nov. 9, 1976
B 532,476	3,992,756	Feb. 3, 1976	Nov. 23, 1976
B 532,477	4,014,895	Apr. 13, 1976	Mar. 29, 1977
B 532,679	4,010,706	Apr. 6, 1976	Mar. 8, 1977
B 532,901	3,984,318	Jan. 13, 1976	Oct. 5, 1976
B 532,969	3,981,706	Jan. 13, 1976	Sep. 21, 1976
B 532,976	4,000,837	Mar. 23, 1976	Jan. 4, 1977
B 533,056	3,983,969	Jan. 13, 1976	Oct. 5, 1976
B 533,259	3,999,556	Feb. 24, 1976	Dec. 28, 1976
B 533,454	3,996,566	Mar. 2, 1976	Dec. 7, 1976
B 533,580	3,982,255	Feb. 3, 1976	Sep. 21, 1976
B 533,652	4,000,196	Mar. 23, 1976	Dec. 28, 1976

DOCUMENT NUMBER	PATENT NUMBER	PUB. DATE	ISSUE DATE
B 533,734	3,984,799	Jan. 27, 1976	Oct. 5, 1976
B 533,968	3,986,576	Jan. 27, 1976	Oct. 19, 1976
B 534,016	3,983,381	Feb. 3, 1976	Sep. 28, 1976
B 534,313	3,981,675	Jan. 27, 1976	Sep. 21, 1976
B 534,314	3,981,786	Feb. 10, 1976	Sep. 21, 1976
B 534,333	3,981,480	Feb. 17, 1976	Sep. 21, 1976
B 534,334	D 242,722	Mar. 16, 1976	Dec. 14, 1976
B 534,443	3,989,970	Jan. 27, 1976	Nov. 2, 1976
B 534,574	3,995,624	Feb. 24, 1976	Dec. 7, 1976
B 534,591	3,991,141	Feb. 17, 1976	Nov. 9, 1976
B 534,680	4,014,904	Apr. 20, 1976	Mar. 29, 1977
B 534,767	3,982,180	Feb. 3, 1976	Sep. 21, 1976
B 534,915	4,012,668	Mar. 23, 1976	Mar. 15, 1977
B 534,991	3,983,517	Jan. 27, 1976	Sep. 28, 1976
B 535,076	3,981,718	Jan. 20, 1976	Sep. 21, 1976
B 535,209	4,001,873	Mar. 16, 1976	Jan. 4, 1977
B 535,256	3,999,150	Mar. 23, 1976	Dec. 21, 1976
B 535,268	3,999,045	Mar. 30, 1976	Dec. 21, 1976
B 535,386	3,981,150	Jan. 13, 1976	Sep. 21, 1976
B 535,391	3,981,386	Jan. 27, 1976	Sep. 21, 1976
B 535,411	3,990,543	Feb. 24, 1976	Nov. 9, 1976
B 535,437	3,997,555	Feb. 24, 1976	Dec. 14, 1976
B 535,448	3,997,123	Mar. 16, 1976	Dec. 14, 1976
B 535,466	3,981,309	Jan. 27, 1976	Sep. 21, 1976
B 535,813	3,981,819	Jan. 27, 1976	Sep. 21, 1976
B 535,928	3,981,466	Jan. 13, 1976	Sep. 21, 1976
B 536,009	3,982,112	Jan. 27, 1976	Sep. 21, 1976
B 536,082	3,997,783	Mar. 16, 1976	Dec. 14, 1976
B 536,322	4,001,272	Mar. 23, 1976	Jan. 4, 1977
B 536,403	3,998,341	Mar. 23, 1976	Dec. 21, 1976
B 536,511	3,995,989	Mar. 9, 1976	Dec. 7, 1976
B 536,675	3,985,773	Jan. 20, 1976	Oct. 12, 1976
B 536,923	4,007,828	Mar. 30, 1976	Feb. 15, 1977
B 536,935	3,985,729	Jan. 13, 1976	Oct. 12, 1976
B 537,058	4,000,969	Mar. 23, 1976	Jan. 4, 1977
B 537,102	3,981,829	Jan. 13, 1976	Sep. 21, 1976
B 537,709	3,981,368	Jan. 13, 1976	Sep. 21, 1976
B 537,711	3,985,748	Jan. 13, 1976	Oct. 12, 1976
B 537,722	3,985,423	Feb. 3, 1976	Oct. 12, 1976
B 537,903	3,986,492	Jan. 20, 1976	Oct. 19, 1976
B 537,990	4,057,651	Jan. 13, 1976	Nov. 8, 1977
B 538,472	3,992,884	Feb. 3, 1976	Nov. 23, 1976
B 538,491	3,982,928	Feb. 17, 1976	Sep. 28, 1976
B 538,686	3,982,199	Jan. 13, 1976	Sep. 21, 1976
B 538,753	3,993,642	Feb. 10, 1976	Nov. 23, 1976
B 539,374	3,996,229	Mar. 9, 1976	Dec. 7, 1976
B 539,746	3,983,423	Feb. 17, 1976	Sep. 28, 1976
B 540,078	3,984,701	Jan. 13, 1976	Oct. 5, 1976
B 540,218	3,986,108	Feb. 10, 1976	Oct. 12, 1976
B 540,632	3,981,600	Jan. 13, 1976	Sep. 21, 1976
B 540,703	4,013,206	Apr. 13, 1976	Mar. 22, 1977
B 540,767	3,986,010	Mar. 16, 1976	Oct. 12, 1976
B 540,872	3,982,135	Jan. 20, 1976	Sep. 21, 1976
B 540,888	4,005,528	Mar. 30, 1976	Feb. 1, 1977
B 541,015	3,993,208	Jan. 27, 1976	Nov. 23, 1976
B 541,376	3,981,690	Feb. 17, 1976	Sep. 21, 1976
B 541,415	3,982,080	Feb. 3, 1976	Sep. 21, 1976
B 541,464	3,995,424	Feb. 17, 1976	Dec. 7, 1976
B 541,496	3,982,232	Jan. 27, 1976	Sep. 21, 1976
B 541,501	4,005,826	Apr. 13, 1976	Feb. 1, 1977
B 541,517	3,986,156	Jan. 13, 1976	Oct. 12, 1976
B 541,710	3,994,472	Feb. 24, 1976	Nov. 30, 1976
B 542,135	3,986,939	Feb. 10, 1976	Oct. 19, 1976
B 542,158	3,981,886	Jan. 13, 1976	Sep. 21, 1976
B 542,226	3,993,748	Feb. 24, 1976	Nov. 23, 1976
B 542,258	4,013,536	Mar. 23, 1976	Mar. 22, 1977
B 543,078	3,995,687	Feb. 17, 1976	Dec. 7, 1976
B 543,941	3,985,528	Jan. 13, 1976	Oct. 12, 1976
B 544,034	3,997,175	Feb. 17, 1976	Dec. 14, 1976
B 544,476	3,993,585	Feb. 24, 1976	Nov. 23, 1976
B 544,899	3,994,962	Feb. 17, 1976	Nov. 30, 1976
B 544,961	3,983,492	Jan. 13, 1976	Sep. 28, 1976
B 545,050	3,982,073	Jan. 20, 1976	Sep. 21, 1976
B 545,265	D 243,090	Apr. 13, 1976	Jan. 18, 1977
B 545,299	4,001,259	Feb. 24, 1976	Jan. 4, 1977
B 545,344	4,012,746	Mar. 30, 1976	Mar. 15, 1977
B 545,464	3,992,387	Feb. 10, 1976	Nov. 16, 1976
B 545,630	3,981,337	Jan. 27, 1976	Sep. 21, 1976
B 545,777	4,004,906	Jan. 27, 1976	Jan. 25, 1977
B 545,856	4,006,939	Mar. 30, 1976	Feb. 8, 1977
B 545,935	3,990,337	Jan. 27, 1976	Nov. 9, 1976
B 545,945	3,995,260	Jan. 27, 1976	Nov. 30, 1976
B 546,097	3,999,309	Mar. 23, 1976	Dec. 28, 1976
B 546,295	3,987,070	Jan. 20, 1976	Oct. 19, 1976
B 546,426	3,982,063	Jan. 27, 1976	Sep. 21, 1976
B 546,631	3,983,729	Feb. 3, 1976	Oct. 5, 1976
B 546,665	3,990,062	Jan. 20, 1976	Nov. 2, 1976

CROSS REFERENCE OF PUBLISHED PATENT APPLICATIONS PUBLISHED UNDER SECOND TRIAL VOLUNTARY PROTEST PROGRAM AND NOW ISSUED AS PATENTS—CONTINUED

DOCUMENT NUMBER	PATENT NUMBER	PUB. DATE	ISSUE DATE
B 546,677	4,015,654	Apr. 6, 1976	Apr. 5, 1977
B 546,911	3,981,058	Jan. 13, 1976	Sep. 21, 1976
B 546,922	3,987,742	Mar. 16, 1976	Oct. 26, 1976
B 547,016	3,999,741	Mar. 23, 1976	Dec. 28, 1976
B 547,208	4,001,218	Feb. 24, 1976	Jan. 4, 1977
B 547,547	3,997,670	Feb. 24, 1976	Dec. 14, 1976
B 547,994	3,990,081	Jan. 20, 1976	Nov. 2, 1976
B 548,028	3,991,517	Feb. 3, 1976	Nov. 16, 1976
B 548,058	3,983,050	Feb. 17, 1976	Sep. 28, 1976
B 548,155	3,981,477	Jan. 13, 1976	Sep. 21, 1976
B 548,440	3,993,401	Feb. 3, 1976	Nov. 23, 1976
B 548,302	3,983,414	Feb. 17, 1976	Sep. 28, 1976
B 548,440	3,993,401	Feb. 3, 1976	Nov. 23, 1976
B 548,462	D 242,283	Feb. 10, 1976	Nov. 9, 1976
B 548,688	3,995,984	Mar. 9, 1976	Dec. 7, 1976
B 548,719	3,990,553	Feb. 17, 1976	Nov. 9, 1976
B 548,978	3,998,139	Mar. 9, 1976	Dec. 21, 1976
B 549,198	3,981,975	Jan. 13, 1976	Sep. 21, 1976
B 549,244	3,981,125	Jan. 27, 1976	Sep. 21, 1976
B 549,394	3,981,611	Jan. 27, 1976	Sep. 21, 1976
B 549,931	3,986,141	Jan. 20, 1976	Oct. 12, 1976
B 549,964	3,995,899	Feb. 24, 1976	Dec. 7, 1976
B 550,693	3,982,194	Jan. 20, 1976	Sep. 21, 1976
B 550,744	3,993,550	Feb. 17, 1976	Nov. 23, 1976
B 550,810	4,000,910	Mar. 23, 1976	Jan. 4, 1977
B 551,133	3,996,740	Mar. 2, 1976	Dec. 14, 1976
B 551,463	3,996,254	Feb. 17, 1976	Dec. 7, 1976
B 551,527	3,982,599	Jan. 13, 1976	Sep. 28, 1976
B 551,809	3,996,743	Feb. 24, 1976	Dec. 14, 1976
B 551,952	Re. 29,059	Mar. 2, 1976	Dec. 7, 1976
B 552,006	3,992,129	Feb. 3, 1976	Nov. 16, 1976
B 552,489	3,994,864	Feb. 10, 1976	Nov. 30, 1976
B 552,498	3,983,139	Jan. 13, 1976	Sep. 28, 1976
B 552,508	4,001,250	Mar. 16, 1976	Jan. 4, 1977
B 552,629	3,994,773	Mar. 23, 1976	Nov. 30, 1976
B 552,709	4,001,467	Mar. 23, 1976	Jan. 4, 1977
B 552,932	3,989,292	Feb. 3, 1976	Nov. 2, 1976
B 553,421	4,001,146	Mar. 23, 1976	Jan. 4, 1977
B 553,460	3,990,019	Feb. 3, 1976	Nov. 2, 1976
B 553,584	3,992,456	Feb. 17, 1976	Nov. 16, 1976
B 553,629	3,999,242	Feb. 24, 1976	Dec. 28, 1976
B 554,039	3,999,944	Feb. 24, 1976	Dec. 28, 1976
B 554,164	4,001,465	Mar. 9, 1976	Jan. 4, 1977
B 554,283	3,981,152	Jan. 27, 1976	Sep. 21, 1976
B 554,291	4,001,209	Mar. 9, 1976	Jan. 4, 1977
B 554,380	4,001,147	Mar. 9, 1976	Jan. 4, 1977
B 554,594	3,985,960	Jan. 20, 1976	Oct. 12, 1976
B 554,655	4,015,048	Feb. 24, 1976	Mar. 29, 1977
B 554,848	4,001,265	Feb. 24, 1976	Jan. 4, 1977
B 554,939	3,994,013	Feb. 10, 1976	Nov. 23, 1976
B 555,146	4,007,636	Apr. 20, 1976	Feb. 15, 1977
B 555,437	3,991,152	Feb. 3, 1976	Nov. 9, 1976
B 555,456	3,993,423	Mar. 30, 1976	Nov. 23, 1976
B 555,772	3,982,641	Jan. 13, 1976	Sep. 28, 1976
B 556,057	3,985,349	Jan. 13, 1976	Oct. 12, 1976
B 556,496	3,990,244	Mar. 16, 1976	Nov. 9, 1976
B 556,897	3,992,972	Feb. 3, 1976	Nov. 23, 1976
B 557,153	3,991,603	Feb. 3, 1976	Nov. 16, 1976
B 557,274	4,016,375	Mar. 23, 1976	Apr. 5, 1977
B 557,299	3,990,357	Feb. 3, 1976	Nov. 9, 1976
B 557,621	3,990,800	Feb. 3, 1976	Nov. 9, 1976
B 557,721	4,013,435	Mar. 23, 1976	Mar. 22, 1977
B 557,856	3,991,019	Feb. 10, 1976	Nov. 9, 1976
B 558,220	3,990,009	Jan. 27, 1976	Nov. 2, 1976
B 558,251	3,981,289	Jan. 13, 1976	Sep. 21, 1976
B 558,813	3,989,188	Feb. 3, 1976	Nov. 2, 1976
B 558,818	3,983,762	Jan. 13, 1976	Oct. 5, 1976
B 558,819	3,990,160	Feb. 3, 1976	Nov. 9, 1976
B 558,973	3,981,126	Feb. 10, 1976	Sep. 21, 1976
B 559,111	3,984,854	Feb. 24, 1976	Oct. 5, 1976
B 559,142	4,001,124	Mar. 2, 1976	Jan. 4, 1977
B 559,394	4,016,094	Apr. 20, 1976	Apr. 5, 1977
B 559,441	4,013,609	Mar. 23, 1976	Mar. 22, 1977
B 559,631	4,011,406	Mar. 23, 1976	Mar. 8, 1977
B 559,697	3,995,770	Mar. 16, 1976	Dec. 7, 1976
B 559,700	4,001,189	Mar. 23, 1976	Jan. 4, 1977
B 559,701	4,001,190	Mar. 23, 1976	Jan. 4, 1977
B 559,737	3,984,668	Jan. 20, 1976	Oct. 5, 1976
B 559,954	3,982,673	Feb. 3, 1976	Sep. 28, 1976
B 560,261	3,987,493	Mar. 16, 1976	Oct. 19, 1976
B 560,488	3,989,940	Mar. 16, 1976	Nov. 2, 1976
B 560,717	3,982,034	Feb. 10, 1976	Sep. 21, 1976
B 560,765	3,983,389	Feb. 3, 1976	Sep. 28, 1976
B 561,062	D 242,248	Feb. 10, 1976	Nov. 9, 1976
B 561,165	4,013,002	Mar. 30, 1976	Mar. 22, 1977
B 561,166	4,011,809	Mar. 30, 1976	Mar. 15, 1977
B 561,365	4,005,078	Apr. 13, 1976	Jan. 25, 1977

DOCUMENT NUMBER	PATENT NUMBER	PUB. DATE	ISSUE DATE
B 561,387	3,985,706	Feb. 10, 1976	Oct. 12, 1976
B 561,405	4,003,770	Mar. 30, 1976	Jan. 18, 1977
B 561,712	3,992,126	Feb. 17, 1976	Nov. 16, 1976
B 561,732	3,991,460	Feb. 3, 1976	Nov. 16, 1976
B 561,764	3,984,634	Jan. 27, 1976	Oct. 5, 1976
B 561,770	4,000,366	Mar. 16, 1976	Dec. 28, 1976
B 561,784	3,984,710	Jan. 27, 1976	Oct. 5, 1976
B 562,413	4,000,930	Mar. 16, 1976	Jan. 4, 1977
B 562,462	3,985,836	Jan. 13, 1976	Oct. 12, 1976
B 562,519	4,013,125	Mar. 30, 1976	Mar. 22, 1977
B 562,601	3,998,360	Mar. 16, 1976	Dec. 21, 1976
B 562,698	3,983,972	Jan. 13, 1976	Oct. 5, 1976
B 562,813	3,985,491	Feb. 3, 1976	Oct. 12, 1976
B 563,070	3,996,230	Mar. 9, 1976	Dec. 7, 1976
B 563,165	4,000,977	Mar. 9, 1976	Jan. 4, 1977
B 563,244	3,983,562	Jan. 27, 1976	Sep. 28, 1976
B 563,301	3,995,589	Feb. 17, 1976	Dec. 7, 1976
B 563,412	3,992,127	Feb. 24, 1976	Nov. 16, 1976
B 563,419	3,999,051	Mar. 23, 1976	Dec. 21, 1976
B 563,722	3,990,925	Jan. 13, 1976	Nov. 9, 1976
B 563,780	3,987,769	Feb. 3, 1976	Oct. 26, 1976
B 563,932	4,000,638	Mar. 23, 1976	Jan. 4, 1977
B 564,252	4,001,293	Mar. 2, 1976	Jan. 4, 1977
B 564,255	4,015,996	Mar. 30, 1976	Apr. 5, 1977
B 564,314	3,984,996	Jan. 20, 1976	Oct. 12, 1976
B 564,902	4,001,351	Mar. 23, 1976	Jan. 4, 1977
B 565,180	3,981,685	Jan. 27, 1976	Sep. 21, 1976
B 565,275	3,990,299	Apr. 6, 1976	Nov. 9, 1976
B 565,717	3,999,138	Apr. 13, 1976	Dec. 21, 1976
B 565,754	4,011,626	Mar. 30, 1976	Mar. 15, 1977
B 566,464	3,996,367	Feb. 3, 1976	Dec. 7, 1976
B 566,556	3,998,511	Mar. 23, 1976	Dec. 21, 1976
B 566,572	3,988,590	Mar. 16, 1976	Oct. 26, 1976
B 566,585	4,001,083	Mar. 2, 1976	Jan. 4, 1977
B 567,058	3,985,188	Jan. 13, 1976	Oct. 12, 1976
B 567,076	4,011,187	Mar. 23, 1976	Mar. 8, 1977
B 567,158	3,988,073	Mar. 23, 1976	Oct. 26, 1976
B 567,207	3,991,689	Apr. 13, 1976	Nov. 16, 1976
B 567,435	3,995,724	Feb. 3, 1976	Dec. 7, 1976
B 567,854	3,985,038	Feb. 3, 1976	Oct. 12, 1976
B 567,892	4,000,855	Mar. 16, 1976	Jan. 4, 1977
B 568,226	3,992,698	Feb. 24, 1976	Nov. 16, 1976
B 568,770	3,982,213	Feb. 10, 1976	Sep. 21, 1976
B 569,125	3,986,980	Feb. 24, 1976	Oct. 19, 1976
B 569,293	4,004,149	Mar. 30, 1976	Jan. 18, 1977
B 569,501	3,999,250	Mar. 9, 1976	Dec. 28, 1976
B 569,519	3,993,133	Feb. 3, 1976	Nov. 23, 1976
B 569,646	3,985,222	Jan. 13, 1976	Oct. 12, 1976
B 569,859	3,994,160	Mar. 9, 1976	Nov. 30, 1976
B 570,172	3,987,763	Feb. 3, 1976	Oct. 26, 1976
B 570,615	3,998,570	Mar. 23, 1976	Dec. 21, 1976
B 570,862	3,991,639	Feb. 24, 1976	Nov. 16, 1976
B 570,925	4,040,802	Mar. 23, 1976	Aug. 9, 1977
B 571,219	3,991,388	Feb. 24, 1976	Nov. 9, 1976
B 571,638	4,001,244	Mar. 9, 1976	Jan. 4, 1977
B 571,659	3,995,186	Apr. 13, 1976	Nov. 30, 1976
B 572,642	3,990,715	Feb. 10, 1976	Nov. 9, 1976
B 572,726	4,015,020	Feb. 24, 1976	Mar. 29, 1977
B 573,033	3,995,224	Mar. 23, 1976	Nov. 30, 1976
B 573,114	4,014,843	Apr. 6, 1976	Mar. 29, 1977
B 573,991	4,013,704	Mar. 30, 1976	Mar. 22, 1977
B 573,994	4,000,641	Mar. 23, 1976	Jan. 4, 1977
B 574,128	3,982,961	Feb. 17, 1976	Sep. 28, 1976
B 574,616	4,000,424	Mar. 2, 1976	Dec. 28, 1976
B 574,996	3,989,718	Feb. 17, 1976	Nov. 2, 1976
B 575,583	4,000,928	Mar. 16, 1976	Jan. 4, 1977
B 575,757	3,981,170	Jan. 27, 1976	Sep. 21, 1976
B 575,761	4,013,123	Apr. 13, 1976	Mar. 22, 1977
B 575,776	4,013,124	Apr. 20, 1976	Mar. 22, 1977
B 575,851	3,985,826	Feb. 10, 1976	Oct. 12, 1976
B 576,385	4,009,498	Mar. 30, 1976	Mar. 1, 1977
B 576,859	3,991,526	Feb. 24, 1976	Nov. 16, 1976
B 576,903	3,995,032	Feb. 3, 1976	Nov. 30, 1976
B 578,447	3,982,658	Jan. 20, 1976	Sep. 28, 1976
B 579,104	3,982,081	Jan. 27, 1976	Sep. 21, 1976
B 579,116	3,986,227	Feb. 3, 1976	Oct. 19, 1976
B 579,153	4,013,745	Mar. 30, 1976	Mar. 22, 1977
B 579,806	3,995,318	Feb. 3, 1976	Nov. 30, 1976
B 580,379	4,000,796	Apr. 6, 1976	Jan. 4, 1977
B 580,826	3,988,391	Feb. 17, 1976	Oct. 26, 1976
B 580,921	3,984,054	Jan. 13, 1976	Oct. 5, 1976
B 581,564	4,036,653	Mar. 23, 1976	July 19, 1977
B 581,843	4,000,562	Mar. 16, 1976	Jan. 4, 1977
B 583,051	3,990,714	Feb. 3, 1976	Nov. 9, 1976
B 583,089	3,982,174	Jan. 27, 1976	Sep. 21, 1976
B 583,712	3,995,064	Feb. 10, 1976	Nov. 30, 1976
B 584,520	3,981,149	Jan. 27, 1976	Sep. 21, 1976

CROSS REFERENCE OF PUBLISHED PATENT APPLICATIONS PUBLISHED UNDER SECOND TRIAL VOLUNTARY PROTEST PROGRAM AND NOW ISSUED AS PATENTS—CONTINUED

DOCUMENT NUMBER	PATENT NUMBER	PUB. DATE	ISSUE DATE	DOCUMENT NUMBER	PATENT NUMBER	PUB. DATE	ISSUE DATE
B 584,997	4,000,030	Mar. 9, 1976	Dec. 28, 1976	B 590,502	4,001,171	Mar. 23, 1976	Jan. 4, 1977
B 585,247	3,989,914	Feb. 3, 1976	Nov. 2, 1976	B 591,141	4,013,631	Mar. 23, 1976	Mar. 22, 1977
B 585,731	3,993,603	Feb. 3, 1976	Nov. 23, 1976	B 592,143	3,984,713	Jan. 27, 1976	Oct. 5, 1976
B 586,215	3,985,302	Jan. 20, 1976	Oct. 12, 1976	B 592,146	4,001,084	Mar. 2, 1976	Jan. 4, 1977
B 586,380	3,983,885	Mar. 2, 1976	Oct. 5, 1976	B 592,658	4,001,164	Mar. 23, 1976	Jan. 4, 1977
B 586,387	3,981,311	Feb. 3, 1976	Sep. 21, 1976	B 593,781	4,015,953	Mar. 16, 1976	Apr. 5, 1977
B 586,663	3,992,080	Feb. 3, 1976	Nov. 16, 1976	B 594,871	3,999,245	Mar. 16, 1976	Dec. 28, 1976
B 587,118	Re. 29,067	Mar. 2, 1976	Dec. 7, 1976	B 596,692	3,992,349	Feb. 17, 1976	Nov. 16, 1976
B 587,786	3,991,204	Feb. 17, 1976	Nov. 9, 1976	B 597,410	4,000,925	Mar. 30, 1976	Jan. 4, 1977
B 587,936	3,999,052	Mar. 23, 1976	Dec. 21, 1976	B 657,438	3,985,701	Jan. 20, 1976	Oct. 12, 1976
B 589,179	4,001,102	Mar. 23, 1976	Jan. 4, 1977	B 747,785	3,981,899	Feb. 10, 1976	Sep. 21, 1976
B 589,687	3,995,349	Mar. 23, 1976	Dec. 7, 1976	B 750,679	4,007,049	Mar. 23, 1976	Feb. 8, 1977
B 589,966	3,985,828	Feb. 17, 1976	Oct. 12, 1976	B 843,038	3,981,785	Feb. 3, 1976	Sep. 21, 1976
B 590,158	3,985,163	Feb. 10, 1976	Oct. 12, 1976	B 845,044	4,001,338	Mar. 30, 1976	Jan. 4, 1977
B 590,159	3,985,164	Feb. 3, 1976	Oct. 12, 1976	B 848,336	3,993,752	Mar. 30, 1976	Nov. 23, 1976

LIST OF DEFENSIVE PUBLICATIONS

APPLICANTS TO WHOM

DEFENSIVE PUBLICATIONS WERE ISSUED ON THE 6TH DAY OF DECEMBER, 1977

Published at the request of the applicant or owner in accordance with the Notice of Dec. 16, 1969, 869 O. G. 687.

Carbone, John N.; Dominguez, George S.; and Isharani, Jayanti V. Dyestuff waste water purification. T965,001, 12-6-77, Cl. 210-52.000.
Caunt, Anthony David. Treatment of transition metal compound as component for olefin polymerization catalyst. T965,004, 12-6-77, Cl. 526-128.000.
Crane, Grant; and Kay, Edward L., to Firestone Tire & Rubber Company, The. Steam treatment of vulcanized-scrap-rubber pyrolysis char. T965,002, 12-6-77, Cl. 252-421.000.
Dominguez, George S.: *See—*
Carbone, John N.; Dominguez, George S.; and Isharani, Jayanti V., T965,001, Cl. 210-52.000.
Elwood, James K.: *See—*
Leone, Ronald E.; and Elwood, James K., T965,005, Cl. 542-429.000.
Firestone Tire & Rubber Company, The: *See—*
Crane, Grant; and Kay, Edward L., T965,002, Cl. 252-421.000.
Isharani, Jayanti V.: *See—*
Carbone, John N.; Dominguez, George S.; and Isharani, Jayanti V., T965,001, Cl. 210-52.000.
Kay, Edward L.: *See—*
Crane, Grant; and Kay, Edward L., T965,002, Cl. 252-421.000.
Leone, Ronald E.; and Elwood, James K. Nucleating agents, radiation-sensitive compositions and photographic elements. T965,005, 12-6-77, Cl. 542-429.000.
Schellekens, Joannes C. A.; and Van Beem, Eric J., to Shell Oil Company. Process for coating a pipe. T965,003, 12-6-77, Cl. 427-409.000.
Shell Oil Company: *See—*
Schellekens, Joannes C. A.; and Van Beem, Eric J., T965,003, Cl. 427-409.000.
Van Beem, Eric J.: *See—*
Schellekens, Joannes C. A.; and Van Beem, Eric J., T965,003, Cl. 427-409.000.

LIST OF REISSUE PATENTEES

TO WHOM

PATENTS WERE ISSUED ON THE 6TH DAY OF DECEMBER, 1977

NOTE.—Arranged in accordance with the first significant character or word of the name (in accordance with city and telephone directory practice).

Cabot Corporation: *See—*
Gardner, Ross, Jr., Re. 29,487, Cl. 128-152.000.
Clinton Watch Company: *See—*
Wein, Irving L., Re. 29,486, Cl. 58-91.000.
Ethyl Corporation: *See—*
Gautreaux, Marcelian F., Re. 29,488, Cl. 44-68.000.
Gardner, Ross, Jr., to Cabot Corporation. Earplugs. Re. 29,487, Cl. 128-152.000.
Gautreaux, Marcelian F., to Ethyl Corporation. Fuel compositions and additive mixtures for alleviation of exhaust gas catalyst plugging. Re. 29,488, Cl. 44-68.000.
Imperial Chemical Industries Limited: *See—*
Newton, Alan Branford; Rose, John Brewster; and Leslie, Victor Jeffrey, Re. 29,489, Cl. 260-607.0AR.
Leslie, Victor Jeffrey: *See—*
Newton, Alan Branford; Rose, John Brewster; and Leslie, Victor Jeffrey, Re. 29,489, Cl. 260-607.0AR.
Newton, Alan Branford; Rose, John Brewster; and Leslie, Victor Jeffrey, to Imperial Chemical Industries Limited. Biphenyl sulphones. Re. 29,489, Cl. 260-607.0AR.
Rose, John Brewster: *See—*
Newton, Alan Branford; Rose, John Brewster; and Leslie, Victor Jeffrey, Re. 29,489, Cl. 260-607.0AR.
Shamma, Ramzi A. System for electronic modification of sound. Re. 29,490, Cl. 179-1.0VL.
Wein, Irving L., to Clinton Watch Company. Timepiece. Re. 29,486, Cl. 58-91.000.

LIST OF PLANT PATENTEES

Grunwald, Walter, to Pan-American Plant Company. Chrysanthemum named Bronze Dolly. 4,162, 12-6-77, Cl. 79.000.
Pan-American Plant Company: *See—*
Grunwald, Walter, 4,162, Cl. 79.000.
Thoro, Andrew. Orange tree. 4,161, 12-6-77, Cl. 45.000.

LIST OF DESIGN PATENTEES

Ball Corporation: *See—*
Stahel, Alvin J., 246,561, Cl. D7-76.000.
Ballenger, William. High chair. 246,553, 12-6-77, Cl. D6-8.000.
Barr, Josef J. Diamond ring. 246,579, 12-6-77, Cl. D11-34.000.
Bateman, Robert F.: *See—*
Beauchamp, Roger P.; and Bateman, Robert F., 246,560, Cl. D7-76.000.
Baughman, Daniel G. Belt buckle or similar article. 246,552, 12-6-77, Cl. D2-406.000.
Beauchamp, Roger P.; and Bateman, Robert F. Closured and divided storage box or the like. 246,560, 12-6-77, Cl. D7-76.000.

Bell Telephone Laboratories, Incorporated: *See—*
Bhat, Ghanshyam Ambaram; Genaro, Donald Michael; Sylvester, Gordon Elliot; Watkinson, Edwin; and Wesner, John William, Jr., 246,584, Cl. D14-57.000.

Bhat, Ghanshyam Ambaram; Genaro, Donald Michael; Sylvester, Gordon Elliot; Watkinson, Edwin; and Wesner, John William, Jr., to Bell Telephone Laboratories, Incorporated. Telephone stand. 246,584, 12-6-77, Cl. D14-57.000.

Bonny Products, Inc.: *See—*
Steiner, Fred S.; and Cousins, Morison S., 246,559, Cl. D7-47.000.

Brandt, Michael W. Blade holder tool for cutting a pour spout. 246,568, 12-6-77, Cl. D8-40.000.

Bricker, Melvin D. Multi-purpose tool. 246,567, 12-6-77, Cl. D8-26.000.

Buckingham Graphics, Inc.: *See—*
Ferrarell, Michael J., 246,588, Cl. D16-33.000.

Cameron, Russell J.: *See—*
Fialkowski, Daniel H.; and Cameron, Russell J., 246,596, Cl. D23-19.000.

Caterpillar Tractor Co.: *See—*
Downing, Benjamin A., 246,615, Cl. D87-1.00R.

Christiansen, Walter N., to Gardner-Denver Company. Hand-held tool for removing insulation from electrical conductors. 246,570, 12-6-77, Cl. D8-98.000.

Cognata, Larry M. Belt guard fcr a roto-tiller. 246,586, 12-6-77, Cl. D15-12.000.

Cousins, Michael A.: *See—*
Cousins, Morison S.; and Cousins, Michael A., 246,605, Cl. D28-13.000.
Cousins, Morison S.; Cousins, Michael A.; and Rhodes, Greydon A., III, 246,606, Cl. D28-18.000.

Cousins, Morison S.; and Cousins, Michael A., to Gillette Company, The. Portable hair dryer. 246,605, 12-6-77, Cl. D28-13.000.

Cousins, Morison S.; Cousins, Michael A.; and Rhodes, Greydon A., III, to Gillette Company, The. Styler handle. 246,606, 12-6-77, Cl. D28-18.000.

Cousins, Morison S.: *See—*
Steiner, Fred S.; and Cousins, Morison S., 246,559, Cl. D7-47.000.

Dallaire, Raymond. Window component extrusion. 246,601, 12-6-77, Cl. D25-74.000.

Dansk International Designs Ltd.: *See—*
Hube, Vivanna Torun Bulow, 246,563, Cl. D7-150.000.

DeLuca, Paul V. Telephone connector block guide. 246,581, 12-6-77, Cl. D13-13.000.

Doerner, Frank. Chair control. 246,558, 12-6-77, Cl. D6-191.000.

Downing, Benjamin A., to Caterpillar Tractor Co. Combined storage and shipping container. 246,615, 12-6-77, Cl. D87-1.00R.

Epoch Company, Ltd.: *See—*
Matsumoto, Teruo, 246,610, Cl. D34-5.0SS.

Ferrarell, Michael J., to Buckingham Graphics, Inc. Film dryer. 246,588, 12-6-77, Cl. D16-33.000.

Fialkowski, Daniel H.; and Cameron, Russell J., to Ross Operating Valve Company. Cover for solenoid operated pilot valve. 246,596, 12-6-77, Cl. D23-19.000.

Fisher, Morris F., to Futorian Corporation. Chair. 246,554, 12-6-77, Cl. D6-71.000.

Frost, Charles W. Cigarette holder. 246,602, 12-6-77, Cl. D27-2.000.

Frost, Charles W. Smoking pipe. 246,603, 12-6-77, Cl. D27-3.000.

Frost, Charles W. Smoking pipe. 246,604, 12-6-77, Cl. D27-3.000.

Futorian Corporation: *See—*
Fisher, Morris F., 246,554, Cl. D6-71.000.

Gardner-Denver Company: *See—*
Christiansen, Walter N., 246,570, Cl. D8-98.000.

Genaro, Donald Michael: *See—*
Bhat, Ghanshyam Ambaram; Genaro, Donald Michael; Sylvester, Gordon Elliot; Watkinson, Edwin; and Wesner, John William, Jr., 246,584, Cl. D14-57.000.

General Electric Company: *See—*
Grieb, Joan, 246,571, Cl. D8-350.000.
Okada, Tomoji, 246,582, Cl. D14-6.000.
Okada, Tomoji, 246,583, Cl. D14-6.000.

Gillette Company, The: *See—*
Cousins, Morison S.; and Cousins, Michael A., 246,605, Cl. D28-13.000.
Cousins, Morison S.; Cousins, Michael A.; and Rhodes, Greydon A., III, 246,606, Cl. D28-18.000.

Gilmartin, Michael D.; and Ginella, James A. Holder for seed packets or the like. 246,557, 12-6-77, Cl. D6-130.000.

Ginella, James A.: *See—*
Gilmartin, Michael D.; and Ginella, James A., 246,557, Cl. D6-130.000.

Gordon, David L.: *See—*
Johnson, Ray W., 246,614, Cl. D34-15.0BB.

Grieb, Joan, to General Electric Company. Wall plate. 246,571, 12-6-77, Cl. D8-350.000.

Hansjosten, Nikolaus; and Langwara, Christoph, to Industriewerke Lemm & Co. GmbH. Shoe sole. 246,551, 12-6-77, Cl. D2-320.000.

Haufe, David K., to Sunbeam Corporation. Blender base. 246,564, 12-6-77, Cl. D7-154.000.

Hefendehl, Hans Friedrich: *See—*
Zeischegg, Walter, 246,592, Cl. D19-75.000.

Holtje, Wilfried; and Prochnow, Claus, to Rollei-Werke Franke & Heidecke. Electronic flash unit. 246,589, 12-6-77, Cl. D16-42.000.

Hosick, Frank A., to K-2 Corporation. Ski pole grip or similar article. 246,612, 12-6-77, Cl. D34-14.00D.

Hube, Vivanna Torun Bulow, to Dansk International Designs Ltd. Knife or a similar article. 246,563, 12-6-77, Cl. D7-150.000.

Inaba, Kanji, to Kabushiki Kaisha Daini Seikosha. Watch case. 246,576, 12-6-77, Cl. D10-30.000.

Inaba, Kanji, to Kabushiki Kaisha Daini Seikosha, JA. Watch case. 246,577, 12-6-77, Cl. D10-30.000.

Industriewerke Lemm & Co. GmbH: *See—*
Hansjosten, Nikolaus; and Langwara, Christoph, 246,551, Cl. D2-320.000.

Ishida, Satoshi: *See—*
Onodera, Tsuyoshi; and Ishida, Satoshi, 246,575, Cl. D10-30.000.

Japan Medical Supply Co., Ltd.: *See—*
Kurata, Motoji, 246,600, Cl. D24-56.000.

Johnson, Ray W., to Gordon, David L., a part interest. Simulative toy top. 246,614, 12-6-77, Cl. D34-15.0BB.

K-2 Corporation: *See—*
Hosick, Frank A., 246,612, Cl. D34-14.00D.

Kabushiki Kaisha Daini Seikosha: *See—*
Inaba, Kanji, 246,576, Cl. D10-30.000.
Inaba, Kanji, 246,577, Cl. D10-30.000.
Onodera, Tsuyoshi; and Ishida, Satoshi, 246,575, Cl. D10-30.000.

Kanno, Hideyuki, to Tomy Kogyo Co., Inc. Game board. 246,609, 12-6-77, Cl. D34-5.0SS.

Kurata, Motoji, to Japan Medical Supply Co., Ltd. Test tube. 246,600, 12-6-77, Cl. D24-56.000.

Langwara, Christoph: *See—*
Hansjosten, Nikolaus; and Langwara, Christoph, 246,551, Cl. D2-320.000.

Laylon, Harry. Side chair. 246,555, 12-6-77, Cl. D6-75.000.

Loma Corporation: *See—*
Van Skiver, Ralph, 246,566, Cl. D7-194.000.

M & M Luggage Co., Inc.: *See—*
Sollazzi, Pasquale R., 246,590, Cl. D19-13.000.
Sollazzi, Pasquale R., 246,591, Cl. D19-13.000.

Matsumoto, Teruo, to Epoch Company, Ltd. Electrical circuit game board. 246,610, 12-6-77, Cl. D34-5.0SS.

Max, Lester S.: *See—*
Miller, Samuel A., 246,587, Cl. D15-56.000.

Meierhoefer, Eugene J., to Warner-Lambert Company. Bottle or similar article. 246,574, 12-6-77, Cl. D9-67.000.

Miller, C. March: *See—*
Noyes, Henry C., Jr.; and Miller, C. March, 246,611, Cl. D34-5.0PP.

Miller, Samuel A., to Newman, Ruth Max; and Max, Lester S. Head for a surface-treating machine. 246,587, 12-6-77, Cl. D15-56.000.

Morrison, Paul Merlin. Mercury removing device for dental amalgamators. 246,598, 12-6-77, Cl. D24-1.100.

Nagasaka, Yoshizo, to Tomy Kogyo Co., Inc. Doll. 246,608, 12-6-77, Cl. D34-4.00R.

Newman, Ruth Max: *See—*
Miller, Samuel A., 246,587, Cl. D15-56.000.

Noyes, Henry C., Jr.; and Miller, C. March. Game target. 246,611, 12-6-77, Cl. D34-5.0PP.

Ogawa, Iwakichi, to Takara Co., Ltd. Toy racing car. 246,613, 12-6-77, Cl. D34-15.0AJ.

Okada, Tomoji, to General Electric Company. Cassette tape recorder. 246,582, 12-6-77, Cl. D14-6.000.

Okada, Tomoji, to General Electric Company. Cassette tape recorder. 246,583, 12-6-77, Cl. D14-6.000.

Onodera, Tsuyoshi; and Ishida, Satoshi, to Kabushiki Kaisha Daini Seikosha. Watch case. 246,575, 12-6-77, Cl. D10-30.000.

Paquette, Edmund T., to Wright Line Inc. Desk top hanger for suspension-type document holders. 246,593, 12-6-77, Cl. D19-90.000.

Parduhn, Alfred P. Antenna mounting bracket. 246,585, 12-6-77, Cl. 14-91.000.

Parsons, Randolph C. Bed. 246,556, 12-6-77, Cl. D6-79.000.

Penniman, Allen D., Jr.: *See—*
Ward, Michael V.; Penniman, Allen D., Jr.; and Pikul, Richard E., 246,599, Cl. D24-17.000.

Pikul, Richard E.: *See—*
Ward, Michael V.; Penniman, Allen D., Jr.; and Pikul, Richard E., 246,599, Cl. D24-17.000.

Prochnow, Claus: *See—*
Holtje, Wilfried; and Prochnow, Claus, 246,589, Cl. D16-42.000.

Puritan-Bennett Corporation: *See—*
Ward, Michael V.; Penniman, Allen D., Jr.; and Pikul, Richard E., 246,599, Cl. D24-17.000.

Radisich, Michael R. Pendant or the like. 246,607, 12-6-77, Cl. D31-21.300.

Rasmussen, Richard A. Trophy base. 246,580, 12-6-77, Cl. D11-157.000.

Rhodes, Greydon A., III: *See—*
Cousins, Morison S.; Cousins, Michael A.; and Rhodes, Greydon A., III, 246,606, Cl. D28-18.000.

Rice, Richard E., to University of California, The Regents of the. Insect trap. 246,594, 12-6-77, Cl. D22-19.000.

Ridgeway, Louis H. Bathtub. 246,597, 12-6-77, Cl. D23-55.000.

Roark, Harry B. Support stand for flexible bags. 246,565, 12-6-77, Cl. D7-189.000.

Rollei-Werke Franke & Heidecke: *See—*
Holtje, Wilfried; and Prochnow, Claus, 246,589, Cl. D16-42.000.

Ross Operating Valve Company: *See—*
Fialkowski, Daniel H.; and Cameron, Russell J., 246,596, Cl. D23-19.000.

Sollazzi, Pasquale R., to M & M Luggage Co., Inc. Combined luggage handle loop and concealed identification tag or similar article. 246,590, 12-6-77, Cl. D19-13.000.

Sollazzi, Pasquale R., to M & M Luggage Co., Inc. Combined luggage flap and concealed identification tag or similar article. 246,591, 12-6-77, Cl. D19-13.000.

Stahel, Alvin J., to Ball Corporation. Covered storage container. 246,561, 12-6-77, Cl. D7-76.000.

Steiner, Fred S.; and Cousins, Morison S., to Bonny Products, Inc. Stackable colander. 246,559, 12-6-77, Cl. D7-47.000.

Stoddard, Ione M. Combined ice chest and wine cooler. 246,562, 12-6-77, Cl. D7-78.000.

Sunbeam Corporation: *See—*
Haufe, David K., 246,564, Cl. D7-154.000.

Sylvester, Gordon Elliot: *See—*
Bhat, Ghanshyam Ambaram; Genaro, Donald Michael; Sylvester, Gordon Elliot; Watkinson, Edwin; and Wesner, John William, Jr., 246,584, Cl. D14-57.000.

Takara Co., Ltd.: *See—*
Ogawa, Iwakichi, 246,613, Cl. D34-15.0AJ.

Tomy Kogyo Co., Inc.: *See—*
Kanno, Hideyuki, 246,609, Cl. D34-5.0SS.
Nagasaka, Yoshizo, 246,608, Cl. D34-4.00R.

University of California, The Regents of the: *See—*
Rice, Richard E., 246,594, Cl. D22-19.000.

Van Skiver, Ralph, to Loma Corporation. Lid for refuse container. 246,566, 12-6-77, Cl. D7-194.000.

Walter, Le Roy A. Stand for holding a vehicle air conditioner compressor at different angles during repair. 246,572, 12-6-77, Cl. D8-354.000.

Ward, Michael V.; Penniman, Allen D., Jr.; and Pikul, Richard E., to Puritan-Bennett Corporation. Pulmonary diagnostic instrument unit. 246,599, 12-6-77, Cl. D24-17.000.

Warner-Lambert Company: *See—*
Meierhoefer, Eugene J., 246,574, Cl. D9-67.000.

Watkinson, Edwin: *See—*
Bhat, Ghanshyam Ambaram; Genaro, Donald Michael; Sylvester, Gordon Elliot; Watkinson, Edwin; and Wesner, John William, Jr., 246,584, Cl. D14-57.000.

Wesner, John William, Jr.: *See—*
Bhat, Ghanshyam Ambaram; Genaro, Donald Michael; Sylvester, Gordon Elliot; Watkinson, Edwin; and Wesner, John William, Jr., 246,584, Cl. D14-57.000.

Wesson, Albert G. Cement finishing tool. 246,569, 12-6-77, Cl. D8-45.000.

White, Donald A. Fire alarm. 246,578, 12-6-77, Cl. D10-106.000.

White, Donald E. Base bracket for supporting a brick veneer wall from a house foundation wall. 246,573, 12-6-77, Cl. D8-384.000.

Williams, William O., Jr. Artificial fishing lure. 246,595, 12-6-77, Cl. D22-27.000.

Wright Line Inc.: *See—*
Paquette, Edmund T., 246,593, Cl. D19-90.000.

Zeischegg, Walter, to Hefendehl, Hans Friedrich. Desk set. 246,592, 12-6-77, Cl. D19-75.000.

CLASSIFICATION OF PATENTS

ISSUED DECEMBER 6, 1977

NOTE.—First number, class; second number, subclass; third number, patent number

CLASS 2
84 4,060,852
108 4,060,853
338 4,060,854
413 4,060,855

CLASS 3
1.3 4,060,856

CLASS 4
26 4,060,857
57 R 4,060,858
102 4,060,859
172.14 4,060,860
253 4,060,861

CLASS 5
260 4,060,862
337 4,060,863

CLASS 8
79 4,061,464
185 4,061,465

CLASS 9
6 M 4,060,864
4,060,865
310 D 4,060,866
313 4,060,867

CLASS 10
72 R 4,060,868

CLASS 12
115.2 4,060,869

CLASS 13
24 4,061,870
31 4,061,871

CLASS 15
24 4,060,870
29 4,060,871
250.04 4,060,872
256.5 4,060,873
405 4,060,874

CLASS 17
1 F 4,060,875

CLASS 23
230 B 4,061,466
232 R 4,061,467
253 R 4,061,469
253 TP 4,061,468
258.5 M 4,061,470
260 4,061,471

CLASS 24
3 J 4,060,876
33 B 4,060,877
230 A 4,060,878
4,060,879

CLASS 29
132 4,060,882
156.8 R 4,060,883
256 4,060,884
407 4,060,885
410 4,060,886
626 4,060,887
628 4,060,888
4,060,889
4,060,890

CLASS 30
90.1 4,060,891
253 4,060,892
310 4,060,893
382 4,060,894
384 4,060,895

CLASS 32
10 A 4,060,896
11 4,060,899
40 R 4,060,897
4,060,898

CLASS 33
75 R 4,060,900
108 4,060,901
114 4,060,902
125 R 4,060,903
172 R 4,060,904
180 R 4,060,905
181 R 4,060,906
184.5 4,060,907
275 R 4,060,908
296 4,060,909
324 4,060,910

CLASS 34
5 4,060,911
9 4,060,912
80 4,060,913
219 4,060,914

CLASS 35
9 A 4,060,915
10 4,060,916

CLASS 36
59 C 4,060,917
97 4,060,918

CLASS 40
104 A 4,060,919
140 4,060,920
301 4,060,921
302 4,060,922

CLASS 43
4 4,060,923
24 4,060,924
41.2 4,060,925
42.44 4,060,926
43.1 4,060,927
43.16 4,060,928

CLASS 44
1 R 4,061,472
51 4,061,473
66 4,061,474
68 Re.29,488

CLASS 46
11 4,060,929
81 4,060,930
112 4,060,931
116 4,060,932

CLASS 47
58 4,060,933
79 4,060,934

CLASS 48
197 R 4,061,475

CLASS 49
25 4,060,935
465 4,060,936

CLASS 51
80 A 4,060,937
110 4,060,938
157 4,060,939
170 PT 4,060,940
211 H 4,060,941
268 4,060,942
281 R 4,060,943

CLASS 52
43 4,060,944
169.5 4,060,945
169.7 4,060,946
179 4,060,947
236.8 4,060,948
285 4,060,949
456 4,060,950
508 4,060,951
593 4,060,952
677 4,060,954
743 4,060,953
749 4,060,955

CLASS 53
22 R 4,060,956
26 4,060,957
37 4,060,958
373 4,060,959

CLASS 55
77 4,061,476
79 4,061,477
257 C 4,061,479
257 PV 4,061,478
356 4,061,480

CLASS 56
14.6 4,060,960
294 4,060,961
336 4,060,962

CLASS 57
1 R 4,060,963
34 HS 4,060,964
34 R 4,060,965
58.89 4,060,966
77.45 4,060,967
102 4,060,969
140 BY 4,060,968
140 R 4,060,970

CLASS 58
4 A 4,060,971
16 D 4,060,972
19 R 4,060,973
23 R 4,060,974
50 R 4,060,975
58 4,060,976
85.5 4,060,977
91 Re.29,486

CLASS 59
78 4,060,978

CLASS 60
39.03 4,060,979
4,060,980
226 R 4,060,981
282 4,060,982
4,060,983
290 4,060,984
319 4,060,985
388 4,060,986
409 4,060,987
641 4,060,988
650 4,060,989
676 4,060,990

CLASS 61
13 4,060,991
41 A 4,060,992
43 4,060,993
53.6 4,060,994
92 4,060,995

CLASS 62
6 4,060,996
29 4,061,481
155 4,061,482
180 4,060,997
268 4,061,483
320 4,060,998

CLASS 65
2 4,061,484
4 R 4,061,485
18 4,061,486
135 4,061,487

CLASS 66
125 A 4,060,999

CLASS 68
23.7 4,061,000
200 4,061,001
212 4,061,002

CLASS 70
352 4,061,003
363 4,061,004

CLASS 71
68 4,061,490
77 4,061,488
88 4,061,489
92 4,061,491

CLASS 72
30 4,061,005
34 4,061,006
56 4,061,007
69 4,061,009
98 4,061,008
201 4,061,010
262 4,061,011
347 4,061,012
354 4,061,013

CLASS 73
45.1 4,061,014
49.5 4,061,015
60.1 4,061,016
81 4,061,020
84 4,061,021
95 4,061,022
114 4,061,023
4,061,024
116 4,061,025
4,061,026
119 A 4,061,027
179 4,061,028
180 4,061,029
194 E 4,061,030
200 4,061,031
273 4,061,032
339 R 4,061,033
398 AR 4,061,034
406 4,061,035
421.5 A 4,061,036
425.6 4,061,037
427 4,061,038
489 4,061,039
505 4,061,040
579 4,061,017
629 4,061,018
646 4,061,041
647 4,061,042
662 4,061,019

CLASS 74
5.6 D 4,061,043
31 4,061,044
198 4,061,045
217 B 4,061,046
230.17 C 4,061,047
242 4,061,048
424.8 R 4,061,049
469 4,061,050
474 4,061,051
498 4,061,052
512 4,061,053
552 4,061,054
866 4,061,055

CLASS 75
10 C 4,061,493
10 R 4,061,492
124 4,061,494
134 F 4,061,495

CLASS 76
104 R 4,061,056
112 4,061,057

CLASS 81
90 C 4,061,058

CLASS 82
1 C 4,061,059
2.5 4,061,061
2.7 4,061,062
3 4,061,060

CLASS 83
55 4,061,063
368 4,061,064
404.4 4,061,070
562 4,061,065
808 4,061,066

CLASS 84
236 4,061,067
275 4,061,068
315 4,061,069
455 4,061,071
478 4,061,072

CLASS 85
62 4,061,073

CLASS 89
33 CA 4,061,074
132 4,061,075

CLASS 90
11 A 4,061,076
15 A 4,061,077
24 C 4,061,078

CLASS 91
372 4,061,079

CLASS 92
13.2 4,061,080

CLASS 93
53 SD 4,061,081

CLASS 96
29 D 4,061,496
77 4,061,497
100 R 4,061,498
111 4,061,499

CLASS 98
40 D 4,061,082

CLASS 99
345 4,061,083

CLASS 100
1 4,061,084

CLASS 101
150 4,061,085
240 4,061,086
415.1 4,061,087

CLASS 102
28 R 4,061,088

CLASS 104
23 FS 4,061,089

CLASS 106
15 R 4,061,500
44 4,061,501
72 4,061,502
300 4,061,503

CLASS 108
51.1 4,061,090
84 4,061,091
149 4,061,092

CLASS 109
19 4,061,093

CLASS 111
89 4,061,094

CLASS 112
79 R 4,061,095
121.14 4,061,096
121.15 4,061,097

CLASS 113
116 Q 4,061,098

CLASS 114
39 4,061,099
43 4,061,100
106 4,061,101
122 4,061,102
252 4,061,103
281 4,061,104

CLASS 115
3 4,061,105
24.1 4,061,106

CLASS 116
67 R 4,061,107

CLASS 118
100 4,061,108
118 4,061,109

CLASS 119
4 4,061,110
159 4,061,111

CLASS 122
7 R 4,061,112

CLASS 123
26 4,061,113
32 SJ 4,061,114
90.16 4,061,115
117 D 4,061,116
119 A 4,061,119
119 EC 4,061,117
119 LR 4,061,118
143 A 4,061,120
149 R 4,061,121
169 R 4,061,122
198 F 4,061,123

CLASS 124
23 R 4,061,124
24 R 4,061,125

CLASS 125
21 4,061,126

CLASS 126
120 4,061,127
210 4,061,128
270 4,061,129
271 4,061,130
4,061,131
4,061,132
350 R 4,061,133

CLASS 128
1 R 4,061,134
6 4,061,135
24.1 4,061,136
33 4,061,137
82 4,061,138
145 A 4,061,140
152 Re.29,487
214 R 4,061,141
4,061,142
218 N 4,061,143
227 4,061,144
275 4,061,145
305 4,061,146

CLASS 131
4 A 4,061,147
23 R 4,061,148
231 4,061,149

CLASS 132
7 4,061,150

CLASS 134
33 4,061,151
73 4,061,152
95 4,061,504
138 4,061,153

CLASS 135
34 4,061,154

CLASS 136
238 4,061,505

CLASS 137
85 4,061,155
109 4,061,156
242 4,061,157
552.5 4,061,158
596 4,061,159
637.2 4,061,160

CLASS 138
30 4,061,161
147 4,061,162

CLASS 141
7 4,061,163
90 4,061,164

CLASS 144
1 R 4,061,165
2 Z 4,061,166
34 E 4,061,167
193 R 4,061,168
213 4,061,169

CLASS 148
1.5 4,061,506
12 R 4,061,507
31.55 4,061,509
128 4,061,508
187 4,061,510

CLASS 149
19.9 4,061,511
22 4,061,512

CLASS 150
52 R 4,061,170

CLASS 152
352 R 4,061,171
379.1 4,061,172

CLASS 156
63 4,061,514
73.6 4,061,515
94 4,061,516
212 4,061,517
232 4,061,518

244 4,061,519
245 4,061,520
265 4,061,521
305 4,061,522
380 4,061,523
392 4,061,513
397 4,061,524
460 4,061,525
468 4,061,526
519 4,061,527
561 4,061,528
644 4,061,529
653 4,061,530

CLASS 157

1.17 4,061,173

CLASS 159

48 L 4,061,531

CLASS 162

19 4,061,193
352 4,061,532

CLASS 164

6 4,061,174
45 4,061,175
61 4,061,176
87 4,061,177
4,061,178
151 4,061,179
252 4,061,180
292 4,061,181
309 4,061,182

CLASS 165

8 4,061,183
38 4,061,184
48 4,061,185
59 4,061,186
107 4,061,187
122 4,061,188
168 4,061,189

CLASS 166

259 4,061,190
292 4,061,191

CLASS 169

16 4,061,192

CLASS 172

447 4,061,194
456 4,061,195

CLASS 173

49 4,061,196

CLASS 174

138 F 4,061,872
208 4,061,873

CLASS 175

101 4,061,197

CLASS 176

20 R 4,061,533
37 4,061,534
38 4,061,535
78 4,061,536

CLASS 177

50 4,061,198

CLASS 179

1 AT 4,061,876
1 E 4,061,877
1 P 4,061,874
4,061,875
1 SC 4,061,878
1 VL Re.29,490
15 BA 4,061,879
4,061,880
15 BF 4,061,881
15 BT 4,061,882
16 F 4,061,883
18 GF 4,061,884
84 VF 4,061,885
4,061,886
99 4,061,887
100 D 4,061,888
100.3 T 4,061,889
115.5 VC 4,061,890
175.1 A 4,061,891
175.3 R 4,061,892

CLASS 180

8 A 4,061,199
66 B 4,061,200
133 4,061,201

CLASS 182

20 4,061,202
214 4,061,203

CLASS 184

6.3 4,061,204

CLASS 186

1 A 4,061,205

CLASS 188

26 4,061,206
71.9 4,061,208
73.3 4,061,209
79.5 P 4,061,210
4,061,211
181 A 4,061,212
181 R 4,061,213
206 A 4,061,429
264 E 4,061,207
277 4,061,214

CLASS 192

4 A 4,061,215
46 4,061,216
58 B 4,061,218
052 4,061,217

CLASS 195

1.7 4,061,537
29 4,061,538
31 F 4,061,539
62 4,061,540
66 R 4,061,541
80 R 4,061,542
103.5 K 4,061,543

CLASS 197

164 4,061,219
181 4,061,220

CLASS 198

524 4,061,221
807 4,061,222
821 4,061,223

CLASS 200

38 D 4,061,893
144 B 4,061,894
157 4,061,895
323 4,061,896

CLASS 202

141 4,061,544

CLASS 203

9 4,061,545
31 4,061,546

CLASS 204

54 R 4,061,547
78 4,061,548
98 4,061,549
4,061,550
105 R 4,061,551
106 4,061,559
107 4,061,552
114 4,061,553
129 4,061,554
242 4,061,555
271 4,061,556
277 4,061,557
290 F 4,061,558
299 R 4,061,560
4,061,561

CLASS 206

1.7 4,061,224
230 4,061,225
306 4,061,226
454 4,061,227
4,061,228
486 4,061,229

CLASS 208

61 4,061,562
111 4,061,563

CLASS 210

21 4,061,564
32 4,061,565
4,061,566
40 4,061,567
44 4,061,568
83 4,061,569
96 M 4,061,570
130 4,061,571
168 4,061,572
282 4,061,573
321 R 4,061,574
350 4,061,575
437 4,061,576

CLASS 212

70 4,061,230

CLASS 214

1 BB 4,061,232
1 P 4,061,231
2.5 4,061,233
6 M 4,061,234
64 4,061,235
309 4,061,236
515 4,061,237

750 4,061,238

CLASS 215

221 4,061,239
270 4,061,240

CLASS 219

131 R 4,061,899
211 4,061,897
4,061,898

CLASS 220

4 B 4,061,241
90 4,061,242
269 4,061,243
310 4,061,244

CLASS 221

75 4,061,245

CLASS 222

1 4,061,246
4,061,247
4 4,061,248
78 4,061,249
321 4,061,250
402.18 4,061,252
402.2 4,061,251
442 4,061,253
494 4,061,254
566 4,061,255

CLASS 224

5 D 4,061,256
42.08 4,061,257
42.42 R 4,061,258
51 4,061,259

CLASS 226

139 4,061,260

CLASS 228

2.5 4,061,261
50 4,061,262
107 4,061,139
124 4,061,263
145 4,061,264

CLASS 235

92 EV 4,061,901
197 4,061,909
302.3 4,061,908
437 4,061,900

CLASS 236

48 R 4,061,265
49 4,061,266

CLASS 237

1 A 4,061,267

CLASS 238

14 4,061,268
17 4,061,269
107 4,061,270

CLASS 239

1 4,061,271
145 4,061,272
172 4,061,273

CLASS 241

24 4,061,274
46.04 4,061,275
69 4,061,276
73 4,061,277
74 4,061,278
86.1 4,061,279
101.6 4,061,280
188 R 4,061,281
222 4,061,282
261.3 4,061,283
294 4,061,284

CLASS 242

7.13 4,061,289
18 R 4,061,285
56 R 4,061,286
67.1 R 4,061,287
84.1 K 4,061,288
96 4,061,290
107 4,061,291
201 4,061,292

CLASS 244

26 4,061,293
103 S 4,061,294
104 FP 4,061,295
112 4,061,296
184 4,061,297

CLASS 248

23 4,061,298
73 4,061,299
125 4,061,300
156 4,061,301
170 4,061,302
204 4,061,303
404 4,061,304

432 4,061,305
523 4,061,306

CLASS 250

199 4,061,577
201 4,061,914
315 A 4,061,915
330 4,061,578
332 4,061,916
338 4,061,917
343 4,061,918
363 S 4,061,919
413 4,061,920
423 P 4,061,921
461 R 4,061,922
468 4,061,923
476 4,061,924
553 4,061,925

CLASS 251

315 4,061,307

CLASS 252

8.1 4,061,579
8.55 R 4,061,580
32.7 E 4,061,581
62.1 L 4,061,582
62.3 BT 4,061,583
63 4,061,584
89 R 4,061,585
153 4,061,586
299 4,061,587
389 A 4,061,589
426 4,061,590
429 R 4,061,588
430 4,061,591
439 4,061,592
443 4,061,593
462 4,061,594
463 4,061,595
4,061,596
465 4,061,597
466 PT 4,061,598
501 4,061,599
510 4,061,600
511 4,061,601
547 4,061,602
548 4,061,603

CLASS 254

10.5 4,061,308
86 H 4,061,309
93 HP 4,061,310
168 4,061,311

CLASS 256

10 4,061,312

CLASS 260

2.5 AJ 4,061,604
4,061,605
2.5 R 4,061,606
8 4,061,607
4,061,608
9 4,061,609
17.4 ST 4,061,610
4,061,611
29.2 N 4,061,619
29.2 TN 4,061,618
29.3 4,061,620
31.4 R 4,061,612
40 R 4,061,613
4,061,614
45.7 P 4,061,615
45.8 N 4,061,616
47 R 4,061,617
78 L 4,061,621
78 R 4,061,622
78 TF 4,061,623
79.3 M 4,061,624
112.5 R 4,061,625
112.5 S 4,061,626
178 4,061,627
239.1 4,061,628
4,061,629
250 P 4,061,636
268 PH 4,061,637
270 P 4,061,638
283 S 4,061,639
287 CE 4,061,640
293.61 4,061,641
295 R 4,061,643
295.5 A 4,061,642
296 R 4,061,644
302 SD 4,061,645
306 4,061,646
306.7 T 4,061,647
306.8 D 4,061,648
307 F 4,061,650
307 FA 4,061,649
307 H 4,061,651
308 B 4,061,652
314.5 4,061,654
315 4,061,655
332.2 A 4,061,656
343.3 P 4,061,657
346.11 4,061,658
348.34 4,061,659
396 R 4,061,660
397.45 4,061,661
410.9 R 4,061,665
456 A 4,061,663
465 D 4,061,664
500.5 H 4,061,668
505 N 4,061,669
514 D 4,061,670
4,061,671
4,061,672
526 N 4,061,673
534 S 4,061,674
555 A 4,061,675
559 AT 4,061,676
566 A 4,061,677
570 D 4,061,678
586 F 4,061,679
606 4,061,680
606.5 P 4,061,681
607 AR Re.29,489
611 A 4,061,682
613 R 4,061,683
615 B 4,061,684
621 G 4,061,685
631 R 4,061,686
632 HF 4,061,687
651 F 4,061,688
671 R 4,061,689
676 R 4,061,690
860 4,061,691
874 4,061,692
876 R 4,061,693
878 B 4,061,694
929 4,061,695
930 4,061,696
944 4,061,697

CLASS 261

78 A 4,061,698

CLASS 264

0.5 4,061,700
5 4,061,699
24 4,061,702
36 4,061,703
51 4,061,701
83 4,061,704
89 4,061,705
90 4,061,706
95 4,061,707
211 4,061,708
293 4,061,709
300 4,061,710

CLASS 266

193 4,061,317
246 4,061,318
281 4,061,319

CLASS 267

64 R 4,061,320

CLASS 269

41 4,061,321
43 4,061,322
139 4,061,323
325 4,061,324

CLASS 270

40 4,061,325
69 4,061,326
78 4,061,327

CLASS 271

10 4,061,328
4,061,329
174 4,061,330
223 4,061,331
270 4,061,332

CLASS 273

73 E 4,061,333
126 A 4,061,334
134 AC 4,061,336
134 AT 4,061,335
4,061,337
138 R 4,061,338
157 R 4,061,339
189 R 4,061,340

CLASS 274

1 R 4,061,341
23 A 4,061,342
24 R 4,061,343

CLASS 277

26 4,061,344
88 4,061,345
205 4,061,346

CLASS 280

11.21 4,061,348
11.37 H 4,061,347
47.2 4,061,349
87.04 A 4,061,350
4,061,351
106 T 4,061,353
154.5 R 4,061,352
288 4,061,354
605 4,061,355
4,061,356
4,061,357
629 4,061,358
638 4,061,359
652 4,061,360
681 4,061,361
689 4,061,362
718 4,061,363
4,061,364
745 4,061,365

CLASS 285

37 4,061,366
382.2 4,061,367
383 4,061,368

CLASS 290

55 4,061,926

CLASS 292

163 4,061,369
175 4,061,370
198 4,061,371
207 4,061,372
251 4,061,373
260 4,061,382
335 4,061,383

CLASS 293

71 P 4,061,385
71 R 4,061,384
86 4,061,386

CLASS 294

26 4,061,387
82 R 4,061,388
86.3 4,061,389

CLASS 296

1 A 4,061,390
4 4,061,391
28 C 4,061,392
4,061,393
100 4,061,394

CLASS 297

192 4,061,395
283 4,061,396
330 4,061,397

CLASS 299

17 4,061,398
18 4,061,399

CLASS 301

37 AT 4,061,400

CLASS 302

41 4,061,401

CLASS 303

92 4,061,402
106 4,061,403
118 4,061,404

CLASS 307

41 4,061,927
200 B 4,061,928
246 4,061,929
254 4,061,930
262 4,061,933
300 4,061,931
360 4,061,932

CLASS 308

1 R 4,061,374
3.6 4,061,375
8.2 4,061,376
207 R 4,061,377

CLASS 310

41 4,061,936
65 4,061,937
68 C 4,061,935
168 4,061,938
323 4,061,934

CLASS 312

20 4,061,378
201 4,061,379

CLASS 313

25 4,061,939
318 4,061,940
414 4,061,941
417 4,061,942
420 4,061,944
481 4,061,945
482 4,061,943
488 4,061,946

CLASS 318

77 4,061,947
87 4,061,948
154 4,061,949

314 4,061,950
443 4,061,951
572 4,061,952
573 4,061,953

CLASS 320

1 4,061,954
6 4,061,955
22 4,061,956

CLASS 323

1 4,061,959
9 4,061,960
21 4,061,961
22 R 4,061,962
43.5 R 4,061,963

CLASS 324

28 SE 4,061,964
29 4,061,965
40 4,061,968
73 PC 4,061,969
207 4,061,966
260 4,061,967

CLASS 325

2 4,061,970
15 4,061,971
16 4,061,972
17 4,061,973
58 4,061,974
322 4,061,975
4,061,976
323 4,061,977
324 4,061,978
419 4,061,979
4,061,980
4,061,981
464 4,061,982

CLASS 330

149 4,061,984
207 P 4,061,983

CLASS 331

94.5 C 4,061,985
94.5 PE 4,061,986
111 4,061,987

CLASS 333

7 R 4,061,989
10 4,061,990
22 R 4,061,991
73 R 4,061,992

CLASS 335

20 4,061,993
202 4,061,994

CLASS 338

32 H 4,061,988

CLASS 339

8 P 4,061,381
8 R 4,061,380
17 M 4,061,405
47 C 4,061,406
75 P 4,061,407
4,061,409
75 R 4,061,408
95 R 4,061,413
113 B 4,061,410
159 R 4,061,411
263 R 4,061,412

CLASS 340

24 4,061,995
27 R 4,061,996
146.1 AX 4,061,997
146.3 AC 4,061,998
187 4,062,004
198 4,062,005
228 R 4,062,006
309.1 4,062,007
323 R 4,062,008
324 R 4,062,009
347 DA 4,062,013
347 DD 4,062,014

CLASS 343

5 NA 4,062,010
7 A 4,062,011
4,062,012
120 4,062,015
178 4,062,016
722 4,062,017
754 4,062,018
797 4,062,019

CLASS 346

33 R 4,062,020
136 4,062,021

CLASS 350

4 4,061,414
6 4,061,415
96 C 4,061,416
159 4,061,417
160 LC 4,061,418
184 4,061,419
199 4,061,420
214 4,061,421
293 4,061,422

CLASS 351

16 4,061,423

CLASS 354

38 4,062,022
4,062,023
60 R 4,062,024
76 4,062,025
106 4,062,026
127 4,062,027
152 4,062,028
232 4,062,029
286 4,062,030
299 4,062,031

CLASS 355

63 4,061,424

CLASS 356

110 4,061,425
138 4,061,426
159 4,061,427
175 4,061,428
227 4,061,431

CLASS 357

13 4,062,032
15 4,062,033
16 4,062,034
17 4,062,035
22 4,062,036
24 4,062,037
30 4,062,038
51 4,062,039
54 4,062,040

CLASS 358

8 4,062,041
21 4,062,044
27 4,062,042
86 4,062,043
88 4,062,045
93 4,062,046

CLASS 360

26 4,062,047
30 4,062,050
72 4,062,048
78 4,062,049

CLASS 361

6 4,062,051
28 4,062,052
119 4,062,053
4,062,054
160 4,062,055
172 4,062,056

CLASS 362

20 4,061,911
34 4,061,910
287 4,061,912
357 4,061,913

CLASS 363

22 4,061,957
71 4,062,057
81 4,061,958

CLASS 364

200 4,062,058
4,062,059
436 4,061,902
4,061,903
608 4,061,904
718 4,061,907
724 4,061,905
4,062,060
735 4,061,906
900 4,062,061

CLASS 365

16 4,062,003
27 4,062,002
49 4,062,001
182 4,061,999
203 4,062,000

CLASS 366

111 4,061,315
145 4,061,314
303 4,061,316
340 4,061,313

CLASS 401

216 4,061,430

CLASS 403

318 4,061,432
359 4,061,433

CLASS 404

4 4,061,434
10 4,061,435

CLASS 407

22 4,060,881
61 4,060,880

CLASS 408

3 4,061,436
42 4,061,437
143 4,061,438

CLASS 415

18 4,061,439

CLASS 416

157 R 4,061,440
175 4,061,441

CLASS 417

36 4,061,442
222 4,061,443
312 4,061,444

CLASS 418

54 4,061,445
133 4,061,446
142 4,061,447
170 4,061,448
226 4,061,449
253 4,061,450

CLASS 423

67 4,061,711
4,061,712
213.5 4,061,713
220 4,061,714
235 4,061,743
242 4,061,715
244 4,061,716
265 4,061,720
272 4,061,721
276 4,061,723
329 4,061,717
335 4,061,724
356 4,061,718
445 4,061,719
634 4,061,725
4,061,726
4,061,727

CLASS 424

14 4,061,728
59 4,061,730
101 4,061,731
117 4,061,732
143 4,061,733
155 4,061,734
177 4,061,735
4,061,736
4,061,737
195 4,061,738
4,061,739
202 4,061,740
232 4,061,741
234 4,061,742
243 4,061,744
244 4,061,745
4,061,746
4,061,747
246 4,061,748
4,061,749
249 4,061,750
250 4,061,751
4,061,752
253 4,061,753
258 4,061,754
263 4,061,755
4,061,756
4,061,757
4,061,758
4,061,759
267 4,061,760
270 4,061,761
4,061,762
273 R 4,061,722
274 4,061,763
275 4,061,764
278 4,061,765
279 4,061,766
282 4,061,767
283 4,061,768
4,061,769
304 4,061,770
4,061,771
4,061,772
4,061,791
305 4,061,729
313 4,061,773
325 4,061,774
330 4,061,775
4,061,776
4,061,777
4,061,778
331 4,061,779
358 4,061,780

CLASS 425

66 4,061,451
78 4,061,452
4,061,453
88 4,061,454
112 4,061,455
140 4,061,456
385 4,061,457
392 4,061,458
403 4,061,459
459 4,061,460
462 4,061,461
464 4,061,462

CLASS 426

60 4,061,781
86 4,061,782
87 4,061,783
93 4,061,784
124 4,061,785
138 4,061,786
140 4,061,787
248 4,061,788
250 4,061,789
303 4,061,790
330.2 4,061,792
433 4,061,793
486 4,061,794
535 4,061,795
4,061,796
590 4,061,797
607 4,061,798

CLASS 427

43 4,061,799
46 4,061,800
192 4,061,801
304 4,061,802
323 4,061,803

CLASS 428

17 4,061,804
31 4,061,805
35 4,061,806
36 4,061,807
42 4,061,808
50 4,061,809
85 4,061,810
95 4,061,811
117 4,061,812
183 4,061,813
196 4,061,814
215 4,061,815
218 4,061,816
246 4,061,817
4,061,818
294 4,061,819
304 4,061,821
311 4,061,820
315 4,061,822
318 4,061,823
328 4,061,824
355 4,061,825
356 4,061,826
368 4,061,827
403 4,061,828
451 4,061,829
469 4,061,830
480 4,061,831
500 4,061,832
511 4,061,833
522 4,061,834
4,061,835
537 4,061,836
609 4,061,837

CLASS 429

22 4,061,838
93 4,061,839
104 4,061,840
112 4,061,841
116 4,061,842
136 4,061,843

CLASS 431

9 4,061,463

CLASS 526

1 4,061,869
4 4,061,844
11.1 4,061,845
16 4,061,846
49 4,061,847
61 4,061,848
67 4,061,858
68 4,061,849
114 4,061,857
220 4,061,850

CLASS 536

88 4,061,859

CLASS 542

462 4,061,860

CLASS 544

16 4,061,630
21 4,061,851
27 4,061,852
4,061,862
30 4,061,853
4,061,861
53 4,061,631
60 4,061,632
88 4,061,854
106 4,061,633
122 4,061,855
158 4,061,634
172 4,061,635
193 4,061,856

CLASS 548

360 4,061,653

CLASS 560

18 4,061,863
26 4,061,662
4,061,864
53 4,061,666
121 4,061,865
4,061,866
219 4,061,867
246 4,061,868
261 4,061,667

CLASSIFICATION OF DESIGNS

D2—	320	246,551		78	246,562		384	246,573			246,583		27	246,595		18	246,606
	406	246,552		150	246,563	D9—	67	246,574		57	246,584	D23—	19	246,596	D31—	21.3	246,607
D6—	8	246,553		154	246,564	14—	91	246,585	D15—	12	246,586		55	246,597	D34—	4 R	246,608
	71	246,554		189	246,565	D10—	30	246,575		56	246,587	D24—	1.1	246,598		5 PP	246,611
	75	246,555		194	246,566			246,576	D16—	33	246,588		17	246,599		5 SS	246,609
	79	246,556	D8—	26	246,567			246,577		42	246,589		56	246,600			246,610
	130	246,557		40	246,568		106	246,578	D19—	13	246,590	D25—	74	246,601		14 D	246,612
	191	246,558		45	246,569	D11—	34	246,579			246,591	D27—	2	246,602		15 AJ	246,613
D7—	47	246,559		98	246,570		157	246,580		75	246,592		3	246,603		15 BB	246,614
	76	246,560		350	246,571	D13—	13	246,581		90	246,593			246,604			
		246,561		354	246,572	D14—	6	246,582	D22—	19	246,594	D28—	13	246,605	D87—	1 R	246,615

CLASSIFICATION OF PLANTS

P.—	45	4,161		79	4,162

DEFENSIVE PUBLICATIONS APPLICATIONS

[Notice of Dec. 16, 1969, 869 O.G. 6877]

210—	52	T965,001	252—	421	T965,002	427—	409	T965,003	526—	128	T965,004	542—	429	T965,005

GEOGRAPHICAL INDEX OF RESIDENCE OF INVENTORS

(U.S. States, Territories and Armed Forces, the Commonwealth of Puerto Rico, and the Canal Zone)

Alabama	1	Kentucky	21	Oregon	41
Alaska	2	Louisiana	22	Pennsylvania	42
American Samoa	3	Maine	23	Puerto Rico	43
Arizona	4	Maryland	24	Rhode Island	44
Arkansas	5	Massachusetts	25	South Carolina	45
California	6	Michigan	26	South Dakota	46
Canal Zone	7	Minnesota	27	Tennessee	47
Colorado	8	Mississippi	28	Texas	48
Connecticut	9	Missouri	29	Utah	49
Delaware	10	Montana	30	Vermont	50
District of Columbia	11	Nebraska	31	Virginia	51
Florida	12	Nevada	32	Virgin Islands	52
Georgia	13	New Hampshire	33	Washington	53
Guam	14	New Jersey	34	West Virginia	54
Hawaii	15	New Mexico	35	Wisconsin	55
Idaho	16	New York	36	Wyoming	56
Illinois	17	North Carolina	37	U.S. Air Force	57
Indiana	18	North Dakota	38	U.S. Army	58
Iowa	19	Ohio	39	U.S. Navy	59
Kansas	20	Oklahoma	40		

(First number in listing denotes location according to above key. Refer to patent number in body of the Official Gazette to obtain details as to inventor name, location, etc.)

PATENTS

1 :	4,060,948		4,061,391		4,061,396		4,060,898		4,061,835		4,060,940
	4,061,512		4,061,400		4,061,425		4,060,908		4,061,884		4,061,042
2 :	4,061,197		4,061,415		4,062,006		4,060,929		4,061,896		4,061,114
4 :	4,061,058		4,061,427	9 :	4,060,885		4,060,959		4,061,911		4,061,129
	4,061,107		4,061,437		4,060,979		4,061,012		4,061,973		4,061,202
	4,061,216		4,061,441		4,060,980		4,061,038		4,061,988		4,061,259
	4,061,232		4,061,480		4,061,006		4,061,064		4,062,047		4,061,338
	4,061,460		4,061,518		4,061,025		4,061,069		4,062,053		4,061,409
	4,061,885		4,061,520		4,061,026		4,061,073		4,062,055		4,061,412
5 :	4,060,852		4,061,522		4,061,044		4,061,079	18 :	4,061,093		4,061,426
	4,060,926		4,061,530		4,061,068		4,061,092		4,061,183		4,061,662
6 :	4,060,858		4,061,561		4,061,247		4,061,099		4,061,187		4,061,731
	4,060,868		4,061,574		4,061,292		4,061,101		4,061,201		4,061,864
	4,060,891		4,061,579		4,061,344		4,061,135		4,061,353		4,061,893
	4,060,897		4,061,592		4,061,439		4,061,136		4,061,384		4,061,979
	4,060,930		4,061,599		4,061,597		4,061,138		4,061,524		4,062,052
	4,060,931		4,061,605		4,061,622		4,061,139		4,061,541		4,062,058
	4,060,936		4,061,736		4,061,623		4,061,150		4,061,607	25 :	Re.29,487
	4,060,938		4,061,793		4,061,703		4,061,188		4,061,626		4,060,854
	4,060,986		4,061,800		4,061,867		4,061,194		4,061,630		4,060,861
	4,060,991		4,061,812		4,061,876		4,061,203		4,061,738		4,060,902
	4,061,017		4,061,815		4,062,004		4,061,237		4,061,755		4,060,915
	4,061,020		4,061,834	10 :	4,061,168		4,061,241		4,061,861		4,060,933
	4,061,022		4,061,837		4,061,590		4,061,243		4,061,936		4,061,050
	4,061,029		4,061,872		4,061,685		4,061,272		4,061,981		4,061,158
	4,061,040		4,061,877		4,061,715		4,061,277		4,062,007		4,061,286
	4,061,065		4,061,880	11 :	4,061,658		4,061,281	19 :	4,060,960		4,061,314
	4,061,071		4,061,882	12 :	4,060,867		4,061,309		4,061,021		4,061,326
	4,061,083		4,061,887		4,060,876		4,061,315		4,061,074		4,061,395
	4,061,089		4,061,898		4,060,896		4,061,321		4,061,167		4,061,423
	4,061,102		4,061,901		4,060,946		4,061,335		4,061,284		4,061,566
	4,061,122		4,061,909		4,060,962		4,061,394		4,061,576		4,061,573
	4,061,132		4,061,912		4,061,123		4,061,445		4,061,902		4,061,578
	4,061,134		4,061,925		4,061,130		4,061,455	20 :	4,060,921		4,061,588
	4,061,161		4,061,926		4,061,154		4,061,463		4,060,961		4,061,654
	4,061,173		4,061,927		4,061,196		4,061,470		4,061,015		4,061,682
	4,061,206		4,061,930		4,061,235		4,061,478		4,061,457		4,061,836
	4,061,244		4,061,931		4,061,251		4,061,521		4,061,722		4,061,890
	4,061,255		4,061,974		4,061,256		4,061,563		4,061,753		4,061,900
	4,061,257		4,061,977		4,061,385		4,061,582		4,061,847		4,061,944
	4,061,302		4,061,978		4,061,483		4,061,589	21 :	4,060,862		4,061,946
	4,061,340		4,061,986		4,061,577		4,061,591		4,061,082	26 :	4,060,859
	4,061,342		4,061,989		4,061,797		4,061,610		4,061,373		4,060,878
	4,061,348		4,061,995		4,061,809		4,061,611		4,061,961		4,060,910
	4,061,351		4,062,002		4,061,897		4,061,648	22 :	Re.29,488		4,060,935
	4,061,352		4,062,003	13 :	4,061,096		4,061,689		4,060,894		4,060,997
	4,061,354		4,062,041		4,061,133		4,061,695		4,061,125		4,061,002
	4,061,366		4,062,048		4,061,249		4,061,698		4,061,242		4,061,014
	4,061,367		4,062,049	16 :	4,061,031		4,061,711		4,061,322		4,061,034
	4,061,370	8 :	4,060,907		4,061,094		4,061,712		4,061,465		4,061,070
	4,061,372		4,060,956	17 :	Re.29,486		4,061,764		4,061,634		4,061,076
	4,061,375		4,061,115		4,060,855		4,061,787	23 :	4,061,128		4,061,077
	4,061,376		4,061,267		4,060,872		4,061,817	24 :	4,060,904		4,061,121

	4,061,124		4,061,280		4,061,081		4,061,063		4,060,971		4,061,162
	4,061,165		4,061,301		4,061,100		4,061,067		4,061,013		4,061,230
	4,061,218		4,061,325		4,061,104		4,061,090		4,061,019		4,061,231
	4,061,350		4,061,333		4,061,110		4,061,145		4,061,053		4,061,290
	4,061,364		4,061,371		4,061,153		4,061,146		4,061,059		4,061,320
	4,061,379		4,061,405		4,061,192		4,061,151		4,061,108		4,061,327
	4,061,386		4,061,410		4,061,193		4,061,175		4,061,137		4,061,331
	4,061,402		4,061,420		4,061,222		4,061,184		4,061,163		4,061,349
	4,061,403		4,061,461		4,061,414		4,061,190		4,061,170		4,061,380
	4,061,452		4,061,471		4,061,419		4,061,205		4,061,270		4,061,389
	4,061,453		4,061,489		4,061,473		4,061,213		4,061,279		4,061,392
	4,061,593		4,061,517		4,061,487		4,061,223		4,061,306		4,061,442
	4,061,601		4,061,529		4,061,496		4,061,297		4,061,318		4,061,444
	4,061,639		4,061,542		4,061,497		4,061,308		4,061,329		4,061,469
	4,061,657		4,061,586		4,061,503		4,061,337		4,061,368		4,061,481
	4,061,665		4,061,595		4,061,504		4,061,346		4,061,399		4,061,506
	4,061,666		4,061,602		4,061,510		4,061,404		4,061,406		4,061,513
	4,061,709		4,061,618		4,061,514		4,061,407		4,061,488		4,061,545
	4,061,742		4,061,636		4,061,523		4,061,429		4,061,492		4,061,546
	4,061,756		4,061,655		4,061,527		4,061,434		4,061,516		4,061,549
	4,061,760		4,061,663		4,061,543		4,061,443		4,061,526		4,061,659
	4,061,790		4,061,679		4,061,550		4,061,474		4,061,531		4,061,788
	4,061,791		4,061,681		4,061,571		4,061,482		4,061,536		4,061,799
	4,061,833		4,061,686		4,061,584		4,061,485		4,061,544		4,061,824
	4,061,841		4,061,694		4,061,585		4,061,507		4,061,562		4,061,846
	4,061,859		4,061,717		4,061,603		4,061,525		4,061,572		4,061,850
	4,061,866		4,061,732		4,061,609		4,061,533		4,061,606		4,061,886
	4,061,935		4,061,739		4,061,617		4,061,547		4,061,608		4,061,903
	4,061,947		4,061,740		4,061,627		4,061,570		4,061,612		4,061,933
	4,061,985		4,061,750		4,061,651		4,061,580		4,061,613		4,061,954
27 :	4,061,126		4,061,751		4,061,652		4,061,600		4,061,614		4,061,960
	4,061,228		4,061,759		4,061,670		4,061,629		4,061,628		4,061,967
	4,061,245		4,061,778		4,061,672		4,061,702		4,061,643		4,061,971
	4,061,268		4,061,783		4,061,688		4,061,704		4,061,737		4,061,999
	4,061,273		4,061,795		4,061,699		4,061,721		4,061,763		4,062,000
	4,061,383		4,061,796		4,061,705		4,061,746		4,061,771		4,062,017
	4,061,408		4,061,802		4,061,716		4,061,770		4,061,775		4,062,056
	4,061,505		4,061,810		4,061,724		4,061,784		4,061,807	49 :	4,060,860
	4,061,624		4,061,820		4,061,862		4,061,805		4,061,822		4,061,087
	4,061,826		4,061,829		4,061,892		4,061,845		4,061,830		4,061,142
	4,061,873		4,061,842		4,061,910		4,061,851		4,061,894		4,061,511
29 :	4,060,901		4,061,852		4,061,941		4,061,856		4,061,924		4,061,956
	4,060,920		4,061,875		4,061,943		4,061,883		4,061,937	51 :	4,060,996
	4,060,944		4,061,904		4,061,945		4,061,919		4,061,949		4,061,028
	4,061,152		4,061,932		4,061,951		4,061,934		4,061,963		4,061,041
	4,061,224		4,061,940		4,062,012		4,061,939		4,062,011		4,061,046
	4,061,226		4,061,958		4,062,038		4,061,955		4,062,032		4,061,106
	4,061,274		4,061,959		4,062,040		4,062,010	44 :	4,061,157		4,061,189
	4,061,336		4,061,962		4,062,054	40 :	4,060,924		4,061,260		4,061,269
	4,061,667		4,061,965		4,062,057		4,060,928		4,061,282		4,061,294
30 :	4,061,312		4,062,001		4,062,061		4,061,131	45 :	4,061,285		4,061,361
31 :	4,061,393		4,062,005	37 :	Re.29,490		4,061,200		4,061,553		4,061,535
32 :	4,061,435		4,062,019		4,060,866		4,061,316		4,061,806		4,061,621
	4,062,051	35 :	4,060,909		4,060,950		4,061,388		4,061,823		4,061,708
33 :	4,060,941		4,061,271		4,060,969		4,061,638	46 :	4,061,734		4,061,916
	4,061,227		4,061,450		4,060,970	41 :	4,060,895	47 :	4,060,934	53 :	4,060,978
	4,061,252		4,061,917		4,061,258		4,061,024		4,061,095		4,061,007
	4,061,831		4,061,921		4,061,539		4,061,057		4,061,195		4,061,295
34 :	4,060,870	36 :	4,060,881		4,061,700		4,061,127		4,061,360		4,061,347
	4,060,990		4,060,905		4,061,804		4,061,204		4,061,548		4,061,387
	4,061,043		4,060,916		4,061,818		4,061,238		4,061,598		4,061,620
	4,061,049		4,060,918		4,061,863		4,061,296		4,061,914		4,061,888
	4,061,105		4,060,932	38 :	4,060,923		4,061,432	48 :	4,060,888		4,061,891
	4,061,144		4,060,951	39 :	4,060,880	42 :	4,060,864		4,060,912		4,061,996
	4,061,149		4,060,973		4,060,889		4,060,865		4,060,954	55 :	4,061,047
	4,061,160		4,060,984		4,060,925		4,060,871		4,060,988		4,061,266
	4,061,225		4,060,987		4,060,937		4,060,884		4,060,989		4,061,276
	4,061,246		4,061,004		4,060,942		4,060,886		4,060,998		4,061,813
	4,061,248		4,061,037		4,060,943		4,060,914		4,060,999		4,061,895
	4,061,253		4,061,039		4,060,981		4,060,945		4,061,120	56 :	4,060,927
	4,061,263		4,061,075		4,061,000						

DESIGN PATENTS

6 :	246,557		246,579	20 :	246,614		246,599		246,559	45 :	246,597
	246,567	17 :	246,553	24 :	246,598		246,603		246,571		246,602
	246,572		246,564	25 :	246,593		246,604		246,581	47 :	246,586
	246,580		246,588	26 :	246,570	34 :	246,574		246,605	48 :	246,566
	246,594		246,615		246,596		246,584		246,606		246,568
8 :	246,607	18 :	246,554	27 :	246,561		246,587	37 :	246,595	51 :	246,611
10 :	246,590		246,578	29 :	246,565	36 :	246,555	40 :	246,585	53 :	246,612
	246,591	19 :	246,573		246,569		246,556	44 :	246,560	55 :	246,552
12 :	246,562										

PLANT PATENTS

12 :	4,161	36 :	4,162								

DEFENSIVE PUBLICATIONS APPLICATIONS

[Notice of Dec. 16, 1969, 869 O.G. 6877]

	T965,005	37 :	T965,001	39 :	T965,002						

CHANGE OF ADDRESS FORM

NAME—FIRST, LAST

COMPANY NAME OR ADDITIONAL ADDRESS LINE

STREET ADDRESS

CITY | STATE | ZIP CODE

PLEASE PRINT OR TYPE

(or) COUNTRY

Mail this form to: NEW ADDRESS

Superintendent of Documents
Government Printing Office SSOM
Washington, D.C. 20402

Attach last subscription label here.

SUBSCRIPTION ORDER FORM

SUBSCRIPTION ORDER FORM

ENTER MY SUBSCRIPTION TO:

@ $ Domestic; @ $ Foreign.

NAME—FIRST, LAST

COMPANY NAME OR ADDITIONAL ADDRESS LINE

STREET ADDRESS

CITY | STATE | ZIP CODE

PLEASE PRINT OR TYPE

(or) COUNTRY

☐ Remittance Enclosed (Make checks payable to Superintendent of Documents)

☐ Charge to my Deposit Account No. ....

MAIL ORDER FORM TO:
Superintendent of Documents
Government Printing Office
Washington, D.C. 20402

OFFICIAL GAZETTE of the UNITED STATES PATENT and TRADEMARK OFFICE

December 13, 1977 | Volume 965 | Number 2

CONTENTS

The following are mailed under direction of the Superintendent of Documents, Government Printing Office, Washington, D.C., 20402, to whom all subscriptions should be made payable and all communications addressed:

THE OFFICIAL GAZETTE (PATENTS SECTION), issued weekly, subscription $342.20 per annum for first class mailing. also available as fourth-class mail at $250.00; foreign mailing $85.55 additional; single copies $6.60 each.

THE OFFICIAL GAZETTE (TRADEMARK SECTION), issued weekly, subscription $88.40 per annum, foreign mailing $22.10 additional; single copies $1.70 each.

CIRCULARS OF GENERAL INFORMATION concerning PATENTS, price 60 cents each.

CIRCULARS OF GENERAL INFORMATION concerning TRADEMARKS, price 50 cents each.

PRINTED COPIES OF PATENTS are furnished by the Patent and Trademark Office at 50 cents each; PLANT PATENTS in color, $1.00 each; copies of TRADEMARKS AND DESIGN PATENTS at 20 cents each. Address orders to the Commissioner of Patents and Trademarks, Washington, D.C., 20231.

Printing authorized by Section 11(a)3 of Title 35, U.S. Code P.T.O.

PATENT AND TRADEMARK OFFICE NOTICES

Submission of Uniform Assignee Names on the Issue Fee Payment Form PTOL–85b

The Patent and Trademark Office is experiencing problems when computer-sorting assignee names for the Patentee Index because of the non-uniform use of the names of certain companies and corporations on the issue fee payment form PTOL–85b. The use of different spellings or nomenclature for the same company requires the Office to expend time and effort to determine whether the various name forms are in fact for the same company. If such inconsistencies are not corrected, patents to the same company will appear in different locations in the Patentee Index. An example of inconsistent use is "ABC Company, Ltd." and "ABC Co., Limited."

Therefore, persons who list assignee names on issue fee payment form PTOL–85b should ensure that the same company name form is used for all patents issuing to a particular company.

RICHARD J. SHAKMAN,
Assistant Commissioner for Administration.

Nov. 17, 1977.

Trademark Seminar in Office Practice and Procedure

A Seminar in Office Practice and Procedures was established in 1973 as a training course for new trademark examiners. The course covers all phases of trademark law, office practice and procedure. The Seminar deals with both substantive and procedural issues. Among the topics covered are types of marks, types of applications and registrations, ownership of marks, and procedural and substantive examination of applications, emphasizing statutory grounds for refusal to register, classification of goods, and searching.

Members of the Seminar will prosecute a sample application through the various stages of Office procedures beginning with the initial examination and preparation of a first action, the final refusal to register based on statutory grounds, the writing of an examiner's statement on appeal, and concluding with an oral hearing before the Trademark Trial and Appeal Board.

Lectures are conducted by supervisory personnel, senior examiners, members of the Trademark Trial and Appeal Board and attorneys from outside the Patent and Trademark Office.

The Seminar is given in the Patent and Trademark Office, 2011 Jefferson Davis Highway, Crystal Plaza, Arlington, Va. The next course is scheduled for January 6 to February 10, 1978. Classes meet from 9:00 A.M. to 11:30 A.M., Monday through Friday.

While the course is intended for new trademark examiners, a limited number of applicants from government agencies and from outside the government will be accepted for training on a space available basis. To be eligible for training, a candidate should possess a law degree, and be involved in trademark practice. The fee for attendance at this course is $400.00.

Additional information concerning this Seminar may be obtained from the Office of Trademark Program Control at the Patent and Trademark Office. Inquiries should be addressed to the Commissioner of Patents and Trademarks, Patent and Trademark Office, Washington, D.C. 20231, Attention: Office of Trademark Program Control, or by telephone at 703–557–3881.

BERNARD A. MEANY,
Assistant Commissioner for Trademarks.

Nov. 22, 1977.

REISSUE APPLICATIONS FILED

Notice under 37 CFR 1.11(b). The reissue applications listed below are open to inspection by the general public in the indicated Examining Groups and copies may be obtained by paying the fee therefor (37 CFR 1.21(b)).

3,280,974, Re. S.N. 841,959, Filed Oct. 13, 1977, Cl. 209/111.8, METHOD AND APPARATUS FOR RECOGNIZING PRINTED CURRENCY, John B. Riddle, et al., Owner of Record: *Micro-Magnetic Industries, Inc., Palo Alto, Calif.*, Attorney or Agent: Karl A. Limbach, et al., Ex. Gp.: 311

3,397,588, Re. S.N. 833,762, Filed Sept. 16, 1977, Cl. 74/376, DRIVE FOR A TAPPING ATTACHMENT, Allan S. Johnson, Owner of Record: *Tapmatic Corporation, Irvine, Calif.*, Attorney or Agent: Albert M. Herzig, et al., Ex. Gp.: 345

3,773,737, Re. S.N. 842,379, Filed Oct. 11, 1977, Cl. 260/78 A, HYDROLYZABLE POLYMERS OF AMINO ACID AND HYDROXY ACIDS, Murray Goodman, et al., Owner of Record: *Suture Inc., Coventry, Conn.*, Attorney or Agent: Thomas P. Sarro, Ex. Gp.: 143

3,798,407, Re. S.N. 843,114, Filed Oct. 17, 1977, Cl. 219/92, PROCESS FOR WELDING SHEET METAL COATED WITH LAYERS, Otto Alfred Becker, Owner of Record: *Inventor,* Attorney or Agent: Thomas E. Beall, Jr., et al., Ex. Gp.: 213

3,886,092, Re. S.N. 843,351, Filed Oct. 18, 1977, Cl. 252/443, PROCESS FOR PRODUCING UNSATURATED CARBOXYLIC ACIDS, Masahiro Wada, et al., Owner of Record: *Nippon Shokubai Kagaku Kogyo Co., Ltd., Osaka, Japan,* Attorney or Agent: Leonard W. Sherman, et al., Ex. Gp.: 115

3,900,205, Re. S.N. 825,401, Filed Aug. 17, 1977, Cl. 280/11.35 K, SKI SAFETY BINDING, Brigitte Voster-Alber, et al., Owner of Record: *Vereinigte Baubeschlagfabriken Gretsch and Co., G.m.b.H., Stuttgart, Germany,* Attorney or Agent: Paul M. Craig, Jr., et al., Ex. Gp.: 316

3,905,414, Re. S.N. 834,712, Filed Sept. 19, 1977, Cl. 160/330, DRAPERY CONNECTOR ASSEMBLY, Gerald E. Guebert, et al., Owner of Record: *Inventors,* Attorney or Agent: E. Mickey Hubbard, et al., Ex. Gp.: 351

3,907,649, Re. S.N. 843,113, Filed Oct. 17, 1977, Cl. 204/15, ELECTROPLATING OF THE CUT EDGES OF SHEET METAL PANELS, Otto Alfred Becker, Owner of Record: *Inventor,* Attorney or Agent: Thomas E. Beall, Jr., et al., Ex. Gp.: 114

3,913,250, Re. S.N. 843,757, Filed Oct. 20, 1977, Cl. 40/78, FILING SYSTEM AND ELEMENTS THEREFOR, Arthur T. Spees, Owner of Record: *Inventor,* Attorney or Agent: Louis J. Knobbe, et al., Ex. Gp.: 333

3,913,709, Re. S.N. 842,008, Filed Oct. 13, 1977, Cl. 188/73.4, SPOT-TYPE DISC BRAKE, Jochen Burgdorf, et al., Owner of Record: *ITT Industries, Inc., New York, N.Y.,* Attorney or Agent: Walter J. Baum, et al., Ex. Gp.: 315

3,917,304, Re. S.N. 840,662, Filed Oct. 11, 1977, Cl. 280/43.23, LOADING CONTAINER MEANS, Frances E. Mautz, Owner of Record: *Inventor,* Attorney or Agent: Thomas M. Ferrill, Jr., et al., Ex. Gp.: 316

3,946,133, Re. S.N. 843,350, Filed Oct. 18, 1977, Cl. 428/400, ELONGATED TEXTILE PRODUCT, Roger Vidal, et al., Owner of Record: *Rhone-Poulenc-Textile S.A., Paris, France,* Attorney or Agent: Leonard W. Sherman, et al., Ex. Gp.: 164

3,956,740, Re. S.N. 845,255, Filed Oct. 25, 1977, Cl. 340/172.5, PORTABLE DATA ENTRY APPARATUS, Mi-

chael Dale Jones, et al., Owner of Record: *Telxon Corporation, Houston, Tex.*, Attorney or Agent: Paul M. Janicke, et al., Ex. Gp.: 237

3,968,227, Re. S.N. 843,399, Filed Oct. 19, 1977, Cl. 424/273, GUANIDINO, THIOUREIDO AND ISOTHIOUREIDO DERIVATIVES CONTAINING IMIDAZOLE GROUPS, Graham John Durant, et al., Owner of Record: *Smith Kline & French Laboratories Limited, Philadelphia, Pa.*, Attorney or Agent: William H. Edgerton, et al., Ex. Gp.: 125

3,972,546, Re. S.N. 839,141, Filed Oct. 3, 1977, Cl. 285/18, LOCKING ASSEMBLY AND A SEAL ASSEMBLY FOR A WELL, Samuel W. Putch, Owner of Record: *Samuel W. Putch, Norman A. Nelson, each 50% interest; Houston, Tex.*, Attorney or Agent: James F. Weiler, et al., Ex. Gp.: 353

4,015,582, Re. S.N. 840,300, Filed Oct. 7, 1977, Cl. 126/270, SOLAR HEAT COLLECTOR, Benjamin Y. H. Liu, et al., Owner of Record: *The Regents of the University of Minnesota, Minneapolis, Minn.*, Attorney or Agent: L. Paul Burd, et al., Ex. Gp.: 344

4,030,671, Re. S.N. 822,379, Filed Aug. 5, 1977, Cl. 241/15, APPARATUS FOR PULPING WASTE PAPER MATERIALS, Joseph Walter Couture, Owner of Record: *The Black Clawson Company, Middletown, Ohio,* Attorney or Agent: Biebel, French & Nauman, Ex. Gp.: 325

4,042,307, Re. S.N. 845,256, Filed Oct. 25, 1977, Cl. 403/290, JOINING, Arthur B. Jarvis, Owner of Record: *Bose Corporation, Framingham, Mass.*, Attorney or Agent: Charles Hieken, Ex. Gp.: 353

PATENT NOTICES

Certificates of Correction for the Week of Dec. 13, 1977

P.P. 3,404	4,015,372	4,033,264	4,041,515
Re. 29,290	4,016,176	4,033,629	4,041,689
Re. 29,392	4,016,317	4,033,780	4,041,707
D. 245,462	4,016,369	4,033,805	4,041,787
D. 245,542	4,020,030	4,033,947	4,042,303
D. 245,759	4,020,320	4,034,021	4,042,327
3,840,413	4,020,332	4,034,040	4,042,379
3,880,303	4,021,552	4,034,212	4,042,764
3,885,388	4,021,664	4,034,239	4,042,958
3,887,914	4,021,723	4,034,307	4,043,171
3,893,885	4,022,028	4,034,365	4,043,191
3,905,398	4,022,304	4,034,591	4,043,196
3,910,930	4,022,808	4,034,702	4,043,602
3,926,484	4,022,915	4,035,072	4,043,881
3,947,643	4,023,494	4,035,410	4,043,885
3,952,304	4,024,332	4,035,512	4,044,307
3,954,620	4,024,900	4,036,150	4,044,390
3,955,987	4,025,008	4,036,813	4,044,420
3,962,252	4,025,570	4,036,853	4,044,913
3,962,705	4,025,612	4,036,940	4,045,220
3,977,296	4,026,391	4,037,118	4,045,920
3,987,252	4,026,506	4,037,293	4,046,091
3,989,292	4,027,770	4,037,469	4,046,114
3,991,481	4,028,002	4,037,763	4,046,211
3,993,694	4,028,124	4,038,150	4,046,218
3,997,123	4,029,217	4,038,174	4,046,248
3,997,864	4,029,340	4,038,361	4,046,273
4,000,926	4,029,703	4,038,533	4,046,349
4,001,296	4,029,793	4,038,646	4,046,466
4,001,519	4,029,864	4,038,737	4,046,534
4,003,998	4,030,054	4,038,784	4,046,671
4,004,915	4,030,555	4,039,236	4,047,011
4,006,016	4,030,833	4,039,560	4,047,196
4,006,990	4,031,068	4,040,234	4,047,322
4,010,271	4,031,080	4,040,326	4,047,446
4,011,332	4,031,215	4,040,524	4,047,508
4,012,351	4,031,522	4,040,590	4,047,589
4,012,623	4,031,556	4,040,806	4,047,864
4,013,685	4,031,824	4,040,919	4,053,561
4,014,579	4,032,934	4,041,311	
4,014,888	4,032,949	4,041,353	
4,015,096	4,033,005	4,041,387	

PATENT EXAMINING CORPS

RENE D. TEGTMEYER, Assistant Commissioner

WILLIAM FELDMAN, Deputy Assistant Commissioner

CONDITION OF PATENT APPLICATIONS AS OF NOVEMBER 19, 1977

PATENT EXAMINING GROUPS	Actual Filing Date of Oldest New Case Awaiting Action
CHEMICAL EXAMINING GROUPS	
GENERAL CHEMISTRY AND PETROLEUM CHEMISTRY, GROUP 110—S. N. ZAHARNA, Director Inorganic Compounds; Inorganic Compositions; Organo-Metal and Organo-Metalloid Chemistry; Metallurgy; Metal Stock; Electro Chemistry; Batteries; Hydrocarbons; Mineral Oil Technology; Lubricating Compositions; Gaseous Compositions; Fuel and Igniting Devices.	5-2-77
GENERAL ORGANIC CHEMISTRY, GROUP 120—A. L. LEAVITT, Director Heterocyclic, Amides; Alkaloids; Azo; Sulfur; Misc. Esters; Carbohydrates; Herbicides; Poisons; Medicines; Cosmetics; Steroids; Oxo and Oxy; Quinones; Acids; Carboxylic Acid Esters; Acid Anhydrides; Acid Halides.	1-14-77
HIGH POLYMER CHEMISTRY, PLASTICS AND MOLDING, GROUP 140—A. P. KENT, Director Synthetic Resins; Rubber; Proteins; Macromolecular Carbohydrates; Mixed Synthetic Resin Compositions; Synthetic Resins With Natural Polymers and Resins; Natural Resins; Reclaiming; Pore-Forming; Compositions (Part) e.g.: Coating; Molding; Ink; Adhesive and Abrading Compositions; Molding, Shaping, and Treating Processes.	2-8-77
COATING AND LAMINATING, BLEACHING, DYEING AND PHOTOGRAPHY, GROUP 160—R. FRIEDMAN, Director Coating; Processes and Misc. Products; Laminating Methods and Apparatus; Stock Materials; Adhesive Bonding; Special Chemical Manufactures; Special Utility Compositions; Bleaching; Dyeing and Photography.	11-26-76
SPECIALIZED CHEMICAL INDUSTRIES AND CHEMICAL ENGINEERING, GROUP 170—H. S. VINCENT, Director Fertilizers; Foods; Fermentation; Analytical Chemistry; Reactors; Sugar and Starch; Paper Making; Glass Manufacture; Gas; Heating and Illuminating; Cleaning Processes; Liquid Purification; Distillation; Preserving; Liquid, Gas, and Solid Separation; Gas and Liquid Contact Apparatus; Refrigeration; Concentrative Evaporators; Mineral Oils Apparatus; Misc. Physical Processes.	11-3-76
ELECTRICAL EXAMINING GROUPS	
INDUSTRIAL ELECTRONICS, PHYSICS AND RELATED ELEMENTS, GROUP 210—W. L. CARLSON, Director Generation and Utilization; General Applications; Conversion and Distribution; Heating and Related Art Conductors; Switches; Photography; Motion Pictures; Illumination; Horology; Acoustics; Recorders; Weighing Scales.	8-18-76
SPECIAL LAWS ADMINISTRATION, GROUP 220—C. D. QUARFORTH, Director Ordnance, Firearms and Ammunition; Radar, Underwater Signalling, Directional Radio, Torpedoes, Seismic Exploring, Radio-Active Batteries; Nuclear Reactors, Powder Metallurgy, Rocket Fuels; Radio-Active Material.	7-2-76
INFORMATION TRANSMISSION, STORAGE AND RETRIEVAL, GROUP 230—J. F. COUCH, Director Communications; Multiplexing Techniques; Facsimile; Data Processing, Computation and Conversion; Storage Devices and Related Arts.	1-24-77
RECEPTACLES, SANITATION AND CLEANING, WINDING, AND MEASURING, GROUP 240—N. ANSHER, Director Receptacles; Joint Packing; Conduits; Plumbing Fixtures; Textile Spinning; Food; Agitating; Cleaning; Pressing; Geometrical Instruments; Sound Recording; Winding and Reeling; Measuring and Testing; Indicating.	1-5-77
ELECTRONIC COMPONENT SYSTEMS AND DEVICES, GROUP 250—L. FORMAN, Director Semi-Conductor and Space Discharge Systems and Devices; Electronic Component Circuits; Wave Transmission Lines and Networks; Optics; Radiant Energy; Measuring.	7-9-76
DESIGNS, GROUP 290—C. D. QUARFORTH, Director Industrial Arts; Household, Personal and Fine Arts.	5-6-76
MECHANICAL EXAMINING GROUPS	
HANDLING AND TRANSPORTING MEDIA, GROUP 310—D. J. STOCKING, Director Conveyors; Hoists; Elevators; Article Handling Implements; Store Service; Sheet and Web Feeding; Dispensing; Fluid Sprinkling; Fire Extinguishers; Coin Handling; Check Controlled Apparatus; Classifying and Assorting Solids; Boats; Ships; Aeronautics; Motor and Land Vehicles and Appurtenances; Brakes; Railways and Railway Equipment.	1-28-77
MATERIAL SHAPING, ARTICLE MANUFACTURING, TOOLS, GROUP 320—S. S. MATTHEWS, Director Manufacturing Processes, Assembling, Combined Machines, Special Article Making; Metal Deforming; Sheet Metal and Wire Working; Metal Fusion—Bonding, Metal Founding; Metallurgical Apparatus: Plastics Working Apparatus; Plastic Block and Earthenware Apparatus: Machine Tools for Shaping or Dividing; Work and Tool Holders, Woodworking; Tools; Cutlery; Jacks.	4-1-77
AMUSEMENT, HUSBANDRY, PERSONAL TREATMENT, INFORMATION, GROUP 330—G. M. FORLENZA, Director Amusement and Exercising Devices; Projectors; Animal and Plant Husbandry; Butchering; Earth Working and Excavating; Fishing, etc.; Tobacco; Artificial Body Members; Dentistry; Jewelry; Surgery; Toiletry; Printing; Typewriters; Stationery; Information Dissemination.	11-8-76
HEAT, POWER, AND FLUID ENGINEERING, GROUP 340—B. R. GAY, Director Power Plants; Combustion Engines; Fluid Motors; Reaction Motors; Pumps; Rotary Engines and Pumps; Heat Generation and Exchange; Refrigeration; Ventilation; Drying; Temperature and Humidity Regulation; Machine Elements; Couplings; Gearing; Bearings; Clutches; Power Transmission; Fluid Handling and Control; Lubrication.	11-22-76
GENERAL CONSTRUCTIONS, TEXTILES AND MINING, GROUP 350—M. M. NEWMAN, Director Joints; Fasteners; Rod, Pipe and Electrical Connectors; Miscellaneous Hardware; Locks; Building Structures; Closure Operators; Bridges; Closures; Earth Engineering; Drilling; Mining; Furniture; Supports; Cabinet Structures; Centrifugal Separations; Coating; Textiles; Apparel and Shoes; Sewing Machines.	3-31-77

Expiration of patents: The patents within the range of numbers indicated below expire during November 1977, except those which may have expired earlier due to shortened terms under the provisions of Public Law 690, 79th Congress, approved August 8, 1946 (60 Stat. 940) and Public Law 619, 83rd Congress, approved August 23, 1954 (68 Stat. 764), or which may have had their terms curtailed by disclaimer under the provisions of 35 U.S.C. 253. Other patents, issued after the dates of the range of numbers indicated below, may have expired before the full term of 17 years for the same reasons, or have lapsed under the provisions of 35 U.S.C. 151.

Patents	Numbers 2,958,082 to 2,962,719, inclusive
Plant Patents	Numbers 1,978 to 1,990, inclusive

REISSUES

DECEMBER 13, 1977

Matter enclosed in heavy brackets [ ] appears in the original patent but forms no part of this reissue specification; matter printed in italics indicates additions made by reissue.

Re. 29,491

METHOD OF MAKING A CABLE-TYPE SAW

Henry A. Snow, Rindge, N.H., assignor to Helen E. Snow, Rindge, N.H.

Original No. 3,847,569, dated Nov. 12, 1974, Ser. No. 361,401, May 18, 1973. Continuation of Ser. No. 171,513, Aug. 13, 1971, abandoned. Application for reissue Sept. 17, 1976, Ser. No. 724,243

Int. Cl.² C04B *31/16*

U.S. Cl. 51—309 R **4 Claims**

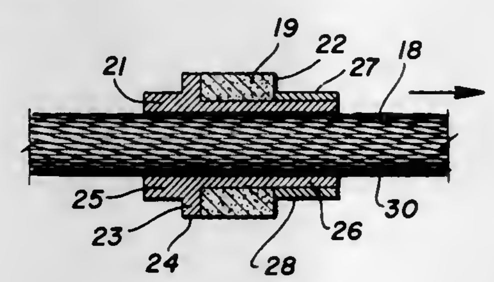

1. A method of forming a cable type saw, comprising the steps of:

a. forming a main body element of malleable metal having two axially adjacent cylindrical portions, one portion having a large diameter and the other portion having a small diameter,
b. placing the body element in a bore in a die, which bore has the same diameter as the said large diameter,
c. placing a powdered abrasive substance in the space between the surface of the bore and the portion of small diameter,
d. pressing the substance in the space axially toward the portion of large diameter, thereby causing a part of the small diameter portion to extend axially beyond the substance,
e. raising the temperature of the pressed substance to produce a solid body,
f. forming a centrally-located axially-directed bore in the body,
g. placing a piece of flexible cable through the bore in the body,
h. placing a collar concentrically over the said part of the small diameter portion, and
i. swaging the collar so that it fixedly engages the body and so that the body fixedly engages the cable.

Re. 29,492

FIXING BINDING STRIPS TO KNITWEAR ON LINKING MACHINES

Pietro Rosso, Turin, Italy, assignor to Rosso Pietro & C. S.p.A., Turin and Calzificio Fratelli Protasoni Societa' di fatto di Mario e Trento Protasoni, Gallarate (Varese), both of, Italy

Original No. 3,732,832, dated May 15, 1973, Ser. No. 114,450, Feb. 11, 1971. Application for reissue May 15, 1975, Ser. No. 577,977

Claims priority, application Italy, Feb. 17, 1970, 67521/70

Int. Cl.² D05B *7/00*

U.S. Cl. 112—25 **29 Claims**

1. A method of attaching binding strips to parts of knitted articles of wear on a linking machine, comprising:

a. providing a knitted binding strip having auxiliary longitudinal tabs (2, 3, 9, 10, 15, 16) extending from the opposite edges (4,5) of the actual strip (1) to be attached to the knitted article (7);
b. running the knitted article (7) and strip (1) onto the points (6) on the rotary dial (12) of a linking machine in such manner that the strip takes a channel shape, one at least (2, 15, 16) of said tabs being juxtaposed on the inner channel face (1a), in such manner that the marginal portion (7b) of said knitted article (7) extends a certain length within the channel;

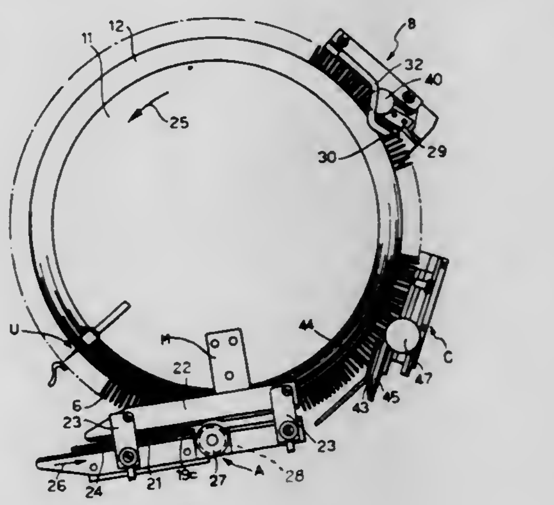

c. forming on said linking machine a chain stitch (8) joining the opposite faces of the strip (1) to the knitted article (7).

Re. 29,493

CABLE CLEANING UNITS

Desmond George Crump, Wembley Downs, Australia, assignor to Phido (Wire Services) Co., Ltd.

Original No. 3,916,925, dated Nov. 4, 1975, Ser. No. 443,325, Feb. 19, 1974. Application for reissue Aug. 9, 1976, Ser. No. 712,723

Claims priority, application Australia, Feb. 19, 1973, 2314/73

Int. Cl.² B08B *3/02*

U.S. Cl. 134—172 **5 Claims**

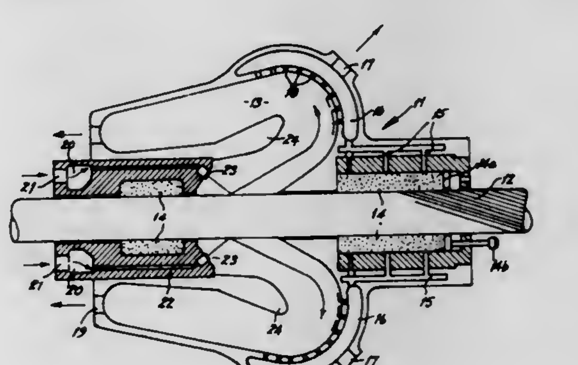

1. A cable cleaning unit comprising a chamber adapted to surround a section of the cable to be cleaned, a plurality of outlets located within the chamber through which jets of high pressure fluid are directed onto the surface of the cable, said outlets being arranged so that said jets strike the surface of the cable at an angle inclined to the longitudinal axis of the cable being cleaned and are deflected from the surface of the cable in the direction of travel of the cable cleaning unit, the portion of the chamber receiving the deflected jets being arcuate so as to direct the fluid with dirt and other matter entrained therein away from the surface of the cable, and means for withdrawing fluid from the chamber.

Re. 29,494
TRASH CONTAINER LID SYSTEM
Allan M. Hodge, 5852 Lomond Drive, San Diego, Calif. 92120
Original No. 3,836,036, dated Sept. 17, 1974, Ser. No. 330,569, Feb. 8, 1973. Application for reissue Dec. 27, 1976, Ser. No. 754,604
Int. Cl.² B65D *73/02, 85/42*
U.S. Cl. 220—334 **27 Claims**

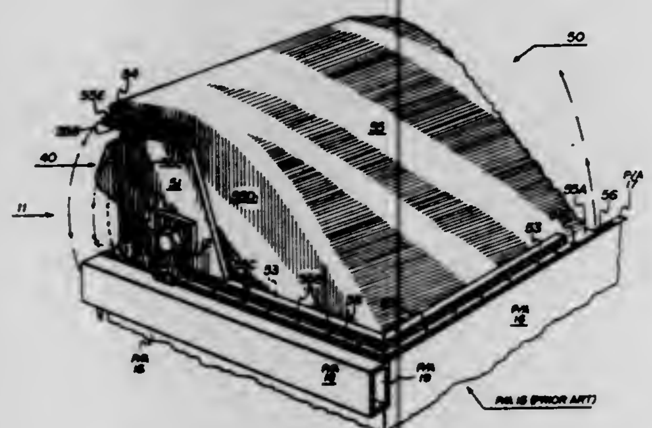

1. A trash container lid system comprising:
a lid section having a raised back portion;
a trash bin having first and second mounting members extending upwardly therefrom;
first and second pivot slots in one of said lid section and said mounting members; and
first and second axle members extending from another of said lid section and mounting members through said first and second pivot slots for rotatably and slidably coupling said lid section to said mounting members, said lid section having arcuate lower back portions on each side thereof and said pivot slots being geometrically disposed for causing said arcuate sections to frictionally engage top surfaces of said trash bin upon rotation of said lid to a partially open position.

Re. 29,495
APPARATUS AND METHOD FOR A METERING SYSTEM
Donald K. Georgi, Minneapolis, Minn., assignor to Graco Inc., Minneapolis, Minn.
Original No. 3,756,456, dated Sept. 4, 1973, Ser. No. 255,478, May 22, 1972. Application for reissue Oct. 1, 1975, Ser. No. 609,916
Int. Cl.² B67B *7/00*
U.S. Cl. 222—1 **28 Claims**

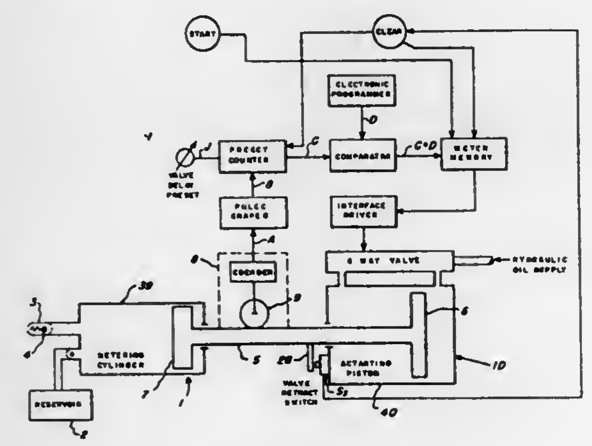

1. A fluid metering system comprising:
a positive displacement pump having a movable *and reciprocable* piston;
a high resolution sensing means for sensing piston movement during a finite time interval and sending a series of first electrical signals in response to said movement;
a preset counting means operatively associated with said sensing means to receive and count the number of first signals in said time interval and add to them a preset number of counts to obtain a total;
a comparator means for receiving and comparing the total signals in said counter means with a programmable number and emitting a second electrical signal when their values are equal; and
means to control piston movement in response to said second signal from said comparator; and
a dispensing means with a valve, operatively associated with said control means and pump for dispensing a predetermined volume of fluid in response to said control means.

PLANT PATENTS

GRANTED DECEMBER 13, 1977

Illustrations for plant patents are usually in color and therefore it is not practicable to reproduce the drawing.

4,163
PEACH TREE
Chris Floyd Zaiger, 537 Rosemore Ave., Modesto, Calif. 95351
Filed Oct. 12, 1976, Ser. No. 731,446
Int. Cl.² A01H *5/03*
U.S. Cl. Plt.—43 **1 Claim**

1. A new and distinct variety of peach tree as illustrated and described by its dwarf size, having close leaf nodes with attractive foliage, large showy flowers and is further characterized by a productive and regular bearer of medium to large, semi-freestone fruit of good eating quality.

4,164
POINSETTIA PLANT
Thormod Hegg, Reistad, Norway, assignor to Paul Ecke, Jr., Encinitas, Calif.
Filed Sept. 10, 1976, Ser. No. 722,221
Int. Cl.² A01H *5/00*
U.S. Cl. Plt.—86 **1 Claim**

1. A new and distinct variety of Poinsettia plant, substantially as herein shown and described, characterized particularly as to novelty by the unique combination of short-growing and compact plant habit, uniform and fast rooting habit, a self-branching habit resulting in the production of multiple blooms without pinching off the terminal buds, good green foliage, attractive brighter red bracts than the normal red bracts of U.S. Plant Pat. No. 2,962, "Annette Hegg", the color of the bracts being more stable and retaining its brilliance much longer when the plants are used for home decoration, and long lasting plant qualities.

4,165
BLUEGRASS PLANT
Bjarne Johan Langvad, deceased, late of Landskrona, Sweden (by Brita Langvad, administratrix), assignor to W. Weibull AB, Landskrona, Sweden
Filed Oct. 29, 1976, Ser. No. 736,884
Int. Cl.² A01H *5/12*
U.S. Cl. Plt.—88 **1 Claim**

1. A new and distinct variety of Kentucky bluegrass plant, substantially as described and illustrated, characterized particularly by very good turf performance, very attractive dark green color, good rhizome and tiller development, very large seed and good resistance to leaf spot and stripe smut.

PATENTS

GRANTED DECEMBER 13, 1976

ERRATA

For CLASS	See PATENT NO.
002–016	4,062,073
070–018	4,062,193
062–101	4,062,197
426–643	4,062,409
206–626	4,062,486
250–519	4,062,518
366–340	4,062,524
366–138	4,062,525
366–171	4,062,526
366–114	4,062,527
172–009	4,062,539
351–160	4,062,627
351–169	4,062,629
364–105	4,062,648
051–281 R	4,062,658
051–281 R	4,062,659
260–514 D	4,062,783
560–021	4,062,886
560–185	4,062,887
235–474	4,063,070
364–431	4,063,072
364–414	4,063,074
364–119	4,063,075
364–472	4,063,076
364–502	4,063,077
364–700	4,063,078
362–290	4,063,079
235–312	4,063,081
364–728	4,063,082
363–040	4,063,143
363–043	4,063,144
363–071	4,063,145
333–030 R	4,063,198
364–900	4,063,221
364–126	4,063,222
365–116	4,063,223
364–189	4,063,224
365–156	4,063,225
365–125	4,063,226

PATENTS

GRANTED DECEMBER 13, 1977

GENERAL AND MECHANICAL

4,062,062
MULTI-STYLE GARMENT
Lydia Silvestry Basaldua, London, England, assignor to Lydia Design Ltd., New York, N.Y.
Filed Aug. 23, 1976, Ser. No. 716,474
Int. Cl.² A41D *1/22*
U.S. Cl. 2—105 **17 Claims**

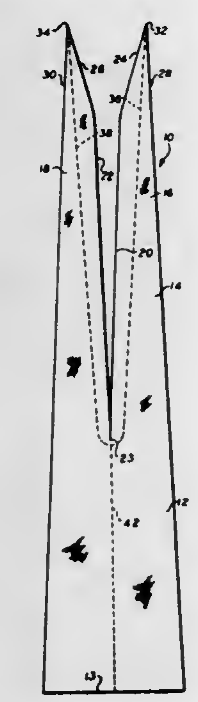

1. A garment capable of being worn in a plurality of different styles comprising:
   a lower tubular portion having side edges when viewed in elevation, said tubular portion being adapted to surround portions of the body of the wearer, and a pair of opposed scarves extending upwardly from said tubular portion,
   each one of said pair of scarves having a lower end connected to said tubular portion and an upper free end opposite said lower end which is adapted to be positioned in one of a plurality of different locations depending upon the style of wear of said garment,
   said pair of scarves forming an extension of said lower tubular portion and being adapted to be wrapped about portions of the body of the wearer,
   said scarves having respective side edges when viewed in elevation, opposed front edges and opposed rear edges,
   said opposed front edges of said scarves tapering upwardly and outwardly,
   and said rear edges of said scarves tapering upwardly and outwardly.

4,062,063
CAP COVER CONNECTORS
Bernard Bloom, Chicago, and Benjamin Lev, Skokie, both of Ill., assignors to Midway Cap Company, Chicago, Ill.
Continuation of Ser. No. 304,191, Nov. 6, 1972, abandoned, which is a continuation-in-part of Ser. No. 173,828, Aug. 23, 1971, abandoned. This application Feb. 24, 1975, Ser. No. 551,981
Int. Cl.² A42C *5/00*
U.S. Cl. 2—187 **3 Claims**

3. A cap construction comprising: means defining a cap frame; means defining a cap cover adapted to be secured to said frame; means for securing said cover to said frame comprising a plurality of first elements on said cover and a plurality of second elements on said frame, corresponding ones of said first and second elements being constructed to cooperate with each other to secure said cover to said frame; and means on at least one of said cap and said frame mounting at least some of said first and second elements, respectively, for movement along the periphery of said cover and said frame, respectively, toward and away from adjoining cooperating elements whereby misalignment between said first and second elements may be selectively corrected to insure proper registry of said cover with respect to said frame when the two are secured together; the movable ones of said elements comprising male snap connectors having an enlarged base and a lesser protuber-

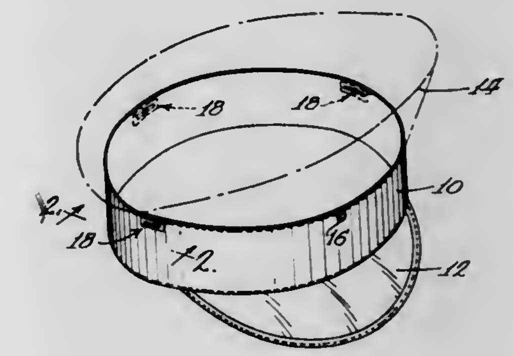

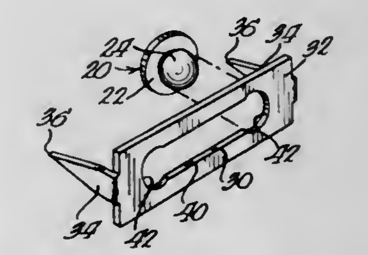

ance extending therefrom, said mounting means comprising a plurality of elongated slots in said frame, each respectively receiving the protuberance of a male snap connector and a further male snap connector immovably affixed to said frame, the remainder of said male snap connectors all being mounted for movement in respective ones of said elongated slots.

4,062,064
EYEGLASS POCKET SHIRT
Walter Vosatka, 1047 E. 216 St., c/o Scarbrough, Bronx, N.Y. 10469
Filed Jan. 17, 1977, Ser. No. 759,737
Int. Cl.² A41D *27/20*
U.S. Cl. 2—252 **1 Claim**

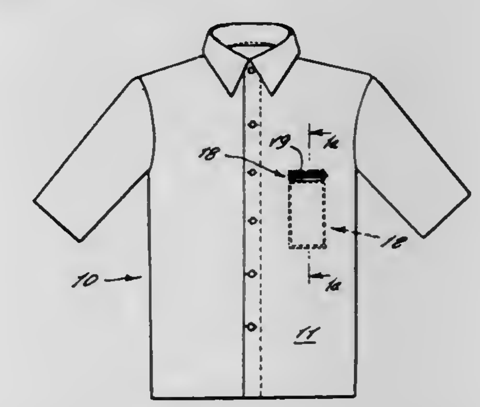

1. An eyeglass pocket shirt, comprising in combination, a shirt garment having a front panel with a horizontal slit, a slide fastener unit stitched to opposite side edges of said slit selectively closing said slit, and a depending pocket attached to a rear side of said panel communicating with said slit, said pocket being elongated in shape to completely receive a pair of eyeglasses; said pocket comprising front and rear walls peripherally stitched together all around, a horizontal slit on said front wall being aligned with said shirt front panel slit, upper edges

of both said slits being stitched together and lower edges of both said slits being stitched together, an upper end of said pocket extending higher than said slits, and means to retain said eyeglasses in said upper end comprising a horizontal tape stitched along its lower edge to a vertically intermediate portion of said rear wall, said tape forming a shallow inner pocket within an interior of said pocket and which is positioned at a higher elevation than a lower end of said pocket.

4,062,065
SAFETY SHOULDER STRAP HOLDER
Irving Gardner, P.O. Box 294, Hunter, N.Y. 12442
Filed Mar. 25, 1977, Ser. No. 781,288
Int. Cl.² A61J *19/00*
U.S. Cl. 2—271 **5 Claims**

1. A shoulder strap holder comprising:
a. a body member;
b. attachment means on said body member for securing said body member to garment material; and
c. a strap receiving member of elongated substantially U-shape comprising:
i. first and second spaced opposed arms cojourned at one end,
ii. hinge means securing the strap receiving member adjacent the cojoined ends of its arms to the body member, and
iii. releasable gripping means on one of said arms for normally holding the strap receiving member fixed in relation to said body member and for disconnecting under high load to allow the strap supporting member to pivot on said body member about said hinge means.

4,062,066
APPAREL BELT WITH CONCEALED POCKET
Adolph D. Weiss, Fort Worth, Tex., assignor to Hickok Manufacturing Co., Inc., Arlington, Tex.
Filed Oct. 15, 1976, Ser. No. 732,584
Int. Cl.² A41F *9/00*
U.S. Cl. 2—322 **4 Claims**

1. An improved apparel belt having inner and outer plies extending the length of the belt, and a doubled-back portion of the inner and outer plies at one end, defining a loop for retaining a buckle, the improvement comprising:
the inner ply having a slit near the doubled-back portion to provide access to the space between the inner and outer plies for placing articles; the slit not lying in a single plane, with the portion within the bounds of the slit defining a flap; and

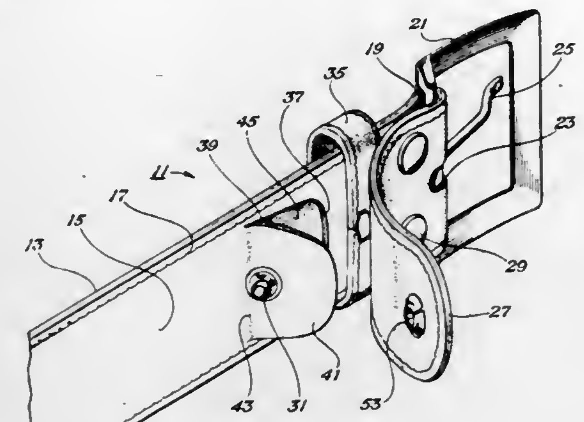

fastening means for releasably fastening the doubled-back portion to the flap for selectively closing and providing access to the space between the inner and outer plies.

4,062,067
PROTECTIVE HEADGEAR
Harry A. Franzen, 2907 W. 33rd, Apt. D, Anchorage, Alaska 99503
Filed Aug. 3, 1976, Ser. No. 711,277
Int. Cl.² A42B *1/06*
U.S. Cl. 2—410 **3 Claims**

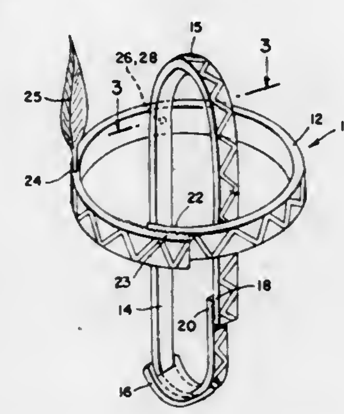

1. A protective headgear comprising a pair of bands, one of said pair of bands having two free ends, the other of said pair of bands, having two free ends, fastening means for fastening together each of said two free ends of said one band to each other, said fastening means for fastening said two free ends of said other band to each other, said fastening means for fastening said free ends in overlying relationship to one another at an infinite variety of locations along a portion of the length of each of said pair of bands adjacent one of the free ends of each band, said fastening means including a plurality of multiple loop fasteners being disposed on one lateral surface adjacent one free end of each band and a plurality of multiple hook fasteners being disposed on the other lateral surface of each band adjacent the other free end thereof, said one band having at least a pair of openings disposed in said one lateral surface thereof, said other band having at least a pair of snap fasteners fixedly secured to said other lateral surface, said pair of snap fasteners for removable snapping engagement within said pair of openings, at least one hole disposed in a marginal edge extending intermediate said lateral surfaces of said one band, said first and said second bands fabricated from an impact absorbing material, said free ends of said other band being disposed in a location intermediate said at least said pair of snap fasteners and closest one of said pair of snap fasteners.

4,062,068
CHIN STRAP FOR PROTECTIVE HEADGEAR
Stanley Davenport, Knoxville, Tenn., and Frank K. Villari, Oak Park, Ill., assignors to The Kendall Company, Boston, Mass. Division of Ser. No. 734,209, Oct. 20, 1976. This application Mar. 25, 1977, Ser. No. 781,406
Int. Cl.² A42B *7/00*
U.S. Cl. 2—421 **3 Claims**

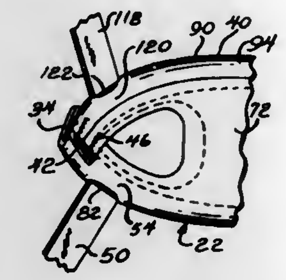

1. A chin strap for a protective headgear, comprising:
first and second straps having approximately equal lengths and opposed ends of the first strap connected to opposed ends of the second strap at spaced first and second points, with said first and second straps being spaced from each other intermediate the first and second connecting points;
third and fourth straps having one end connected to the first strap intermediate the first and second connecting points, said third strap being connected to the first strap at a third point adjacent the first point and said fourth strap being connected to the first strap at a fourth point adjacent the second point, said third and fourth straps having means for attaching other end portions of the straps to the headgear;
fifth and sixth straps having one end connected to the second strap intermediate the first and second connecting points, said fifth strap being connected to the second strap at a fifth point adjacent the first point and said sixth strap being connected to the second strap at a sixth point adjacent the second point, said fifth and sixth straps having means for attaching other end portions of the straps to the headgear; and
a chin cup extending between the spaced portions of the first and second straps.

4,062,069
BACKREST FOR BEDPANS
Phyllis Johnson, 189-12 Mangin Ave., Queens, N.Y. 11412
Filed May 11, 1976, Ser. No. 685,403
Int. Cl.² A47K *17/00;* **A61G** *9/00*
U.S. Cl. 4—1 **2 Claims**

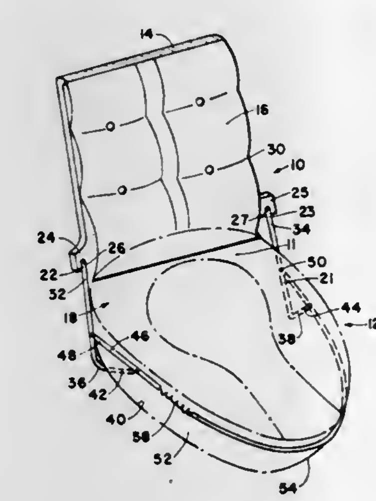

1. A backrest for bedpans comprising a rigid plate, affixing means for removably affixing said plate adjacent the rear portion of a bedpan, said plate thereby serving as a backrest when said bedpan is used in an independent horizontal supporting surface, said affixing means comprises a pair of substantially L-shaped brackets, each fixedly secured on a free end thereof to opposed sides of said plate, the other free ends of each of said substantially L-shaped brackets engaging the lowermost surface of said bedpan, a securing strap affixed on each end thereof to one of said L-shaped brackets adjacent the bend of said brackets, securing strap circumscribing the side and front walls of said bedpan.

4,062,070
TOILET URINE DEFLECTOR
Paul R. Prince, 15960 Maidstone St., Fountain Valley, Calif. 92708
Filed Oct. 1, 1976, Ser. No. 728,874
Int. Cl.² E03D *11/00*
U.S. Cl. 4—1 **5 Claims**

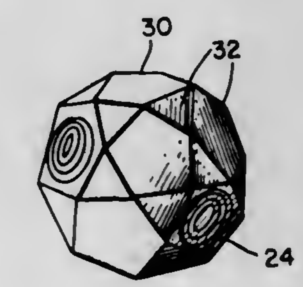

3. A urine receiving system for reduced noise and splash, comprising:
a flushable toilet bowl with water and a drain of predetermined size;
a floating and unrestrained deflector for dispersing urine quietly into the water of said toilet bowl, said deflector having a size selected to inhibit entrapment in said drain during flushing, and coated to provide a substantially non-stick surface, said deflector comprising a multifaceted object having at least twelve sides to produce a water wheel and water paddle effect to cause said deflector to track and follow said urine stream.

4,062,071
CLOSET SEAT FITTED WITH A VALVE CONTROLLED DOUCHE
Georg V. Blanquet, Baden-Baden, Germany, assignor to Gaggenau- Werke, Haus- und Lufttechnik GmbH, Gaggenau, Germany
Filed June 7, 1976, Ser. No. 693,924
Claims priority, application Germany, June 14, 1975, 2526736
Int. Cl.² E03D *9/08;* **F24H** *1/18*
U.S. Cl. 4—7 **4 Claims**

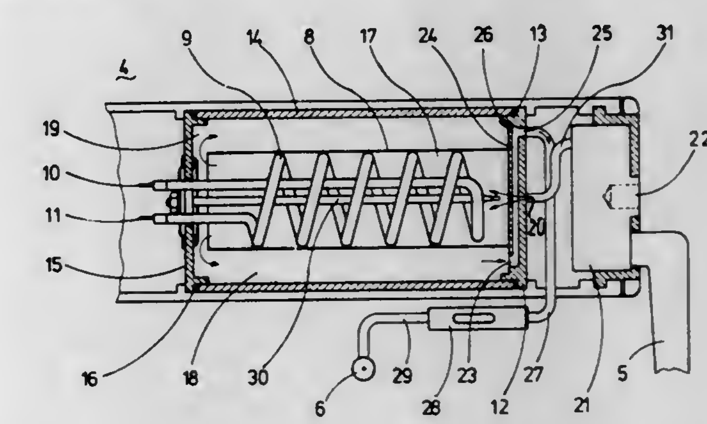

1. A device including a water closet seat having a rear end and being fitted with a valve controlled douche, said device comprising:
a hollow rearward extension integrally connected to the rear end of the seat;
at least one spray head fitted to the seat beneath said rear end thereof;
a heater chamber contained within said hollow rearward extension of the seat;
a length of metallic tubing contained within said hollow

rearward estension of the seat and defining on the inside thereof said heater chamber;
a flange closing one axial end of said length of metallic tubing;
a cold water inlet extending through said flange axially of said length of metallic tubing;
a cylindrically helically coiled electric heater element contained within said length of metallic tubing in intimate contact therewith;
a thermostatic sensor for controlling said cylindrically helically coiled electric heating element to heat water in said heater chamber, said thermostatic sensor being contained within said heater chamber;
a reservoir chamber contained within said hollow rearward extension of the seat and surrounding said heater chamber, the capacity of said reservoir chamber being greater than the capacity of said heater chamber;
a communication passage for water to pass from said heater chamber to said reservoir chamber, said communication passage being disposed at the end of said length of metallic tubing opposite to said flange;
a reservoir jacket of thermally insulating plastics material contained within said hollow rearward extension of the seat and defining on the inside thereof said reservoir chamber, said reservoir jacket being in sealing contact with said flange;
a cover plate closing the end of said reservoir jacket at the end thereof opposite said flange;
a heated water outlet from said reservoir chamber positioned at a low level in said flange, cold water entering said heater chamber from said cold water inlet flowing in a direction countercurrent to the direction of flow of heated water which leaves said reservoir chamber from said heater water outlet, the heated water leaving said reservoir chamber leaving from a point therein whereat the water temperature is lowest;
a riser extending from said heated water outlet through said flange;
an air vent in said riser;
an outlet duct extending from said riser to said spray head for conveying heated water to said spray head; and
a non-return valve disposed in said outlet duct.

4,062,072
PORTABLE BIDETS
Arthur Bruce Roberts, 37 Calver Road N. W., Calgary, Alberta, Canada
Filed Aug. 2, 1976, Ser. No. 710,879
Claims priority, application Canada, Dec. 11, 1975, 241564
Int. Cl.² A47K *11/08, 3/22*
U.S. Cl. 4—7 **19 Claims**

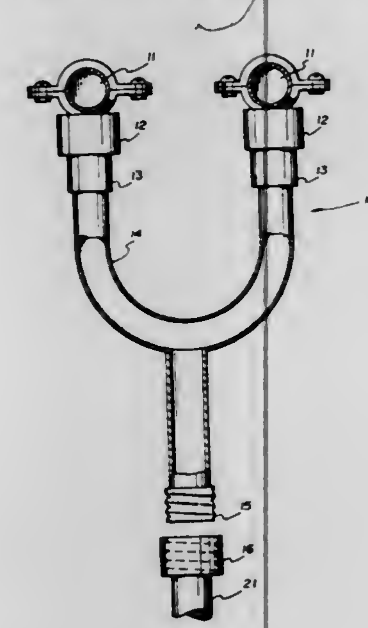

1. A portable bidet comprising:
a. adaptor means facilitating the interconnection of said bidet with a source of water under pressure;
b. a water discharge tube and nozzle mounted to permit movement from an inoperative position substantially beneath the internal rim of a toilet bowl to a predetermined operative position wherein said nozzle lies substantially centrally of said bowl;
c. valve means for variably controlling the flow of water to said discharge tube and nozzle, and;
d. manually operable lever means pivotally mounted adjacent said bowl including first actuator means for moving said discharge tube and nozzle from an inoperative position to said operative position and second actuator means for said valve means whereby initial movement of said lever means affects movement of said discharge tube and nozzle to said operative position, and continued movement of said lever means in the same direction affects gradual opening of said valve means without causing further displacement of said discharge tube and nozzle from said operating position.

4,062,073
PROTECTIVE DEVICE FOR THE ARM AND HAND USEFUL IN OPERATING AN OPEN VEHICLE
Jhoon Goo Rhee, 2525 N. Ridgeview Road, Arlington, Va. 22207
Filed Feb. 28, 1975, Ser. No. 554,081
Int. Cl.² A41D *13/08*
U.S. Cl. 2—16 **5 Claims**

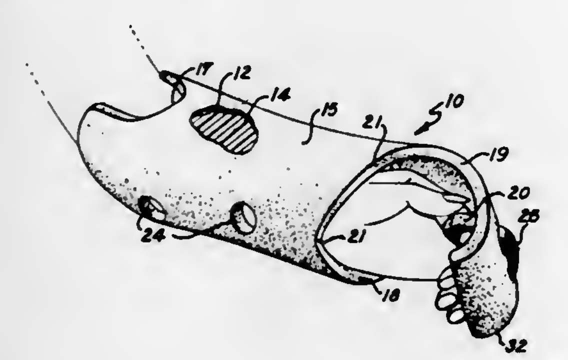

1. A flexible, unitarily molded, protective device for wearing on and protecting the arm and hand of a driver of an open vehicle comprising casing means having resilient foam means disposed therein and having a generally tubular configuration open at both ends and adapted to extend between the elbow and hand of the wearer, one open elbow end comprising contoured portions adapted to cradle the wearer's elbow and to permit movement of the upper part of the wearer's arm therein and to accommodate bending of the elbow, the second open hand end comprising a contoured portion adapted to permit movement of the wrist of the wearer, a flat extension of said second open end normally angled substantially inwardly and terminating in a inwardly extending portion, said extension adapted to cover the back of the hand and curved fingers of the wearer, with the sides of the hand left uncovered a plane through said elbow portion bisecting said contoured portions thereof being disposed at about a 90° angle with respect to a plane through said open hand end bisecting said contoured portion thereof and said flat extension, and securing means disposed in said flat extension for retaining said device on said fingers whereby the wearer's fingers can hold the device in position with the wearer's thumb being unattached.

4,062,074
BED HAVING A MOVABLE MATTRESS SUPPORTING PLATFORM
John Anthony Holland, Belmont, Australia, assignor to Avion Australia Pty. Ltd., Osborne Park, Australia
Filed Aug. 1, 1975, Ser. No. 600,971
Claims priority, application Australia, Aug. 2, 1974, 8390/74; Aug. 23, 1974, 8640/74; Nov. 7, 1974, 75146/74
Int. Cl.² A61G *07/10*
U.S. Cl. 5—63 **9 Claims**

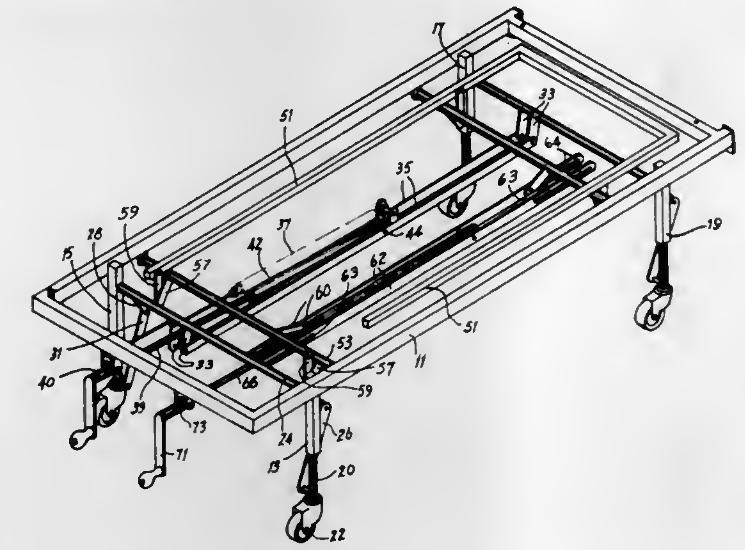

1. A bed comprising a mattress-supporting platform, a base for supporting said platform, means for mounting said platform on said base, said base comprising a horizontal rectangular frame extending beyond the perimeter of said platform for supporting accessories, legs mounted on said frame on the underneath thereof, the mounting means between said base and said platform including a plurality of first transverse operating shafts pivotably mounted on said frame, at least one arm radially extending from each shaft, at least on link connecting said arm to said platform so that when a turning force is applied to said first transverse operating shaft a portion of said platform to which the associated link is attached is selectively raised or lowered, and wherein said platform is intended, when horizontal, to lie closely adjacent said frame and when inclined to be inclined upwardly at one end from said frame, two pairs of said legs being mounted on said frame, the lower end of each leg being provided with an extendable portion so that the height of legs and thereby the height of said frame above the ground may be varied, a second transverse operating shaft associated with each pair of legs, each second transverse shaft being rotatably mounted at least adjacent one associated pair of legs, and means coupling said second transverse shafts and the respective pairs of associated legs for adjusting the height of the legs by rotation of said second transverse shafts to raise and lower said frame.

4,062,075
BED ARRANGEMENT
Robert G. Stern, St. Louis, and Larry D. Mitchell, Manchester, both of Mo., assignors to Affiliated Hospital Products, Inc., St. Louis, Mo.
Division of Ser. No. 389,983, Aug. 20, 1973, Pat. No. 3,972,081, and a continuation-in-part of Ser. No. 499,082, Aug. 20, 1974, abandoned. This application July 23, 1976, Ser. No. 708,126
Int. Cl.² A61G *7/10*
U.S. Cl. 5—63 **37 Claims**

1. A height adjustable bed comprising
a base,
a vertically adjustable support frame vertically adjustable relative to said base,
pivoted lifting arms pivotally connecting between said base and said vertically adjustable support frame,
force application means for applying a lifting-movement-effecting torque to said pivoted lifting arms,
said force application means having a power input zone,
said force application means for applying a lifting-movement-effecting torque including intermediate torque compensation means in powertransmitting relation between

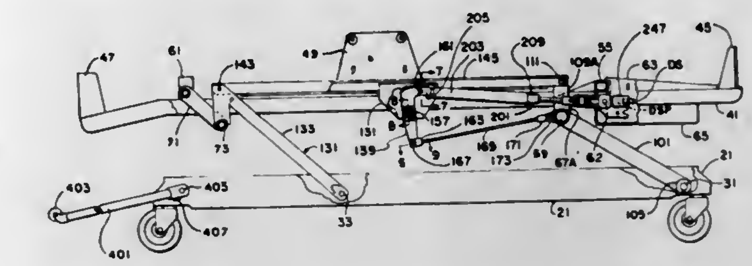

said power input zone and said lifting arms for automatically applying a greater torque to said lifting arms in a lowered position than in a raised position of said lifting arms, for a given input power or torque applied at said power input zone.

4,062,076
READER'S BLANKET
Diane C. Albertson, 5138 Vera Lane, San Jose, Calif. 95111
Filed Apr. 12, 1976, Ser. No. 675,828
Int. Cl.² A47B *23/00*
U.S. Cl. 5—334 R **2 Claims**

1. A non-restraining bedclothes cover adapted to be loosely draped over a bed for at least partially covering a person disposed thereon;
said cover having a generally rectangular configuration including one edge defining a head end thereof for placing at the head end of a bed,
a pair of spaced apart arcuate slits extending through said cover adjacent said head end for receiving the hands and a portion of the arms extending therethrough of a person disposed thereunder and, said openings spaced from said edge sufficient at least to provide sufficient blanket therebetween for extending up to and covering the neck and shoulders by said person to be covered by said bedclothes cover when the person is in a sitting position and the hands are in a position for holding a book for reading, said arcuate slits being defined by first and second arcuate edges, one of said edges overlapping the other of said edges defining a flap for closing said slits, and
means depicting a pictoral illustration of the head of at least one object taken from the group of persons, characters, and animals and said flaps define the eyelids of said one object.

4,062,077
WATERBED MATTRESS CONSTRUCTION
Robert C. Autrey, San Jose, and John W. Connolly, Pleasanton, both of Calif., assignors to Aqua Gard International, Inc., San Jose, Calif.
Filed Jan. 14, 1977, Ser. No. 759,381
Int. Cl.² A47C *27/08*
U.S. Cl. 5—365 **17 Claims**

1. In a mattress construction: a water mattress comprising a

flexible bladder for holding a body of water, a rigid circumscribing framework defining a cavity for the mattress and providing lateral support of the body of water in the mattress, and an outer shell overlying the framework and cavity, said

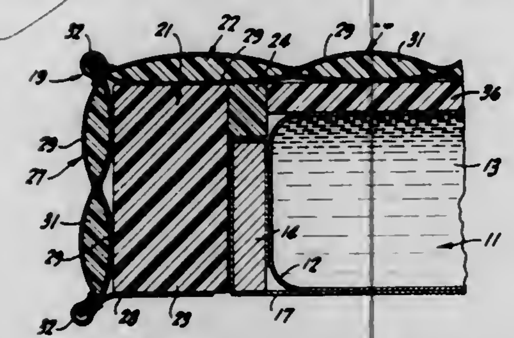

outer shell comprising a cushion of resilient padding extending along the top and outer sides of the framework and a flexible cover secured to the cushion and overlying the cavity and the top and outer sides of the cushion.

4,062,078
HAND DRILL AND ADAPTER TOOL
John J. Brutschy, P.O. Box 1345 Old Bridge Road, Sag Harbor, N.Y. 11963
Filed July 8, 1976, Ser. No. 703,351
Int. Cl.² B25F *1/02*
U.S. Cl. 7—1 R **4 Claims**

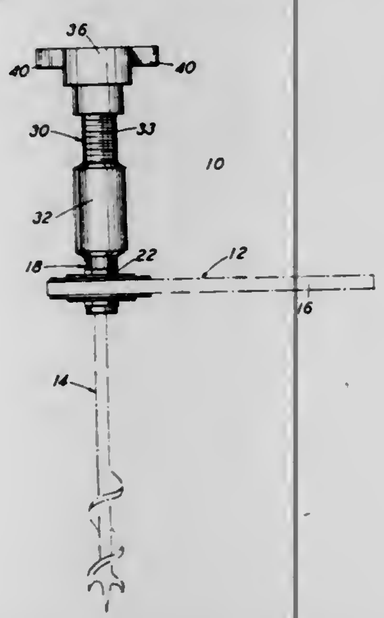

1. A hand drill and adapter tool for use with hole boring accessories having tapered shanks and comprising in combination:
a hollow elongated adaptor body threaded internally at one end thereof and having a tapered socket at the other end thereof, said socket taper diverging towards said other end of the tool, a section of the external surface of said adapter body being polygonally configured to receive thereon standard wrenches and ratchets;
a stud member thread to threadedly engage the threaded portion of said adapter body and thereby serve as a feed screw for a hole boring accessory securable within said adapter body socket;
a spring-loadable center punch integral with one end of said stud member;
a cap member positionable non-rotatably and removably selectively on said one end of said stud member or in like fashion on said socket to thereby alternatively enclose said center punch and provide an impact-receiving end face therefor or expose said center punch and provide an impact-receiving end face for said socket portion of the adapter body, a pair of diametrically opposed handle elements projecting outwardly from and integral with said cap;
and means for releasably locking a hole boring accessory non-rotatably within said tapered socket.

4,062,079
INFLATABLE BODY SUIT
Cyril S. Potter, 82 Cleveland St., Orange, N.J. 07050
Filed Aug. 11, 1975, Ser. No. 603,653
Int. Cl.² B63C *9/12*
U.S. Cl. 9—332 **3 Claims**

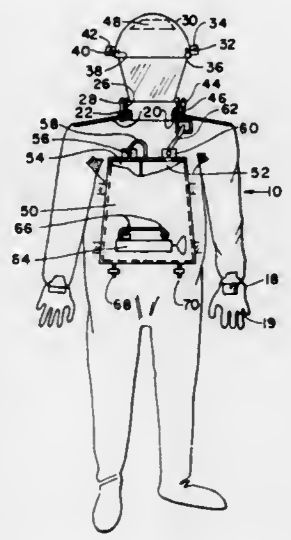

1. An inflatable body suit comprising suit means in the shape of a union suit having a first layer positionable against the body of a wearer and a second outer layer positioned over said first layer said first layer and said second layer defining an air pocket between them extending over the full area of said suit, said air pocket terminating at opening seam means, said opening seam means being of sufficient length to allow a wearer to put on and take off said suit, water-tight openable and closable sealing means extending across said opening seam means, chest mounted compressed air reservoir means operatively connected to said air pocket through first valved connector means for injecting air into said air pocket, said air reservoir means being divided into at least two compartment means, each compartment means having sufficient compressed air capacity to fill said air pocket, each of said compartment means being operatively connected to one another through second valved connector means, valve means on each said compartment means for filling and discharging the air from each said compartment means, helmet means, air pump means operatively connected to each of said compartment means for pumping air into each of said compartment means, collar means extending upwardly from neck opening means on said suit for receiving said helmet means, sealing means for removably sealing said helmet means to said collar means, one-way inlet valve means and one-way exhaust valve means mounted in said helmet means for allowing the wearer of said suit to inhale and exhale air surrounding the suit.

4,062,080
FEEDING DEVICE FOR HIGH SPEED NUT FORMERS
Yuan Ho Lee, 85, Gen Ho Road, Tainan, China /Taiwan
Filed Nov. 9, 1976, Ser. No. 739,869
The portion of the term of this patent subsequent to Apr. 19, 1994, has been disclaimed.
Int. Cl.² B21D *53/24*
U.S. Cl. 10—76 T **4 Claims**

1. A blank transferring device for a high speed nut forming machine having a machine body on which a plurality of dies having central cavities for receiving blanks are mounted along a straight line defined by the respective center points of said dies comprising:
a manipulating mechanism provided on said machine body and adapted to provide advancing motion along a straight line and returning motion along an arched path;
a guide plate provided on said machine body along a line

defined by the respective lowest points of said cavities of the dies;
a resilient pressure plate provided on said guide plate and extending a suitable distance beyond the line defined by the respective lowest points of said cavities of the dies, said pressure plate cooperating with the face of the machine body on which the plurality of dies are mounted to define a feed path;
a transfer mechanism having a sliding plate suitably supported by at least one guide rail and a plurality of juxtapositioned spring mounted tabs disposed on said sliding plate, each tab having an indentation of a suitable shape to hold and convey blanks positioned along the feeding path

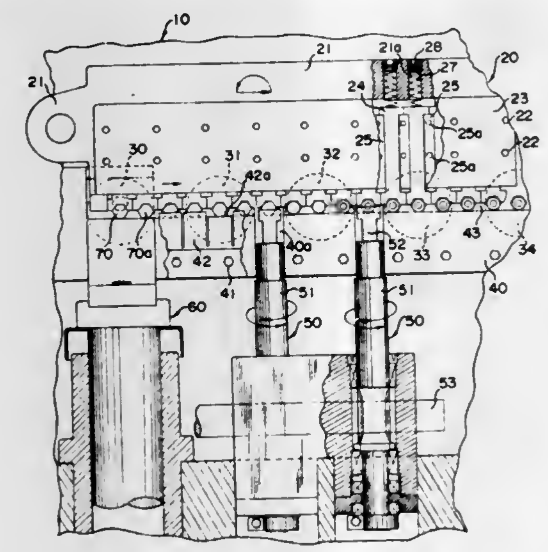

between the pressure plate and said face of the machine body, the distance between the centers of the indentations of adjacent tabs being a suitable fraction of the distance between two successive dies, the transfer mechanism being operatively connected to the manipulating mechanism and adapted to have the tabs thereof movably and removably positioned in the feed path;
thereby to successively hold, convey, and release blanks in said feed path due to alternating advancing straight line and returning arched path motions provided by the manipulating mechanism so that blanks are moved along said feed path in a plurality of discrete steps from one die to the next successive die.

4,062,081
TRANSPORTABLE BRIDGE AND METHOD
James L. Ramer, Rte. 1 Box 155, Sullivan, Mo. 63080
Filed Oct. 13, 1976, Ser. No. 731,953
Int. Cl.² E01D *15/12*
U.S. Cl. 14—1 **43 Claims**

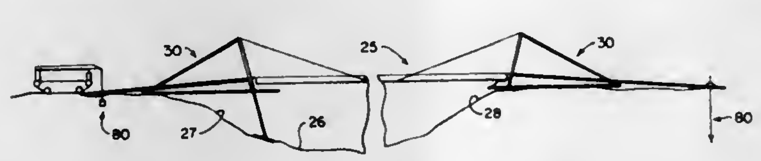

41. A method of erecting a bridge across a depression, comprising:
a. providing a bridge abutment comprising elements pivotally joined to a base to provide a low collapsed height for transport, and a greater erected height for use;
b. transporting a said abutment in collapsed condition to an abutment site on one bank;
c. erecting said abutment;
d. anchoring said abutment to said site;
e. providing a plurality of deck units of generally flat, rectangular shape, having end-to-end couplers and dimensioned to pass axially through said abutment;
f. connecting said deck units in end-to-end relationship;
g. attaching cables to said abutment and at least one of said deck units for supporting said deck units; and
h. passing said deck units through said abutment from said abutment site across said depression so that the leading deck unit engages the opposite bank.

4,062,082
UNDERCOUNTER POTS AND PANS WASHER
Charles M. Azzopardi, 1039 Victory Blvd., Staten Island, N.Y. 10301
Filed June 21, 1976, Ser. No. 698,158
Int. Cl.² A46B *13/02*
U.S. Cl. 15—28 **2 Claims**

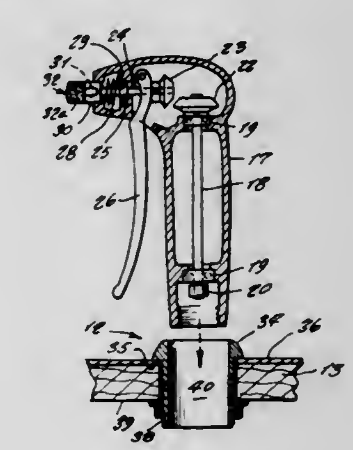

1. A pots and pans scrubbing appliance, comprising in combination, a hand-held unit removably seated in a receptacle mounted through a countertop of a kitchen sink cabinet, a flexible shaft having one end connected to said unit, an electric motor mounted within an interior of said cabinet, an opposite end of said flexible shaft being attached to said motor; said unit including a case supporting therewithin a first shaft in bearings, one end of said first shaft being connected to said flexible shaft and an opposite end of said first shaft having a first gear secured thereupon, a second shaft in said case and slidably supported in bearings and being at an angle respective to said first shaft, one end of said second shaft having a gear secured thereupon, an opposite end of said second shaft having a collar secured thereto, said collar protruding outwardly of said case and having a chuck opening in an outward end thereof engaging selectively one of a plurality of brushes, a lever pivoted at one end inside said case and having a handle portion at an opposite end extending outwardly of said case, an intermediate portion of said lever bearing against an end of said second gear urging said second shaft to axially slide and said first and second gears to engage, and a compression spring between a shoulder of a partition inside said case and said collar normally urging said second shaft to axially slide in an opposite direction and disengage said gears.

4,062,083
LINEAL SLIDE RETRACTABLE GROOMING BRUSH
Nicholas D. McKay, Grand Blanc, Mich., assignor to Helmac Products Corporation, Flint, Mich.
Filed Oct. 21, 1976, Ser. No. 734,620
Int. Cl.² A46B *15/00, 17/04;* **A47L** *25/08*
U.S. Cl. 15—106 **5 Claims**

1. In a lineal slide retractable brush, the combination comprising:
a substantially rectangular brush housing, said brush housing provided with an elongate slide actuator control peg access slot along each side thereof, said brush housing provided with a plurality of bristle openings in the base thereof;
a substantially rectangular bristle brush back plate member provided within said housing, said bristle brush back plate member having a plurality of downwardly extending bristles in register with said bristle openings, said bristle

brush back plate member provided with cam follower pins extending from each side thereof; and

a substantially U-shaped slide actuator slidably mounted within said housing so as to straddle said bristle brush back plate member, said slide actuator provided with inclined cam grooves on the inside surface of each of the side walls thereof which are adapted to operatively engage said cam

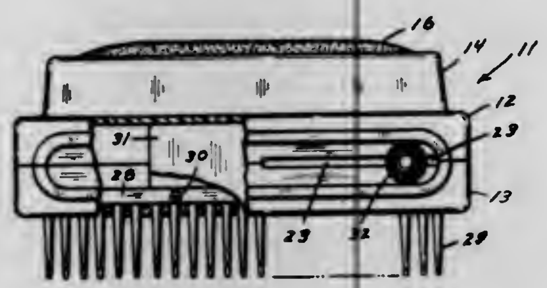

follower pins of said bristle brush back plate member, said slide actuator provided with control pegs which extend outwardly through said access slots of said housing so as to permit selective lineal movement of said slide actuator to raise and lower said bristle brush back plate member so as to selectively extend and retract said bristles through said bristle openings.

4,062,084
PAINT BRUSH BRIDLE ATTACHMENT
Donald E. DuBois, Rte. 28, Ashokan, N.Y. 12481
Filed July 8, 1976, Ser. No. 703,449
Int. Cl.² A46B *9/10*
U.S. Cl. 15—169 **5 Claims**

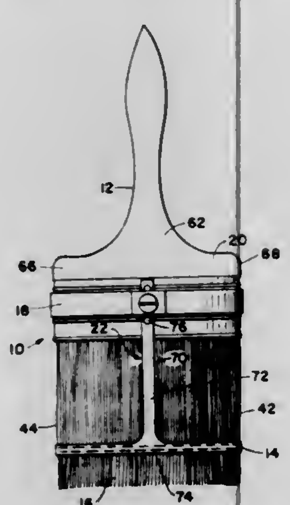

1. A paint brush bridle attachment device adapted to be removably received on a paint brush, which comprises:

a. a bridle section adapted to be removably received on the bristles of said paint brush including a U-shaped element having a pair of legs joined by a base, a hook shaped portion integrally joined to an outer end of one of said legs, said hook shaped portion frictionally engaging the other of said legs;

b. a retaining band adapted to be removably received on a head of said paint brush, said retaining band including a pair of sides joined together at their ends by U-shaped portions;

c. an elongated band member, said elongated band member being a T-shaped element having a cross bar section and a stem;

d. means for removably mounting said band member on said bridle section and

e. means for adjustably securing said band member to said retaining band, one said side having a raised boss thereon, an inner surface of said one side of said pair of surfaces having a slotted channel therein, said boss having a hole therethrough, said hole communicating with said channel, said stem at an outer end having a row of longitudinally aligned apertures therethrough.

4,062,085
SUCTION CLEANING APPARATUS
Ian James Duncan, Ely, England, assignor to Melford Engineering Limited, Ely, England
Filed Oct. 3, 1975, Ser. No. 619,509
Int. Cl.² A47L *11/29;* **E01H** *1/08*
U.S. Cl. 15—339 **10 Claims**

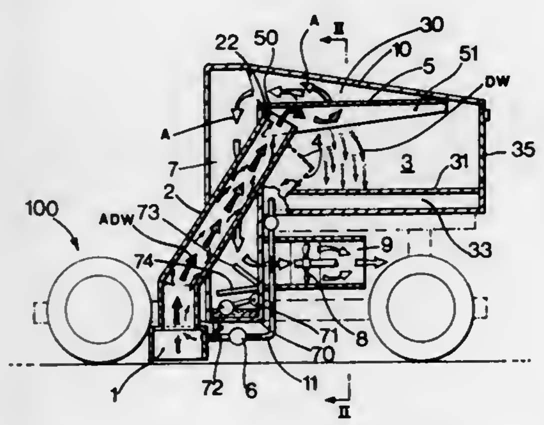

1. Suction cleaning apparatus comprising a closed chamber for receiving dust and similar matter together with liquid such as water intermingled therewith;

a suction duct having an outlet end communicating with the chamber and having an inlet end arranged to be positioned in close proximity with a surface to be cleaned in order to take up dust and similar matter therefrom;

filter means in the chamber for separating liquid from dust and similar matter;

suction means in communication with the chamber for drawing air therefrom thereby creating suction in said duct;

passageway means communicating between the suction means and the chamber, the suction means communicating with the passageway means at substantially a right angle and the passageway means being downwardly directed from the chamber and of large bore for effecting separation by inertia of any residual liquid from the air as the latter is drawn by the suction means via the passageway means from the chamber;

a trap located at a lower part of the passageway means, the trap for receiving an residual liquid separated from air drawn down the passageway means and containing float operated means for effecting indication of an excess quantity of residual liquid drawn with the air into the passageway means and hence an indication that the chamber may be full of dust and similar matter; and,

and return flow means for passing liquid from the chamber after separation by the filter means into the suction duct in order to introduce liquid therein essentially for the purpose of intermingling with dust and similar matter drawn by suction into the duct whereby on discharge from the outlet end of the duct into the chamber the liquid laden with dust and similar matter separates by reduction in velocity from the air, the air passing to the suction means while the liquid intermingled with dust and similar matter remains in the chamber.

4,062,086
SEALLESS STRAP END ALIGNMENT AND CONNECTION MEANS
Edward P. Wojcik, Niles, Ill., assignor to Signode Corporation, Glenview, Ill.
Filed Apr. 26, 1976, Ser. No. 680,165
Int. Cl.² B65D *63/02*
U.S. Cl. 24—20 EE **6 Claims**

1. A sealless strap connection between overlapped lengths of strap which comprises an array of longitudinally spaced joints,

each joint comprising lengthwise protuberances presenting opposed non-interlocking shoulders displaced from the respective planes of said overlapped lengths of strap and lengthwise protuberances presenting opposed interlocking overlapping shoulders displaced from the respective planes of said overlapped lengths of strap shaped to interlock with each other, at least one of said interlocking shoulders of said array on one of said lengths of strap being disposed beneath one of said non-

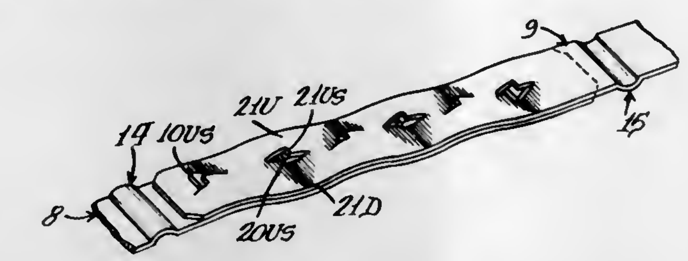

interlocking shoulders of the other length of strap, the face of said one interlocking shoulder having a width greater than that of the face of said one non-interlocking shoulder, said one interlocking shoulder further having a greater lateral extension than said one non-interlocking shoulder, said greater lateral extension being defined by the side of said one interlocking shoulder depending from said face of said one interlocking shoulder at an acute included angle for inhibiting separation and unlocking of said joints.

4,062,087
SELF-SUSTAINING SPRING FASTENER CLIPS FOR FURNITURE RAILS AND ASSEMBLIES THEREOF
Harrison Church Lingle, Northbrook, Ill., assignor to Hartco Company, Lincolnwood, Ill.
Filed Apr. 26, 1976, Ser. No. 679,904
Int. Cl.² A47C *23/02;* **A44B** *21/00;* **F16F** *3/02*
U.S. Cl. 24—84 R **5 Claims**

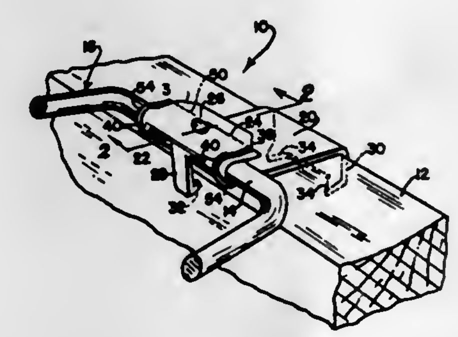

1. A self-supporting integral one-piece clip for securing the laterally turned end of a sinuous upholstery spring to the wooden rail an article of furniture, said clip being formed from an elongated strip of sheet metal stock and comprising: a stamping including a flat generally rectangular horizontal base portion designed for positioning on the top surface of said rail, an upper generally horizontal portion overlying the inside end region said base portion and spaced upwardly therefrom, and an interconnecting curvilinear reentrant bend extending between the inside ends of said base portion and overlying portion, said reentrant bend being adapted to receive the laterally turned end of the upholstery spring therein, said base portion, overlying portion, said reentrant bend all being of full clip width, said base portion being formed with a relatively narrow elongated downstruck tongue substantially midway between the side edges thereof and having its upper end extending centrally from the lower edge region of said reentrant bend, the outside end of said base portion being formed with a downturned flange-like portion which likewise is of full clip width, said downstruck tongue and downturned portion extending downwardly away from each other and providing inside and outside jaw portions which are adapted to straddle the inner and outer rail sides when the base portion is in position on the top surface of the rail, the lower end of said narrow downstruck tongue being provided with a laterally turned anchor prong and the lower edge of said downturned portion being provided with at least one laterally turned pointed anchor prong, the inside and outside jaw portions being designed for inward swinging movement toward each other upon application of inward pressure thereto to cause the opposed sides of the jaw portions to seize the sides of the rail coextensively in face-to-face contact therewith and the anchor prongs to fully penetrate the wood of the rail.

4,062,088
SHEARS COUPLING
Lars Olof Arne Fredriksson, Vaxjo, Sweden, assignor to K A Bergs Smide AB, Gelma, Sweden
Continuation of Ser. No. 651,960, Jan. 23, 1976, abandoned. This application Dec. 15, 1976, Ser. No. 750,871
Int. Cl.² A44B *21/00*
U.S. Cl. 24—73 HR **8 Claims**

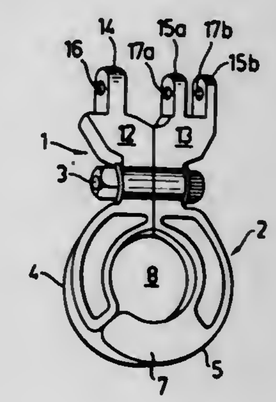

1. Shears coupling, comprising a pair of two-armed levers, a common pivot rotatably interconnecting said levers for movement between closed and open positions, each lever having an arcuate shank with a free end, said arcuate shanks being located substantially in the same plane as said common pivot, said free ends of said shanks overlapping each other when said levers are in said closed position for forming a substantially closed eye, the other arm of each lever comprising at least one lug projecting radially from said common pivot, each lug having a through opening which when said levers are in said closed position register with each other for permitting a pin or bolt to be introduced through said openings for locking the levers in the closed position whereby to lock said eye closed.

4,062,089
CLASP MECHANISM
Peter Vinczer, Room 706, 30 Bloor St. W., Toronto, Ontario, Canada (M4W 1A2)
Filed Sept. 15, 1976, Ser. No. 723,569
Claims priority, application Canada, Sept. 22, 1975, 236047
Int. Cl.² A44B *3/04*
U.S. Cl. 24—97 **4 Claims**

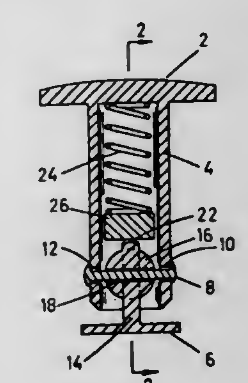

1. A cufflink comprising a medallion;

a cylindrical hollow tubular shaft extending from the back of said medallion;

a bar pivotally mounted on the end of said shaft by mounting

means comprising a member upstanding from said bar adapted to extend into the interior of said shaft and having a flat surface thereon remote from and parallel to said bar;
a spherical portion superimposed on said upstanding member of diameter slightly less than the internal diameter of said hollow tubular shaft;
a pin adapted to extend through the side walls of said tubular shaft and through the center of said spherical portion of said upstanding member thereby pivotally mounting said bar to said shaft.

4,062,090
SEALING DEVICE
Jan Eric Moolenaars, Dillenburglaan 2, Velp, Netherlands
Filed Sept. 13, 1976, Ser. No. 722,503
Claims priority, application Netherlands, Sept. 19, 1975, 7511081
Int. Cl.² A44B *19/30*
U.S. Cl. 24—205.11 L **8 Claims**

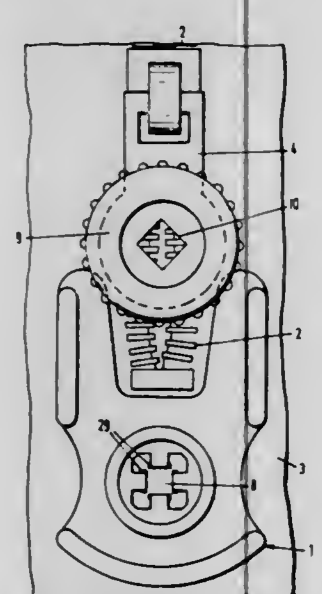

1. In a sealing device for a fastener having a pulling lip, the sealing device including a lock; a channel extending at least into said lock, having at least a portion thereof of uncircular cross-section and including wall means; a disposable rupturable sealing member which is to be inserted into said channel, said sealing member having a head and a shaft, said shaft having at least an end portion thereof which is of uncircular cross-section and said head being fixable to the pulling lip of the fastener; and means coupled to said sealing member for twisting at least that portion of said shaft adjacent said head relative to said end portion which is to be secured against rotation in said portion of said channel of uncircular cross-section for unsealing the device, the improvement wherein said wall means of said channel include at least one resilient portion thereby to allow said end portion of said sealing member to be forced past said resilient portion, said wall means including said resilient portion defining a boundary face which constitutes stop means for said end portion of said shaft when said end portion has been inserted into said channel and rests beneath said resilient portion of said wall means.

4,062,091
BUCKLE OF VEHICLE SAFETY BELTS, PARTICULARLY VEHICLE SAFETY BELTS FOR CHILDREN
Göte Eskil Yngve Holmberg, Postlada 2010, S-330 20 Anderstorp, Sweden
Filed June 7, 1976, Ser. No. 693,660
Claims priority, application Sweden, June 9, 1975, 7506544
Int. Cl.² A44B *19/00*
U.S. Cl. 24—230 R **5 Claims**

1. A seat belt buckle comprising a frame; a latch member pivotally mounted to the frame; a casing enclosing a substantial part of the frame and forming an insert opening; a tongue member insertable through said opening; a first pressure spring biasing the latch member to a position of engagement with said tongue member when inserted through said opening; a finger-access opening formed by said casing; and a second elongated resilient spring member separate and detached from the latch member and disposed in the casing and clamped between the frame and the casing in a manner to be bendable towards the latch member but to resiliently resist such bending, and accessible for finger pressure through said opening to be resiliently

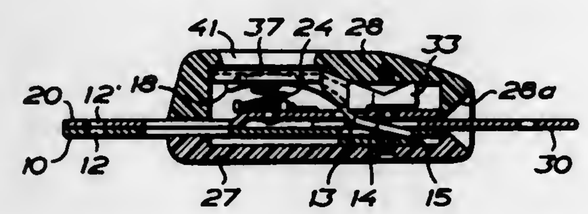

bent against its spring force transversely towards the latch member, the latch member being interposed between the first pressure spring member and the second elongated resilient spring; the second elongated resilient spring member operating the latch member to a disengaged position only against the combined spring force provided by said pressure spring and said elongated resilient spring member, for releasing the tongue member.

4,062,092
SAFETY HOOK
Yuzuru Tamada, and Susumu Yoshimura, both of Hyogo, Japan, assignors to Fujii Denko Company, Limited, Hyogo, Japan
Filed July 6, 1976, Ser. No. 702,817
Claims priority, application Japan, July 11, 1975, 50-96853; July 31, 1975, 50-107321
Int. Cl.² A44B *13/00*
U.S. Cl. 24—241 SB **8 Claims**

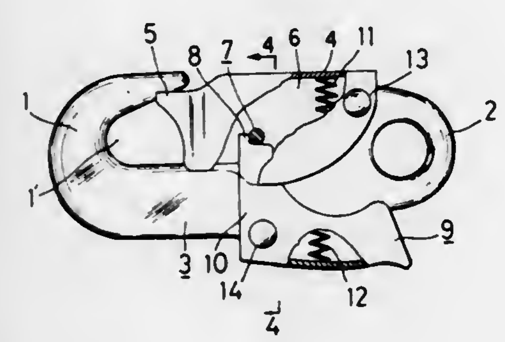

1. A safety hook, comprising:
a hook body;
a closure segment pivoted on said hook body and spring-loaded to close said hook, said segment having partially expanded, spaced apart side walls;
a pin passing through said segment, said pin having ends secured against the outside of said side walls; and
latch means pivoted on said hook opposite said segment and having ends adapted to engage said pin, the expanded portions of said side walls enclosing and being adapted to ride over said ends of said latch means, said latch means being spring-loaded so that said pin is normally engaged by said ends to lock said segment in a closed position,
whereby said segment side walls are prevented from distorting outwardly by said secured pin ends, said latch ends are prevented from distorting outwardly by said segment side walls, and said segment is adapted to be unlocked by rotating said latch means against its spring bias to disengage the latch means ends from the pin.

4,062,093
APPARATUS FOR TEXTURIZING FLOCKED FABRIC
Charles Klein, Mexico City, Mexico, assignor to United Merchants and Manufacturers, Inc., New York, N.Y.
Division of Ser. No. 299,910, Oct. 24, 1972, Pat. No. 3,961,115. This application Mar. 17, 1976, Ser. No. 667,555
Int. Cl.² D06C *23/02*
U.S. Cl. 26—2 R **3 Claims**

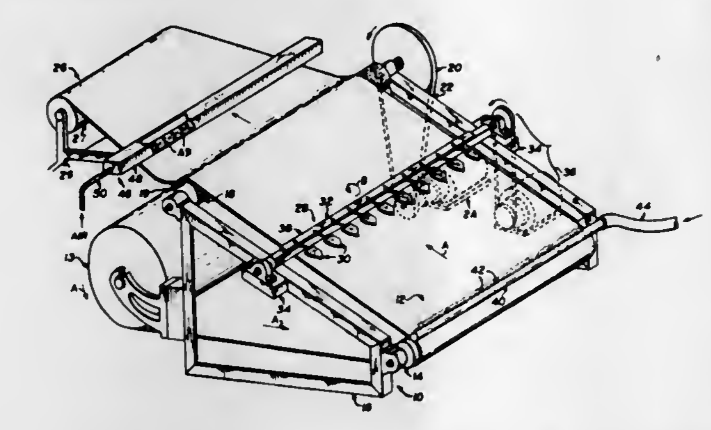

1. An apparatus for texturizing a flocked fabric comprising:
a. means for continuously feeding a flocked fabric from a source of supply such that the flocked fabric lies in a single plane;
b. means for wetting the flocked portion of the fabric with a liquid while the fabric is moving;
c. means subsequent to said wetting means for orienting the moving wetted flock of the fabric in a predetermined design while in said single plane, said means comprising a plurality of flexible beaters disposed across the width of the fabric and contacting means for bringing the beaters in a whip-like manner into continuous and rapid contact with the flocked side of the moving plane of fabric, said flexible beaters comprising two components, the first component being a flexible connecting member capable of whip-like action, the second component being a flock contacting member shaped in a preselected design, said second component being attached to one end of the connecting member and the other end of the connecting member being secured to the contacting means; and
d. means subsequent to said orienting means for drying the wetted fabric to set said flock in said predetermined design pattern.

4,062,094
APPARATUS FOR LATERALLY STRETCHING TEXTILE FABRIC AND THE LIKE
Mituru Kuroda, 16, Momoyama, Mizuno Sakon Higashimachi, Fushimi, Kyoto, Japan (612)
Filed Nov. 18, 1975, Ser. No. 632,981
Claims priority, application Japan, Dec. 27, 1974, 50-003409
Int. Cl.² D06C *3/06*
U.S. Cl. 26—75 **11 Claims**

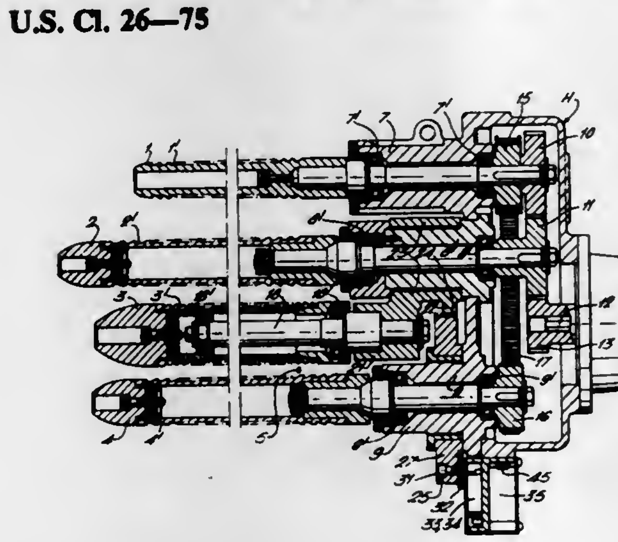

1. A device for laterally stretching a web of textile fabric or the like flexible material, comprising a pair of web-stretching devices engaging opposite side portions of said web, each of said pair of web-stretching devices including at least a pair of parallel uncurling fingers rotatable about their respective axes; a control roller rotatable about its own axis and arranged in parallel with and generally between said fingers; said fingers and roller being adapted to engage a side portion of said web being longitudinally fed so that a lateral pulling force is exercised on said web side portion; means for detecting lateral displacement of said web relative to the feeding direction thereof; first position changing means operable in response to said detecting means for changing the position of said roller relative to said fingers by displacing the axis of rotation of said roller about the axis of rotation of one of said fingers, while substantially keeping the parallel relation of said axes of rotation, thereby changing the magnitude of said lateral pulling force exercised on said web side portion; and second position changing means for changing the position of said detecting means in accordance with lateral displacement of said web.

11. A device for laterally stretching a web of textile fabric or the like flexible material, comprising a pair of web-stretching devices engaging opposite side portions of said web, each of said pair of web-stretching devices including a first, a second and a third uncurling finger having a helical groove formed on the outer circumferential surface thereof; means for supporting said fingers in parallel with each other and rotatably about their respective axes; means for positively rotating at least one of said fingers; means for mechanically connecting said fingers for simultaneous rotation; a control roller rotatable about its own axis; means for supporting said control roller generally between said second and third fingers and in parallel therewith; said fingers and roller being so arranged as to engage a selvage of said web longitudinally fed so that a lateral pulling force is exercised on said web selvage; means for detecting lateral displacement of said web relative to the feeding direction thereof; first position changing means operable in response to said displacement detecting means to change the position of said control roller relative to said fingers by displacing the axis of rotation of said control roller about the axis of rotation of said second finger, while keeping the parallel relation between said axes of rotation, thereby changing the magnitude of said lateral pulling force; means for supporting said pair of web-stretching devices in a laterally spaced apart relation to each other so that said web has each of its selvages engaged by said uncurling fingers and control roller of one of said pair of web-stretching devices; and translation means operable in response to said displacement detecting means to change the distance between said pair of web-stretching devices when web width changes and second position changing means for changing the position of said detecting means in accordance with lateral displacement of said web.

4,062,095
AUTOMATIC WIRE FEEDER
Edwin L. Storz, 7527 Woodland Ave., St. Louis, Mo. 63143
Filed Aug. 3, 1976, Ser. No. 711,406
Int. Cl.² B23P *19/04*
U.S. Cl. 29—802 **10 Claims**

1. Apparatus for use in manufacturing a wire product, said apparatus including a wire feeder, said feeder including an inclined surface down which the wires to be fed roll, a wire holding device having first and second spring biased members alternatively reciprocated by a cam and serving as stops for the wire at the lower end of the inclined surface, said first and second members being in side-by-side relationship, said second reciprocating member including a flat foot for pressing several wires adjacent the endmost wire against the inclined surface, said first reciprocating member including a blade longitudinally adjustable with respect to the foot for selectively spacing said blade down the inclined surface from said foot less than two diameters of the wire being fed such that when the foot is

pressed against the wires adjacent the endmost wire the blade permits only a single wire to roll from the lower end of the

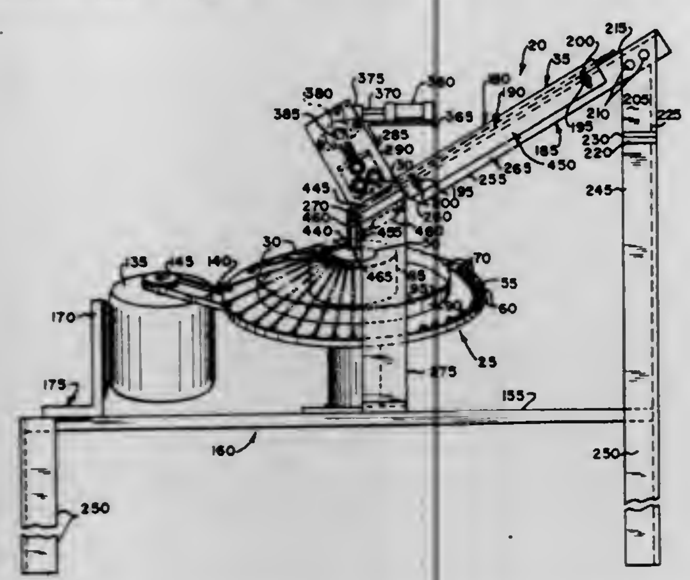

inclined surface, said flat foot being oppositely spring biased with respect to the bias of the second reciprocating member.

4,062,096
VARIABLE CROWN ROLL
Werner W. Elbe, McCandless Township, Allegheny County, Pa., assignors to Blaw-Knox Foundry & Mill, Inc., Pittsburgh, Pa.
Filed Jan. 3, 1977, Ser. No. 756,416
Int. Cl.^{2} B21B *31/08*
U.S. Cl. 29—113 AD **14 Claims**

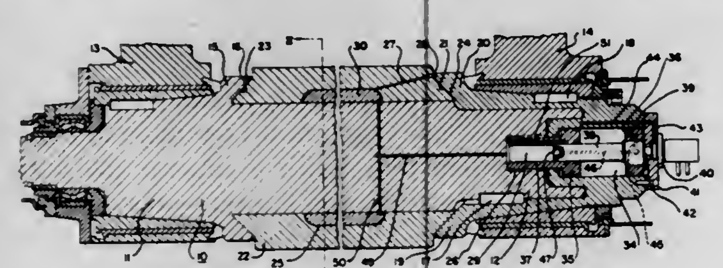

1. A variable crown roll for a rolling mill stand comprising an arbor having shoulders at each end, at least one shoulder being carried by a collar movable axially on the arbor, a sleeve surrounding the arbor between those shoulders so as to provide a working surface for the roll and being hollowed between its ends to form an elongated annular cavity between sleeve and arbor, means for supplying hydraulic fluid under pressure through the arbor to that cavity so as to expand the sleeve centrally and vary its crown, and hydraulic means connecting the arbor and the collar supplied with hydraulic fluid under pressure so as to urge the shoulders against the sleeve and clamp the ends of the sleeve against the arbor when hydraulic fluid is supplied to the cavity.

4,062,097
ROLL HAVING MAGNETIC DEFLECTION COMPENSATION
Jaakko Riihinen, Jyvaskyla, Finland, assignor to Valmet Oy, Finland
Filed Dec. 30, 1976, Ser. No. 755,548
Claims priority, application Finland, Dec. 31, 1975, 753749
Int. Cl.^{2} B21B *13/02*
U.S. Cl. 29—116 AD **14 Claims**

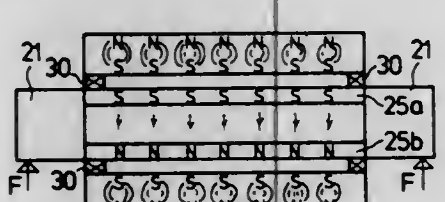

1. In a deflection-compensated roll assembly of the type adapted to be used in a calender or press section of a paper machine, inner non-rotating axle means and outer rotary shell means surrounding and rotatable with respect to said axle means, said inner axle means and outer shell means having a common axis and said inner axle means including an inner magnet means while said outer shell means includes an outer magnet means which rotates together with said outer shell means, said inner and outer magnet means cooperating for atracting said shell means and axle means toward each other on one side of said axis and for repelling said shell means and axle means from each other at an opposite side of said axis.

4,062,098
GUIDE ROLLER AND A METHOD OF MANUFACTURING SUCH A ROLLER
Hans Brugman, Ambt-Delden, Netherlands, assignor to Brugman Machinefabriek B.V., Almelo, Netherlands
Filed Nov. 29, 1976, Ser. No. 745,975
Claims priority, application Netherlands, Dec. 2, 1975, 7514050
Int. Cl.^{2} B21B *31/08*
U.S. Cl. 29—123 **3 Claims**

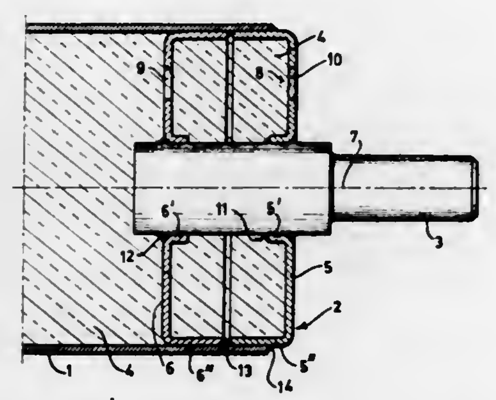

1. A roller for guiding and/or conveying a web of material, like in a textile processing machine, said roller comprising a jacket of stainless steel with a filling of foam plastic and two end covers each provided with a trunnion, wherein each end cover of the roller comprises two annular members with U-shaped cross-sections of sheet material, the upright sides of each U-section being parallel to the axis of the roller, the insides being secured to the respective trunnion the outsides being connected both with each other and with the jacket.

4,062,099
METHOD OF MAKING A SHIELD FOR A RADIATION PROJECTOR
Donald I. Gonser, Forest Park, Ohio, assignor to Dentsply Research and Development Corporation, Milford, Del.
Division of Ser. No. 547,049, Feb. 4, 1975. This application Mar. 15, 1976, Ser. No. 667,265
Int. Cl.^{2} B29C *27/00;* B29F *5/00*
U.S. Cl. 29—415 **4 Claims**

1. A method of forming a shield for a radiation piping rod which comprises disposing a length of heat-shrinkable, resilient plastic resin tubing on a mandrel conforming to the rod, heating the mandrel and the length of tubing to a sufficient temperature to allow the tubing to shrink around the mandrel, cooling the mandrel with the length of tubing thereon to set the resin

of the tubing in its shrunken condition, forming a lengthwise slit in the length of tubing, stripping the length of tubing from

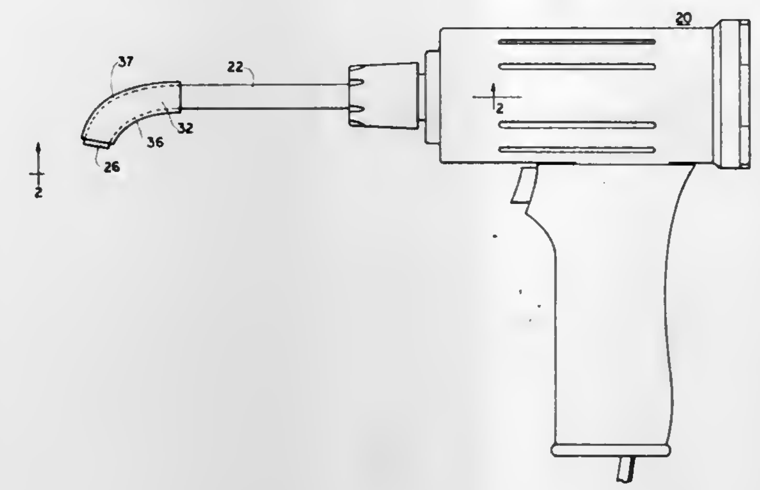

the mandrel to form the shield, and mounting the shield on the rod.

4,062,100
METHOD OF AND APPARATUS FOR REMOVING COUPLING MEMBERS OF A SLIDE-FASTENER STRINGER FROM A SUPPORT TAPE
Helmut Heimberger, Locarno, Switzerland, assignor to Optilon W. Erich Heilmann GmbH, Cham, Switzerland
Filed Jan. 12, 1977, Ser. No. 758,835
Claims priority, application Germany, Jan. 15, 1976, 2601383
Int. Cl.^{2} B21D *53/50;* B29D *5/00;* B23P *19/00*
U.S. Cl. 29—427 **7 Claims**

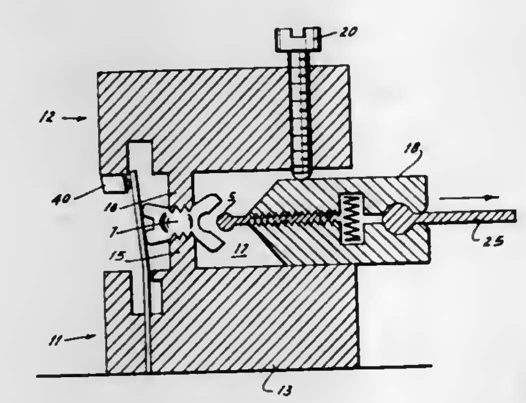

1. A process for removing coupling members molded onto an edge of a support tape of a slide-fastener stringer half, said coupling members having shanks straddling said edge and projecting portions projecting beyond said edge, said method comprising the steps of:

applying pressure to each of the members to be removed in a direction orthogonal to the plane of said slide-fastener half sufficient to cause flow of the material of the pressed member and spreading of the shanks thereof; and

relatively displacing the coupling member with its spread-apart shanks and the edge of said tape to withdraw said edge from the coupling member to which the pressure is applied.

4,062,101
METHOD AND TOOL FOR ASSEMBLING AN IMPACT RESISTANT GASOLINE TANK
Mike La Custa, Ferndale, Mich., assignor to Chrysler Corporation, Highland Park, Mich.
Filed Oct. 22, 1976, Ser. No. 734,905
Int. Cl.^{2} B23P *11/02, 19/02*
U.S. Cl. 29—451 **8 Claims**

1. In a method for assemblying an annular body of resiliently deformable material within a circular opening of an automobile fuel tank to provide a seal between said tank and a filler tube slidably axially within said body without destroying the seal, said body having an annular radially outwardly opening sealing groove therein for containing in fluid sealing relationship an annular edge of said tank defining said opening, said groove being defined by axially spaced interior and exterior annular sides, the outer radius of said interior annular side being greater than the outer radius of said exterior annular side, the surface of said interior side confronting said exterior side being engageable with the interior of said tank around said opening in fluid sealing relationship when said seal, tank, and tube are assembled, said body having a tubular sealing portion extending interiorly from said interior side and engageable with the outer periphery of said filler tube in fluid sealing relationship within said tank when said seal, tank, and tube are assembled, said body having an annular radially inwardly opening channel located exteriorly of said radially outwardly opening groove and defined by axially spaced annular sides engageable at their inner peripheries with said outer periphery of said filler tube in fluid sealing relationship exteriorly of said tank when the said seal, tank, and tube are assembled, the last named sides being spaced axially by an annular base of said radially inwardly opening channel having an outer radius less than the outer radius of said interior side, the steps of gripping said body adjacent a peripheral edge portion thereof exteriorly of said exterior side and forcing said resiliently deformable body edgewise and inwardly completely through said opening by deforming said body, thereafter pulling said edge portion of said body outwardly completely through said opening adjacent in edge portion of the latter to force the last named edge portion into said sealing groove and to force the juxtaposed portion of said interior side against the adjacent interior of said tank, thereafter forcing said annular edge of said opening into said

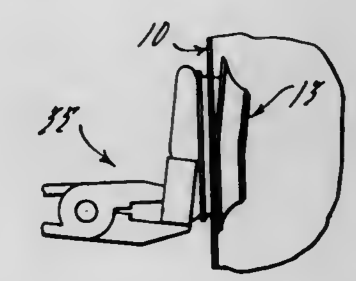

sealing groove entirely around said opening and forcing said annular interior side against the interior of said tank entirely around said opening by continuing said pulling on said edge portion of said body to deform and elongate the latter axially until said base of said inwardly opening channel is pulled completely outwardly through said opening.

8. In a tool for assembling an annular body of resiliently deformable material within a circular opening of an automobile fuel tank to provide a seal between said tank and a filler tube slidably axially within said body without destroying the seal, said body having an annular radially outwardly opening sealing groove therein for containing in fluid sealing relationship an annular edge of said tank defining said opening; said groove being defined by axially spaced interior and exterior annular sides, the outer radius of said interior annular side being greater than the outer radius of said exterior annular side, the surface of said interior side confronting said exterior side being engageable with the interior of said tank around said opening in fluid sealing relationship when said seal, tank, and tube are assembled, said body having a tubular sealing portion extending interiorly from said interior side and engageable with the outer periphery of said filler tube in fluid sealing relationship within said tank when said seal, tank, and tube are assembled, said body having an annular radially inwardly opening channel located exteriorly of said radially outwardly opening groove and defined by axially spaced annular sides engageable at their inner peripheries with said outer periphery of said filler tube in fluid sealing relationship exteriorly of said tank when the said seal, tank, and tube are assembled, the last named sides being spaced axially by an annular base of said radially inwardly opening channel having an outer radius less than the outer radius of said interior side, said tool comprising raidally inner

and outer jaws, said outer jaws having a clamping portion engageable with the radially outer surface of a section of said base, said inner jaw having a clamping portion extending radially outwardly toward the first named clamping portion for entering said channel and engaging the radially inner surface of said section in opposition to the first named clamping portion, and means for selectively operating said jaws to clamp said section firmly therebetween or for releasing the latter by withdrawing the radially outwardly extending portion of said inner jaw from said channel, said clamping portion of said inner jaw being dimensioned to engage the base and axially outer side of said channel, said clamping portions comprising a pair of interfitting U-shaped members dimensioned to clamp said section therebetween, each being secured at its U-base to its respective jaw, the ends of the U-arms of each U-shaped member remote from its associated U-base being spaced transversely of the axis of said annular body a distance less than the corresponding spacing of the undeformed portions of said section to be clamped by said ends when said jaws are operated to clamp said section, thereby to elongate said yieldable body when clamped between said clamping portions.

4,062,102

PROCESS FOR MANUFACTURING A SOLAR CELL FROM A REJECT SEMICONDUCTOR WAFER

John E. Lawrence, Cupertino, and Icheng Wu, Sunnyvale, both of Calif., assignors to Silicon Material, Inc., Mountain View, Calif.

Filed Dec. 31, 1975, Ser. No. 645,791

Int. Cl.² B01J *17/00*

U.S. Cl. 29—572 **14 Claims**

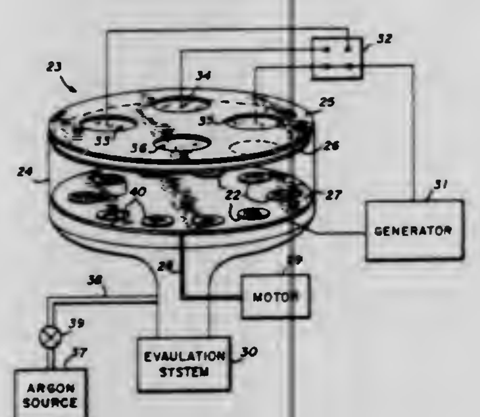

1. A process for manufacturing a solar cell from a reject semiconductor wafer containing process induced contaminants in the silicon bulk latice, comprising:

stripping all external layers from said wafer;

etching the surfaces of said wafer so as to effectively remove all P/N junctions;

introducing a layer of dopant to form a P/N junction in a first of said wafer surfaces;

forming a first conductive electrode over said layer of dopant; and

forming a second conductive electrode on a second surface of said wafer opposed to said first surface, said solar cell being produced from the reject wafer without gettering to eliminate the process induced contaminants.

4,062,103

METHOD FOR MANUFACTURING A SEMICONDUCTOR DEVICE

Haruo Yamagishi, Fujisawa, Japan, assignor to Tokyo Shibaura Electric Co., Ltd., Tokyo, Japan

Filed Sept. 2, 1975, Ser. No. 609,899

Claims priority, application Japan, Sept. 14, 1974, 49-106498

Int. Cl.² B01J *17/00*

U.S. Cl. 29—580 **6 Claims**

1. A method for manufacturing a semiconductor device comprising the steps of:

forming a Schottky barrier metal layer of niobium on one surface of a gallium arsenide substrate to provide a Schottky barrier therebetween;

forming a blocking metal layer on the Schottky barrier metal layer made of at least one material selected from the group consisting of molybdenum and tungsten;

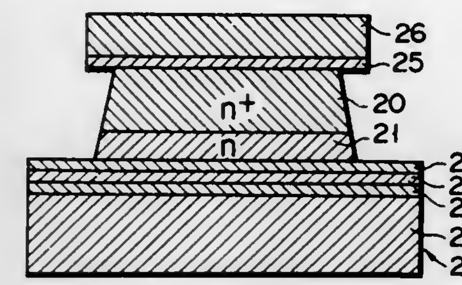

forming a gold electrode layer on the blocking metal layer, and then;

subjecting the Schottky barrier to heat treatment at 350° to 800° C to make it thermally stable.

4,062,104

DISPOSABLE CLINICAL THERMOMETER PROBE

Walter Norman Carlsen, 892 Mango Ave., Sunnyvale, Calif. 94087

Continuation-in-part of Ser. No. 610,860, Sept. 5, 1975, abandoned. This application Jan. 12, 1977, Ser. No. 758,561

Int. Cl.² H01S *4/00;* B21D *22/00;* H01V *1/02*

U.S. Cl. 29—592 R **8 Claims**

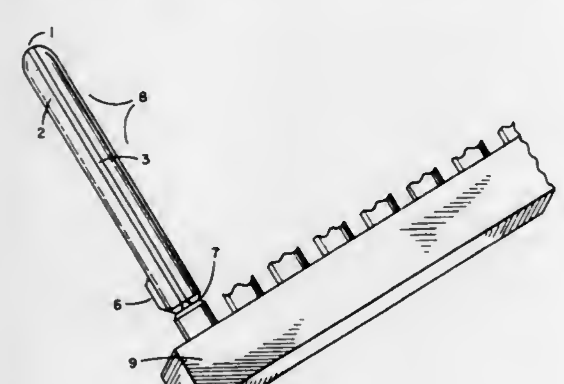

1. A method of making a disposable clinical thermocouple probe comprised of:

forming a large plastic comb probe structure,

forming a large mask assembly,

disposing the mask assembly around the comb probe structure,

positioning the probe/mask assembly in a vacuum deposition process machine with its orientation in relation to a first metal vapor source defined by the line of sight nature of the vacuum deposition process,

energizing a first metal vapor source and despositing a first thin strip of metal with a thickness from .0001 mils to about 1 mil,

energizing a second metal vapor source which is dissimilar to the first metal vapor source and whose orientation in relation to the probe/mask assembly is defined by the line of sight nature of the vacuum deposition process,

depositing a second thin strip of dissimilar metal overlapping the first thin strip of metal at the nose of the cylindrical substrate and with a thickness from 0.0001 mils to about 1 mil,

removing the mask assembly from the comb probe structure, fracturing the probes from the backbone of the comb probe structure at their individual parting lines into multiple sterile containers,

sealing the sterile containers.

4,062,105

METHOD FOR FABRICATING FERROELECTRIC ULTRASONIC TRANSDUCERS

Robert A. Day, Livermore, Calif., assignor to The United States of America as represented by the Secretary of the Navy, Washington, D.C.

Filed Dec. 20, 1976, Ser. No. 752,571

Int. Cl.² H04R *31/00*

U.S. Cl. 29—594 **2 Claims**

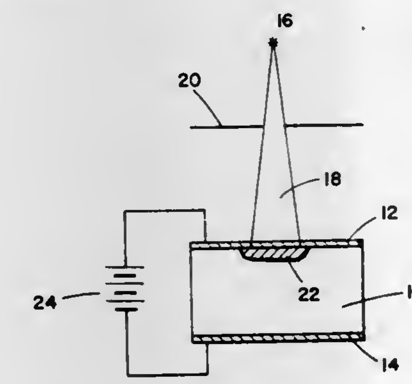

1. A method for fabricating ferroelectric ultrasonic transducers comprising the steps of:

a. placing a ferroelectric material in a vacuum, said ferroelectric material having opposing faces with thin electrically conductive surfaces thereon, which surfaces are electrically insulated from each other;

b. directing a beam of electrons at one face of said ferroelectric material to produce a plate in said ferroelectric material, said plate being defined as the region within said ferroelectric material in which the Curie temperature is everywhere exceeded; and

c. imposing a high potential difference between said conductive surfaces while the Curie temperature of said plate is exceeded to polarize said plate.

4,062,106

METHOD FOR SINGLING OUT AND SERIALLY FEEDING ELECTRICAL LEADS

James Woodrow Hammond, Camp Hill, and Mervin Leonard Shughart, Carlisle, both of Pa., assignors to AMP Incorporated, Harrisburg, Pa.

Continuation of Ser. No. 628,028, Nov. 3, 1975, abandoned. This application Feb. 11, 1977, Ser. No. 767,866

Int. Cl.² H01R *43/04*

U.S. Cl. 29—628 **7 Claims**

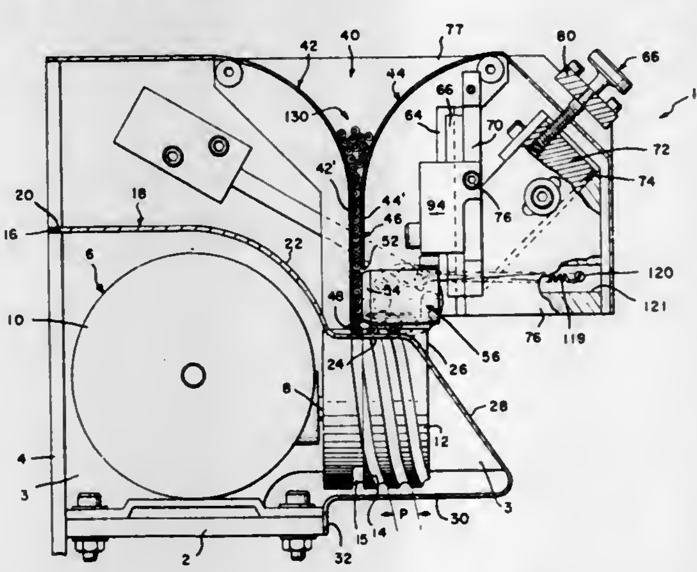

1. A method for terminating electrical leads with corresponding electrical terminals, comprising the steps of:

serially locating a plurality of electrical leads within a groove of a rotatable machine element,

rotating said machine element to transport serially said leads within a helical portion of said groove toward a terminal applying station,

detecting the presence of each lead,

registering each detected lead in proper registration with said terminal applying station,

applying an electrical terminal to each detected lead in proper registration with said terminal applying station, and

ejecting each lead terminated with an electrical terminal from said terminal applying station.

4,062,107

METHOD OF MANUFACTURING INFRA-RED DETECTOR

Maurice V. Blackman, and Michael D. Jenner, both of Southampton, England, assignors to U.S. Philips Corporation, New York, N.Y.

Filed July 14, 1976, Ser. No. 705,078

Int. Cl.² H01R *43/00*

U.S. Cl. 29—628 **16 Claims**

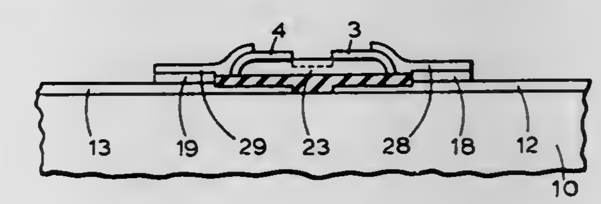

1. A method of manufacturing an infra-red detector device, comprising the steps of providing at least one detector element of infra-red sensitive material having at one major side at least one active surface area defined between a pair of electrically conductive contact layers spaced apart on the surface and which extend over a pair of oppositely curve edges of the element at the said one major side, adhering the opposite major side of the element to an insulating substrate provided on one surface with an electrically conductive pattern of lead-out conductors, the said oppositely located curved edges of the element being located in the proximity of oppositely located end portions of lead-out conductors of the pattern, and applying electrically conductive material to form interconnections between the contact layers on the element and the adjacently situated end portions of the lead-out conductors, said interconnections extending as conductive layers on the upper surface of the lead-out conductors and at least on those portions of the contact layers of the element situated over the said curved edges at the one major side.

4,062,108

STICK INSERTION APPARATUS

Edward D. Cottrell, Cattaraugus, N.Y., assignor to Champion International Corporation, Stamford, Conn.

Filed July 2, 1976, Ser. No. 702,016

Int. Cl.² B23Q *7/10*

U.S. Cl. 29—809 **9 Claims**

1. An apparatus for mounting products on a stick comprising:

a. opposed first and second reciprocable holding members, each of said holding members having a contoured, product engaging surface that is a mirror image of the opposed surface, said contoured product engaging surfaces being operative to center and circumferentially engage a product, along a major portion of its length, in a position on an insertion axis;

b. means for reciprocating said first and second holding members such that they simultaneously converge or diverge in a direction perpendicular to the insertion axis;

c. stick supply means for positioning a stick on a supporting surface in alignment with the insertion axis; and

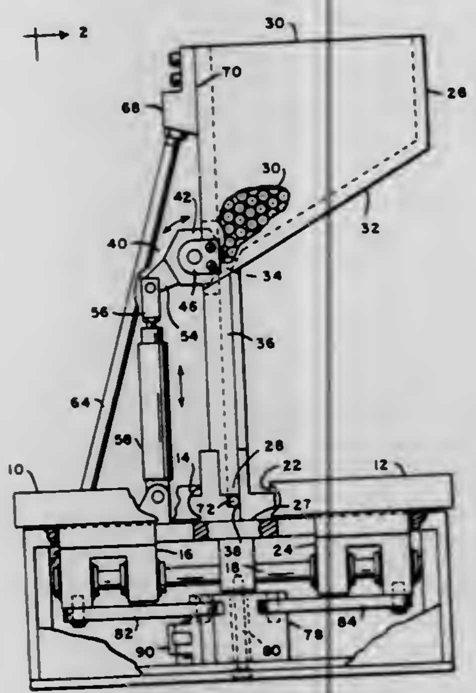

d. means for driving the stick along the insertion axis into the product held by said holding means.

4,062,109
FINGER-TOE NAIL CLIPPER PROVIDED FOR CATCHING AND HOLDING THE CLIPPED-OFF FINGER OR TOE NAIL PORTIONS

Manki Min, 45-22 39th Place, Sunnyside, N.Y. 11104
Filed Apr. 26, 1976, Ser. No. 680,377
Int. Cl.² A45D *29/02*
U.S. Cl. 30—28 **5 Claims**

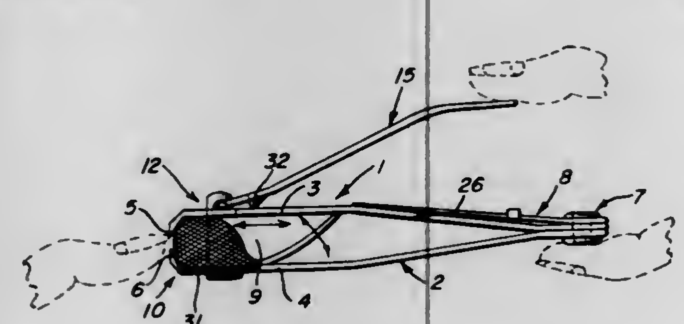

1. In combination, a nail clipper of the type including a pair of elongated horizontally disposed upper and lower spring material strip members including front and rear end portions and opposite longitudinal sides, said rear end portions being joined together and said front end portions being slightly divergent and spaced apart for movement toward and away from each other, the forward terminal ends of said upper and lower strip members including downturned and upturned cutting edges, respectively, opposing each other and extending transversely of said front end portions for cutting nail portions therebetween, an upstanding post anchored relative to the forward end position of said lower strip member and slidably received upwardly through a vertical opening provided therefor formed through the forward end portion of said upper strip member, an operating lever pivotally supported from the upper end of said post above and engageable with said upper strip member and swingable into and out of position operative to force said front end portions of said strips toward each other and thus bring said cutting edges into cutting engagement with each other, a receptacle for receiving cut nail portions, said receptacle including longitudinal opposite side walls, a top wall structure disposed between and anchored relative to the upper marginal edges of said side walls and a rear wall structure disposed between and anchored relative to the rear marginal edges of said side walls, whereby said receptacle opens forwardly and downwardly, said receptacle being received between the front end portions of said strip members immediately rearward of said cutting edges with said upper wall structure engaging the underside of said upper strip member and the lower marginal edges of said side walls projecting downwardly over the opposite longitudinal sides of said lower strip member, the forward marginal portion of said top wall structure including a central forwardly opening recess formed therein in which the opposing portion of said post is received, the lower marginal portion of said rear wall being abutted against the opposing upper surface portion of said lower strip member and including a rearwardly and upwardly inclined resilient leaf spring member whose upper rear end is abutted against the undersurface of said upper strip member centrally intermediate its opposite ends, the engagement of said lower marginal portion of said rear wall with said lower stip member defining a fulcrum point of engagement of said receptacle with said lower strip member and the engagement of said leaf spring member with the underside of said upper strip member serving to bias said receptacle about said fulcrum point to maintain said upper wall structure abutted against the underside of the forward end portion of said upper strip member.

4,062,110
PORTABLE TOOL FOR STRIPPING METAL SHEATHING FROM HEAVY CONDUCTIVE CABLE

Marcelino N. Alvarez, 93-40 Pl., Hollis, N.Y. 11429
Filed July 2, 1976, Ser. No. 702,190
Int. Cl.² B21F *13/00;* **B26B** *27/00*
U.S. Cl. 30—90.8 **10 Claims**

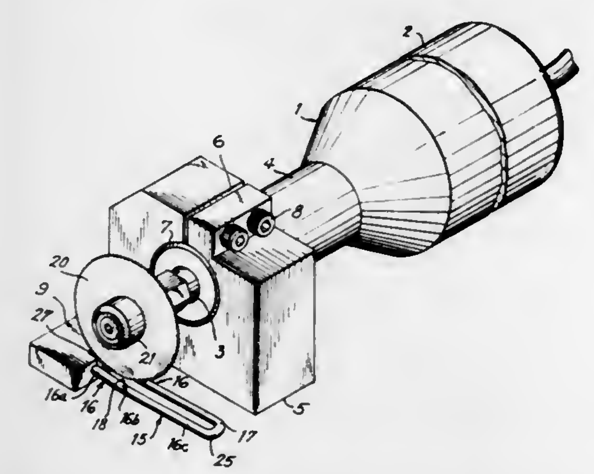

1. A portable tool for stripping metal sheathing from heavy conductive cable, said tool comprising drive means including a casing shaped to be manually held and a rotatable drive shaft projecting from said casing, a fixture secured to said casing, a flange in the form of a plate secured to said fixture and projecting therefrom substantially parallel to said drive shaft, a circular cutting wheel secured to said drive shaft for rotation therewith, and guide means secured to said flange and extending transversely therefrom into proximity with said cutting wheel, said guide means being elongated and projecting to a point beyond said cutting wheel, said guide means defining a passage therein in which said cutting wheel penetrates, said guide means being relatively thin for penetrating between an outer metal sheathing of a cable and an inner resilient sheathing for positioning said cutting wheel to cut said outer metal sheathing while guiding the cutting wheel over the inner sheathing and preventing cutting thereof, said guide means having a lower surface so disposed in relation to said cutting wheel such that the cutting wheel lies in entirety above said lower surface and cannot project therebeyond, said guide means extending substantially perpendicularly from said flange and having a small upward bend therein at an intermediate location along the length thereof to form inner and outer portions on opposite sides of said bend, said bend being disposed along said guide means in a plane extending substantially perpendicular to said guide means and passing substantially through the axis of rotation of the drive shaft such that said guide means has a free end which is elevated with respect to said inner portion of the guide means to guide the outer sheathing to said cutting wheel in separated relation from said inner sheathing and to position said flange at a raised level above said outer sheathing.

4,062,111
SHARPENER MOUNTING STRUCTURE AND KNIFE GUARD FOR CIRCULAR KNIFE TYPE OF CLOTH CUTTING MACHINE

Frederick G. Clark, Naples, Fla., assignor to Eastman Machine Company, Buffalo, N.Y.
Filed Sept. 20, 1976, Ser. No. 725,129
Int. Cl.² B25F *3/00*
U.S. Cl. 30—139 **13 Claims**

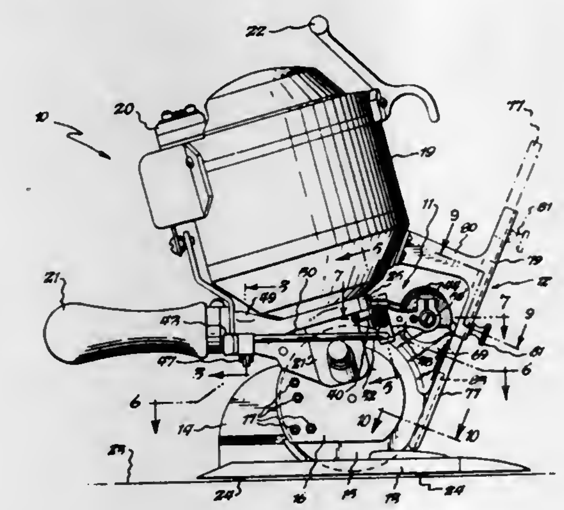

1. A guard construction for a rotary cutting machine having a base, a circular knife mounted on said base, motor means for driving said circular knife, and standard means for mounting said motor means above said base, comprising an elongated rod-like guard member, slot means in said rod-like guard member for receiving a segment on the periphery of said circular knife approximate said base, and mounting means for mounting said rod-like member on said base to permit movement of said guard member between a guarding position wherein said slot means receive said segment and an open position wherein said segment is exposed for cutting.

4,062,112
EXPLOSIVELY OPERATED WIRE CUTTER

Hilton J. Lake, 785 W. 51st Place, Hialeah, Fla. 33012
Filed Feb. 17, 1977, Ser. No. 769,442
Int. Cl.² B26B *15/00;* **B26D** *5/12*
U.S. Cl. 30—228 **11 Claims**

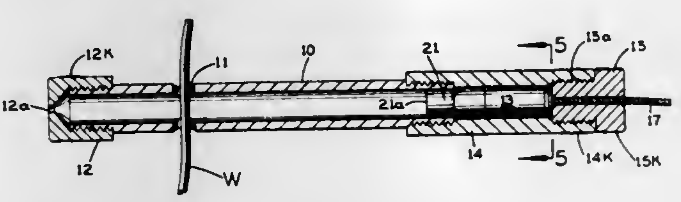

1. In an explosively operated wire cutter having:
a tubular barrel with at transverse wire-receiving slot which extends continuously over more than half the transverse peripheral extent of the barrel, whereby to enable the barrel to be applied transversely to the wire to position a segment of the wire extending transversely across the inside of the barrel;
and means for positioning an explosive charge in operative relationship to the barrel at one axial side of said slot;
the improvement which comprises:
a piston of dielectric material closely received slidably in said barrel for explosive actuation by the explosive charge past the slot from a starting position at said one axial side of the slot adjacent the explosive charge, said piston having a blunt, wire-engaging front face away from the explosive charge which extends transverse to the axis of the barrel for substantially the complete interior cross-section of the barrel, whereby to completely sever said segment from the remainder of the wire on either side of the barrel and blow the severed ends of the wire away from the barrel on either side by venting from the barrel the explosion gases behind the piston out through said slot when the piston is explosively actuated axially past the slot.

4,062,113
SCISSORS WITH SHEATH TYPE REPLACEABLE BLADES

Minoru Ishida, Gifu, and Kenzi Komiyama, Seki, both of Japan, assignors to Feather Safety Razor Co., Ltd., Osaka, Japan
Filed Dec. 21, 1976, Ser. No. 753,142
Claims priority, application Japan, Dec. 30, 1975, 51-177183[U]
Int. Cl.² B26B *13/04*
U.S. Cl. 30—260 **6 Claims**

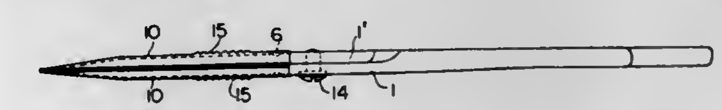

1. A scissors with sheath type replacable blades, comprising a pair of components of the scissors, each provided at its one end portion with a tang-type fitting extension and having therein a depression and sheath type replacable blades, each comprising a sheath outer member and a blade,
said sheath outer member including a pair of flange portions and supporting on its inner surface an inwardly protruding boss,
said flange portions of said sheath outer member being secured to said blade member to define an enclosed space for receiving said blade,
said boss being received in said depression when said blade is fully received into said space.

4,062,114
VEGETATION CUTTING APPARATUS

Woodrow Wilson Luick, 4410 Friar Tuck, Corpus Christi, Tex. 78411
Filed May 7, 1976, Ser. No. 684,359
Int. Cl.² A01D *55/18;* **B26B** *27/00*
U.S. Cl. 30—276 **8 Claims**

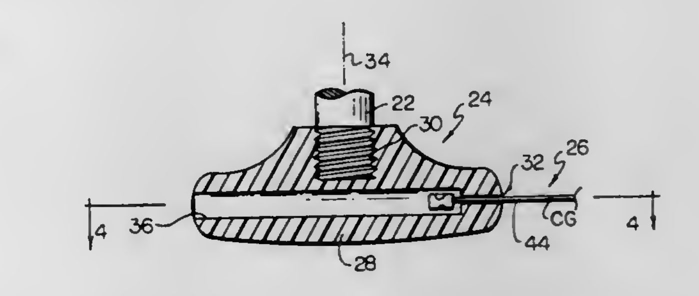

1. Apparatus for cutting vegetation comprising
a driving mechanism having a shaft rotatable about an axis;
a cutting element holder mounted on the shaft for rotation therewith providing an outer peripheral surface and a cutting element passage opening through the peripheral surface on opposite sides of the axis defining a centrifugal force induced direction of cutting element movement, the cutting element passage providing a threading section and a receiving section of smaller dimension, the junction between the threading and receiving sections comprising an abutment;
an unspooled generally flexible finite length non-metallic cutting element removably positioned in the receiving passage section and eccentrically disposed relative to the

axis and having a cutting end portion extending outwardly of the holder and an enlargement on an end opposite from the cutting end portion engaging the abutment; and

means preventing movement of the cutting element from the receiving passage section in the centrifugal force induced direction comprising the enlargement on the cutting element and the abutment in the passage;

the holder comprising means defining a cutting element inserting and removing path communicating with the receiving passage section for inserting and removing the cutting element from the receiving of passage section while the holder is attached to the shaft, the removing means including means for removing the cutting element along the removing path by the application of a single force on the cutting element in a direction opposite to the centrifugal force induced direction.

4,062,115
ROTARY GARDEN CUTTER
William R. Lee, Calimesa, Calif., assignor to Leeco Manufacturing, Inc., Calimesa, Calif.
Filed Nov. 2, 1976, Ser. No. 738,320
Int. Cl.² A01D *55/18*
U.S. Cl. 30—276 **5 Claims**

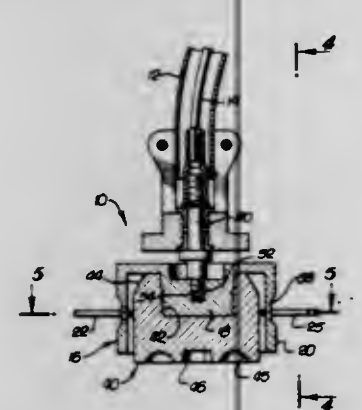

1. In a rotary garden cutter:
a. a two part rotary cutter head;
b. one of the parts of said cutter head having a peripheral wall surrounding a hollow interior, said wall being provided with a number of pairs of apertures extending substantially in circular array about said wall;
c. a corresponding number of flexible cutter lines for the aperture pairs respectively, each of said lines being threaded into and out of the apertures of the corresponding pair, forming thereby two cutter elements extending from said cutter head periphery and forming a central portion exposed interiorly of said wall;
d. the other of the parts of said cutter head comprising a clamp;
e. means detachably connecting said cutter head parts together;
f. said clamp part when connected to its companion cutter head part being positioned within said wall to engage the central portions of said cutter lines bridged by the pairs of apertures; and
g. means connecting one of said cutter parts to a rotary power device.

4,062,116
FABRIC CUTTING TOOL
Gertrude V. Arnott, 314 N. 7th St., Delavan, Wis. 53115
Filed Jan. 5, 1977, Ser. No. 756,994
Int. Cl.² B26B *29/00*
U.S. Cl. 30—292 **9 Claims**

1. A fabric cutting tool comprising an elongated shank having a straight main body portion and an upwardly curved bifurcated end portion, said bifurcated end portion having a rotary cutter rollingly mounted between the bifurcated, a protective shield over said rotary cutter, a pair of guide wheels bracketing said bifurcated end portion and acting in rolling association with said rotary cutter and a foot plate providing a

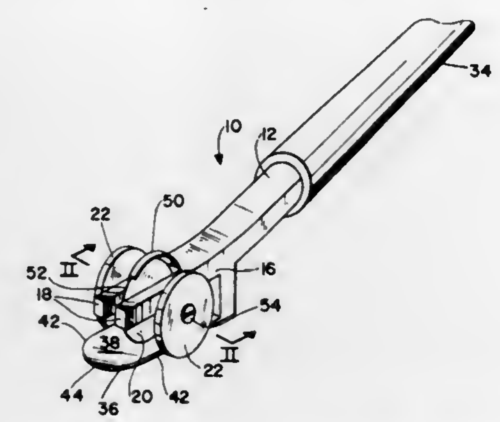

cutting surface for the fabric extending under said curved end portion.

4,062,117
RESCUE TOOL MEANS
John D. Coleman, 422 S. Greer St., Memphis, Tenn. 38111
Filed Sept. 27, 1976, Ser. No. 727,160
Int. Cl.² B26B *3/00*
U.S. Cl. 30—317 **8 Claims**

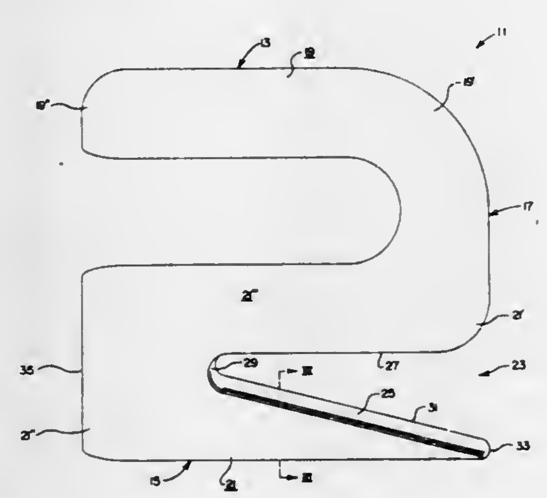

1. A flat, one-piece rescue tool comprising a first member, a second member, and a throat member joining said first and second members one to the other; said first member including a grip portion for allowing said rescue tool to be grasped, said second member having a notch portion, said notch including a cutting edge, said first and second members extending rearwardly of said throat member, said second member including an anvil portion opposite said notch portion and positioned at a right angle to the longitudinal axis of said second member for allowing said tool to be hammered in a direction parallel to the longitudinal axis of said second member.

4,062,118
KNIFE HAVING AN INTERCHANGEABLE BLADE
Paul Modafferi, 1601 Anderson Ave., Fort Lee, N.J. 07024
Filed July 8, 1976, Ser. No. 703,427
Int. Cl.² B26B *1/00*
U.S. Cl. 30—339 **3 Claims**

1. A knife having an interchangeable blade comprising:
an elongated rigid unitary handle element dimensioned to be held in a human hand, said elongated rigid unitary handle element having an elongated open-end chamber therein, the longitudinal axis of said chamber being substantially coaxial to the longitudinal axis of said handle element, said handle element having a plurality of apertures located therethrough, the longitudinal axis of said plurality of apertures being substantially transverse to said longitudinal axis of said chamber;

a sharpened knife blade providing a tang at one end thereof, said tang having a plurality of rectangular holes therethrough, the longitudinal axis of said plurality of holes being substantially perpendicular to the longitudinal axis of said knife blade, said tang dimensioned to be inserted in said open-end of said chamber and to be removably retained therein, said plurality of holes coaxially aligning with said plurality of apertures in said handle when said tang is inserted in said chamber; and

bolt means for securing said tang within said chamber, said bolt means for insertion through said coaxially aligned holes and apertures, said bolt means including a plurality

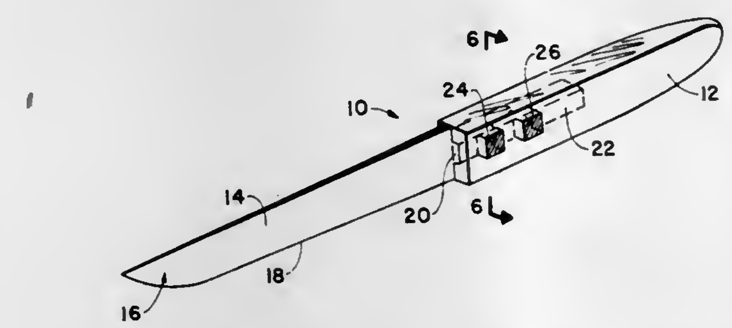

of bolts and nut elements, said bolts having a slotted head and an externally threaded shank portion, said nut elements having a head and an internally threaded shank portion, said internally threaded shank portion dimensioned to capture and threadably cooperate with said externally threaded shank portion, said shank portions of said pluarlity of nut elements have a substantially rectangular cross-section, said plurality of apertures falling adjacent said heads of said plurality of nut elements when inserted therein being rectangular in shape, said heads of said plurality of nut elements being correspondingly rectangular in shape.

4,062,119
SYMPHYSEAL-RAMI ENDOSTEAL IMPLANT
Leonard I. Linkow, 30 Central Park South; Joni Chambliss, 58 W. 58th St., both of New York, N.Y. 10019, and Wallace W. Cloyd, 906 Wyoming Ave., Billings, Mont. 59101
Filed June 28, 1976, Ser. No. 700,585
Int. Cl.² A61C *13/00*
U.S. Cl. 32—10 A **57 Claims**

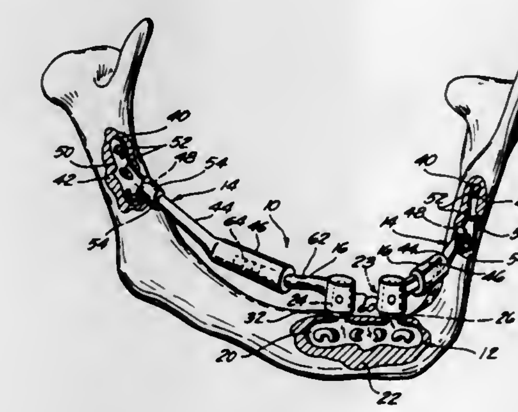

1. A symphyseal-rami endosteal implant comprising
A. a symphysis blade having a first portion adapted to be received in the symphysis bone and a second portion defining at least one generally vertically projecting post;
B. at least one ramus blade having a first portion adapted to be received in a ramus bone and a second portion defining a first telescoping part adapted to extend generally parallel to the occlusal plane when said ramus blade first portion is received in the ramus bone; and
C. at least one intermediate member for connecting said ramus blade to said symphysis blade and having generally laterally aligned first and second portions, said first portion being adapted to engage and be secured to an associated symphysis blade post and said second portion defining a second telescoping part adapted to variably telescopically cooperate with an associated ramus blade second portion.

4,062,120
DIGITAL ELECTRONIC MICROMETER
John M. Lacagnina, Henrietta; Ernest G. Weber, Fairport; David W. Rucinski, Rochester, and Bruce R. Robinson, Penfield, all of N.Y., assignors to Quality Measurement Systems, Inc., Rochester, N.Y.
Filed June 10, 1976, Ser. No. 694,542
Int. Cl.² G01B *3/18*
U.S. Cl. 33—166 **17 Claims**

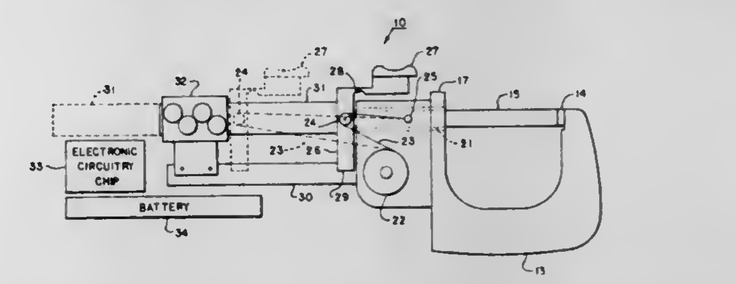

1. A digital electronic micrometer having a frame including a yoke, an anvil on said yoke, and a bushing, a probe supported by said bushing and movable relative to said anvil, and a spring for biasing said probe toward said anvil, said micrometer comprising:
a. a handle secured to said frame and configured to be held in one hand for manually holding and operating said micrometer without touching said yoke;
b. said handle being hollow and enclosing parts of said micrometer;
c. said handle being formed of a resin material for thermally insulating the heat of said hand holding said handle from said yoke and said frame;
d. an optical scale secured to said probe to extend in the direction of motion of said probe and move directly with said probe within said handle;
e. a reader assembly fixed relative to said direction of motion of said probe and arranged within said handle so that said scale is movable relative to said reader assembly and movement of said scale is electro-optically detected by said reader assembly;
f. a retractor secured to said probe and having a portion external of said handle and operable by said hand holding said handle for manually moving said probe away from said anvil against the bias of said spring;
g. electronic circuitry and a digital display cooperatively responsive to said reader assembly for indicating positions of said probe relative to said frame;
h. said electronic circuitry including manually actuatable hold circuitry for maintaining said display at an indication of a previous position of said probe after movement of said probe from said previous position; and
i. a switch arranged on said handle to be manually accessible by said hand holding said handle for actuating said hold circuitry.

4,062,121
DEVICE FOR COMPARING THE DIMENSIONAL PROPORTIONS OF TAPERED OBJECTS
Joseph Nicholas Fried, and Jelena Maria Fried, both of 1691 Coventry Road, Cleveland Heights, Ohio 44118
Filed June 23, 1976, Ser. No. 699,043
Int. Cl.² G01B *3/22, 5/00*
U.S. Cl. 33—169 R **10 Claims**

1. A device for comparing the dimensions of at least two tapered objects, such as musical instrument reeds, each having opposed major surfaces and side edges extending in its elongated direction, comprising a substantially flat and smooth base

member for slidably supporting a first object upon one of said first object's, major surfaces and for slidably supporting at least a second object upon said second object's corresponding major surface, a first thickness sensor and at least a second thickness sensor, extending towards said base member from predetermined, fixed positions on a member mounted on the device to be movable in a direction essentially perpendicular to said base member, so that the movement of either of said thickness sensors imparts a proportional movement movement through said movable member to the other thickness sensor, said thick-

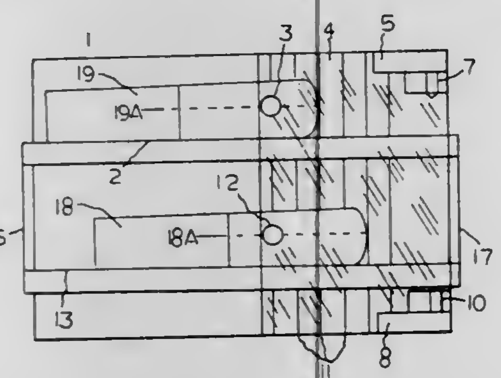

ness sensors always being substantially equidistant from said base member, first reference means on the device by which said first thickness sensor contacts said first object on a point along a longitudinal line on its surface and said second thickness sensor contacts said second object on a point along a line on its surface which is parallel to and corresponding to said longitudinal line on said first object, there being at least one such pair of corresponding lines, and second reference means on the device for comparing and measuring the longitudes of said tapered objects beyond points of equal thickness, as located by said thickness sensors.

4,062,122
FIXTURE FOR SETTING THE STATIONARY GAGING CONTACT ON A DIAL BORE GAGE
Harold T. Rutter, Kirkwood, Mo., assignor to Sunnen Products Company, St. Louis, Mo.
Filed Jan. 17, 1977, Ser. No. 759,843
Int. Cl.² G01B *5/00*
U.S. Cl. 33—169 R **12 Claims**

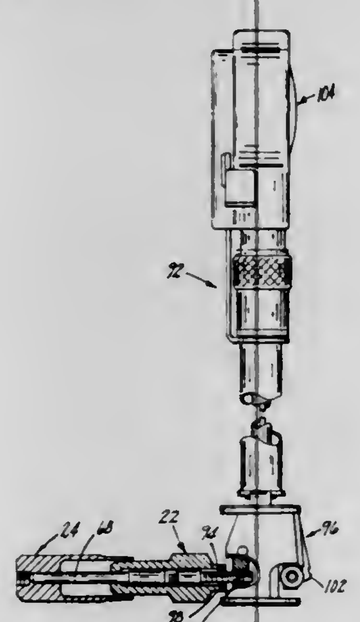

1. A fixture for setting and locking a male threaded member in a predetermined extended position from a threaded opening in a structure, a locking member threadedly mounted on the male threaded member and movable thereon into locking engagement with the structure to lock the male threaded member in position thereon and prevent relative movement between the male threaded member and said structure, said setting fixture comprising first and second relatively movable members, said first relatively movable member having a bore therein and said second relatively movable member having a portion thereon which extends into said bore, cooperating means on said first and second relatively movable members engageable to permit relative axial and rotational movement therebetween, said second relatively movable member having means thereon for cooperatively engaging the locking member to enable rotation of the locking member between a locked position engaging the structure and an unlocked position out of engagement therewith, said first relatively movable member having means thereon for cooperatively engaging the male threaded member for movement in concert therewith during adjustment, said first and second relatively movable members being simultaneously engageable respectively with said male threaded member and with said locking member, and cooperating relatively movable indicating means on said first and second relatively movable members, said indicating means being calibrated to indicate the extended position of the male threaded member relative to the locking member for all relative positions of the first and second relatively movable members when said members are simultaneously respectively engaged with said male threaded member and with said locking member.

4,062,123
ADJUSTABLE ROUTING TEMPLATE
Ray Arnold Lundquist, 2571 - 24th Ave. North, St. Petersburg, Fla. 33713
Filed Sept. 7, 1976, Ser. No. 721,033
Int. Cl.² B27C *5/00*
U.S. Cl. 33—174 G **8 Claims**

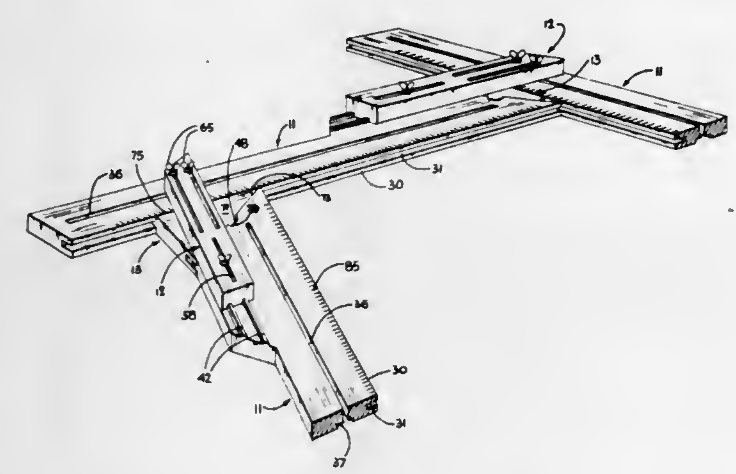

1. An adjustable routing template for use in guiding a cutting tool, such as router, for the routing of grooves, recesses, ledges, steps and the like in a work piece, such as a cabinet door, the template comprising, in combination:
- a plurality of substantially identically constructed longitudinally elongated rigid bar members;
- a plurality of substantially identically constructed longitudinally elongated rigid connecting link members;
- there being at least one connecting link member for each bar member;
- a plurality of block members, there being at least one block member for each one of said bar members, each block member being detachably held between adjacent bar members in a position adjacent the associated link member;
- means connecting each of said link members to their associated bar member;
- means adjustably connecting each of said link members to an associated adjacent one of said bar members for adjustably slidably interconnecting each link member to the associated adjacent bar member to permit longitudinal adjustment of the bar member with respect to the link member;
- each of said bar members comprising, in combination:
  - a flat horizontal top surface;
  - a flat horizontal bottom surface;
  - a flat vertically extending foot end;

  - a flat vertically extending inside edge;
  - a flat vertically extending front end extending outwardly and rearwardly from the inside flat edge;
  - a flat outer edge having one end joined to the front end and extending rearwardly therefrom parallel to said inside edge;
  - a further outer edge extending forwardly from said foot end parallel to said inside edge;
  - a tapered shoulder outside edge interconnecting said first and said second mentioned outer edges;
  - an adjustment slot extending longitudinally through said top surface terminating inwardly of said foot end and said front end thereof and in communication with said flat bottom surface;
  - a longitudinally extending channel disposed in said inside flat edge and extending completely between the foot end and the front end thereof;
  - a flat tongue member extending along said front end and projecting horizontally outwardly therefrom;
  - a pair of transversely spaced apart longitudinally extending parallelly disposed guide rails affixed to said top surface and extending parallel to said inside flat edge, said guide rail disposed on said flat top surface on the opposite side of said adjustment slot from said inside flat edge; and
  - an opening disposed intermediate said guide rails extending through said top and bottom surfaces.

4,062,124
APPARATUS FOR MEASURING ERRORS IN CONCENTRICITY RELATIVE TO TWO SURFACES OF ROTATION
Gastone Albertazzi, Bologna, Italy, assignor to Finike Italiana Marposs Soc. In Accomandita Semplice di Mario Possati & C., Bentivoglio, Italy
Filed June 2, 1976, Ser. No. 692,187
Claims priority, application Italy, June 19, 1975, 3458/75
Int. Cl.² G01B *5/25*
U.S. Cl. 33—174 Q **9 Claims**

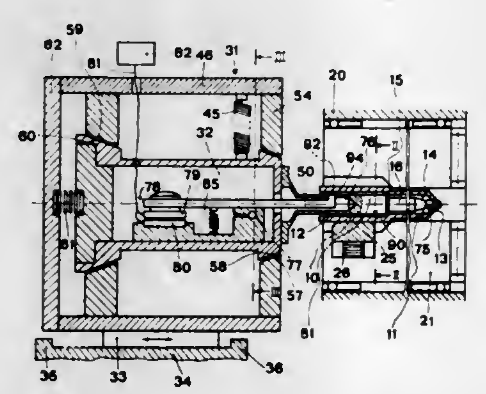

1. Apparatus for measuring errors in concentricity relative to first and second nominally coaxial surfaces of rotation which define a hole in a mechanical part, comprising a first support for the part, a second support, a first mechanical reference means supported by said second support to cooperate with the first of said surfaces of rotation, measurement means coupled with said first mechanical reference means to cooperate with the second surface of rotation and effect dimensional measurements thereon, a second mechanical reference means supported by said second support and rigidly connected to said first mechanical reference means, floating connecting means and thrust means arranged between said first mechanical reference means and said second mechanical reference means and said second support to permit simultaneously the first said mechanical reference means to remain in contact with the first surface of rotation and said second mechanical reference means to cooperate with at least one point of a first section of said second surface of rotation, rotatable means adapted to produce a substantially rotary relative movement between the part and said second support; and processing and indicating means connected to said measurement means, said measurement means comprising a measuring device mechanically coupled with said first reference means and said second reference means to carry out, during said relative motion, dimensional measurements on a second section of said second surface of rotation, said measuring device including an arm having at least one degree of freedom with respect to said first and second mechanical reference means, a feeler fastened to said arm to enter into contact with a point of said second section of said second surface of rotation, and a transducer adapted to provide signals responsive to the linear dimensions of said second section.

4,062,125
APPARATUS FOR TESTING THE TOOTH FLANKS OF INVOLUTE GEARING
Oskar Maag, Zurich, Switzerland, assignor to Maag Gear-Wheel & Machine Company Limited, Zurich, Switzerland
Filed Apr. 12, 1976, Ser. No. 675,821
Claims priority, application Switzerland, Apr. 17, 1975, 4900/75
Int. Cl.² G01B *7/28*
U.S. Cl. 33—179.5 D **4 Claims**

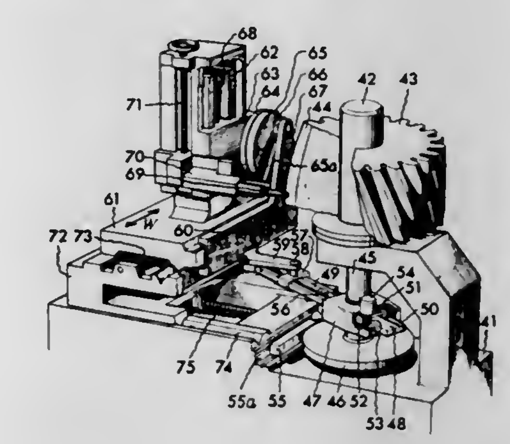

1. Apparatus for testing the tooth flanks of involute gearing comprising test gear support means providing a rotary axis for a gear under test, a generating rolling cylinder connectable to said support means for rotation therewith, a rolling straightedge mounted for slip-free rolling movement with said cylinder, a first slide mounted for displacement parallel to said rotary axis, a tooth flank sensor for said gear under test supported on said slide, and a guide carrier on said first slide supporting a guide track in an adjustable manner for locating said guide track at an adjustable oblique angle to said rotary axis, a rolling slide displaceable parallel to said rolling straight edge, said first slide with said sensor and guide carrier being mounted for displacement with said rolling slide, an auxiliary slide on said rolling slide and displaceable relative thereto parallel to said rolling straight-edge, follower means carried by said auxiliary slide engaging said guide track, a lever having a first pivot connection with the rolling cylinder comprising means permitting the lever to pivot around the axis of said cylinder, the lever having a second pivot connection with said rolling straight-edge and a third pivot connection with the auxiliary slide, said lever thereby interconnecting the movements of the rolling slide and of the sensor with the rolling straight-edge, the cylinder and the gear under test, means being provided for relative displacement of the third pivot connection with respect to the first and second pivot connections for the variable setting of the transmission ratio of said auxiliary slide to the rolling movements, said pivot connections comprising sliding guide means whereby the lever is mounted to be longitudinally displaceable with respect to all three said pivot connections.

4,062,126
DEADBAND ERROR REDUCTION IN TARGET SIGHT STABILIZATION
Peter J. O'Hara, Denville, and Louis P. De Leo, Totowa Borough, both of N.J., assignors to The United States of America as represented by the Secretary of the Army, Washington, D.C.
Filed Nov. 8, 1976, Ser. No. 739,395
Int. Cl.² F41G *3/00*
U.S. Cl. 33—236 **3 Claims**

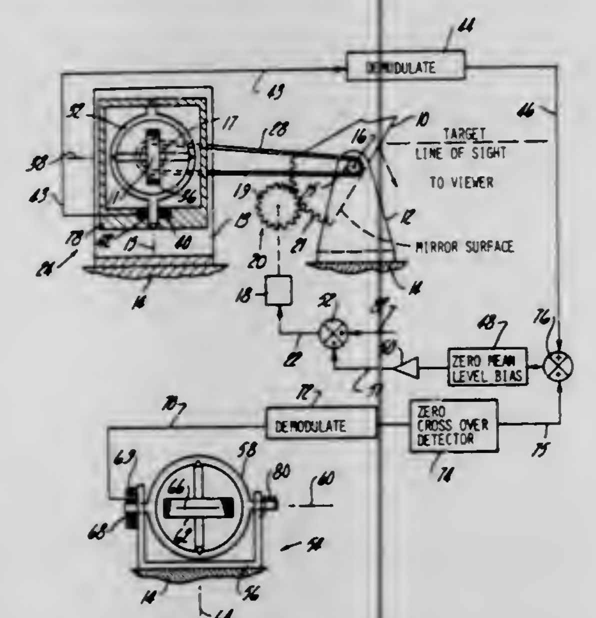

1. A sight element stabilization system for a military ground vehicle designed to traverse rough terrain comprising a vehicle-mounted sight element mounted for pivotal movement about a generally horizontal axis and subject to reciprocatory dislocation about said axis by the terrain disturbances; a reversible torque motor drivingly connected to the sight element to minimize the reciprocatory dislocations; and control means for the motor; said control means comprising a first gyroscope mechanically connected to said sight element for generating a first time-variant signal related to the terrain-generated dislocation of the sight element, a second gyroscope positioned within the vehicle to respond to the same terrain disturbances that produce reciprocatory dislocations of the sight element, said second gyroscope being constructed to generate a second time-variant signal related to the terrain-generated dislocation of the vehicle, a zero crossover detector converting the second signal into a square wave signal, and signal summation means combining the first signal and square wave signal into a motor control signal for driving said torque motor.

4,062,127
METHOD FOR THE CONTINUOUS DRYING OF WET, GRANULAR AND/OR LUMPY MATERIALS AND DEVICE FOR CARRYING OUT THE METHOD
Roland Pfeiffer, Bensberg-Frankenforst; Wilhelm Bongert, Bochum, and Heinz-Dieter Waldhecker, Bensberg-Refrath, all of Germany, assignors to Klockner-Humboldt-Deutz Aktiengesellschaft, Germany
Filed June 30, 1975, Ser. No. 591,843
Claims priority, application Germany, July 1, 1974, 2431522
Int. Cl.² F26B *3/34*
U.S. Cl. 34—1 **5 Claims**

1. In a method for the continuous drying of moist-to-dripping wet, granular and/or lumpy materials, particularly foodstuffs, in which a vibrating feed chamber is provided with a material inlet and a material outlet and with a heating gas inlet device and a heating gas outlet device, the improvement therein comprising the steps of:

applying microwave energy as drying energy to the material in a first drying step, including the steps of generating microwave energy at a fixed point outside of said chamber, and flexibly coupling the microwave generator to the chamber to isolate the microwave generator from vibration and to prevent the escape of microwave energy; and

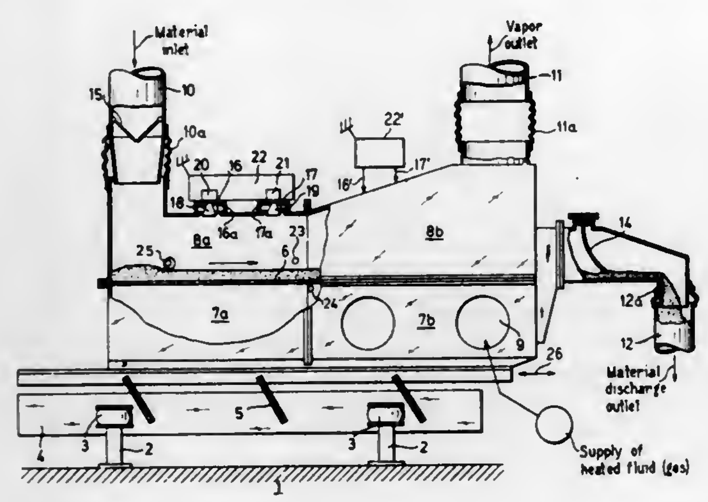

applying hot gases to the material as the drying energy in a second drying step.

4,062,128
COTTON DRYING APPARATUS
Woodrow W. Bledsoe, Upper Lenox Road, Rte. 3, Dyersburg, Tenn. 38024
Filed Jan. 23, 1976, Ser. No. 651,923
Int. Cl.² F26B *17/10*
U.S. Cl. 34—57 R **6 Claims**

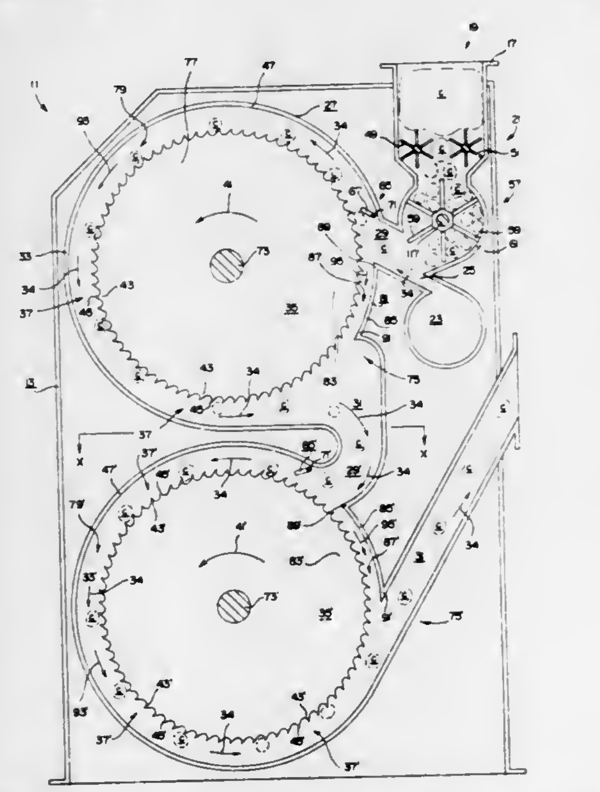

1. Apparatus for removing a certain amount of moisture from moisture laden cotton bolls, said apparatus comprising framelike housing means, a prime mover for rotatably driving certain structure of said apparatus, hopper means including inlet duct means for receiving the moisture laden cotton bolls and means operably coupled to said prime mover for dispensing the cotton bolls from said hopper means, a source of air pressure including nozzle means disposed adjacent said hopper means; plenum means disposed within said housing means and including an ingress section communicated with said source of air pressure, an egress section leading outwardly from said housing means, and a midsection interconnecting said ingress and egress sections; the bolls of cotton dispensed from said hopper means being picked up and pneumatically conveyed through said ingress section and toward said midsection by an airstream being developed by said source of air pressure, and means disposed within said midsection for engaging the bolls of cotton, for suspending the bolls of cotton in the airstream and for controllably retarding the movement thereof through said midsection while the rushing air is free to pass uninterruptedly through the interstices of the bolls of cotton thus causing a certain amount of moisture to be removed therefrom, and wherein said means for engaging the bolls of cotton includes a plurality of pointed teeth for impaling the bolls of cotton to suspend the bolls of cotton in the airstream.

4,062,129
ARRANGEMENT FOR PREPARING HOT COMPRESSED AIR OF REDUCED MOISTURE CONTENT SUITABLE FOR USE IN OPERATION OF BLAST FURNACE
Toru Yoshida, Hachioji; Kameo Hosoi, Warabi; Tokuzo Yoshida, Oita; Kazuyuki Shimizu, Bungotakada, and Koithiro Nakagawa, Oita, all of Japan, assignors to Takasago Thermal Engineering Co., Ltd. and Nippon Steel Corporation, both of Tokyo, Japan
Filed Aug. 2, 1976, Ser. No. 710,679
Int. Cl.² F26B *21/06*
U.S. Cl. 34—80 **13 Claims**

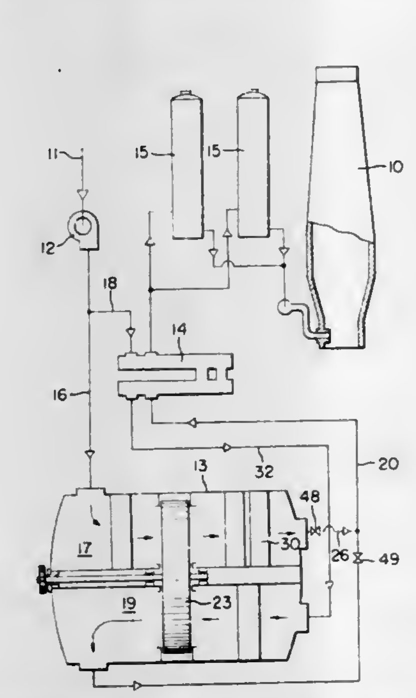

1. An arrangement for preparing hot compressed air of a reduced moisture content suitable for use in operation of a blast furnace, comprising a conventional blower designed for use in the operation of a blast furnance and one or more conventional hot air furnaces, said blower and said hot air furnaces being so arranged that a passage of air to be supplied to said blast furnace is adapted to be formed from said blower via said hot air furnaces to said blast furnace, characterized in that into the air passage located between said blower and said hot air furnaces there are incorporated:

a dehydrater assembly comprising a gas permeable rotor containing a regenerative hygroscopic substance impregnated therein and at least one cooler for condensing the mộisture in the air;

a heat exchanger arranged so that a part of all of hot compressed air coming from said blower may transfer its sensible heat to the dehydrated air coming from said dehydrater assembly;

means for passing the remainder of all of the hot compressed air coming from said blower to said dehydrater assembly; and

means for passing all the dehydrated air coming from said dehydrater assembly to said heat exchanger, whereby all the air to be introduced into said hot air furnaces is caused to pass through said dehydrater assembly and heat exchanger, and be dehydrated.

4,062,130
MECHANISM MODELING
George A. Wood, Giles Road, R.F.D 1, Lincoln, Mass. 01773, and Louis E. Torfason, 147 Claremount Drive, Fredericton, New Brunswick, Canada (E3A1E7)
Filed July 8, 1976, Ser. No. 703,672
Int. Cl.² G09B *25/02*
U.S. Cl. 35—13 **3 Claims**

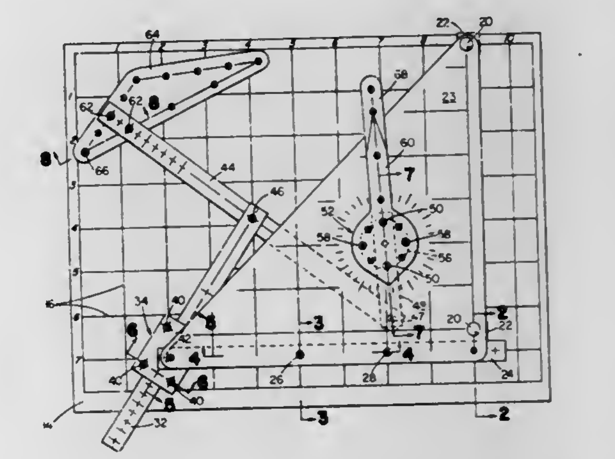

1. A mechanism modeling kit in which flat non-metallic simulations of machine elements may be assembled into demonstration working elements for designing machinery and teaching the design thereof comprising at least one sheet, said sheet being pre-cut to provide punchable machine elements and links of different sizes and shapes, hollow grommets for heading in assembly of said elements and links, a grommet heading tool for tighteningly heading said grommets, wherein said grommets are loosely headed around at least one element and one link for pivotal movement thereof, said tool including a frame, an anvil and a crimping element supported by said frame, said crimping element being rotatably mounted in said frame for controllable crimping movement toward said anvil.

4,062,131
INSOLES FOR FOOTWEAR
Du Yung Hsiung, Park Forest, Ill., assignor to Scholl, Inc., Chicago, Ill.
Filed Sept. 10, 1976, Ser. No. 722,127
Int. Cl.² A43B *13/38*
U.S. Cl. 36—44 **7 Claims**

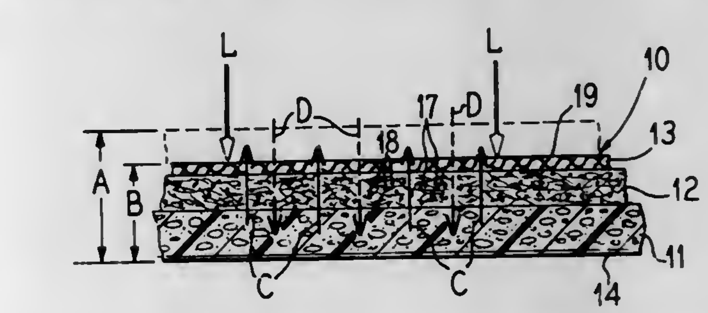

1. An insole for footwear which comprises a multi-layer laminate shaped to overlie the inner sole of footwear and composed of a bottom open cellular resilient plastics sheet with a relatively closed pore smooth bottom skin for resting on the inner sole of the footwear, an intermediate porous sheet of randomly disposed fibers impregnated with a moisture-absorbing and foot-odor absorbing chemical freely exposed on the fibers, a top porous woven fabric sheet presenting a slippery abrasion resisting top surface, and air pervious bonding means uniting the bottom sheet to the intermediate porous sheet and the intermediate porous sheet to the top porous woven fabric sheet without closing the pores at the bond areas so that said bottom sheet alternately flattens and expands upon application and release of foot pressure on the insole to pump air and vapor in the footwear through the intermediate sheet in intimate

contact with the chemical for absorption of moisture and foot odors.

4,062,132
FOOTWEAR HAVING REPLACEABLE HEEL AND SOLE
Chester Klimaszewski, 84 Farview Drive, Cheshire, Conn. 06410
Filed Sept. 8, 1976, Ser. No. 721,596
Int. Cl.² A43B *3/24*
U.S. Cl. 36—100 **3 Claims**

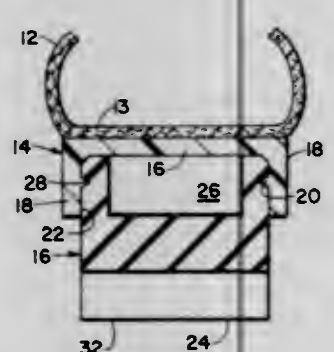

1. Footwear comprising a replaceable tread portion having a lower treading surface and including first means disposed opposite said treading surface and having an outer peripheral surface, a body portion receptive of a person's foot during use and having a lower surface and including second means fixedly connected to said lower surface and receptive of the outer peripheral surface of said first means and engagable therewith for releasably locking said first means therein to prevent both lateral and perpendicular movement of the tread portion with respect to said body portion, said tread portion including a heel and a sole, wherein the peripheral surface of said first means is aligned with the peripheral surface of the heel and sole, said first means includes a hollowed member composed of resilient material and projecting oppositely from said treading surface, means defining a plurality of gripping apertures in the outer peripheral surface of the hollowed member, said second means including a base member on said lower surface and a flange extending outwardly therefrom and configured to closely receive said hollow member and a plurality of gripping members disposed on the inner peripheral surface of said flange and disposed in alignment with said gripping apertures and receivable therein when the hollow member is received in the flange.

4,062,133
BOOT WITH HINGED UPPER
Charles Donald McGee; Charles S. French, and David T. Robran, all of Ketchum, Idaho, assignors to Scott USA, Inc., Sun Valley, Idaho
Filed Sept. 13, 1976, Ser. No. 723,022
Int. Cl.² A43B *5/04*
U.S. Cl. 36—120 **23 Claims**

1. A hinged boot comprising:

a vamp shell having an upper portion defining a foot receiving opening with a plurality of extending front fingers and a plurality of extending rear fingers, each of the extending fingers being deflectable,

an upper shell formed of a generally rigid material and having a lower region which overlaps generally the entire upper portion of the vamp shell, the lower region having front and rear inner surfaces respectively adjacent the plurality of front and rear fingers, and

hinge means interconnecting the lower region of the upper shell to the vamp shell to cause the inner surfaces of the

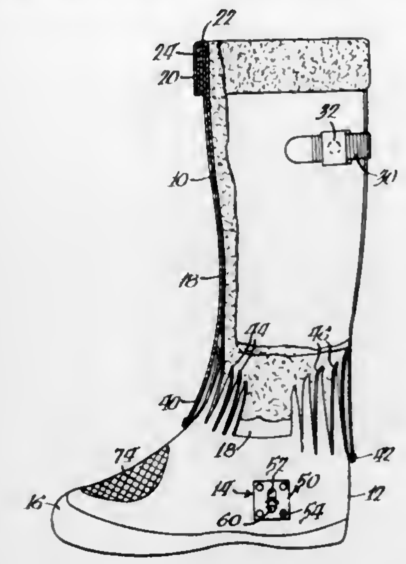

upper shell to deflect the plurality of extending fingers as the upper shell is pivoted forwardly and rearwardly.

4,062,134
TOE CLIP FOR SKI BOOTS
Gary R. Ryder, 663 Linda Ave., Salem, Oreg. 97303
Filed Nov. 15, 1976, Ser. No. 741,554
Int. Cl.² A43B *5/04, 13/22*
U.S. Cl. 36—132 **5 Claims**

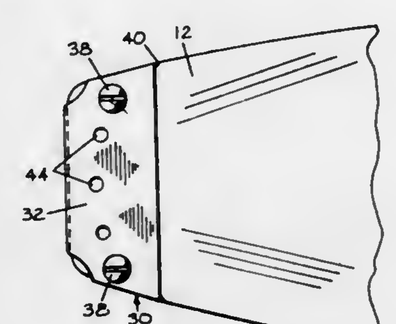

1. A toe clip arranged for use with a ski boot of the type having a sole with opposite surfaces and which projects beyond the boot at a front portion of the boot, the sole having at least one binding hole in a surface thereof adjacent the front for receiving a stabilizing pin integral with a ski binding, said toe clip comprising

a. a plate-like body member arranged to lie flat along a surface of the sole of a boot adjacent the front and over the binding hole which receives a stabilizing pin,
b. means arranged to secure said body member on a ski boot,
c. and means defining an aperture in said body member arranged to be aligned with a binding hole in the sole of a ski boot upon securement of said body member on a boot whereby said toe clip is arranged to reinforce the binding hole against lateral wear resulting from connection between a ski binding and the boot.

4,062,135
SAFE OPERATION CONTROL FOR A SNOWBLOWER
Dale Rudolph Dobberpuhl, Horicon, Wis., assignor to Deere & Company, Moline, Ill.
Filed Oct. 4, 1976, Ser. No. 729,371
Int. Cl.² B60K *26/00;* **F02P** *1/00*
U.S. Cl. 37—43 R **3 Claims**

1. In combination with a snowblower having a mobile frame, a handlebar assembly coupled to the frame and extending rearwardly therefrom, a collector-impeller assembly coupled to the frame and located forwardly thereof, an internal combustion engine mounted on the frame and having a magneto ignition system and an output shaft, a selectively engageable and disengageable traction drive coupled to the output shaft for propelling the frame, a traction drive control lever coupled to the traction drive and mounted on the handlebar assembly for movement between drive-disengage and drive-engage positions, a biasing means coupled to the traction drive control lever and urging it to its drive-disengage position, the collector-impeller assembly including a selectively engageable and disengageable collector-impeller drive coupled to the output shaft, and a collector-impeller drive control lever coupled to

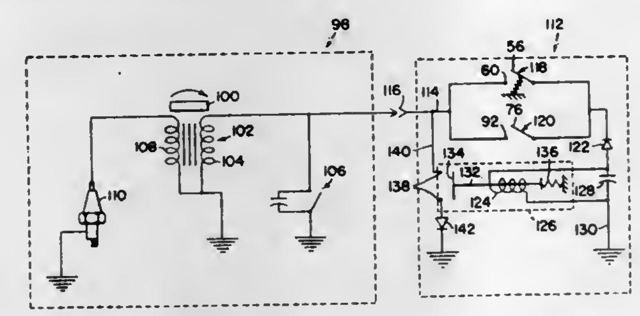

the collector-impeller drive and mounted on the handlebar assembly for movement between drive-disengage and drive-engage positions, a safety module, comprising: electrical circuit means coupled to the ignition system and including first and second switch means respectively operable in response to movement of said traction drive control lever and said collector-impeller drive control lever for effecting a condition disabling the ignition system only when the traction drive control lever is in its drive-disengage position and the collector-impeller drive control lever is in its drive-engage position.

4,062,136
SCRAPER VEHICLE
Douglass W. Steiger, Thief River Falls, Minn., assignor to Toreq, Inc., Thief River Falls, Minn.
Filed Sept. 27, 1976, Ser. No. 727,269
Int. Cl.² E02F *5/00*
U.S. Cl. 37—126 AE **3 Claims**

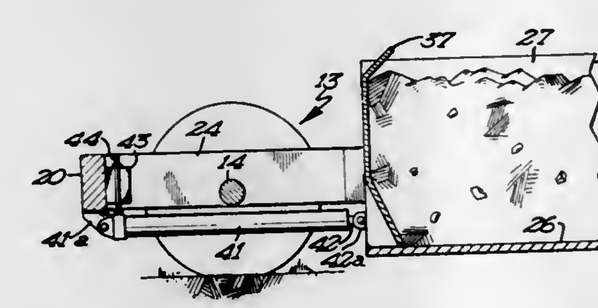

1. A scraper type vehicle comprising a body including side walls, a bottom wall, and an open front end, the bottom wall having a leading transverse edge defining a digging edge,

a gate swingably mounted on said body for swinging movement between a closed position obstructing the open front end, and an open position wherein the gate is swung to a nonobstructing position with respect to the open front end of the body,

means for shifting the gate between open and closed positions,

a pair of rear ground engaging wheels and a front ground engaging wheel assembly for supporting the body for travel over the surface of the ground,

a vertical apron positioned within said body extending transversely thereof and being shiftable longitudinally of said body between a retracted rearward position adjacent the rear end thereof and a forward position adjacent the front end of said body to progressively urge material within the body outwardly of the open front end,

power means mounted on said body and engaging said apron to shift the latter between rearward and forward positions,

and an extensible and retractable power assist mechanism mounted including a cylinder on said body and having a piston moveable therein, a piston rod secured to said piston and connected with said apron, said piston rod being extensbile and retractable relative to said cylinder, a helical spring in said cylinder engaging said piston to normally urge the piston rod in a direction to input energy to said apron, said piston rod being in a retracted energy storing condition when the apron is in its rearward position and being in an extended position when the apron is in the completely forward position, said piston rod transmitting the stored energy in the helical spring to said apron when the latter is urged forwardly by said power means to thereby assist forward movement of the apron in a forward direction.

4,062,137
INVENTORY-CONTROL MERCHANDISE DISPLAY APPARATUS
Milton W. Herzog, Valley Stream, N.Y., assignor to H. Goodman & Sons, Inc., Kearny, N.J.
Filed May 27, 1975, Ser. No. 580,560
Int. Cl.² A47F *5/00*
U.S. Cl. 40—19.5 **20 Claims**

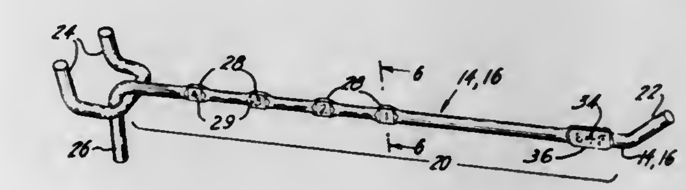

1. Merchandise display apparatus adapted for use in an inventory control system, including a support, and an elongated arm of essentially uniform cross-section at least along most of its length, said arm having at a supported end thereof means for securing the arm to the support so that the arm projects in cantiliver fashion with a free end exposed for readily entering openings in a series of merchandise-bearing cards, plural demarcation means distributed along the arm for providing a measure of the quantity of merchandise-bearing cards carried by the arm, and said arm including an elongated label portion substantiallly longer than its maximum transverse dimension remote from the supported end of the arm serially connected to the remainder of the arm, said label portion bearing at least one character and being adapted to bear plural characters distributed therealong for enabling the arm to be related to any one of many kinds of mechandise-bearing cards, the maximum transverse dimension of the whole arm including its plural demarcation means and its label portion being no more than moderately larger than the maximum transverse dimension of said essentially uniform cross-section of the arm for readily being received in openings of the merchandise-bearing cards.

4,062,138
CARD FORMING PEDESTAL DISPLAY DEVICE
Melvin S. Warenback, 595 Las Colindas Road, San Rafael, Calif. 94903
Filed May 17, 1976, Ser. No. 687,295
Int. Cl.² G09F *1/00*
U.S. Cl. 40—124.1 **14 Claims**

1. A four sided single sheet card formable into pedestal supporting display comprising a single thickness of sheet material of suitable shape to provide said card, said sheet material having a predetermined pattern of cuts and fold lines for defining:

a. a top portion of said card including a label section and a top tab, said label section being joined to said top tab along a first transverse fold line;
b. opening means for providing a transverse opening within said top portion of said card;
c. a left section connected to said top portion along a second

transverse fold line, said left section extending downwardly therefrom along the left edge of said card and having left transverse crease lines means for dividing said left section into at least two vertically arranged segments;

d. a right section connected to said top portion, said second fold line, said right section extending downwardly therefrom along the right edge of said card and having right transverse crease line means for dividing said right section into at least two vertically arranged segments each of which substantially corresponds to a similarly located segment of said left section;

e. a display section between said left and right sections and below said top portion of said card and severable from said top portion, said left section and said right section;

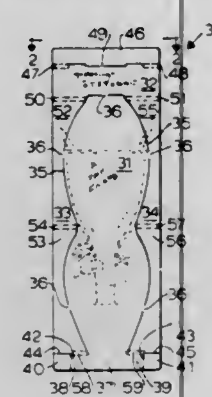

f. a bottom portion of said card at the bottom of said display section and rigidly integral therewith, said bottom portion having a bottom tab and left and right lateral portions extending beyond said display section, said left portion being joined along a third fold line to said left section, said right portion being joined along said third fold line to said right section along an eighth crease line,

whereby said card may be formed into said pedestal supported display by detachment of said display portion, outward folds along all said crease lines, placement of said label section adjacently below said display section to form said display and insertion of said bottom tab through said opening means to interlock said pedestal.

4,062,139

ERECTABLE SIGN FOR INDICATING EMERGENCY IN MOTOR VEHICLE TRAFFIC

Georg W. Klösel, Falkensteiner Strasse 12, 624 Konigstein, Germany

Filed Dec. 1, 1976, Ser. No. 746,333

Claims priority, application Germany, Nov. 20, 1975, 7536870

Int. Cl.² G09F *1/06, 21/04*

U.S. Cl. 40—129 C **4 Claims**

1. Erectable board structure for signalling distress in situations involving motor vehicle traffic comprising two stiff boards so interconnected as to be relatively displaceable at an angle of nearly about 360°, fastening means being provided for holding said boards in a folded condition for transport and in an erected condition so as to form a V-shaped structure on base means for placing on a vehicle, characterized in that near the interconnection (6) of both said boards (2,3), several selectable printed information sheets (5) are so secured that said sheets may be turned at an angle of approximately 360°, whereby the sheets selected for display on said vehicle indicate the nature of the distress faced by the motorist.

4,062,140

SLIDE MOUNT

Herbert Meyer, and Heinz Schienagel, both of Ansbach, Mfr., Germany, assignors to Bellman & Co. K.G., Ansbach, Mfr., Germany

Filed Oct. 12, 1976, Ser. No. 731,768

Claims priority, application Germany, Oct. 9, 1975, 2545300

Int. Cl.² G09F *1/12*

U.S. Cl. 40—152 **4 Claims**

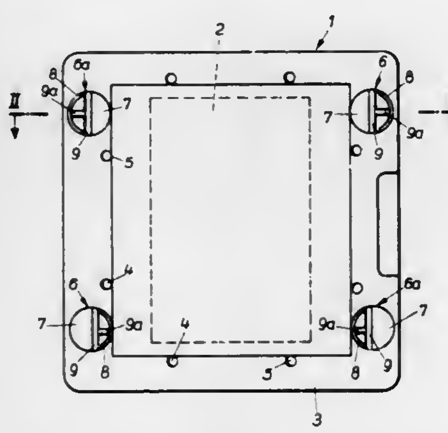

1. A slide mount comprising a pair of substantially identically constructed frame halves, each frame half comprising a surface which, in the assembled condition of the mount, faces the other frame half and a plurality of interlocking elements on said surface for engaging with corresponding interlocking elements of the other frame half for positively interlocking the frame halves with one another, each interlocking element comprising mutually adjacent complementary male and female portions adapted to engage with female and male portions respectively of the corresponding interlocking element on the other of the frame halves, each female portion comprising means defining a part-cylindrical recess in said surface and each male portion comprising a hollow part-cylindrical portion and a web portion extending chordally of the hollow part-cylindrical portion and the web portions being disposed such that once the frame halves are interlocked, the web portions of corresponding, interlocked elements contact one another.

4,062,141

DECOY

Jelmer B. Shjeflo, 516 N. 23 St., Bismarck, N. Dak. 58501

Filed Oct. 27, 1976, Ser. No. 736,148

Int. Cl.² A01M *31/06*

U.S. Cl. 43—3 **1 Claim**

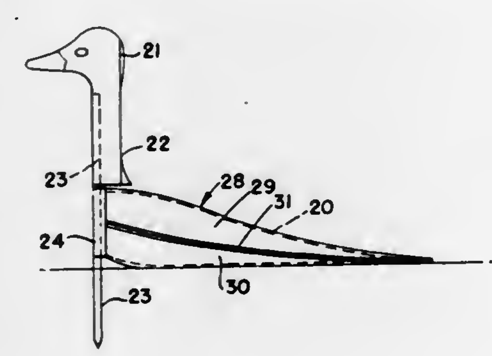

1. A decoy comprising a head portion having a neck portion

therebeneath and made of relatively rigid material, a hoop member attached to the bottom of the neck portion and extending downward therefrom, a spike attached to the bottom of the hoop and projecting downward therefrom, said spike being adapted to be inserted into the ground, said head and neck portions simulating the head of a water fowl, a flexible bag having a wind sock construction with an opening at the front end with the edges of the bag adjacent the opening fixed to the hoop to keep and maintain the opening in an open condition, the bag having flared out center portions, a tapered rearward portion, whereby when the decoy is positioned so that the opening in the bag is facing into the wind, the wind will inflate the bag so that the bag will give the appearance of the body of a water fowl with the flared out center portions giving the appearance of the folded wings of the decoy, and the tapered rearward portion giving the appearance of the tail of the water fowl.

4,062,142

TRAPPING AND KILLING APPARATUS FOR MICE AND OTHER ANIMALS

David Lee Marotti, P.O. Box 33, Earle, Ark. 72331

Filed Oct. 22, 1976, Ser. No. 735,095

Int. Cl.² A01M *23/18*

U.S. Cl. 43—61 **10 Claims**

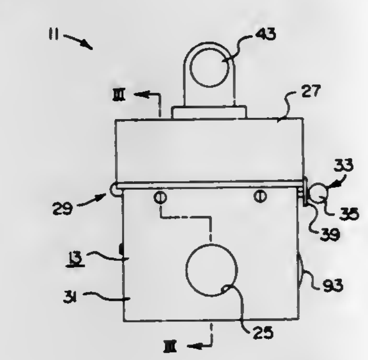

1. An apparatus for trapping and killing animals, said apparatus comprising:

a. a hollow, boxlike housing member for holding an animal, said housing member having an entrance opening for allowing the animal to enter the interior of said housing member therethrough;

b. door means for selectively blocking said entrance opening in said housing member;

c. electric motor means for causing said door means to move from a first position away from said entrance opening so that an animal can enter the interior of said housing member through said entrance opening, to a second position blocking said entrance opening so that any animal within the interior of said housing member will be trapped therein;

d. a source of electric power for causing said motor means to move said door means from said first position to said second position;

e. circuit means for allowing electric power from said source of electric power to selectively pass to said motor means;

f. poison means for allowing a poison to be introduced into the interior of said housing member to kill any animal trapped therein; and

g. means for indicating the body temperature of any animal trapped within the interior of said housing member to thereby indicate whether the animal is dead or alive.

4,062,143

BUBBLE GENERATOR

Victor S. Lerman, Malden, Mass., assignor to Amalgamated Enterprises, Malden, Mass.

Filed Aug. 12, 1976, Ser. No. 713,929

Int. Cl.² A63H *33/28*

U.S. Cl. 46—6 **8 Claims**

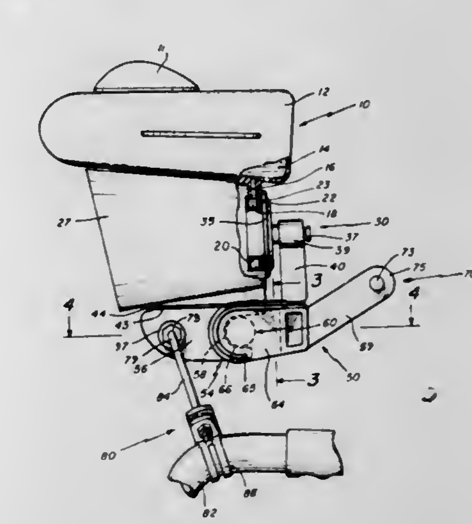

1. In a device for generating bubbles comprising

a ring across which a liquid film may be formed,

means for directing a flow of air through said ring for forming a stream of bubbles from said film, and

a priming means selectively engageable with said ring for priming said ring for formation of said bubbles,

the improvement comprising means pivotally supporting said priming means for movement to and from engagement with said ring, and

a lever means rigidly engaged with said means pivotally supporting said priming means for operative control thereof.

4,062,144

FLEXIBLE DOLL HAVING ARM MEMBERS PIVOTABLE TO PLURAL STABLE POSITIONS

John E. Holden, Mount Joy, Pa., and Brian S. Prodger, Barrington, R.I., assignors to Hasbro Development Corporation, Pawtucket, R.I.

Filed Apr. 21, 1976, Ser. No. 679,040

Int. Cl.² A63H *3/04*

U.S. Cl. 46—151 **7 Claims**

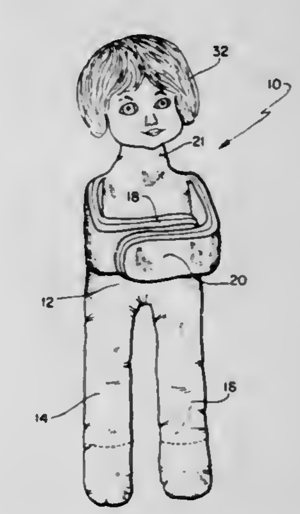

1. A doll construction comprising a relatively flexible body to which leg members and arms are joined, an arm assembly located in said body adjacent to the upper end thereof and extending outwardly of the body into said arms to define therewith arm members, said arm assembly being defined by an elongated strap formed separately from said body and arms of a relatively rigid plastic material and including a plurality of spaced, hingedly connected segments that are selectively pivotal to locate the arm members in a variety of stable positions

from fully open to fully closed, said strap having reduced portions formed along the length thereof that extend transverse to the longitudinal axis of said strap and that define hinge connections for separating said strap into the spaced segments, and a plurality of spring arms integrally formed on said strap and being selectively and hingedly movable to locate a said segment in a selected stable position.

4,062,145
MULCH CARPET AND METHOD FOR MAKING SAME
Lester Gidge, Nashua, N.H., assignor to Terra-Tex Corporation, Nashua, N.H.
Continuation-in-part of Ser. No. 601,275, Aug. 4, 1975, abandoned, which is a continuation-in-part of Ser. No. 433,861, Jan. 16, 1974, abandoned, which is a continuation-in-part of Ser. No. 160,425, July 7, 1971, abandoned. This application Dec. 20, 1976, Ser. No. 752,795
Int. Cl.[2] A01G *7/00*
U.S. Cl. 47—9 **11 Claims**

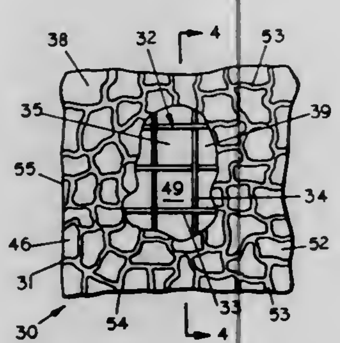

1. A mulch carpet for covering, and conforming to the shape of, the ground adjacent trees or plants to inhibit weed growth while promoting tree and plant growth said carpet comprising:
a unitary, multi-layered, flexible, opaque, web, having
a central, water permeable backing sandwiched between, and firmly bonded to, an upper layer and a lower layer;
said upper and lower layers being formed of ground bark particles, unified by, and each substantially encapsulated in, a thin coating of resin binder, the coated bark particles being adhered to each other by said binder; having interstices therebetween for the percolation of water therethrough and being uncompressed to preserve their natural insulation properties.

4,062,146
SHADE PRODUCING SYSTEM
Harold Grossman, Chicago, and Sherman Mandel, Wilmette, both of Ill., assignors to Simtrac Inc., Chicago, Ill.
Filed Dec. 6, 1973, Ser. No. 422,185
Int. Cl.[2] A01G *9/00*
U.S. Cl. 47—17 **4 Claims**

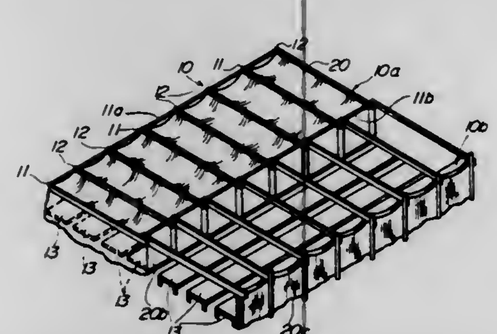

1. A shade system for shading an area in a greenhouse comprising:
a. a frame
b. powered track means comprisng a hollow column and magnetic capsule disposed therein supported by said frame;
c. suspension track means laterally spaced from, parallel to and coextensive with said power track means and supported by said frame;
d. a shade producing panel depending from said power track means and said suspension track means, said power track means and said suspension track means each comprising a plurality of sections respectively oriented in end-to-end relationship having further means to maintain said sections in end-to-end abutting engagement thereby extending the effective length of said power track means and said suspension track means respectively, said further means comprising block means adjacent the ends of each of said sections fastened against lengthwise movement and turnbuckle means connected between said block means to hold said sections in abutting engagement.

4,062,147
HORTICULTURAL CONTAINER ASSEMBLY WITH SAUCER DRAINAGE AND VENTILATION PASSAGE
Ronald L. Phillips, 4633 Dow Ridge, Orchard Lake, Mich. 48033
Filed Apr. 7, 1976, Ser. No. 674,384
Int. Cl.[2] A01G *9/02, 9/04;* **B28B** *7/16*
U.S. Cl. 47—71 **9 Claims**

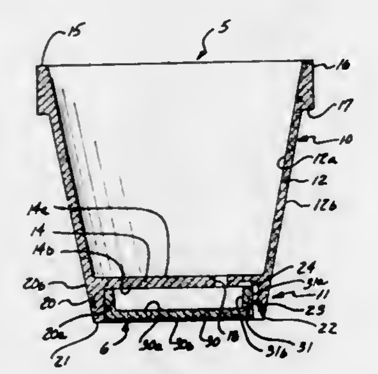

1. A horticultural container device for use with a removable saucer, said container including a longitudinally extending annular hollow wall having an open-end upper wall portion and an open-end lower wall portion, a disk extending transversely across the interior of said wall intermediate the ends thereof to separate said upper portion from said lower portion, one surface of said disk forming with said upper portion of said wall an open-end pot and the opposite surface of said disk forming with said lower portion of said wall a hollow open-end sub-base for said pot, said lower wall portion at the lower end thereof having a support rim, said disk having at least one drain aperture therethrough, and drain-vent passage means including at least one recessed slot extending radially through said support rim and an interconnecting recessed slot adjacent the inner peripheral surface of said lower portion of said wall extending longitudinally from said recessed slot in said support rim to said disk in communication at one end with the exterior of said wall and at its other end with a second interconnecting slot adjacent said opposite surface of said disk, whereby said drain vent passage means is continuous upon insertion of a saucer and formed between said saucer and said open-end sub-base by spacing between said saucer and said inner peripheral surface along said recessed slots.

4,062,148
BASKETS FOR RECEIVING TREE BALLS AND METHODS FOR USE THEREOF
William L. Edmonds, Jr., Kenilworth; Gerald P. Daley, Bensenville, both of Ill., and Leroy Den Besten, Castleton, N.Y., assignors to Leroy Den Besten, 1235 Rt. 9, Castleton, N.Y. 12033
Filed Oct. 6, 1975, Ser. No. 619,651
Int. Cl.[2] A01C *11/00*
U.S. Cl. 47—76 **14 Claims**

1. A wire basket for receiving tree balls and comprising:
a plurality of vertically spaced apart, circular closed wire

rings arranged substantially horizontally, the diameter of each of said wire rings being different from the diameter of each other of said wire rings, the diameters and spacing of the wire rings being selected so that the wire tree basket has an angle of taper; and
a plurality of vertically extending oblong wire upright loops connected by welds to the spaced apart horizontal rings and maintaining the wire rings in the spaced apart relationship, said wire upright loops being terminated by an integral upper bight section and an integral lower bight section with a portion of said upper bight section being located above the uppermost of said wire rings and a portion of said lower bight section being located below

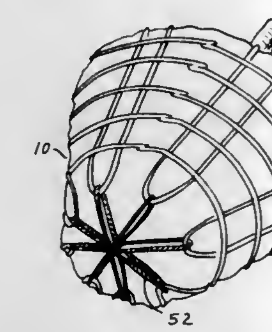

the lowermost of said wire rings to form tie-off points, said wire upright loops comprising substantially parallel side portions disposed between said upper bight section and said lower bight section, said relatively straight side portions engaging each of said wire rings approximately vertically, said relatively straight side portions being welded to said wire rings, the bight sections cooperating in securing the basket about the tree ball and the wire of the basket being distortable to deform the wire at selected locations for tightening the embracing relationship of the wire basket about the tree ball to thereby cooperate and maintain the integrity of the ball and contained root structure between excavation and transplanting.

4,062,149
PARKING SPACE BARRIER
Wesley A. Collins, 4039 Arey Drive, San Diego, Calif. 92154
Filed Aug. 23, 1976, Ser. No. 716,507
Int. Cl.[2] E01F *13/00*
U.S. Cl. 49—49 **3 Claims**

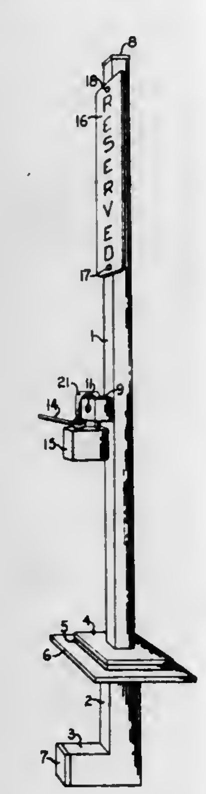

1. A temporary barrier which comprises a ground imbedded tubular receptacle;
a tubular post insertable into the receptacle, having an aperture in its middle section;
a flexible lever fastened to the inside upper wall of the post having its lower end bent to form a bolt extending past the lower edges of the post and of the receptacle;
means for fastening the lever to the post;
means insertable into said aperture for pushing the lever away from the wall; a metal block permanently secured over said aperture having a horizontal channel in line with said aperture intercepted by a vertical channel; and
a padlock insertable into said vertical channel.

4,062,150
CENTERLESS GRINDING METHOD AND DEVICE USING SAME
Masami Masuda, and Syuhei Takasu, both of Yokohama, Japan, assignors to Hitachi, Ltd., Japan
Filed Sept. 8, 1976, Ser. No. 721,236
Claims priority, application Japan, Sept. 10, 1975, 50-108990; Feb. 25, 1976, 51-19008
Int. Cl.[2] B24B *5/26, 1/00*
U.S. Cl. 51—5 D **21 Claims**

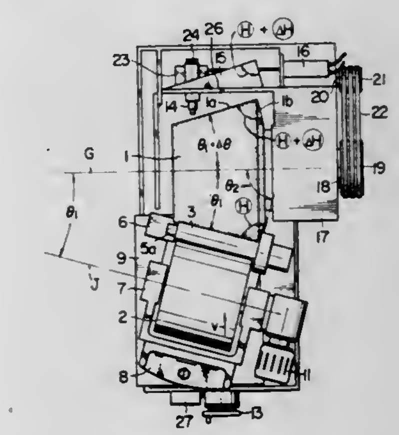

1. A centerless grinding device for grinding surfaces of a workpiece comprising:
a grinding wheel with first and second working surfaces,
supporting means for supporting the workpiece with first and second workpiece surfaces which respectively contact with the first and second working surfaces of the grinding wheel during grinding operations, said workpiece surfaces being angularly disposed with respect to one another, said second working surface being angularly disposed with respect to said first working surface and being configured to limit workpiece movement in an axial direction during grinding operations,
a regulating wheel with a peripheral surface which contacts with the first workpiece surface, said regulating wheel having its axis inclined at a lead angle to the axis of the workpiece in the vertical plane so as to force the workpiece in the axial direction of the workpiece relative to the grinding wheel and thereby to cause the contact of the second workpiece surface with the second surface of the grinding wheel upon movement of the regulating wheel in a predetermined direction toward said first workpiece surface, and
feeding means for feeding the regulating wheel in a predetermined direction so as to grind the first and second workpiece surfaces.

4,062,151
BILLET GRINDING MACHINE
Sven Ingemar Hjalmarson, Fagersta, Sweden, assignor to Sunds Aktiebolag, Sundsvall, Sweden
Filed Sept. 28, 1976, Ser. No. 727,476
Claims priority, application Sweden, Oct. 8, 1975, 7511294; Aug. 11, 1976, 7608957
Int. Cl.[2] B24B *7/02*
U.S. Cl. 51—34 D **8 Claims**
1. A grinding machine for grinding a workpiece such as an ingot or a billet comprising:

a movable table for supporting said workpiece;
a base and a pair of substantially vertical arms pivotally mounted on said base;
a grinding wheel for grinding the surface of said workpiece;
a holder for said grinding wheel pivotally connected to said pair of arms at a pivot so that the contact force of the grinding wheel with the workpiece is caused by the turning moment of said holder about said pivot;

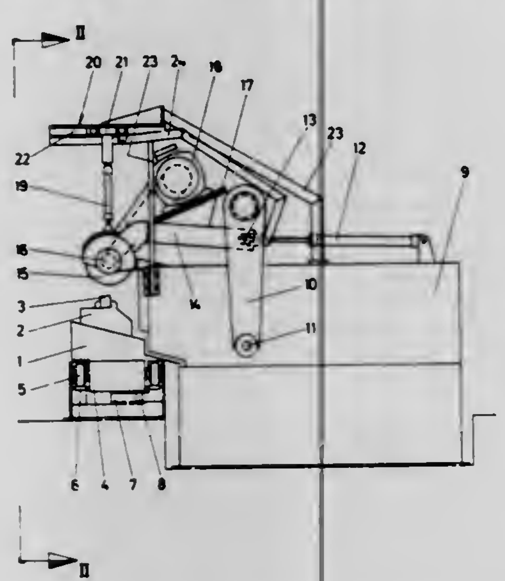

a substantially vertically-acting hydraulic cylinder connected to said holder for pivoting said holder and said grinding wheel about said pivot and for counterbalancing the weight of said holder and said grinding wheel to control the contact force of said grinding wheel; and
means for movably supporting said hydraulic cylinder and being connected to said pivot so that said hydraulic cylinder is movable with said holder as said holder moves about said pivot while maintaining its substantially-vertical position.

4,062,152
VACUUM SANDER
Donald D. Mehrer, 3216 29th Ave. West, Seattle, Wash. 98199
Filed Apr. 28, 1976, Ser. No. 681,216
Int. Cl.² B25B *25/00, 55/06*
U.S. Cl. 51—170 R **15 Claims**

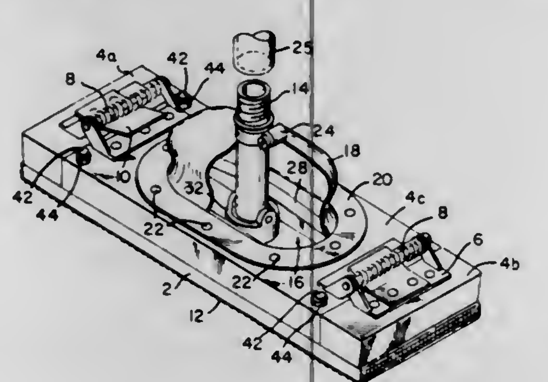

1. A vacuum sander comprising:
an abrasive sheet;
a sander body including a planar support plate for said abrasive sheet, securing means for fastening said sheet to the front face of said planar support plate and a vacuum manifold forming a vacuum chamber communicating with said abrasive sheet such that air draws sanding residue into said chamber;
a tubular sleeve communicating with said vacuum manifold, said sleeve being fastened to the rear face of said support plate through connector means for allowing the angle between said sleeve and support plate to vary over a predetermined range;
an elongated tubular handle having one end communicating with, and fastened to, said sleeve, and the other end communicating with a partial vacuum such that said vacuum chamber is maintained at a reduced pressure.

4,062,153
SILENCED GRINDING WHEEL
Björn Malm, Vastervik, Sweden, assignor to AB Slipmaterial-Naxos, Sweden
Filed July 12, 1976, Ser. No. 704,565
Claims priority, application Sweden, July 23, 1975, 7508412
Int. Cl.² B24D *7/00*
U.S. Cl. 51—207 **6 Claims**

1. Grinding wheel consisting of two or more grinding discs joined together, wherein the ratio of diameter to thickness of the discs is at least 10, said discs are joined together by means of layers of polymer material having a thickness of at least 0.2mm and not greater than the thickness of the discs, and the polymer material has a hardness below 90 Shore A and a loss factor of at least 0.25.

4,062,154
PROCESS FOR AUTOMATICALLY ADJUSTING THE FREQUENCY OF PIEZOELECTRIC RESONATORS IN THE FORM OF BARS OR PLATES
Raymond Huguenin, Port; Hubert Matthey, Brugg, and Martial Voumard, Bienne, all of Switzerland, assignors to Societe Suisse pour l'Industrie Horlogere Management Services S.A., Bienne, Switzerland
Filed Sept. 9, 1976, Ser. No. 721,724
Claims priority, application Switzerland, Sept. 12, 1975, 11889/75
Int. Cl.² B24B *1/00;* **B24C** *1/00;* **G01J** *17/00*
U.S. Cl. 51—319 **6 Claims**

1. A process for automatically adjusting the frequency of a piezoelectric resonator in the form of a bar or plate, said process comprising the steps of:
applying a voltage to said resonator to cause it to resonate;
measuring the frequency of said resonator continuously during a frequency adjusting cycle;
continuously comparing said measured frequency with a desired frequency to obtain a difference frequency value;
storing said difference frequency value at the beginning of an adjusting cycle;
deriving from said difference frequency value a threshold value equal to one half of said difference frequency value;
comparing said threshold value with said difference frequency value; and,

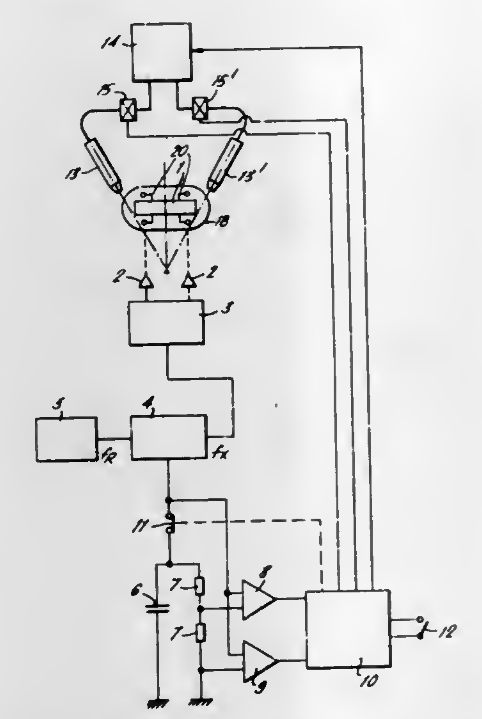

removing material from a first extremity of said resonator as long as said difference frequency value is greater than said threshold value.

4,062,155
SPARK PLUG CLEANER
Roy A. Fricke, River Forest, Ill., assignor to Wells Manufacturing Corporation, Fond du Lac, Wis.
Filed Dec. 29, 1975, Ser. No. 645,268
The portion of the term of this patent subsequent to Mar. 11, 1992, has been disclaimed.
Int. Cl.² B24C *3/00*
U.S. Cl. 51—412 **8 Claims**

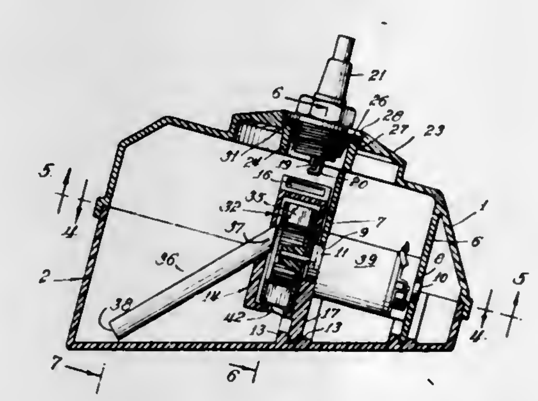

3. In a spark plug cleaner, a closed two-section, horizontally divided outer casing, the casing sections having matching transverse inner vertical partitions forming a transverse wall upon one side of which is mounted a driving motor shaft and upon the other side of which wall there is mounted on said shaft a blower impeller, an impeller casing having a discharge outlet directed diagonally upwardly and having an inclined intake tube extending from the central part of the impeller casing diagonally downward to a point adjacent the junction of the end wall and the floor of the lower part of the outer casing, the upper part of the outer casing having a spark plug receiving opening in its top wall, and a centrally perforated radially expansible and contractible elastic diaphragm secured to the casing to cover said spark plug receiving opening for holding a spark plug with its electrodes on the inside of the aforesaid outer casing and with its longitudinal axis inclined to the vertical.

4,062,156
EXTENSIBLE ROD
Günter Roth, Muelheim (Ruhr), Germany, assignor to Dornier System GmbH, Friedrichshafen, Germany
Filed Sept. 17, 1976, Ser. No. 724,328
Claims priority, application Germany, Jan. 30, 1976, 2603488
Int. Cl.² E04H *12/34;* **E04G** *25/00*
U.S. Cl. 52—111 **13 Claims**

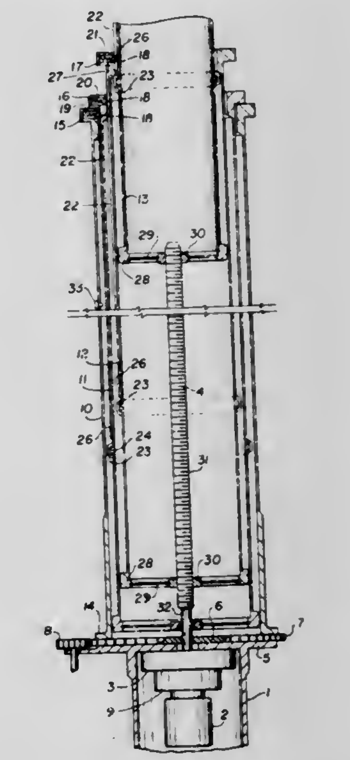

1. An extensible rod comprising:
a. a drive spindle having an axis and carrying threads about said axis;
b. actuating means for rotating said spindle about said axis;
c. a plurality of axially elongated rod elements;
d. engaged guide means on said elements for guiding relative axial movement of said elements;
e. first coupling means associated with each of said elements for sequentially coupling said elements to said spindle and thereby axially moving each element is response to said rotating of said spindle,
   1. said first coupling means including an internally threaded coupling member matingly engageable by said threads; and
f. second coupling means for coupling each one of said elements, while coupled to said threads, to another element for joint axial movement until the coupling member associated with said other element is engaged by said threads,
   1. one of said coupling means including yielding resilient means permitting limited axial movement of the coupling member associated with said other element relative to said one element during said joint axial movement.

4,062,157
DOCK SHELTER
David E. Potthoff, Fond du Lac, Wis., assignor to Medalist Industries, Inc., Milwaukee, Wis.
Filed Dec. 27, 1976, Ser. No. 754,762
Int. Cl.² E04F *10/04;* **E06B** *1/56*
U.S. Cl. 52—173 DS **13 Claims**

1. A loading dock shelter comprising:
frame means having opposed side members and a top member, said frame means being adapted for being fastened to a building wall adjacent the sides and top of a door opening therein and to project outwardly from said building,
side panel means for being mounted on each of said side members to extend toward each other so their corresponding opposed inner edges define the sides of another opening that is aligned with said door opening,

top curtain means for being mounted on said top member between said side panel means and said building, said top curtain means having opposite end regions and sufficient length for said end regions to extend beyond said inner edges of said side panel means, respectively,

said side panel means each comprising a core of flexible material and flexible sheet material enclosing said core and

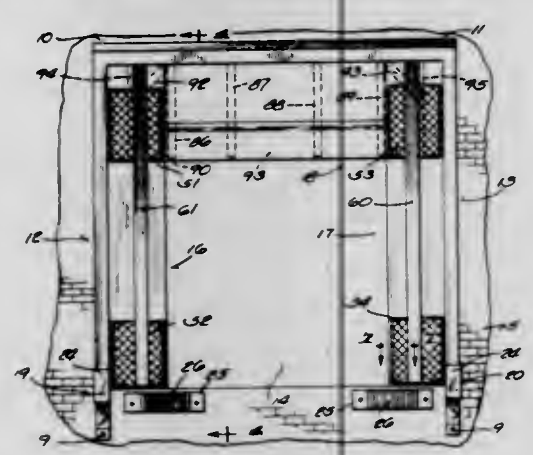

having a base surface for being disposed along a side member and having front and rear surfaces at least one of which converges toward the other in a direction away from said base and toward said inner edges, the width of said core being sufficiently great for said core to swing without substantial compressive deformation while forming a seal with the body of a vehicle entering the opening between said panels.

4,062,158

PREFABRICATED SWIMMING POOL CONSTRUCTION

Herbert O. Kaufmann, Kew Gardens, N.Y., and John I. Schaeffer, Towaco, N.J., assignors to Swim 'n Play, Inc., Newark, N.J.

Filed July 12, 1976, Ser. No. 704,691

Int. Cl.² E04B *1/346*

U.S. Cl. 52—71 **3 Claims**

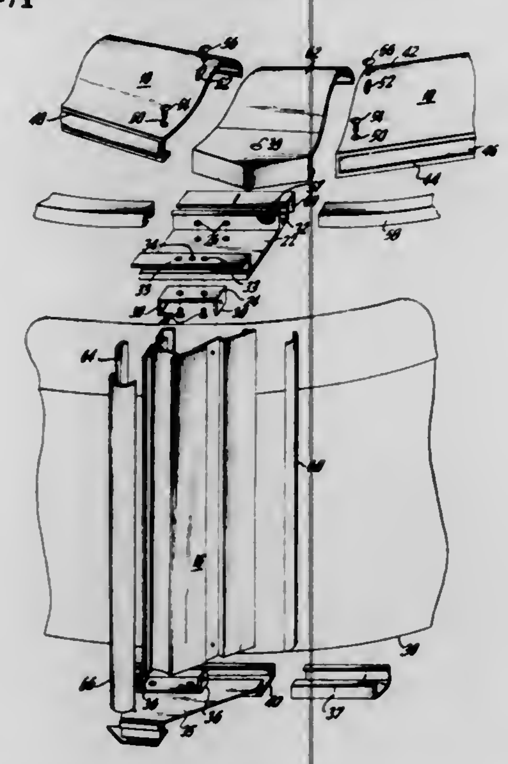

1. A prefabricated above-ground swimming pool comprising a liner formed by a flexible sheet, an upstanding wall, a plurality of vertical posts supporting and positioning said wall, a plurality of elongated two-ended lip members positioned between the top ends of said posts, and a connecting the ends of said lip members to said posts at adjustable angles, said attachment means including a plurality of brackets secured respectively to the upper ends of said posts, a first fastener passing through a first opening in said lip member for joining one end of one of said lip members to one of said brackets at a first point of connection and permitting pivotal adjusting of said lip member relative to said bracket at said first point of connection, and a second fastener passing through a second oblong opening in said lip member and spaced from said first member, said second oblong opening extending longitudinally along an axis colinear with an imaginary line extending between said first opening and said second opening, said second fastener being received for sliding motion in said bracket along a path substantially perpendicular to said axis and being effective to join said lip member end to said bracket at a second point of connection spaced from said first point of connection, thereby permitting pivotal and sliding adjustment of said lip member relative to said bracket at said second point of connection.

4,062,159

BUILDING BRICK AND WALL STRUCTURE

Gustav Oskar Pahr, 97 Deep Dene Place, West Vancouver, British Columbia, Canada

Filed Aug. 5, 1974, Ser. No. 494,636

Int. Cl.² E04B *2/20*

U.S. Cl. 52—421 **6 Claims**

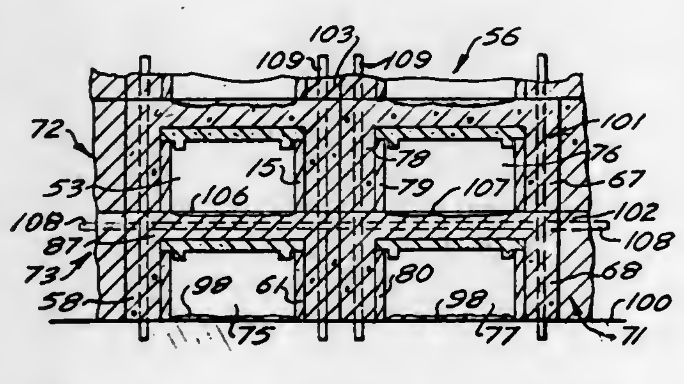

1. A wall constructed of horizontal rows and vertical columns of similar bricks, in which each brick has:

i. first and second spaced side members, each side member having a pair of vertical, parallel end edges and a pair of horizontal parallel upper and lower edges, the end edges and upper and lower edges of the first side member being coplanar with the corresponding end edges and upper and lower edges of the second side member,

ii. first and second spaced connecting members extending between the first and second side members, the connecting members having lower edges coplanar with the lower edges of the side members, and upper edges spaced below the upper edges of the side members, the connecting members having outer faces spaced inwards of the end edges of the side members so that end portions of the side members extend outward from the brick beyond the connecting members,

the four members of each brick defining a generally rectangular-sectioned hollow brick having side faces defined by the side members, open end faces defined in part by the end edges of the side members, an open upper face defined in part by the upper edges of the side member, and an open lower face defined by the lower edges of the side members and the lower edges of the connecting members, and in which each brick further includes:

iii. a cover plate having a width defined by space between opposed faces of the side members and a length sufficient to support the plate on the connecting members, means being provided to prevent movement of the plate relative to the brick, the plate having an upper surface spaced below the upper edges of the side members sufficiently to provide a longitudinal cavity extending along the brick to ends thereof, the cover plate supported on the upper edges of the connecting members to define therebeneath an inner cavity within the brick, the inner cavity having an open lower end defined by the lower edges of the connecting members and portions of the lower edges of the side members;

the bricks of the wall being disposed so that, in a particular column of bricks the end edges of upper bricks are aligned with

the end edges of lower bricks so as to align the inner cavities vertically, and in particular row of bricks upper and lower edges of bricks are aligned so as to align the longitudinal cavities horizontally, and in a plane portion of the wall upper and lower faces of all the bricks are generally coplanar; the wall further including:

iv. a rectangular grid of horizontal and vertical concrete supports provided in spaces defined by portions of adjacent bricks; the horizontal concrete supports being contained in the aligned longitudinal cavities and being defined in part by opposed faces of the side members above a cover plate, lower edges of connecting members of an adjacent upper brick and the upper surface of the cover plate; the vertical concrete supports extending between adjacent vertically aligned inner cavities and being defined in part by opposed inner faces of the end portions of the side members and opposed outer faces of the connecting members of adjacent bricks,

the open lower end of the inner cavity within each brick being closed by a portion of an upper surface of a horizontal support of concrete within the adjacent lower brick.

4,062,160

LATH HAVING SPIDER WEB-LIKE ELASTOMERIC BACKING

John M. Christison, Kinross, Scotland, assignor to The Expanded Metal Company Limited, London, England

Continuation of Ser. No. 569,453, April 18, 1975, abandoned. This application May 24, 1976, Ser. No. 688,988

Int. Cl.² B32B *3/14, 3/24;* **E04B** *5/52;* **E04F** *13/04*

U.S. Cl. 52—445 **13 Claims**

1. A metal mesh lath which is adapted to receive a spray or projection rendering of a material such as plaster or mortar, said lath having a rear surface provided with a coating of an adhesive having elastomeric properties which is stuck to said metal mesh in the form of irregular spider web-like elastic strand membrane over the apertures of said mesh, whereby upon application of a rendering of said plaster or mortar onto the front of the lath, as the rendering passes through said apertures, said elastic strand membrane contains said rendering material, but, due to its elasticity, allows a portion of said rendering to pass through said apertures and to key behind said mesh.

4,062,161

STRIP FOR RETAINING TWO EXTRUSIONS IN SELECTED POSITION

Theodor C. Schubach, Powell, Ohio, assignor to Rohr Industries, Inc., Chula Vista, Calif.

Filed Apr. 5, 1976, Ser. No. 673,399

Int. Cl.² E04C *1/34;* **E04B** *1/62*

U.S. Cl. 52—461 **5 Claims**

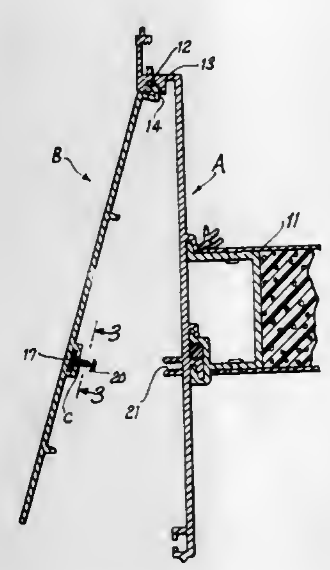

1. Mechanism for attaching a first member to a second member comprising:

a pair of substantially rigid walls integrally formed on the second member defining a first channel therebetween, said channel having a serrated interior surface;

a T-shaped attaching strip of substantially resilient material having a head portion at one end and a stem portion extending perpendicularly from said head portion, said stem portion having a relieved area to form a narrow neck portion at its other end with a transversely disposed portion mounted on the end of said neck portion;

said stem portion being of a width substantially corresponding to the width of said channel;

said first member having a pair of normally extending parallel wall members integrally formed along one of its sides to define a second channel for receiving the head portion therein;

a flange on the free end of each wall member overlying the head portion within the second channel to retain the attaching strip therewithin;

said transversely disposed portion being of a width slightly greater than the thickness of said stem portion and said first channel whereby when the first and second members are moved with predetermined force toward each other, the projecting stem portion enters into said serrated channel, in which position the side edges of the transverse strip portion grip the sides of the serrated channel and thereby restrain said first and second members against separation;

the sides of said transverse strip portion being compressed into the relieved area of said narrow neck portion during insertion of said transverse strip portion into said serrated channel.

4,062,162

CLIP FOR JOINING AND MAINTAINING ALIGNMENT OF ACOUSTICAL TILE IN A STARTING ROW THEREOF

David F. Nicklaus, Mountville; James C. Ollinger, Lancaster, both of Pa., and Thomas M. Petrie, Carrollton, Tex., assignors to Armstrong Cork Company, Lancaster, Pa.

Filed Jan. 10, 1977, Ser. No. 758,003

Int. Cl.² E04B *5/52, 1/38*

U.S. Cl. 52—481 **3 Claims**

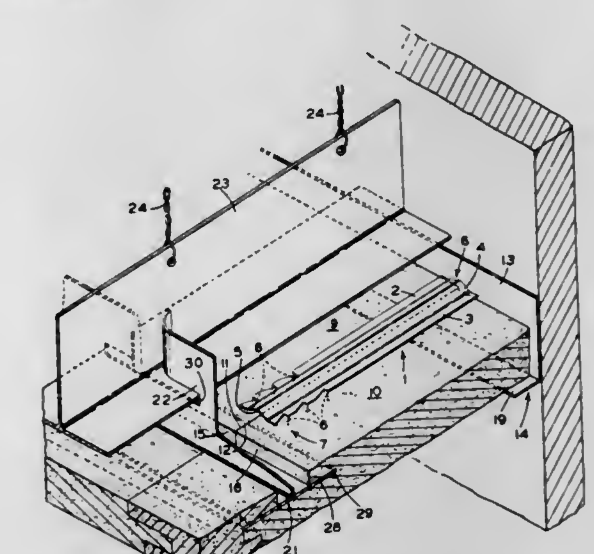

1. An edge-aligned, joined and stabilized starting row of tiles in a suspended ceiling system, comprising in combination a plurality of ceiling tiles, means mounted on a wall for supporting the tiles at their edge portions which are adjacent the wall, means for supporting the edges of said tiles which are opposite those adjacent the wall, and clip means joining said tiles to each other, said clip means each comprising a body member having planar, longitudinally extending side portions, said clip being mounted on said tiles to overlie back surface portions thereof adjacent opposing edges of adjacent tiles and extend therealong into contact with the wall-mounted support therefor, prong means on said body member adjacent the end thereof which is opposite the end in contact with the wall-mounted support member, said prong means extending down-

wardly from the side portions of said body member in planes substantially perpendicular to the plane of the sides and penetrating the surface portions of the tiles.

4,062,163
ALIGNMENT AND STABILIZING CLIP FOR ACOUSTICAL TILE INSTALLATION
James C. Ollinger, Lancaster, Pa., assignor to Armstrong Cork Company, Lancaster, Pa.
Filed Jan. 10, 1977, Ser. No. 758,004
Int. Cl.² E04B *5/52, 1/38*
U.S. Cl. 52—481 **3 Claims**

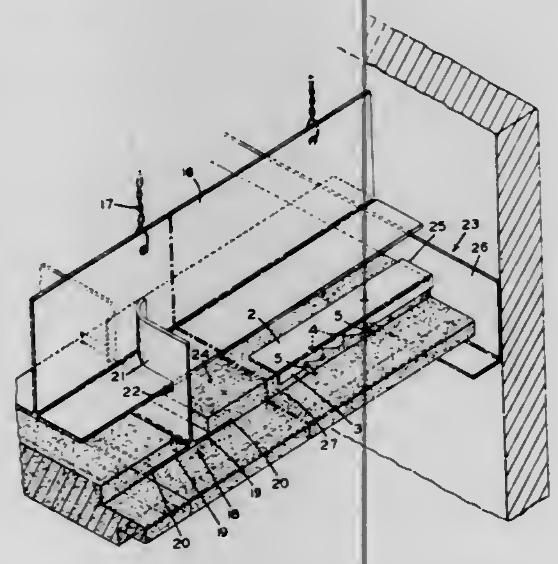

3. An edge-aligned, joined, and stabilized starting row of tiles in a suspended ceiling system, comprising in combination, a plurality of ceiling tiles, substantially L-shaped means mounted on a wall for supporting the tiles at their edge portions which are adjacent the wall, movable means having a cross sectional shape substantially in the form of an inverted T for supporting the edges of said tiles which are opposite those adjacent the wall, clip means mounted on said tile and extending between and along adjacent opposed edge portions thereof into contact with the vertical portion of said wall-mounted support means, said clip means comprising an elongated body member having a substantially rectangular base portion positioned on the surface of the tile adjacent an edge portion thereof which opposes an adjacent tile and, a flange integral with said base portion and extending along the entire length of said body member from one edge only thereof in a plane perpendicular to that of the base, said flange being of lesser mass and width than the base and extending between opposed edge portions of the tile, first and second prong means each comprising a pair of prongs extending from a portion of said flange adjacent the end thereof remote from the wall-mounted support means, the first pair of prongs being separated by the second pair of prongs with approximately equal spacing between all prongs, said first and second prong means extending from said flange in opposite directions and in vertical planes perpendicular to said flange and said base into opposed edge portions of adjacent tiles, the support-contacting end portion of said flange being devoid of prongs.

4,062,164
CEILING PANEL SECURING DEVICE
Charles Cousins, Placentia, Calif., assignor to Hughes Aircraft Company, Culver City, Calif.
Filed Jan. 10, 1977, Ser. No. 758,234
Int. Cl.² E04B *5/52*
U.S. Cl. 52—489 **5 Claims**

1. A ceiling panel securing device for securing a ceiling panel to its supporting framework in a suspended ceiling construction, said ceiling panel securing device comprising:

means for engaging over a ceiling panel which is resting on suspended ceiling supporting framework; a rotatable turn-catch movable from a position where it is away from the

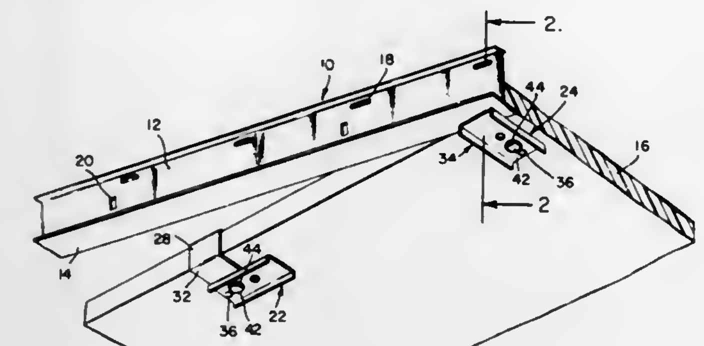

framework to a position where it engages under the framework.

4,062,165
PLUG DEVICE AND METHOD AND APPARATUS THEREFOR
Ronald A. Marks, 23362 Burton St., Canoga Park, Calif. 91304, and Neal Goldman, 108 S. Orlando Ave., Los Angeles, Calif. 90048
Filed May 10, 1976, Ser. No. 684,998
Int. Cl.² E02D *37/00*
U.S. Cl. 52—514 **13 Claims**

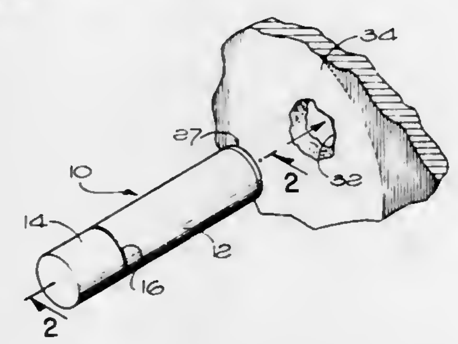

1. A method of blocking an opening in a damaged wall portion of a double-walled structure having a front wall and a rear wall spaced therefrom, comprising the steps of:
inserting through said opening a cylindrical plug comprising a first section and a second section formed integrally in end-to-end relationship;
severing said second section from said first section and removing said second section; and
depositing settable patch material on the outer surface end of said first section to fill the space between said surface and the surface of said front wall.

4,062,166
SUPPORT GRATING FOR EQUIPMENT BOXES
Jean Debaigt, Maisons Laffitte, France, assignor to CGEE Alsthom S.A., Perret, France
Claims priority, application France, Mar. 25, 1975, 09325
Filed Mar. 19, 1976, Ser. No. 668,790
Int. Cl.² E04C *2/42*
U.S. Cl. 52—664 **4 Claims**

1. A support grating comprising a grid constituted by parallel frame members arranged in spaced relation and distance pieces engaged with said frame members to hold the same in assembled relation at a predetermined spacing, each said frame member having upper edges and being provided with a vertical array of at least three spaced aperture means including slots at the upper edge, said distance pieces each having opposite vertical sides with at least two vertically offset projections means on each side, said distance piece having a clearance at one side such that the horizontal distance between said one side of said distance piece at said clearance and the second side of the distance piece is less than the spacing between adjacent frame members while the horizontal distance between said projections means is greater than the spacing between said frame members, said distance piece being laterally insertable between said first and second of said frame members at said clearance to a depth at which a projection means at the first side of the distance piece is engaged at the bottom of the slot in the first frame member whereupon said distance piece is pivotably movable in a first direction to enable the distance piece to be laterally inserted further between the frame members until a projection means at the second side is engaged at the bottom of

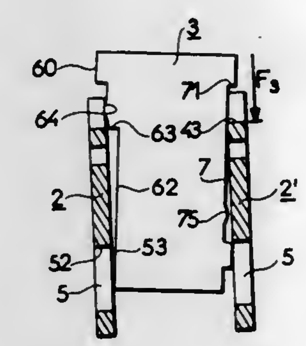

the slot in the second frame member and said distance piece can be pivoted in a second direction opposite the first to engage the projection means at said one side into corresponding aperture means of the first frame member while concurrently engaging the projection means at the other side of the distance means into the aperture means of the second frame member, the position of the projection means and the aperture means being such as to produce slight elastic deformation of the frame members to effect locking of the projection means in the aperture means.

4,062,167
TUBULAR STRUT WITH ASYMETRICAL END DESIGN AND DRAWN HOLE
Tyrell T. Gilb, Berkeley, Calif., assignor to Simpson Manufacturing Co., Inc., San Leandro, Calif.
Filed June 2, 1977, Ser. No. 802,357
Int. Cl.² E04C *3/18*
U.S. Cl. 52—693 **6 Claims**

1. An elongated structural member comprising:
a. a tubular body section having a generally uniform cross section;
b. at least one end of said body section is formed with a flattened surface on one side;
c. said end is formed with an opening therethrough;
d. on said end opposite said flattened surface, an extended bulb section extends to said opening; and
e. said opening is drawn in the direction of said side with said extended bulb section and away from the centroid of said tubular body section.

4,062,168
CONTAINER FILLING MACHINE
Thomas E. Watts, P.O. Box A, and Thomas R. Watts, Rte. No. 2, Box 3 A, both of Shelley, Idaho 83274
Filed Oct. 6, 1976, Ser. No. 729,971
Int. Cl.² B65B *57/10, 5/10*
U.S. Cl. 53—64 **9 Claims**

1. A container filling machine, comprising, in combination:
a. conveyor means for transporting articles to an elevated loading station;
b. elevator means for sequentially raising a container to be filled to the loading station and subsequently lowering the container as same is filled; and
c. control means connected to the elevator means for lowering the elevator means as a function of articles in the container, the conveyor means including a discharge portion extending into a path of travel of the elevator means for insertion into the container, and the control means including sensing means are mounted on the discharge portion of the conveyor means for detecting a level of articles in the container and lowering the elevator means as a function of the level detected, and the con-

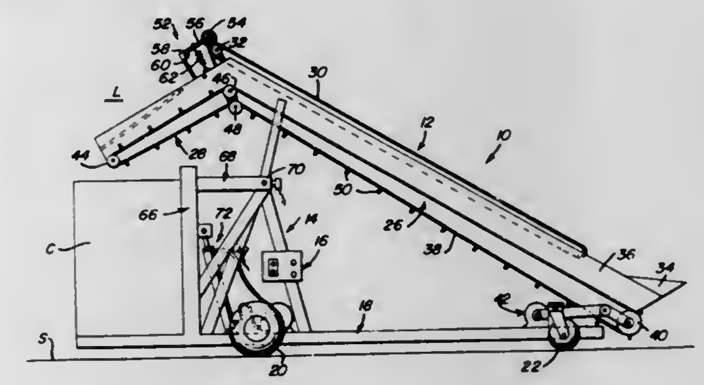

veyor means further including an endless conveyor comprising a lifting portion arranged for lifting articles to the loading station, and also including the discharge portion, with the latter arranged for receiving articles from the lifting portion, a pulley arranged over the endless conveyor at the transition thereof between the lifting portion and the discharge portion, with an endless hold-down including a web being disposed over only the pulley and extending along the lifting portion of the endless conveyor for holding articles on the lifting portion as the articles are conveyed to the discharge portion.

4,062,169
PACKAGING MACHINES
Edward Alan Lister, Burnley, and Graham Wilson Clarke, Nelson, both of England, assignors to Brdr. Schur International A.S., Horsens, Denmark
Division of Ser. No. 667,944, March 18, 1976. This application Mar. 7, 1977, Ser. No. 774,972
Claims priority, application United Kingdom, Mar. 20, 1975, 11594/75
Int. Cl.² B65B *63/02, 43/26*
U.S. Cl. 53—124 D **6 Claims**

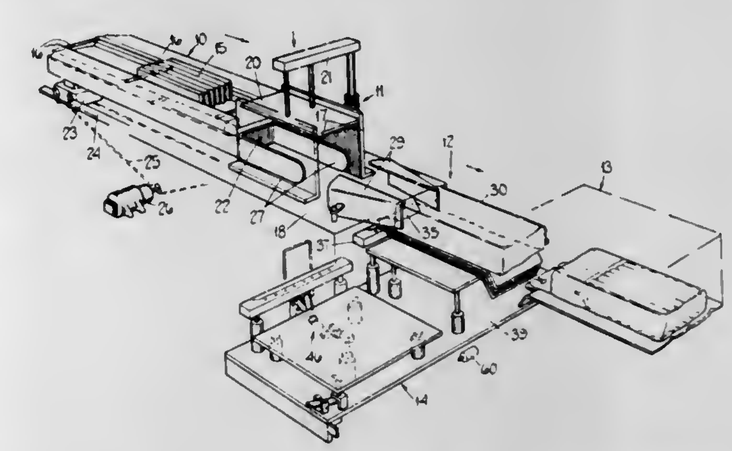

1. In a machine for packaging a batch of semi-compressible articles into preformed bags open at one end, apparatus for inserting said batch in said bags comprising a longitudinal ram movable toward and away from said open bag, batch receiving means located at the leading end of said ram to carry said batch into said open bag, said batch receiving means comprising a pair of generally elongated flat parallel walls extending forwardly of the leading end of said ram and spaced from each other to receive a plurality of articles forming a batch therebe-

tween, at least one of said walls being flexible along its length, means located at the entrance of said bag to deflect said flexible wall transversely of the direction of movement so as to impart a compressive force upon the articles in said batch as they are inserted into said bag.

4,062,170
APPARATUS FOR LOADING BAGS
William George Orem, Fairport, N.Y., assignor to Mobil Oil Corporation, New York, N.Y.
Filed Mar. 17, 1977, Ser. No. 778,406
Int. Cl.² B65B *67/12*
U.S. Cl. 53—390 14 Claims

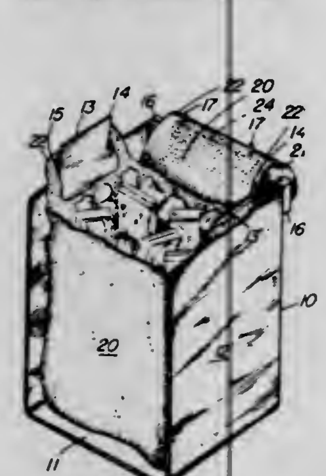

1. An apparatus that facilitates the loading of articles in an open mouth plastic bag having integral handle loops disposed on opposite sides of the mouth thereof, whereby said bag is suspended within said apparatus and held in open position by means of said handles, said apparatus comprising:

a. a substantially horizontal support surface to support the bottom of said bag during loading;
b. a first upwardly projecting elongated tab, supported at an elevation above said horizontal support surface approximately equal to the vertical distance between the open area of a handle of such a bag and the bottom of said bag when said bag is in open condition and resting on said horizontal support surface;
c. a second upwardly projecting elongated tab, spaced apart from said first tab and supported at substantially the same height above said horizontal support as said first tab, said second tab being disposed substantially parallel to said first tab and spaced apart therefrom at a distance substantially the same as the distance between said handles when said bag is in open condition;
d. both of said tabs being of substantially similar configuration and each of which tabs is adapted to fit within the open area of one of said handles; and
e. a rearwardly directed protrusion at one end portion of each of said tabs, each of which protrusions is adapted to retain on its tab a handle of said bag when said bag is suspended in said apparatus.

4,062,171
CUTTER BLADE ASSEMBLY
Jack Howard Rose, Livonia, Mich., assignor to Massey-Ferguson Inc., Detroit, Mich.
Filed Aug. 30, 1976, Ser. No. 719,028
Int. Cl.² A01D *35/18*
U.S. Cl. 56—295 9 Claims

1. A lawn mower cutter blade assembly having a plurality of cutter blades movable between extended and retracted position, drive means including a shaft, means for pivotally mounting said blades on said drive means, and each blade pivoting about a separate axis radially outwardly from said shaft, the improvement comprising, means for coacting between said blades upon the striking of an unseverable object by one of said

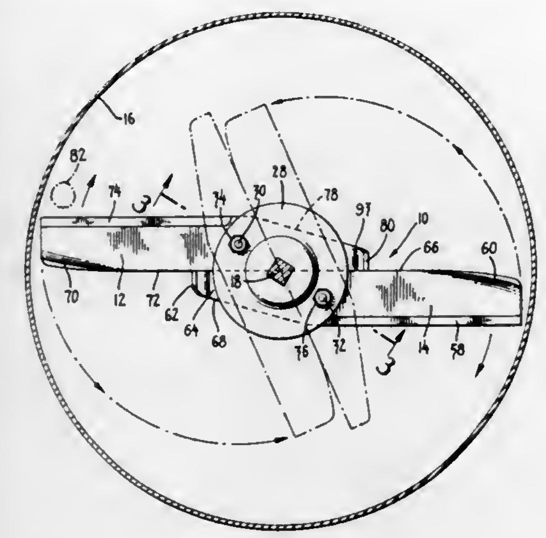

blades, and said coacting means being spaced radially outwardly of said means for pivotally mounting said blades.

4,062,172
RAISING AND LOWERING MECHANISM FOR THE REAR CHAMBER IN A CROP MATERIAL ROLL FORMING MACHINE
Robert L. Rice, New Holland, and Aquila D. Mast, Lancaster, both of Pa., assignors to Sperry Rand Corporation, New Holland, Pa.
Filed Feb. 9, 1976, Ser. No. 656,759
Int. Cl.² A01D *39/00*
U.S. Cl. 56—343 23 Claims

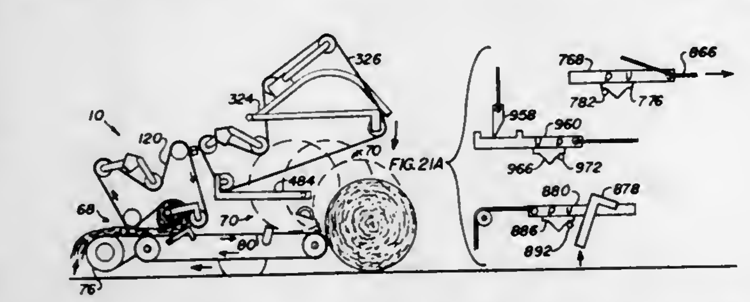

1. In a crop material roll forming machine, the combination comprising:

a mobile frame adapted to move across a field;
crop material delivery means supported by said frame;
means movably mounted by said frame above said delivery means to define a front roll forming region therebetween in which to initiate formation of a crop material roll and a rear roll forming region therebetween in which to complete formation of said crop material roll after said roll has been partially formed in said front region and transferred to said rear region; and
mechanism on said frame for supporting portions of said movably mounted means located respectively at front and rear ends of said rear region, said mechanism being operable for moving said movably mounted means portions toward and away from said delivery means in a coordinated manner for facilitating receipt through said front end of said rear region of said roll when transferred from said front region, completion of the formation of said transferred roll in said rear region and discharge of said roll through said rear end of said rear region when completed.

4,062,173
HAY-MAKING MACHINES
Herman Mulder, Wateringen, Netherlands, assignor to C. van der Lely N. V., Maasland, Netherlands
Filed Mar. 25, 1976, Ser. No. 670,407
Int. Cl.² A01D *79/00*
U.S. Cl. 56—370 33 Claims

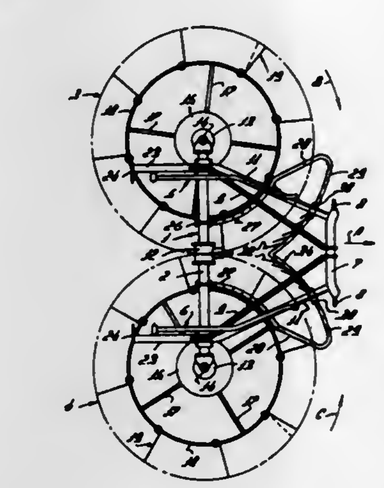

1. A haymaking machine comprising a mobile frame and at least one pair of tined rake members supported on said frame, said rake members having outwardly extending tines and being rotatable about corresponding upwardly extending axes, driving means connected to rotate said members in relatively opposite directions about said axes, whereby crop is passed between said members during operation, two crop feeders being mounted on said machine and comprising a forward pair of feeders located adjacent the front of said rake members relative to the normal direction of tavel and a vertical plane of symmetry of said machine that extends between the axes of rotation of said rake members, a further pair of feeders being positioned to the rear of said forward pair and each pair of feeders comprising downwardly extending crop guides that correspond to said rake members.

4,062,174
HAY-MAKING MACHINE
Gregor Knuesting, Lengede, Germany, assignor to Wilhelm Stoll, Maschinenfabrik GmbH, Lengede, Germany
Filed May 20, 1976, Ser. No. 688,258
Claims priority, application Germany, May 26, 1975, 2523265
Int. Cl.² A01D *79/06*
U.S. Cl. 56—370 5 Claims

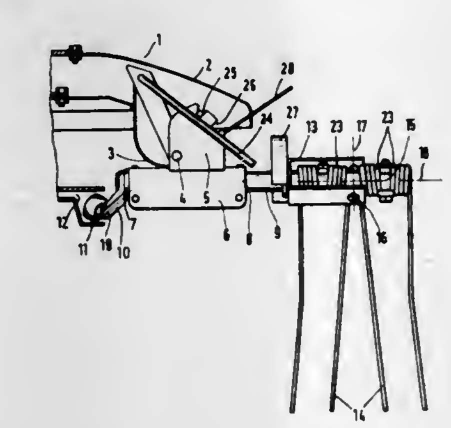

4. A hay-making machine having a machine frame and at least one reversible rotary rake driven for rotation about a generally vertical axis of rotation, comprising:

arm means rotatably mounted on said rotary rake and extending outwardly from the axis of rotation of said rotary rake;
elongated crank means for effecting a rotation of said arm means in response to a rotation of said rotary rake;
tine carrier means pivotally secured to said arm means adjacent the outer end thereof and movable through 180° relative to said arm means about the pivot axis between said arm means and said tine carrier means;
a plurality of tines mounted on said tine carrier means on one side of a plane defined by said axis of rotation of said arm means and the longitudinal axis of said crank means and being oriented in a first ground engaging position, said pivot axis being contained in said plane whereby a pivoting of said tine carrier means through 180° relative to said arm means will effect the relocation of said tines on the opposite side of said plane and in mirror-image relation to the pivot axis; and
shifting means for effecting a shifting of said crank means to cause a relocation of said arm means and said tines in a second ground engaging position adapted for rotation of said rotary rake in an opposite direction of rotation.

4,062,175
APPARATUS FOR PRODUCING FLAKED YARNS
Massimo Ghidelli, Vigano Brianza (Como), Italy
Continuation of Ser. No. 485,312, July 2, 1974, abandoned, which is a continuation-in-part of Ser. No. 270,197, July 10, 1972, abandoned. This application Oct. 14, 1976, Ser. No. 732,731
Claims priority, application Italy, July 28, 1971, 7788/71
Int. Cl.² D01H *5/28*
U.S. Cl. 57—36 1 Claim

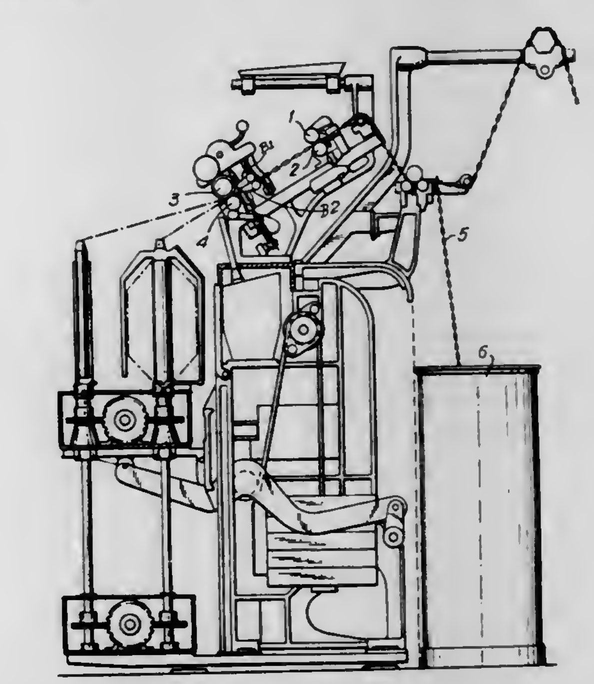

1. A device for forming a flaked yarn, comprising: a drawing device for a sliver, said drawing device comprising a pair of rotatable holding rollers including a first and a second roller in mutually cooperative pressure contact, and a pair of delivery drafting rollers including a third and a fourth roller in mutually cooperative pressure contact, said pair of drafting rollers being spaced from said pair of holding rollers so as to form a drafting zone therebetween, said third roller having a fluted peripheral steel surface and said fourth roller having a peripheral rubber surface, a plurality of spaced and mutually staggered grooves being formed in and extending around the annular cylindrical surface of said rubber surface, the width of each groove being smaller than the thickness of the sliver compressed between said rollers, said spaced grooves extending for only a portion of the circumference of said roller, and further laterally offset spaced grooves extending along successive portions of said roller circumference so as to form a pattern of discontinuous groups of grooves extending around the cylindrical annular surface of said rubber-surface roller; and twisting means located downstream of the said drawing rollers receiving the drafted sliver therefrom whereby, after the drawing operation and

responsive to the passage of the sliver between said drafting rollers and to the differential drawing effect caused by the said grooves, said twisting means form said drafted sliver into a flaked yarn.

4,062,176

HIGH SPEED ROTARY BODY FOR FALSE-TWISTING

Junshiro Ogura, Tokyo, Japan, assignor to Ogura Jewel Industry Co., Ltd., Tokyo, Japan

Filed Jan. 19, 1976, Ser. No. 650,079

Claims priority, application Japan, Jan. 27, 1975, 50-10434; Mar. 6, 1975, 50-27521

Int. Cl.² D02G *1/06*

U.S. Cl. 57—77.3 **8 Claims**

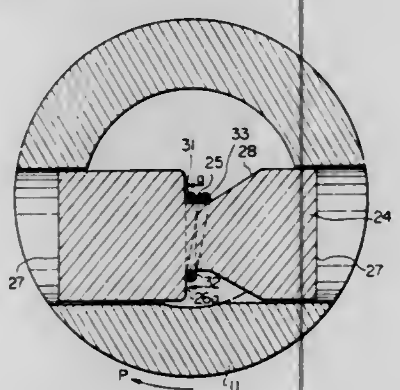

1. A rotary body for false twisting yarn comprising a tubular body having an axis and being rotatable around said axis and a pin element in said tubular body fixed perpendicularly to said rotating axis of said tubular body, said pin element comprising a small cylinder portion having an axis, a diameter, and two ends, a larger cylinder portion at one end of said smaller cylinder portion and having a larger diameter than said diameter of said small cylinder portion, and a truncated conical portion having an axis and a truncated end, said truncated end adjoining the other end of said smaller cylinder portion, the diameter of said truncated end being the same as that of said small cylinder portion and said axis of said truncated portion and said small cylinder portion being co-axial.

4,062,177

SPUN YARN AND PROCESS FOR MANUFACTURING THE SAME

Teiryo Kojima, and Shin-ichi Kitazawa, both of Ohtsu, Japan, assignors to Toray Industries, Inc., Tokyo, Japan

Filed June 16, 1976, Ser. No. 696,708

Int. Cl.² D02G *3/04*

U.S. Cl. 57—140 BY **7 Claims**

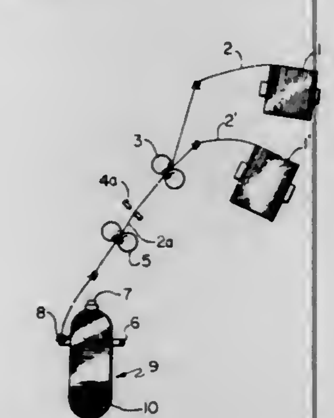

1. A spun yarn composed only of staple fibers in which the product of the degree of yarn evenness, CV, and the square root, $\sqrt{N}$, of the average number of fibers in a cross section of said yarn is a value between 12.5 and 100, and the effective fiber content of said staple fibers is over 25%.

4,062,178

ELECTRONIC TIMEPIECE

Motoyoshi Sakamoto, Suwa, Japan, assignor to Kabushiki Kaisha Suwa Seikosha, Tokyo, Japan

Continuation-in-part of Ser. No. 462,554, April 19, 1974, abandoned. This application July 15, 1976, Ser. No. 705,487

Claims priority, application Japan, Apr. 19, 1973, 48-43647

Int. Cl.² G04B *27/08*

U.S. Cl. 58—23 R **6 Claims**

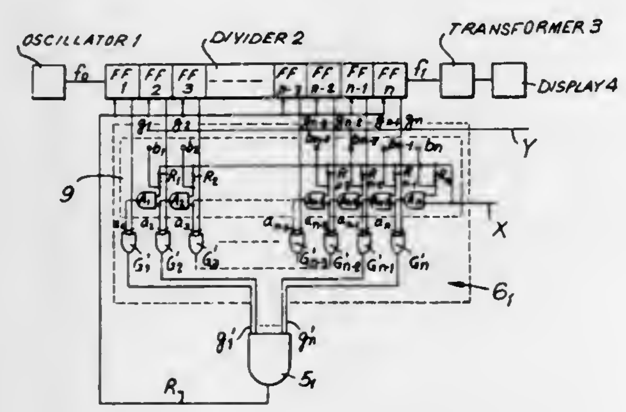

1. In an electronic timepiece including oscillator means for producing a high frequency time standard signal, divider means for producing an unregulated timekeeping signal in response to said high frequency time standard signal, said divider means including n series-connected divider stages, the frequency of said unregulated timekeeping signal being determined by the number of n series-connected divider stages, each of said n divider stages being adapted to produce an intermediate frequency signal representative of the count thereof, the improvement comprising, a first logic gate means for receiving at least one of said intermediate frequency signals and inverted intermediate frequency signals from each of said n series-connected divider stages, and in response to said of said intermediate frequency signals and said inverted intermediate frequency signals applied thereto having a coincident binary level, being adapted to apply a control signal to each of said divider stages to thereby adjust the count of each of said divider stages to the same binary level, and n second logic gate means respectively coupled intermediate said n series-connected divider stages and said first logic gate means, each of said second logic gate means being adapted to receive and select an intermediate frequency signal and applya predetermined number of said intermediate frequency signals produced by k series-connected divider stages, where $k = 0, 1, 2 \ldots, n-1$, to said first logic gate means, said second logic gate means being further adapted to invert and apply said intermediate frequency signals produced by said $k + 1$ through n divider stages to said first logic gate means, and n third logic gate selecting means coupled respectively to each of said n second logic gate means for selectively disposing a first plurality of k second logic gate means associated with k series-connected divider stages, where $k = 1, 2, \ldots, n\text{-}1$, to directly apply said intermediate frequency signal to said first logic gate, said remaining n third logic gate selecting means being adapted to dispose each of said second logic gate means coupled to said $k + 1$ through n series-connected divider stages to invert said intermediate frequency signals applied thereto and, in turn, apply same to said first logic gate means, said intermediate frequency signals produced by said divider stages being applied as a first input to said respect second logic gate means and wherein a second input of each of said 1 through n - 1 second logic gate means is the respective outputs of said 2 through n third logic gates, the first input of said nth third logic gate means being referenced to a high binary level, and wherein the second input of each of said n third logic gate means includes a select terminal, said k select terminal being adapted to reference each of said inputs to k third logic gate means, and in turn, k second logic gate means to an open state to thereby apply each of said intermediate frequency signals produced by k series-connected divider stages to said first logic gate means, said remaining $k + 1$ through n third logic gate select means being adapted to dispose each of said second logic gate means to which same are coupled to invert said intermediate frequency signals applied thereto.

4,062,179

SWITCHING MECHANISM FOR AN ELECTRONIC TIMEPIECE

Yuji Koike, Matsudo, Japan, assignor to Kabushiki Kaisha Daini Seikosha, Japan

Filed Dec. 22, 1975, Ser. No. 643,176

Claims priority, application Japan, Dec. 28, 1974, 50-2249[U]

Int. Cl.² G04C *3/00*

U.S. Cl. 58—23 R **3 Claims**

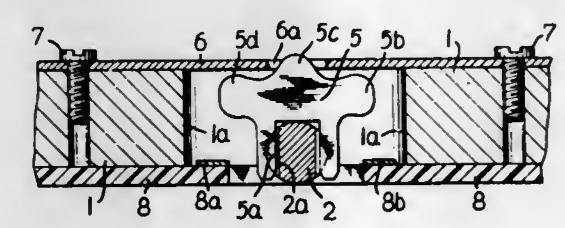

1. A switching mechanism for an electronic timepiece comprising, in combination:

a. a cam having a plurality of peripherally spaced peripheral projections:

b. a shaft having means for engaging said cam so that the peripheral projections of said cam are angularly positioned upon axial rotation of said shaft;

c. a base member having a bore for receiving therein said shaft and dimensioned to permit axial rotation of said shaft within said bore, and having an open recess for receiving said cam and being open above and below cam, wherein said cam within said recess limits the axial movement of said shaft relative to said base member;

d. a circuit board mounted on said base member and having contacts disposed opposite said recess containing said cam member and positioned for contacting respective ones of said peripheral projections when said cam is rotated upon rotation of said shaft; and

e. a thin spring member mounted on said base member and having an aperture disposed opposite said recess containing said cam member and positioned relative to said cam member with a peripheral projection of said cam member extending therethrough, said aperture being dimensioned to permit said cam to rotate upon rotation of said shaft, and said spring member bearing against said cam member to maintain it at fixed angular positions determined by which of said projections extend into said aperture for maintaining a respective one of the peripheral projections in contact with a corresponding one of said contacts.

4,062,180

ELECTRONIC CHESS CLOCK

Joseph Meshi, 1514 Traveld Way, Encinitas, Calif. 92024, and Jeffrey R. Ponsor, 11230 Calle Dario, San Diego, Calif. 92126

Filed July 31, 1975, Ser. No. 600,932

Int. Cl.² G04B *5/20*

U.S. Cl. 58—145 D **7 Claims**

1. A chess clock comprising:

first and second digital readout means;

a digital memory means coupled to said first and second digital readout means, said memory means operable for receiving at least one predetermined programmed time period, said first and second digital readout means operable for counting down from a predetermined programmed time period total in said memory means;

switch means coupled to said memory means and operable for starting a counting down of one digital readout means

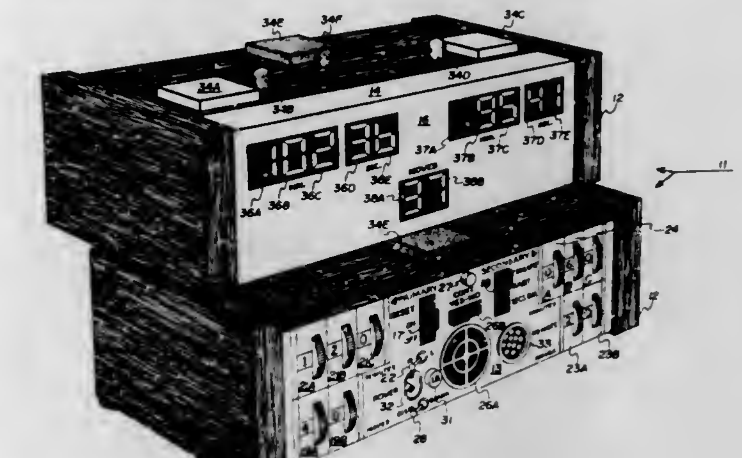

and stopping a countdown of the other of said first and second digital readout means; and

an add time means coupled to said memory means for adding any unused time from one period into a subsequent programmed period of time.

4,062,181

COMBINATION WATCH-CALCULATOR CONSTRUCTION

Rudolf F. Zurcher, Newport Beach, Calif., assignor to Hughes Aircraft Company, Culver City, Calif.

Filed Jan. 16, 1976, Ser. No. 649,885

Int. Cl.² G04B *37/00;* **H01H** *13/70*

U.S. Cl. 58—152 R **8 Claims**

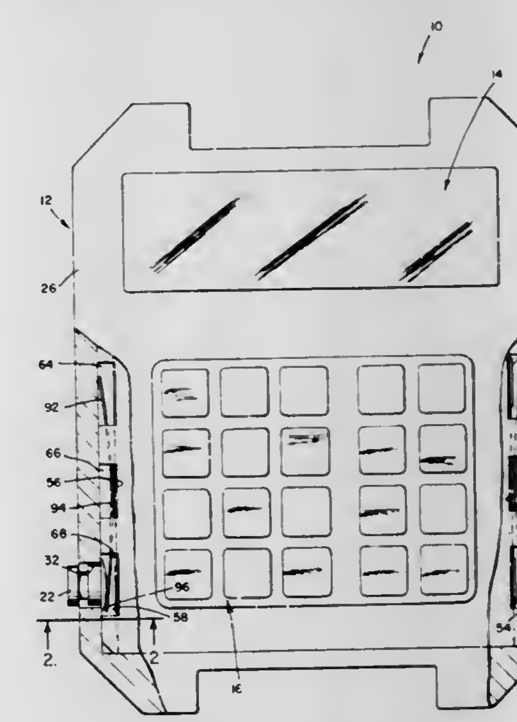

1. An electronic device comprising:

a case having a side wall;

a mounting block mounted within said case, a substrate mounted on said mounting block and electronic components mounted on said substrate, at least first and second electric contacts on said substrate lying along a line;

a metallic spring having first, second and third fingers extending from a rib, said rib resiliently holding said fingers along a line parallel to said rib, at least one of said lines being curved, said spring being mounted between said mounting panel and said case, said spring being formed so that said second finger resiliently engages said second contact on said substrate and said first finger is resiliently urged away from said first contact on said substrate; and

a manually operated actuator mounted on said case and

positioned to engage said first finger and move it into said contact with said first contact on said substrate so that electrical continuity is achieved from said first contact through said spring to said second contact.

4,062,182
COMBUSTION CHAMBER FOR GAS TURBINE ENGINES
Adolf Fehler, Pfaffing, and Gunter Kirchey, Munich, both of Germany, assignors to MTU Motoren-und Turbinen-Union, Munich, Germany
Filed Dec. 15, 1975, Ser. No. 641,086
Claims priority, application Germany, Dec. 21, 1974, 2460740
Int. Cl.² F02C *7/22*
U.S. Cl. 60—39.65 **4 Claims**

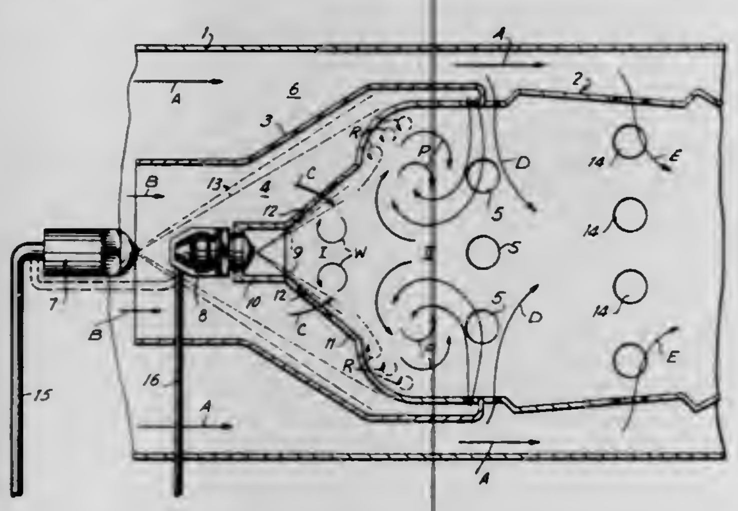

1. In a combustion chamber for gas turbine engines, including an outer housing; at least one flame tube inserted in said housing so as to form an annulus between the outer housing and the flame tube; means for supplying secondary air into said annulus; and means for supplying a primary zone inside the flame tube with fuel-enriched combustion air; an improvement comprising:

a. two independent fuel atomizer nozzles with respective mutually independently controllable fuel supplies in axial series arrangement within said flame tube so that combustion takes place entirely initially in a fuel-enriched combustion zone and thereafter in a second main combustion zone provided with a leaner amount of fuel in that sequence within the flame tube;
b. an air infeed hood encompassing said fuel atomizer nozzles and the upstream end of said flame tube so as to form a combustion air passageway between said hood and the flame tube, said passageway communicating with the first and second combustion zones respectively through first helical apertures and second further apertures formed in said flame tube;
c. said air infeed hood having a conically widening section, the fuel spray cone of the first of said two fuel atomizer nozzles extending within said combustion air passageway approximately parallel with said conically widening section of the air infeed hood, the spray cone of the second atomizer nozzle extending approximately parallel to the inner wall of a section of said flame tube which conically widens from the second atomizer nozzle so as to form the required space in the flame tube for the first combustion zone preceding the second main combustion zone, a cylindrical sleeve surrounding said second nozzle and connected to said conically widening section of the air infeed hood;
d. said conically widening section of said air infeed hood having a smaller cone angle than said section of the flame tube such that said passageway narrows in a direction away from said second atomizer nozzle;
e. said conical section of said air infeed hood having an end remote from said second atomizer and including a cylindrical portion extending from said end coaxially with said combustion zones and a radial portion on said cylindrical portion extending into said further apertures in said flame tube to divide these apertures into a first part communicating with the combustion air passageway between the flame tube and said hood and a second part communicating with the annulus between the flame tube and the housing such that secondary combustion products in said combustion air passageway which have passed said helical apertures are constrained to pass through said first part of said further apertures into said second combustion zone, while secondary air flowing in said annulus passes through said second part of said further apertures into said flame tube, said flame tube including a radial enlargement at the end of the conically widening section of the flame tube remote from the second atomizer nozzle.

4,062,183
FUEL SUPPLY SYSTEM FOR A GAS TURBINE ENGINE
David Omri Davies, Duffield, and Bruce Ernest Mills, Spondon, both of England, assignors to Rolls-Royce Limited, London, England
Filed May 24, 1976, Ser. No. 689,546
Claims priority, application United Kingdom, June 10, 1975, 24726/75
Int. Cl.² F02C *7/22*
U.S. Cl. 60—39.09 F **9 Claims**

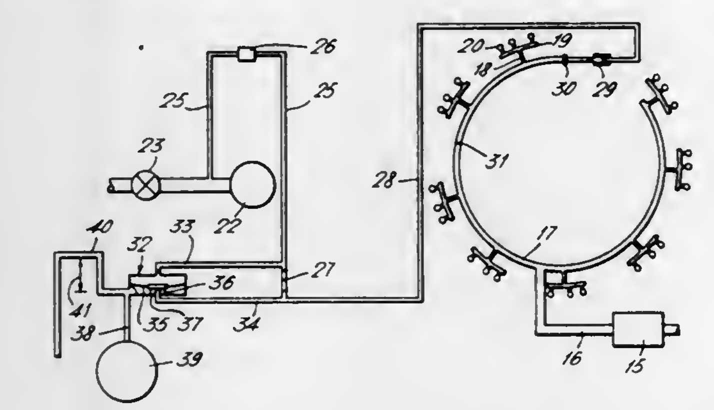

1. A fuel supply system for a gas turbine engine having compressor means, combustion chamber and turbine means in flow series:

a plurality of burners for injecting fuel into the combustion chamber;
fuel manifold means operatively connected to each of said burners for sypplying fuel thereto;
a source of compressed gas;
a compressed gas operated starting device operatively connected to the compressor means and/or turbine means for starting the engine;
duct means operatively connected to the source of compressed gas and to said compressed gas operated starting device and said fuel manifold means respectively, said duct means being arranged to supply compressed gas to said starting device for operating the same and to supply compressed gas to said fuel manifold means to act directly against fuel flowing therethrough to prevent fuel from being supplied to a predetermined number of burners; and
valve means in said duct means upstream of the connection of the duct means to said starting device and upstream of the connection to said fuel manifold means for simultaneously supplying compressed gas to the starting device and the manifold means.

4,062,184
CRYOGENIC FUEL EVAPORATION IN COMPRESSOR OF GAS TURBINE
Hermann Hagen, Dachau, Germany, assignor to Motoren- und Turbinen-Union Munchen GmbH, Munich, Germany
Filed Mar. 7, 1975, Ser. No. 556,502
Claims priority, application Germany, Mar. 20, 1974, 2413507
Int. Cl.² F02G *3/00;* **F02C** *7/16, 3/22*
U.S. Cl. 60—39.28 P **5 Claims**

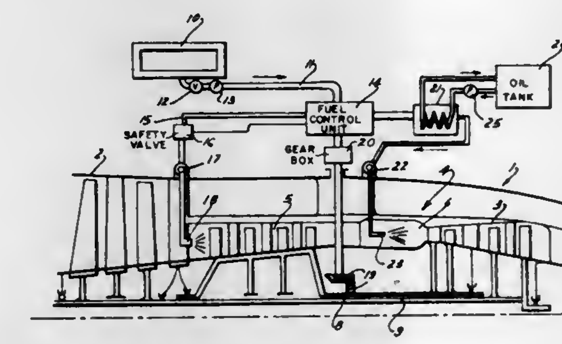

1. A gas turbine engine comprising:

a. a compressor, a combustion engine downstream from the compressor, and a turbine downstream from the combustion chamber,
b. a supply of liquid hydrogen,
c. means for injecting hydrogen from the supply into the combustion chamber,
d. means for injecting the hydrogen in a liquid state into the compressor at a point at least one stage downstream from the compressor intake, said stage being far enough from the compressor outlet so that the hydrogen evaporates before reaching the combustion chamber but the air temperature at said stage being high enough so as to prevent icing of the compressor intake or of the parts of the compressor first stage, and
e. means for controlling flow of hydrogen to the compressor so that hydrogen is injected into the compressor only when the engine is running above idle speed.

4,062,185
METHOD AND APPARATUS FOR WINDMILL STARTS IN GAS TURBINE ENGINES
Barton H. Snow, Wyoming, Ohio, assignor to General Electric Company, Cincinnati, Ohio
Filed May 13, 1976, Ser. No. 686,013
Int. Cl.² F02K *3/06, 3/12*
U.S. Cl. 60—204 **18 Claims**

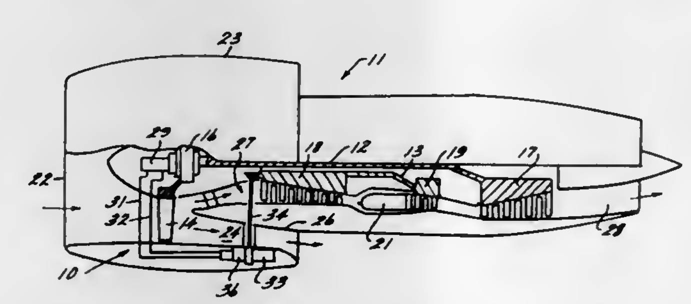

18. A method of starting a turbofan engine of the type having a compressor and a fan adapted to bypass a portion of the airflow around the compressor during engine operation and separate turbine means for driving the compressor and fan, comprising

a. connecting a power generation means to said fan to derive energy therefrom during selective periods in which it is rotating;
b. selectively connecting a motor means to said power generation means to derive energy therefrom during predetermined periods of operation; and
c. connecting said motor means to said compressor to rotate it to a speed sufficient to allow a windmill start of the engine.

4,062,186
APPARATUS FOR WINDMILL STARTS IN GAS TURBINE ENGINES
Barton H. Snow, Wyoming, and Frank R. Homan, Cincinnati, both of Ohio, assignors to General Electric Company, Cincinnati, Ohio
Filed May 13, 1976, Ser. No. 686,014
Int. Cl.² F02K *3/06, 3/12*
U.S. Cl. 60—226 R **11 Claims**

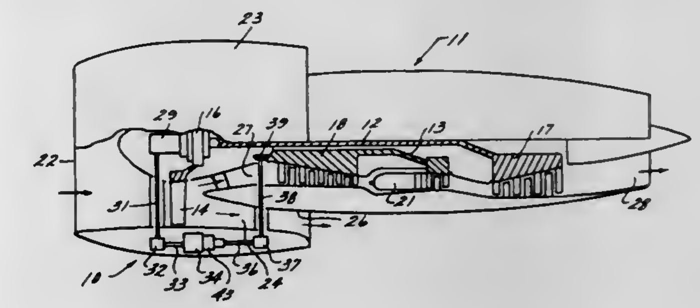

1. An improved air-start system for a turbofan engine of the type having compressor rotor and fan rotor assemblies independently driven by separate turbine means wherein the improvement comprises a torque converter drivingly connectable between said compressor and fan rotors during periods of in-flight windmilling such that the fan can be made to impart rotary motion to the compressor to accelerate it to a speed sufficient to accommodate an air start.

4,062,187
APPARATUS AND METHOD FOR CONTROLLING KINETICS OF TORQUE CONVERTER FOR HOIST DRUM DRIVE OF CRANE
Conrad R. Hilpert, Manor, Pa., assignor to Harnischefeger Corporation, W. Milwaukee, Wis.
Filed Aug. 5, 1976, Ser. No. 711,840
Int. Cl.² F16D *33/02*
U.S. Cl. 60—326 **26 Claims**

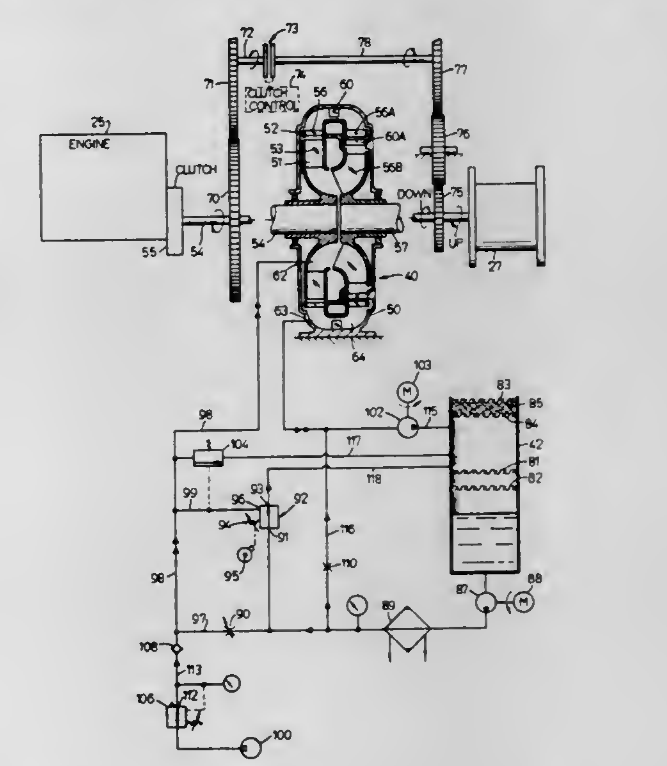

1. In combination:

a torque converter;
means for supplying to said torque converter a working fluid comprising a mixture of liquid and gas, said mixture being supplied at a predetermined but selectively variable volumetric rate;

means for selectively varying the volumetric proportion between the volume of liquid and gas supplied to said torque converter;

means for maintaining said working fluid at a pressure sufficient to inhibit cavitation;

means for removing working fluid from said torque converter at a fixed volumetric rate; and

degasser means for receiving the working fluid removed from said torque converter and for separating said liquid from said gas and for recovering said liquid.

4,062,188

TURBOCHARGER SYSTEM FOR AN INTERNAL COMBUSTION ENGINE

John Frederick Cutler, and Jai Krishen Khanna, both of Indianapolis, Ind., assignors to Wallace Murray Corporation, New York, N.Y.

Filed Mar. 31, 1976, Ser. No. 672,488

Int. Cl.² F02B *29/04, 33/40*

U.S. Cl. 60—599 **1 Claim**

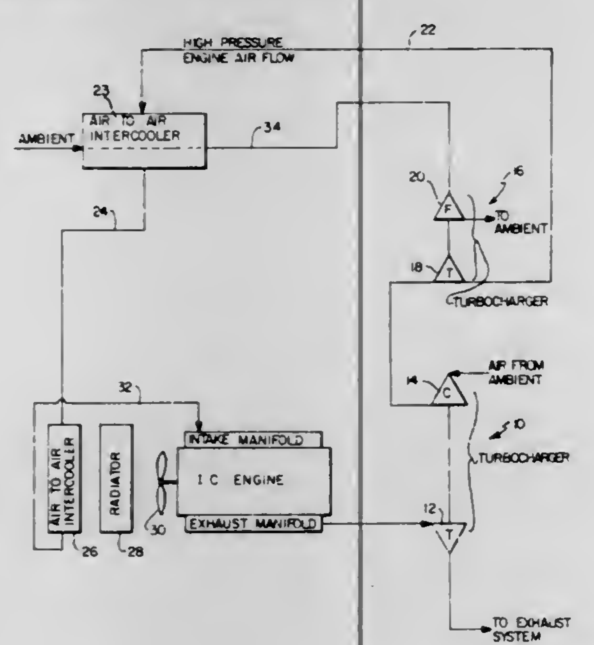

1. A turbocharger and internal combustion engine assembly including,

an internal combustion engine, having a radiator and an engine driven fan therefor,

a first turbocharger having a first turbine and a first compressor rotatably coupled thereto, the first turbine coupled to the exhaust gas energy output of the engine,

a second turbocharger having a second turbine and a fan rotatably coupled thereto, the output of the first compressor driving the second turbine,

the output of the second turbine feeding to a first flow path in a first air-to-air intercooler and through said first flow path to a first flow path in a second air-to-air intercooler, through the latter first flow path, and to the intake manifold of the engine,

said fan of the second turbocharger discharging to ambient, the input to said fan drawing ambient air through the second flow path in said first intercooler, the input to the latter flow path opening to ambient,

a second intercooler, said second intercooler positioned adjacent the radiator fan cooling air path of the engine, air in the radiator fan cooling path defining the second flow path of the second air-to-air intercooler the cooling air for the radiator defined by ram air or by air drawn by the fan.

4,062,189

METHOD OF PREVENTING THE ACCUMULATION OF MICRO-ORGANISMS IN THERMAL ENERGY CONVERSION SYSTEMS

David Mager, New York, N.Y.; William E. Heronemus, Amherst, Mass., and Peter M. J. Woodhead, Setauket, N.Y., assignors to Pacific Power and Protein, Inc., New York, N.Y.

Filed Sept. 29, 1976, Ser. No. 727,680

Int. Cl.² F03G *7/04*

U.S. Cl. 60—641 **12 Claims**

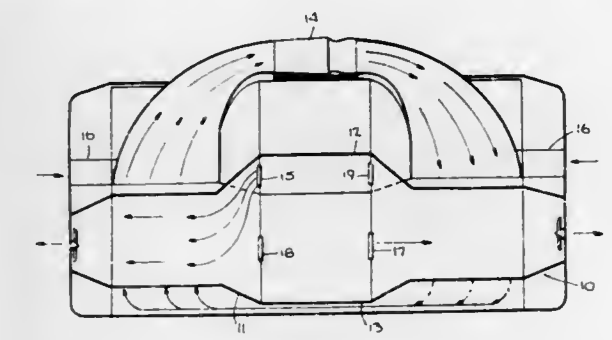

1. A method of preventing the accumulation of micro-organisms on the surface of a heat exchanger in a thermal energy converting system which comprises:

a. flowing warm surface sea water through a first heat exchanger to evaporate a working fluid contained therein;

b. driving a turbine generator with the evaporated working fluid from said first heat exchanger;

c. flowing the working fluid vapor from said turbine generator to a second heat exchanger;

d. flowing cold sea water to a second heat exchanger to condense the working fluid vapor; and

e. reversing the flow of sea water through said heat exchangers such that warm surface sea water is routed to said second heat exchanger to evaporate the working fluid contained therein and cold sea water is routed to said first heat exchanger to condense the working fluid vapor therein while the flow of the working fluid vapor through said turbine generator is from said second heat exchanger and the vapor discharged from said turbine generator is routed to said first heat exchanger whereby the accumulation of micro-organisms on the heat exchanger surface is prevented.

4,062,190

GAS TURBINE ENGINE

Lindsay Grahame Dawson, Loughborough, England, assignor to Rolls-Royce Limited, London, England

Filed Mar. 12, 1975, Ser. No. 557,838

Claims priority, application United Kingdom, Mar. 26, 1974, 13230/74

Int. Cl.² F02C *1/04, 7/00*

U.S. Cl. 60—682 **11 Claims**

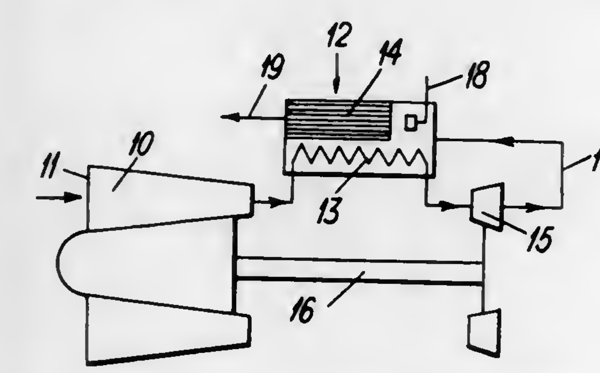

1. A system of the type comprising, in combustion, a heat engine and a heat input device, said heat engine having a gas working fluid wherein: said heat input device comprises a unitary heat exchange body having an extended surface against which surface burning of a fuel and oxidant mixture can take place, and a heat exchange surface forming part of the heat exchange body and in thermal contact with the extended surface, said heat exchange surface being directly heated by conduction of heat from the extended surface and adapted to transfer this heat to the working fluid of the engine.

4,062,191

HIGH FREEBOARD BARRIER CONSTRUCTION FOR WATER CARRIED POLLUTANTS

Paul Preus, 21 Smith Road, Toms River, N.J. 08753

Filed Oct. 5, 1976, Ser. No. 729,714

Int. Cl.² E02B *15/04*

U.S. Cl. 61—1 F **10 Claims**

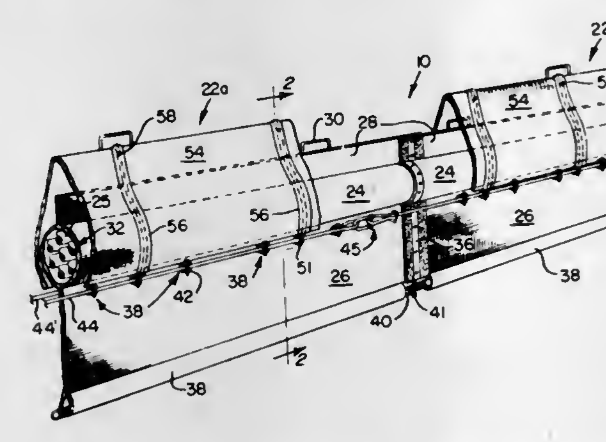

1. A high freeboard barrier for water carried pollutants comprising a plurality of hollow tubular floatation members each having a depending skirt, cable members extending along each side of the barrier, connector means interconnecting said cables and attaching said cables to the barrier at a plurality of spaced points, a plurality of upstanding spaced apart battens extending along each of said floatation members, means attaching each of said battens to its respective floatation member, and removable auxiliary fabric means supported by said battens and extending from at least below the water line of the barrier to substantially above the tubular floatation member to thereby increase the freeboard of the barrier.

4,062,192

METHOD OF AND MECHANISM FOR GENERATING WAVES SUITABLE FOR SURFING

Frank N. Biewer, San Diego, Calif., assignor to Offshore Technology Corporation, Escondido, Calif.

Continuation of Ser. No. 475,402, June 3, 1974, abandoned, which is a continuation of Ser. No. 333,726, Feb. 20, 1973, abandoned, which is a continuation-in-part of Ser. No. 136,064, April 21, 1971, abandoned. This application Feb. 18, 1975, Ser. No. 550,531

Int. Cl.² E02B *3/00;* **E04H** *3/18*

U.S. Cl. 61—1 R **12 Claims**

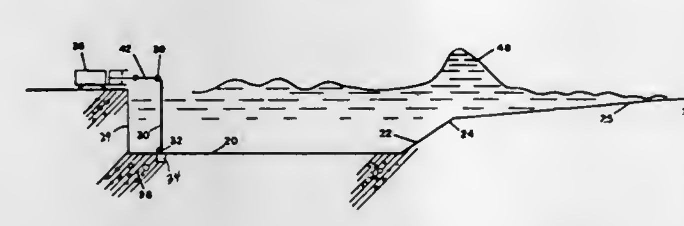

1. The method of generating waves suitable for surfing, along a shoal in a body of water, which method comprises the steps of:

generating constantly and cyclically, within an area in a body of water that is remote from the shoal, series of waves of increasing wave lengths and longer periods on a timing schedule wherein the later in time generated and faster travelling, longer period waves overtake the earlier in time generated and slower travelling, shorter wave length waves above the shoal and merge during each cycle to form a substantially single wave within a substantially confined area that lies substantially above the shoal.

4,062,193

BAND LOCK FOR THE IGNITION LOCK OF A MOTOR VEHICLE

Vincent Deleto, 25 Greenville Ave., Jersey City, N.J. 07305

Filed Sept. 8, 1976, Ser. No. 721,337

Int. Cl.² E05B *17/14*

U.S. Cl. 70—18 **3 Claims**

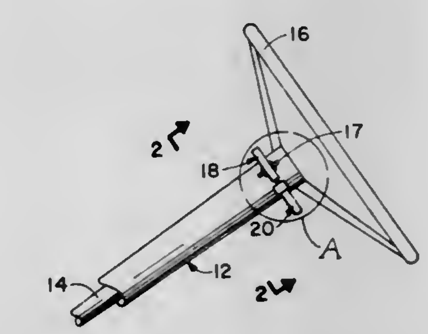

1. An anti-theft band lock for the ignition lock mounted on the steering column of a motor vehicle comprising in combination:

first and second arcuate arms hingedly connected at one end thereof and each of sufficient length to encircle a substantial segment of a steering column, said first arcuate arm having a tangentially extending section angularly spaced by at least 90° from the hinged connection of said arms and an end extension projecting perpendicularly from the outer extremity of said intermediate section adapted to be positioned across the keyhole opening of the ignition lock, said end extension of said first arm being provided at the outer extremity thereof with one of a pair of cooperable locking elements;

an arcuate yoke element integral with the intermediate section of said first arm adapted to be juxtaposed in close overlying relation to and at least partially encircling the housing of the ignition lock protruding from the steering column;

the second of said arms terminating in an end extension directed substantially perpendicularly to the end extension of said first arm and adapted to be juxtaposed in close axial relation to a diametrically opposed location of the ignition lock housing from said yoke, said second arm end extension having the second of said pair of locking elements whereby the band lock can be selectively locked to the steering column and the ignition lock shielded against unauthorized access thereto.

4,062,194

MINE ROOF SUPPORTS

Archelaius Dawson Allen, Leyland, England, assignor to Gullick Dobson Limited, Wigan, England

Filed Feb. 13, 1976, Ser. No. 657,936

Claims priority, application United Kingdom, Apr. 4, 1975, 13812/75

Int. Cl.² E21D *15/44*

U.S. Cl. 61—45 D **7 Claims**

1. A roof-engaging assembly for a mine roof support having prop or jack means to engage and support the roof-engaging assembly, comprising a rigid part to engage said prop or jack means, the rigid part having a roof-engaging face and a relatively stepped or recessed face below the roof-engaging face, a roof-engaging part positioned over said stepped or recessed face and resiliently urged away therefrom towards positions

above the roof-engaging face of the rigid part which, at least where it underlies the resiliently urged roof-engaging part, is of

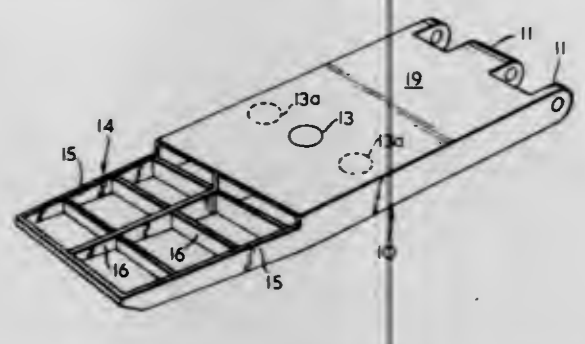

open-work or lattice-like construction to allow passage through of foreign matter.

4,062,195
METHOD OF BEDDING A CONDUIT USING CONTROLLED DENSITY FILL MATERIAL
William E. Brewer, Toledo, Ohio, and Franklin V. Zimmer, Southfield, Mich., assignors to K-Krete, Inc., Toledo, Ohio
Division of Ser. No. 475,579, June 3, 1974. This application Dec. 3, 1975, Ser. No. 637,407
Int. Cl.² F16L *1/04;* C04B *13/22;* B63B *35/04*
U.S. Cl. 61—72.4 **3 Claims**

1. A method for bedding a conduit which is laid in a trench, comprising removing the original soil and placing below the conduit a controlled density material consisting essentially of 2% to 6% by weight of Portland cement, 2% to 10% by weight of fly ash, 70% to 90% by weight of aggregate, and 5% to 15% by weight of water, the fill material being sufficiently placeable and flowable that tamping or vibrating is unnecessary and having a concrete-comparison 28-day compressive strength of less than 1400 psi, whereby the material may be easily re-excavated.

4,062,196
METHOD OF FORCIBLY INTRODUCING A CURVED STEEL PIPE INTO THE GROUND AND A MACHINE THEREFOR
Hiroshi Yoshida, Chiba; Yoshitaka Kuwabara, Tokyo, and Hideo Tsuchida, Yokohama, all of Japan, assignors to Nishimatsu Construction Company, Ltd., Tokyo, Japan
Filed Aug. 2, 1976, Ser. No. 710,854
Int. Cl.² F16L *1/02;* E21B *7/04*
U.S. Cl. 61—72.7 **3 Claims**

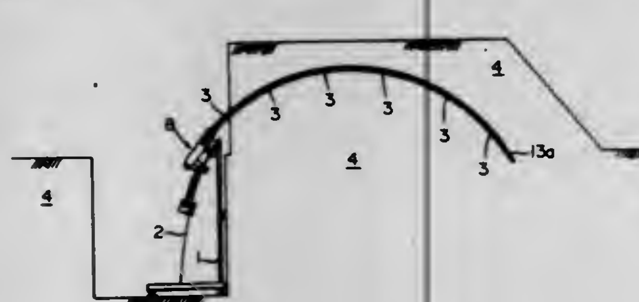

2. An apparatus for forcibly inserting a curved pipe into the ground comprising:
a support frame;
a guide on said support frame having a radius of curvature corresponding to the radius of curvature of said curved pipe;
movable excavation means slidable and adjustably positioned along said guide for holding said curved pipe and for excavating dirt from the location where said pipe is being inserted, said excavation means comprised of:
a carriage adjustably movable along said guide,
stopping means along said carriage for stopping and securing said carriage along said guide,
a motor having a shaft mounted on said carriage,
flexible auger means coupled to said shaft of said motor, and
securing member means surrounding said motor shaft and said auger means for securing said pipe around said auger means; and
jack means adjustably positioned along said guide at one end and connected to said excavation means at the other end for forcing said excavation means along said guide.

4,062,197
ABSORPTION HEATING-COOLING SYSTEM
Jarrett C. Hester, 206 Mountain View Lane, Clemson, S.C. 29631
Filed July 9, 1976, Ser. No. 703,836
Int. Cl.² F25B *15/00*
U.S. Cl. 62—101 **10 Claims**

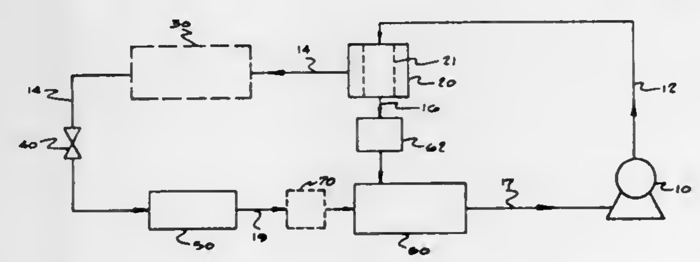

1. A method of effecting heat transfer in a closed system containing a refrigerant-absorbent solution comprising the steps of:
a. subjecting said refrigerant-absorbent solution under pressure to a semi-permeable membrane and osmotically separating by pressure differential the refrigerant from said solution thereat, while rejecting absorbent;
b. treating the separated refrigerant to effect a heat transfer in an affected area;
c. passing treated refrigerant, and the rejected absorbent enriched solution from said membrane to an absorber;
d. recombining the refrigerant and the absorbent enriched solution; and
e. pumping said recombined refrigerant-absorbent solution to said membrane, and repeating the cycle.

4,062,198
METHOD AND APPARATUS FOR THE LAYING OF A SUBMERGED PIPELINE SUCH AS A SUBMARINE PIPELINE
Jacques Edouard Lamy, Fontenay-aux-Roses, France, assignor to C. G. DORIS (Compagnie Generale pour les Developments Operationels des Richesses Sous-marines), Paris, France
Filed May 19, 1976, Ser. No. 687,908
Claims priority, application France, May 30, 1975, 75.16961
Int. Cl.² F16L *1/00*
U.S. Cl. 61—112 **12 Claims**

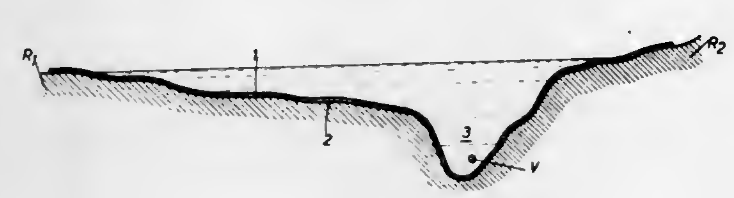

1. A method of laying a submerged pipeline on the bed of body of water along a path which crosses a ditch in said bed in which there is a current transverse to said pipeline, the depth of the body of water being at a maximum in said ditch, which comprises integrally associating with said pipeline at least one continuous ballast tube extending over the whole length of said pipeline, drawing said pipeline with said ballast tube from a position on shore towards open water along the bed of the body of water , so that a portion of said pipeline and associated ballast tube lies within said ditch, filling said ballast tube partly with air and partly with water which collects in the part of said ballast tube located in said ditch and remains in that position as

the ballast tube moves forward as the pipeline is drawn towards open water, whereby the apparent weight of the pipeline is increased solely with respect to the portion of said pipeline located for the time being in said ditch and thus its resistance to the current in said ditch transverse to said pipeline.

4,062,199
REFRIGERATING APPARATUS
Keisuke Kasahara, Tokyo; Sachio Hamaoka, Ibaragi; Youichi Katori, and Takaharu Mizuno, both of Ibaragi, all of Japan, assignors to Kabushiki Kaisha Maekawa Seisakusho, Tokyo, Japan
Filed June 23, 1976, Ser. No. 699,090
Claims priority, application Japan, June 24, 1975, 50-77898; Aug. 21, 1975, 50-101780
Int. Cl.² F25B *41/00*
U.S. Cl. 62—197 **10 Claims**

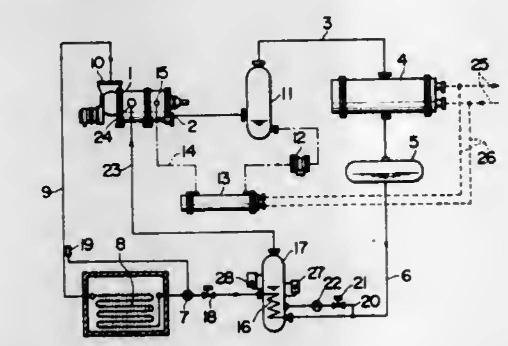

1. A refrigerating apparatus comprising a refrigerating cycle into which a screw compressor, a condenser, an expansion valve, and an evaporator are incorporated, and a liquid super cooler connected to a liquid pipe for connecting said condenser with said expansion valve, said liquid super cooler being cooled by a liquid coolant which is reduced in pressure and extracted from said pipe, and said screw compressor having a gas injection opening which is located at a position where the screw blades of the screw compressor have at least partially compressed the gas in the screw compressor and through which the gas coolant from the gas phase portion of the liquid super cooler is sucked into the screw compressor, wherein the position of the gas injection opening provided in the screw compressor and intended to pass the gas from the liquid super cooler into the screw compressor is limited under such a condition that

$V_i = 1.0 \sim 4.5$

in which

$$V_i = \frac{V_L}{V_H},$$

V_L represents the theoretically maximum screw space volume (m^3/h) in the screw compressor and V_H represents the screw space volume (m^3/h) at the position of the gas injection opening.

4,062,200
CONTAINER DISPENSING DEVICE
Leo V. Maisonneuve, 4480 N. 40th St., St. Petersburg, Fla. 33714
Filed Oct. 8, 1976, Ser. No. 730,979
Int. Cl.² F25B *1/00;* B26D *7/10;* B65H *1/08;* G07F *11/16*
U.S. Cl. 62—320 **16 Claims**

1. A portable dispenser for contents such as butter and the like comprising a body having a top and base attached at opposite ends thereof, said body including a receptacle to operatively retain the contents to be dispensed and a positioning mechanism, said base comprising a housing having a cutting aperture formed therein to receive the contents from said receptacle, a cutting element partially disposed within said cutting aperture and a cutting element guide formed on said housing, said cutting element guide extending across said base inclined at such an angle that said cutting element guide engages said cutting element as said cutting element moves from a first position to a second position, said body further comprising an actuator to simultaneously move said positioning mechanism and said cutting element to move the contents and said cutting element down at substantially the same rate as said

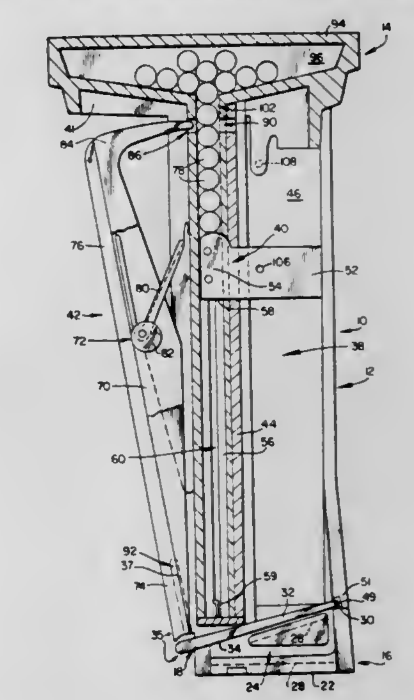

cutting element moves across said base from said first position to said second position, the bottom of said receptacle having an aperture communication with said cutting aperture to allow said positioning mechanism to move the contents from said receptacle into said base as said cutting element is moved from said first position to said second position to cut the contents at a predetermined thickness.

4,062,201
AUTOMATIC ICEMAKER INCLUDING MEANS FOR MINIMIZING THE SUPERCOOLING EFFECT
Frank A. Schumacher, and Marvel A. Elliott, both of Louisville, Ky., assignors to General Electric Company, Louisville, Ky.
Filed Oct. 15, 1976, Ser. No. 732,771
Int. Cl.² F25C *1/00, 1/10*
U.S. Cl. 62—353 **10 Claims**

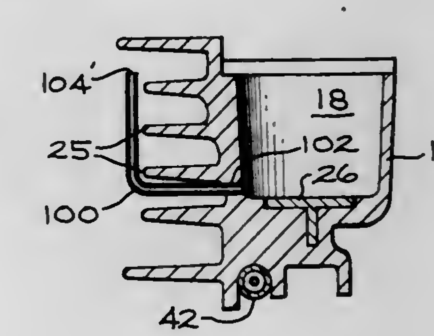

1. In a batch type automatic icemaker adapted for installation in the freezing compartment of a refrigerator and including a mold having an ice-forming cavity, means for filling said cavity with water, control means, and means responsive to the control means for removing ice pieces from the cavity, the improvement comprising:
a water-carrying member having first and second ends, said first end in fluid communication with the cavity for wetting by water therein, and said second end projecting into cold air within the freezing compartment;
whereby a small thermally isolated quantity of mold water is exposed to cold air at said second end and rapidly lowered to a temperature sufficiently low to reliably provide a seed

ice crystal to initiate freezing of water in the ice-forming cavity with a minimum of supercooling.

4,062,202
VIBRATORY WEIR ASSEMBLY AND METHOD FOR SEPARATING FOODS BEING FROZEN DURING FLUIDIZATION IN A FOOD FREEZING TUNNEL
Westley Ray Cloudy, Edmonds, Wash., assignor to Cloudy & Britton Inc., Edmonds, Wash.
Division of Ser. No. 482,781, Sept. 5, 1974, abandoned. This application Mar. 19, 1976, Ser. No. 668,634
Int. Cl.² F25D *25/04*
U.S. Cl. 62—380 **5 Claims**

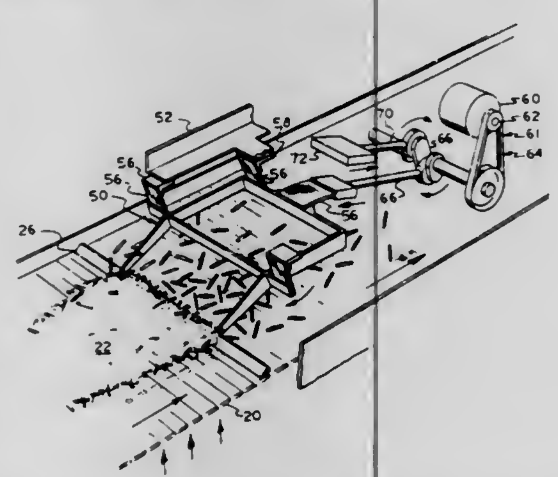

1. In combination with a food unit freezing tunnel having a non vibrating food unit conveyor operating throughout its length, a vibratory food weir assembly installed in the first portion of the food unit freezing tunnel, after freezing has commenced but well before the freezing has been completed, and operated while the food unit freezing tunnel is operated to cause the separation of all the food units from one another, if previously stuck together, before the food units are conveyed throughout the remainder of the freezing tunnel, the vibratory food weir assembly and food unit freezing tunnel comprising:

a. a food unit freezing tunnel having a non vibrating conveyor throughout its length,
b. a vibratory food weir assembly, comprising, in turn:
  1. an elongated transverse food weir serving as a bar like deflector-separator, when arranged immediately above and across a food unit non vibrating conveyor in the path of travel of the food units, to cause the food units to be intercepted briefly by the food weir, to pass upwardly over the food weir, and fall by gravity from the food weir immediately back onto the non vibrating food unit conveyor, after only leaving the non vibratory food conveyor for the very short distance under the food weir,
  2. means for vibrating the elongated transverse food weir to aid the separation of the food units, previously stuck together, as they are caused to pass upwardly over the food weir and immediately back down to the non vibrating food unit conveyor, and
  3. means to mount the vibrating means and elongated transverse food weir as a vibratory food weir assembly and mount the vibratory food weir assembly to the food unit freezing tunnel having the non vibrating food unit conveyor operating throughout its length.

4,062,203
TORQUE LIMITING DEVICE
Ralph R. Leonard, Kent, and Ted J. Taylor, Seattle, both of Wash., assignors to Industrial Analytics Inc., Kent, Wash.
Continuation-in-part of Ser. No. 506,601, Sept. 16, 1974, Pat. No. 3,942,337. This application Jan. 20, 1976, Ser. No. 651,283
Int. Cl. A01d *35/26*
U.S. Cl. 64—29 **3 Claims**

1. A torque limiting device comprising a means for selecting any torque limit value between minimum and maximum torque limit capabilities of said device comprising

an input shaft adapted for transmission of torque by means of a supplemental torqueing tool;
an output shaft adapted for coupling to a workpiece;
a housing surrounding said input and output shafts, said housing comprising first and second sections, one of said sections rotatable relative to the other section;
a clutch assembly disposed in said housing and interconnecting input and output shafts, said clutch assembly including two clutch members operative to separate and break the interconnection between said input-output shafts when the torque resistance to rotation of said input or output shaft exceeds a preselected torque limit value;

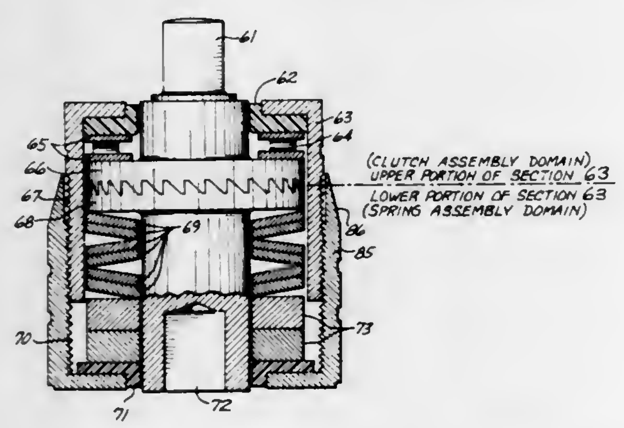

an anit-rattle spring means within the clutch-assembly-domain of said housing of one of said housing sections relative to the other for providing a small compressive force through a first of said two clutch members against the second of said two clutch members throughout the adjustable torque limiting range of said device to restrict the play between the first and second clutch members and,
further including a compressive spring assembly within the assembly-spring-domain of said housing for resisting separation of the variable gap existing between said two clutch members when the applied torque is transmitted by said input shaft to said output shaft.

4,062,204
HIGH LUSTER INTERLOCK FABRIC INCORPORATING PRODUCER TWIST YARNS
Mariano Segundo; Rodolfo Auerbach, and Rolando Antonio Juan Castellazzo, all of Buenos Aires, Argentina, assignors to Ancase S.A., Buenos Aires, Argentina
Continuation-in-part of Ser. No. 370,874, June 18, 1973, abandoned. This application June 12, 1975, Ser. No. 586,511
Int. Cl.² D04B *9/08, 1/16, 1/18*
U.S. Cl. 66—196 **2 Claims**

1. An elastic knit fabric characterized by a lustrous smooth surface and a soft hand comrising continuous filament producer twist synthetic yarn, not previously texturized or warped, knitted on a double bed circular knitting machine of interlock basis with a set up of alternately arranged long and short needles in each bed, according to a cycle of six interchanging interlock and jersey courses wherein the long needles only knit in the odd courses while only the short needles knit

in the even courses, said synthetic yarns in the jersey courses plaited with a polyurethane originated elastomeric yarn fed

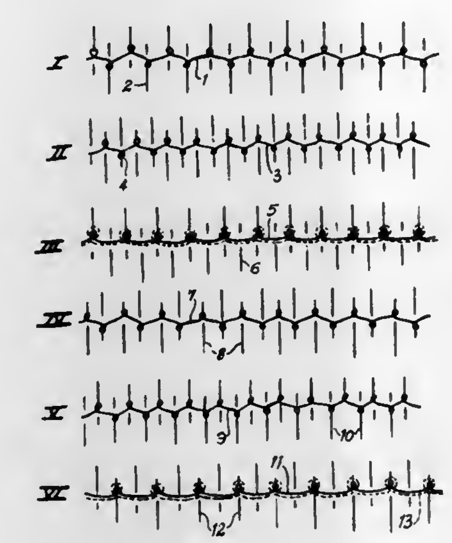

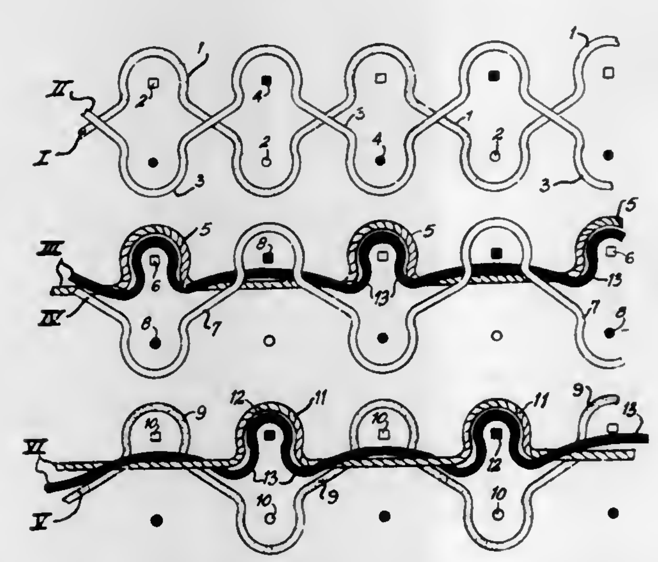

under tension, forming together with said continuous filament synthetic yarn said jersey stitch courses.

4,062,205
REUSABLE WATER SOFTENER SYSTEM FOR CLOTHES WASHER
Everett D. Morey, Louisville, Ky., and Eddie W. Dooley, Jeffersonville, Ind., assignors to General Electric Company, Louisville, Ky.
Filed July 23, 1976, Ser. No. 708,278
Int. Cl.² D06F *39/00*
U.S. Cl. 68—13 A **14 Claims**

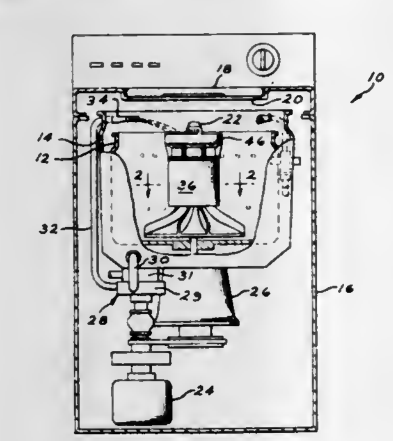

1. In a vertical axis clothes washer having a tub and agitator, a water softening system comprising:

a. a reusable, self-contained, water softener device including;
  i. a housing removably placed around the agitator and arranged for movement therewith,
  ii. a reservoir at the top of the housing for receiving water,
  iii. a plurality of vertical channels radially disposed around the agitator in flow communication and extending from the reservoir to the bottom of the housing,
  iv. a resin containing chamber within the housing, the top of said chamber having a water outlet and the bottom having a water inlet, and
  v. a pump chamber located between the bottom of each channel and the resin containing chamber, said pump chamber having pump means to force the water upwardly through the resin and out the outlet, and
b. means to pump water from the tub into the reservoir of the water softener device.

4,062,206
LOCKING LOAD BINDER
Delmer L. McWhorter, 929 Drever St., West Sacramento, Calif. 95691
Filed Oct. 8, 1976, Ser. No. 731,048
Int. Cl.² E05B *73/00*
U.S. Cl. 70—14 **3 Claims**

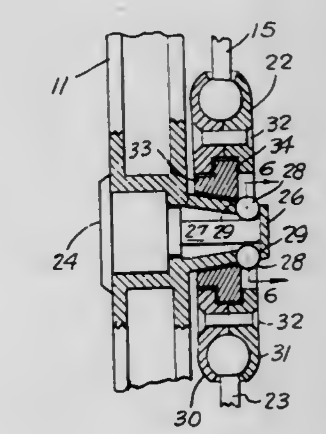

1. A locking load binder comprising an elongate handle, a pair of yokes secured to one end of said handle in an over dead center arrangement, a lock secured to said handle and having a conical lock boss integrally formed with said handle and extending outwardly therefrom, a keeper link secured to one of said yokes, a keeper disk mounted in said keeper link and having a conical bore opening therethrough, and means for detachably securing said lock boss in said bore in said keeper disk.

4,062,207
LOCK MOUNTING FOR ZIPPERED SECURITY BAG
Cletus D. Bonner, Beaver, Pa., assignor to Strayer Coin Bag Company, Inc., New Brighton, Pa.
Filed Aug. 10, 1976, Ser. No. 713,119
Int. Cl.² E05B *67/38*
U.S. Cl. 70—68 **9 Claims**

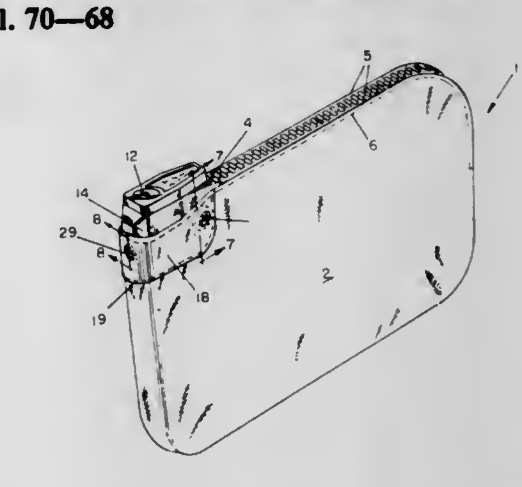

1. In a zippered flexible walled security container having an elongated access opening, a lock housing disposed within the opening adjacent one end thereof, a slide fastener for closing said opening and including a lacing element movable along the opening between an open position wherein it is remote from

the lock housing and a closed position wherein it is in close proximity to the lock housing and, in combination with the latter, closes the opening, a lock cylinder mounted for rotation in said housing, a keeper plate secured to the lock cylinder and projecting radially outwardly therefrom and adapted to overlie said lacing element and retain it in closed position, said lock housing having bores extending therethrough, apertures in said container adjacent one end and the access opening thereof, eyelet means affixed in said apertures, backing washer means associated with said eyelet means, and rivet means applied through said apertures and bores to mount said lock housing in said container whereby said backing washer means precludes button holing and disengagement of said rivet means and lock housing and back feeding of said slide fastener.

4,062,208
LOCKING MEANS FOR GAS VALVES
Anker J. Nielsen, Jr., 410 Bailey Road, Holden, Mass. 01520
Filed May 10, 1976, Ser. No. 684,671
Int. Cl.² F16K *35/00*
U.S. Cl. 70—178 **3 Claims**

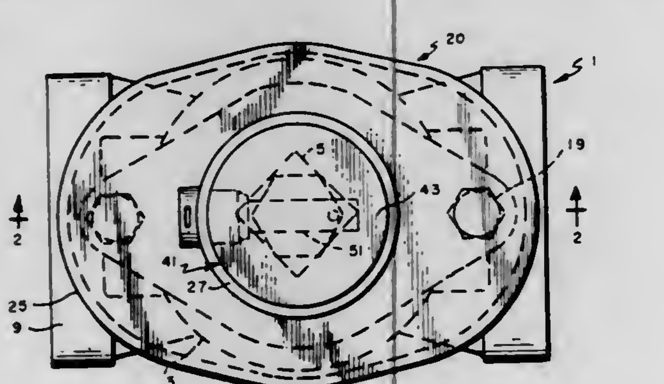

1. Locking means for a gas valve having in combination a body, a rotatable valve member therein, a valve stem for rotating such member and having an axial grease duct, a shroud fitting non-rotatably on the body and having a sleeve portion enclosing the valve stem, screw means engaging in the grease duct and fixing the sleeve portion of the shroud on the end of the valve stem, driving means for the screw means closing the end of the sleeve portion, and a bolt lock extending transversely of the sleeve portion preventing rotation of the driving means.

4,062,209
WHEELCHAIR LOCK
Harold A. Downing; Donald L. Rohrs, and Donald L. Collins, all of Hutchinson, Kans., assignors to Collins Industries, Inc., Hutchinson, Kans.
Filed Jan. 19, 1976, Ser. No. 650,308
Int. Cl.² A47C *7/00;* **B60R** *27/00*
U.S. Cl. 70—226 **12 Claims**

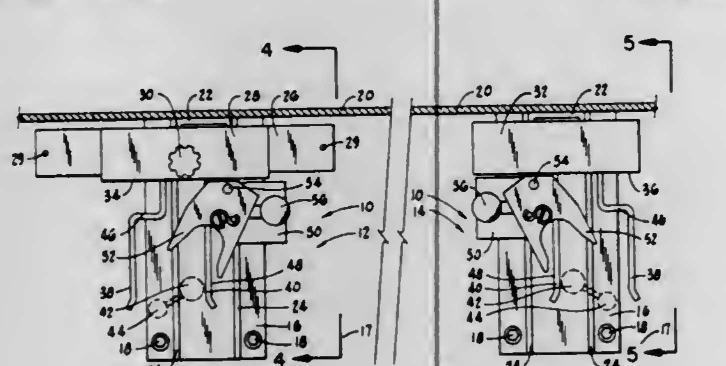

1. A wheelchair lock for securing a wheelchair, the wheelchair having a pair of ground wheels with a pair of hand wheels adjacent thereto, the lock comprising:

a first stand vertically disposed;

a pair of first guide arms horizontally attached to the top of said first stand and extending outwardly therefrom for receiving a portion of one of the ground wheels and a portion of the adjacent hand wheel; and

a first latch means attached to the side of one of said first guide arms, said first latch means receiving a portion of the ground wheel when the ground wheel is received between said first guide arms and securing the ground wheel between said first guide arms.

4,062,210
TIME LOCKS
Tim M. Uyeda, South San Gabriel, Calif., assignor to Sargent & Greenleaf, Inc., Nicholasville, Ky.
Filed Jan. 30, 1976, Ser. No. 653,892
Int. Cl.² E05B *43/00*
U.S. Cl. 70—268 **16 Claims**

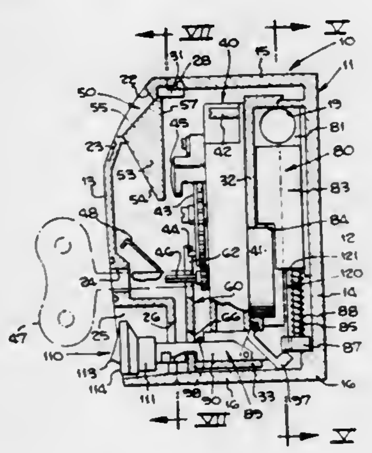

1. In a time lock having a housing, a clockwork mechanism mounted in said housing, a carrier assembly movably mounted in said housing, timed release means associated with said clockwork mechanism adapted to engage said carrier assembly at a preselected time to thereby move said carrier assembly, a snubber bar receiving aperture through said housing for receiving a snubber bar therethrough, snubber bar blocking means operatively engaging said carrier assembly and movable thereby when said carrier assembly is moved by said timed release means from a first position in blocking engagement in said aperture to a second position out of blocking engagement in said aperture, said snubber bar blocking means including an aperture in said carrier assembly and a lever assembly including a pivotal member located wholly rearwardly of said carrier assembly for movement about a stationary pivot axis and an elongated lever actuator extending through said aperture in said carrier assembly movable relative to the pivot axis in a longitudinal fore and aft direction generally normal to the carrier assembly between a forward position and a rearward position for controlling the position of the pivotal member, a block slidably mounted in said housing and having a depending extension portion, said pivotal member engaging the extension portion for movement of the block to the first position into blocking engagement in said snubber bar receiving aperture, said block being urged downwardly to the second position out of blocking engagement in said snubber bar receiving aperture at the forward position of the lever actuator and movable into blocking engagement therein by said lever assembly at the rearward position of the lever actuator, said carrier assembly aperture having abutment means thereon and said lever actuator having abutment engagement means thereon adapted to selectively engage said abutment means whereby said lever actuator is slidable forwardly through said carrier assembly aperture from said rearward position when said abutment engagement means is out of abutting relation with said abutment means and held at said rearward position in a fixed relation with respect to said carrier assembly when said abutment engagement means is in abutting engagement with said abutment means, and said lever actuator being manually tiltable upwardly while held in said rearward position by the interengaging abutment and engagement means to release the actuator to move to the forward position.

4,062,211
ROTARY PLUG CYLINDER LOCK
Harry C. Miller, 24 Seneca Ave., Rochester, N.Y. 14621, and Herman Edward Tickel, Jr., 14818 Woodhome Road, Centreville, Va. 22020
Filed Feb. 7, 1977, Ser. No. 766,539
Int. Cl.² E05B *29/04, 63/00*
U.S. Cl. 70—366 **9 Claims**

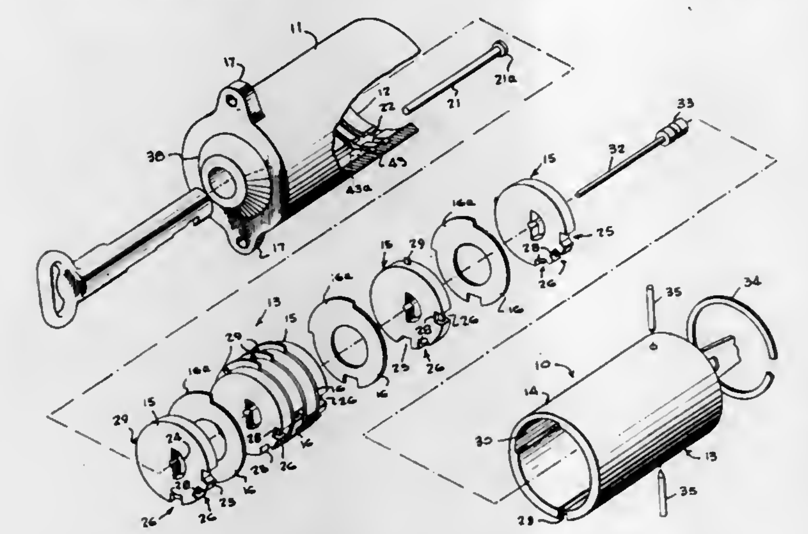

1. A cylinder lock of the rotatable disk tumbler type comprising a stationary cylinder casing, a rotatable plug assembly in said casing including an inner shell member rotatable in the casing and a plurality of locking disk tumblers encircled within said shell member and rotatable about a common axis therein, an elongated locking bar paralleling the axis of rotation of said disk tumblers adjacent the periphery thereof normally restrained by the disk tumblers at a position traversing the shear line between the inner shell member and the casing for locking the inner shell member against rotation relative to the casing, the disk tumblers being formed with substantially circular body portions having true gate recesses of appropriate depth alignable with and adapted to receive said locking bar to accommodate radial inward movmement of the locking bar relative to the disk tumblers to a position permitting rotation of the inner shell member relative to the casing and said tumblers having key openings therein collectively defining a forwardly opening keyway and shaped to be engaged and angularly moved by a key inserted therein for aligning the true gate recesses with the locking bar, said tumblers each having a tab formation projecting from the periphery of the circular portion thereof, said inner shell member having an inwardly opening, circumferentially elongated sector recess for receiving the tab formations projecting from each of the disk tumblers over a selected range of angular movement of the tumblers, the sector recess having an end wall defining stop surfaces for engaging the tabs and angularly positioning the tumblers to align their key openings at proper positions to receive a key therein, and the tab formation of each disk tumbler being a thin frangible member of less thickness than the circular body portion designed to be sheared from the thickness circular body portion of associated disk tumbler by engagement with end walls of the sector recess when torque forces exceeding a predetermined threshold value are applied to the tumblers.

4,062,212
KEY CASE
Ludolf Klein, Great Neck, N.Y., assignor to Richton International Corporation, New York, N.Y.
Filed June 1, 1976, Ser. No. 692,026
Int. Cl.² A47G *29/10*
U.S. Cl. 70—456 B **9 Claims**

1. A key case comprising a body portion formed of at least one sheet of flexible material that is bendable along fold lines formed transversely of said sheet, wherein a central portion is defined between said fold lines and is integrally joined to end portions, fastening means mounted on said end portions for securing said end portions in folded fastened relation, a key carrier assembly joined to said central portion for enclosure by said end portions and including a base plate and a carrier bracket joined to said base plate and on which a plurality of key retainers are releasably mounted, means joined to said central portion for releasably attaching to said key case an individual key that is used frequently, said frequently used key

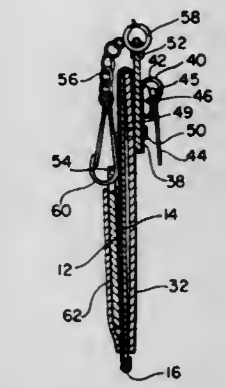

being normally located in exposed relation exteriorly of said body portion for ready access thereto, said attaching means including a first portion that is exposed of said central portion a second portion that is located adjacent to said base plate, wherein said frequently used key is readily accessible for use without moving said end portions to an open position for exposure of said key carrier assembly.

4,062,213
CONTROL SYSTEM FOR THE INITIATION AND/OR TERMINATION OF OPERATING STEPS OF PERFORATING, PUNCHING, CUTTING AND SHAPING PRESSES
Franz Schneider, and Helmut Braitinger, both of Goeppingen, Germany, assignors to L. Schuler GmbH, Germany
Filed Sept. 23, 1976, Ser. No. 725,723
Claims priority, application Germany, Oct. 13, 1975, 2545764
Int. Cl.² B21J *7/46*
U.S. Cl. 72—24 **15 Claims**

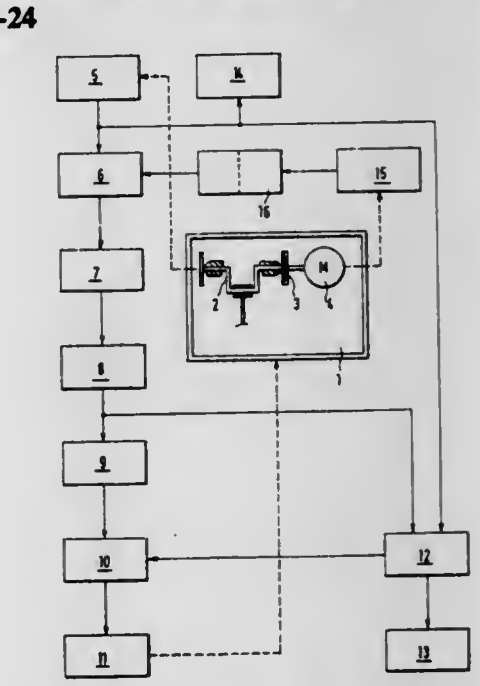

1. A control system for controlling operating steps of a press means comprising coded pulse generator means for providing a coded pulse output in dependence upon the position of a drive shaft of a press drive means, signal generator means responsive to the stroke rate of the press means for providing an output signal proportional to the stroke rate of the press means, summing means receiving the coded pulse output from said coded pulse generator means and the output signal of said signal generator means for providing a corrected coded pulse output, decoding means for decoding the corrected coded pulse output of said summing means for supplying a decoded pulse output, pulse distributor means for providing an output on at least one of a plurality of output paths in accordance with

the decoded output of said decoder means, and at least one regulating means for controlling an operating step being coupled to said pulse distributor means for receiving an output therefrom in accordance with the position of the drive shaft of the press means and the stroke rate of the press means.

4,062,214
APPARATUS FOR MEASURING CAMBER IN RAILS
Sigmund T. Mentzel, Crown Point, Ind., assignor to United States Steel Corporation, Pittsburgh, Pa.
Filed July 21, 1976, Ser. No. 707,392
Int. Cl.² B21C *51/00*
U.S. Cl. 72—34 **7 Claims**

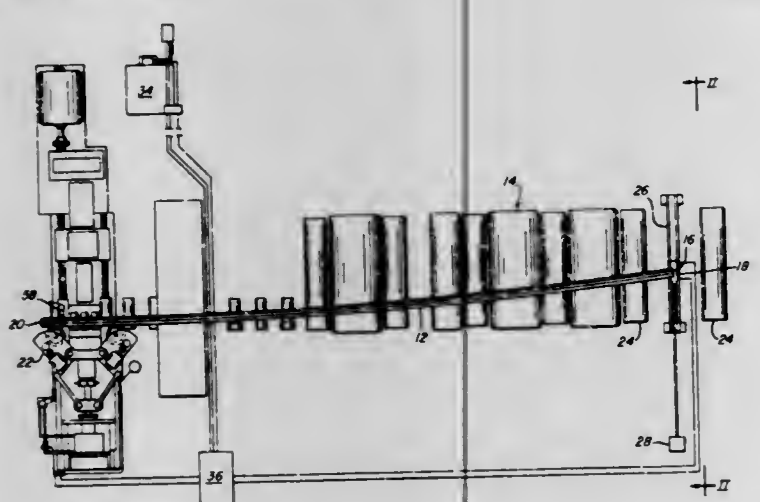

1. The combination, with a cambering machine and a runout table over which cambered workpieces travel on leaving said machine, of an improved apparatus for measuring the camber in a workpiece, said apparatus comprising:
a scanning head near the exit end of said runout table and including a plurality of phototransistors arranged in at least one row extending across the path of the workpieces in a position to be traversed by each workpiece;
a display device for indicating the extent of camber in each workpiece traversing said scanning head; and
circuit means connecting said phototransistors and said display device.

4,062,215
PROCESS FOR EXPANDING WHEEL COMPONENTS
Ralph E. Roper, Indianapolis, Ind., assignor to Wallace Expanding Machines, Inc., Indianapolis, Ind.
Division of Ser. No. 648,671, Jan. 13, 1976. This application June 11, 1976, Ser. No. 695,109
Int. Cl.² B21D *22/10*
U.S. Cl. 72—62 **5 Claims**

1. A process of making an expanded product which comprises:
a. providing a metal tubular workpiece;
b. presizing the tubular workpiece by expanding it and thereby plastically stretching it into a precise annular configuration, said presizing being to an extent that the presized tubular workpiece closely fits over a post element which has a pair of spaced annular outwardly facing recesses with annular liquid seals therein;
c. placing the presized tubular workpiece over a post element having a pair of spaced annular outwardly facing recesses with annular liquid seals therein, said placing being to an extent that the workpiece completely surrounds the annular liquid seals;
d. expanding the annular liquid seals on the post element to firmly engage and seal off a portion of the inside of the workpiece whereby the workpiece and post element and annular liquid seals define a sealed space;
e. positioning externally of the workpiece an outer die surface having the desired configuration for the finished workpiece;
f. and pumping liquid under pressure into the sealed space through a hole in the post element, said pumping being of

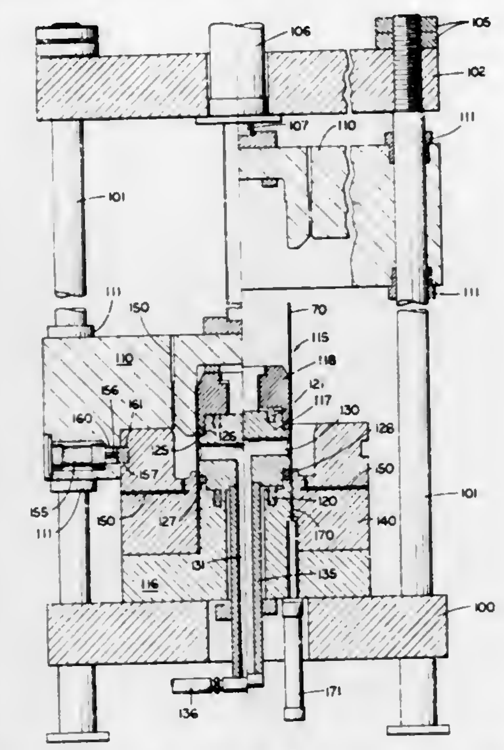

sufficient force to cause the workpiece to plastically deform outwardly against the outer die surface.

4,062,216
METAL BENDING METHODS AND APPARATUS
Yukimitsu Hanamoto, Yokohama, and Shigeki Unoki, Kobe, both of Japan, assignors to Daiichi Koshuha Kogyo Kabushiki Kaisha, Japan
Filed July 8, 1975, Ser. No. 593,961
Claims priority, application Japan, July 23, 1974, 49-83756; Sept. 13, 1974, 49-104873; Sept. 13, 1974, 49-104874; Sept. 27, 1974, 49-115691; May 30, 1975, 50-64956
Int. Cl.² B21D *7/16*
U.S. Cl. 72—128 **6 Claims**

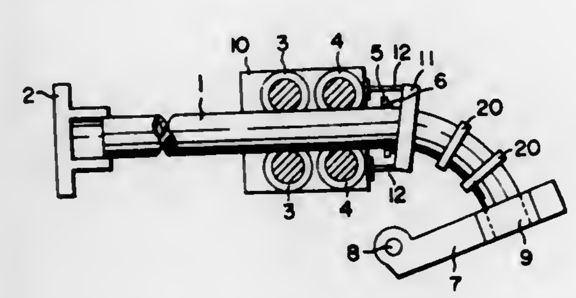

1. In a hot bending method for bending hollow, elongated material such as metal pipe in which material to be worked is passed through a heating device such as a high frequency inductor capable of effecting high temperature heating on a limited area, with a portion of said material being clamped to an arm pivotable in a bending plane about an axis in a plane generally perpendicular to the longitudinal axis of an unbent portion of the material, the arm having a length that matches the bending radius of the material, and then continuously and straightforwardly advancing the material while heating a portion of the material with the heating device to a plastic deformation inducing temperature and thereafter immediately followed by cooling with the application of a bending moment to the material to cause continuous plastic deformation in the heated portion of the material, the improvement wherein a crushing load is applied to a bent portion of the material near its high temperature plastic area from a direction normal to the plane of the bending, without applying any significant force in the plane of the bending, immediately following heating and cooling, thereby inhibiting flattening of the material to perform the desired bending.

4,062,217
RIVETING STATION ASSEMBLY
Robert J. Ebbert, 6026 DeGuise Ct., and John V. Brown, 657 Bridgestone Drive, both of Rochester, Mich. 48063
Filed July 15, 1976, Ser. No. 705,686
Int. Cl.² B21J *15/34*
U.S. Cl. 72—391 **10 Claims**

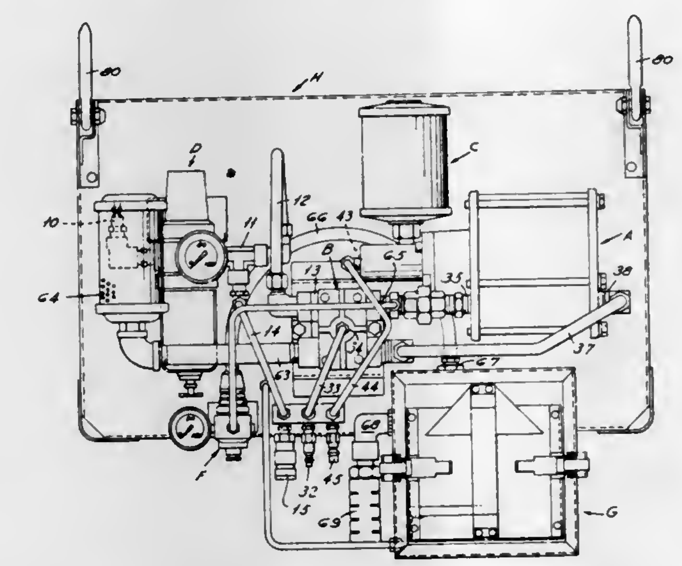

1. A riveting system comprising a power operated rivet setting tool requiring pressure for actuation and vacuum for a limited portion of its cycle, means for converting air pressure to vacuum including means for connection to a source of air pressure, means for blocking said connection, when rivet setting pressure isrequired, and means for unblocking said connection during said limited portion of said tool cycle.

4,062,218
CUTTING OR PRESSING APPLIANCES
Hans Wiener, Taby, Sweden, assignor to Pressmaster AB, Stockholm, Sweden
Filed Oct. 15, 1976, Ser. No. 732,596
Claims priority, application United Kingdom, Oct. 15, 1975, 42308/75
Int. Cl.² B21D *37/12*
U.S. Cl. 72—409 **11 Claims**

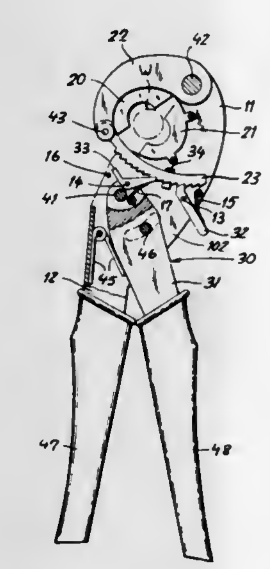

1. An appliance for gripping and deforming generally rod-shaped workpieces, comprising:
an elongate tool body with an extremity carrying a first jaw;
an actuating member articulated to said tool body, at a portion of said tool body adjoining said extremity, for relative swinging about a first pivotal axis;
an arm articulated to a tip of said extremity for relative swinging about a second pivotal axis parallel to said first pivotal axis, said arm carrying a second jaw confronting said first jaw and bracketing therewith a work space located between said pivotal axes; and
force-transmitting means linking said actuating member with a part of said arm separated from said tip by said second jaw for translating a swing of said actuating member in a predetermined direction with reference to said tool body into a movement of said jaws toward each other with exertion of clamping pressure upon a workpiece inserted into said work space, said force-transmitting means including a rack member secured to said part and a stepping pawl on said actuating member directly coacting with said rack member for intermittently advancing said jaws toward each other upon relative oscillations of said actuating member and said tool body, said working space being surrounded on all sides by said extremity, said arm and said rack member.

4,062,219
HYDRAULIC-FRICTIONAL SYSTEM FOR ROTATING THE ARM OF A FORGING MANIPULATOR
Nikola Tomov Chuparov; Dobri Tzvetkov Pakyov; Peter Nachev Papazov, and Tzvetan Mladenov Savov, all of Sofia, Bulgaria, assignors to VMEI "Lenin" - NIS, Sofia, Bulgaria
Filed Mar. 12, 1976, Ser. No. 666,213
Claims priority, application Bulgaria, Mar. 13, 1975, 29253
Int. Cl.² B21D *43/10, 43/11*
U.S. Cl. 72—422 **4 Claims**

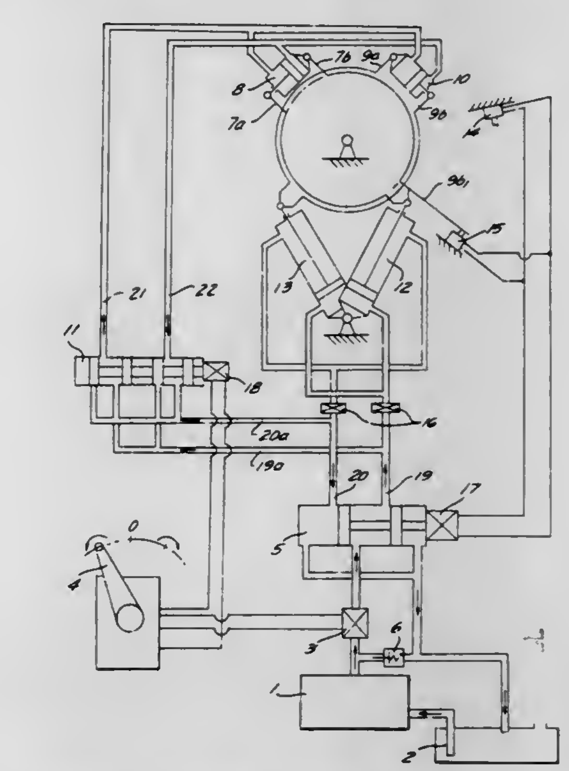

1. A hydraulic-frictional system for operating a forging manipulator, comprising:
a forging-manipulator arm journaled for rotation about a horizontal axis and carrying tongs engageable with a workpiece;
first and second clamps surrounding said arm and each having a pair of clamping jaws adapted to embrace said arm upon displacement of the jaws of each clamp toward one another and to allow free rotation of said arm relative to the respective clamps in a spread-apart position of the jaws thereof, each pair of jaws being pivotally connected at one end and being provided at its other end with a respective double-acting hydraulic clamping cylinder adapted to displace the jaws of each pair toward and away from one another;
respective double-acting power cylinders each pivotally connected to a separate one of said clamps, said power cylinders having a head chamber and a rod chamber;
conduit means hydraulically connecting pressurizable compartments of said clamping cylinders for inverse operation whereby one of said clamps seizes said arm while the other of said clamps permits free rotation thereof; and
means for alternately pressurizing one of said head or rod chambers of said power cylinders to rotate said first and second clamps, said one clamp seizing said arm and

thereby displacing it while the other of said clamps being rotated without affecting rotation of said arm.

4,062,220

FLUID MEASURING AND METERING SYSTEM

Frank Taube, Southfield, and Lawrence Lawson, Troy, both of Mich., assignors to Dominion Tool & Die Co., Inc., Roseville, Mich.

Filed July 9, 1976, Ser. No. 704,015

Int. Cl.² G01F ***25/00***

U.S. Cl. 73—3 **8 Claims**

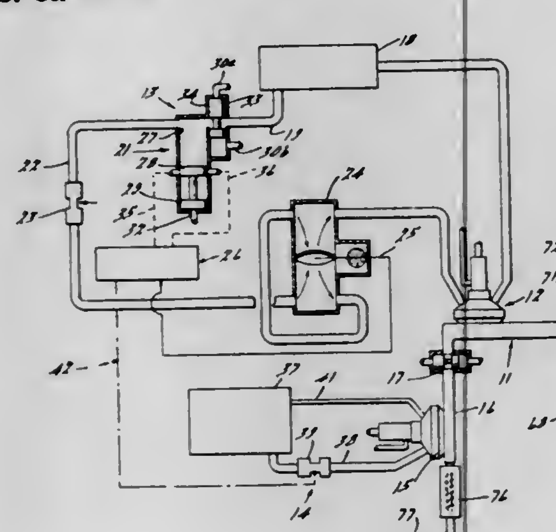

1. A system for measuring the flow of fluid in a conduit of a system comprising a dynamic flow measuring device in fluid communication with said conduit for measuring the rate of flow of the fluid in the conduit, volume measuring means for measuring the volume of fluid, valve means for selectively diverting at least a portion of the fluid flowing through the conduit into the volume measuring means and for returning the diverted fluid from the volume measuring means to the conduit for measuring the volume of fluid flowing through the conduit in a predetermined time interval, and means for comparing the two measured values.

4,062,221

HAND-PORTABLE SHOCK ABSORBER TESTER

Christian H. Oberheide, Arlington Heights; Edward Mikkelsen, and George E. Misthos, both of Glenview, all of Ill., assignors to Promotional Marketing Incorporated, Glenview, Ill.

Filed Dec. 16, 1976, Ser. No. 751,545

Int. Cl.² G01M ***17/04***

U.S. Cl. 73—11 **15 Claims**

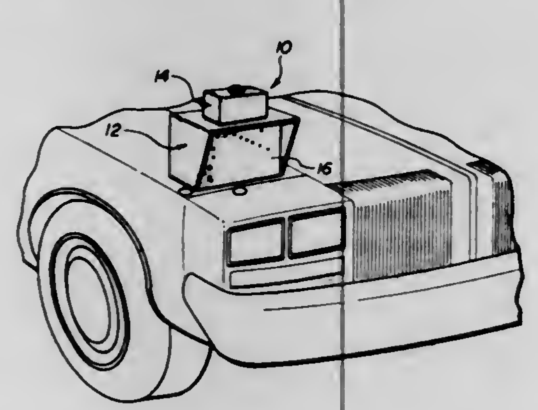

1. A hand-portable shock absorber tester for testing shock absorbers in situ on a parked automotive vehicle by detecting vertical movements of a sprung portion of the vehicle with respect to an unsprung portion thereof following an initial disturbing displacement of the sprung portion, said tester comprising an oscillation detector adapted to be removably mounted on the sprung portion of the vehicle and responsive to vertical oscillations thereof with respect to the unsprung portion for producing an output signal for each up or down movement of the strung portion; a display console coupled with said oscillation detector comprising counting means responsive to the output signals from said oscillation detector for counting same and producing a separate output indication for each output signal, and indicator means operated responsive to said output indications to provide a visual indication of the number of oscillations required for the sprung portion of the vehicle to return substantially to rest from the initial disturbing displacement thereof for indicating the condition of the shock absorber, said indicator means comprising a plurality of lights on a front display panel of said display console, the respective ones of said plurality of lights being consecutively energized responsive to said output indications and remaining energized until subsequently extinguished, thereby providing a semi-permanent visual indication of the number of said oscillations.

4,062,222

GOLF CLUB SWINGING APPARATUS

Karsten Solheim, 501 N. Wakanda Lane, Phoenix, Ariz. 85023

Filed Nov. 12, 1976, Ser. No. 741,219

Int. Cl.² G01N ***3/00***

U.S. Cl. 73—13 **12 Claims**

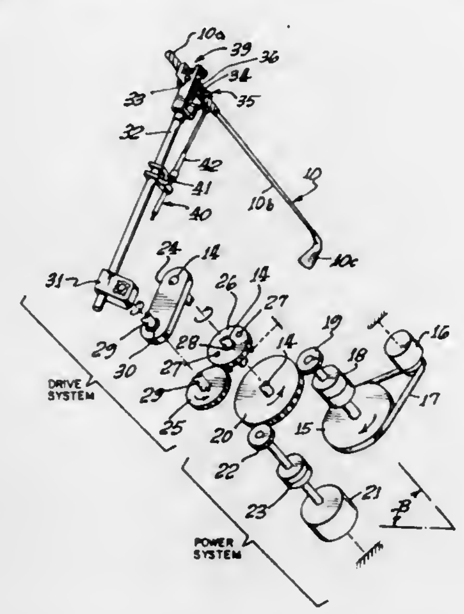

1. Apparatus for swinging a golf club to strike a golf ball for the purpose of testing the club or the ball, said club having a shaft with a grip at one end, said apparatus comprising

- a golf club swinging arm,
- a main drive shaft and means for driving said shaft through a predetermined angle with selected energy,
- a crank arm of selected length secured to said main drive shaft to be pivoted by said main drive shaft through said predetermined angle in a plane normal to said drive shaft,
- a fixed gear concentric with said main drive shaft,
- a secondary drive shaft parallel to said main drive shaft and supported by bearings at the free end of said crank arm,
- a planetary gear keyed to said secondary drive shaft and meshing with said fixed gear,
- means for securing said golf club swinging arm to said secondary drive shaft for driving said swinging arm through an angle greater than said predetermined angle and in an inclined plane normal to said secondary drive shaft, and
- pivotal means connected to the end of said club swinging arm securing said golf club at said grip to the end of said swinging arm.

4,062,223

NITROGEN CONTENT MONITOR FOR LIQUIFIED NATURAL GAS

David A. Lamphere, Milton, and Paul G. Weitz, Jr., Salisbury, both of Vt., assignors to Simmonds Precision Products, Inc., Tarrytown, N.Y.

Filed Sept. 9, 1976, Ser. No. 721,897

Int. Cl.² G01N ***25/18***

U.S. Cl. 73—27 R **8 Claims**

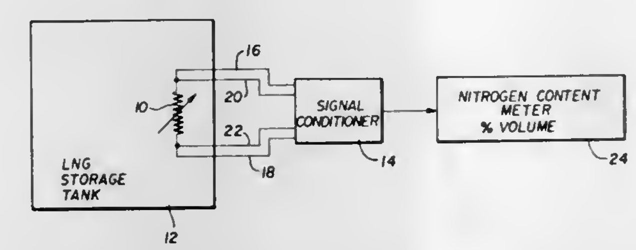

1. A nitrogen content monitoring system for determining the nitrogen content of stored liquified natural gas (LNG) having a known composition of liquified hydrocarbon gases and stored at atmospheric pressure, which comprises, in combination:

- temperature measurement means for producing a first electrical signal proportional to the temperature of the liquified natural gas;
- signal conditioning means for conditioning said first electrical signal to produce a second conditioned signal proportional to the nitrogen content of the liquified natural gas, said signal conditioning means including: means for producing a third reference signal which is equal to said first signal when the liquified natural gas contains no nitrogen; and means for subtracting said third reference signal from said first signal to produce said second conditioned signal; and
- readout means for indicating the nitrogen content of the liquified natural gas from said second conditioned signal.

4,062,224

BRAKE TESTER

Leo Z. Zeleney, Warren, Mich., assignor to Nucleus Corporation, Madison Heights, Mich.

Filed June 28, 1976, Ser. No. 700,097

Int. Cl.² G01L ***5/28***

U.S. Cl. 73—39 **9 Claims**

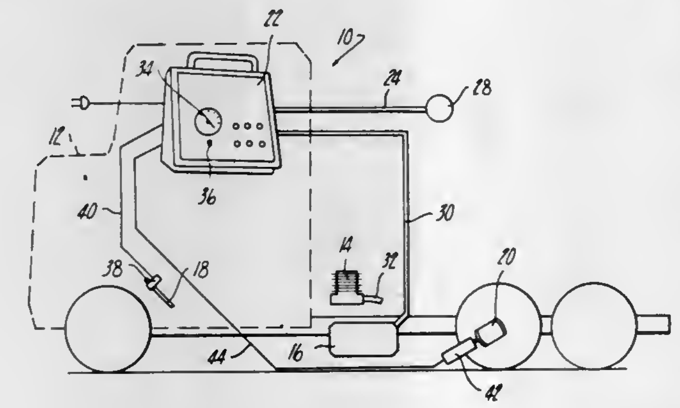

1. A brake tester for a vehicle having a fluid brake system, said system having a reservoir which fluidly communicates with a vehicle brake chamber upon actuation of a vehicle brake pedal, said brake tester comprising,

- a housing,
- valve means contained within said housing for controlling the fluid pressure within said reservoir,
- a pressure transducer operatively coupled with said brake chamber and adapted to generate an analog electrical output signal representative of the fluid pressure within the brake chamber, and
- circuit means for measuring the elapsed time between the depression of the brake pedal and the attainment of a first pressure within said brake chamber and for measuring the elapsed time between the subsequent release of the brake pedal and the attainment of a second pressure within said brake chamber, said second pressure being lower than said first pressure, said circuit means comprising:
- accelerometer means attached to the brake pedal which emits an output signal in response to movement of the brake pedal,
- an analog signal processor having an input coupled to the analog output signal from said pressure transducer wherein said signal processor generates a first timing signal upon the depression of said brake pedal and the attainment of said first pressure in said brake chamber and wherein said signal processor generates a second timing signal upon the release of said brake pedal and the attainment of said second pressure in said brake chamber,
- first timing means started by the signal from said accelerometer means and stopped by said first timing signal, and
- second timing means started by the signal from said accelerometer means and stopped by said second timing signal.

4,062,225

ROTATIONAL VISCOMETER AND PLASTOMETER

Robert J. Murphy, Jr., and Dwayne E. Ortman, both of Houston, Tex., assignors to NL Industries, Inc., New York, N.Y.

Filed Aug. 23, 1976, Ser. No. 716,719

Int. Cl.² G01N ***11/14***

U.S. Cl. 73—60 **3 Claims**

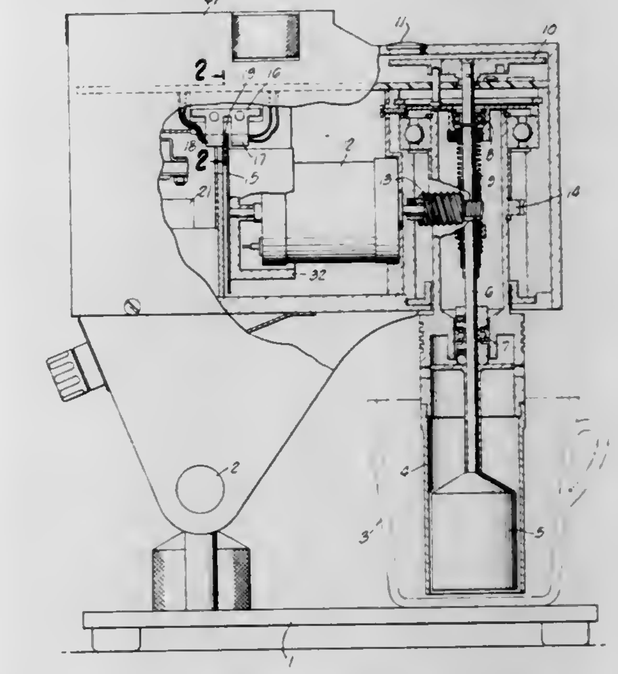

1. A concentric cylinder viscometer comprising, in combination, a cylindrical sleeve, means comprising a direct current motor for rotating said sleeve about its axis and means for rotating the sleeve at any of several pre-selected rotation rates; a cylinder disposed coaxially within said sleeve to provide an annular space betwen said sleeve and said cylinder; means for determining and registering the torque exerted on said cylinder upon rotating said sleeve when said annular space is occupied by a viscous fluid; incremental encoder means attached to said motor; means for deriving an electrical signal to said motor; means for deriving an electrical signal from said incremental encoder means indicative of the frequency of rotation of said motor; fixed frequency oscillator and divider means adapted to provide a plurality of pre-selectable frequencies; phase comparator means adapted to directly compare the encoder frequency to any of the oscillator frequencies; selector switch means for feeding any of said oscillator frequencies into said phase comparator; circuit connection means for feeding said electrical signal from said incremental encoder means into said phase comparator, and amplifier means operatively connected to said phase comparator adapted to provide a direct current

voltage of sufficient magnitude to drive said motor at the speed determined by said pre-selected frequency.

4,062,226
DEVICE FOR MEASURING PULP STOCK CONSISTENCY
Veijo Hietala, Tampere, Finland, assignor to Valmet Oy, Finland
Filed Apr. 14, 1976, Ser. No. 677,060
Claims priority, application Finland, Apr. 18, 1975, 751172
Int. Cl.² G01N *11/00*
U.S. Cl. 73—63 **7 Claims**

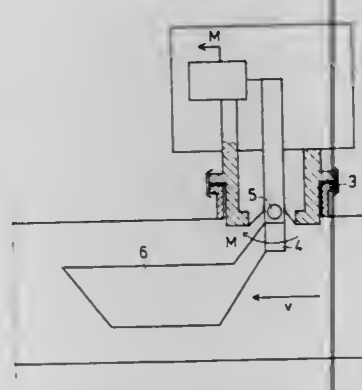

1. In a device for measuring the consistency of pulp stock flowing in a given direction along the interior of a conduit means, carrier shaft means extending transversely with respect to the direction of flow of stock in said conduit means, sensing means carried by said carrier shaft means and extending therefrom into the stock in said conduit means in the downstream direction of stock flow from said carrier shaft means for shearing the flowing pulp stock and for producing in response to engagement with the flowing pulp stock a torque capable of being measured for indicating the consistency of the pulp stock, and support means supporting said carrier shaft means and sensing means carried thereby for adjustable angular movement to a selected position about an axis perpendicular to said carrier shaft means and also extending transversely with respect to the direction of stock flow, said sensing means having a surface in a plane which is oblique with respect to said carrier shaft means and axis for deflecting the flowing stock in a manner depending upon the extent and direction of angular adjustment of said carrier shaft means and sensing means with respect to said axis from a neutral position where said oblique surface extends in the direction of flow of the stock, so that depending upon the angle of adjustment with respect to said axis the deflection of flow provided by said oblique surface will provide a torque of a given direction and magnitude depending upon the velocity of flow of the stock, with respect to said carrier shaft means and sensing means.

4,062,227
CW ULTRASONIC BOLT TENSIONING MONITOR
Joseph S. Heyman, Gloucester, Va., assignor to The United States of America as represented by the Administrator of the National Aeronautics and Space Administration, Washington, D.C.
Filed Dec. 23, 1976, Ser. No. 754,066
Int. Cl.² G01N *29/00*
U.S. Cl. 73—630 **9 Claims**

1. A CW ultrasonic device for monitoring frequency shifts of the peak frequency of a mechanical resonance of a body comprising:
transducer means including a transmitter means attached to said body for changing electrical signals into sound waves for transmission into said body and including a receiver means attached to said body for receiving sound waves from said body and changing the received sound waves into electrical signals:
electrical circuit means connected between said receiver means and said transmitter means for forming a closed loop marginal oscillator with said body that oscillates at a resonant frequency of said body; and

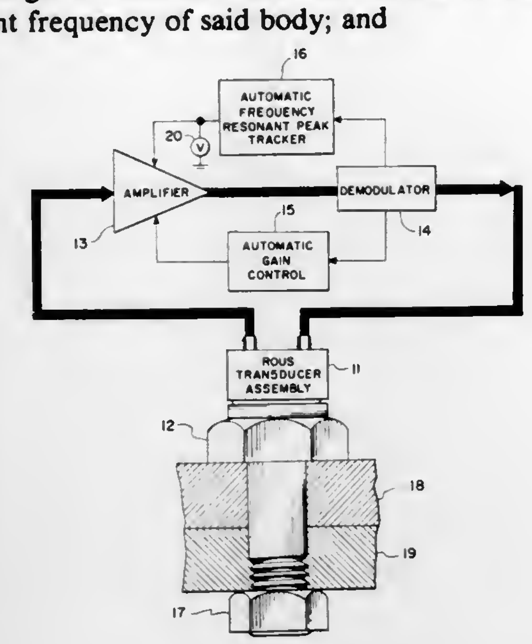

means for measuring any shift in frequency of said oscillator whereby the shift in frequency is indicative of a frequency shift of the peak frequency of a mechanical resonance of said body.

4,062,228
POWDER MOISTURE METER
William H. Peak, Albany, N.Y., assignor to Donald P. Matula, Schenectady, N.Y., a part interest
Filed Apr. 12, 1974, Ser. No. 460,569
The portion of the term of this patent subsequent to Oct. 13, 1993
Int. Cl.² G01N *5/00*
U.S. Cl. 73—74 **6 Claims**

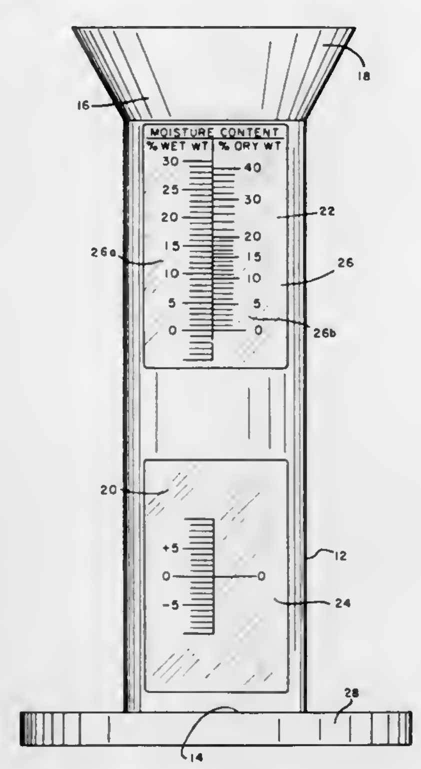

1. A powder moisture meter, comprising:
a. an open-mouthed container comprising first and second transparent wall portions, said second wall portion being disposed between said first wall portion and the container mouth;
b. first graduated scale means at said first wall portion for calibrating said meter by adjusting according to the particular characteristics of said powder to be tested, the direct determination of the moisture content of said powder;
c. second graduated scale means at said second wall portion for directly determining the moisture content of said powder, said second scale means comprising divisions for measuring said moisture content on at least one of a wet weight and dry weight bases, said first scale means permitting the reading of said second scale means to be so adjusted.

4,062,229
METHOD OF TESTING THE INTEGRITY OF INSTALLED ROCK BOLTS
David E. Godfrey, and Norman R. Kuchar, both of Burnt Hills, N.Y., assignors to General Electric Company, Schenectady, N.Y.
Filed Feb. 22, 1977, Ser. No. 770,697
Int. Cl.² G01N *29/00*
U.S. Cl. 73—88 F **8 Claims**

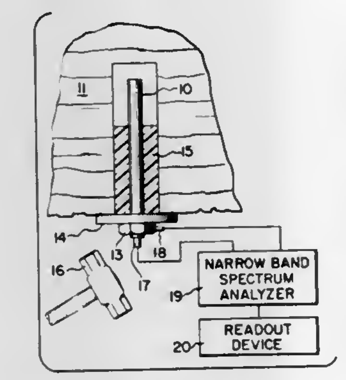

1. A method of testing the integrity of the anchoring of a rock bolt anchored within an elongated hole in a rock-like substance and having an externally accessible base comprising the steps of
striking the base of said rock bolt to induce acoustic vibrations therein and excite at least one selected vibration mode thereof,
sensing the vibrations of said rock bolt and generating an electrical signal representative of said vibrations, and
measuring the amplitude of said electrical signal at a plurality of discrete narrow frequency bands covering a predetermined frequency range and deriving the resonant frequency of said selected vibration mode as an indication of the integrity of the anchoring of said rock bolt.

4,062,230
FUEL MILEAGE INDICATOR
Julius P. Perr; Peter W. Schutz; Patrick R. Badgley, and Edgars Valdmanis, all of Columbus, Ind., assignors to Cummins Engine Company, Inc., Columbus, Ind.
Filed Aug. 25, 1976, Ser. No. 717,775
Int. Cl.² G01F *9/02*
U.S. Cl. 73—114 **7 Claims**

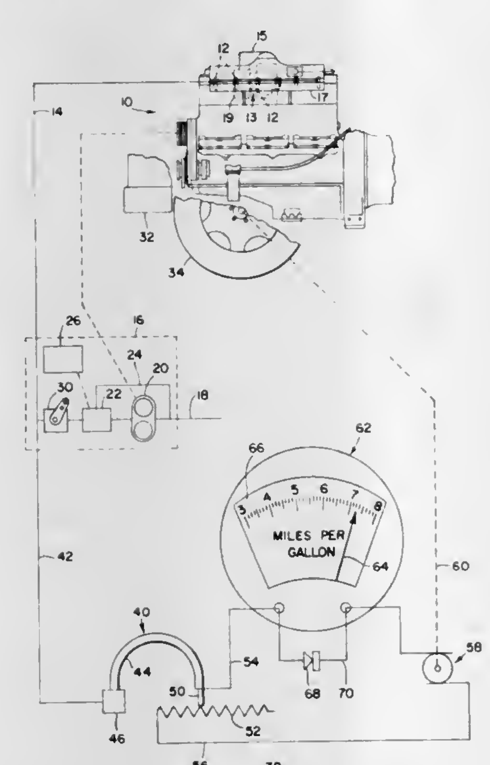

1. An apparatus for indicating fuel mileage in terms of the ratio between distance traveled and engine fuel consumption for a vehicle powered by an engine of the compression ignition type having unit fuel injectors and a fuel delivery system producing a fuel pressure substantially proportional to fuel flow, said vehicle having ground drive wheels, said apparatus comprising:
means for generating a first signal substantially proportional to the fuel pressure of said fuel system;
means for generating a second signal substantially proportional to the velocity of said vehicle;
means for dividing said second signal by said first signal; and
means connected to said dividing means for indicating fuel mileage.

4,062,231
ENGINE COOLING SYSTEM DIAGNOSTICS
Henry J. Mercik, Jr., and Lee R. Armstrong, both of Enfield, Conn., assignors to United Technologies Corporation, Hartford, Conn.
Filed May 7, 1976, Ser. No. 684,218
Int. Cl.² G01L *3/00*
U.S. Cl. 73—116 **6 Claims**

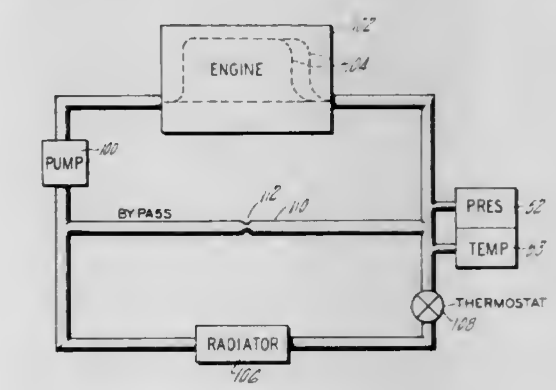

1. In the method of diagnosing the cooling system of an engine, the steps of:
operating the engine at substantially a low idle speed and at substantially a high idle speed;
determining that the thermostat in the cooling system is closed; and
at each of the speeds measuring the coolant pressure between the pump and the thermostat.

4,062,232
TESTING COMPRESSION IN ENGINES FROM STARTER MOTOR CURRENT WAVEFORM
Eldon Marvin Sutphin, Jr., Merrimack, N.H., assignor to RCA Corporation, New York, N.Y.
Filed Oct. 12, 1976, Ser. No. 731,209
Int. Cl.² G01M *15/00*
U.S. Cl. 73—117.2 **4 Claims**

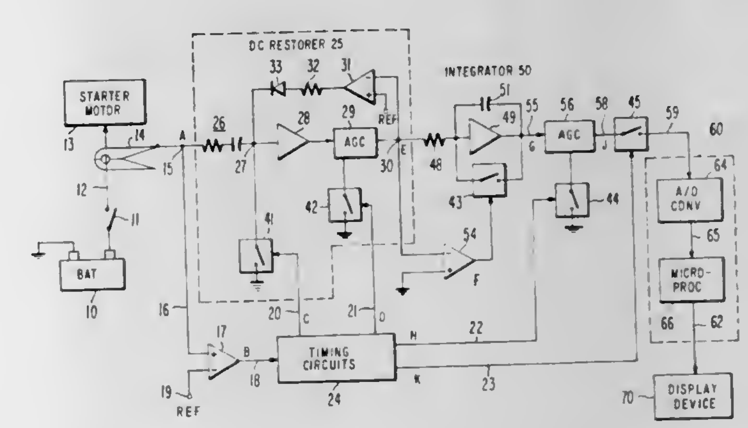

1. Apparatus to detect unsatisfactory compression in individual cylinders of an internal combustion engine having compression strokes, comprising

means for detecting the starter motor current waveform when the engine is cranked with the ignition or fuel inhibited, said waveform having cycles each corresponding with at least one compression stroke,
means for integrating the area under each of said cycles to produce corresponding integration signals, and
means for comparing the amplitudes of the smallest and largest integration signals and indicating when their ratio is less than a predetermined value, whereby to register unsatisfactory compression in at least one of the cylinders of the engine.

4,062,233
DYNAMOMETER
Melvin Bonomo, 109 S. Regency Drive, Bloomington, Ill. 61701
Filed Sept. 7, 1976, Ser. No. 720,647
Int. Cl.² G01L *3/16*
U.S. Cl. 73—135 **19 Claims**

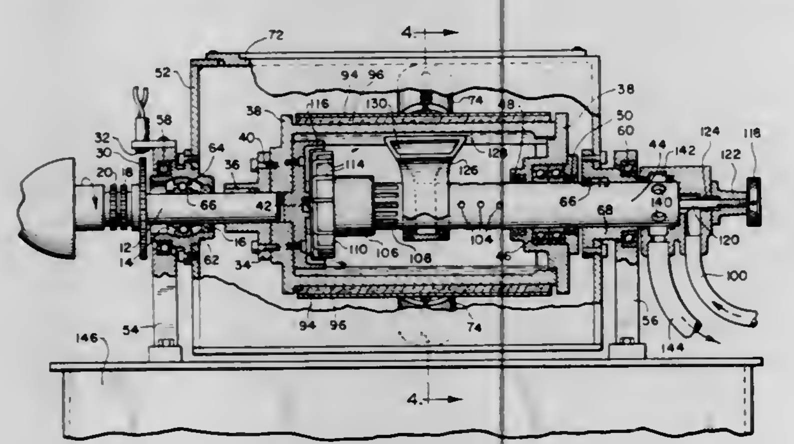

6. A dynamometer, comprising:
a housing;
a drum rotatably mounted within said housing;
a drive shaft coupling one end of said drum to a prime mover positioned exterior to said housing;
means connected with said housing for frictionally engaging the external surface of said drum;
means for measuring torque transmitted to said housing by said engaging means upon the rotation of said drum; and
means for circulating a coolant through the interior of said drum, said circulating means including a central shaft extending through the other end of said drum into the interior thereof, said coolant being supplied to and discharged from the interior of said drum through said central shaft.

4,062,234
DYNAMOMETER TEST STAND
Harold H. Bartlett, Jr.; Charles H. Herr, Jr.; Lionel L. Kinney; Ivan R. Lamport, all of Peoria, Ill., and Clarence A. Welch, Bettendorf, Iowa, assignors to Caterpillar Tractor Co., Peoria Ill.
Filed Jan. 28, 1977, Ser. No. 763,315
Int. Cl.² G01L *5/13*
U.S. Cl. 73—135 **17 Claims**

11. A method of testing a mobile mechanical power source having a rotary power output comprising the steps of:
supporting the mobile mechanical power source on a stand with its rotary power output exposed and free from engagement with surrounding structure;
providing a dynamometer with a rotary chuck input in substantial axial alignment with said output but spaced therefrom;
axially advancing and nonaxially shifting, if necessary, at least the chuck to bring the chuck into axial positive engagement with said output; and

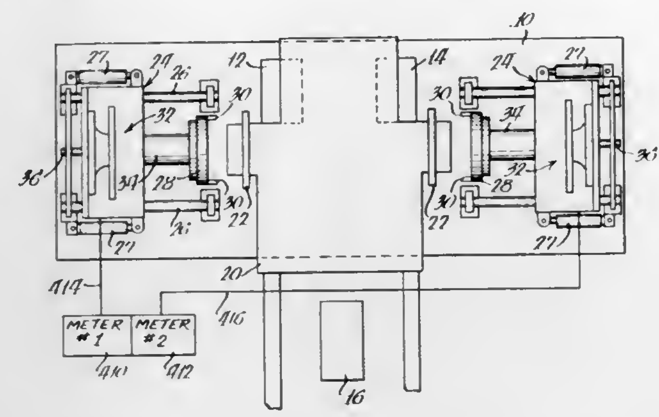

operating the mobile mechanical power source to drive the dynamometer.

4,062,235
TWIN-BELT CONTINUOUS CASTING WHEREIN THE BELTS ARE SENSED BY MECHANICAL PROBES
Robert William Hazelett, Winooski, and John Frederick Barry Wood, Burlington, both of Vt., assignors to Hazelett Strip-Casting Corporation, Malletts Bay, Winooski, Vt.
Division of Ser. No. 602,579, Aug. 7, 1975, Pat. No. 4,002,197, which is a division of Ser. No. 414,237, Nov. 9, 1973, Pat. No. 3,937,270. This application June 9, 1976, Ser. No. 694,378
Int. Cl.² G01L *5/04*
U.S. Cl. 73—159 **2 Claims**

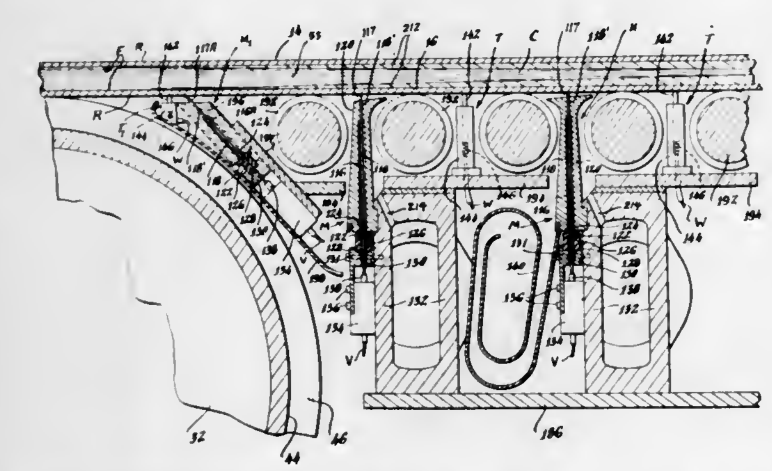

1. Belt-distortion sensing apparatus for use in twin-belt casting machines wherein the casting region is defined between opposed portions of a pair of revolving endless flexible casting belts and wherein molten metal to be cast is introduced into the casting region and is carried along between the front faces of the belts as it solidifies and in which liquid coolant is applied to the reverse surfaces of the casting belts along the casting region and is also removed from the reverse surfaces by coolant applicator and scoop units, said apparatus comprising:
coolant applicator and scoop units having holes formed therein to extend toward the reverse surfaces of the casting belts,
mechanical probes movably mounted in said holes having end portions projecting from said units adapted to engage the reverse surface of the nearby casting belt,
resilient means for urging the ends of said probes toward the reverse surface of the belt,
said probes being movable in response to distortion of the revolving casting belt, and
electro-mechanical transducer means associated with said mechanical probes for converting the movement of said probes into electrical signals as a function of the distortion of the casting belt.

4,062,236
METHOD OF AND MEANS FOR ACCURATELY MEASURING THE CALORIFIC VALUE OF COMBUSTIBLE GASES
William H. Clingman, Jr., Dallas, Tex., assignor to Precision Machine Products, Inc., Dallas, Tex.
Filed May 3, 1976, Ser. No. 682,578
Int. Cl.² G01N *25/30*
U.S. Cl. 73—190 CV **6 Claims**

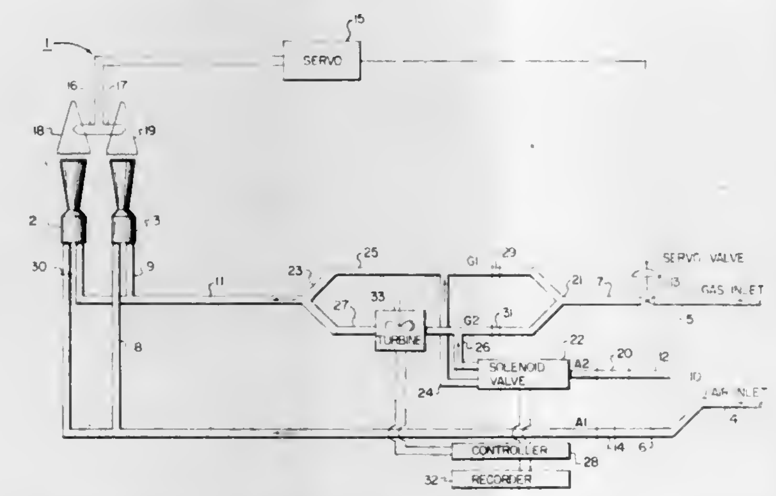

1. Apparatus for measuring the calorific value of combustible gases comprising:
a pair of burners;
a supply line for feeding a combustion-supporting gas to said burners;
a supply line for feeding a combustible gas to said burners;
a capillary section in one of said lines;
a turbine meter in the other of said lines;
means for sensing the temperatures of the burned gases;
means responsive to said sensing means for adjusting the gas flowing through the turbine meter to maximize the average of said temperatures;
means for measuring the revolutions per second of said turbine meter;
and control means for establishing and maintaining a constant volume flow rate in said first line comprising:
a control valve in said line upstream of said capillary section;
a first pressure sensor located at a selected point in said capillary section;
a second pressure sensor located in said first line downstream from said capillary section;
the dimensions of said capillary section and the location of said first pressure sensor being such that gas flow through at least that portion of the capillary section lying between the first pressure sensor and the downstream end of the section is laminar;
a signal processor;
means for inputting a constant signal of selected value to said processor;
a thermocouple exposed to ambient temperature;
said thermocouple being connected to said processor for delivering a signal thereto which is substantially proportional to the absolute ambient temperature;
said processor including means for multiplying said constant signal by the square root of said thermocouple signal to yield a product signal;
a comparator;
said pressure sensors being connected to said comparator for delivering pressure magnitude signals thereto and said processor being connected to said comparator for delivering said product signal thereto;
said comparator including means for taking the difference between said pressure magnitude signals, comparing said difference with said product signal, and sending a signal to said control valve to operate it in a direction to equalize said difference and said product signal.

4,062,237
CROSSED BEAM ULTRASONIC FLOWMETER
Martin D. Fox, 1 Storrs Height Road, Storrs, Conn. 06268
Filed May 7, 1976, Ser. No. 684,286
Int. Cl.² G01F *1/66*
U.S. Cl. 73—194 A **17 Claims**

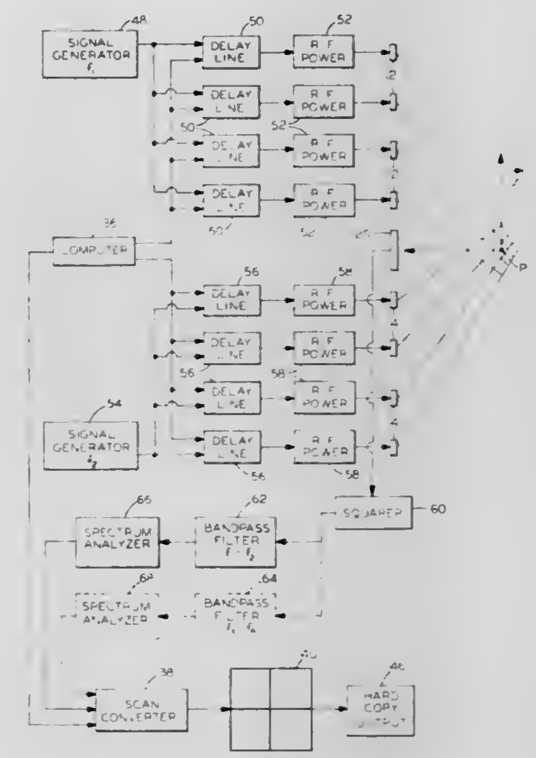

13. A crossed beam ultrasonic flowmeter comprising:
A. at least one pair of cooperating, spaced ultrasonic beam transmitting means, each of said ultrasonic beam transmitting means being comprised of a multiplicity of separate transducing elements arranged in a predetermined array;
B. signal generating means connected in circuit relation to said transmitting means for driving one transmitting means of the pair at a first ultrasonic frequency and the other transmitting means of the pair at a second ultrasonic frequency;
C. electronic focusing means connected to the several transducing elements of each of said transmitting means for focusing the beams of said transmitting means to intersect in a predetermined region through which dynamic particles undergoing velocity analysis are moving and to limit the ultrasonic volume in the predetermined region;
D. receiving means for receiving the ultrasonic signal scattered from dynamic particles undergoing velocity analysis;
E. filter means connected in circuit relation to said receiving means for separating the scattered ultrasonic signal received from said receiving means; and
F. spectrum analysis means connected in circuit relation to said filter means for analyzing said scattered ultrasonic signal.

4,062,238
MULTI-RANGE VORTEX-TYPE FLOWMETER
Peter J. Herzl, Morrisville, Pa., assignor to Fischer & Porter Company, Warminster, Pa.
Filed Feb. 14, 1977, Ser. No. 768,416
Int. Cl.² G01F *1/32*
U.S. Cl. 73—194 VS **5 Claims**

1. In combination with a flowmeter of the vortex type in which an obstacle mounted in a flow tube includes a block fixedly mounted across the tube at right angles to the direction of fluid flow, the front face of the block being presented to the incoming fluid, said block having a predetermined geometric configuration whose cross-sectional area is uniform through its longitudinal axis, a replaceable adapter cap fitting over the front face of the block, said cap having a longitudinal channel therein which conforms to the profile of the block and acts as a socket therefor, said cap having a formation effectively ex-

panding the cross-sectional area of the block without altering its geometric configuration whereby the resultant expanded block restricts the effective area in the flow tube of the fluid

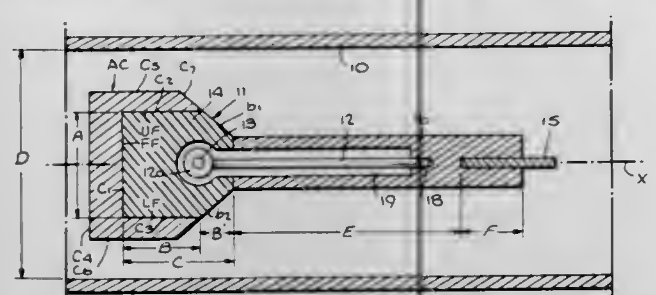

passing by the block, thereby making it possible to measure flow rates below the normal operating range of the meter in the absence of the cap.

4,062,239
METHOD AND APPARATUS FOR TEMPERATURE PROBE COVER WITH PROVISION FOR SANITARY DISPOSAL
Charles F. Fowler, 5157 Park West Ave., San Diego, Calif. 92117, and Samuel G. Dawson, 1155 Barrett Lake Road, Dulzura, Calif. 92017
Continuation of Ser. No. 488,705, July 15, 1974, abandoned. This application Mar. 4, 1976, Ser. No. 664,001
Int. Cl.² B65D *85/20*
U.S. Cl. 73—343 R **18 Claims**

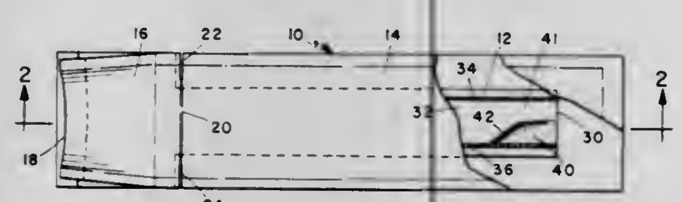

6. A probe cover for use on a preselected probe comprising:
a probe end contacting sheath formed of flexible sheet material and having a closed end and an openable end,
said probe end contacting sheath comprising an elongated tubular sheath portion having an inside diameter that is substantially greater than the outside diameter of the main body portion of said preselected probe,
siad probe end contacting sheath further comprising a reduced yieldable inside diameter probe end engagement section adjacent said closed end having portions of said sheet material yieldably bonded together for yieldably expanding to the diameter of said probe end for producing a cooperating engagement between said probe and said probe end engagement section,
means for grasping said probe end contacting sheath adjacent to the openable end thereof.

4,062,240
DOSING DEVICE FOR A LIQUID CHROMATOGRAPH
Gunter Richard Schaufele, Karlsruhe, Germany, assignor to Hewlett-Packard GmbH, Boblingen, Germany
Filed Dec. 20, 1976, Ser. No. 752,710
Claims priority, application Germany, Jan. 9, 1976, 2600622
Int. Cl.² G01N *1/00*
U.S. Cl. 73—422 GC **5 Claims**

1. Dosing apparatus for a liquid chromatograph comprising:
means defining a first sample receiving chamber and an adjacent second chamber connectable between the pump and column of a chromatograph flow system; and
sample transferring means disposed in communication with said first and second chambers, said transferring means including:
shank means formed to define a sample cavity therein, said shank means being axially movable between said first and second chambers to position said cavity in a selected one of said chambers; and

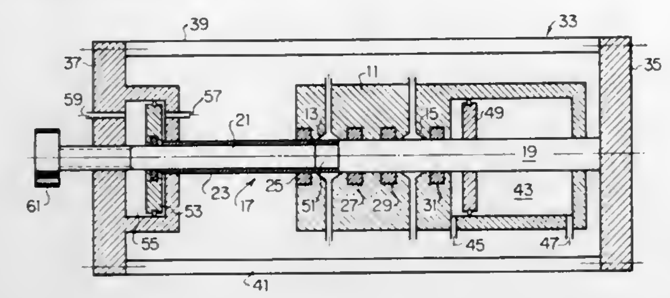

movable shutter means disposed on said shank for closing said cavity.

4,062,241
APPARATUS FOR INDICATING THE CHARACTERISTIC DATA OF A CENTRIFUGE
Gunter Eberle, Gartenstrasse 100, 7200 Tuttlingen, Germany
Filed Jan. 7, 1976, Ser. No. 647,340
Claims priority, application Germany, Jan. 7, 1975, 2500394
Int. Cl.² B04B *13/00*
U.S. Cl. 73—432 R **1 Claim**

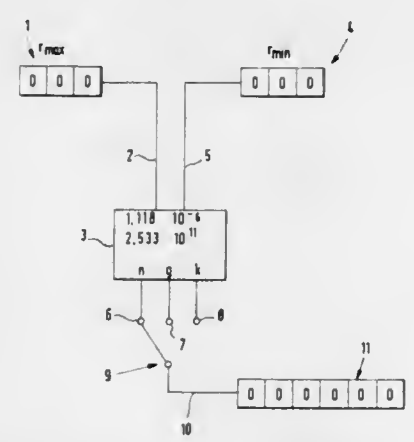

1. An apparatus for the digital indication of data measurements of a centrifuge centrifugal head for the examination of the contents of test vessels, specifically the number of revolutions per minute of the centrifugal head, the acceleration acting on the centrifugal material and/or the rotor characteristic data comprising a measuring device to measure the speed of the centrifuge motor, an imput for the maximum centrifugal radius and an imput for the minimum centrifugal radius of the centrifugal head, said inputs being connected to an electronic constructional element containing outputs for each of the number of rotations, the acceleration and the rotor characteristics data, each output connected by means of a selector switch to an indicator.

4,062,242
MACHINE FOR BALANCING VEHICLE WHEELS
Gerard Charles Camille Brihier, Arpajon, France, assignor to Facom, Morangis, France
Filed Sept. 28, 1976, Ser. No. 727,449
Claims priority, application France, Oct. 2, 1975, 75.30201
Int. Cl.² G01M *1/02*
U.S. Cl. 73—462 **15 Claims**

1. A machine for balancing vehicle wheels comprising a rotary shaft defining an axis of rotation and adapted to receive the wheel to be balanced, a motor connected to the shaft to drive the shaft and wheel to a predetermined speed, at least one measuring device responsive to imbalance of the wheel and furnishing a measurement signal as a function of the value of the imbalance, and means for determining the angular position of the imbalance, after stoppage of the wheel, by a new rotation of the wheel, said means for determining the angular position of the imbalance comprising an angular coding device comprising a rotary member coupled to said shaft for rotation

therewith, said rotary member having inscribed thereon a series of code numbes, each of which is inscribed respectively in a given radial position with respect to said axis of rotation so as to be representative of a corresponding angular position of the wheel, a stationary reader associated with said rotary member and so arranged as to be capable of reading successively each of said individual code numbers inscribed on said rotary member upon rotation of said wheel, at least one store connected to the reader, a measuring device for storing, in said store for a predetermined position of the imbalance, the value

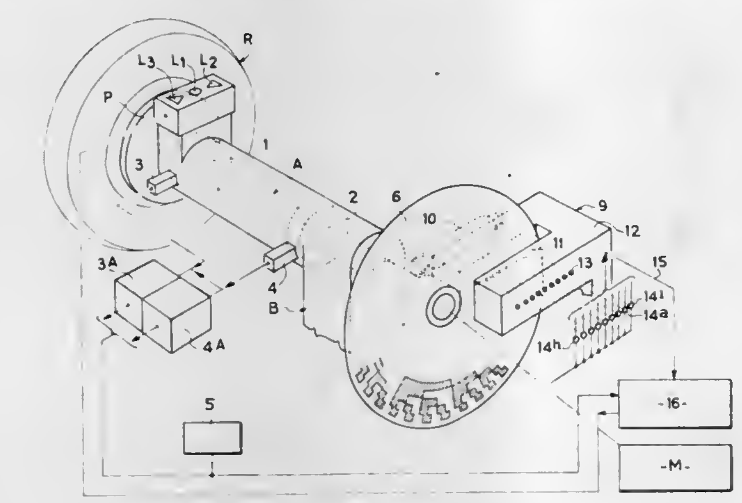

of the individual number which is presented in front of the reader at the moment when the imbalance passes through said predetermined position, and a storage authorizing circuit for authorizing said storage while said motor rotates at the desired measuring speed, there being also provided a calculating device for calculating the difference (γ) between the valve (β) furnished by the reader and corresponding to the instantaneous individual number read thereby, and the value (α) stored in the store, after stoppage of the wheel, and a circuit for utilizing said difference for indicating, after said new rotation, the position that the imbalance had at the moment of the storage.

4,062,243
TUNER PINION GEAR GUIDE
Alfred James Clark, Palatine, Ill., assignor to Motorola, Inc., Schaumburg, Ill.
Filed Oct. 4, 1976, Ser. No. 729,249
Int. Cl.² F16H *35/18*
U.S. Cl. 74—10.8 **7 Claims**

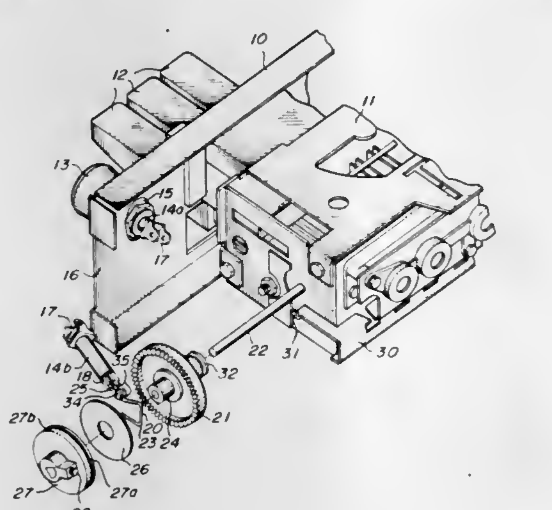

1. A radio tuner assembly having a support structure, tuning means mounted on the support structure for selecting a desired station, and tuning drive means adapted to position the tuning means by manual and by pushbutton means, the tuning drive means comprising:
first shaft means rotatably and slidably mounted on the support structure, said shaft having a first portion, a second portion and a pivot means intermediate said first and second portion for coupling said portions together and providing means for changing the angle of the axis of rotation of the first portion relative to the axis of rotation of the second portion;
manual control means fixedly mounted on the first portion of the first shaft means for causing rotation thereof;
first gear means fixedly mounted on the free end of the second portion of the first shaft means for rotation therewith;
second shaft means rotatably mounted on the tuner structure;
second gear means mounted on a portion of the second shaft means;
the first gear means being adapted to cause rotation of the second gear means;
guide means having a first end coupled to the second shaft means to permit rotational movement therebetween and having a second end adapted to engage the second portion of the first shaft means to permit rotational movement therebetween, said guide means for cooperating with the pivot means of the first shaft means to position the axis of the second gear means in radial alignment with the first gear means; and
variable means coupled to the first shaft means for accommodating variations in the lineal dimension measured along the first shaft means and the guide means to the axis of rotation of the second shaft means.

4,062,244
PUNCH DEVICE FOR CARD CODING ASSEMBLY
Yosei Kawabata, Suwa, Japan, assignor to Kabushiki Kaisha Suwa Seikosha, Tokyo, Japan
Filed Oct. 24, 1975, Ser. No. 625,629
Claims priority, application Japan, Nov. 5, 1974, 49-127336
Int. Cl.² F16H *25/08*
U.S. Cl. 74—54 **8 Claims**

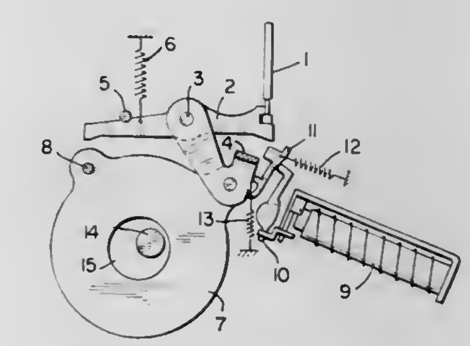

1. A punch device for coding cards, tapes and the like comprising a punch lever pivotably mounted to be coordinately pivotably displaceable between a first and second position, a punch member coupled to a first end of said punch lever to be displaced thereby, an oscillatable yoke, a hammer lever pivotably mounted to said yoke, said hammer lever being pivotably displaceable in the same pivotable orientation as said punch lever, drive means for oscillating said yoke and hammer lever mounted thereto, a trigger lever coordinately displaceable between a first position offset respectively and mechanically distinct from said hammer lever and said punch lever and a second position between said hammer lever and said punch lever for displacing said punch lever from said first position to said second position in response to said oscillation of said yoke, said punch lever and said hammer lever being pivotably displaced in the same pivotable direction when said trigger lever is disposed in said second position by the displacement of said punch lever from said first to said second position.

4,062,245
MOTION RESTRAINING DEVICE
James C. Fletcher, Administrator of the National Aeronautics and Space Administration, with respect to an invention of, and Allen G. Ford, Pasadena, Calif.
Filed Apr. 30, 1975, Ser. No. 572,990
Int. Cl.[2] **F16H** *21/40*
U.S. Cl. 74—81 **5 Claims**

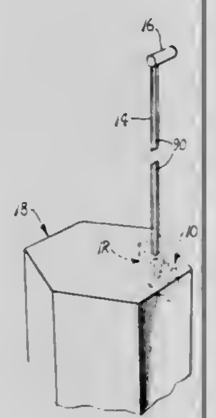

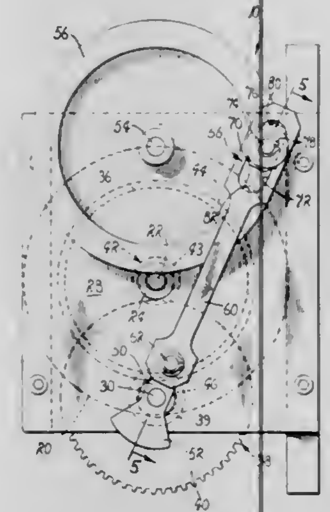

1. In a motion-restraining device for dissipating at a controlled rate the force of a body moving unidirectionally, the improvement comprising:
force dissipating means for dissipating rotary motion including:
A. a crankshaft adapted to be driven in unidirectional rotation and having an angularly related crank arm,
B. a mass supported for oscillatory motion about a fixed axis of rotation,
C. an elongated pitman link having one end pivotally connected to said crank arm, and
D. energy dissipating means interconnecting the opposite end of said link with said mass including means defining in said link an elongated slot, the opposite ends of which are defined by a pair of impact surfaces, a shuttle seated in said slot and supported thereby for rectilinear motion between said impact surfaces including a pair of opposite end surfaces of a truncated, curved configuration, the radii of curvature for said end surfaces being extended from points spaced at equidistances from the opposite end of the shuttle along an axis of symmetry therefor and the planes of truncation for said end surfaces being extended orthogonally with respect to said axis, and means for pivotally connecting said shuttle to said mass.

4,062,246
MECHANICAL MOVEMENT
Michael Lukawsky, 871 N. 22nd St., Philadelphia, Pa. 19130
Filed Jan. 26, 1977, Ser. No. 762,701
Int. Cl.[2] **F16H** *27/02*
U.S. Cl. 74—88 **6 Claims**

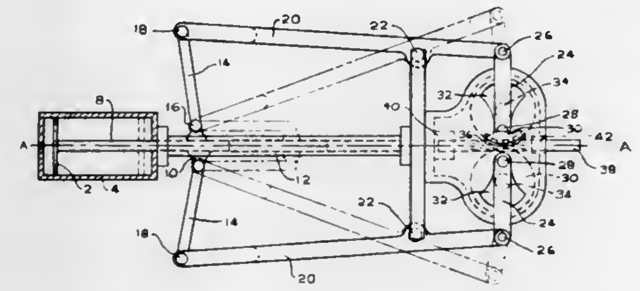

1. A mechanical movement, comprising
an input member movable in opposite directions along a given axis,
a lever pivotally movable about a fulcrum which is perpendicular to and spaced from said given axis,
means connecting said input member to a first point on said lever spaced a given distance from said fulcrum, to move said lever about said fulcrum and to move said first point relative to said given axis in response to movement of said input member,
a circular gear having peripheral teeth,
means mounting said gear for rotary movement about a gear axis which is substantially parallel to the axis of said fulcrum and is spaced from both the fulcrum and the given axis,
a crank pin on said gear spaced from the gear axis,
a connecting rod having one end pivotally engaging said crank pin,
means pivotally connecting said connecting rod to a second point on said lever, the distance between the first point and the fulcrum being greater than the distance between the second point and the fulcrum,
an output shaft lying parallel to said given axis and provided with external gear teeth which are in engagement with said teeth on said circular gear, whereby movement of said input member produces movement of said lever about said fulcrum to rotate said circular gear and rotate the output shaft.

4,062,247
TELESCOPING LINKAGE FOR HELICOPTER SIGHT
Ralph Auldon Brown, Bountiful, and Kenneth Harold Meinelt, Salt Lake City, both of Utah, assignors to Sperry Rand Corporation, New York, N.Y.
Filed July 28, 1976, Ser. No. 709,576
Int. Cl.[2] **F41G** *3/00*
U.S. Cl. 74—89 **3 Claims**

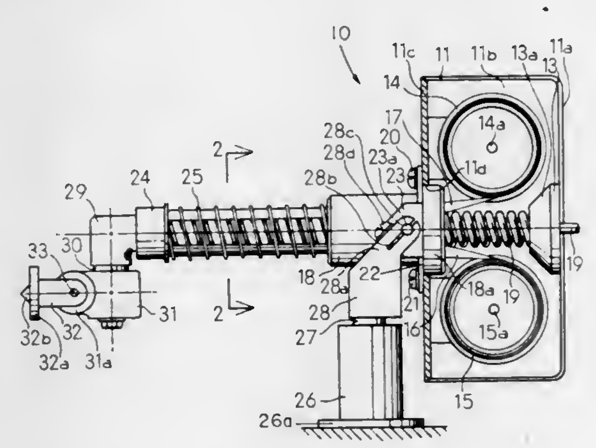

1. A linkage for interconnecting an object, such as a helmet, to a reference location to provide for longitudinal movement of said object toward and away from said reference location, comprising the combination of:

first means connectable to said object;
a plurality of metal tapes, one of the ends thereof being connected to said first means in a fixed spatial relationship;
second means mountable at said reference location and including a housing;
a plurality of reels;
means secured to said housing and rotatably mounting said reels;
said plurality of reels corresponding in number to said plurality of tapes, an opposite end of each of said tapes being connected to a respective one of said reels such that said tapes unwind from said reels when said first means is moved away from said second means and rewind on said reels when said first means is moved toward said second means;
said second means further including a hollow guide sleeve mounted to said housing and aligned with said reels so as to receive said tapes therethrough, said sleeve including internal spaced apart projections which respectively engage with the side edges of said tapes and maintain said tapes in said fixed spatial relationship as said tapes are moved through said sleeve during unwinding and rewinding thereof; and
said tapes being prestressed to assume curved cross-sectional configurations when unwound from said respective reels whereby unwound portions of said tapes, in being coextensively maintained in said fixed spatial relationship by said first means and said guide sleeve projections, form a substantially rigid tubular structure extending between said first and second means.

4,062,248
TWO-SPEED VIDEO RECORDER
Henry John Hattendorf, 262 Santa Paula, Grand Prairie, Tex. 75050
Continuation-in-part of Ser. No. 676,111, April 12, 1976. This application Sept. 30, 1976, Ser. No. 728,114
Int. Cl.[2] **F16H** *9/00, 15/00*
U.S. Cl. 74—217 R **15 Claims**

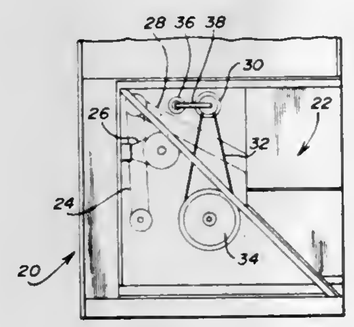

1. Apparatus for changing the recording speed of a video tape recorder having a drive pulley and a capstan pulley comprising:
first and second shafts;
said first shaft including first, second and third pulleys;
said second shaft including first, second and third pulleys; said first pulley of said first shaft having a larger diameter than said first pulley of said second shaft;
means for coupling said third pulleys to transfer rotational motion from one of said shafts to the other one of said shafts; and
means for interchangeably moving said first and second shafts between first and second positions to couple either said first pulley of said first shaft or said first pulley of said second shaft with the drive pulley while coupling either said second pulley of said first shaft or said second pulley of said second shaft with the capstan pulley in order to change the recording speed of the video tape recorder.

4,062,249
ARRANGEMENT FOR SENSING THE ROTARY MOVEMENT OF A ROTARY MEANS
Carl-Johan Paul Jarl, Allevillan, Svalsta gard, 150 21 Molnbo, Sweden
Filed July 28, 1976, Ser. No. 709,406
Int. Cl.[2] **F16H** *1/06;* **B05C** *1/00*
U.S. Cl. 74—414 **10 Claims**

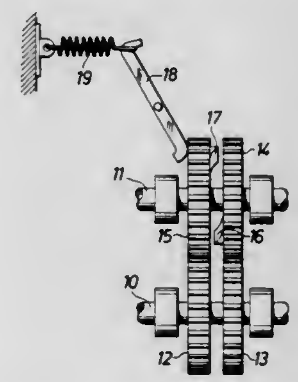

1. In an apparatus for sensing the rotary movement of a rotary means, said apparatus comprising a sensing member and actuation means arranged for subjecting the sensing member to a predetermined actuation when the rotary means has rotated a predetermined number of revolutions, the improvement wherein said actuation means comprises two rotary members mounted for rotation at mutually different speeds, directly proportional to the rotary speed of said rotary means and actuatable means operatively associated with said two rotary members and arranged to cause said predetermined actuation of the sensing member when the two rotary members reach a predetermined relative position.

4,062,250
GEAR TRAIN FOR INTERCONNECTING SIDE-BY-SIDE POSITIONED DRUMS, ROLLS, WHEELS, ETC.
Gerhard Lahl, Peine, Germany, assignor to ELMEG Elektro-Mechanik GmbH, Peine, Germany
Filed Sept. 16, 1976, Ser. No. 723,974
Claims priority, application Germany, Sept. 16, 1975, 2541181
Int. Cl.[2] **F16H** *1/06, 55/04, 27/04*
U.S. Cl. 74—415 **9 Claims**

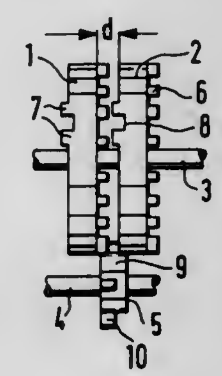

1. In a gear train which includes a first and a second roll arranged in coaxial, axially side-by-side relation to each other and which includes a transfer pinion by means of which the first and second rolls are coupled for transfer of rotation from the first roll to the second roll, the improvement comprising:
the first and the second rolls each having respectively first and second pins, the transfer pinion being disposed for meshing engagement with either and both of the first and second pins, so that the first roll is turned by the pinion in meshing engagement with the first pins when the pinion is rotated by the second roll also in meshing engagement with the second pins, the pinion not being journalled on any of said pins, the pins extending towards each other in a gap between the first and second rolls, in axially overlapping and radially clearing relation, without a mutual en-

gagement, for permitting independent rotation of the rolls except upon mutual coupling through the transfer pinion.

4,062,251
MOTION TRANSMITTING REMOTE CONTROL ASSEMBLY
William H. Parsons, Lansdale, Pa., assignor to Teleflex Incorporated, North Wales, Pa.
Filed Mar. 26, 1976, Ser. No. 670,749
Int. Cl.² F16C *1/10, 31/00*
U.S. Cl. 74—501 R **8 Claims**

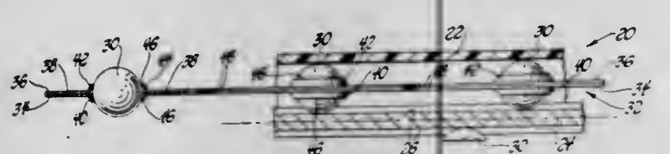

1. A motion transmitting remote control assembly of the type for transmitting motion in a curved path by a flexible motion transmitting core element and comprising: a conduit, a motion transmitting core element disposed within said conduit for longitudinal movement therein; a plurality of roller elements disposed within said conduit and engaging said core element for facilitating longitudinal movement of said core element relative to said conduit; and at least one retainer means interconnecting a plurality of said roller elements and including first and second coextensive abutting ribbon-like strips secured together and defining pocket portions in each strip which coact to define a pocket therebetween for each of said roller elements whereby one of said roller elements is rotatably retained in each of said retaining pockets, said strips being longitudinally flexible and including alignment means formed therein at longitudinally spaced positions along the strips.

4,062,252
ROTARY ASSEMBLY AND DRIVE THEREFOR
Martti Matikainen, Jyvaskyla, Finland, assignor to Valmet Oy, Finland
Filed June 13, 1975, Ser. No. 586,628
Claims priority, application Finland, June 19, 1974, 741886
Int. Cl.² F16H *1/28*
U.S. Cl. 74—801 **9 Claims**

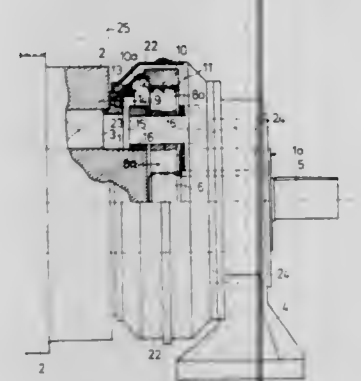

1. In a rotary assembly, an inner shaft having an end region, an outer cylinder coaxially surrounding and freely turnable with respect to said inner shaft, support means supporting said inner shaft at said end region thereof for angular deflection with respect to said cylinder when the latter is loaded sufficiently, a drive shaft coaxial with said inner shaft and outer cylinder, said drive shaft being freely rotatable with respect to said inner shaft, an inner gear fixed coaxially to said drive shaft for rotation therewith, an intermediate gear meshing with said inner gear, mounting means carried by said inner shaft and mounting said intermediate gear for rotary movement with respect to said inner shaft about an axis parallel thereto, and circumferential gear means coaxial with said inner shaft and outer cylinder and meshing with said intermediate gear so that rotation of said drive shaft is transmitted through said inner gear and intermediate gear to said circumferential gear means, said circumferential gear means being operatively connected with said outer cylinder for rotating the latter with respect to said inner shaft, whereby a drive from said drive shaft is transmitted to said outer cylinder through said inner gear, intermediate gear, and circumferential gear means, said circumferential gear means including at least two circumferential meshing transmissions for transmitting the drive from said intermediate gear to said outer cylinder, one of said circumferential meshing transmissions cooperating with said intermediate gear and the other being situated along a train of transmission between said intermediate gear and said outer cylinder, and said circumferential gear means including in said train of transmission an annular, rotary floating means for accommodating said circumferential gear means to any angular deflection between said inner shaft and said outer cylinder.

4,062,253
CHAIN SAW SHARPENER
John Lewis Dilworth, Santa Monica, Calif., assignor to McCulloch Corporation, Los Angeles, Calif.
Filed June 10, 1976, Ser. No. 694,578
Int. Cl.² B23D *63/16*
U.S. Cl. 76—25 A **15 Claims**

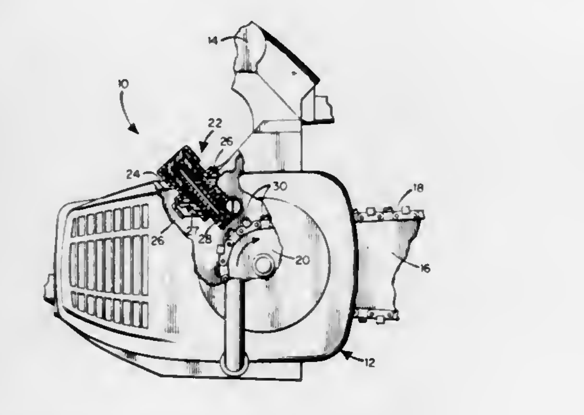

1. In a chain saw comprising
an engine shroud,
a drive sprocket within said engine shroud,
a cutting chain trained about said drive sprocket, and
a cutting chain sharpener assembly including
a grinding stone supported for movement between a first position in which said grinding stone is spaced apart from said cutting chain and a second position in which said grinding stone is located for contact with a cutting chain portion engaging said drive sprocket, and
biasing means for biasing said grinding stone toward said first position
the improvement wherein said chain sharpener assembly further comprises
a sharpener housing fixed with respect to said shroud and having a portion interior of said shroud and a portion exterior of said shroud,
an adjustable stop means for defining said second position of said grinding stone, and
detent means within said housing for maintaining said adjustable stop means in a selected position.

4,062,254
DEVICE FOR TIGHTENING, PRESTRESSING AND UNTIGHTENING A THREADED JOINT
Roland Fredriksson, Motala, Sweden, assignor to AB Motala Verkstad, Motala, Sweden
Filed Aug. 9, 1976, Ser. No. 712,773
Claims priority, application Sweden, Aug. 11, 1975, 7508991
Int. Cl.² B25B *29/02*
U.S. Cl. 81—57.38 **6 Claims**

1. A device for tightening, prestressing and untightening a threaded joint where great prestressing accuracy is required comprising, a body having an opening therein for receiving an

elongated internally threaded member forming part of said joint, pressure actuated piston means in said body adapted to impart axial movement thereto, and means having inclined

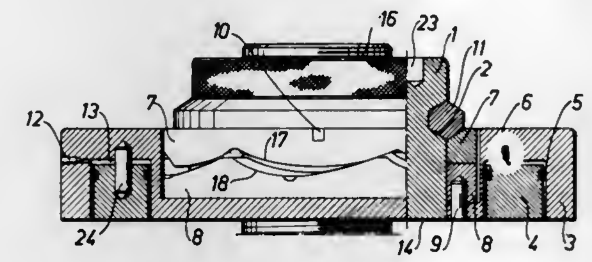

surfaces carried by said body for converting said body axial movement into rotational movement of an elongated threaded member received in said body for tightening or untightening the threaded joint.

4,062,255
CENTER TURNING TOOL
John J. Perotti, R.D. No. 1, Bluebell Road, Vineland, N.J. 08360, and George O. Pangburn, R.D. No. 2, Box 153A, Millville, N.J. 08332
Filed May 25, 1976, Ser. No. 689,865
Int. Cl.² B23B *49/04, 21/00*
U.S. Cl. 82—45 **4 Claims**

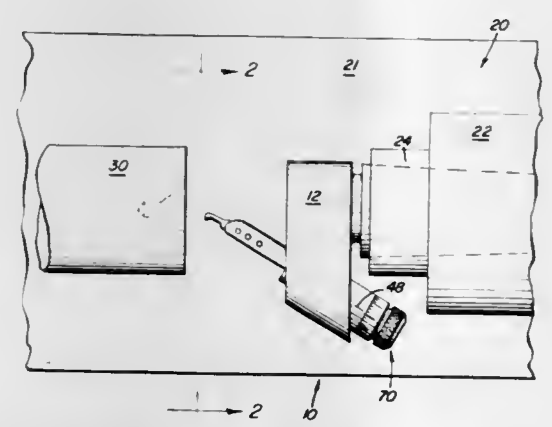

1. A center turning tool for use with a machinist lathe and the like comprising: means provided so that the tool can be used to recut and reform a damaged center of a workpiece held in the lathe without disturbing the compound tool rest of the lathe and the workpiece including; a main support structure fittable removably into the adjustable tailstock of the lathe, an adjustable tool holder mounted at a predetermined angle on the main support structure by means of an accurately drilled aperture in the main support structure, the adjustable tool holder being a close fit within said aperture, an elongated longitudinal keyway provided in the outer circumference of said tool holder, an adjusting screw mounted in the tool holder perpendicular to the aperture and the keyway of the tool holder and extending into said keyway to prevent rotation of the tool holder relative to said aperture in the main support structure, a workpiece center cutting tool held in said adjustable tool holder, and means for accurately adjusting the toolholder, the adjusting means including a stud having fine accurate threads provided thereon for engagement with complementary threads within an aperture provided in the adjustable tool holder.

4,062,256
CROSS SLIDE TURNING TOOL HOLDERS
William Eugene Newman, Sr., 3114 Harford Road, and Paul Donald Newman, 7 Nacelle Road, both of Baltimore, Md. 21218
Filed July 9, 1976, Ser. No. 703,832
Int. Cl.² B23B *5/38*
U.S. Cl. 82—17 **2 Claims**

1. A cross slide turning tool holder comprising: a body having a top and a bottom, the body structure defining an aperture therethrough from top to bottom, a mounting post through the aperture and terminating in a square lower end for mounting and a threaded upper end for tightening, the body comprising first and second members pivotally attached by the mounting post, the first member having an "L" shape with a horizontal leg and an upright leg, the horizontal leg of the "L" shape below the second member and the upright leg spaced from a first end of the second member, first and second screws threadedly engaging the second leg and extending against the first end of the second member for adjusting the angular position of the second member, the second member structure defining a groove in the top thereof and a dovetail way laterally

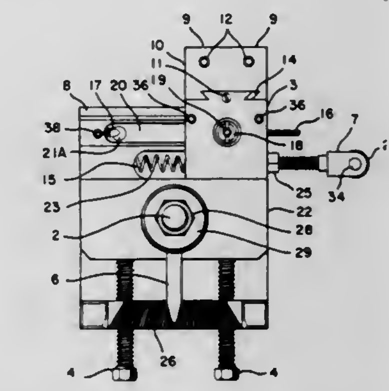

across a second end thereof, an adjustment block having complementary way structure slidably received on said dovetail way, a portion of the adjustment block extending downward into said groove, resilient means in the groove biasing laterally said portion of the adjustment block; a threadedly adjustable roller, for urging said adjustment block, on said portion of the adjustment block generally parallel with said resilient means, a solid stop adjustment screw on said adjustment block, the adjustment block having an upright dovetail structure, and a tool holding block with a complementary dovetail structure slidably engaging said dovetail structure, and means for vertically setting the position of said tool holding block.

4,062,257
INDEPENDENT, OFF-LINE DEVICE FOR THE CUTTING OF A ROLL OF PAPER INTO SHEETS
André Naert, Torhoutsteenweg 112, 8200 Brugge, Belgium
Filed Feb. 17, 1976, Ser. No. 658,606
Claims priority, application Belgium, Feb. 21, 1975, 284165; Feb. 4, 1976, 254804
Int. Cl.² B26D *1/56, 7/06*
U.S. Cl. 83—110 **3 Claims**

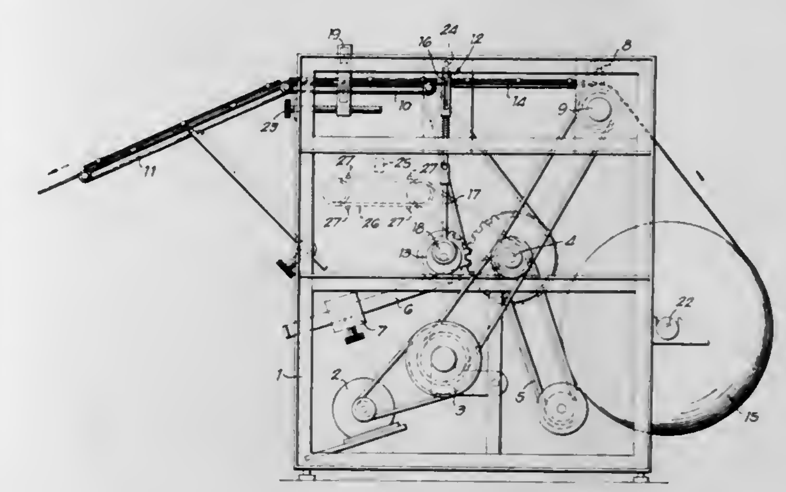

1. A device for cutting a roll of paper into sheets, comprising: an independent, self-contained, portable frame, suspension device on said frame for rotatably supporting a roll of paper, a motor mounted on said frame, an output shaft, an adjustable speed governor drivingly coupling said motor and output shaft, an unrolling means pivotably mounted on said frame for engaging the roll of paper and driven from said output shaft for

driving the roll in rotation, rotatable feed rollers on said frame driven by said output shaft for feeding the free end of the paper web from the roll, a first guide means on said frame for passage of the web thereon, a second guide means on said frame located downstream of the first guide means, a rotatable knife located between said first and second guide means for cutting said web, a plurality of different diameter sprockets each corresponding to a given length of cut sheets of paper, said sprockets being drivingly coupled to said rotatable knife, each for rotating the knife at at a speed according to the length to which the sheets of paper are to be cut, a chain driven from said output shaft and selectively led over one of said sprockets to drive the knife, and means for synchronizing the drive of the chain with the unrolling means.

4,062,258
FEEDSTOCK CUTTING AND FEEDING DEVICE FOR FORMING MACHINES
Yuan Ho Lee, 85, Jen Ho Road, Tainan, China /Taiwan
Continuation-in-part of Ser. No. 605,841, Aug. 18, 1975, Pat. No. 4,023,452. This application Jan. 17, 1977, Ser. No. 759,907
Int. Cl.[2] B26D *3/16, 7/06*
U.S. Cl. 83—161 **4 Claims**

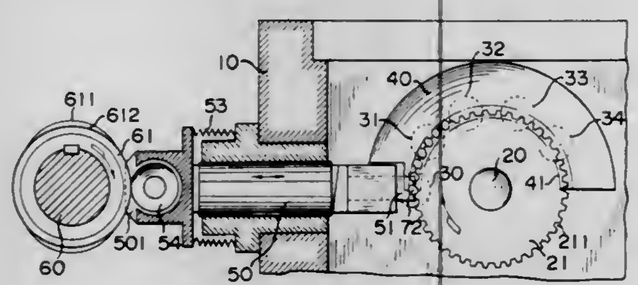

1. A high-speed feedstock cutting and forwarding device for use with a bolt nut forming machine comprising:
a cutter for cutting feedstock, said cutter having an aperture in the configuration of the external shape of the product to be formed for receiving and holding the feedstock;
means for driving said cutter in a reciprocal manner;
means for returning said cutter and resultant cut nut blank to the normal position of said cutter after the feedstock has been cut;
a transferring and conveying disc structurally adapted and provided at a suitable position in relationship to said cutter for receiving nut blanks cut thereby and for conveying cut nut blanks away from the cutter; and
driving means operatively connected to said disc to drive said disc in a rotary motion,
said device being characterized in that the cutter is driven through a moving distance by said cutter driving means only about one half of the distance through the feedstock to achieve cutting thereof, and said return means returns said cutter and resultant nut blank the same distance to a suitable position for introduction of the resultant nut blank to said disc.

4,062,259
HIGH CUTTING SPEED FLYING SHEAR MACHINE
Ferruccio Sclippa, Udine, Italy, assignor to Simac S.p.A., Tarcento (Udine), Italy
Filed Oct. 13, 1976, Ser. No. 732,148
Claims priority, application Italy, Oct. 13, 1975, 83457/75
Int. Cl.[2] B23D *25/12*
U.S. Cl. 83—285 **20 Claims**

1. A complex shear machine for automatic fly-cutting of an advancing bar by means of rotating knives, comprising:
a single frame;
two shear units;
a common drive means for driving both of said shear units; and
at least one deviator means for deviating the advancing bar alternately to each of said shear units,
wherein each said shear unit comprises -
a case;
two knife carrying axles supported by said case;
a rotating knife carried by each of said axles in such a manner to permit shearing contact with one another once during each revolution;
transmission means for transmitting the movement of one axle to the other axle;

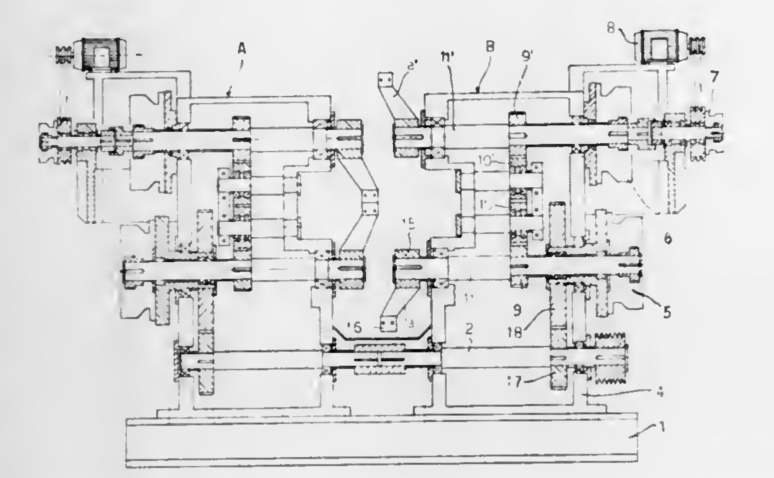

clutch means, connected to one of said axles, for permitting drive transmission from said drive means to said axles;
brake means connected to one of said axles for braking said axles; and
repositioning means for repositioning the rotational position of said axles, independent of said drive means,
whereby, when one said shear unit executes cutting, the other is repositioning the axles thereof to prepare for the successive cutting.

4,062,260
PRODUCE CUTTER
John Steinhogl, 5329 Ruby, Apt. E, Torrance, Calif. 90503
Filed Sept. 15, 1976, Ser. No. 723,234
Int. Cl.[2] B26D *7/06, 3/18*
U.S. Cl. 83—404.3 **6 Claims**

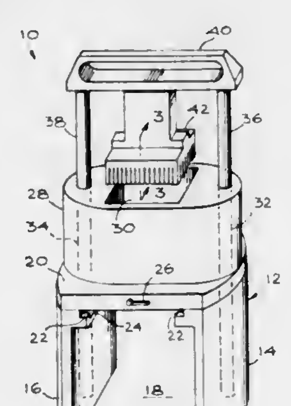

1. An improved produce cutter including, in combination:
a base portion having a produce-receiving chamber therein, said chamber having a first internal width dimension and a first internal length dimension;
a first knife rack supported in said base portion in alignment with said chamber and in communication therewith and having a second width dimension and a second length dimension, each at least equal to a respective one of said first dimensions, said first knife rack having a first plurality of mutually parallel knives each having thickness and all having their upper edges lying in a common first cutting plane, said knives being spaced by a third dimension;
a cutting die having a plurality of die elements, each of square cross section and spaced from the other by at least

said knife thickness, said elements being disposed symmetrically about a center line of said cutting die and each having a flat outer end which, in operation, is parallel to and facing said cutting plane, each such outer end having cross-sectional dimensions which are less than said third dimension;
said cutting die having overall transverse dimensions which are less than said first internal width and length dimensions and being supported slidably in said base portion with said die elements aligned with the spaces between said knives for movement of said die
elements into and out of said chamber in a direction normal to said cutting plane;
the lengths of said die elements increasing symmetrically over 360° and incrementally outwardly from said center line to the edges of said cutting die;
and cutting-die moving means coupled to said cutting die for imparting motion thereto.

4,062,261
KEY CUTTING APPARATUS
Allen Andrew Stahl, Gaithersburg, Md., assignor to Alvin M. Chanin, Philadelphia, Pa.; Robert Chanin, Denwood, Md. and Robert J. Mooney, Warminster, Pa., a part interest
Filed Oct. 14, 1976, Ser. No. 732,403
Int. Cl.[2] B26D *7/06*
U.S. Cl. 83—414 **9 Claims**

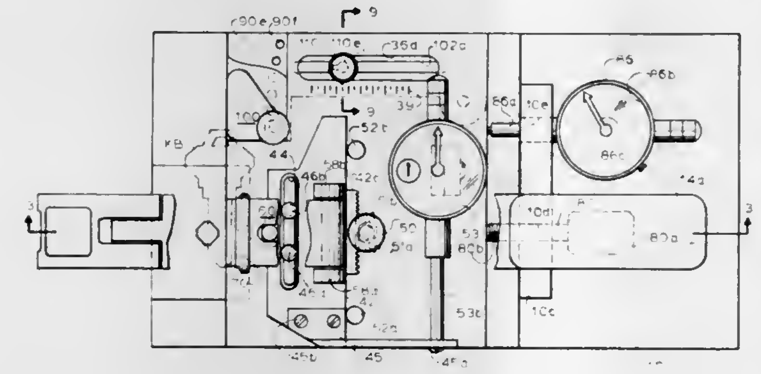

1. Key blank cutting apparatus, for cutting longitudinally spaced notches in the blade of a key blank, comprising:
a base;
a cutter secured to said base;
a carriage assembly including a longitudinal carriage and a lateral carriage;
said lateral carriage movably mounted on said base for motion toward and away from said cutter;
said longitudinal carriage carried by and movably mounted on said lateral carriage for independent longitudinal motion with respect to said cutter and with respect to said lateral carriage motion;
positioning means movably mounted on said longitudinal carriage, for longitudinally positioning said key blank with respect to the cutter to juxtapose with the cutter that portion of the key blank blade where the first notch is to be cut;
means connected to said positioning means for clamping said key blank to said longitudinal carriage and for immobilizing said positioning means;
means secured to the base for moving said carriage assembly toward and away from said cutter; and
means operatively connected to the lateral carriage for moving said longitudinal carriage longitudinally with respect to said cutter in predetermined equal linear increments.

4,062,262
SLICING MACHINES
John Anthony Odell, London, England, assignor to Lemonaid Limited, Hennslow, England
Filed Aug. 23, 1976, Ser. No. 717,013
Claims priority, application United Kingdom, Sept. 23, 1975, 38925/75
Int. Cl.[2] B26D *4/22, 7/06*
U.S. Cl. 83—717 **8 Claims**

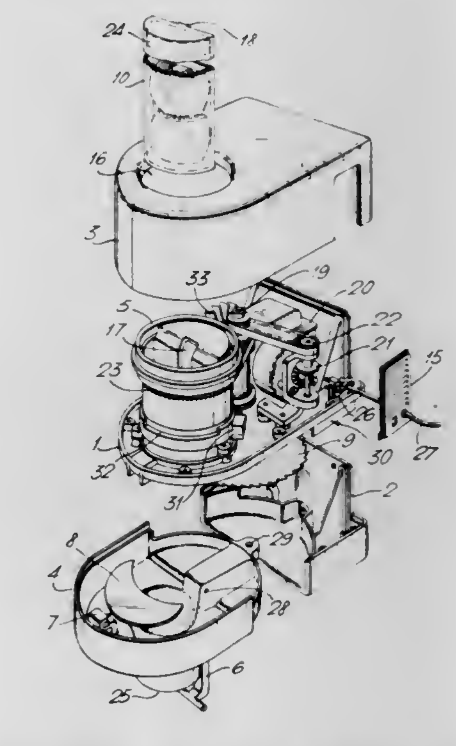

1. A slicing machine comprising a housing containing a rotatable cassette holder, a vertically extending cassette fitting into said cassette holder and which is open at its bottom end and is designed to hold objects to be sliced, a horizontal cutting blade, drive means for rotating the cassette holder about a vertical axis so as to sweep the cassette through a circular path and carry any object projecting proud of the bottom end of the cassette past the cutting blade and return the cassette to its original position, and coupling means between said drive meāns and said cassette holder positioned so as to provide an unobstructed space beneath the cassette holder for any slice cut by the blade, and said housing having an opening positioned beneath the blade for allowing such slice to fall out.

4,062,263
AUTOMATIC RHYTHM PERFORMING APPARATUS
Eiichi Yamaga, and Eiichiro Aoki, both of Hamamatsu, Japan, assignors to Nippon Gakki Seizo Kabushiki Kaisha, Shizuoka, Japan
Filed Sept. 21, 1976, Ser. No. 725,198
Claims priority, application Japan, Sept. 25, 1975, 50-114851
Int. Cl.[2] G10F *1/00*
U.S. Cl. 84—1.03 **15 Claims**

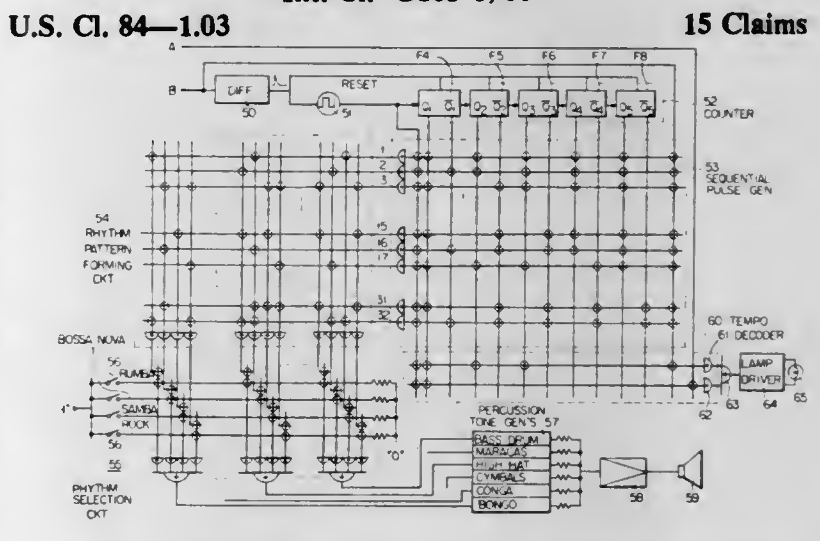

1. An automatic rhythm performing apparatus comprising: memory means having inputs and outputs and holding at the

outputs thereof a state of output signals which corresponds to a state of input signals at the inputs thereof, said memory assuming a plurality of output states according to a plurality of input states;

automatic rhythm generating circuit means coupled to the outputs of said memory means for starting or stopping a rhythm performance in response to preselected output state of said memory means;

rhythm performance control signal providing means having a plurality of rhythm performance control switches and outputs, and providing a plurality of rhythm performance control signals to the outputs thereof, a state of rhythm performance control signals at the outputs of said rhythm performance control signal providing means being variable by operation of said rhythm performance control switches; and

logic means having inputs coupled to the outputs of said rhythm performance control signal providing means and to the outputs of said memory means, and having outputs coupled to the inputs of said memory means for setting said memory means from an output state to another output state in response to a variation in a state of control signals at the outputs of said rhythm performance control signal providing means.

4,062,264

POLYPHONIC MUSICAL INSTRUMENT SIMULATOR

Willis E. Chase, P.O. Box 4042, Lancaster, Calif. 93534

Filed Feb. 7, 1975, Ser. No. 547,873

The portion of the term of this patent subsequent to Dec. 24, 1991, has been disclaimed.

Int. Cl.² G10H *1/02*

U.S. Cl. 84—1.24 **13 Claims**

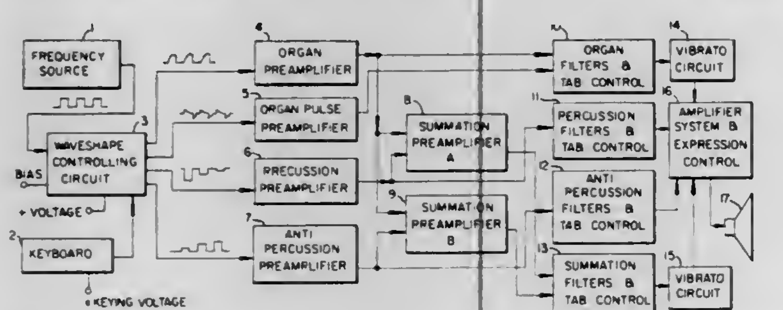

1. An electronic musical instrument for obtaining certain musical effects comprising in combination:

a plurality of frequency sources supplying rectangular waves continuously at a given rate, each of which corresponds to a semitone of the musical scale;

a plurality of key switching means;

a plurality of waveshape controlling means, each of which is connected to a corresponding one of said frequency sources, and each of which has a minimum of two outputs;

a first of said outputs producing a waveshape having a plurality of selected harmonics and rendered operative by one of said plurality of key switching means and;

a second of said outputs producing a waveshape having a plurality of selected harmonics and rendered operative by the same said one of said keyswitches but the amplitude of said waveshape being controlled by said waveshape controlling means while said keyswitch is rendering it operative for the purpose of obtaining certain musical effects;

filter means responsive to each output for adjusting the amplitudes of said harmonics to conform to the desired timber of said organ tone, and also of said musical effects and;

signal translating means responsive to the output of each filter means to produce audible musical tones.

4,062,265

STRING INSTRUMENT TUNING SYSTEM

William C. Walker, 7854 I Bruton Court, Glen Burnie, Md. 21016

Filed Jan. 9, 1976, Ser. No. 647,979

Int. Cl.² G10D *3/14*

U.S. Cl. 84—312 R **8 Claims**

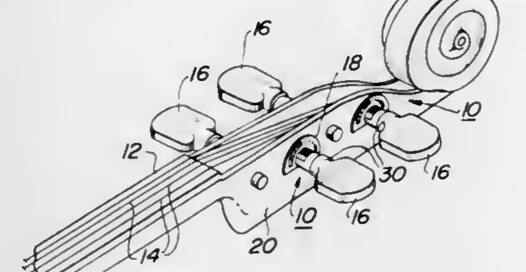

4. A tuning system for a musical instrument having strings, a peg box, and tuning pegs mounted on said box for varying the tension in said strings, comprising:

a first decalcomania adapted to be adhesively secured to said box substantially adjacent one of said pegs, said decalcomania having indicia zones printed thereon; and

a second decalcomania adapted to, be adhesively secured to the neck of said one peg adjacent to said first decalcomania, said second decalcomania having an index thereon registrable with said indicia zones to indicate the rotative position of said peg relative to said tuning head and thereby indicate the relative tension in the string attached to said peg.

4,062,266

LIQUID PROPELLANT MODULAR GUN INCORPORATING DUAL CAM OPERATION AND INTERNAL WATER COOLING

Lester C. Elmore, 125 Bear Gulch Drive, Portola Valley, Calif. 96122; Thomas M. Broxholm, deceased, late of Palo, Calif., by Anne K. Broxholm, administratrix, 4194 Oak Hill Drive, Palo Alto, Calif. 94306

Filed Sept. 25, 1975, Ser. No. 616,822

Int. Cl.² F41F *1/04*

U.S. Cl. 89—7 **43 Claims**

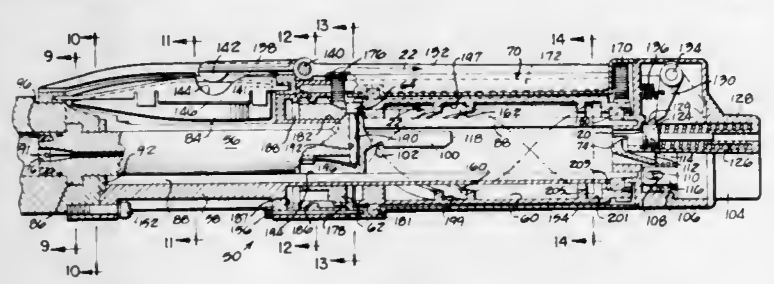

1. A gun of the kind in which liquid propellant is burned in a combustion chamber to fire a projectile from the gun and comprising,

a gun barrel,

a combustion chamber,

a bolt mounted for axial movement between a rearward, projectile loading position and a forward, projectile firing position,

liquid propellant injection means for injecting a liquid propellant into the combustion chamber,

igniter means for igniting the liquid propellant in the combustion chamber,

drive cam means for moving the bolt back and forth between the rearward and forward positions,

drive means for driving the drive cam means, and

control means for controlling the liquid propellant injection means and igniter means in coordination with the drive of the drive cam means.

4,062,267

APPARATUS FOR CONDUCTING FIRING

René Vinches, L'Isle Adam, and Jacques Moirez, Paris, both of France, assignors to Societe d'Optique, Precision, Electronique et Mecanique Sopelem, Paris, France

Filed Nov. 10, 1976, Ser. No. 742,135

Claims priority, application France, Nov. 14, 1975, 75.34881; Nov. 4, 1976, 76.33317

Int. Cl.² F41G *3/06*

U.S. Cl. 89—41 E **16 Claims**

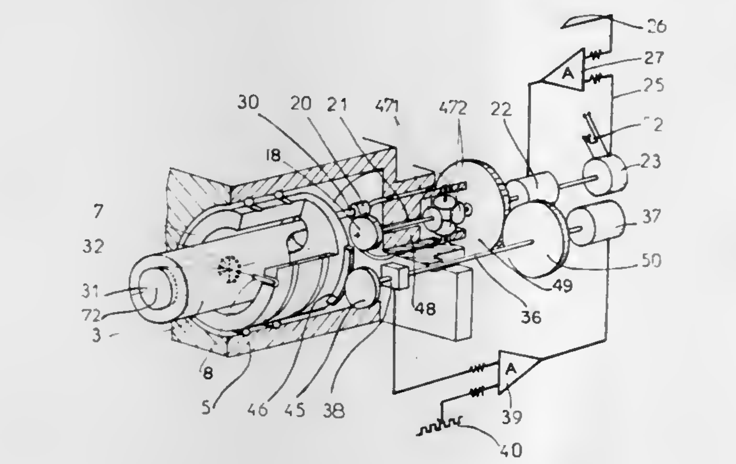

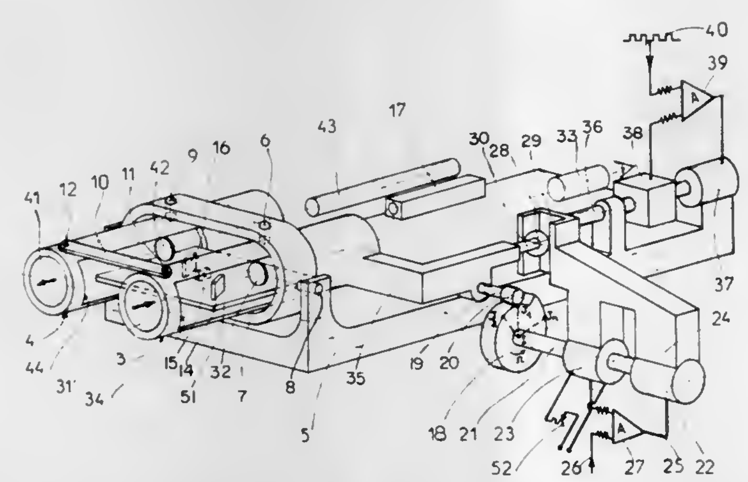

1. In an apparatus for conducting firing adapted to the aiming of a cannon movable in bearing and in elevation around a turning axis as a function of the aim values given from a table of firing corresponding to the cannon and of other parameters of firing and comprising an observation scope with an optical deflector element serving for the displacement of the line of sight, support means mounting said optical deflector and connected in bearing and in elevation with the cannon, cam means for moving said support means including a movable cam having a profile determined by the aim values from the table of firing, motor means for driving the cam, rangefinder means operatingly coupled to the motor means, said rangefinder means having transmission and receiving beams connected in bearing and in elevation to the axis of the observation scope, the improvement wherein said support means comprises a spherical articulation assembly pivotably supporting said optical deflection element for spherical movement and vertical detector means coupled to said optical deflector element for maintaining the axis of sight in a substantially vertical plane passing through the direction of the target.

4,062,268

FLUID OPERABLE HAMMER

George A. Hibbard, Claremont, N.H., assignor to Joy Manufacturing Company, Pittsburgh, Pa.

Continuation of Ser. No. 478,289, June 11, 1974, abandoned. This application Nov. 28, 1975, Ser. No. 635,936

Int. Cl.² F01L *25/06*

U.S. Cl. 91—165 **7 Claims**

1. In a fluid operable hammer assembly, the improvement comprising: a body member having an elongated bore therein, a piston reciprocably movable within said bore in oppositely directed axial strokes to form two axially spaced variable volume chambers therein, said body member having a gas accumulator in continuous gas flow communication with one of said variable volume chambers to form therewith a sealed gas system with said piston being move periodically through one of said strokes by expansion of gas within said gas system, said body member having a hydraulic fluid chamber, said body member having means to selectively control the supply of a hydraulic fluid to the other of said variable volume chambers

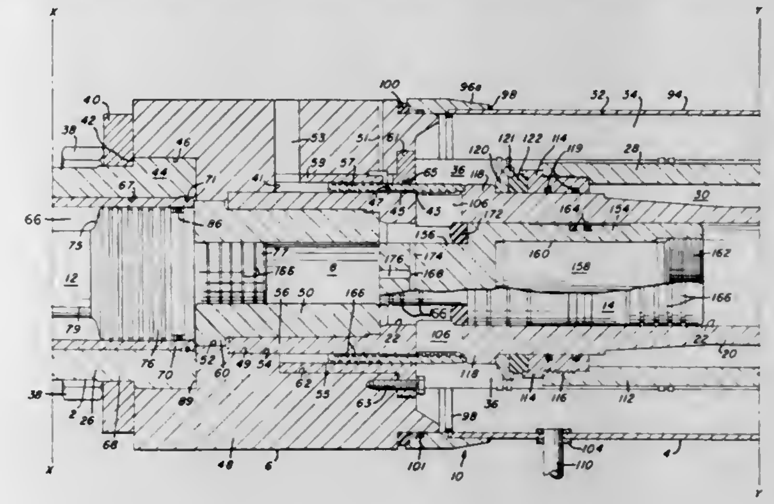

to move said piston periodically through the other of said strokes upon completion of said one strokes and to selectively place said hydraulic fluid chamber in fluid flow communication with said other of said variable volume chambers to receive hydraulic fluid discharged from said other of said variable volume chambers when said piston is movable through each of said one stroke, said gas accumulator substantially encompassing the axial extent of said one of said variable volume chambers, and said hydraulic fluid chamber encompassing the axial extent of said gas accumulator.

4,062,269

HYDRAULIC CYLINDER EXTENSION CONTROL

Willard L. Chichester, and Donald A. Holtkamp, both of Battle Creek, Mich., assignors to Clark Equipment Company, Buchanan, Mich.

Filed Apr. 21, 1975, Ser. No. 570,283

Int. Cl.² F15B *15/22*

U.S. Cl. 91—400 **13 Claims**

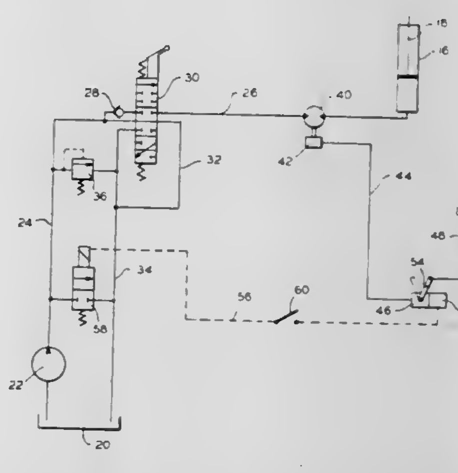

10. A control system for an extensible hydraulic cylinder means having hydraulic pump and valve means for actuating and controlling the extension of the cylinder means, comprising means operative to pre-select and control automatically the distance of extension of the cylinder means including means for measuring the hydraulic fluid volume flowing to the cylinder means during extension thereof, operator control means for selecting the desired extension of the cylinder means, means operative to interrupt the flow of hydraulic fluid to the cylin-

der means at said desired extension irrespective of cylinder pressure, and circuit means operatively connected to said operator control means, to said fluid volume measuring means and to said interrupter means.

4,062,270
PANEL INTERLOCKING MECHANISM FOR WRAPPER TYPE CARTONS
Will Lester Culpepper, Tucker, Ga., assignor to The Mead Corporation, Dayton, Ohio
Filed Jan. 14, 1977, Ser. No. 759,540
Int. Cl.² B31B *1/60*
U.S. Cl. 93—1.1 **8 Claims**

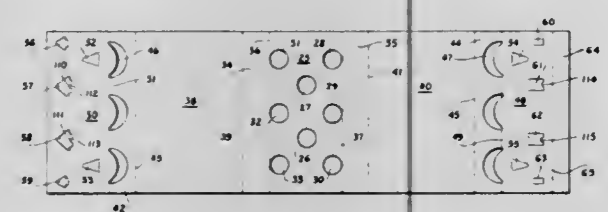

7. A method of interlocking a pair of panels one panel having a shouldered locking tab formed therein and having a securing aperture at the base of said locking tab, the other panel having a locking aperture formed therein from an edge of which a securing tab projects, the method comprising initially arranging the panels in flat face contacting relation and with said locking tab in coincidence with said locking aperture and with said securing tab in coincidence with said securing aperture, engaging and driving said locking tab through said locking aperture and into a position of angular relation to said one panel and thereby substantially simultaneously causing said securing aperture to receive said securing tab.

4,062,271
APPARATUS FOR STACKING BAGS
Georges Lagain, 65, rue du Moulin de Cage, 92230 Gennevilliers, France
Filed Dec. 7, 1976, Ser. No. 748,193
Claims priority, application France, Dec. 12, 1975, 75.38195
Int. Cl.² B31B *1/64*
U.S. Cl. 93—33 H **3 Claims**

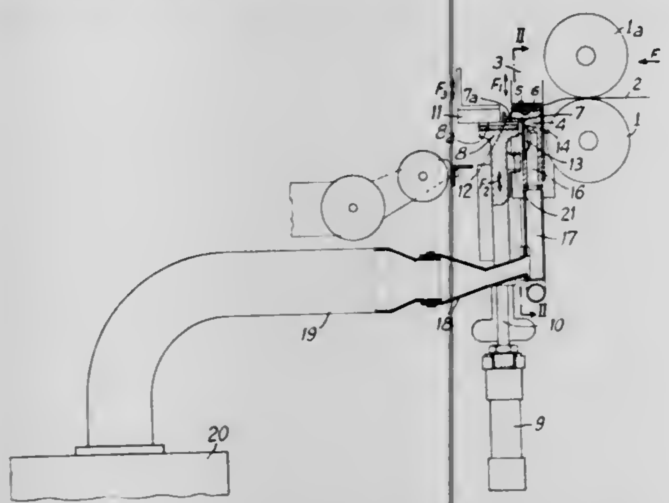

1. In an apparatus for stacking plastic bags disposed at the outlet of a machine for manufacturing bags including two sealing jaws with at least one of said jaws being mobile; at least one of said jaws having an edge attached thereto and extending downstream therefrom, for a support member having a support face abutting against said edge for supporting a stack of said bags and clamping one of the ends of the bags after they have been cut, a heating resistance disposed on said jaw edge to heat seal said stack to form a packet of said bags, a retaining member disposed downstream of said jaws and movable parallel thereto in cooperation with said support member the improvement comprising providing a fluid suction means in the lower part of the sealing jaw over at least a part of the length of said jaw, said suction means located beneath said support edge and opposite said support member.

4,062,272
STATIONARY VENT APPARATUS
Raymond A. McCarroll, 1725 Newcastle, Grosse Pointe Woods, Mich. 48236
Filed Sept. 2, 1976, Ser. No. 719,940
Int. Cl.² B60J *1/20*
U.S. Cl. 98—2.12 **5 Claims**

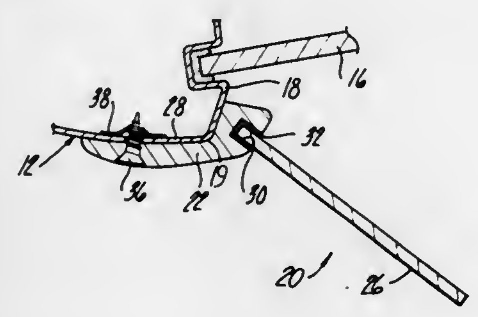

1. In an automobile having a door with a window opening and a door glass for closing said opening, the forward edge of the opening having a convex configuration facing laterally outward on the outer side surface of the door, vent apparatus mounted on the outer convex surface of the forward edge of the opening comprising upper and lower mounting brackets vertically spaced from one another and having inner mating surfaces conforming to said convex surface of said forward edge and channels in the outer surfaces extending in generally vertical alignment, each mounting bracket being a rigid one-piece member, a transparent plate mounted in a permanently fixed position in said channels at a fixed acute angle to said door glass, and separate attachment means securing each bracket to said convex surface of the edge of the window opening.

4,062,273
VENTILATION SYSTEM FOR A PASSENGER VEHICLE
Jon Francis O'Connor, Chicago, Ill., assignor to Vapor Corporation, Chicago, Ill.
Filed Jan. 8, 1976, Ser. No. 647,372
Int. Cl.² F24F *5/00;* B60H *1/00*
U.S. Cl. 98—8 **9 Claims**

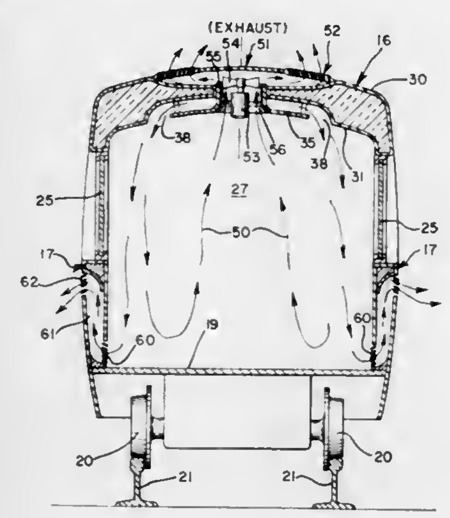

1. A ventilating system for a passenger carrying vehicle having a passenger compartment defined by side and end walls, a ceiling and roof thereover, and a floor, a plurality of generally equally spaced doors along each of the side walls, and a plurality of generally equally spaced window units along the side walls wherein a window unit is arranged between adjacent doors, said system comprising a plenum chamber mounted along the ceiling, a plurality of air intake fan assemblies mounted in the ceiling and equally spaced apart for pumping air from the atmosphere into the plenum chamber, said chamber having air diffuser outlets in the ceiling along opposite sides to distribute an air flow along substantially the entire length of the side walls, and a plurality of exhaust fan assemblies mounted along the ceiling intermediate adjacent intake fan assemblies and equally spaced apart for exhausting air from the passenger compartment, said exhaust fan assemblies including air passage means extending through and isolated from said plenum chamber whereby air drawn through the exhaust fan assemblies will not mix with air in the plenum chamber.

4,062,274
EXHAUST SYSTEM FOR BONE CEMENT
James V. Knab, 2916 Hall St. SE., Grand Rapids, Mich. 49506
Filed June 7, 1976, Ser. No. 693,193
Int. Cl.² F23J *11/00*
U.S. Cl. 98—115 R **6 Claims**

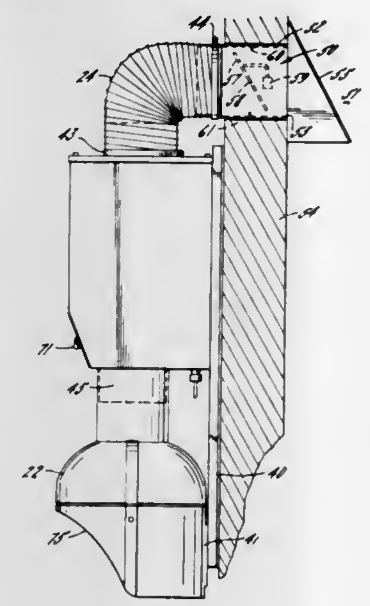

1. An exhaust system for evacuating toxic fumes produced when mixing bone cement from an operating room to an external atmosphere comprising in combination, a vacuum plenum, an exhaust hood affixed to the vacuum plenum and defining a mixing zone, said hood having an aperture at a lower front portion thereof for allowing access to said mixing zone for mixing of bone cement directly under said hood, an exhaust conduit connecting the vacuum plenum to the external atmosphere, fan means within the plenum for drawing air and fumes emanated during mixing of said cement through the hood into the plenum and directing it out of the exhaust conduit and into the external atmosphere, said fan means being operable to direct an air flow through said system of more than 350 cubic feet per minute but less than an amount that would create a negative pressure in the operating room for drawing substantially all of the toxic fumes generated during mixing of said bone cement into said hood and plenum and diluting said fumes in said air flow such that the effluent exhausted into the external atmosphere has less than about one part by million toxicity, and timer means for establishing an interval of operation of said fan means to automatically limit the amount of air exhausted by the vacuum system.

4,062,275
GRILL APPLIANCE
Wolfgang Appel, Munich; Otto Bjarsch, Traunreut, and Horst Heimdorfer, Traunreut, all of Germany, assignors to Bosch-Siemens Hausgerate GmbH, Munich, Germany
Filed Nov. 17, 1975, Ser. No. 632,693
Claims priority, application Germany, Nov. 21, 1974, 2455190
Int. Cl.² A47J *37/04*
U.S. Cl. 99—393 **10 Claims**

1. A grill appliance comprising a vertical central column grill heater for grilling an article, disposed adjacent the upper end of said vertical central column with said heater extending horizontally about said central column, a cover above said grill heater, a base at the lower end of said vertical central column and extending horizontally about said central column for standing said grill appliance on a support surface, a grill carrier for the article to be grilled extending horizontally about said central column and disposed between said grill heater and said base with said central column extending through said grill carrier, and a support element for said grill carrier for the

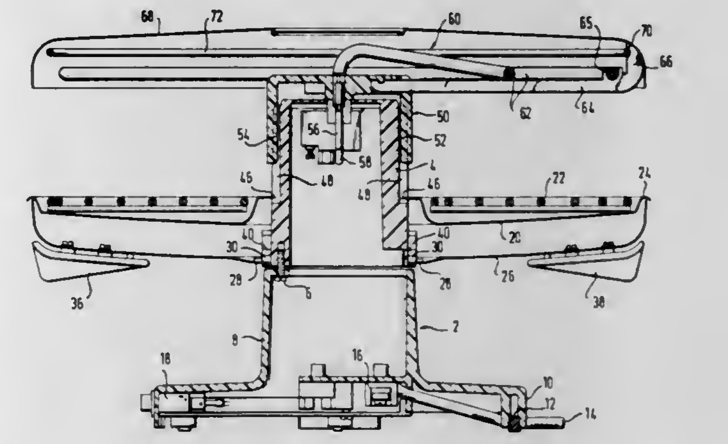

articles to be grilled, surrounding and supported by said cenrral column, thereby permitting ready access from all sides to the article to be grilled on said grill carrier, therebeing inclined surfaces formed on the central column wherein said support element can be rotated about said column on said surfaces to permit adjustment in height of said grill carrier for the articles to be grilled relative to said grill heater.

4,062,276
COAGULATION OF PROTEIN FROM THE JUICES OF GREEN PLANTS BY FERMENTATION AND THE PRESERVATION THEREOF
Mark A. Stahmann, 939 University Bay Drive, Madison, Wis. 53705
Division of Ser. No. 543,468, Feb. 23, 1975, Pat. No. 3,975,546. This application Mar. 19, 1976, Ser. No. 668,410
Int. Cl.² A01J *11/04;* A23B *5/00;* A23P *1/00;* C12K *1/10*
U.S. Cl. 99—467 **6 Claims**

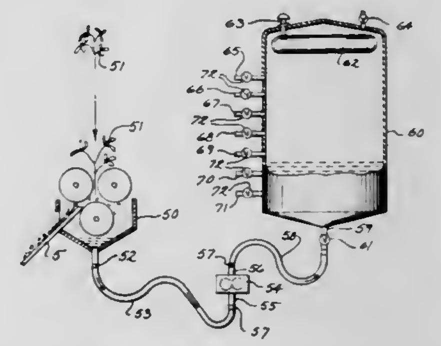

1. Apparatus for the extraction of juices from green plants and coagulating and preserving proteins in the juices, which comprises extractor means for receiving the green plants and expressing the juice therefrom, a substantially oxygen free anaerobic fermentation and preservation tank located adjacent the extractor means, a first conduit adapted to connect the extractor means with said tank and conduct the expressed green plant juices to said tank from the extractor means, said tank serving as a holding tank for storing the juices for a predetermined length of time so that the juices have an opportunity to ferment therein in an anaerobic atmosphere by utilizing the microorganisms carried into the juices from the leaves of the green plants on which said microorganisms are naturally resident to thereby lower the pH of the juices and form liquid silage containing a protein coagulum free to be separated from the liquid supplied from the juices and be deposited in the bottom of the tank, breather means connected to the tank and adapted to compensate for differential in pressures between the gases inside of the tank and the outside atmosphere to prevent the entry of air into the tank to maintain an oxygen free anaero-

bic atmosphere inside the tank, a second conduit adapted to be connected to the bottom portion of the tank to unload the protein coagulant from the bottom of the tank for use as a feed supplement, a plurality of conduit connections secured to the tank at different levels and selectively adapted to be connected to a third conduit to unload the liquid which collects in the tank above the protein coagulum to thereafter be used as a fertilizer or concentr ated to a feed supplement, pump means adapted to be connected to each of the respective conduits to increase the flow of material therethrough, and valves disposed in each conduit to control the flow of material therethrough.

4,062,277

DEFROSTING APPARATUS

Gilbert L. Powers, South Pasadena, Calif., assignor to W. B. Van Nest Company, Excelsior, Minn.
Continuation of Ser. No. 441,663, Feb. 11, 1974, abandoned. This application Sept. 22, 1975, Ser. No. 616,033
Int. Cl.² A23C *3/02, 9/02;* **A23B** *4/08;* **B05B** *15/00*
U.S. Cl. 99—483 **8 Claims**

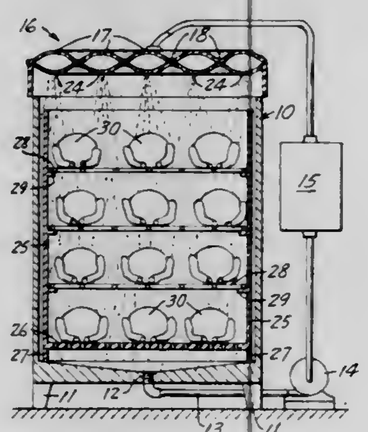

1. A system for thawing of frozen food products comprising:
a. a tank for holding the products to be thawed, the sidewalls and base of said tank joined to define a closed container except for an open top and including drain means joined thereto adjacent the lower portion of said tank;
b. a readily removable cover member of flexible plastic material providing a complete closure for the top of said tank to seal the contents from contamination, said cover member having upper and lower sheet members joined adjacent the peripheral edges to define a closed liquid receiving chamber, an inlet opening in said chamber for introducing thawing liquid into said chamber, the lower sheet member of said cover member which faces inwardly into said tank defining a plurality of small openings in fluid communication with said chamber, said openings being spaced from one another so as to provide a spray of thawing liquid over the product to be thawed, said cover member being collapsible and foldable when not in use so as to be conveniently storable;
c. fluid conduit means connecting said drain means to said inlet opening in said chamber;
d. pump means in said conduit means positioned intermediate said drain and said chamber; and
e. heat exchange means including temperature control means in communication with said conduit means for adjusting the thawing liquid cycled therethrough to a predetermined temperature.

4,062,278

EXPANDING STRAP LOOP FORMING AND FRICTION FUSION MACHINE

Nelson Cheung, Arlington Heights, Ill., assignor to Signode Corporation, Glenview, Ill.
Filed Dec. 20, 1976, Ser. No. 752,011
Int. Cl.² B65B *13/02*
U.S. Cl. 100—4 **21 Claims**

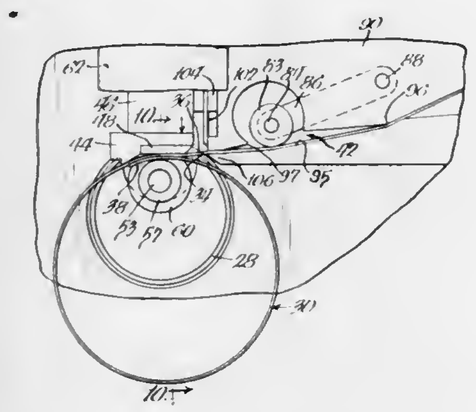

1. An apparatus for forming, tensioning, and securing a strap loop about a package, said apparatus comprising:
means for feeding a length of strap in a path to form a primary strap loop with a portion of the strap loop overlapped by the free end of the length of strap;
means for restraining said free end of the strap from movement while feeding the standing length of the strap to expand the loop to a predetermined size;
means for tensioning the strap to tighten the loop about said package; and
means for joining said free end of the strap and an adjacent overlapped portion of the loop.

4,062,279

TWINE WRAPPING MECHANISM FOR A ROLL FORMING MACHINE

Lowell R. Grube, and Willis R. Campbell, both of Ephrata, Pa., assignors to Sperry Rand Corporation, New Holland, Pa.
Filed Aug. 30, 1976, Ser. No. 718,712
Int. Cl.² B65B *13/18*
U.S. Cl. 100—5 **7 Claims**

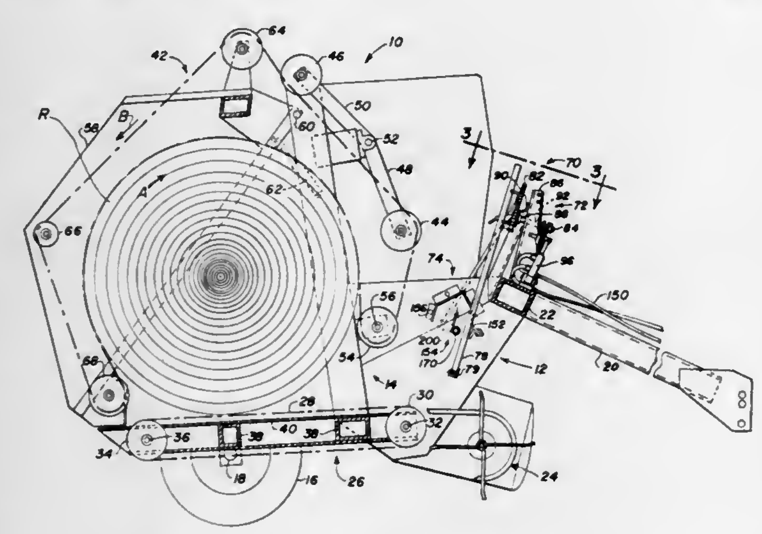

1. An improved wrapping mechanism for a roll forming machine having a frame and a roll forming region for forming a roll of crop material such as hay or the like, the improved mechanism comprising:
a. an elongated tube pivotally mounted on said frame and adapted to dispense a wrapping element such as twine across the bale forming region in a predetermined path;
b. drive means for driving said elongated dispensing tube from a rest position along its predetermined path;
c. severing means mounted on said frame in the vicinity of said predetermined path for receiving a portion of said wrapping element, said severing means including a striker plate and a knife which is movable from a first position to a second position wherein said knife engages said striker plate;
d. latch means mounted on said frame for movement from a tube receiving position to a tube holding position wherein said dispensing tube is positively retained in its rest position; and
e. means interconnecting said severing means and said latch means such that said knife of said severing means is moved from its first position to its second position for severing said twine as said latch means moves from its tube receiving position to its tube holding position when said dispensing tube is driven into said latch means forcing the same to be moved from its tube receiving to tube holding position.

4,062,280

BRAKE FOR TYING NEEDLES OF CROP BALER

Thomas Wayne Ankenman, Moundridge, and George Yatcilla, Newton, both of Kans., assignors to Hesston Corporation, Hesston, Kans.
Filed Aug. 23, 1976, Ser. No. 716,773
Int. Cl.² B65B *13/02*
U.S. Cl. 100—19 A **22 Claims**

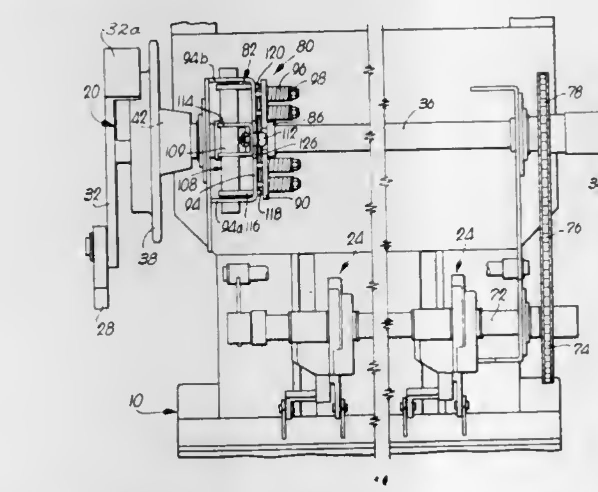

1. In a baler having reciprocable structure used in the production of a finished bale:
a releasable brake for retarding movement of said structure when the brake is applied; and
a control responsive to said movement of the structure for applying and releasing the brake at predetermined points along the path of travel of the structure,
said control including a cam shiftable during movement of said structure and a follower operable by said cam during said shifting of the latter,
said brake being normally applied, said follower being operable to release the brake when actuated by said cam.

4,062,281

SCRAP SHEARING MACHINE AND METHOD OF HANDLING SCRAP

Karl Heinz Tripp, Dusseldorf, Germany, assignor to Lindemann Maschinenfabrik GmbH, Dusseldorf, Germany
Filed Jan. 7, 1977, Ser. No. 757,683
Claims priority, application Germany, Jan. 21, 1976, 2602043
Int. Cl.² B30B *7/04, 15/00*
U.S. Cl. 100—35 **4 Claims**

1. In a scrap shearing machine comprising shears, a feed trough, means for feeding scrap material including a substantial proportion of ferromagnetic material in said trough longitudinally of said trough to said shears, a lateral plunger, means mounting said plunger at one side of said trough for movement laterally of said trough for compacting scrap material in said trough to produce a column of scrap material in said trough, a pressing lid, means pivotally mounting said lid at one side of said trough and drive means operatively connected to said lid to move said lid downwards to compact scrap material downwards in said trough and to move said lid upwards from said trough into an open position, said lid being movable through at least 90° upwards from a horizontal position, the improvement comprising at least one electromagnet, means mounting said electromagnet to said pressing lid and means for selectively energising and de-energising said electromagnet whereby, when said lid is moved downwards and said magnet is energised, said column of scrap is held by said magnet against said lid and movement of said lid to said open position raises said column of scrap material from said trough and turns said column about a longitudinal axis thereof into a turned position and subsequent de-energisation of said magnet causes said column to fall from said lid back into said trough in said turned position.

3. A process for handling scrap material including a substantial proportion of ferromagnetic material prior to shearing said scrap material, said process comprising the steps of:
a. depositing said scrap material in a trough;

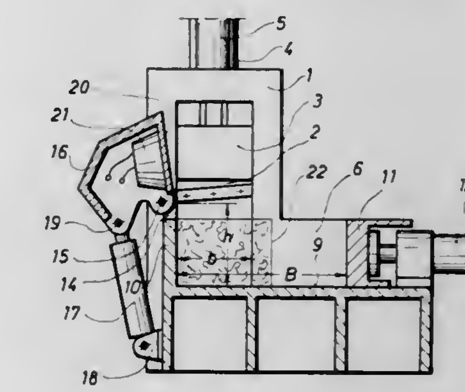

b. compacting said scrap material in said trough in a direction laterally of said trough to produce a column of scrap material in said trough;
c. compacting said column of scrap material downwards in said trough by pivoting a lid of said trough downwardly against a top surface of said column;
d. generating a magnetic field and causing said field to clamp said column against said lid;
e. pivoting said lid upwardly through an angle of at least 90° until said lid is in an upright position and thereby raising said column which is clamped to said lid from said trough and at the same time turning said column through said angle of at least 90° about a longitudinal axis thereof into a turned position; and,
f. de-energising said magnetic field whereby said column is released from said lid and is caused to fall back into said trough with said column in said turned position thereof.

4,062,282

REFUSE COMPACTOR

Samuel Jacob Miller, Junction City, and Erwin George Smith, Danville, both of Ky., assignors to Whirlpool Corporation, Benton Harbor, Mich.
Filed Aug. 24, 1976, Ser. No. 717,367
Int. Cl.² B30B *15/14*
U.S. Cl. 100—53 **11 Claims**

1. In a refuse compactor having a receptacle for holding refuse to be compacted, electrically operated compacting means for compacting refuse in the receptacle with the receptacle disposed in a compacting position, first switch means for interrupting operation of the compacting means in the event the receptacle is displaced a first preselected distance from the compacting position by the compacting means during a refuse compacting operation, and second switch means for preventing operation of the compacting means in the event the receptacle is disposed at least a second preselected distance greater than said first distance from the compacting position, the improvement comprising
stop means carried by said compacting means to be disposed adjacent the receptacle during a compacting operation

permitting the receptacle to be displaced said first preselected distance but preventing displacement of the receptacle said second preselected distance from said compacting position.

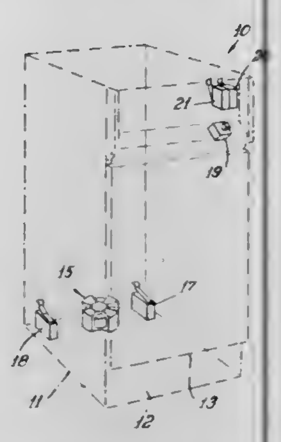

4,062,283
CAN CRUSHER

Stephen H. Kaminski, 215 West Elm Ave., Burbank, Calif. 91503
Filed Apr. 26, 1976, Ser. No. 679,982
Int. Cl.² B30B *15/32*
U.S. Cl. 100—218 7 Claims

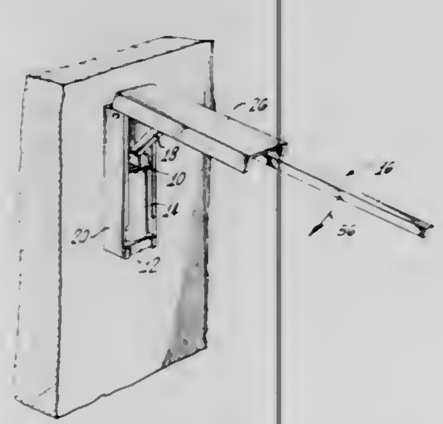

1. A manually operated beverage can crusher, comprising:
an open-faced hollow rectangular housing mountable against a wall, and having a baseplate for supporting a can to be crushed;
a ram mounted for sliding movement within said housing, including a pressure plate and two guide plates integral therewith and substantially perpendicular thereto for slidingly engaging interior walls of said housing;
a lever arm mounted by one end to an upper portion of said housing;
a thrust link pivotally connected to said pressure plate and pivotally connected to said lever arm at a point substantially below its point of pivotal mounting to said housing; and
can ejection means including a leaf spring secured interiorly to said housing and operable to urge the can outwardly from said housing as said ram and said lever arm are raised.

4,062,284
FRICTION PRESS

Hiroyasu Shiokawa, 9-3, Sone-Nishimachi 4-Chome, Toyonaka, Osaka, Japan
Filed Oct. 4, 1976, Ser. No. 729,605
Claims priority, application Japan, Oct. 27, 1975, 50-129596
Int. Cl.² B30B *1/18*
U.S. Cl. 100—289 1 Claim

1. A friction press comprising:
a support frame having a vertical threaded hole therethrough;
a screw bar member threaded through said hole;
a ram member connected to the bottom of said screw bar member and in slidable contact with said support frame;
at least two horizontal circular driving wheels vertically spaced from each other connected to the top of said screw bar;
at least two support arms connected to said support frame on opposite sides of said screw bar member;
at least two vertical rotatable driving disks, each disk hingedly connected through its horizontal transverse axis to one of said support arms at a vertical position between opposite said driving wheels and pivotable at said hinge connection alternately toward and away from contacting either of said driving wheels, said disks being rotatable in different directions;

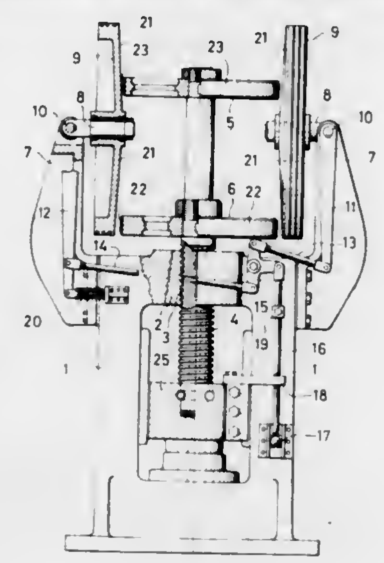

motor means connected to said driving disks for rotating said driving disks in different directions; and
linkage means mounted on said support frame and contactable with said slidable ram member for pivoting said hinged driving disks toward and away from contact with said driving wheels and for being contacted by said ram member.

4,062,285
HAMMER DRIVER CONTROLLER FOR IMPACT PRINTERS

David R. Deetz, Dallas, and Roy H. Ogburn, Lewisville, both of Tex., assignors to Xerox Corporation, Stamford, Conn.
Filed Oct. 15, 1975, Ser. No. 622,571
Int. Cl.² B41J *9/42*
U.S. Cl. 101—93.02 6 Claims

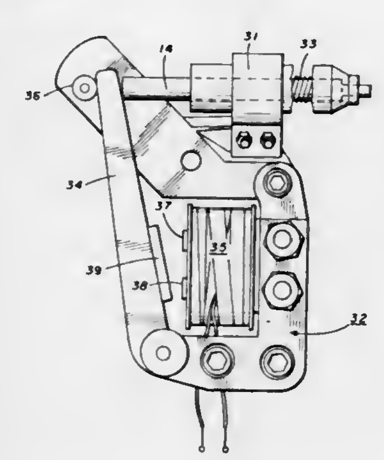

1. In an impact printer having a hammer mounted for movement toward and away from a recording medium to print a selected character on said recording medium on a forward stroke and to rebound away from said recording medium on a rearward stroke, biasing means coupled to said hammer for biasing said hammer rearwardly away from said recording medium, electromagnetic driver means coupled to said hammer for propelling said hammer forwardly against said bias in response to an energizing current having a predetermined set point level to thereby impart impact energy to said hammer, and a controller for applying energizing current to said driver means on command; the improvement comprising control means coupled to said controller for reducing said energizing current to and for substantially maintaining said energizing current at a predetermined finite fraction of said set point level during the rearward stroke of said hammer, whereby said driver means smoothly absorbs shock forces generated by the rebounding hammer.

4,062,286
DESIGN PAINTING KIT

Mary Jane Ford, 4157 SW. 49 Court, Fort Lauderdale, Fla. 33314
Filed Sept. 8, 1976, Ser. No. 721,334
Int. Cl.² B41F *17/26*
U.S. Cl. 101—375 1 Claim

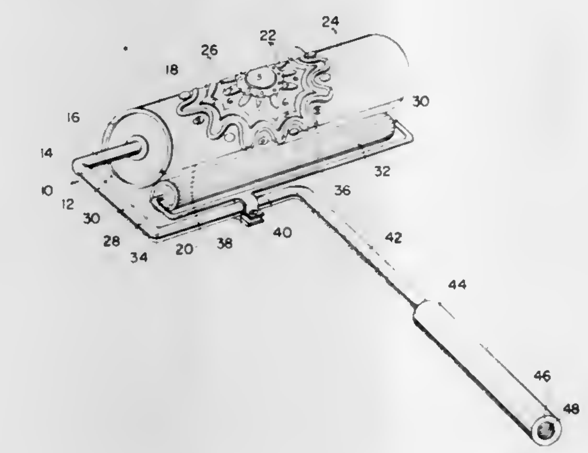

1. A design painting kit comprising:
a. a first design applying means including a first cylindrical tube, a handle having a hand grasping portion thereon, a rod, one end of the rod extending into said first tube and said first tube journalled to and co-axially aligned with the longitudinal axis of said rod for rotation thereabout, the other end of said first cylindrical tube undergoing two right angle bends to form a U-shaped portion with said first tube journalled about a first leg thereof, and a second leg thereof extending parallel to said first leg and to said tube, said second leg undergoing a third right angle bend at a point along the length of said second leg midway between the ends of said first tube, said handle fixedly secured to and coaxially aligned with said other end of said rod at a point beyond said third right angle bend, said hand grasping portion of said handle having a hole therein, said handle having a cylindrical shape, the longitudinal axis of said hole being positioned in co-axial alignment with said hand grasping portion of said handle, a plurality of rubber-like pads, one lateral surface of each of the rubber-like pads carrying a pressure sensitive adhesive, one of said rubber-like pads being disposed removably secured to the exterior surface of said first cylindrical tube, the other lateral surface of each of said rubber-like pads carrying embossed indicia, the embossed indicia including a design outline and further including numerals depicting selected areas of the design, a second cylindrical tube, the second cylindrical tube having an ink impregnated resilient material fixedly secured thereto, the second cylindrical tube removably secured to the rod at a point between the ends of said second leg of said U-shaped portion of said rod, said second cylindrical tube being journalled for rotation about its longitudinal axis, the axis of rotation of said second cylindrical tube being disposed in spaced apart and parallel relationship with the axis of rotation of said first cylindrical tube, the exterior surface of the ink impregnated resilient material being disposed in touching ink-transferring engagement with a portion of said embossed indicia;
b. a second design applying means including a plate, a shaft, one end of said shaft being disposed fixedly secured in perpendicular relation to one lateral surface of the plate, another of said rubber-like pads being disposed removably secured to the other lateral surface of said plate, a container, the container containing a quantity of ink;
c. a plurality of paint containers, said plurality of paint containers each containing a quantity of individually colored paint bearing a predetermined relation to said numerical indicia, and a plurality of brushes;

whereby said first and second design applying means are selectively operable to print said design outline on a substrate, said design including said numerical indicia and wherein at least one of said plurality of brushes is utilized to apply at least one of said colored paints to the interior of said design outline in accordance with said numerical indicia printed onto said substrate by said first and second design applying means.

4,062,287
RESILIENT INSERT FOR TIRE INFLATOR

Robert Millray, Saugus, Calif., assignor to Allied Chemical Corporation, Morris Township, N.J.
Continuation of Ser. No. 554,790, March 3, 1975, abandoned. This application Jan. 7, 1977, Ser. No. 757,543
Int. Cl.² F42B *3/04;* B65B *31/00;* B60C *23/10;* B67B *7/24*
U.S. Cl. 102—39 5 Claims

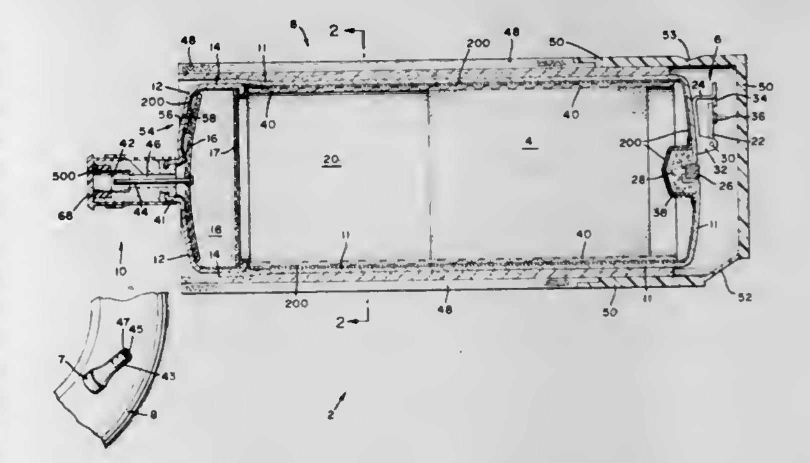

1. A light, portable, miniaturized tire inflator pressure cannister for inflating a tire having an inlet valve, and adapted to be carried in one hand, comprising:
a pyrotechnic material as sole source of inflating gas located within an inner surface of the cannister to generate the inflating gas upon ignition to inflate the tire, without a source of stored fluid;
an ignitor mechanism located adjacent to said pyrotechnic material to ignite and cause said pyrotechnic matrial to burn;
said pressure cannister comprised of a pressure vessel to hold said pyrotechnic material, said pressure vessel having a tire end and a pyrotechnic end, and a pressure cannister cap, a portion of which is adapted to fit at the outer edge of said tire end of said pressure vessel;
a nozzle mounted on said pressure cannister cap, said nozzle including a flexible insert mounted thereon, the insert connecting directly to the valve of the tire; and
an internal insulation liner composed of an endothermically decomposing compound located on substantially the entire interior surface of said cannister for maintaining the temperature of said cannister at about 350° F. or below during generation of said inflating gas.

4,062,288
INITIATOR FOR TIRE INFLATOR
Robert Millray, Saugus, Calif., assignor to Allied Chemical Corporation, Morris Township, N.J.
Continuation of Ser. No. 554,898, March 3, 1975, abandoned. This application Jan. 10, 1977, Ser. No. 758,377
Int. Cl.^{2} F42B *3/04;* **B65B** *31/00;* **B60C** *23/10;* **B67B** *7/24*
U.S. Cl. 102—39 **2 Claims**

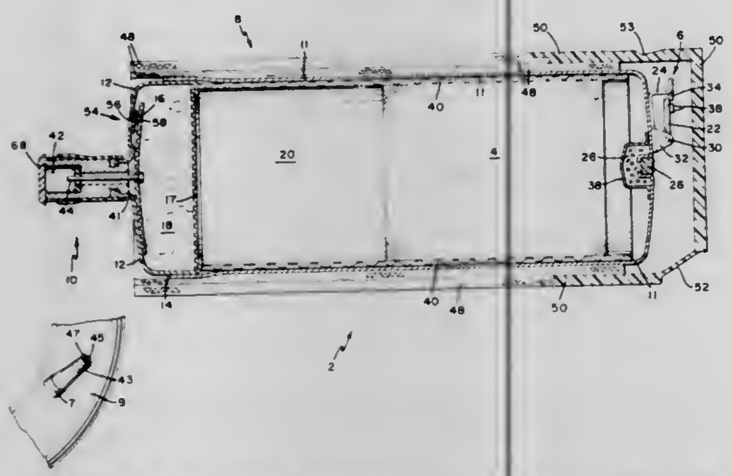

1. A light, portable, miniaturized tire inflator for inflating a tire having an inlet valve, and adapted to be carried in one hand, comprising:
  a pyrotechnic material as sole source of inflating gas to generate the inflating gas upon combustion to inflate the tire, without a source of stored fluid;
  an ignitor mechanism located adjacent to said pyrotechnic material to ignite and cause said pyrotechnic material to burn;
  a pressure vessel to hold said pyrotechnic material, said presssure vessel having a tire end and a pyrotechnic end; and
  a nozzle mounted on said tire end of said pressure vessel, said nozzle being adapted to be connected directly to the valve of the tire;
  said ignitor mechanism including a firing pin assembly comprising a firing pin and legs extending therefrom movable with a longitudinal bore adjacent said nozzle by said tire valve;
  a spring for biasing said firing pin assembly;
  prongs on the end opposite of said legs to said firing pin;
  shoulder means on said bore adjacent said nozzle for engaging said prongs and retaining said firing pin assembly against said spring unloaded condition;
  a prime spaced from said firing pin in loaded condition and adpated to be actuated by said firing pin by impact of said firing pin upon said primer on disengagement by said tire valve of said prongs from said shoulder means;
  an ignition means adapted to be ignited by said primer and cause combustion of said pyrotechnic material; and
  an insulator disposed around substantially the entire exterior surface of said pressure vessel.

4,062,289
MOUNTING BRACKET
Rhett McNair, Orange, Calif., assignor to Aqua-Craft, Inc., San Diego, Calif.
Filed Sept. 23, 1975, Ser. No. 615,980
Int. Cl.^{2} F42B *13/54;* **A47F** *7/00;* **F41C** *33/00;* **A47K** *1/08*
U.S. Cl. 102—48 **9 Claims**

1. A tool mounting bracket comprising a receiver for receiving a tool, a flexible extension connected to the receiver and extending outward from the receiver, tool engaging means having a complementary structure connected to the extension remote from the receiver for engaging a complementary structure on the tool, and spring-holding means connected to the

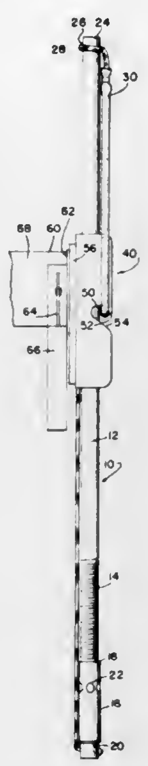

receiver for holding a spring to urge the tool into continued engagement with the engaging means.

4,062,290
ELECTRICAL FUZE FOR PROJECTILES
Cornelius Mayer, Fallanden, Switzerland, assignor to Werkzeugmaschinenfabrik Oerlikon-Buhrle AG, Zurich, Switzerland
Filed Dec. 13, 1976, Ser. No. 750,260
Claims priority, application Switzerland, Jan. 23, 1976, 811/76
Int. Cl.^{2} F42C *11/00*
U.S. Cl. 102—70.2 R **4 Claims**

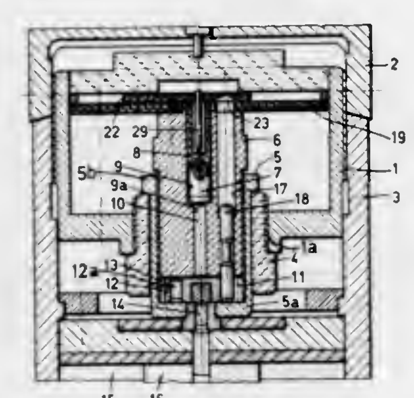

1. An electrical fuze for a projectile, especially a rocket, comprising:
  a detonator cap;
  means providing a firing chain for the detonator cap;
  a short-circuit connection for bridging the firing chain;
  a device for interrupting the short-circuit connection;
  said short-circuit connection comprising:
    part of a conductor track arranged at a printed circuit board;
    said part of the conductor track adhering to a layer of the printed circuit board forming a fracture location.

4,062,291
BALLAST TAMPING TOOL
Edward L. Vick, 4861 Seven Hills Road, Castro Valley, Calif. 94546, and Arlie E. Smith, 3791 Mosswood Drive, Lafayette, Calif. 94549
Continuation-in-part of Ser. No. 553,315, Feb. 24, 1975, abandoned. This application Feb. 2, 1976, Ser. No. 654,395
Int. Cl.^{2} E01B *27/00*
U.S. Cl. 104—10 **3 Claims**

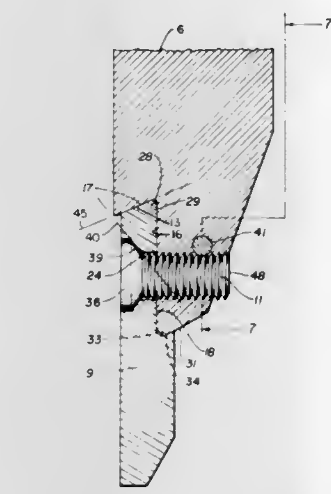

1. An elongated bar and a separate tamper foot and demountable attaching structure for said bar and foot adapted for driving with said foot into and through ballast to be tamped, the improvement comprising:
  said bar having a laterally offset surface and an adjacent longitudinally extending surface and said foot having an upper end and an adjacent longitudinally extending surface forming mating mortise and tenon and interfitting in a mortise and tenon joint;
  said bar having a threaded opening at and extending substantially perpendicular to its said longitudinal surface, and said foot being formed with a bolt-receiving opening at and extending substantially perpendicular to its longitudinally extending surface;
  the spacing between the axis of said bar opening and said joint being less than the spacing between the axis of said foot opening and said joint;
  a bolt mounted in said foot opening and threadably engaged in said bar opening and effecting relative displacement of said tenon into said mortise;
  said foot opening being formed with an enlarged frusto-conical bolt-receiving socket, and said bolt having a head of mating frusto-conical form, said bolt head bearing on the normally upper side of said socket and wedge-driving said mortise and tenon joint into compressive engagement;
  said bar having a bore opening to a side thereof and extending transversely to and intersecting the periphery of said threaded opening; and
  a pin mounted in said bore and driven through at least one of the threads of said bolt to key said bolt against rotation.

4,062,292
UTILITY TAMPER WORKHEAD
Charles J. Derler, Ludington, Mich., assignor to Jackson Vibrators, Inc., Ludington, Mich.
Filed Oct. 22, 1975, Ser. No. 624,764
Int. Cl.^{2} E01B *27/16*
U.S. Cl. 104—12 **5 Claims**

1. In a tamper having a workhead support horizontally translatable and vertically positionable relative to a rail mounted on cross ties supported in ballast, the combination comprising, a pair of cross arms mounted on said support transversely to said rail, a pair of platforms pivoted on said cross arms with one platform on each side of said rail, two pairs of tamping blades one pair pivoted on each of said platforms on axes parallel to and spaced wider than the width of said ties, a single vibration motor mounted on each of said platforms for transmitting vibration to said blades, a pair of actuators with one actuator coupling each pair of blades for squeezing the blades toward a tie, said platform-cross arm pivots being disposed laterally of said rail and outwardly of said blades so that downward movement of the blades into the ballast tilts the

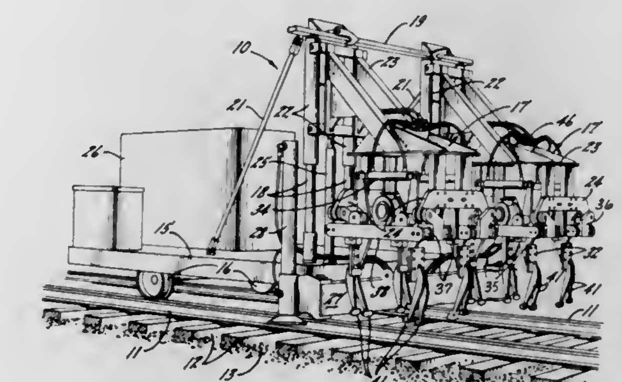

platform and the blades of each pair toward the rail, and means for vertically positioning said support between a travel position when said blades are clear of said rail, ties and ballast to a working position when said blades are inserted into the ballast for tamping the ballast region beneath the tie portions underlying the rail.

4,062,293
TROLLEY RIDE APPARATUS
Joseph I. Davis, Miami Shores, Fla., assignor to Davis-Grabowski, Inc., Miami, Fla.
Filed Mar. 8, 1976, Ser. No. 665,126
Int. Cl.^{2} B61B *12/02*
U.S. Cl. 104—113 **1 Claim**

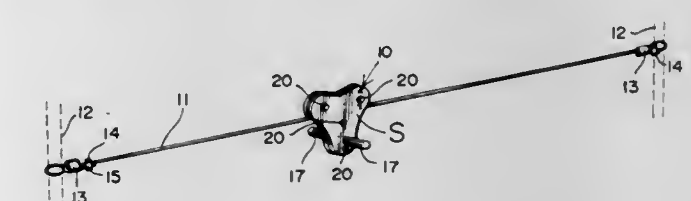

1. A trolley ride apparatus for sliding along a wire stretched between two uprights comprising a pair of substantially identical side frame members having a flat side wall in substantially parallel relation to each other and one integrally formed tubular member forming handles extending outwardly from one side of the frame member and in axial alignment with the handle of the other frame member when the frames are joined, each of said tubular members being closed at its outer end portion, each of said side frame members having a plurality of bores extending therethrough, bolt means extending through two of said bores fastening said side frame members together, a pair of pulleys rotatably mounted on said bolt means between said pair of side walls and vertically above said tubular members, further bores extending through said side walls, raised surfaces formed about said further bores on each side frame members in contact engagement with opposing raised surfaces to maintain said side frame members in spaced relation to each other, fastening means extending through said further bores for securing said side walls together and pipe means extending along and contained within said tubular members for strengthening said handles.

4,062,294
MODEL RAILWAY POWER SUPPLY
Mordecai Elias Cohen, Barnet, England, assignor to Rosefair Electronics Limited, Watford, England
Filed Mar. 17, 1976, Ser. No. 667,909
Claims priority, application United Kingdom, Mar. 20, 1975, 11739/75; Oct. 17, 1975, 42758/75
Int. Cl.² B60M *1/00*
U.S. Cl. 104—149 **13 Claims**

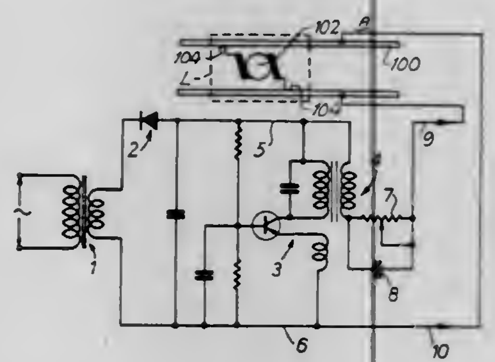

1. In a power supply for a model vehicle installation wherein electrically powered model vehicles carrying their own respective drive motors are adapted to travel on a track drawing electrical power from trackside conductors through contactors on the vehicles, the improvement comprising normally suppressed means for supplying to said trackside conductors, in addition to the electrical power supplied to drive said vehicles, an alternating current component of such frequency and amplitude as to be capable of breaking down a contact-inhibiting dielectric layer formed between the vehicle contactors and the trackside conductors, said alternating current supply means becoming operable only in response to the detection of a build-up of the dielectric layer between said contactors and said conductors.

6. An electrical power supply system for model railroads or the like of a type including a direct-current motor-driven vehicle having contact means which engage a stationary conductive surface through which the driving power is supplied, comprising
a. means for supplying direct-current control current to said conductive surface for driving the vehicle;
b. means for varying the level of the direct-current control current to control the operating speed of the vehicle; and
c. oscillator means for modulating the direct-current control current with an alternating-current signal to supply alternating-current power to the conductive surface for removing by ionization a dielectric layer of impurities thereon.

4,062,295
EMERGENCY SLIPPER FOR HIGH-SPEED VEHICLES
Lutz Hamann, Olching, Germany, assignor to Maschinenfabrik Augsburg-Nurnberg Aktiengesellschaft, Munich, Germany
Filed Aug. 2, 1976, Ser. No. 710,814
Claims priority, application Germany, Aug. 16, 1975, 2536575; Aug. 16, 1975, 2536574
Int. Cl.² B61H *7/06;* **B61B** *13/08*
U.S. Cl. 104—279 **11 Claims**

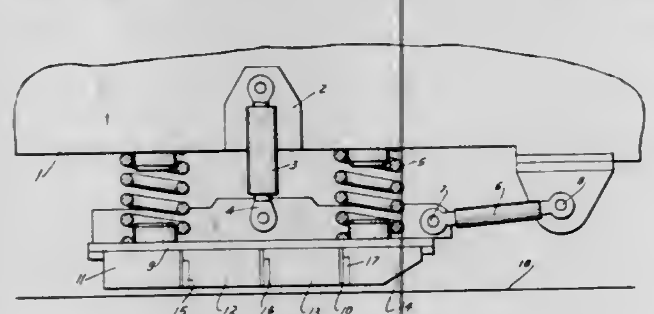

1. An emergency slipper for a high speed vehicle, the slipper being of the type which is normally spaced above a track but which comes into sliding engagement with the track in an emergency situation, the slipper comprising:
a. slide means having a bottom surface for engaging and sliding easily along the track, said slide means comprising a plurality of slide blocks aligned in the longitudinal direction of the track,
b. a scraper plate between each two successive slide blocks for engaging and scraping the surface of the track, and
c. a groove directly in front of each scraper plate, said groove being located in the rear face of a slide block and its respective scraper plate being arranged against the front face of the next succeeding slide block.

4,062,296
DRIVE TRUCKS
Arthur K. Barnes, and H. T. Stevens, both of Alliance, Ohio, assignors to The Alliance Machine Company, Alliance, Ohio
Filed July 9, 1976, Ser. No. 703,895
Int. Cl.² B61C *9/48*
U.S. Cl. 105—163 R **6 Claims**

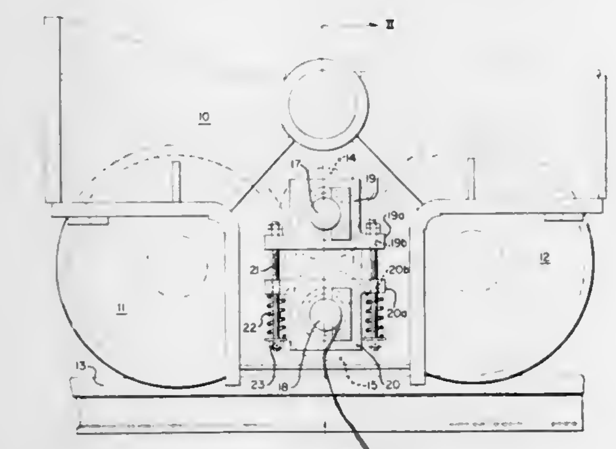

1. A bridge truck assembly for cranes and the like having at least two in-line wheels on a side adapted to engage a trackway, a prime mover drivingly connected to one of said wheels, a pair of rotatable drive members engaging the circumference of both said in-line wheels between and on opposite sides of the center line between said wheels and resilient means operably connecting and acting on both said rotatable drive members urging them toward said center line and into engagement with both wheels at a selectively variable force whereby when the prime mover drives one of said wheels said one wheel drivingly engages the other wheel through said rotating members.

4,062,297
FREIGHT CAR LADING TIE DOWN ANCHOR
Richard C. Snyder, Michigan City, Ind., and Harold A. Wold, New Buffalo, Mich., assignors to Pullman Incorporated, Chicago, Ill.
Filed Feb. 17, 1976, Ser. No. 658,784
Int. Cl.² B60P *7/08, 7/16;* **B61D** *17/04, 45/00*
U.S. Cl. 105—480 **4 Claims**

1. A railway box car having a body including vertical side walls,
said side walls including vertical side posts generally hat-shaped in horizontal cross-section and including longitudinally extending inner brim flanges, wall sheathing having vertical edge portions overlapping longitudinally spaced outer portions of said brim flanges and being connected thereto, and an improved lading strap anchor unit, comprising:
a vertical anchor plate having an inner face and a vertically elongated outwardly depressed framing portion stamped therein and including vertical edge portions connected to said brim flanges in contiguous relation to the vertical edge portions of the sheathing and providing a flush inner vertical wall surface therewith,

said framing portion having inner and outer levels spaced outwardly from said inner face and including a plurality of vertically spaced attaching surfaces at said first level,
a vertical anchor bar connected to said attaching surfaces, and

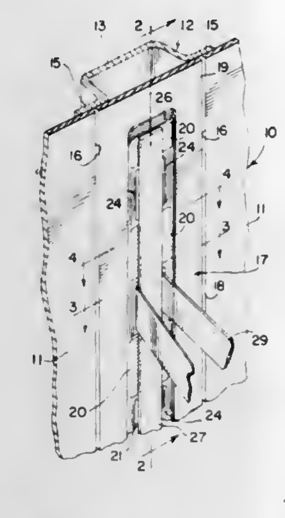

outwardly dished pocket sections in said framing portion between said attaching surfaces extending from said inner face to said second level, thereby providing vertical openings adapted to receive a lading strap about said anchor bar.

4,062,298
ANTI RATTLE TRACK FITTING
Kirby B. Weik, Litchfield, Conn., assignor to UOP Inc., Des Plaines, Ill.
Filed Nov. 10, 1976, Ser. No. 740,626
Int. Cl.² B60P *7/08;* **B65J** *1/22*
U.S. Cl. 105—482 **5 Claims**

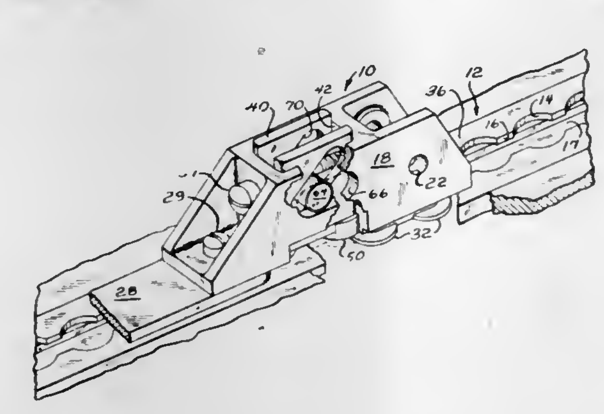

1. A track fitting for use with a slotted floor track of the type used in aircraft wherein said track has a bottom portion, vertical side portions, and top portions carried by each of said side portions and defining the side edges of a longitudinal slot which overlies the bottom and is spaced therefrom, so as to define an open channel, said top portions on each side of said slot being formed so as to define a plurality of alternately spaced retaining lip portions and concave relieved portions, said track fitting comprising an elongated housing having a length at least as great as the axial distance between three of said spaced retaining lip portions, aperture means in an upper portion of said housing for anchoring a load to said fitting, a plurality of lobe members extending downwardly from said housing, said lobe members being shaped so as to be capable of being dropped vertically through a plurality of said concave relieved portions in said track and then moved axially with said housing along the track to bring said lobe members under the retaining lip portions, shear pin means mounted for vertical movement in said housing, said shear pin means being capable of being moved downwardly into a selected one of said plurality of concave relieved portions in said track when said lobes underlie said retaining lip portions and contacting the edges of said concave relieved portions to restrict horizontal movement of said fitting in said track while said lobe members contact the underside of said retaining lip portions to restrict upward movement, said shear pin means including a body portion having a first slot therein, said body portion having vertical side walls slidingly engagable with a recess in said housing, a drive pin mounted transversely of both said first slot in said body portion and a second slot in the housing, said first and second slots being at an angle to each other, and threaded drive means engagable with said pin to move said pin simultaneously along each of said first and second slots, the movement of said drive pin in one direction causing a portion of said shear pin means to move vertically into engagement with a portion of said track to cause said housing to be moved vertically into binding engagement with said track.

4,062,299
DEMOUNTABLE BAIT CUTTING TABLE
Anthony B. Smith, 3633 Highway 33, Neptune, N.J. 07753
Filed Nov. 8, 1976, Ser. No. 740,007
Int. Cl.² A47B *23/00*
U.S. Cl. 108—42 **3 Claims**

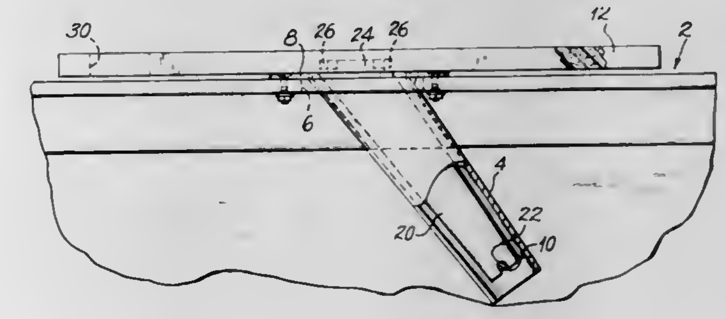

1. In combination:
an elongated socket member fixed to a support having a generally horizontal surface to extend downwardly from said surface at an oblique angle;
a table leg in said socket and extending upwardly therefrom;
interengaging means on said leg and socket holding said leg in fixed orientation in said socket; and
a flat table member having its central portion removably secured to the upper end of said leg in predetermined orientation thereto and at such an angle thereto that said table member lies in a substantially horizontal place generally parallel to and adjacent said surface.

4,062,300
MULTIPURPOSE PALLET SYSTEM
Eric John Real, Cinderford, England, assignor to Rank Xerox Ltd., London, England
Filed May 10, 1976, Ser. No. 684,518
Claims priority, application United Kingdom, Oct. 24, 1975, 43920/75
Int. Cl.² B65D *19/26*
U.S. Cl. 108—53.5 **10 Claims**

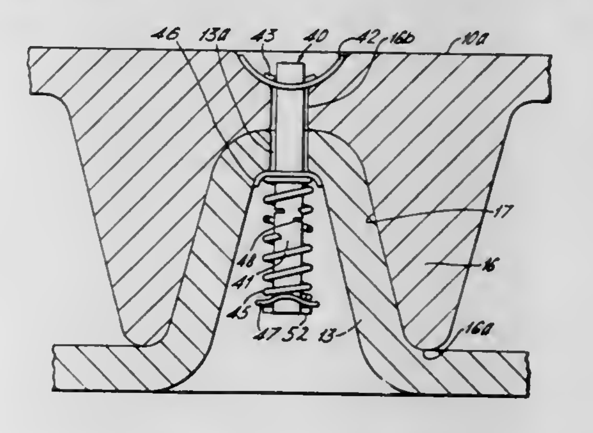

1. A multipurpose pallet comprising:
a. a deck member having a generally planar upper surface with a plurality of openings of substantially the same size therein, the openings being adapted to receive inserts, the

lower surface of the deck member having projections defining sockets extending downwardly; and
b. a base member having upwardly extending projections positioned and shaped to contact the projections extending downwardly in a mating fashion, the base member supporting the deck member so that the base member and the deck member are in substantially parallel planes, the deck member and base member being fastened together by shear pins passing through aligned holes in the upwardly and downwarly extending projections, spring means connected to one end of each of said shear pins and to one of said members with the other end of each of said shear pins connected to the other of said members thereby providing a yieldable break-away connection between the deck member and the base member all the downwardly extending projections being similarly shaped and all the upwardly extending projections being similarly shaped so that any upwardly extending projection and any downwardly extending projection can be brought together in a mating fashion.

4,062,301
SNAP PALLET
Peter R. Pitchford, 635 Millwood Road, Toronto, Ontario, Canada
Filed Dec. 11, 1975, Ser. No. 639,954
Claims priority, application Canada, Apr. 29, 1975, 226001
Int. Cl.² B65D *19/28*
U.S. Cl. 108—56.1 **4 Claims**

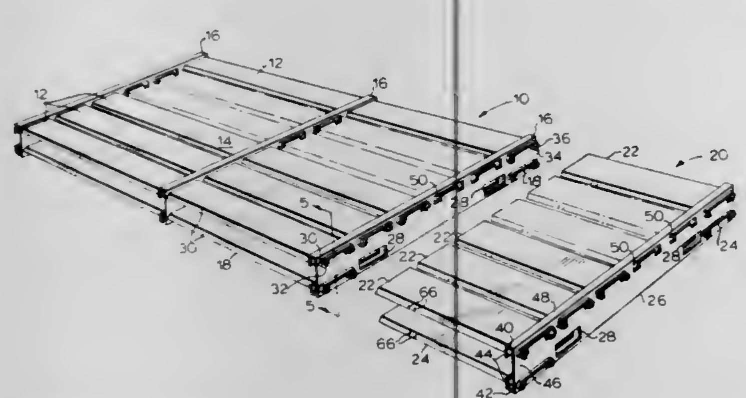

1. A pallet comprising:
a. a plurality of longitudinal deck panels adapted to be located horizontally and parallel to form a load bearing surface, the deck panels having longitudinal edge portions defining a plurality of spaced-apart slot openings therein, said edge portions further including longitudinal transversely extending ribs;
b. a plurality of spaced-apart stringer members having transverse openings therethrough, the deck members being adapted to pass through said stringer openings upon transverse deflection of said longitudinal edge portions, the periphery of said stringer openings defining retaining portions adapted to be located in said slot openings for releasably retaining the deck members in position;
c. said edge portions being biased towards said retaining portions; and
d. the peripheries of said stringer openings also defining projecting tabs for resisting inadvertent transverse deflection of said edge portions, the tabs being located generally opposite the retaining portions and adapted to engage said ribs when said retaining portions are located in said slot openings, so that upon transverse deflection of said edge portions away from said retaining portions and tabs the retaining portions are disengaged from said slot openings to permit relative movement between the stringer and deck members.

4,062,302
SHELVING ASSEMBLY WITH REMOVABLE DIVIDER INSERTS
Bradford J. Krizan, Plymouth, Minn., assignor to Safco Products Co., Minneapolis, Minn.
Filed Dec. 15, 1976, Ser. No. 750,825
Int. Cl.² A47B *35/00*
U.S. Cl. 108—60 **10 Claims**

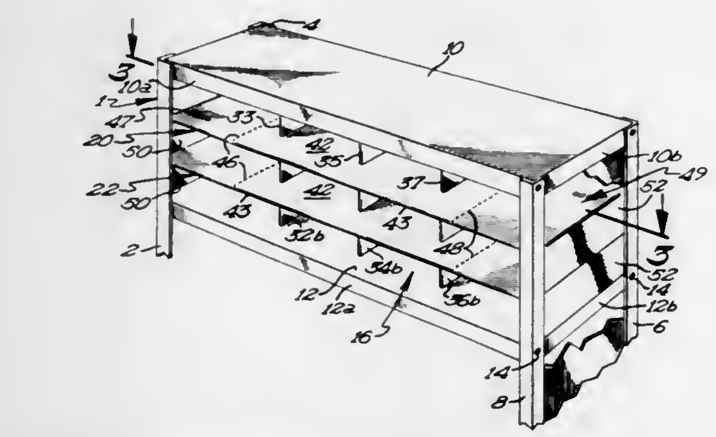

1. A shelf and divider assembly comprising:
a shelf unit comprised of rigid, upright end support means spaced apart a predetermined shelf length and a plurality of rigid shelves secured therebetween in vertically spaced relation, each of said end support means having a vertically extending front segment projecting inwardly across the front face of said shelf unit beyond the end extremities thereof;
a divider unit removably positioned between a pair of said rigid shelves and resting on one of said shelves, said divider unit being comprised of an upright divider support member and a plurality of fiberboard partitions restrainably engaged therewith; and
at least on locking segment on one of said partitions at each end of said divider unit in a locking position behind said vertically extending front segments of said end support means to restrain said divider unit against forward movement of said shelf unit, said locking segments being movable inwardly from said end support means out from behind said vertically extending front segments thereof to non-locking positions wherein said divider unit may be freely inserted between and removed from said rigid shelves of said shelf unit without interference with said end support means.

4,062,303
FLUID DISPENSING ANTI-BURGLAR BOOBY TRAP DEVICE
Charles Robert Fegley, 1606 Frush Valley Road, Laureldale, Pa. 19605
Filed June 24, 1976, Ser. No. 699,519
Int. Cl.² E05G *1/12*
U.S. Cl. 109—29 **8 Claims**

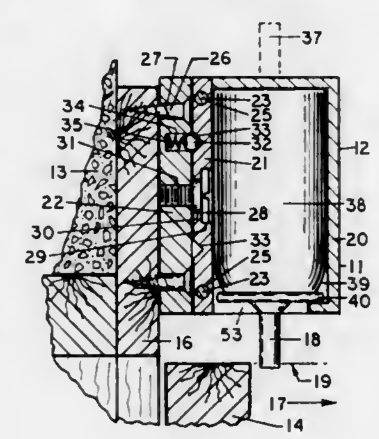

1. A fluid dispensing anti-burglar booby trap device for attachment to a surface such as a wall wherein said device is associated with a second surface such as a door and arranged such that movement of the second surface will cause said device to dispense a fluid in the event unauthorized opening is attempted, the device comprising:
a. a container of pressurized fluid having a fluid-dispensing element adapted to release fluid under pressure when actuated;
b. a passageway in said fluid-dispensing element for directing fluid from said pressurized container;
c. a body member having means for supporting said pressurized container;
d. a mounting plate for securing said device to one surface having means for movably mounting said body member whereby said body member may be moved between an inactuatable position and an actuatable position, said body member when in said inactuatable position permitting movement of said second surface with which the device may be associated, said body member when in said actuatable position placing said fluid-dispensing element of said pressurized container in position to be actuated upon unauthorized movement of said second surface.
e. and means for moving said fluid-dispensing element by a second surface from a first position to a second position whereby upon movement of one surface relative to the other said fluid-dispensing element is actuated to release said pressurized fluid from said container when said body member is in said actuatable position.

4,062,304
APPARATUS FOR THE PYROLYSIS OF WASTE PRODUCTS
Oskar Herbold, Meckesheim, and Dieter Dittloff, Sinsheim, both of Germany, assignors to Helma Lampl, Sinsheim-Rohrbach, Germany
Filed July 21, 1976, Ser. No. 707,239
Claims priority, application Germany, Apr. 2, 1976, 2614417
Int. Cl.² F23G *5/00;* **F23K** *3/00*
U.S. Cl. 110—8 R **3 Claims**

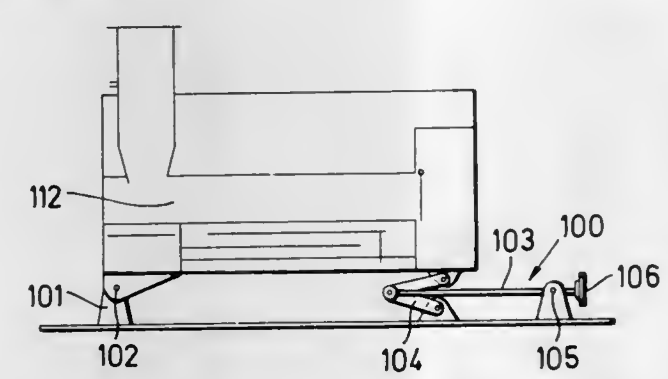

1. An apparatus for carrying out the pyrolysis of waste products comprising:
a reactor vessel having an entrance end and a delivery end;
heating means disposed around said reactor vessel for heating the waste products in the vessel;
an air tight charging hopper at the entrance end of the reactor vessel;
an air tight delivery chamber at the delivery end of said reactor vessel;
means for driving the waste products through the reactor vessel between said entrance and delivery ends said driving means including a hollow shaft member for conducting hot fluid through said delivery means, said hollow shaft member including a plurality of through apertures, said shaft member further including a plurality of transverse tube members for preventing the escape of the hot fluid said tube members being gas tightly disposed within the through apertures of the shaft member, said driving means further including a plurality of arcuate blade members having elongated stem portions, said stem portions being slidingly fitted within said transverse tube members whereby the heat created by the hot fluid conducted through the hollow shaft is quickly transmitted through the transverse tube members, to the stem portions of the blade members, to the blades and to the waste products being treated;
a blower, the suction side of which is connected to the delivery end of the vessel; and
means for adjusting the angle of inclination of the reactor vessel relative to the horizontal whereby the reaction time of the waste products in the vessel can be controlled.

4,062,305
CROP INTERSEEDING IMPLEMENT
John F. Stoker, 101 O'Brien Road, Lee's Summit, Mo. 64063
Filed June 14, 1976, Ser. No. 695,480
Int. Cl.² A01C *5/06*
U.S. Cl. 111—1 **3 Claims**

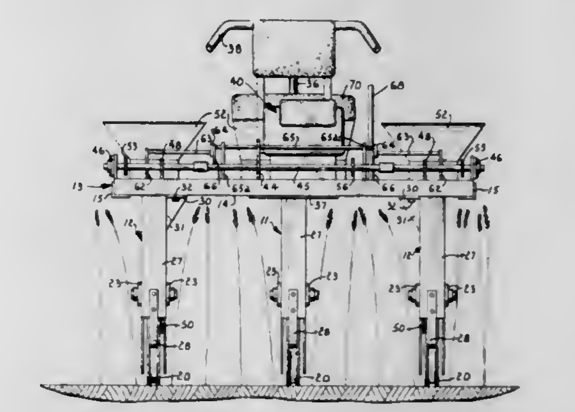

1. A self-propelled interseeding implement for planting seeds such as beans between closely spaced rows of a growing crop of small grain such as wheat which has a substantial height, said implement comprising:
a plurality of ground support wheel assemblies each including a ground engaging support wheel having a cup shaped periphery for compacting soil about the planted seeds, said ground support wheel assemblies being spaced apart with each being narrow enough to pass between adjacent rows of the growing crop of small grain;
a fender for each ground support wheel assembly supported forwardly of same, said fenders being arranged to substantially enclose said wheel assemblies and to pass between adjacent rows of the growing crop of small grain in a manner to separate overlapping plants in adjacent rows of the growing crop of small grain;
a frame supported on and interconnecting said wheel assemblies, said frame being elevated above the growing crop to pass thereover;
an engine mounted on said frame and drivingly coupled to at least one of said wheel assemblies to propel said implement; at least one of said wheel assemblies being used for steering;
at least one sharp planting runner supported on said frame and operable to penetrate the ground at a location to form a narrow furrow forwardly of each cup shaped wheel and between adjacent rows of the growing crop; and
means for depositing seeds in said furrows fowardly of said ground engaging support wheels, whereby said ground engaging support wheels subsequently compact the soil about the seeds planted in said furrows.

4,062,306
APPARATUS FOR DISTRIBUTING AGRICULTURAL AMMONIA
Raymond A. Wosmek, Glencoe, Minn., assignor to AG Systems, Inc., Hutchingson, Minn.
Filed Dec. 22, 1976, Ser. No. 753,550
Int. Cl.² F23B *1/28*
U.S. Cl. 111—7 **3 Claims**

1. In agricultural apparatus for delivering a liquid under

pressure from a container to an array of implement applicators drawn through the soil by a traction vehicle having a source of power fluid, the improvement which comprises:
connection means between said container and said applicators including a valve having a body and a stem rotatable in the body;

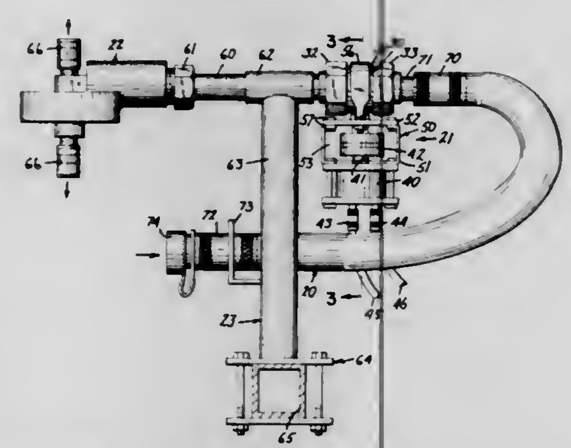

a rotary fluid motor;
means mounting said motor on said body in driving relation to said stem;
and means controlling the supply of power fluid to said motor to cause opening and closing of said valve.

4,062,307
BINDING MACHINE FOR MATERIALS SUCH AS CARPETS, CARPET STRIPS OR THE LIKE
Stefan Michelberger, Laudenbach, Main-Tauber-Kreis, Germany, assignor to Firma Maximilian Janser, Germany
Filed Dec. 30, 1975, Ser. No. 645,467
Claims priority, application Germany, Jan. 8, 1975, 2500461; Nov. 18, 1975, 2551712
Int. Cl.^{2} D05B *23/00*
U.S. Cl. 112—7 **32 Claims**

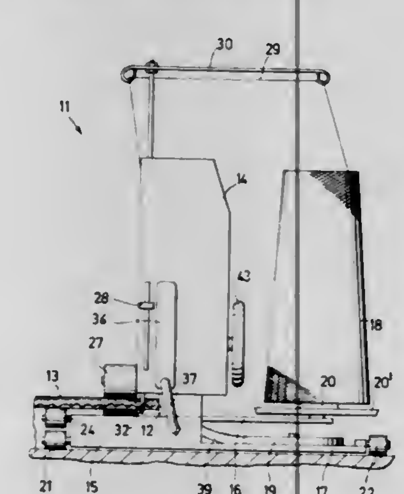

1. A binding machine for materials having an upper carpet surface and a lower basic surface such as carpets, carpet strips and the like, comprising:
a machine frame provided with a drive motor;
said motor driving a binding mechanism means including a substantially vertically guided straight needle;
said binding mechanism being mounted on a base member or support means for lifting the region of the material to be bound with the material being maintained during binding in a position with the upper carpet surface up;
said machine frame being provided with a holder for the supply of a single binding thread introduced via the straight needle from above;
means for carrying the material to be bound through the binding mechanism means;
said binding mechanism including a looping mechanism means for looping said single thread;
said machine frame with said motor, said carrier means and said binding mechanism means forming an integral, compact, portable unit operable by means of at least one hand grip to guide the binding machine along the outside edge of the material to be bound;
said support means for lifting the region of the edge of the material being bound being of a relatively low or flat to the floor configuration relative to the configuration of the machine frame, and being short in the direction in which the material is carried through the machine;
said carrying means having roller means mounted on the edges of an upper portion of said support means for guiding the lower basic surface of the material to be bound which is partially arched up to the upper surface of said support means from the flat to the floor position during binding; and,
runners mounted to the lower portion of said support means for enabling movement of said machine on a floor.

4,062,308
TWO-PILE HEIGHT YARN FEED FOR CONVENTIONAL TUFTING MACHINE
Abram N. Spanel, Princeton, N.J.; P. Frank Eiland, Stamford, and David R. Jacobs, New Canaan, both of Conn., assignors to Abram N. Spanel, Princeton, N.J.
Filed June 25, 1976, Ser. No. 699,906
Int. Cl.^{2} D05C *15/18*
U.S. Cl. 112—79 A **15 Claims**

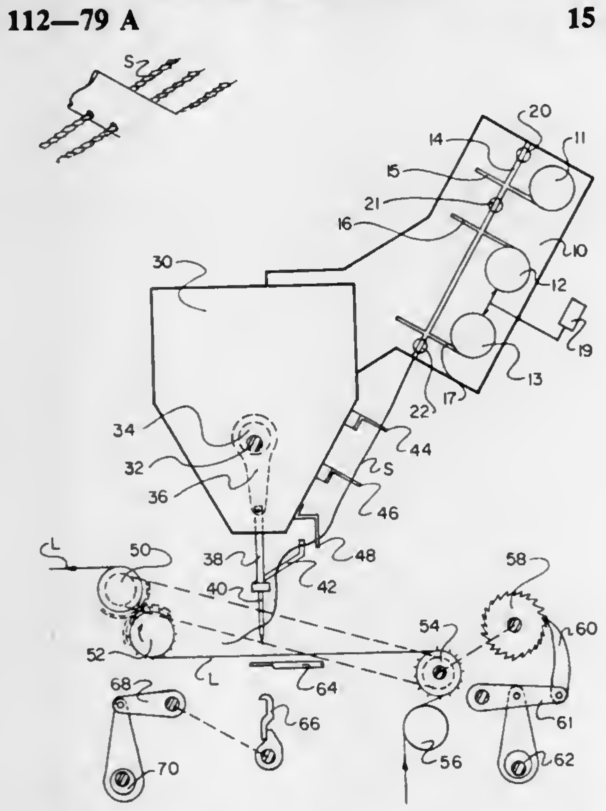

1. Tufting apparatus or the like including means for metering and feeding lengths of yarn from a creel to a tufting needle comprising:
a creel pulling member engageable with the yarn and positioned to pull a length of yarn from the creel;
a first metering member for selectively metering a predetermined length of yarn to be fed to said tufting needle;
a second metering member for selectively metering a different predetermined length of yarn to be fed to said tufting needle; and
yarn clamping means operable to engage and release yarn during each feeding and metering cycle.
14. A method of tufting wherein yarn is fed to a tufting needle from a creel comprising the steps of:
pulling by a first pulling element a length of yarn from the creel while the yarn is clamped to prevent it from being pulled from the opposite direction;
clamping the yarn extending between the first pulling element and the creel;
selectively pulling all or part of said length of yarn by one of a plurality of yarn pullers during a time when the yarn extending to said tufting needle is clamped whereby different lengths of yarn can be selectively fed to said needle; and

releasing the yarn extending to said tufting needle to permit said selected length of yarn to be tufted by said tufting needle.

4,062,309
AUTOMATIC FEED DEVICE FOR SEWING MACHINE
Konrad Pollmeier, Bielefeld, and Franz Hannemann, Pivitsheide VH, both of Germany, assignors to Durkoppwerke GmbH, Bielefeld, Germany
Filed Nov. 14, 1975, Ser. No. 632,100
Claims priority, application Germany, Nov. 14, 1974, 2454030
Int. Cl.^{2} D05C *9/02*
U.S. Cl. 112—121.15 **8 Claims**

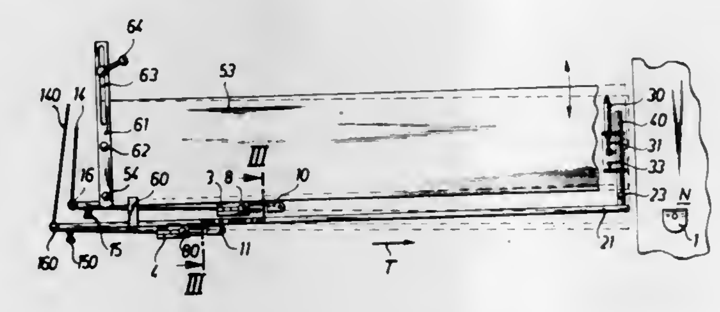

1. In combination with a sewing machine having means for advancing a workpiece to be stitched in a transport direction through a sewing station:
a pair of elongated tracks extending next to and spaced from each other parallel to said direction;
means for displacing said tracks transversely to said direction between a pair of end positions;
a clip displaceable along each of said tracks and having means defining a mouth open toward said station for gripping the trailing edge of a workpiece being advanced through said station;
means for urging each of said clips in a direction away from said station to hold workpieces engaged by said clips taut, said tracks having downstream ends adjacent said station and upstream ends remote from said station; and
an element connecting said tracks rigidly together at said upstream ends and provided with a pivot transverse to said direction, said means for displacing including an actuator engaging said downstream ends for swinging said tracks about said pivot, said tracks lying generally below a support plane, each of said clips comprising:
a support displaceable along the respective track,
a lower jaw pivoted on said support and having an upper face and displaceable between an operative position with said face generally parallel to and on said plane and a return position with said jaw below said plane,
an upper jaw pivoted on said support and having a lower face and displaceable between an open operative position with said upper jaw above said plane and said lower face spaced above said upper face, a closed operative position with said upper jaw above said plane and said lower face juxtaposed with and clamping a workpiece with said upper face, and a return position with said upper jaw below said plane,
means for displacing said upper jaw from said closed operative position into said open operative position on approaching a predetermined position adjacent said station for releasing said workpiece, and
means for displacing said upper and lower jaws into said return position on displacement of said support back away from said station.

4,062,310
COOLING DEVICE FOR SEWING MACHINES
Hermann Gauch, Moglingen, and Dieter Schopf, Gerlingen, both of Germany, assignors to Union Special G.m.b.H., Stuttgart, Germany
Filed July 28, 1976, Ser. No. 709,476
Claims priority, application Germany, Aug. 2, 1975, 2534568; June 6, 1976, 2627015
Int. Cl.^{2} D05B *71/00*
U.S. Cl. 112—280 **8 Claims**

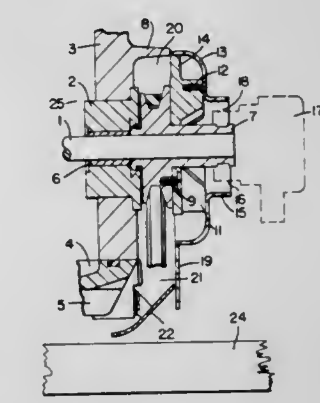

1. A cooling device for sewing machines having stitch forming instrumentalities defining a stitch forming area and a frame having a machine chamber means, said cooling device comprising:
a main drive shaft means mounted in said frame longitudinally thereof;
a drive pulley means mounted on said drive shaft means, including fan means formed as an integral part thereof;
handwheel means surrounding said fan means and fixedly secured thereto, said handwheel means having an inlet port;
shroud means secured to said frame, and associating with said frame and said handwheel means whereby forming an air chamber means; and
means for directing air discharged from said air chamber means along the bottom of said machine.

4,062,311
SYSTEM FOR FORMING AND TRIMMING OF TUBULAR ARTICLES
Joseph P. Zugcic, Morganville, and Kevin Whiting, Bridgewater, both of N.J., assignors to American Can Company, Greenwich, Conn.
Filed June 24, 1976, Ser. No. 699,596
Int. Cl.^{2} B21D *51/26*
U.S. Cl. 113—7 R **10 Claims**

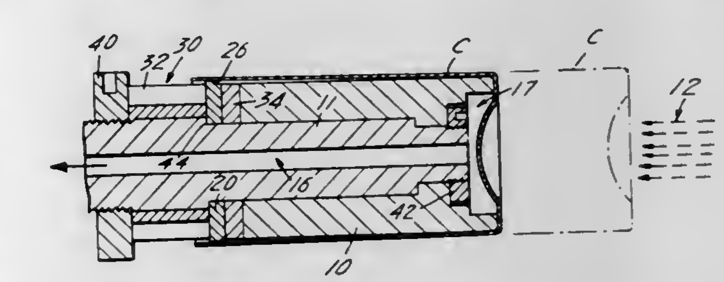

1. A system for the forming and trimming of a metal tubular article having an open end and a bottom end comprising, means for forming a tubular article comprising die means, punch means having a diameter operatively associated with said die means for urging metal through said die means to form said tubular article, means for operatively supporting said tubular article, means associated with said supporting means for holding said tubular article on said supporting means, means connected to said supporting means for rotating said supporting means and thereby said tubular article, first knife means having a diameter and operatively connected with said supporting means for trimming said open end of said tubular article when said tubular article is operatively supported by

said supporting means, second knife means associated with said first knife means and positioned to cooperate with said first knife means for said trimming, said diameter of said first knife means ranging from equal to that of the diameter of said punch means to less than 0.0015 inch shorter than said diameter of said punch means, and including means for transporting said tubular article from said die means to said supporting means.

4,062,312
METHOD FOR DEFORMING AND COATING A METALLIC SURFACE
Lewis T. Mason, Goshen, Ohio, assignor to Astro Containers, Inc., Evendale, Ohio
Filed May 6, 1976, Ser. No. 683,664
Int. Cl.² B21D *51/32, 51/20*
U.S. Cl. 113—120 A **10 Claims**

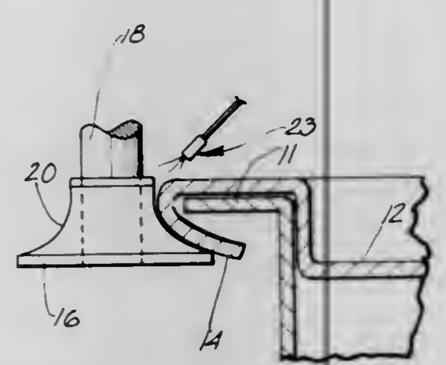

1. The improved metal deforming and coating process comprising the steps of:
a. lubricating the forming surface of a forming machine with a composition selected from the group consisting of methyl lactate, ethyl lactate, propyl lactate, butyl lactate, amyl lactate or mixtures thereof;
b. deforming a portion of a metallic surface by operation of said forming machine wherein the lubricated forming surface thereof contacts said portion of said metallic surface; and
c. applying a water-borne coating to said metallic surface including said portion thereof.

4,062,313
INSTALLATION OF VERTICALLY MOORED PLATFORMS
Edward M. Stram, San Rafael, Calif., assignor to Standard Oil Company (Indiana), Chicago, Ill.
Continuation of Ser. No. 616,697, Sept. 25, 1975, abandoned. This application Feb. 10, 1977, Ser. No. 767,587
Int. Cl.² B63B *35/44*
U.S. Cl. 114—265 **10 Claims**

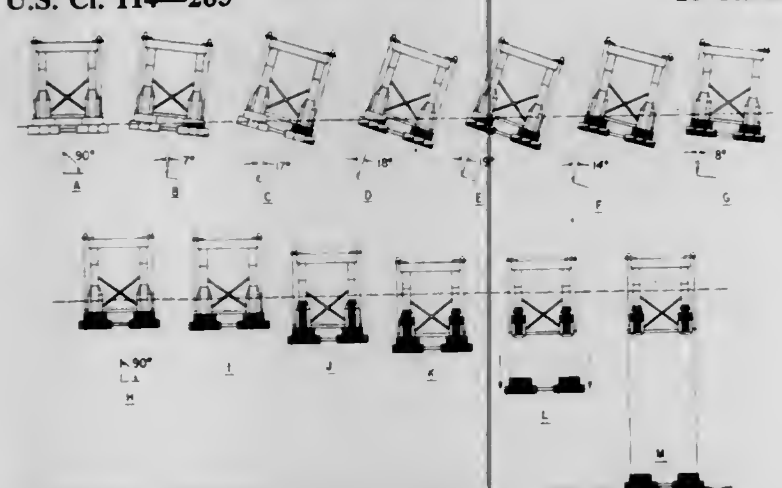

10. A method of installing a Vertically Moored Platform at a selected site in water, said platform having at least three buoyant legs positioned in a geometrical pattern which comprises:
a. setting each buoyant leg on one of a plurality of buoyant sections of a gravity base, the total buoyancy of the gravity base being sufficient to support said platform in water;
b. towing the platform and gravity base to the selected well site;
c. reducing the buoyancy of at least one gravity base section until the platform is tilted toward said at least one gravity base section while maintaining said gravity base in a buoyant condition completely above the bottom of said water;
d. thereafter and while said gravity base is still completely above bottom reducing the buoyancy of all sections until the center line of the platform is vertical; then simultaneously reducing the buoyancy of each said gravity base section in a manner to maintain the center line of the platform vertical until all buoyancy of each gravity base section has been removed and has a submerged weight;
e. then partially flooding the buoyant legs until an operating draft has been reached; and
f. thereafter lowering the gravity base of the bottom of the body of water and securing anchor elonated members between each lowered gravity base section and its respective buoyant leg.

4,062,314
MAGNETICALLY OPERATED WARNING DEVICE
Shelby A. Allen, Fairdale, Ky., and Neville R. Black, Louisville, Ky., assignors to Charles Nick Morris, Louisville, Ky.
Filed Sept. 20, 1976, Ser. No. 724,647
Int. Cl.² G08B *13/08*
U.S. Cl. 116—85 **13 Claims**

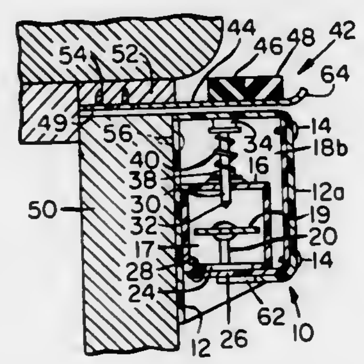

11. A sonic signaling device for use with a structure defined by a closure which is movably mounted within a frame comprising
means defining a housing for mounting on said closure for movement therewith,
a sonic generator mounted on said housing,
magnetized means for actuating said sonic generator movably mounted on said housing for linear translation relative to said housing in response to a magnetic force exerted thereon,
biasing means confined between said actuating means and housing tending to maintain said actuating means at an intermediate position of rest, such that said generator is inoperative,
first magnetic means for mounting on said frame for magnetically maintaining said actuating means in a retracted striking position away from said rest position to relax said biasing means when said closure is disposed with respect to a pre-selected position in said frame, and
second magnetic means for magnetically driving said actuating means to an advanced position to actuate said generator when said closure is moved with respect to said preselected position.

13. A sonic signaling device for use with a structure defined by a movable closure member mounted in a stationary frame member, said device comprising
a housing for mounting on one of said members,
a vibratile element mounted on said housing,
magnetized means for striking said element movably mounted on said housing,
biasing means confined between said striking means and said housing tending to maintain said striking means minimally spaced from said element, and
first magnetic means for mounting on the other of said members, for magnetically attracting said striking means away from said element to a retracted striking position maximally spaced from said element to relax said biasing means when said closure member is in a pre-selected position relative to said frame member, and
second magnetic means for mounting on the other of said members for repelling said striking means against said biasing means and element to produce a sonic vibration when said closure is moved away from said pre-selected position.

4,062,315
ADJUSTABLE LENGTH UNIVERSAL TUNING KNOB FOR T.V. RECEIVER
Robert C. Sickmen, 2432 E. Gate Drive, Silver Spring, Md. 20902
Filed Mar. 11, 1976, Ser. No. 665,911
Int. Cl.² H03J *1/02*
U.S. Cl. 116—124.2 A **1 Claim**

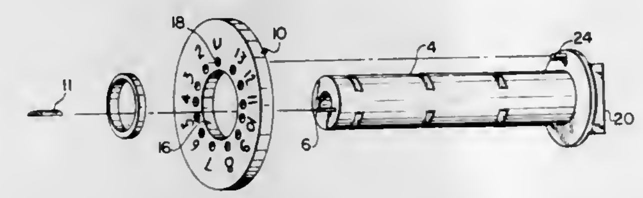

1. A control knob including means for indicating the position of a control shaft such as a television tuner, said knob comprising a sleeve and a base plate assembly including a base plate, said base plate being non-rotatably attached to said sleeve and concentric therewith; an indicator disc having position designating means inscribed thereon, said disc having a central aperture adapted to receive and slide along said sleeve to permit said disc to abut said base plate; a finger operable tongue attached to said base plate and projecting outwardly from said base plate in a direction opposite to that in which said sleeve projects; a projection extending outwardly from said base plate in the same direction as and parallel to said sleeve, said indicator disc having a plurality of angularly spaced apertures, any one of which is selectively engageable with said projection, said projection and said apertures constituting means for inter-engaging said indicator disc and said base plate only when said disc abuts against the base plate whereby said indicator disc may be rotated to a selected position with respect to said sleeve prior to its abutment with said base plate; and means engageable with said sleeve to retain said disc in abutment with said base plate, and said sleeve having weakened areas spaced axially therealong to facilitate breaking off and removal of portions thereof to selectively adjust the length thereof.

4,062,316
FLEXIBLE INSTRUMENT POINTER
Max Knobel, 453 Beacon St., Boston, Mass. 02115
Filed Oct. 4, 1976, Ser. No. 729,355
Int. Cl.² G01D *13/22, 13/26*
U.S. Cl. 116—136.5 **5 Claims**

1. A flexible pointer mountable to a movable member such as the shaft of a dial indicator or the like and arranged to contact at least one fixed element on the indicator, comprising
a. a hub adapted to be mounted to said member for movement therewith,
b. a pair of elongated legs connected at their inner ends to said hub in spaced opposing relation to one another,
c. said legs being of flat spring strip material and extending outwardly from said hub towards one another with a flat face of one leg being opposite a flat face of the other leg,
d. the outer ends of said legs being joined to one another and closer together than the spaced inner ends thereof to give a selected stiffness to the pointer,
e. the length of said elongated legs relative to the width of

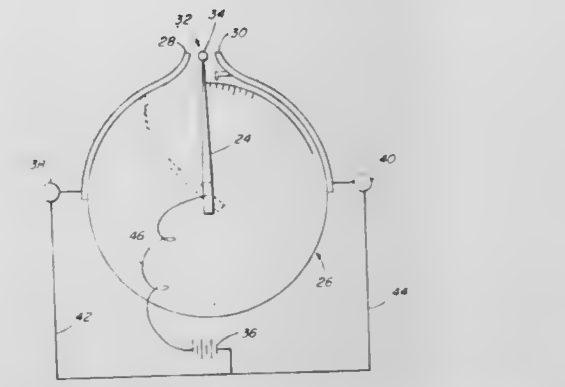

said spaced inner ends of the legs allowing extreme bending when the fixed element is engaged thereby wherein the pointer will resiliently return to its original shape when the pointer disengages the fixed element.

4,062,317
HANDBELL
Jacob H. Malta, Doylestown, Pa., assignor to Schulmerich Carillons, Inc., Sellersville, Pa.
Filed Mar. 11, 1976, Ser. No. 665,897
Int. Cl.² G10K *1/06, 1/36*
U.S. Cl. 116—171 **5 Claims**

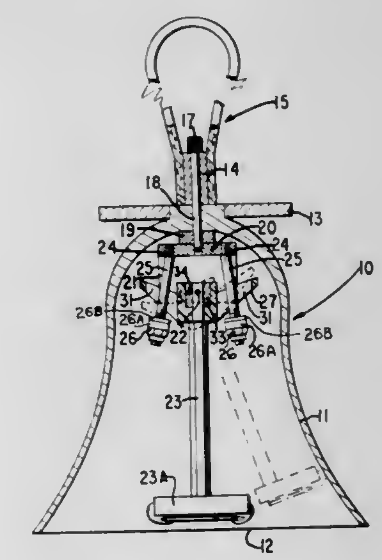

1. In a handbell, the combination including a bell, a handle attached to said bell, a member extending through said handle and bell, a clapper bar, yoke means attached to said extending member, for carrying said clapper bar within said bell, the clapper bar pivoted to said yoke means, a clapper attached to said clapper bar, and an elastomeric device secured to said yoke means and mounted on said clapper bar, said elastomeric device having means to restrain movement of said clapper bar relative to said bell.

4,062,318
APPARATUS FOR CHEMICAL VAPOR DEPOSITION
Vladimir Sinisa Ban, Hopewell, N.J., and Stephen Lee Gilbert, Concord, Vt., assignors to RCA Corporation, New York, N.Y.
Filed Nov. 19, 1976, Ser. No. 743,317
Int. Cl.² C23C *13/08*
U.S. Cl. 118—49 **10 Claims**

1. An apparatus for chemically vapor-depositing a material onto surfaces of a plurality of substrates within a reaction chamber comprising:
means positioned within said chamber for supporting said substrates in a stack-like relationship wherein said surfaces are substantially parallel to each other and are separated by spacings,

a plurality of gas nozzles connected to a source of gas and positioned within said chamber so that the flow of gas therefrom is directed respectively into said spacings be-

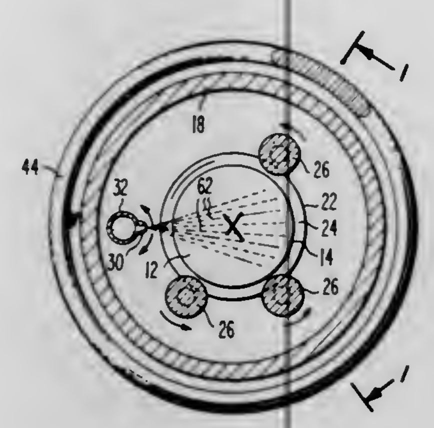

tween said surfaces, and and means for moving said nozzles so that the flow of said gas therefrom is directed into said spacings at different angles.

4,062,319
VACUUM TREATING APPARATUS
Marvin E. Roth, and Donald J. Vallere, both of Reading, Pa., assignors to Western Electric Co., Inc., New York, N.Y.
Division of Ser. No. 642,043, Dec. 18, 1975, Pat. No. 4,022,939. This application Jan. 10, 1977, Ser. No. 758,385
Int. Cl.² C23C *15/00, 13/02*
U.S. Cl. 118—49.1 **3 Claims**

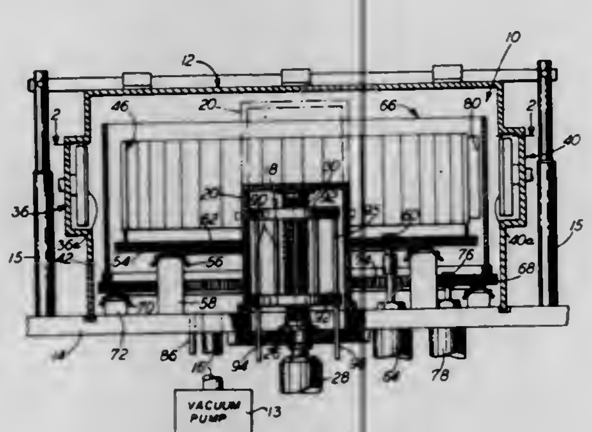

1. A vacuum treating apparatus comprising:
a treatment chamber;
a first pump disposed outside the chamber in communication therewith;
a second pump disposed centrally within said chamber;
means for selectively isolating said second pump from a portion of said chamber;
a work assembly, within said portion of the chamber, disposed in concentric surrounding relation with said second pump; and
a treating means, within said portion of the chamber, disposed radially outwardly of said work assembly.

4,062,320
WORK SUPPORTING MEMBERS FOR GLUE APPLYING MACHINES
John L. Mortoly, Poughkeepsie, N.Y., assignor to James L. Taylor Mfg. Co., Poughkeepsie, N.Y.
Filed Sept. 16, 1976, Ser. No. 723,755
Int. Cl.² B05C *1/02, 13/00*
U.S. Cl. 118—239 **2 Claims**

1. In a glue machine, the combination comprising an applicator for applying glue to work pieces, means for moving the work pieces to which glue has been applied, the work moving means including a pair of endless driven chains and work supporting members extending between and secured to the chains, the work supporting members being generally tubular in configuration and disposed for line contact with the work pieces, said work supporting members being circumferentially discontinuous between inwardly turned flange portions defining an open channel on the underside, and fastening means extending through links of the chains and channels of the work

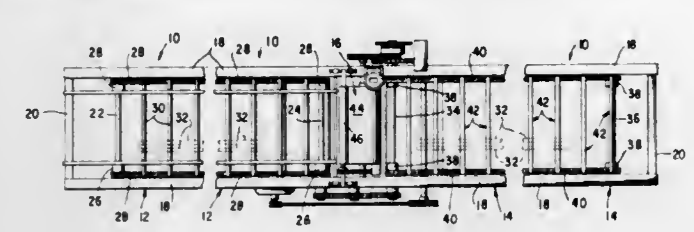

supporting members for securing the work supporting members to the chains, the fastening means including fastening members in engagement with inside surfaces of the tubular supporting members and cooperating fastening members in engagement with links of the chains.

4,062,321
FLUID SUPPORTED BELT ABOUT CYLINDRICAL MANDREL FOR TRANSPORTING MAGNETIC PARTICLES
Nelson L. Greenig, Norristown, Pa., assignor to Sperry Rand Corporation, New York, N.Y.
Filed Mar. 23, 1977, Ser. No. 780,637
Int. Cl.² B05C *5/02*
U.S. Cl. 118—623 **11 Claims**

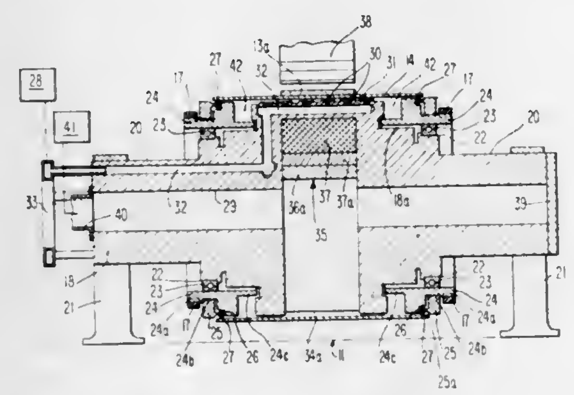

1. In magnetic particle transporting apparatus of the type in which an endless metal belt of relatively thin cross-section is passed across magnet means effective to form a non-translating, rotating elongate bead of magnetic particles across the direction of travel of said belt to distribute said particles in a uniform layer for removal from said belt in a transfer region, the combination of: a generally cylindrically shaped mandrel, rotatable means along edge regions of said belt for supporting said belt on said mandrel in the shape of a cylinder and providing for rotation of said belt about its axis of curvature; and means for introducing fluid under pressure in the region enclosed by said belt and said mandrel uniformly to urge said cylindrically formed belt outwardly, effectively rigidifying the same to maintain predetermined optimum spacing between said belt and said magnet means for the recited formation of said bead of particles.

4,062,322
GATE LOCKING MEANS
Peter G. Dormehl, 45, Regent Street, Yeoville, Johannesburg, Transvaal Province, South Africa
Filed Mar. 29, 1976, Ser. No. 671,491
Int. Cl.² A01K *1/02*
U.S. Cl. 119—27 **3 Claims**

1. In combination an animal head gate and frame assembly wherein the head gate is hingedly supported on hinges secured to the frame and cooperating formations on the edge of the head gate remote from the hinges and the adjacent portion of the frame, the formations being adapted to receive a locking

pin having an axis and upper and lower regions said pin having support means for supporting said pin on said formation on the adjacent portions of said frame, said support means being positioned in the upper region of said pin, said pin having a head end at the lower region of said pin, said head end comprising a first and second wall means vertically spaced apart along the axis of said pin for defining a groove therebetween, said hinges secured to said frame comprising vertically spaced

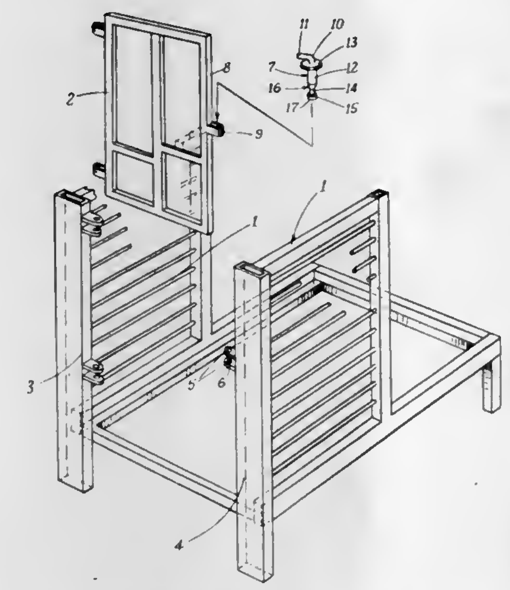

apart plates each having means defining a hole therein for receiving said pin, said groove being slightly wider than the distance said plates are spaced apart, said first wall means being formed at right angles to the axis of said pin, said second wall means being positioned between said first wall means and said support means and at an angle with the axis of said pin so that said second wall means diverges away from said first wall means.

4,062,323
PROTECTOR FOR THE UDDER OF A COW
Mansanori Miyazawa, 22-5, 2-chome, Ando, Shizuoka, Japan
Filed Aug. 20, 1976, Ser. No. 716,259
Claims priority, application Japan, Sept. 29, 1975, 50-133598[U]
Int. Cl.² A01K *29/00*
U.S. Cl. 119—146 **6 Claims**

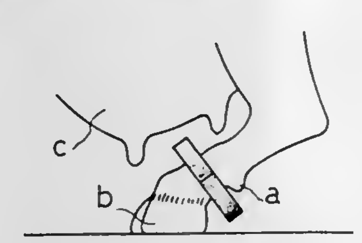

1. A combination of an udder protector composed of a cellular foamed synthetic resin elastic material, which has a side face of a relatively thick plate-like shape and a doughnut-like annular plane shape, one part of said annular protector being cut and separated in the radial direction and both the cut ends being pressed against each other so that they can be forcibly opened and separated from each other and the cow ankle can be inserted into the central hole of the annular protector from the side through a clearance formed between the cut ends, said protector having a diameter greater than the hoof of a cow and when applied to a cow adapted to engage the udder and prevent injury thereto by said hoof, with a connecting member comprising two arcuate plates disposed on both surfaces of the protector to cover said cut part of the protector, each arcuate plate including, on the face confronting the other arcuate plate, male and female projections which are inserted into holes formed in both the sides of the protector with the cut and separated part being the boundary and are engaged with female and male projections of the other arcuate plate, respectively.

4,062,324
FIRETUBE ECONOMIZER
William P. Manning, Tulsa, Okla., assignor to Combustion Engineering, Inc., Windsor, Conn.
Filed June 1, 1976, Ser. No. 691,748
Int. Cl.² F22B *7/06*
U.S. Cl. 122—145 **1 Claim**

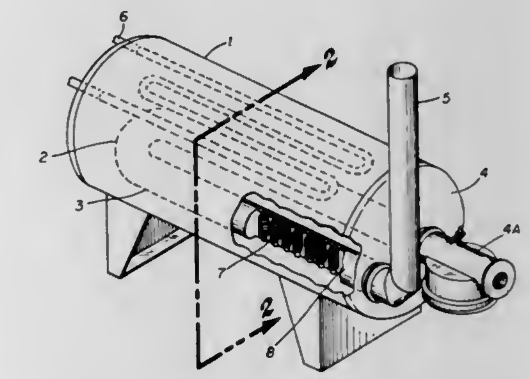

1. An indirect heater, including,
a container having a substantially horizontal chamber,
a body of liquid to be heated in the chamber,
a firetube in the form of a U-turn positioned within the chamber,
a burner mounted in a first end of the firetube to discharge products of combustion into the firetube,
a stack connected to the second end of the firetube and extending vertically upward to discharge the products of combustion from the firetube,
a plurality of aligned tubular members extended through the portion of the U-turn form of firetube which is closely adjacent the connection to the stack, each tubular member,
a. extended vertically through the firetube portion so as to be open to the body of liquid at both its ends and sealed to the walls of the firetube portion to contact the products of combustion with its external surface within the firetube portion, and
b. fins mounted on the external surface of the tubular members and in contact with the products of combustion,
the burner set to fire at the rate and the firetube sized and the number of tubular members fixed to provide a temperature for the products of combustion discharged from the stack in the range of 400° to 640° F and a GTE over 70%,
and a member to be heated mounted in the body of liquid above the firetube,
whereby as liquid of the body in the chamber is heated it flows upward to contact the member while cooler portions of the liquid below the firetube flow up through the tubular members as the liquid is heated in the tubular members.

4,062,325
BOILER USING COMBUSTIBLE FLUID
John G. Meier, San Diego, Calif., and Bernard Vollerin, Geneva, Switzerland, assignors to Pietro Fascione, Italy
Continuation-in-part of Ser. No. 628,148, Nov. 5, 1975, abandoned, which is a continuation of Ser. No. 485,639, July 3, 1974, abandoned. This application Oct. 8, 1976, Ser. No. 731,014
Claims priority, application Switzerland, July 11, 1973, 10085/73
Int. Cl.² F22B *7/00, 25/00*
U.S. Cl. 122—225 R **9 Claims**

1. A fluid fuel boiler comprising, a combustion chamber, a cover on said combustion chamber having an opening for introducing a combustion supporting gaseous fluid through

said opening, a burner for introducing a fluid fuel into the chamber mixed with said gaseous fluid for combustion thereof, water-heating means defining a plurality of water flow paths circumferentially and axially of said combustion chamber, means defining a plurality of axial hot gas flow paths from a

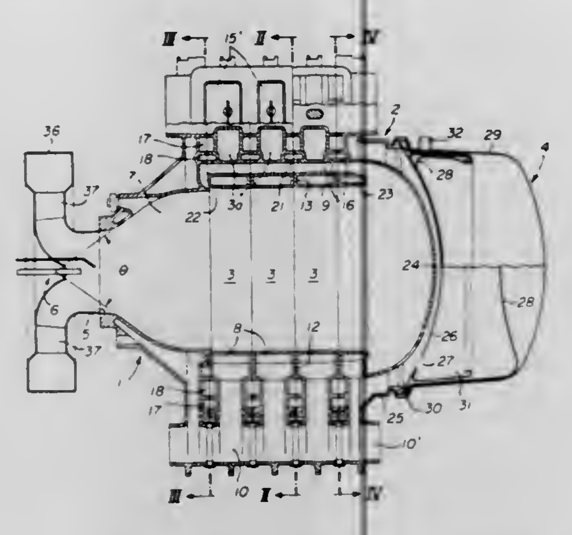

downstream portion of said combustion chamber, and means defining a plurality of nozzles for diverting some of said hot gas flow along axially spaced paths in a direction circumferentially of said combustion chamber, and said latter paths being immersed in the flow paths of said water thereby to improve heat transfer.

4,062,326
ROTARY ENGINE WITH ROTARY INTAKE VALVE
Charles Jones, Hillsdale, N.J., assignor to Curtiss-Wright Corporation, Wood-Ridge, N.J.
Filed Dec. 2, 1976, Ser. No. 747,016
Int. Cl.² F02B *33/10*
U.S. Cl. 123—8.09 **11 Claims**

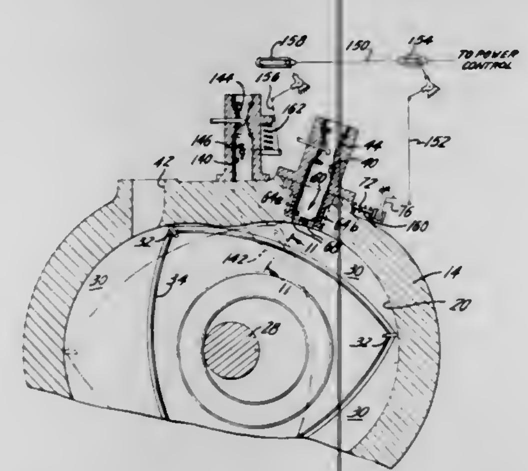

1. A rotary intake throttle valve configuration for a rotary internal combustion engine having an outer housing body with an internal cavity, the peripheral surface of which has a multilobe profile and with said outer body having an intake passage and an exhaust passage opening into said cavity and said engine also having an inner body of generally polygonal profile mounted for relative rotation within said outer body cavity with the apex portions of the inner body having sealing cooperation with said peripheral surface to define a plurality of working chambers which cyclically vary in volume in response to said relative rotation, said intake throttle valve configuration comprising:
a. said intake passage having a partition at its downstream end and disposed thereacross substantially flush with the surface of said engine cavity and having at least one opening therethrough constituting intake port means;
b. a rotatable throttle valve member in said intake passage and having a portion disposed adjacent to and against said intake passage partition with its axis of rotation being substantially normal to the inner surface of said partition, said valve member being arranged for cooperation with the intake port means of said partition such that the effective intake port flow area provided by said rotatable valve member varies with the rotative position of said valve member; and
c. means operatively connected to said rotatable valve member for connection to the engine power control for varying the rotative position of said valve member thereby to vary the engine power output.

4,062,327
INTERNAL COMBUSTION ENGINE
Peter Brian Knights, 8 Malwood Road West, Hythe, Southampton, England
Filed Sept. 4, 1975, Ser. No. 610,375
Claims priority, application United Kingdom, Sept. 11, 1974, 39661/74
Int. Cl.² F02D *19/00*
U.S. Cl. 123—25 R **10 Claims**

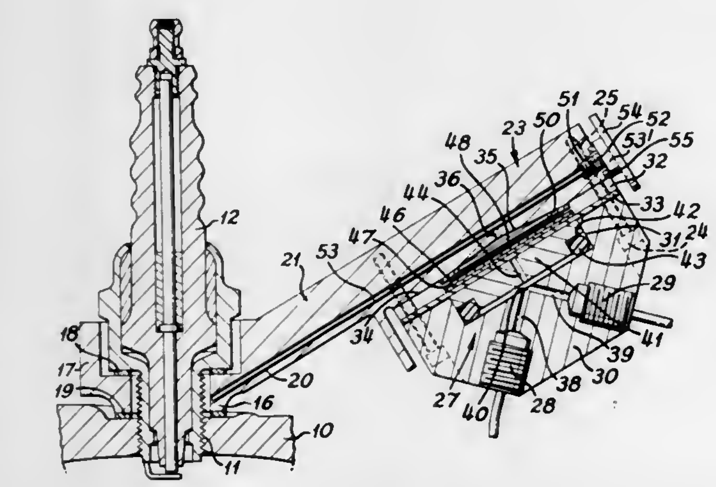

1. An internal combustion engine having means for feeding fuel into each combustion chamber of said engine and apparatus for the introduction of fluids other than fuel into an air inlet passage of said engine, which apparatus comprises:
a supply of fluid other than fuel;
injection means for injecting said fluid into said air inlet passage of said engine prior to entering a combustion chamber of said engine;
means for sensing pressure variations in at least one combustion chamber of said engine;
a pump communicating with and responsive to said sensing means for delivering varying amounts of fluid from said fluid supply to said injection means, said amount of fluid being determined by the pressure in said at least one combustion chamber such that the amount of fluid supplied by said apparatus to said air inlet passage varies as a function of the pressure in said at least one combustion chamber of said engine.

4,062,328
ELECTRICALLY CONTROLLED FUEL INJECTION SYSTEM
Mitsutaka Konno, No. 2-12-102, Asahi, Yokohama, Japan
Filed Aug. 29, 1975, Ser. No. 609,064
Claims priority, application Japan, Sept. 5, 1974, 49-102239
Int. Cl.² F02B *3/00, 77/00*
U.S. Cl. 123—32 EL **4 Claims**

1. An arrangement for use with an electrically controlled fuel injection system for an internal combustion engine of a vehicle, the system comprising an air-flow meter operatively attached to an intake manifold for sensing the amount of air flowing therethrough and an electrical switch attached to a throttle for sensing the degree of the throttle opening and a computer, the computer electrically controlling the quantity of fuel injected into cylinders of the engine and also fuel injection timing in accordance with the amount of the air and the engine

speed derived from a distributor, the system ceasing the injecting of fuel when the engine speed is above a predetermined value and at the same time the degree of the opening of the throttle is below a predetermined value,

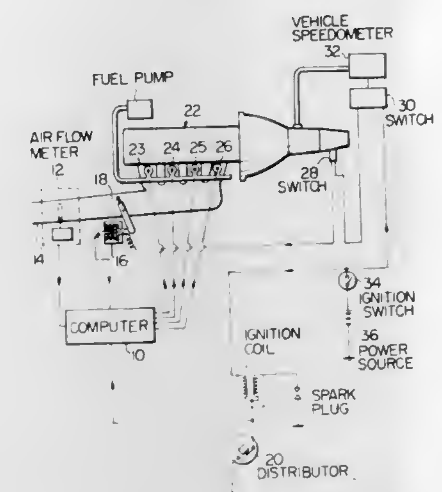

wherein the improvement comprises,
means electrically connected to the system for preventing the ceasing of fuel injection with th vehicle speed falls below a predetermined level.

4,062,329
FAN DRIVE SYSTEM
Russell L. Rio, Dalton, Mass., assignor to The United States of America as represented by the Secretary of the Army, Washington, D.C.
Filed July 29, 1976, Ser. No. 709,839
Int. Cl.² F01P *7/02*
U.S. Cl. 123—41.12 **4 Claims**

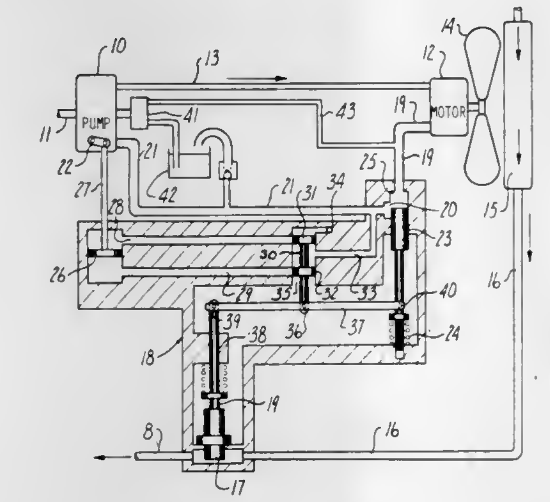

1. In an engine cooling system that includes a fan for cooling the engine coolant:
means for driving the fan at variable speed, comprising a hydrostatic transmission that includes a variable displacement pump **(10)** driven by the engine to produce a hydraulic output **13**, a fixed displacement fan motor **(12)** receiving the pump output **(13)**, and a hydraulic return line (at **19,21**) interconnecting the motor and pump; control means for the aforementioned driving means, comprising first thermostatic means **(17)** responsive to engine temperature for developing a first positive control signal (at **39**), a flow-responsive element **(23)** arranged in the aforementioned hydraulic return line for developing a second negative control signal (at **40**), comparator means **(37)** receiving the first and second signals, said comparator means producing an output signal (at **36**) representing the differential between the first and second signals, and means for applying said output signal to the aforementioned pump **(10)** to vary its displacement, whereby said motor **(12)** drives the fan at varying speeds sufficient to maintain a substantially uniform engine temperature under a range of operating conditions;
a second engine-driven make-up pump **(41)** having a relatively small output that is directly related to engine speed, and conduit means **(43)** directing the pump **(41)** output to the aforementioned return line at a point upstream from the aforementioned flow-responsive element **(23)**, whereby said element **(23)** produces a signal that is related both to fan motor speed and engine speed.

4,062,330
ROTARY ENGINE INTAKE AND EXHAUST SYSTEM
Roger Evan Billings, Provo, Utah, assignor to Billings Energy Corporation, Provo, Utah
Filed July 3, 1975, Ser. No. 593,004
Int. Cl.² F02B *57/06*
U.S. Cl. 123—44 R **8 Claims**

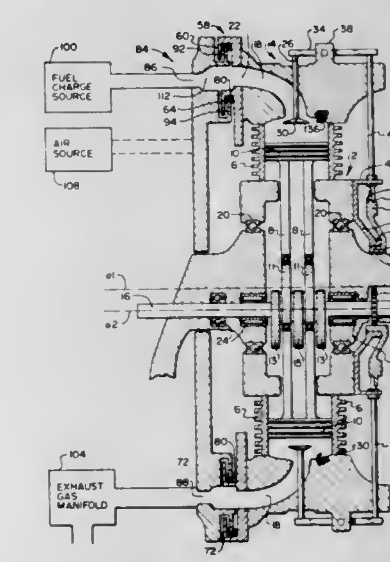

1. An intake/exhaust system or a rotary engine which includes a rotatable cylinder unit having a plurality of cylinders defined therein, said system comprising
means defining a plurality of cylinder ports in said cylinder unit and a plurality of passages for enabling communication between each of said ports and a different one of said cylinders, said ports arranged to travel in a generally circular path as the cylinder unit is rotated,
control means carried by the cylinder unit for allowing or inhibiting communication between the cylinder ports and corresponding cylinders, and
means defining an intake port, an exhaust port, and a buffer port disposed between the intake port and the exhaust port, said ports being disposed adjacent the path traveled by said cylinder ports, said intake port being aligned with successive ones of said cylinder ports as the cylinder unit is rotated to supply fuel charges to the cylinder ports, said exhaust port being aligned with successive ones of said cylinder ports as the cylinder unit is rotated to receive exhaust products from the cylinder ports, and said buffer port being aligned with successive ones of said cylinder ports as the cylinder unit is rotated to supply air to said cylinder ports following intake of fuel charges.

4,062,331
TWO CYCLE INTERNAL COMBUSTION ENGINE
Eyvind Boyeson, Kempton, Pa., assignor to Performance Industries, Inc., Kempton, Pa.
Continuation-in-part of Ser. No. 586,138, June 11, 1975, which is a continuation-in-part of Ser. No. 375,065, June 29, 1973, Pat. No. 3,905,340, which is a continuation-in-part of Ser. No. 361,407, May 8, 1973, abandoned, which is a continuation-in-part of Ser. No. 282,734, Aug. 22, 1972, abandoned. This application Apr. 6, 1976, Ser. No. 674,102
Int. Cl.² F02B *33/04*
U.S. Cl. 123—73 B **21 Claims**

1. A variable speed, two-cycle crankcase compression, inter-

nal combustion engine, comprising: engine housing structure including a cylinder and a crankcase, a skirted piston mounted for reciprocation in the cylinder between top and bottom dead center positions; at least one transfer passage in communication with the crankcase and having an opening through the cylinder wall for supplying, to the combustion side of the piston, fluid compressed in the crankcase during movement of the piston toward its bottom dead center position; a fuel intake chamber for receiving fuel from a supply source, and having intake porting in the housing structure positioned to deliver fuel to the space below the piston including the crankcase, said intake porting including portions configured and positioned to provide for introduction of fuel beneath the piston and into said space independently of the transfer passage throughout

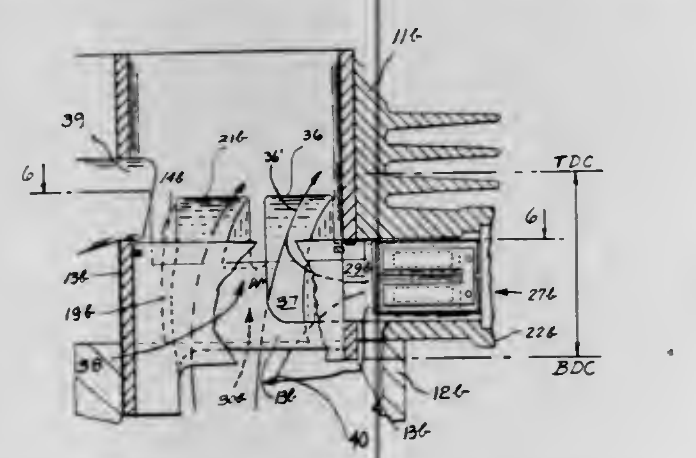

the entire upward stroke of the piston, from substantially the bottom dead center position to substantially the top dead center position thereof; reed valve means for controlling the flow of fluid through the intake chamber and substantially preventing flow of fluid back toward such supply source during downward movement of the piston toward its bottom dead center position; and injector passage means responsive to the flow of compressed fluid through said transfer passage to draw fluid from the intake chamber and supply it to said transfer passage, and directly to the combustion side of the piston without compression of the latter fluid in the crankcase, said injector passage means having porting communicating with said transfer passage and having other porting communicating with said intake chamber downstream of said reed valve means.

4,062,332

COMPRESSION BRAKE FOR INTERNAL COMBUSTION ENGINE

Julius P. Perr, Columbus, Ind., assignor to Cummins Engine Company, Inc., Columbus, Ind.

Filed Nov. 28, 1975, Ser. No. 635,827

Int. Cl.² F02D *9/66*

U.S. Cl. 123—97 B **8 Claims**

1. A compression brake for a reciprocating rotary output multistroke internal combustion engine which pumps gas from a combustion chamber through an exhaust system during one of said strokes, said brake comprising:

a housing interposed in said exhaust system and having a flow path therethrough for gases of said engine;

a gate valve element in said housing displaceable in a direction substantially perpendicular to the direction of gas flow through said housing between a first position in which it blocks flow through said housing thereby creating a substantial back pressure on said engine for retarding its rotation and a second position in which flow is freely permitted;

a movable element for displacing said valve element between said first and second positions;

said gate valve element having at least one port therethrough, said port being exposed to said flow path when said valve element is in said first position, said port having a flow area substantially less than that for the housing flow path,

displaceable valve means actuated by said movable element to block flow through said port when said element displaces said valve element toward said first position and to permit flow through said port prior to displacement of said gate valve element toward said second position

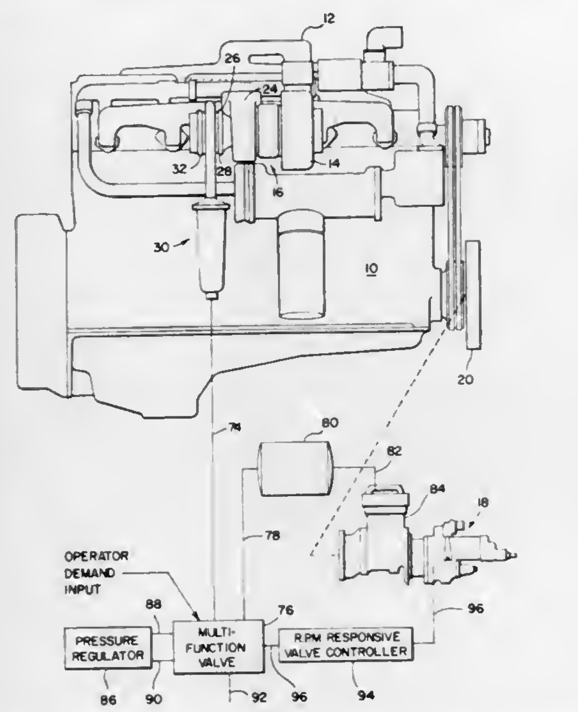

thereby initially reducing back pressure upstream of said valve element sufficiently to minimize friction forces holding said valve in its first position.

4,062,333

SUPERCHARGED INTERNAL COMBUSTION ENGINE

Minoru Matsuda, Chofu; Junji Otani, Omiya; Kenzo Kaji, Ooi, and Masanori Masumura, Sayama, all of Japan, assignors to Honda Giken Kogyo Kabushiki Kaisha, Tokyo, Japan

Filed Mar. 24, 1976, Ser. No. 669,907

Claims priority, application Japan, Mar. 26, 1975, 50-39355[U]

Int. Cl.² F02B *33/00*

U.S. Cl. 123—119 C **10 Claims**

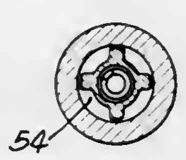

1. Supercharger apparatus for use with an internal combustion piston engine having a valved intake passage communicating with a combustion chamber, comprising, in combination: a rotary supercharger of the positive displacement substantially continuous flow type, mechanical means for driving the supercharger from the engine to rotate substantially in proportion to the engine speed, a power control valve positioned upstream from said supercharger for controlling the flow of air-fuel mixture to said supercharger, a secondary valve operatively positioned between the supercharger and said valved intake passage of the engine, means coordinating the operation of said secondary valve and said power control valve so that the secondary valve remains in idle position when the engine is idling but remains in open position during all other engine operating conditions, said coordinating means including a vacuum device for operating said secondary valve, and means for connecting the vacuum device to an intake passage upstream from said supercharger.

4,062,334

FUEL SYSTEM OF INTERNAL COMBUSTION ENGINE

Tadahide Toda, and Toshiaki Konomi, both of Susono, Japan, assignors to Toyota Jidosha Kogyo Kabushiki Kaisha, Toyota, Japan

Filed June 21, 1974, Ser. No. 481,505

Claims priority, application Japan, July 20, 1973, 48-80674

Int. Cl.² F02M *31/00*

U.S. Cl. 123—122 AB **4 Claims**

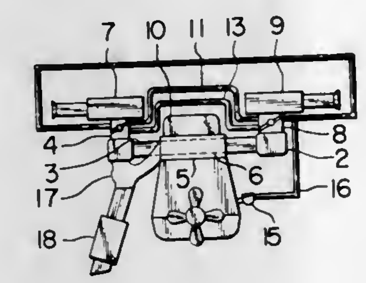

1. In an internal combustion engine having a housing which includes a cylinder head, an exhaust manifold positioned adjacent one side of the engine housing, and an intake manifold spaced from said exhaust manifold and positioned adjacent the other side of said engine housing, comprising the improvement wherein a first carburetor is provided on one side of the engine directly adjacent the exhaust manifold, an intake passage connected between the outlet of said first carburetor and said intake manifold, said intake passage having a first part thereof disposed on said one side of the engine and at least partially covered by said exhaust manifold to create a hot spot so that the fuel-air mixture from the first carburetor is heated by the waste heat from the exhaust gases in the exhaust manifold, said intake passage also having a second part extending between said first part and said intake manifold, said second part being disposed within and extending across said cylinder head for permitting additional heating of the fuel-air mixture from the first carburetor by the waste heat from the cylinder head prior to said mixture being introduced into the intake manifold, a second carburetor provided on the other side of the engine in widely spaced relationship from both said first carburetor and said exhaust manifold, said second carburetor being positioned directly adjacent and having the discharge thereof connected to the intake manifold for supplying a cool fuel-air mixture thereto, and control means for interlocked operation of the throttle valves associated with the first and second carburetors, said control means being operable only subsequent to the opening of the throttle valve associated with the first carburetor.

4,062,335

VARIABLE VOLUME PUMP FOR INTERNAL COMBUSTION ENGINE

William J. Rank, 1704 E. 58th St., Minneapolis, Minn. 55417

Division of Ser. No. 475,392, June 3, 1974, abandoned, which is a continuation-in-part of Ser. No. 234,424, March 13, 1972, abandoned, which is a division of Ser. No. 41,320, May 28, 1970, Pat. No. 3,648,669. This application Sept. 25, 1975, Ser. No. 616,591

Int. Cl.² F02M *39/00;* F02D *1/02*

U.S. Cl. 123—139 AP **31 Claims**

1. A pump for use with an internal combustion engine having at least one cylinder, injector nozzle means for injecting fuel under pressure into the cylinder, said pump comprising: housing means having a chamber, a piston reciprocal in said chamber, oppositely acting check valves located in a passage in the housing providing an inlet and an outlet into said chamber whereby movement of said piston in one direction will draw fuel into said chamber at a relatively low pressure and movement of said piston in the other direction will pressurize the fuel and exhaust it through said outlet valve at a substantially greater pressure to the injector nozzle means, and means operable to reciprocate said piston through one stroke during each cycle of the engine cylinder, said means to reciprocate said piston including a lever extended generally normal to the direction of movement of said piston, said lever having transverse pivot means secured to the lever intermediate the ends of the lever, support means engageable with the pivot means to support the lever, said pivot means being movable with the lever relative to the support means in the direction of the longitudinal extent of the lever, said lever having one end portion slidably engageable with the piston, means slidably engageable with the other end portion of the lever operable to pivot the lever about the transverse axis of the pivot means to

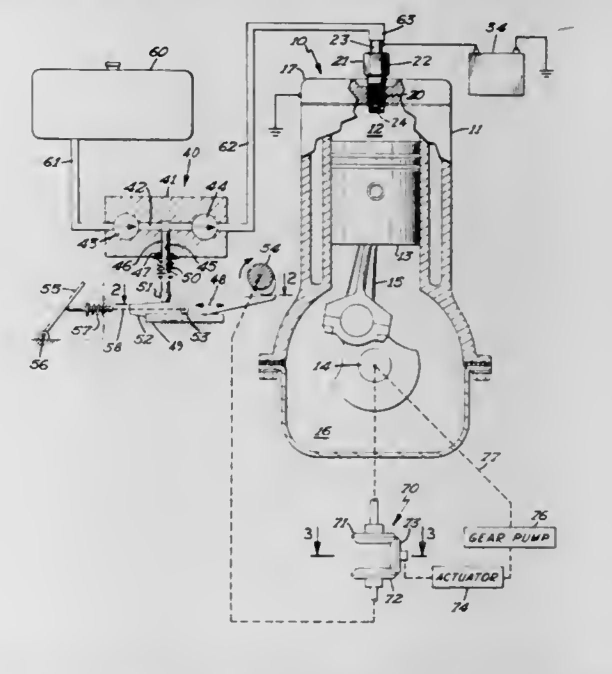

reciprocate said piston, means for linearly moving said lever in the direction of the longitudinal extent of the lever relative to the support means to change the relative distances between the pivot means and piston and pivot means and means operable to pivot the lever to thereby change the amount of reciprocal motion of the piston to vary the amount of fuel supplied to the nozzle means, means drivably connecting said means operable to pivot the lever to the engine, and means responsive to the speed of the engine to vary the phase relationship between said means operable to pivot the lever and the engine, independent of the means for linearly moving said lever.

4,062,336

FUEL CONTROL VALVE

Gary L. Gant, Columbus; Michael D. Breeden, Columbus; James A. Sting, Columbus, and Edward D. Smith, Greensburg, all of Ind., assignors to Cummins Engine Company, Inc., Columbus, Ind.

Filed May 19, 1975, Ser. No. 578,927

Int. Cl.² F02M *39/00*

U.S. Cl. 123—139 AF **7 Claims**

1. A pressure responsive control valve for a fuel system supplying fuel at a variable pressure to an internal combustion engine, said valve comprising:

a housing having a cylindrical chamber therein and an inlet extending from one end of said cylindrical chamber to the variable pressure output of said fuel system, said housing means having a bypass outlet connected to a low pressure section of said fuel system;

a cylindrical element having a conical elastomeric tip displaceable axially in said chamber from a first position in which the conical tip seats against said inlet to prevent flow through said chamber and a second position in which it permits flow therethrough, said valve element being urged toward said second position by the fuel pressure of said system, the area of said inlet being a given ratio less than the cross sectional area of said chamber taken in a plane at a right angle to the direction of travel of said valve element thereby permitting the area of the valve element exposed to fuel system pressure to vary from a first area when the valve element is in said first position to

a second and substantially larger area when said valve is in said second position;

a spring acting on said valve element;

a plug threaded into the end of said housing and forming the end of said chamber opposite the inlet end, whereby said spring abuts said plug, said plug being rotatable to vary axial position of one end of said spring and thus vary the force it applies to said valve element, said plug having an elastomeric pad positioned in the threaded section thereof for restraining said plug in a selected position thereby varying the pressure at which fuel is bypassed;

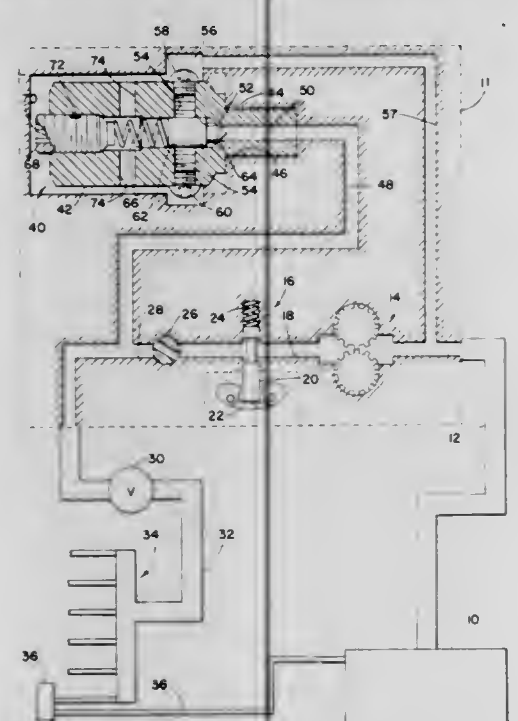

means defining a predetermined orifice removably interposed in said bypass outlet for providing a predetermined restriction to flow,

whereby when the pressure in said fuel system exceeds a given first level said valve bypasses flow to reduce the pressure thereof, said valve requiring the fuel system pressure to drop to a second level below said first level before bypass flow is terminated and the output pressure of said fuel system is varied through a range of pressures intermediate said first and second levels.

4,062,337

ELECTRO-PNEUMATIC DEVICE FOR REGULATING THE SUPPLY OF AIR TO AN INTERNAL COMBUSTION ENGINE

Jean-Pierre Rivere, Paris, France, assignor to Regie Nationale des Usines Renault, Boulogne-Billancourt and Automobiles Peugeot, Paris, both of, France

Filed Sept. 12, 1975, Ser. No. 612,721

Claims priority, application France, Sept. 26, 1974, 74.32501

Int. Cl.² F02D *1/04*; F01N *3/00*

U.S. Cl. 123—140 MC **16 Claims**

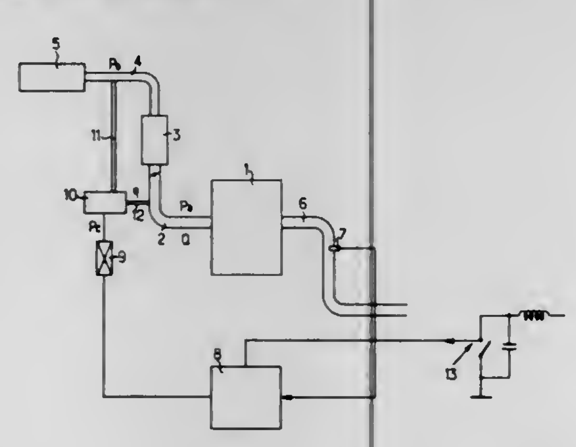

12. In an electro-pneumatic device for controlling the supply of additional air to an internal combustion engine to regulate the richness of the combustible mixture in said engine, said device including a suction-controlled valve, an electrically-operated valve operatively connected to said suction-controlled valve, a sensor for sensing the composition of exhaust gases from said engine, and an electronic device, which is responsive to engine speed and to signals from said sensor, operatively connected to said electrically-operated valve, said suction-controlled valve being arranged to deliver extra air at predetermined rates of flow to said engine downstream of a carburettor of said engine, the improvement wherein said electro-pneumatic device further comprises:

a. pneumatic regulator valve means comprising part of said suction-controlled valve, for decreasing air pressure in an upstream stage from substantially atmospheric pressure, at which air enters said suction-controlled valve, to an intermediate lower pressure, and for decreasing pressure in a downstream stage from said intermediate pressure to a mixture delivery pressure at which a combustible mixture is aspirated by said engine, said valve means including at each said stage a slide valve and at least one diaphragm actuating said slide valve, said valve means regulating the flow to said downstream stage to provide a flow therethrough proportional to the difference between a command pressure and said mixture delivery pressure, said valve means also, at said upstream stage, controlling the difference between said intermediate pressure and said mixture delivery pressure so that it is proportional to said mixture delivery pressure;

b. a command valve system comprising part of said electrically-operated valve including means for generating said command pressure including a chamber having first passage means connected with a source pressure no less than said intermediate pressure and no greater than atmospheric pressure, second passage means connected with a source of said mixture delivery pressure, and valve means alternately connecting said chamber to said first passage means only for a first period and during a second period to said second passage means; and

c. said electronic device comprising means for producing an electric signal having a square wave form and for applying said signal to said command valve system to control said command signal, said signal having a square wave form, the mark/space ratio of which is constant, the mark period being a function of the speed of said engine as indicated by the ignition frequency of said engine and a function of a signal delivered by said exhaust gas composition sensor, said function being such that the rate of flow of said additional air supply from said suction-controlled valve is at least substantially proportional to the rate of flow of a main stream of air aspirated by said engine, said mark/space ratio and satisfying the requirements (1) that each mark period be less than the time taken for said chamber in which said command pressure is operated to fill completely or empty completely and (2) that emptying preponderates over filling.

4,062,338

STEAM COOLING SYSTEM FOR INTERNAL COMBUSTION ENGINES

Jozsef Toth, Miskolc, Hungary, assignor to Energiagazdalkodasi Intezet, Budapest, Hungary

Filed Apr. 16, 1976, Ser. No. 677,739

Int. Cl.² F02D *19/00*

U.S. Cl. 123—25 C **6 Claims**

1. In an internal combustion engine, especially a two-stroke internal diesel engine, having a piston, a cover, fuel injection means in said cover and a cylinder space: a cooling device comprising an annular movable plate confining in part said cylinder space and located substantially opposite said piston, said annular movable plate surrounding said fuel injection means, a plurality of recesses substantially uniformly spaced in said movable plate around said fuel injection means, a plurality

of pistons mounted in said cover and fitted into said recesses respectively, a bore in each of said pistons, a channel in said cover for distributing cooling water, the end of each of said bores remote from said cylinder space being connected to said channel, check valve means for closing the other end of each bore adjacent said space, said check valve means including a spring and a ball, an injection bore of reduced diameter connecting the recesses formed in said movable plate to the cylinder space, springs arranged between said movable plate and

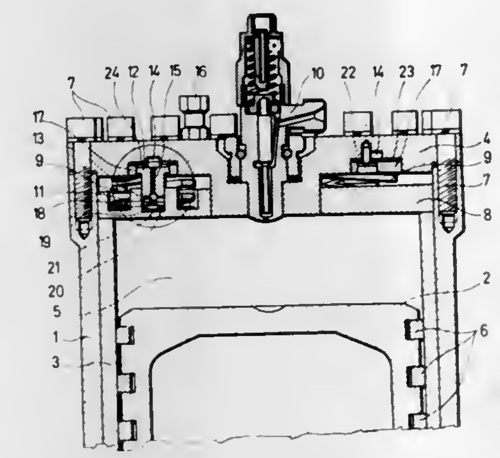

said cover and being pre-stressed such that displacement of the movable plate toward said cover will take place only when the gas pressure in said cylinder space surpasses the critical pressure of water vapor of approximately 225 atmospheres during combustion of the fuel in said cylinder space, said pistons pressing water from the recesses in the movable plate under high pressure surpassing 1000 atmospheres through said injection bores into the cylinder space, whereby the water while passing through said injection bores evaporates in an explosion-like manner.

4,062,339

BOWSTRING DRAW AND RELEASE MECHANISM

Hugh R. Wilson, 10840 S.W. 120th St., Miami, Fla. 33176

Filed Feb. 17, 1976, Ser. No. 658,837

Int. Cl.² F41B *5/00*

U.S. Cl. 124—35 A **7 Claims**

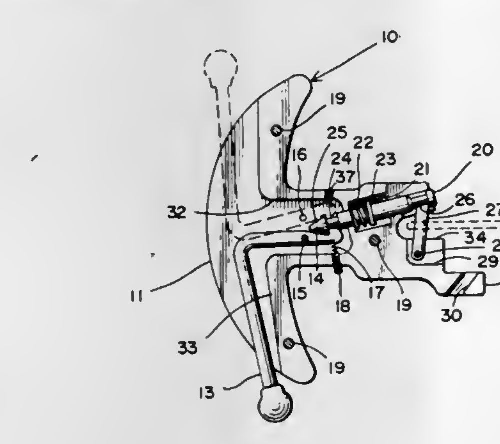

1. A bowstring holding and release mechanism comprising a holding and release means for releasably engaging a bowstring, said holding and release means comprising a swinging holding member for movement between first and second position for holding and releasing a bowstring, respectively,

retaining plunger means slideably mounted on said holding and release means and engaging a first end portion of said holding member to retain said holding member in said first position when said retaining plunger is in a first position,

triggering means engaging a first end portion of said retaining plunger means to retain said retaining plunger means in a first position when said triggering means is in a first pivoted position,

said triggering means being pivotably moveable to a second position out of engagement with said end portion of said retaining plunger means to permit said retaining plunger means to slide to a second position out of engagement with said first end portion of said holding member to permit said holding member to swing to said second position for releasing a bowstring,

said holding member when manually moved to said first position being engaged by said retaining plunger means and said retaining plunger means being engaged by said triggering means,

spring means for holding said triggering means in said first position and for automatically returning said triggering means back to said first position after having been moved from a first position to a second position, an additional spring means for urging said retaining plunger toward said second position after having been moved from a second position to said first position,

whereby said retaining plunger means holds said holding member in a first position when said retaining plunger means and said triggering means are in a first position and said bowstring is tensed and when said triggering means is moved to said second position said retaining plunger and said holding member move to said second position and said bowstring moves to a released position.

4,062,340

OUTDOOR GRILL

George L. Huff, Greenville, Tenn., assignor to Metals Engineering Incorporated, Greenville, Tenn.

Filed Sept. 2, 1976, Ser. No. 719,936

Int. Cl.² A47J *37/00*; F24B *3/00*

U.S. Cl. 126—25 R **9 Claims**

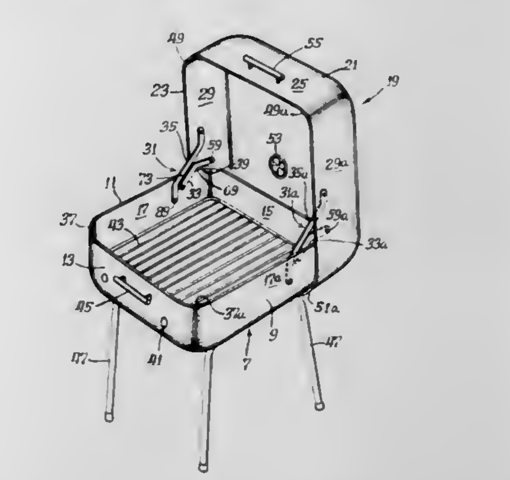

1. In a barbecue grill which includes a grill bowl section which is substantially rectangular in outline, having a front, a rear and two sides, and which has an upstanding flange around its periphery, a mating cover section for said grill bowl having a depending flange around its periphery and hinge means for pivoting said cover relative to said grill bowl, the improvement comprising hinge means which include two spaced apart hinge member sets, one of such sets being associated with each of said sides of said upstanding flange, each of said hinge member sets including an elongated first hinge member, including two integral ends and an upper and lower surface and having one end portion pivotally attached to the associated side of said upstanding flange and the other end portion pivotally attached to the mating side of the depending flange, the lower edge of said first hinge member bearing upon the upper surface of said upstanding flange when the cover is in the fully open position and the rearward end of said cover is below the level of the upper surface of said upstanding flange, the upper surface of said first hinge member being provided with a generally planar section, an elongated second hinge member including opposite integral end portions, an intermediate portion and an upper surface and a lower surface, having one of its end portions pivotally attached to said associated upstanding flange and its other end portion attached to said depending flange, and pivotal attachment means connecting said hinge members to their respective flange members, the points of pivotal attachment

being positioned so that said intermediate portion of said second hinge member bears upon said generally planar section of said first hinge member when said cover is in the fully opened position, the lengths of said hinge members and the positions of said pivot points being such that the flanges of the grill base section and the cover section mate when the cover is in the fully closed position.

4,062,341
PATIO WOK STOVE
John M. Panzarella, 91 E. Jerge Drive, Elma, N.Y. 14059
Filed Aug. 26, 1976, Ser. No. 717,899
Int. Cl.² A47J *37/00;* **F24C** *3/00*
U.S. Cl. 126—41 R 18 Claims

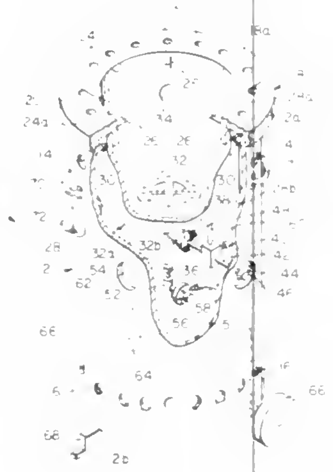

1. A portable, gas fired stove adapted particularly for heating a Wok including a vertically mounted outer cylinder having the upper end open, an annular collar adapted to detachably mount on the open end of said outer cylinder, said collar being formed with a relatively large aperture, a heating chamber generally of cylindrical shape and positioned within the interior of said outer cylinder, said heating chamber having one end open, the open end of said heating chamber being sized substantially complementary to said collar aperture and substantially axially aligned therewith, said heating chamber being detachably carried by said collar in such manner as to depend into the interior of said outer cylinder with the open end of said heating chamber being substantially in the plane of said collar, burner means mounted in said heating chamber such that the last-mentioned means is spaced from said collar aperture and substantially axially aligned therewith, and means for supporting the Wok substantially in alignment with said collar aperture and spaced therefrom whereby the high temperature gas exiting therethrough evenly heats the Wok bottom.

4,062,342
ANTI POLLUTION INSERT
Bernard A. Swanson, 11805 SE. 54th Place, Bellevue, Wash. 98006
Filed Feb. 19, 1976, Ser. No. 659,488
Int. Cl.² A01G *13/06*
U.S. Cl. 126—59.5 3 Claims

1. An anti-pollution insert for heating pipes, chimney's or the like, comprising in combination,

a. a sleeve member having at its upper circumference an upper outward extending round flange and at its bottom circumference a lower outward extending round flange,
b. said sleeve member being secured within an associated heating pipe, having air apertures at its bottom portion, said upper outward extending flange mounted in airtight relationship to said heating pipe inner surface and said lower outward extending flange connected to said heating pipe inner surface at a location above said air apertures whereby said upper flange, said lower flange, said sleeve member exterior surface and said heating pipe interior surface form an annular shaped chamber,
c. a plate means mounted to said sleeve bottom circumference and provided at its approximate center with a flame inlet opening which is in alignment with a thereunder mounted associated fuel nozzle means,
d. said lower outward extending round flange provided with a plurality of air inlet openings so that air can enter said annular shaped chamber, and

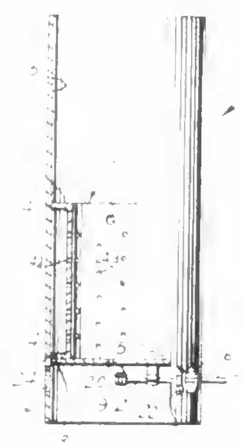

e. said sleeve member provided with a plurality of predetermined sized sleeve openings for conducting air from said annular chamber at evenly controlled flow radially inwards of said sleeve member thereby mixing with said associated flame and its inherent gasses and fuel particles so that a thorough combustion is obtained resulting in a smokeless heat output.

4,062,343
TUBE FIRING BURNER
Lyle S. Spielman, Rockford, Ill., assignor to Eclipse, Inc., Rockford, Ill.
Filed May 12, 1976, Ser. No. 685,887
Int. Cl.² F24C *3/00*
U.S. Cl. 126—91 A 4 Claims

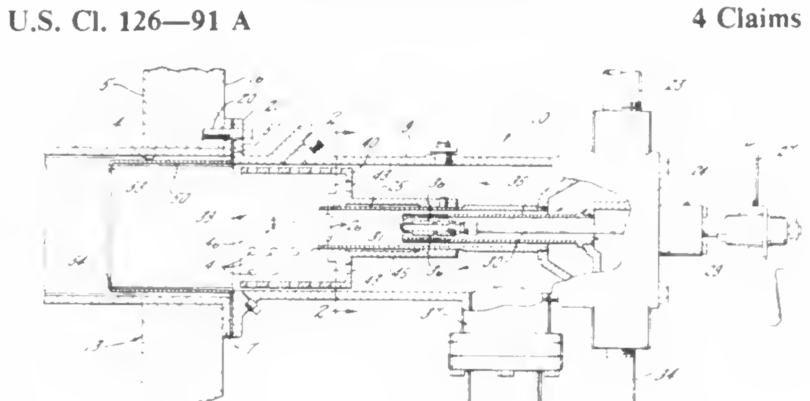

1. The combination of, a heat-insulating wall having inner and outer sides and having an opening extending between said sides, a radiant tube projecting inwardly from the inner side of said wall and having an outer portion disposed within the full length of said opening, and a burner for firing said tube and having a tubular body secured to the outer side of said wall and located in substantially coaxial relation with said tube, a fuel delivery pipe extending into said body from the outer end portion thereof, means for supplying a flow of fuel through said pipe, means for supplying a flow of combustion air into said body from the outer end portion thereof, means for shaping said air into a tubular stream adjacent the discharge end of said delivery pipe, a metallic combustion sleeve coaxial with said delivery pipe and positioned to receive the flow of fuel and the tubular stream of air, said combustion sleeve extending through the full length of said opening and being telescoped within and spaced radially inwardly from the outer end portion of said tube, said combustion sleeve having an inner end extending inwardly beyond the inner side of said wall so as to discharge the fuel/air mixture into said tube beyond said wall, and an abrupt restriction within said sleeve adjacent the inner end thereof and beyond the inner side of said wall to create turbulence within the fuel/air mixture discharged from said sleeve.

4,062,344
FIREPLACE HEATING SYSTEM
C. C. Mayes, P.O. Box 8, Pigeon Forge, Tenn. 37863
Filed May 22, 1975, Ser. No. 580,022
Int. Cl.² F24B *1/18*
U.S. Cl. 126—120 5 Claims

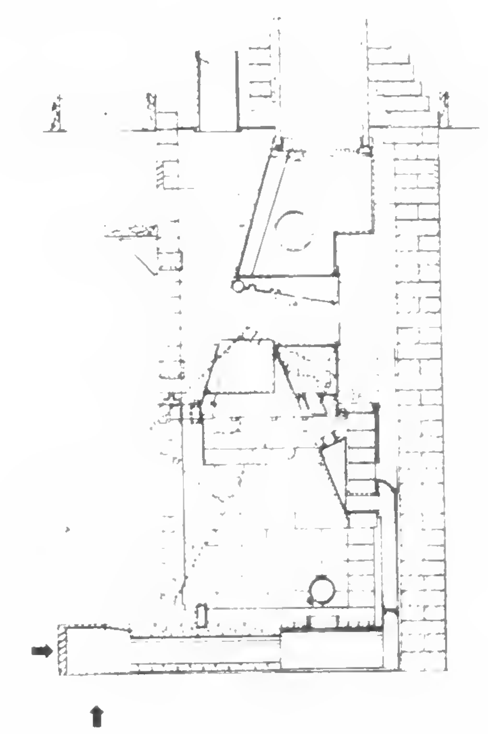

1. In a heating system including a fireplace having a front opening, a top opening and a chimney having a bottom opening, the improvement comprising

hood means interposed in substantially free-standing relationship between said top opening of said fireplace and said bottom opening of said chimney and including wall means defining a passageway for flue gases and the like from said fireplace to said chimney, said passageway having a major dimension oriented generally upwardly from the top opening of said fireplace to said bottom opening of said chimney and being inclined with respect to the vertical whereby a substantial surface area of said wall means extends obliquely upwardly and across a substantial portion of the flow path of said flue gases as said flue gases pass upwardly through said passageway and said surface area of said wall is thereby heated, said wall means further defining a bottom peripheral edge substantially coterminal with said top opening of said fireplace, said hood means having cross-sectional dimensions less than the corresponding cross-sectional dimensions of said top opening of said fireplace such that said hood means is withdrawable through said top opening,
flange means detachably secured to at least a major portion of the peripheral dimension of said bottom peripheral edge of said wall means and extending generally outwardly therefrom to engage said top opening of said fireplace and at least partially support said hood above said top opening of said fireplace, whereby said hood is removable through said top opening of said fireplace when said bottom edge of said wall means is detached from said flange means,
housing means exterior to said hood means and extending between said fireplace and said chimney to enclose the space therebetween, said housing means being spaced apart from said hood means and cooperating therewith to define an air flow passageway exteriorly of said hood means and between said hood means and said housing means,
duct means pneumatically connecting said passageway between said housing means and said hood means with a source of air remote from said fireplace, and
further duct means pneumatically connecting said passageway with a remote location at which heat is desired, whereby air passing through said passageway is heated by reason of its proximity of said surface of said hood means and passed to said remote location.

4,062,345
AIR HEATING AND CIRCULATING APPARATUS
Isaac C. Whiteley, 1650 S. Canyon Drive, Redmond, Oreg. 97756
Filed Oct. 9, 1975, Ser. No. 620,938
Int. Cl.² F24B *7/00, 9/00*
U.S. Cl. 126—121 8 Claims

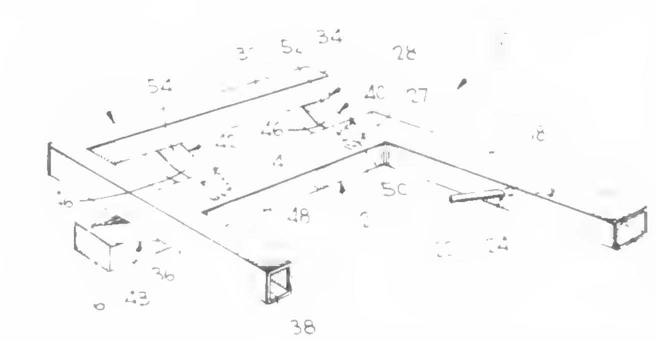

1. Air heating and circulating apparatus adapted to be positioned on the floor of a fireplace comprising

a base pipe defining a primary heating chamber adapted to be positioned at the rear of the fireplace and an inlet leg angularly extending from one end of said primary heating chamber to an inlet opening adjacent the front of the fireplace and adapted to be positioned along one side of the fireplace for supplying air to said primary heating chamber;
a hot air discharge pipe defining a secondary heating chamber positioned above and slightly behind said primary heating chamber and having an open end and a closed end and an outlet leg angularly extending from said open end of said secondary heating chamber to an outlet opening and adapted to be positioned along an opposite side of the fireplace for discharging air, said hot air discharge pipe being arranged on an upward incline from said secondary heating chamber to said outlet opening; and
support pipe means mounting said hot air discharge pipe above said base pipe and providing communication between said primary heating chamber and said secondary heating chamber, said support pipe means including first and second L-shaped support pipes fixed to a rear side wall of said primary heating chamber and a bottom wall of said secondary heating chamber, said first and second support pipes being arranged at an angle to the vertical, whereby air is heated in said primary heating chamber and moves to said secondary heating chamber with a horizontal velocity component and the heated air in said secondary heating chamber is discharged from said outlet opening due to said incline of said hot air discharge pipe.

4,062,346
SOLAR COLLECTOR UNIT
Felix Rapp, Jr., Marlboro, and James M. Barron, Framingham, both of Mass., assignors to DIY-Sol, Inc., Marlboro, Mass.
Filed July 26, 1976, Ser. No. 708,871
Int. Cl.² F24J *3/02*
U.S. Cl. 126—270 8 Claims

1. A solar collector unit comprising:
a corrugated foil absorber element of low thermal mass;
a reflectively selective coating on said absorber unit;
a plurality of thin, low mass, low thermal conductivity, thermal isolating wire elements extending in a plane gen-

erally parallel to and beneath said absorber element for supporting said absorber element;

an insulation medium spaced from and generally parallel to said absorber element, disposed on the bottom side of said absorber element;

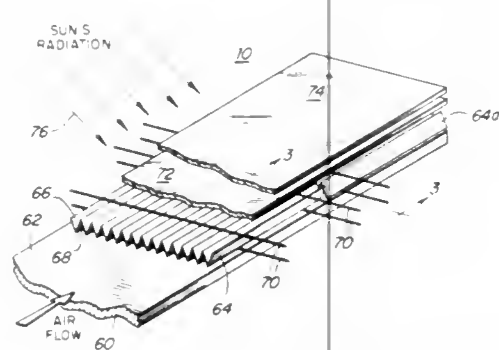

a reflector surface carried on said insulation medium between said bottom side and said medium; and

an inner transparent insulating sheet spaced from and generally parallel to said absorber element disposed on the top side of said absorber for transmitting solar radiation to said absorber element and suppressing heat loss.

4,062,347
SOLAR HEATING SYSTEM
Ronald N. Jensen, Hampton, Va., assignor to The United States of America as represented by the Administrator of the National Aeronautics and Space Administration, Washington, D.C.
Filed Aug. 24, 1976, Ser. No. 717,320
Int. Cl.² F24J *3/02*
U.S. Cl. 126—270 **4 Claims**

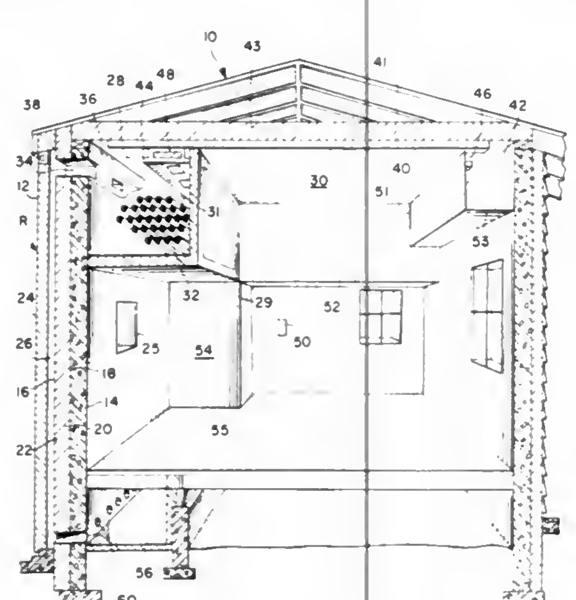

1. In a structure having a roof, an interior area and a wall which receives solar energy from the sun, a solar heating system comprising:

a solar collector means enclosing a heat absorbing medium and including a transparent structural facing disposed in spaced relation with an absorber plate;

said solar collector means being affixed to the wall of the structure for receiving solar energy and for transferring said solar energy to said heat absorbing medium in the form of heat;

a heat storage plenum means for selectively absorbing heat from or transferring heat to said heat absorbing medium; said heat storage plenum means communicating with said solar collector thereby providing a first passage by which said heat absorbing medium can enter said heat storage means;

a radiator means having first and second opposed ends forming the ceiling of the interior area and communicating with said heat storage plenum means at said first opposed end for providing a second passage for said heat absorbing medium and for transferring heat from said heat absorbing medium to the interior area of the structure;

an insulation backing for said radiator means to prevent heat loss from said radiator only at the surface thereof opposite the exposed interior ceiling and disposed toward the roof;

a duct means communicating with said radiator means at said second opposed end for providing a third passage for said heat absorbing medium between said radiator means and said solar collector means and for providing a fourth passage for said heat absorbing medium between said radiator means and said heat storage plenum means;

said heat absorbing medium being completely enclosed and thus having a plurality of flow paths through said solar collector and said first, second, third and fourth passages; and

a damper means for selectively altering said flow paths of said heat absorbing medium.

4,062,348
PHOTOCHEMICAL THERMAL-ENERGY PROCESS AND GENERATOR
Robert Peter Morrison, Pheasant Run Apts., Harleysville, Pa. 19438
Filed Aug. 27, 1976, Ser. No. 718,342
Int. Cl.² F24J *3/02*
U.S. Cl. 126—270 9 Claims

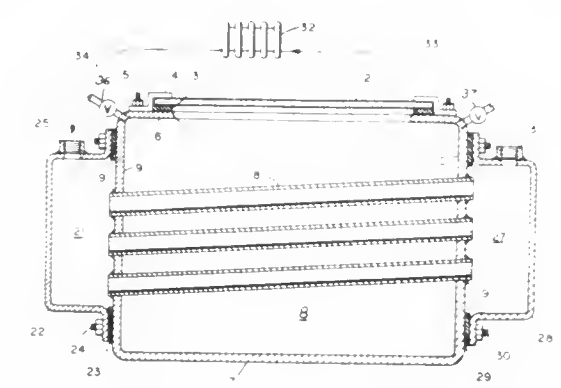

1. The method of generating thermal energy by a photochemical process which comprises exposing a gas which is enclosed in a sealed vessel to light, said gas being selected from the group which consists of chlorine, bromine and iodine and which is dissociated by light from a molecular state to an excited atomic state and which on contact with a third body is reconverted to a molecular state with the production of heat, presenting a third body inside the sealed vessel with which the gas atoms in the excited state come in contact and thereby produce heat on reconversion of the gas to the molecular state, and transmitting the heat from said third body to the outside of the vessel.

4,062,349
METHOD FOR THE CONTROLLED HEATING OF A LIQUID RESERVOIR, AND RESERVOIR SYSTEM FOR CARRYING OUT THE METHOD
Hermann Birnbreier, Heidelberg, Germany, assignor to Brown, Boveri & Cie Aktiengesellschaft, Mannheim, Germany
Filed Apr. 26, 1976, Ser. No. 680,051
Claims priority, application Germany, Apr. 26, 1975, 2518620
Int. Cl.² F24J *3/02*
U.S. Cl. 126—271 **5 Claims**

1. In a method for controlled heating of a liquid reservoir by a heat source of varying temperature wherein the heat from the heat source is fed through a heat carrier circuit to the reservoir into a region of a heating zone thereof which extends over part of the height of the reservoir and through which the heat carrier flows from the top to the bottom thereof, so that when heated stored liquid is withdrawn from the reservoir, colder liquid flows after it into the reservoir, the temperature of the heat carrier heated in the heat source and the temperature of the stored liquid in the region of the upper part of the heating zone being measured and compared, and circulation of the heat carrier through the circuit being initiated only when the measured temperature of the heated heat carrier exceeds the measured temperature of the stored liquid, the improvement therein which comprises introducing the colder liquid into the lower part of the reservoir, when the heated stored liquid is withdrawn from the reservoir, and forming a stratum of the colder liquid below the heated stored liquid remaining in the reservoir, and measuring the temperature of the stored liquid exclusively in the region of the upper part of the heating zone and then additionally initiating the circulation of the heat carrier through the circuit when the measured temperature of the heated heat carrier exceeds a pre-set limit temperature corresponding substantially to a temperature of use required by a consumer supplied by the liquid reservoir.

3. In a storage system having at least one liquid reservoir and a heat source of varying temperature connected by advance and return lines into a heat carrier circuit, a heating zone extending over at least part of the height of the liquid reservoir, the heating zone being traversible in a direction from the top to the bottom thereof by heat carrier heated by the heat source whereby the heat carrier gives up at least part of its heat to stored liquid in the reservoir, cold liquid supply means connected to the liquid reservoir, heated liquid discharge means

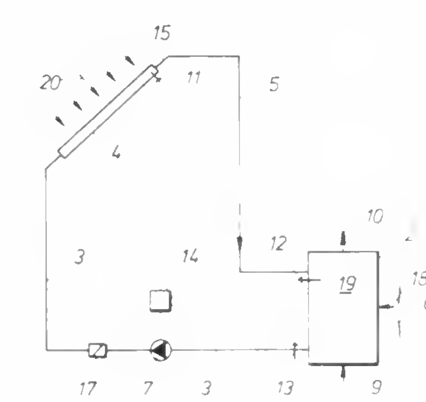

connected to the liquid reservoir at the top thereof, first temperature measuring means located in vicinity of the connection of the advance line to the heat source for measuring the temperature of the heat carrier as heated by the heat source, a second temperature measuring means located in the liquid reservoir for measuring the temperature of the stored liquid, at least one circulation shut-off device connected in the heat carrier circuit, and comparison means connected to the first and second temperature measuring means and the circulation shut-off device for comparing the measured temperatures and control means for opening the shut-off device when the temperature of the heated heat carrier in the heat source measured by the first temperature measuring means is higher than the temperature of the liquid in the reservoir measured by the second temperature measuring means, the improvement therein comprising: the connection for the cold liquid supply means being located at the bottom of the liquid reservoir, and the second temperature measuring means being located in the upper part of the heating zone of the liquid reservoir, and the shut-off device being openable by the control means when the temperature of the heated heat carrier in the heat source measured by the first temperature measuring means exceeds a pre-set limit temperature corresponding substantially to a temperature of use required by a consumer supplied by the liquid reservoir.

4,062,350
SOLAR WATER HEATER
Gerald C. Reed, 14544 Langhill, Hacienda Heights, Calif. 91745
Filed June 4, 1976, Ser. No. 692,867
Int. Cl.² F24J *3/02*
U.S. Cl. 126—271 **12 Claims**

1. A solar water heating panel for heating liquids by sunlight, said panel comprising:

a base sheet fabricated from a corrosion resistant material comprising stainless steel;

a metallic absorber sheet fabricated from a sheet of stainless steel having at least one surface thereof coated with copper affixed in water-tight relationship along its outer edges

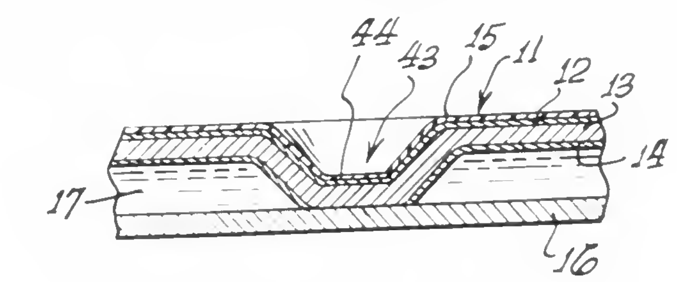

to said base sheet and separated therefrom, said absorber sheet being positioned in a parallel relationship with respect to said base sheet and spaced between 1/16th and ¼ of an inch from said base sheet; and

means for introducing the water to be heated and for removing the heated water.

4,062,351
THERMAL PANEL FOR HEATING LIQUIDS
Peter J. Hastwell, 133 Mills Terrace, North Adelaide, 5006 South Australia, Australia
Filed June 18, 1975, Ser. No. 587,806
Claims priority, application Australia, June 21, 1974, 7925/74; Jan. 28, 1975, 0394/75
Int. Cl.² F24J *3/02*
U.S. Cl. 126—271 **21 Claims**

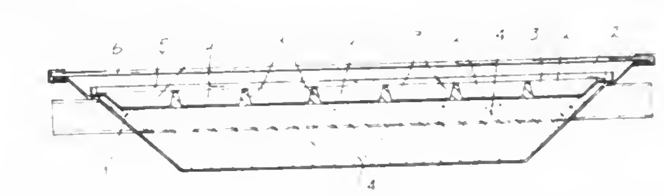

1. A solar generator panel for heating water, comprising a housing (**25**), a trough (**1**) insertable into said housing (**25**), a water inlet (**26**) and water outlet (**27**), a first transverse distributor channel (**23**) communicating with said water inlet (**26**), a second transverse distributor channel (**24**) communicating with said water outlet, a series of parallel spaced walls (**3**) in said trough extending from said first distributor channel (**23**) and forming a plurality of parallel flow channels in said trough to contain water, said flow channels having a top (**5**), a cover which is transparent to solar radiation closing the top of said flow channels and bonded to said walls (**3**) to allow solar radiation to pass into said flow channels so as to absorb energy in the water from the radiation, and an absorber (**9**) for solar energy forming at least a water-supporting surface of said trough to absorb as heat that solar energy which passes through the water, and to reradiate and conduct such heat energy back to the water.

4,062,352
SOLAR FLUID HEATER
Israel Arnold Lesk, Scottsdale, Ariz., assignor to Motorola, Inc., Schaumburg, Ill.
Division of Ser. No. 588,977, June 20, 1975, abandoned. This application Feb. 14, 1977, Ser. No. 768,309
Int. Cl.² F24J *3/02*
U.S. Cl. 126—271 **2 Claims**

1. A non-hermetic flat plate solar fluid heater comprising:

a. a first planar outer cover and a separated and parallel disposed first selectively coated absorber means for collecting and transmitting solar energy to a fluid to be heated,

b. a first plastic convection suppressor means having a plurality of surfaces disposed intermediate to and in an abut-

ting relationship between said first planar outer cover and said first selectively coated absorber means for forming a plurality of closed compartments for reducing heat losses,
c. a plurality of passage means for carrying the fluid to be heated being disposed at one of its sides adjacent to aid first planar selectively coated absorber means,
d. a second planar outer cover and a separated and parallel disposed second selectively coated absorber means disposed adjacent to the other side of said plurality of passage means for collecting and transmitting solar energy to the fluid to be heated, and

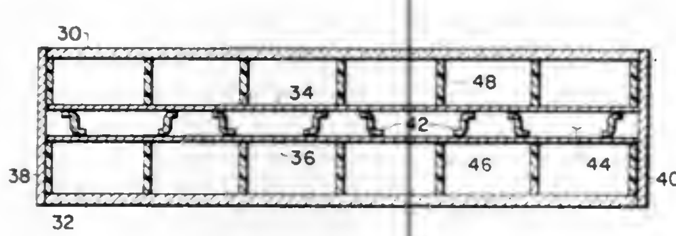

e. a second plastic convection suppressor means having a plurality of surfaces disposed intermediate to and in an abutting relationship between said second planar outer cover and said second selectively coated absorber means for forming a plurality of compartments for reducing heat losses and for forming a dual sided unit.

4,062,353
RADIOACTIVE SYRINGE SHIELD HAVING RETENTIVE BUSHING
Edward Henry Foster, and James M. Reiss, both of Center Moriches, N.Y., assignors to Atomic Products Corporation, Center Moriches, N.Y.
Filed July 8, 1976, Ser. No. 703,515
Int. Cl.² A61B *6/00*
U.S. Cl. 128—1.1 **3 Claims**

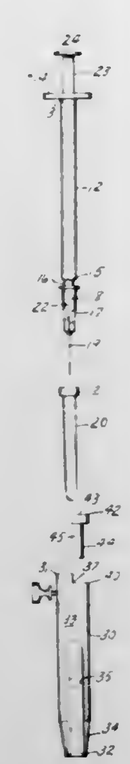

1. In a combination hypodermic syringe and removable radioactive shield therefor, the improvement comprising: said syringe having a main barrel element of given outer diameter, a needle element on a distal end thereof, and a needle cover enclosing said needle element and having an outer diameter greater than that of said barrel element; said shield including a generally tubular body defining an axially disposed through bore therein of diameter at least equal to the diameter of said needle cover, set screw means penetrating said tubular body and having an inner end thereof adapted to contact an outer surface of said main body of said syringe; and an arcuately shaped sleeve having an outer surface of radius corresponding to that of said through bore, and an inner surface of radius corresponding to said given diameter of said main barrel of said syringe, said sleeve being selectively positioned between said through bore and said main barrel element to lie at least partially along the axis of said set screw means to position said main barrel coaxially relative to said through bore, and permit selective withdrawal of said syringe with attached needle cover through said last mentioned bore.

4,062,354
INTRACRANIAL PRESSURE TRANSDUCER SYSTEM
H. Lyndon Taylor; H. Grady Rylander, and James L. Story, all c/o University of Texas at Austin, Dept. of Electrical Engineering ENS 436, Austin, Tex. 78712
Filed July 1, 1975, Ser. No. 592,361
Int. Cl.² A61B *5/00*
U.S. Cl. 128—2 R **18 Claims**

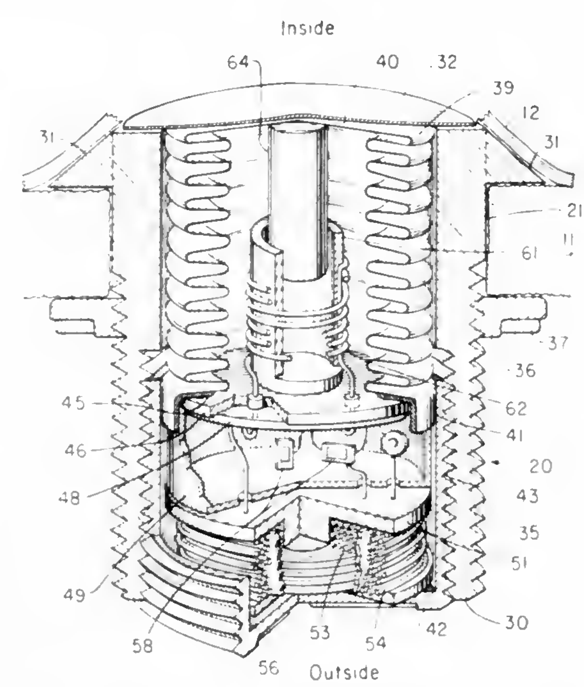

1. Apparatus for measuring epidural pressure resulting from pressure within the cranial vault of a living person, comprising a tubular holder means having a flexible inert impervious membrane sealed around the terminal end of the tubular wall at one end thereof to close said one end thereof, said one end of said tubular holder means closed by said membrane being adapted for insertion through a hole through the skull to bring said membrane into contact against the dura mater covering of the cranial vault, means for fixedly yet releasably connecting said holder means to the skull, sensing means disposed within said holder means having a portion thereof fixed to said holder means and having a spaced end thereof flushly engaged with said membrane to be movable therewith when said membrane is moved by movement of the dura caused by changes in epidural pressure, transmitter means supported within said holder means for transmitting electromagnetic signals to be received by a receiver outside of said holder means, the frequency of said electromagnetic signals being varied in response to movements of said spaced end of said sensing means engaged with said membrane, and means supported within said holder means for electrically energizing said transmitter means.

4,062,355
DEVICE FOR USE IN EVALUATING THE LOWER LEG AND FOOT
Joshua Morley Kaye, 7309 N. Ashland Ave., Chicago, Ill. 60626
Filed Apr. 9, 1976, Ser. No. 675,641
Int. Cl.² A61B *5/09.*
U.S. Cl. 128—2 S **20 Claims**

1. A device for use in rendering evaluations of the lower leg and foot of a person comprising:
heel stationing means to automatically provide a heel reference line parallel to the vertical bisection of the posterior surface of the calcaneus bone when the heel is placed therein;
forefoot measuring means pivotally mounted on said heel stationing means to automatically determine and provide an indication of the angular deviation of the plane of the ball of the foot from a plane perpendicular to said heel reference line, thus producing forefoot varus and valgus measurements; and

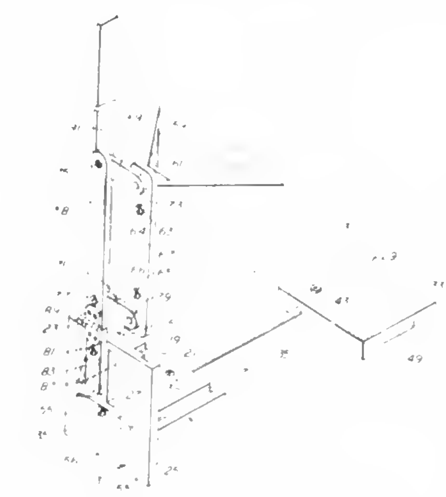

rearfoot measuring means pivotally mounted on said heel stationing means to determine a rearfoot measuring line parallel to the vertical bisection of the lower leg and automatically provide an indication of the angular deviation between said heel reference line and said rearfoot measuring line, thus producing rearfoot varus and valgus measurements.

4,062,356
UNDERWATER DIVING SYSTEM
Daniel B. Merrifield, Redondo Beach, Calif., assignor to U.S. Divers Co., Santa Ana, Calif.
Filed Dec. 4, 1974, Ser. No. 529,410
Int. Cl.² A62B *7/04;* **B63C** *11/22*
U.S. Cl. 128—142.2 **12 Claims**

1. A self contained breathing apparatus system for underwater diving comprising:
a plurality of pressure vessels;
means for holding said pressure vessels in adjacent relationship to each other;
a conduit forming a manifold between the outlet of each pressure vessel interconnecting each of said pressure vessels in parallel;
a container surrounding and attached to said pressure vessels;
a first stage regulator interconnected with said conduit for providing first stage regulation of gas delivered from said pressure vessels automatically when a pre-established pressure imbalance occurs therein,
a second stage demand regulator in fluid connected relationship to said first stage regulator adapted to project from said container to regulate gas for breathing purposes upon demand by a user;
a reserve pressure means in fluid connected relationship to said conduit which closes at a pre-established pressure, and which can then be opened manually to allow the gas with said reserve pressure to flow therethrough as a reserve gas supply; and,
means for filling said pressure vessels connected to said conduit.

4,062,357
RESPIRATOR MASK
Asmund Sigurd Laerdal, Stavanger, Norway
Continuation of Ser. No. 458,655, April 8, 1974, abandoned. This application Mar. 25, 1976, Ser. No. 670,370
Int. Cl.² A61M *15/00*
U.S. Cl. 128—146 **9 Claims**

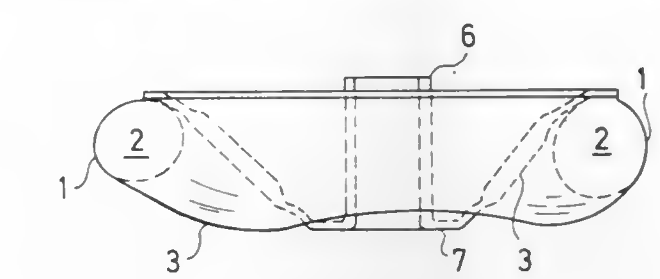

1. A respirator mask which comprises: a yieldably resilient deformable circumferential rim formed of a plastics material for contacting the face of a person; and a central portion peripherally attached to said rim and including an air inlet tube, said central portion having a single-walled structure made from a deformable plastics material and being dome-shaped and including at least one substantially annular area of locally reduced thickness surrounding the air inlet tube adjacent thereto having sufficient flexibility for facilitating bulging in of the central portion the interior area bound by into said rim whereby the central portion is maintained in said area.

4,062,358
RESPIRATORS
Richard W. Kritzer, 5800 N. Pulaski Road, Chicago, Ill. 60646
Filed Apr. 21, 1976, Ser. No. 679,010
Int. Cl.² A61M *16/00*
U.S. Cl. 128—208 **10 Claims**

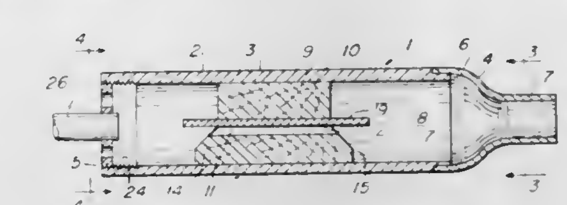

1. A respirator of the type adapted to be connected by a tube to a supply source of oxygen, said respirator comprising
a. an elongated housing having a first end and a second end and having a passageway extending longitudinally therethrough and being of a size and shape adapting it to be carried in the hand of a person, and having a mouthpiece on said first end thereof communicating with said passageway for insertion into said person's mouth and means within said passageway to thereby enable the person to
1. inhale in one direction longitudinally through said passageway and from said second end to said first end, and
2. exhale longitudinally through said passageway in the direction opposite to said one direction and from said first end to said second end,
b. means within said passageway between said first and

second ends for vibrating material inhaled and exhaled therethrough, and

c. other means at said second end of said housing, for supportingly holding an end of such an oxygen tube in position in a portion of said other means to feed oxygen from such a supply source into said passageway,

d. said other means having a passage means therethrough for the passage of air into and out of said passageway exteriorly of such a tube disposed in said position in said portion.

4,062,359
LOW TEMPERATURE BREATHING APPARATUS
Mark E. Geaghan, 1910 Page St., No. 5, San Francisco, Calif. 94117
Filed Aug. 9, 1976, Ser. No. 712,490
Int. Cl.^{2} A61M *15/00*
U.S. Cl. 128—212 **4 Claims**

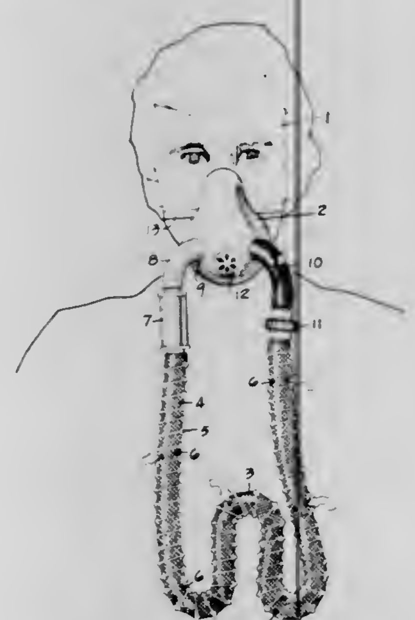

1. A breathing apparatus for inhalation of low temperature air by a person comprising:
a tubular member having perforations linearly disposed therein and adapted for contact against said person's body inside his outer garments and having a first end and a second end;
a face mask disposed for positioning against the nose and mouth of the user;
a hollow tube positioned on said face mask and connecting the interior of said mask with said first end of said tubular member;
a support member positioned on said face mask and connecting with said second end of said tubular member;
valve means disposed to admit air from outside said outer garments to the interior of said tubular member;
valve means to permit passage of air from the interior of said mask to the exterior only.

4,062,360
ATRAUMATIC FLUID HANDLING METHOD AND APPARATUS
Donald J. Bentley, Irvine, Calif., assignor to Bentley Laboratories, Inc., Irvine, Calif.
Filed Apr. 2, 1976, Ser. No. 672,982
Int. Cl.^{2} A61M *1/00*
U.S. Cl. 128—276 **22 Claims**

1. An atraumatic method of fluid handling comprising:
opening a fluid valve responsive to the pressure decrease about said fluid valve;
opening a vacuum valve responsive to the pressure decrease about said fluid valve; and

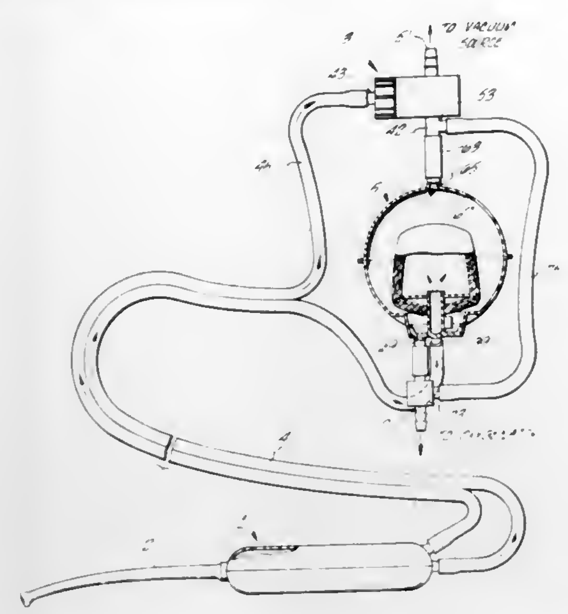

conveying fluid through said fluid valve response to said opening of said vacuum valve.

4,062,361
BILAMINAR OSTOMY SEALING DISC
Ib Finn Poulsen, Vaerloese, Denmark, assignor to Coloplast International A/S, Denmark
Filed July 7, 1975, Ser. No. 593,252
Claims priority, application Denmark, July 8, 1974, 3660/74
Int. Cl.^{2} A61F *5/44*
U.S. Cl. 128—283 **6 Claims**

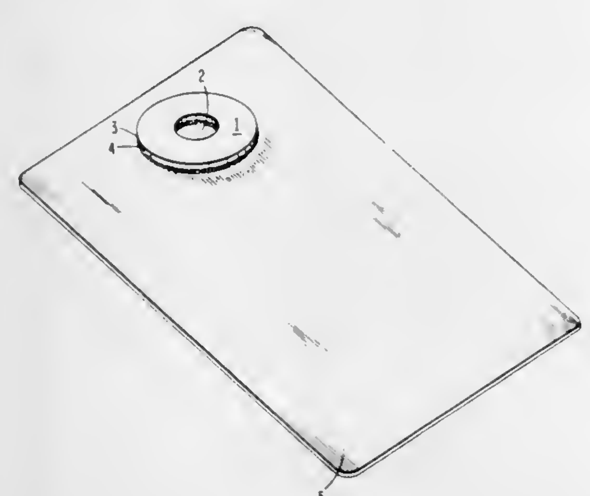

6. An ileostomy, colostomy or ureterostomy pouch adapted to fit around a stoma and having an opening through which a discharge from the stoma may pass into the pouch, said pouch comprising a sealing disc attached to said pouch for forming a seal with respect to the skin around the stoma, said disc comprising a first layer of a hydrocolloid material and a second layer of an elastomeric material, said layer being firmly attached to each other and said elastomeric layer being attached to said pouch.

4,062,362
DISPOSABLE AND SELF ADJUSTABLE DIAPERS
Charles H. Schaar, Lake Zurich, Ill., assignor to Colgate-Palmolive Company, New York, N.Y.
Filed Dec. 29, 1975, Ser. No. 644,699
Int. Cl.^{2} A61F *13/16*
U.S. Cl. 128—287 **10 Claims**

1. A disposable diaper comprising, an absorbent pad assembly having a backing sheet, a top sheet, a pair of side edges and a plurality of separate longitudinally extending absorbent pads disposed in a side-by-side relationship laterally across the pad assembly between said backing sheet and top sheet, means to permit relative longitudinal movement of opposed lateral side margins of said pad assembly comprising locating said pads in the pad assembly with adjoining sides of the pads being longi-

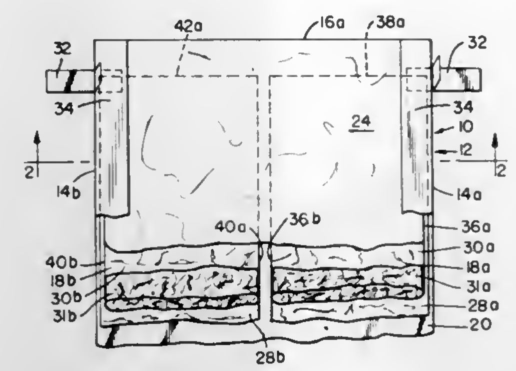

tudinally separated and movable along a line extending between end edges of the pads and through the thickness of the pads.

4,062,363
CATHETER
Francis J. Bonner, Jr., 1240 Conshohocken State Road, Gladwyne, Pa. 19035
Continuation-in-part of Ser. No. 404,400, Oct. 9, 1973, Pat. No. 3,894,540. This application July 8, 1975, Ser. No. 594,097
Int. Cl.^{2} A61M *25/00*
U.S. Cl. 128—349 R **25 Claims**

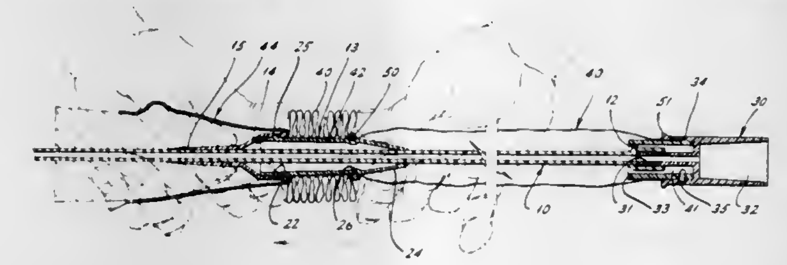

1. A catheter comprising a flexible elongated conduit adapted for insertion into a body passage, said conduit having a forward insertion end and a rearward distal end spaced rearwardly from said insertion end, a handpiece surrounding a portion of said conduit in the area of said insertion end, said handpiece having a forward end and a rearward end, said conduit portion being longitudinally slidably positioned within said handpiece, means forming a longitudinally retractable envelope, sealing means sealing said envelope to said handpiece at a location spaced forwardly of said rearward end of said handpiece, with a portion of said envelope free of said handpiece rearwardly of said seal, said envelope also being sealed to said conduit rearwardly of said handpiece to provide a sealed, enclosed space surrounding at least a rearward position of said handpiece which is located rearwardly of said seal, and said envelope also surrounding at least a portion of said conduit, the exterior surface of said rearward portion of said handpiece comprising a substantially cylindrical body portion for providing a gathering support for the longitudinally retracted portion of the envelope, and a ramp-like conical portion sloping to adjacent the surface of the conduit for supporting forward sliding movement of said envelope concurrently with insertion of said conduit into said body passage.

4,062,364
ELECTRODE FOR USE IN LOW FREQUENCY ELECTRONIC THERAPY DEVICE
Kazumi Masaki, 7-3, 4-chome Fujishirodai, Suita, Osaka, Japan
Filed Sept. 25, 1975, Ser. No. 616,669
Claims priority, application Japan, June 30, 1975, 50-9210[U]
Int. Cl.^{2} A61N *1/18*
U.S. Cl. 128—405 **6 Claims**

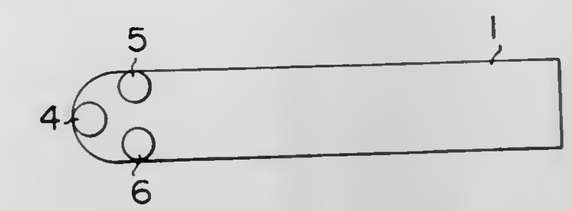

1. A low frequency electronic therapy device adapted to apply a low frequency electric stimulus to a therapy point of a warm-blooded animal which device comprises a casing, a low frequency oscillator contained in said casing, said oscillator having output terminals, at least two electrodes electrically connected to the output terminals of the oscillator, said electrodes being adapted to be brought in contact with the skin at the therapy point, each of said electrodes including a hollow hemispherical conductive member having a mouth and a plurality of perforations therethrough and a mounting metal base water-tightly fitted into the mouth of said hollow member to form a hollow chamber in said hollow member for storing water therein, each of said mounting metal bases being mounted on the outerside of said casing and electrically connected to a corresponding output terminal of said oscillator, a water-impregnating cover being applied to the outer surface of each of said conductive member covering said perforations, so that water stored in said hollow chamber exudes gradually through said perforations to impregnate said water impregnating cover, whereby said water impregnating cover is maintained impregnated with water to keep good electric contact between the electrode and the skin.

4,062,365
APPARATUS FOR GENERATING APPLIED ELECTRICAL STIMULI SIGNALS
Stanley L. Kameny, 13763 Raywood Drive, Los Angeles, Calif. 90049
Filed June 5, 1975, Ser. No. 583,872
Int. Cl.^{2} A61N *1/36*
U.S. Cl. 128—422 **8 Claims**

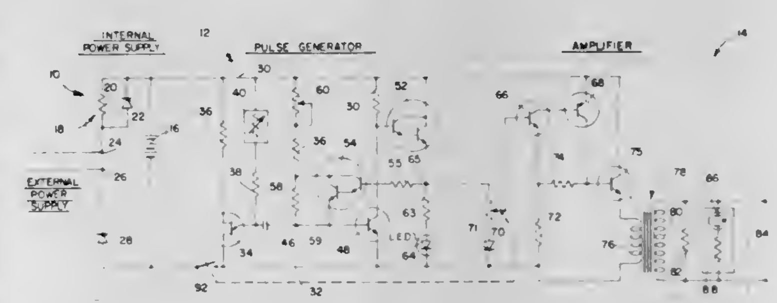

1. An electrically operable stimulator for generation and application of electrical stimuli signals to the body of an animal for control of physiological body conditions, said stimulator comprising:
a. a pulse generator comprised of:
1. unijunction transistor triggering means for energizing said pulse generator when said triggering means is switched from an off condition to an on condition,
2. pulse generating transistorized means,
3. capacitor means interposed in series relationship to said transistorized means and said triggering means,
4. a high gain and high impedance control amplifier in said pulse generator for deriving and presenting an output signal.

5. a shorting switch operatively connected to and operable by said control amplifier, and
6. a current limiting resistor connected in relation to said shorting switch and to control current flow relative to charge and discharge times of said capacitor,

b. amplifier means operatively connected to said control amplifier means of said pulse generator and comprising:
1. a first amplifier section and a second amplifier section,
2. an output level control means operatively connected to said first and second amplifier sections,
3. transforming means operatively connected to said first and second amplifier sections to provide an output signal for application to the body of an animal.

4,062,366
RETHRESHER
Frans J. G. C. De Coene, Zedelgem, Belgium, assignor to Sperry Rand Corporation, New Holland, Pa.
Filed June 23, 1976, Ser. No. 699,113
Claims priority, application United Kingdom, June 26, 1975, 27066/75
Int. Cl.^{2} A01F *12/18*
U.S. Cl. 130—27 F **7 Claims**

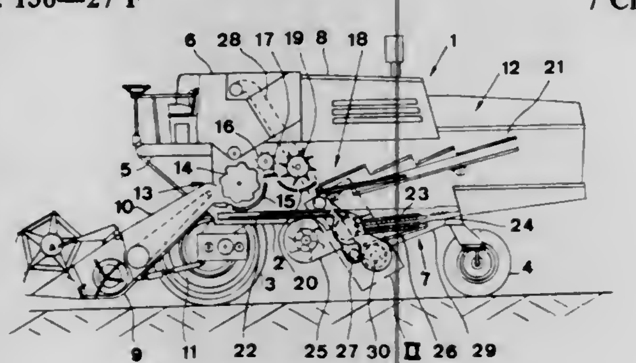

1. An agricultural harvesting machine comprising:
a chassis,
means mounted to the chassis for feeding crop material thereto,
threshing, separating and cleaning means mounted to the chassis for threshing and separating grain from the crop material and for cleaning threshed and separated grain and for separating tailings from the clean grain,
a cylindrical rethresher casing with a circumferential inlet opening,
stationary rethresher means on the inner curved wall of the cylindrical rethresher casing downstream of the inlet opening,
spiral conveyor fins on the inner curved wall of the cylindrical rethresher casing downstream of the stationary rethresher means,
a first cylindrical impeller casing with a circumferential outlet opening and connected to the rethresher casing,
a common wall between the rethresher casing and the first impeller casing with a transition opening therein at a location adjacent the spiral conveyor fins,
a rethresher rotor rotatably mounted within the cylindrical rethresher casing cooperable with the stationary rethresher means to rethresh tailings supplied thereto, and cooperable with said fins to effect movement of the rethreshed tailings generally axially towards said transition opening in the common wall, the common wall at the location of the rethresher casing inlet opening and the stationary rethresher means serving as a shield preventing tailings from being discharged prematurely from the rethresher casing,
a first impeller rotor mounted within the first impeller casing and coaxially with the rethresher rotor and adapted to receive rethreshed tailings from the rethresher rotor through the transition opening and to discharge the rethreshed tailings substantially tangentially through the impeller casing outlet opening, and
transition means between the cleaning means and the rethresher casing for transferring tailings from the cleaning means to the rethresher casing.

4,062,367
TIERED CONTAINER WITH FLOW DISTRIBUTION SYSTEM
Robert C. Johnson, Winston-Salem, N.C., assignor to Reynolds Leasing Corporation, Jacksonville, Fla.
Filed May 3, 1976, Ser. No. 682,413
Int. Cl.^{2} A24B *3/10, 3/18*
U.S. Cl. 131—134 **10 Claims**

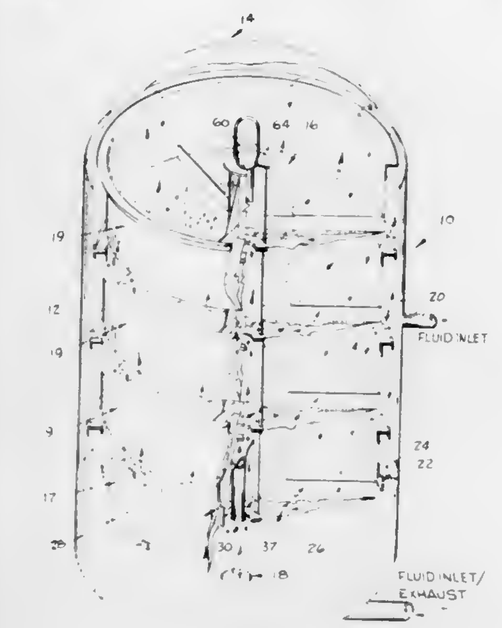

1. A tiered container for use in the autoclave of an apparatus used in a process for increasing the filling capacity of tobacco, said process utilizing a volatile organic compound to impregnate the tobacco carried in beds in the tiered container and a hot gas to vaporize the compound in the tobacco, said tiered container comprising at least two baskets, each of said baskets including:
a. a bottom with an aperture therein;
b. a side wall secured to and circumscribing said bottom;
c. a perforated member positioned above said bottom and within said side wall providing a flow passage between said perforated member and said bottom, said perforated member receiving a portion of the total quantity of tobacco to be processed; and
d. a conduit communicating with the flow passage and said aperture within its basket and the aperture and flow passage of an adjacent basket, whereby a fluid can pass upwardly through said apertures into said flow passages and through the perforated members into the tobacco beds and downwardly through said beds into said flow passages and into said conduits adjacent said basket.

4,062,368
TOBACCO-SMOKE FILTERS
Robin Arthur Crellin, Romsey; Christopher Robert Jenkins, and James William Percy Phelpstead, both of Southampton, all of England, assignors to Brown & Williamson Tobacco Corporation, Louisville, Ky.
Filed June 19, 1975, Ser. No. 588,258
Claims priority, application United Kingdom, June 24, 1974, 27958/74
Int. Cl.^{2} A24B *15/027*
U.S. Cl. 131—265 **4 Claims**

1. A tobacco-smoke filter which reduces vapor-phase constituents in tobacco smoke without adversely affecting taste, said filter containing from 10 to 200 mg of a particulate material comprised of carbon particles having a size substantially within the range of 300 to 1700 micron, said particles being coated over their external and internal surfaces, individually and without being bonded together, with a discontinuous barrier layer consisting of an organic, nitrogen- free, non-volatile, non-toxic polymer which is substantially water insoluble under conditions of use, said barrier layer having:
a. a thickness within the range of 5×10^{-4} to 0.5 micron,
b. a porosity within the range of 7,000 to 200,000 $cm^3/min/10\ cm^2$ per 10 cm water gauge, and
c. a permeability to molecules within the range of 5×10^{-4} to 2 microns,

said barrier layer being present at a coating level within the range of 0.1% to 8%, said coating level being designated as the weight of the coated carbon less the weight of the uncoated carbon divided by the weight of the uncoated carbon and expressed as a percentage.

4,062,369
DISPOSABLE RAIN AND WEATHER PROTECTOR
Terry Hermanson, c/o Mr. Christmas, Inc., 212 Fifth Ave., New York, N.Y. 10010
Filed June 24, 1976, Ser. No. 699,638
Int. Cl.^{2} A45B *13/00, 19/00*
U.S. Cl. 135—19.5 **20 Claims**

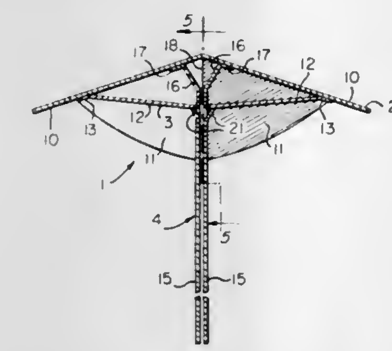

1. A disposable rain and weather protector comprising a canopy, a one-piece canopy support, handle means and lock means for the canopy support, said canopy having a periphery in the form of a closed geometrical figure and being provided with radial fold lines dividing the canopy into a plurality of panels and defining at least one pair of opposed panels and at least two other pairs of opposed panels, said at least one pair of opposed panels being fixedly secured to said canopy support, said at least two other pairs of opposed panels being secured to said first mentioned opposed panels along adjacent radial fold lines and extending above said canopy support when said canoy is in open position, said at least two other pairs of opposed panels extending freely above said canpy support and being otherwise unsecured thereto in the open position of said canopy, said first pair of opposed panels and said two other pairs of opposed panels all being supported by said canopy support when said canopy is in open position with support of said two other pairs of opposed panels being provided in their being secured to said first pair of panels, said handle means comprising generally vertically extending elements secured to said canopy and extending through an opening formed in said canopy support in slidable relationship therewith, said canopy support having a central fold line facilitating folding thereof, said handle elements being provided with said lock means for engaging said canopy support when the canopy is in open position and being movable into the plane of said handle elements when it is desired to close said canopy.

4,062,370
UMBRELLA COVER
George Brickner, 553 Lakeview Ave., Rockville Center, N.Y. 11570, and Paul P. Budoff, 17 Roosa Ave., Monticello, N.Y. 12701
Filed Mar. 26, 1976, Ser. No. 671,011
Int. Cl.^{2} A45B *25/18*
U.S. Cl. 135—33 C **4 Claims**

1. An umbrella cover comprising a sleeve of a pliable material having a closed extremity and an open extremity for receiving the canopy of an umbrella into the sleeve, said sleeve having a cut-out portion extending from said open extremity toward said closed extremity for a significant distance, and means on the cover for engaging lifting means for said cover, said engagement mean and cut-out portion being substantially in alignment with said closed extremity, whereby one can manipulate the cover onto the umbrella when the umbrella is upright by engaging the engagement means on the cover with the lifting means, lifting the cover by means of the lifting means

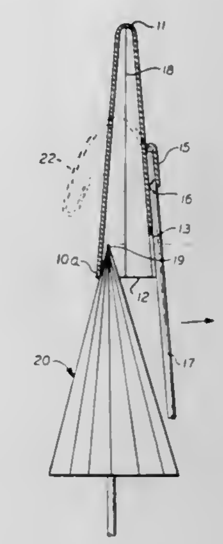

sufficiently to register the cut-out portion with a significant portion of the upper extremity of the umbrella, pulling the lifting means toward oneself to cause a portion of the cover opposite the cut-out portion to abut against said significant portion of the upper extremity of the umbrella thereby to spread the cover open and lowering the thus opened cover onto the umbrella by lowering the lifting means.

4,062,371
WALKING CANE
Lawrence A. Bolen, 500 E. 33rd, Apt. No. 700, Chicago, Ill. 60616
Filed May 19, 1976, Ser. No. 687,688
Int. Cl.^{2} A45B *3/04;* **F21V** *33/00*
U.S. Cl. 135—66 **4 Claims**

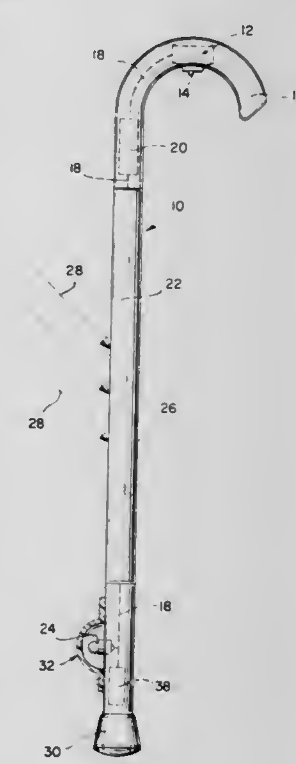

1. A walking cane comprising a rechargeable battery, light responsive means for electrically charging said rechargeable battery upon being exposed to light rays, a lamp, audible signalling means for electrically signalling the user that said rechargeable battery is in a charged condition and said lamp is electrically intact, switch means for selectively electrically allowing said rechargeable battery to energize said lamp and

said audible signalling means simultaneously and for allowing said rechargeable battery to energize said lamp.

4,062,372
ARTICULATED WALKING CANE
John G. Slusher, Jackson Heights, N.Y., assignor to The Raymond Lee Organization, Inc., New York, N.Y., a part interest
Filed June 29, 1976, Ser. No. 700,867
Int. Cl.² F16M *13/08*
U.S. Cl. 135—66 2 Claims

1. A cane fitted with retractable strut legs that are each pivotally joined to a lower section of the cane, said struts each fitted with pivotable brace means that extend the strut legs away from the lower section of the cane, when the bottom tip of the cane is pressed against a surface by the user, together with spring means that bias each strut to retract towards the cane, said bottom tip of the cane fixed to a member slidably telescopically extending from the said lower portion of the cane, and linked to said brace means.

4,062,373
METHOD AND APPARATUS FOR MIXING GASES
Justin S. Clark, 720 E. 3120 South, Salt Lake City, Utah 84106, and Wm. Dean Wallace, 408 Second Ave., Salt Lake City, Utah 84103
Continuation-in-part of Ser. No. 547,856, Feb. 7, 1975, Pat. No. 4,019,523. This application Apr. 25, 1977, Ser. No. 790,437
Int. Cl.² G05D *11/03, 11/13*
U.S. Cl. 137—3 10 Claims

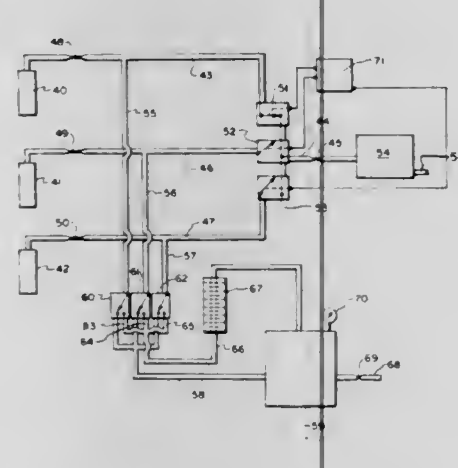

6. A method of mixing gases, which comprises the steps of
a. individually supplying the gases to be mixed from pressurized sources to a mixing chamber through a common restrictor, said gases being individually supplied from the pressurized sources at a rate above that at which they are supplied through the common restrictor to the mixing chamber;
b. supplying a portion of each said gas to be mixed, upstream of the common restrictor, to a pressurizing chamber to thereby provide a common pressure head to each of the gases; and
c. regulating the flow of each gas through the common restrictor according to a time that is proportionate to the desired concentration of the gas in the mixing chamber and flow ratios of the gases.

4,062,374
HYDRAULIC VALVES AND HYDRAULIC SYSTEMS
John Stephen Marshall, and John Frederick Dodd, both of Woking, England, assignors to Sperry Rand Limited, London, England
Continuation of Ser. No. 467,860, May 8, 1974, abandoned. This application Apr. 2, 1976, Ser. No. 673,310
Int. Cl.² F15B *13/04;* **G05D** *16/00*
U.S. Cl. 137—115 7 Claims

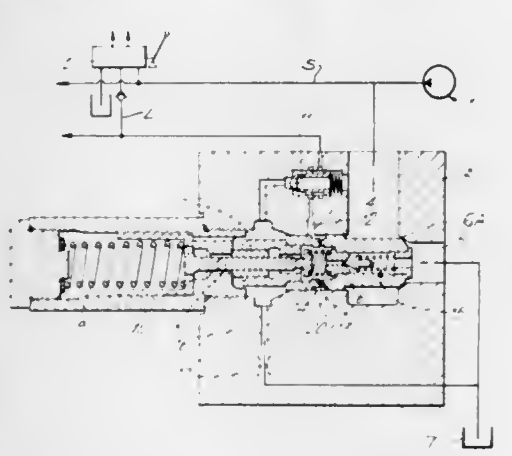

1. A combined compensator and off-loading valve for use with a system including a fixed displacement pump and a load-sensing line for sensing load pressure, comprising a valve body having a system pressure gallery for connection to a pump outlet, said body having a low pressure gallery for connection to a pump return line, said body having a load pressure gallery for connection to a load sensing line, said body including a valve seat between said system pressure gallery and said low pressure gallery, a plunger valve within said body adapted to engage said valve seat and providing communication when opened between said system pressure gallery and said low pressure gallery, said plunger having a greater cross-sectional area than the area of said valve seat, the differential area being adapted to be exposed in operation to system pressure, said plunger being hollow, a fixed abutment on said body, a sliding sleeve fitted within said plunger at the end opposite said valve seat and bearing against said fixed abutment, said sleeve having a cross-sectional area equal to said plunger differential area, a caged compensator spring on said valve body, a pin passing through said sleeve and bearing against said caged compensator spring and a light spring positioned between said pin and said plunger to urge said plunger against said valve seat, and connection means between the load-scanning gallery and the interior of said hollow plunger to transmit the load pressure to the interior of said plunger and on the end of said sleeve opposite said abutment and the end of said pin opposite the end which bears on said compensator spring such that the load pressure on said sleeve and said pin tends to move said plunger toward engagement with said seat and when the load pressure exceeds a predetermined value, the compensator spring is compressed, said plunger is moved by the pressure on said sleeve and the added pressure from the compression of said compensator spring to a position to maintain pressure in the system pressure gallery at a pressure equal to said predetermined pressure above said load pressure.

4,062,375
TAMPER PROOF LOCK
Francis R. Byrnes, Philadelphia, Pa., assignor to Center Compression Lock Company, Philadelphia, Pa.
Filed June 18, 1976, Ser. No. 697,581
Int. Cl.² E03B *9/06;* **F16K** *35/06*
U.S. Cl. 137—296 11 Claims

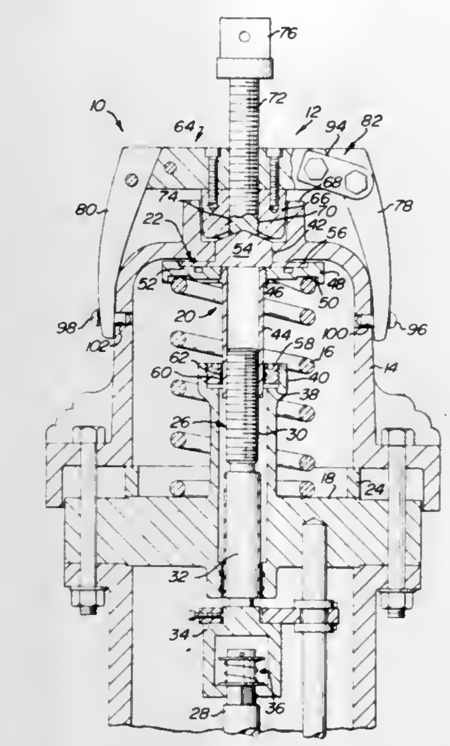

1. In a fire hydrant including a bonnet having an aperture, a housing having an internal chamber, a threaded operating rod extending within the housing chamber coupled to a yoke, and a plunger coupled to the yoke for opening and closing a valve, a tamperproof lock comprising:
a spring mounted at one end on a housing;
power transmitting means threadedly mounted on a threaded operating rod extending within a housing chamber for transmitting power to said threaded rod againt said spring; and
a swivel plate freely mounted on said power transmitting means for rotational movement thereon, said swivel plate having a contoured hub portion adapted to fit within a bonnet aperture, said hub portion being exposed to the exterior of the bonnet.

4,062,376
SERVICE CONNECTION BETWEEN A MAIN AND A METER IN A BUILDING AND METHOD OF AND EQUIPMENT FOR INSTALLING THE SAME
Robert L. McGrath, Hollis St., East Pepperell, Mass. 01437
Filed Sept. 5, 1975, Ser. No. 610,565
Int. Cl.² F16K *23/00*
U.S. Cl. 137—312 1 Claim

1. A service connection between an underground water main outside a building and an above ground shut-off valve within the building, said main including a valve controlled outlet, said connection comprising a flexible leakage conduit extending underground from the main through the wall of the building with an end above ground adjacent said shut-off valve and having a bend between its extremities, a flexible plastic service conduit extending freely and slidably through said leakage conduit, releasable means placing the respective ends of the service conduit in communication with the valve controlled outlet and the shut-off valve, means sealing the respective ends of said leakage conduit to said main and to one end of said service conduit adjacent the shut-off valve, the means sealing the leakage conduit to the main including a vertical casing in the lower end of which the outlet is contained and the upper end of which extends to the surface of the ground, whereby when the means sealing the leakage conduit to the main and the service conduit are released and when the releasable means at both ends of said service conduit are released, said service conduit can be pulled through the leakage conduit and replaced from either end thereof, and an outlet conduit with one end in communication with the end of the leakage

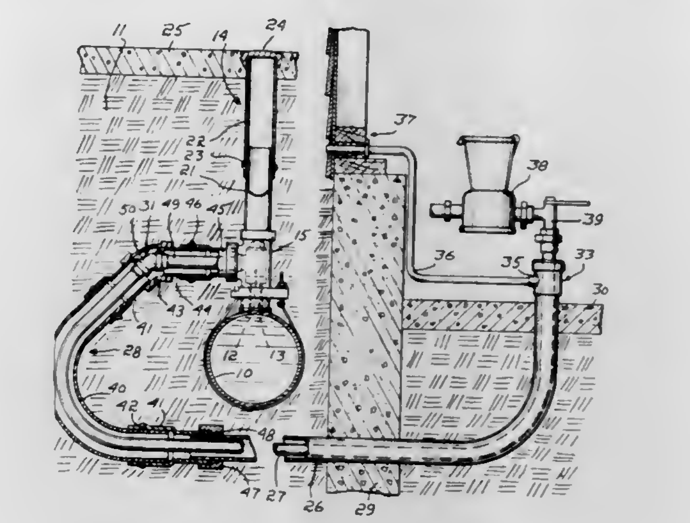

conduit adjacent said shut-off valve and extending through said wall with the other end thereof above ground outside the building.

4,062,377
PNEUMATIC RETARD HAVING STROKE-ACCELERATING VALVE
David M. Ward, La Jolla, Calif., assignor to Potter Electric Signal Co., St. Louis, Mo.
Division of Ser. No. 430,203, Jan. 2, 1974, Pat. No. 3,912,247. This application June 30, 1975, Ser. No. 591,871
Int. Cl. F16k *15/00*
U.S. Cl. 137—523 2 Claims

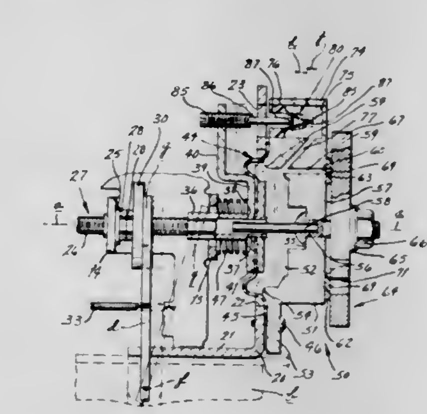

1. A combined check valve and pressure dump valve for a gas whose pressure may range from below to above an ambient pressure, comprising
a walled chamber having gas passage means whereby to communicate gas pressure and having in addition thereto a gas conducting opening,
a flexible rubber-like check valve mounted in said opening, said check valve there having a circumferential mounting flange by which it supported, and a mouth portion including lip portions extending therefrom and whose inner surfaces taper from said mouth portion toward each other for normal flatwise presentation againsteach other,
whereby to part and thereby permit gas flow into said chamber on a deficiency of pressure therein below such ambient gas pressure and to seal together on excess of chamber pressure over such ambient pressure, in combination with
a release pin whose cross section is sufficiently small, relative to the size of said lip portions, to distend and part them from each other without sealing about said pin, and
means to insert said pin from outside the pressure chamber through the mouth portion of said check valve and inwardly between the tapering inner surfaces of said lip portions,

whereby to distend and part same, thereby to suddenly dump and discharge any excess of chamber pressure over ambient pressure.

4,062,378
EASILY DISASSEMBLED, ONE-WAY CHECK VALVE
Lloyd F. Bender, Hayward, Wis., assignor to Bender Machine Works, Inc., Hayward, Wis.
Filed Sept. 27, 1976, Ser. No. 727,280
Int. Cl.² F16K *15/06*
U.S. Cl. 137—535 6 Claims

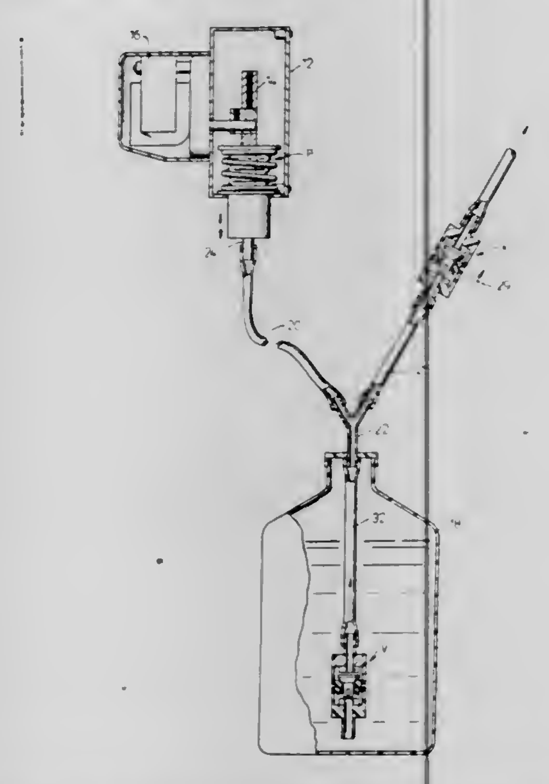

1. A quickly disassembled and assembled multi-part one-way check valve comprising, identical end sections formed of resilient material and each having a conduit attaching nipple at one end, a passage therethrough and each also having a generally cylindrical wall at the other end so as to define a generally cup-shaped end section; a central valve guide having a central aperture therethrough which defines a valve seat; inter-engaging means between opposite ends of said guide and said walls of said end sections, said inter-engaging means forming a quickly detachable snap-fit connection between said end sections and said guide, said end sections being spaced apart when assembled on said guide to thereby permit insertion therebetween of a blade-like tool for disengaging said end sections from said guide, said end sections and said guide together defining an interior chamber; a shiftable valve element mounted in said chamber and in said aperture of said guide for axial shifting between valve closed and valve open positions, said element adapted to abut against said guide seat when said valve is in said closed position, said element having resilient means abutting against said guide and for urging said element towards a valve closed position.

4,062,379
SAFETY VALVE CONTROL SYSTEM FOR PRODUCTION WELL
Edward R. Clinton, Anchorage, Alaska, assignor to Dowland-Bach Corporation, Anchorage, Alaska
Filed Apr. 30, 1976, Ser. No. 682,040
Int. Cl.² F16K *31/12*
U.S. Cl. 137—565 8 Claims

1. In a safety system for closing a primary valve disposed in the flow path of a primary fluid, in response to an indication of an undesirable condition from a monitoring device, the opening and closing of the primary valve being controlled by the pressure of an operating fluid supplied thereto, the system being composed of input means arranged to be connected to the monitoring device to receive therefrom an indication of the condition being monitored, output means arranged to supply operating fluid to the primary valve, valve means connected with the output means for controlling the pressure of the operating fluid at the output means, and fluid-responsive operator means having an input operatively associated with the input means for receiving a control fluid, the operator means being connected to the valve means for switching the valve means between a state which causes the pressure at the output to effectuate opening of the primary valve and a state which causes the pressure at the output to effectuate closing of the primary valve, the pressure of the control fluid at the operator means when an indication of an undesirable condition is present at the input means having a value which causes the operator means to switch the valve means into the state which causes the operating fluid pressure at the output means to effectuate closing of the primary valve, the improvement wherein: said system comprises conduit means connected to establish direct fluid communication between said operator means input and said input means, such that control fluid is

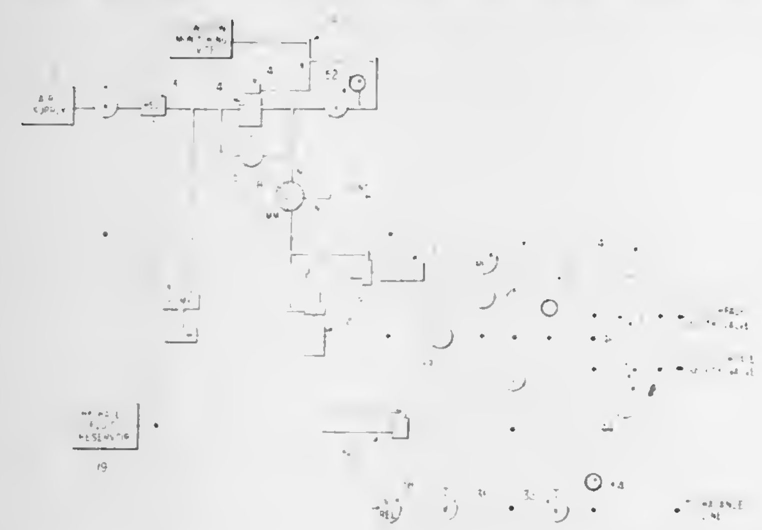

present at said input means; the control fluid pressure at said input means is determined by the indication received from the monitoring device; said operator means are arranged to switch said valve means into the state which results in closing of the primary valve when the control fluid pressure at said operator means input corresponds to the control fluid pressure created at said input means when an indication of an undesirable condition is received from the monitoring device; said system further comprises an operating fluid supply having a high pressure output providing operating fluid at a pressure sufficient to effectuate opening of the primary valve and having a low pressure input presenting a pressure sufficient to effectuate closing of the primary valve; and said valve means comprises a valve unit connected between said output means and said operating fluid supply and being switchable, under control of said operator means, between a first state in which said high pressure output is connected to said output means and a second state in which said low pressure input is connected to said output means.

4,062,380
HOSE CONSTRUCTION
Anatoli Hofle, Candler, N.C., assignor to Dayco Corporation, Dayton, Ohio
Filed Oct. 28, 1976, Ser. No. 736,650
Int. Cl.² F16L *11/04*
U.S. Cl. 138—122 20 Claims

1. A flexible convoluted hose construction comprising, an elongated single-piece elastomeric strip having a base and first and second connecting means extending in the same direction from said base, said first connecting means extending from a central part of said base to define a lateral extension of said base outwardly of said first connecting means and said second connecting means extending from an end portion of said base, said strip being disposed in a helical pattern with said first and second connecting means connected to define said hose construction having a plurality of helical turns defining alternating

crests and troughs, said lateral extension in each helical turn of said strip slideably engaging said base beneath said second connecting means in underlapping relation to provide said hose construction with a substantially smooth inside surface, said

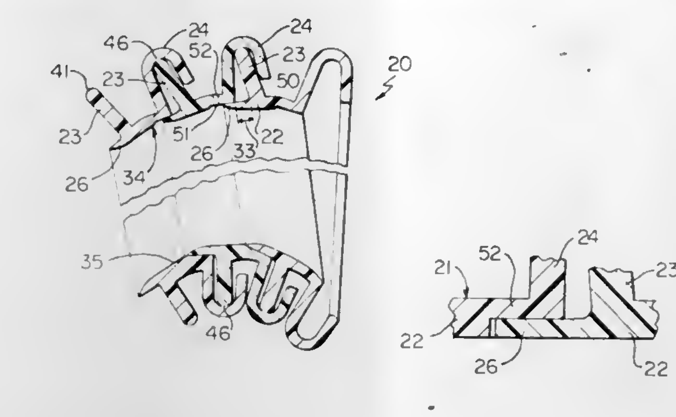

smooth inside surface being provided even with said hose construction extending in a curved path due to said lateral extension slideably engaging said base portion and bridging any gap which would otherwise be produced in said inside surface along an outer radius of said curved path.

4,062,381
REPAIR PART FOR MAGAZINE TIP GUIDE OF LOOM WINDER
James T. Blakely, Laurens, S.C., assignor to Blakely Industries, Greenville, S.C.
Filed Nov. 26, 1976, Ser. No. 744,921
Int. Cl.² D03D *45/00, 45/26*
U.S. Cl. 139—224 A 3 Claims

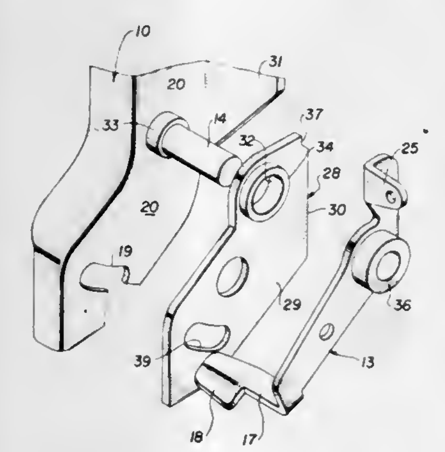

1. In an automatic loom filling winder having a magazine tip guide for quills, a quill tip support rockably mounted on the magazine tip guide, the tip guide having a slot receiving a moving extension of the quill tip support and one end of the slot tending to break away due to repeated impacts of said extension thereon, the magazine tip guide also having a pivot shaft for the support of said rockable quill tip support projecting from the outer side thereof and having an abutment flange for the rockable quill tip support spaced from one side of said pivot shaft, the improvement comprising a repair plate for said magazine tip guide the use of which obviates the necessity of replacing the tip guide after breaking away of said one end of the slot, said repair plate intervened between the outer side of the magazine tip guide and the rockable quill tip support, said repair plate having a support opening near one end thereof receiving said pivot shaft and having a slot near the other end thereof and spaced from said support opening and being in registration with the broken away slot of the magazine tip guide, and said repair plate having a straight edge portion spaced from one side of the support opening and engaging said rear abutment flange in parallel relation to the flange and resisting rotation of the repair plate around the axis of said support opening.

4,062,382
EXTENDING CARRIER FOR LOOMS WITH REMOVAL OF THE FILLING YARN FROM STATIONARY BOBBINS
Willy Rohr, Hinwil, and Lothar Kohler, Tann-Rüti, both of Switzerland, assignors to Ruti Machinery Works Ltd., Ruti, Switzerland
Filed Sept. 23, 1976, Ser. No. 726,006
Claims priority, application Switzerland, Sept. 24, 1975, 12385/75; May 25, 1976, 6549/76
Int. Cl.² D03D *47/18*
U.S. Cl. 139—448 5 Claims

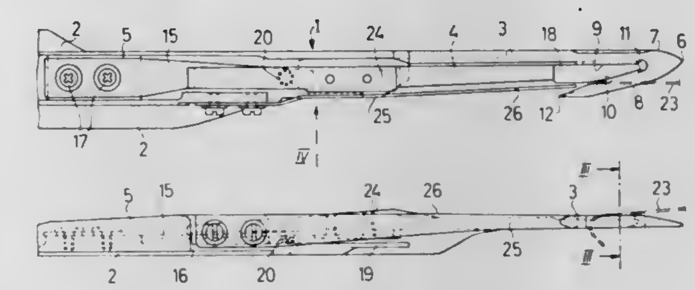

1. Extending carrier for looms with removal of the filling yarn from stationary bobbins, said carrier having a hook with a clamping tongue swingable perpendicular to the plane of the hook, a control surface being developed on said clamping tongue, said carrier having further a deflection edge for keeping the warp yarns away from the control surface, said deflection edge arranged on the side surface of said carrier which faces the point of formation of the shed, and the point of the structural part which bears the deflection edge extending into the mouth of the hook.

4,062,383
BAG TYING APPARATUS
Takashi Saito, Ueda, Japan, assignor to Meiko Commerce Co., Ltd., Tokyo and Nagano Technical Service Co., Ltd., both of, Japan
Filed Feb. 10, 1977, Ser. No. 767,458
Claims priority, application Japan, Feb. 15, 1976, 51-16361[U]; Apr. 22, 1976, 51-46179
Int. Cl.² B21F *7/00, 15/00*
U.S. Cl. 140—93 A 12 Claims

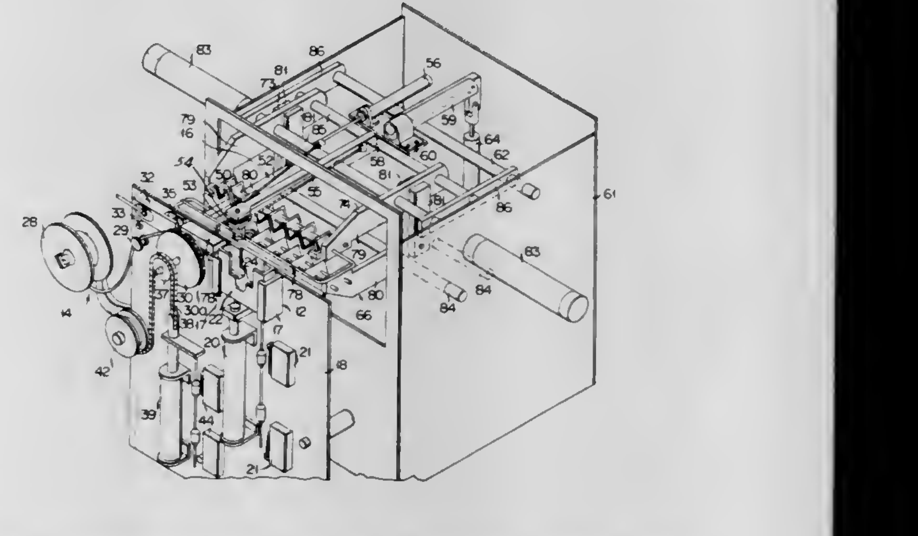

1. Bag tying apparatus for tying up a gathered neck of a bag with a tie, comprising:
- a tie wrapping plate moveable linearly over a predetermined stroke and having a stepped groove extending in the moving direction of the wrapping plate, the stepped groove having a narrow section for receiving a gathered neck of a bag, and an elongated recess running across the stepped groove, the elongated recess having a bottom on which to receive a tie material;
- a pleating mechanism disposed above and behind said wrapping plate in the moving direction thereof and for clamp-

ing the open end of the bag into pleats and for then gathering the pleated open end of the bag into a gathered neck,

a cutter disposed on one side of said wrapping plate and being movable together with said wrapping plate so as to cut a tie of a predetermined length from said tie material on said bottom of said elongated recess during the initial stage of the moving stroke of said wrapping plate, said tie being bent into a U-shape as the gathered neck of the bag comes into said narrow section of the stepped groove during the final stage of the moving stroke of said wrapping plate; and

a tie twisting mechanism arranged above said wrapping plate, said tie twisting mechanism including a twist shaft which is rotatable but immovable in the axial direction thereof, said twist shaft having upper and lower end portions, a pair of twist hooks secured to a lower end portion of the twist shaft and engageable with the ends of the U-shaped tie, and a toothed disc secured to the upper end portion of the twist shaft, the twist hooks being adapted to twist the ends of the U-shaped tie when the toothed disc is rotated, to thereby tie up the gathered neck of the bag.

4,062,384
VAPOR RECOVERY ADAPTER FOR GASOLINE-DISPENSING NOZZLES
Bradley K. Frahm, Stockton, and William E. Watson, Fair Oaks, both of Calif., assignors to Ames Company, Sacramento, Calif.
Filed July 2, 1976, Ser. No. 702,014
Int. Cl.² B65B *31/06*
U.S. Cl. 141—46 **5 Claims**

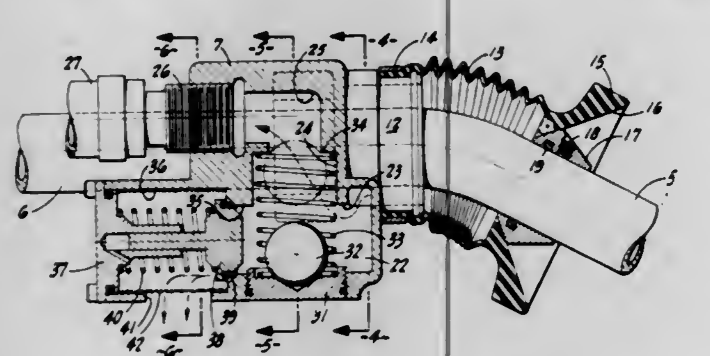

1. A vapor recovery device comprising—in connection with a fuel-dispensing nozzle coupled to a fuel supply hose and associated with a vapor return hose, and having a forwardly projecting spout—a vapor-conducting neck freely surrounding a portion of the spout, the neck having a forwardly opening mouth adapted to seal with a fuel tank filler neck upon projection of the spout thereinto, a nozzle-supported housing having a vapor flow passage therethrough, means connecting the rear end of the vapor-conducting neck to said housing in communication with one end of such vapor flow passage, means to connect the opposite end of said passage in communication with the vapor return hose, and a check valve in the vapor flow passage, the check valve being normally open for vapor flow through said passage but automatically closing in response to liquid flow therein, such check valve being of floatable type including a ball, a ball-receiving seat in vapor flow passage, the ball normally being remote from the seat but floating into engagement there-with upon such liquid flow in said passage; there being a liquid fuel escape port in the housing, a separate passage leading from such escape port to said vapor flow passage at a point upstream relative to the check valve, a separate valve in the housing between said passages, and means normally but yieldably closing the separate valve; the check valve first closing, by the ball floating into engagement with the seat, in response to liquid fuel flow in the vapor flow passage, and said separate valve the sequentially opening in response to said liquid fuel flow in said vapor flow passage and attendant closing of the check valve, whereupon the liquid fuel flow spills from such escape port.

4,062,385
TONER HANDLING APPARATUS
Jerome Mark Katusha, Saratoga, Calif., and Stephen James Flamini, Rochester, N.Y., assignors to Eastman Kodak Company, Rochester, N.Y.
Filed Mar. 14, 1975, Ser. No. 558,522
Int. Cl.² B65D *1/06, 43/02*
U.S. Cl. 141—89 **3 Claims**

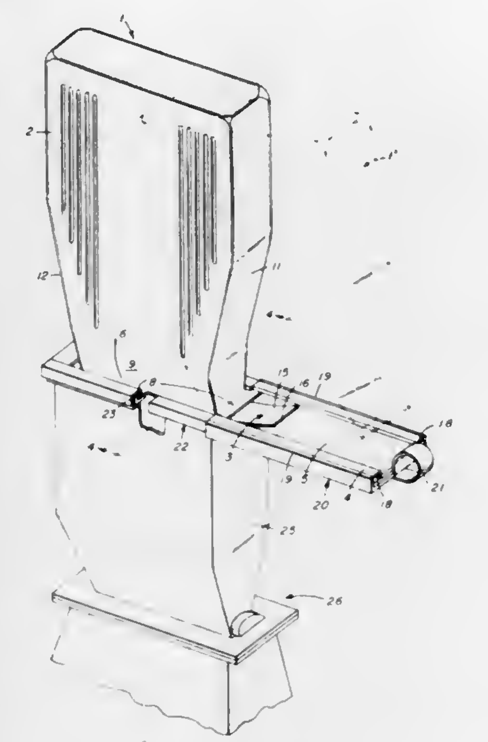

1. An interface device for (a) a toner container in which is contained a quantity of toner and (b) a toner dispensing mechanism which receives toner from the toner container and dispenses the toner in metered quantities to the image development area in an electrophotographic copier, the toner container having strippable means separable therefrom to effect a toner exit opening in the container and having wiping means removable from the container to a given position for wiping any residual toner from the strippable means as it is separated from the container, said interface device comprising:

means for receiving such a toner, together with the wiping means, and engaging the wiping means in its given position while enabling the toner container to be removed from the wiping means; and

means for receiving the toner container, removed from the wiping means, and engaging it in a fixed position which enables toner to drain from the removed container into such a toner dispensing mechanism and which enables the strippable means to move in wiping contact with the wiping means as the strippable means is separated from the removed container.

4,062,386
METHOD AND APPARATUS FOR THE DOSING OF DENSE PASTY SUBSTANCES
Luciano Zanasi, Bologna, Italy, assignor to Zanasi Nigris S.p.A., Ozzano Emilia, Italy
Filed Apr. 1, 1976, Ser. No. 672,538
Claims priority, application Italy, Apr. 7, 1975, 12556/75
Int. Cl.² B67C *3/00, 3/26*
U.S. Cl. 141—258 **3 Claims**

1. An apparatus for the dosing of dense pasty semisolids, particularly for the filling of gelatin capsules with such substances comprising means for forming a layer of substance having a uniform density and thickness, at least a hollow punch having a cavity, means for lowering the hollow punch so as to dip into said layer and for lifting it from said layer whereby the hollow punch removes in its cavity a predetermined dose of substance, means for transporting said hollow punch carrying said dose into registration with a gelatin capsule to be filled, and ejector means operable to discharge said dose from the

hollow punch into the gelatin capsule, and said means for forming said layer having a uniform density and thickness comprising an extrusion press which extrudes a continuous

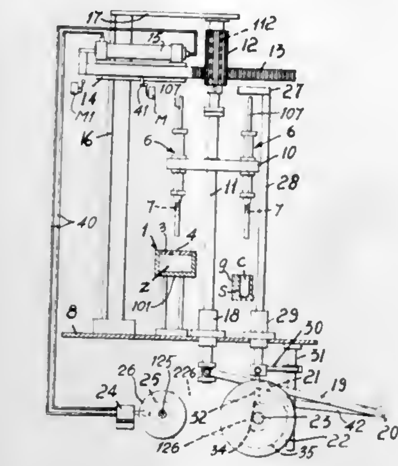

flow of said substance through a channel having two parallel walls, and one of said walls having at least one through bore through which the hollow punch can be inserted into the extruded substance.

4,062,387
DISPOSABLE FUNNEL APPARATUS
Hector Peniche, 3255 Steinway St., Long Island City, N.Y. 11103
Filed July 8, 1976, Ser. No. 703,289
Int. Cl.² B65B *39/00*
U.S. Cl. 141—337 **9 Claims**

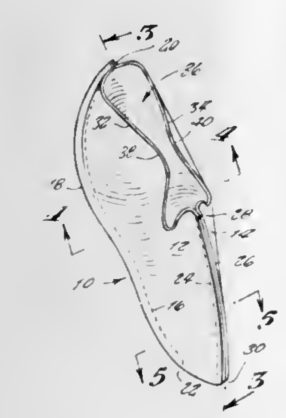

1. A disposable funnel comprising a pair of sheets, said sheets having a pair of outermost surfaces thereof disposed in overlying relationship to each other, said pair of outermost surfaces having congruent marginal edges, said marginal edges defining a pair of innermost surfaces, said innermost surfaces being disposed in touching engagement to each other, a first portion of one of said innermost surfaces fixedly secured to a first portion of the other of said innermost surfaces, said first portion of said one innermost surface and said first portion of said other innermost surface disposed adjacent a first portion of said marginal edges, a second portion of said one innermost surface fixedly secured to a second portion of said other innermost surface, said second portion of said one innermost surface and said second portion of said other innermost surface disposed adjacent a second portion of said marginal edges, a third portion of said marginal edges, a fourth portion of said marginal edges, one end of said first portion of marginal edges being disposed adjacent one end of said third portion of marginal edges, the other end of said third portion of marginal edges being disposed adjacent one end of said second portion of marginal edges, the other end of said first portion of marginal edges being disposed adjacent one end of said fourth portion of marginal edges, the other end of said fourth portion of marginal edges being disposed adjacent said other end of said second portion of marginal edges, said third portion of marginal edges defining a collecting mouth, said fourth portion of marginal edges defining a dispensing mouth, said marginal edges defining a substantially elongated shape, said dispensing mouth being disposed on one side of said elongated shape adjacent the other end thereof.

4,062,388
INSTALLATION TOOL APPARATUS
Charles J. DeCaro, Marshfield, Mass., assignor to Textron Inc., Providence, R.I.
Division of Ser. No. 632,676, Nov. 17, 1975, Pat. No. 4,018,254. This application Dec. 29, 1976, Ser. No. 755,248
Int. Cl.² B25B *23/10*
U.S. Cl. 144—32 R **4 Claims**

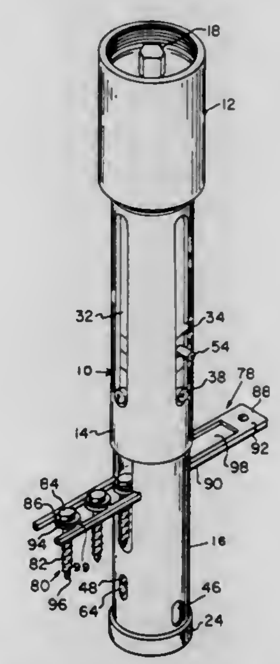

1. In a driver having a barrel with a wall to define a barrel bore to accommodate fasteners positioned therein and driven therethrough, the improvement comprising a carriage assembly including a sleeve slidably positioned in the barrel bore near the end thereof and having spaced slots therethrough; means pivotally connected in the slots and extending into the bore to center and hold a fastener therein, said sleeve movable from a first position wherein the pivotal means are rigidly held from pivoting by engagement with the barrel wall; and a second position wherein the means are aligned with openings through the barrel wall to permit pivotal movement so that the fastener can pass therethrough.

4,062,389
SCREW APPLICATOR
Sixten H. Lejdegard, Ramnas, Sweden, assignor to Bulten-Kanthal AB, Sweden
Filed Feb. 3, 1976, Ser. No. 654,785
Claims priority, application Sweden, Feb. 3, 1975, 7501171
Int. Cl.² B25B *23/00*
U.S. Cl. 144—32 R **14 Claims**

1. A power-driven screw driver for use with a strip of screws, comprising:

a. a body engageable with a workpiece;
b. a plunger member slidably disposed in said body;
c. a return spring normally acting between and biasing said body and said plunger member apart;
d. power-drive means carried on said plunger outside of said body;
e. a screwdriver tool rotatably carried on said plunger and adapted to be driven by said power-drive means;
f. guide means on said body for guiding a strip of screws successively into alignment with said screwdriver tool;
g. a bellcrank pivoted on said body and having (1) a feed arm carrying a spring engageable with the strip of screws for advancing it incrementally, and (2) a drive arm;
h. a first projection on said plunger member engageable with said drive arm near the end of a screw driving stroke;

i. a pawl pivoted on said body and having a hook for locking said bellcrank in a cocked position;

j. a feed spring acting between said pawl and said bellcrank, and held in a loaded position by engagement of said hook with said bellcrank; and

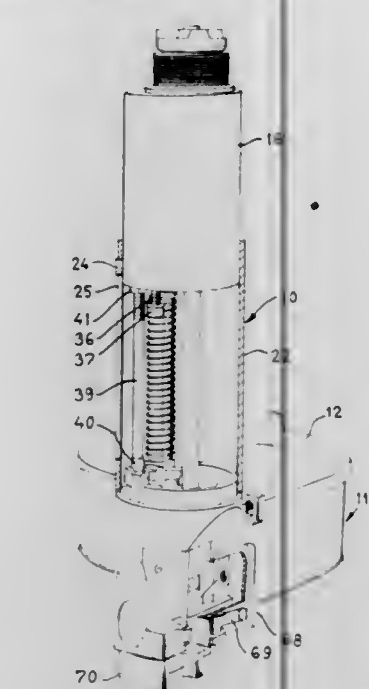

k. a second projection on said plunger member engageable with said pawl to effect unlocking thereof near the end of a retracting stroke of said plunger member.

4,062,390
ARRANGEMENT FOR CUTTING A WORKPIECE
Gerald Beekenkamp, Etobicoke, Canada, assignor to The Black and Decker Manufacturing Company, Towson, Md.
Filed Aug. 12, 1976, Ser. No. 713,631
Int. Cl.[2] B27C *5/02, 5/10*
U.S. Cl. 144—134 D **31 Claims**

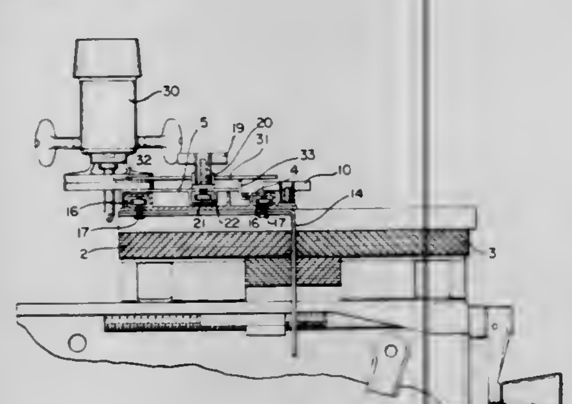

1. An arrangement for cutting a workpiece with a portable tool such as a circular saw, router or the like comprising:

a supporting structure;

a pair of elongated vise members mounted on said supporting structure and disposed in side by side relation to each other, said vise members defining a substantially smooth upper surface upon which the workpiece can be placed and at least one of said vise members being mounted on said supporting structure so as to be movable relative to the other one of said vise members;

an elongated track member defining a cutting path;

clamping means for adjusting said one movable vise member toward or away from the other one of said vise members to clamp said track member therebetween;

an elongated workpiece guide arm pivotally mounted to said track member for angularly positioning the workpiece in said path defined by said track member;

a mounting sled slideably engaging said track member for movement therealong and being adapted to receive the portable tool thereon so as to cause the cutting element of the tool to be movable with said sled along said path and into the workpiece; and

supporting means insertable between said vise members for supporting said track member in spaced relation above said vise members, said track member, said guide arm and said vise members conjointly defining partially bounded space wherein the workpiece can be held with respect to said cutting path.

4,062,391
SAFETY GUARD
Vincent Piazzola, 217 Faithway Drive, Seffner, Fla. 33584
Filed Nov. 11, 1976, Ser. No. 740,811
Int. Cl.[2] B27G *21/00*
U.S. Cl. 144—251 A **6 Claims**

1. A safety guard for use with a woodworking machine, said safety guard comprising an enclosure to substantially enclose the cutting tool of the woodworking machine, said enclosure comprising a substantially horizontal base plate, a substantially vertical pressure plate extending downwardly from the outer edge of said substantially horizontal base plate and a pair of end plates attached to opposite ends of said base plate and said pressure plate, said substantially vertical pressure plate having an elongated pressure member formed on the lower portion thereof, said elongated pressure member comprises a plurality of interrupted teeth being held in fixed spaced relation relative to the woodworking machine to engage the workpiece along the direction of travel during operation.

4,062,392
DOUBLE HANDLED BAG - FOLDABLE TO TWO SIZES
Kitae Ishii, Tokyo, Japan, assignor to Merril Hermanson, New York, N.Y.
Filed Apr. 14, 1977, Ser. No. 787,652
Int. Cl.[2] A45C *3/04*
U.S. Cl. 150—1.7 **9 Claims**

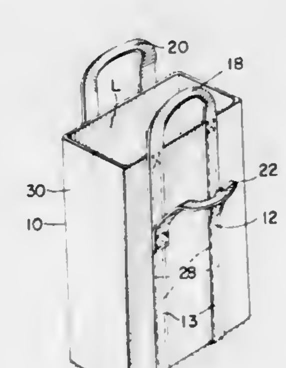

1. An improved bag and handle construction comprising:

a. a bag formed from a single piece of material in sleeve form, having a single generally vertically extending seam securing generally vertically extending abutting edges of said bag, a closed bottom section with horizontal edges stitched together and gusset members formed on opposite ends of the bottom section by stitching extending transversely to the stitches of the horizontal edges, said bag being inverted so that all seams appear in the interior thereof; and

b. a handle assembly formed from a single piece strap with superimposed ends stitched to each other to provide an endless elongate closed loop having a pair of generally parallel strips terminating in a pair of spaced apart loop ends, said loop ends constituting a first set of handles for said bag, and a second set of handles of inverted U-shape configuration with downwardly directed ends adhered to said closed loop intermediate the loop ends thereof;

c. said handle assembly extending with said generally parallel strips along two opposite exterior sides of said bag, around the bottom thereof and being stitched to said bag and said loop ends projecting above the top of said bag, said second set of handles extending intermediate the top and the bottom of said bag;

d. said bag including an upper portion above said second set of handles being foldable into the interior of said bag whereby said second set of handles will become functionable.

4,062,393
PNEUMATIC TIRE
Marcel J. Bertrand, Grivegnee-Liege, Belgium, assignor to Uniroyal AG, Aachen, Germany
Filed Mar. 13, 1974, Ser. No. 451,669
Int. Cl.[2] B60C *9/18*
U.S. Cl. 152—361 R **16 Claims**

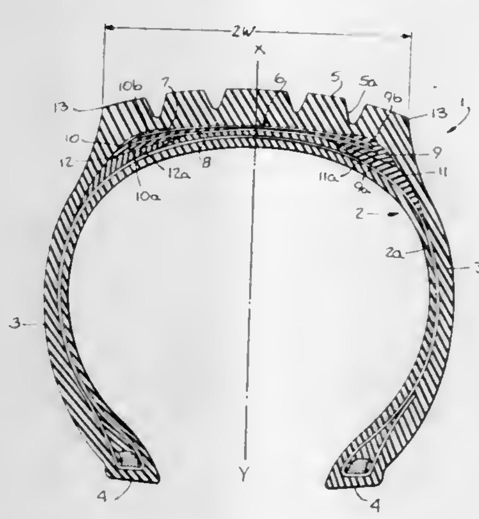

1. A pneumatic tire comprising:

a carcass;

a tread overlying the crown region of the carcass;

a tread reinforcing belt interposed between said tread and said crown region of said carcass in circumferentially surrounding relation to the latter, said belt including a plurality of plies of belt cords;

at least one circumferentially extending rubber body interposed between said tread and said carcess, said body covering the radially inward marginal portions and the edges of said belt; and

at least one circumferentially extending rubber pad positioned radially inward of said rubber body and radially outward of said carcass,

the Shore A hardness of said rubber body being different from the Shore A hardness of said tread and being greater than the Shore A hardness of said rubber pad.

4,062,394
SHUTTER DEVICE
Leif P. R. Anderson, Bogatan 39 A, S-412 72 Goteborg, and Lars Gunnar Serneblad, Nordostpassagen 22, S-413 11 Goteborg, both of Sweden
Filed Aug. 2, 1976, Ser. No. 710,675
Claims priority, application Sweden, Feb. 4, 1975, 7501187
Int. Cl.[2] E06B *9/30*
U.S. Cl. 160—172 **1 Claim**

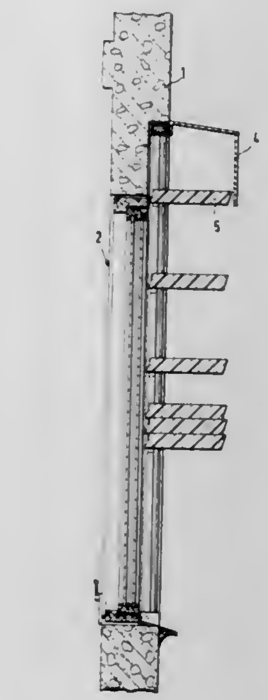

1. A shutter device for adjustable shielding a surface, including a window surface, which comprises a plurality of shielding slats and operating means for individually and collectively positioning the same over the shielded surface, said slats being pivotable about their longitudinal axes for positioning the same in different predetermined angular positions to provide the desired shielding of said surface, guide rails disposed on each end of said slats, and carrying a plurality of paired runner units each connected to a corresponding slat by means of pivoting shafts so that the slats are pivotable relative the runner units, the guide rails provided with means adapted to retain the slats in individual positions distributed over the shielded surface, said retaining means comprising for each slat first supporting means provided on each runner unit and second supporting means provided in each guide rail, the second supporting means being situated in the transverse direction of its respective guide rail such that each is in the path of movement of the individually placed first supporting means and so situated in the longitudinal direction of the respective guide rail that each slat is in its predetermined individual position when the respective first supporting means is resting on the corresponding second supporting means of the rail, said guide rails being substantially closed units each having a single longitudinal slot for said pivoting shafts and providing box-shaped areas in which the runner units are guided, said areas defined by two opposite short walls, each short wall having a plurality of inwardly extending longitudinal grooves, said first supporting means comprising a plurality of projections on the runner units, at least one said projection being provided for each slat to individually position the same in a predetermined groove in the rails, which groove is provided with a stop for the respective first supporting means situated in the groove to hold the corresponding slat in its predetermined position when the supporting means carried by its corresponding runner unit abuts said stop, said operating means being enclosed by the guide rails and comprising a threaded spindle pivotably mounted in each of the two guide rails, on which spindle each of the runner units is connected for longitudinal displacement, said operating means further comprising a bar pivotably mounted in at least one of the guide rails and operatively connected to worm gears displaceable but not pivotable with respect to said bar, which gears are pivotably carried in respec-

being inverted so that all seams appear in the interior thereof; and

b. a handle assembly formed from a single piece strap with superimposed ends stitched to each other to provide an endless elongate closed loop having a pair of generally parallel strips terminating in a pair of spaced apart loop ends, said loop ends constituting a first set of handles for said bag, and a second set of handles of inverted U-shape configuration with downwardly directed ends adhered to said closed loop intermediate the loop ends thereof;

c. said handle assembly extending with said generally parallel strips along two opposite exterior sides of said bag, around the bottom thereof and being stitched to said bag and said loop ends projecting above the top of said bag, said second set of handles extending intermediate the top and the bottom of said bag;

d. said bag including an upper portion above said second set of handles being foldable into the interior of said bag whereby said second set of handles will become functionable.

4,062,393
PNEUMATIC TIRE

Marcel J. Bertrand, Grivegnee-Liege, Belgium, assignor to Uniroyal AG, Aachen, Germany
Filed Mar. 13, 1974, Ser. No. 451,669
Int. Cl.² B60C *9/18*
U.S. Cl. 152—361 R **16 Claims**

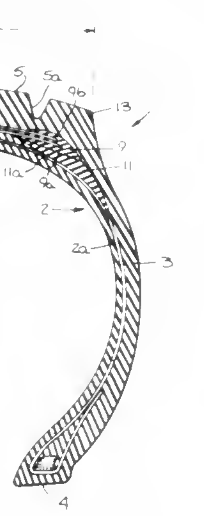

1. A pneumatic tire comprising:
a carcass;
a tread overlying the crown region of the carcass;
a tread reinforcing belt interposed between said tread and said crown region of said carcass in circumferentially surrounding relation to the latter, said belt including a plurality of plies of belt cords;
at least one circumferentially extending rubber body interposed between said tread and said carcess, said body covering the radially inward marginal portions and the edges of said belt; and
at least one circumferentially extending rubber pad positioned radially inward of said rubber body and radially outward of said carcass,
the Shore A hardness of said rubber body being different from the Shore A hardness of said tread and being greater than the Shore A hardness of said rubber pad.

4,062,394
SHUTTER DEVICE

Leif P. R. Anderson, Bogatan 39 A, S-412 72 Goteborg, and Lars Gunnar Serneblad, Nordostpassagen 22, S-413 11 Goteborg, both of Sweden
Filed Aug. 2, 1976, Ser. No. 710,675
Claims priority, application Sweden, Feb. 4, 1975, 7501187
Int. Cl.² E06B *9/30*
U.S. Cl. 160—172 **1 Claim**

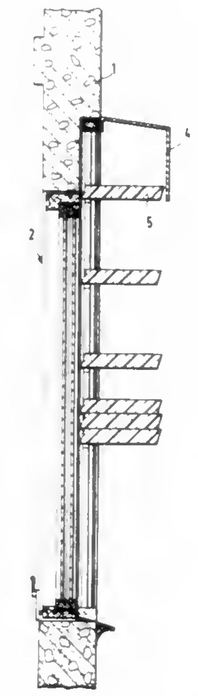

1. A shutter device for adjustable shielding a surface, including a window surface, which comprises a plurality of shielding slats and operating means for individually and collectively positioning the same over the shielded surface, said slats being pivotable about their longitudinal axes for positioning the same in different predetermined angular positions to provide the desired shielding of said surface, guide rails disposed on each end of said slats, and carrying a plurality of paired runner units each connected to a corresponding slat by means of pivoting shafts so that the slats are pivotable relative the runner units, the guide rails provided with means adapted to retain the slats in individual positions distributed over the shielded surface, said retaining means comprising for each slat first supporting means provided on each runner unit and second supporting means provided in each guide rail, the second supporting means being situated in the transverse direction of its respective guide rail such that each is in the path of movement of the individually placed first supporting means and so situated in the longitudinal direction of the respective guide rail that each slat is in its predetermined individual position when the respective first supporting means is resting on the corresponding second supporting means of the rail, said guide rails being substantially closed units each having a single longitudinal slot for said pivoting shafts and providing box-shaped areas in which the runner units are guided, said areas defined by two opposite short walls, each short wall having a plurality of inwardly extending longitudinal grooves, said first supporting means comprising a plurality of projections on the runner units, at least one said projection being provided for each slat to individually position the same in a predetermined groove in the rails, which groove is provided with a stop for the respective first supporting means situated in the groove to hold the corresponding slat in its predetermined position when the supporting means carried by its corresponding runner unit abuts said stop, said operating means being enclosed by the guide rails and comprising a threaded spindle pivotably mounted in each of the two guide rails, on which spindle each of the runner units is connected for longitudinal displacement, said operating means further comprising a bar pivotably mounted in at least one of the guide rails and operatively connected to worm gears displaceable but not pivotable with respect to said bar, which gears are pivotably carried in respec-

tive runner units in the guide rails, and sealing means arranged between the guide rails and the slats and between each slat.

4,062,395
METHOD OF CASTING AN ASSEMBLY OF ARTICULATABLE COMPONENTS
Emil Sirmay, R.D. 1, Box 100-17, Lafayette, N.J. 07848
Filed Aug. 13, 1975, Ser. No. 604,106
Int. Cl.² B22D *19/12*
U.S. Cl. 164—9 **9 Claims**

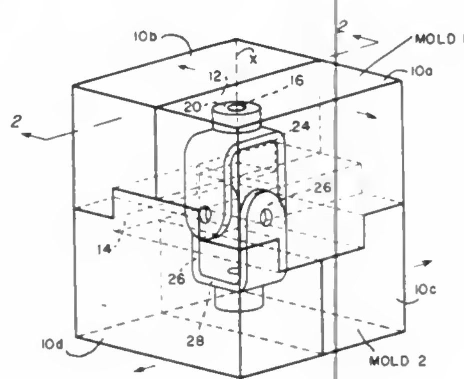

1. A method of casting, in a single casting operation, an assembly of components which is articulatable in a plurality of axes, comprising the steps of:

forming a first mold with cavities shaped to cast a partial cross-section and partial length of a first component of the assembly, and shaped to cast a first whole portion of a second component of the assembly;
forming a second mold which is a mirror image of said first mold, the second mold having cavities shaped to cast a complementary cross-section and a same partial length of the first component, and in which to cast a second whole portion of said second component;
forming third and fourth molds with cavities shaped to cast the remaining length of said first component, to complete said first component, and shaped to cast complementary cross-sections of said second component which will complement said first and second whole portions and complete said second component;
forming an element with a plurality of transversely disposed pins or shafts; supporting said element against movement; closing said molds onto each other and in envelopment of said element; and introducing casting material into said cavities.

4,062,396
METHOD OF MAKING A UNITARY PATTERN ASSEMBLY
Edward George Day, Rocky Hill, Conn., assignor to United Technologies Corporation, Hartford, Conn.
Filed Jan. 5, 1976, Ser. No. 646,804
Int. Cl.² B22C *7/00*
U.S. Cl. 164—15 **32 Claims**

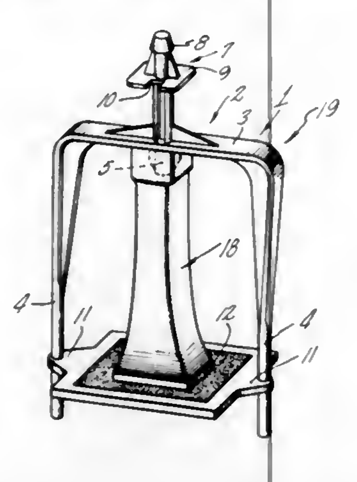

1. A method of making a unitary pattern assembly useful in forming investment shell molds for the conventional and directional solidification of molten metals and alloys comprising the steps of:

a. providing a fixture, said fixture having first and second pattern capturing means rigidly spaced in open opposed relationship a predetermined distance from one another, the fixture being removable after investment molding and before casting and solidification;
b. providing a mold structure having a cavity therein;
c. positioning the mold structure and the fixture to expose said capturing means to the cavity;
d. forming a pattern in the cavity, said pattern being fixedly captured at each end by said capturing means; and
e. removing the mold structure from the pattern, said pattern remaining fixedly captured by said capturing means in the fixture.

4,062,397
PROTECTION AGAINST OXIDATION OF MOLTEN METAL STREAMS IN CONTINUOUS CASTING
Robert E. Cashdollar, Sr., 890 New Castle Road, Butler, Pa.
Filed Mar. 16, 1976, Ser. No. 667,395
Int. Cl.² B22D *11/10*
U.S. Cl. 164—415 **1 Claim**

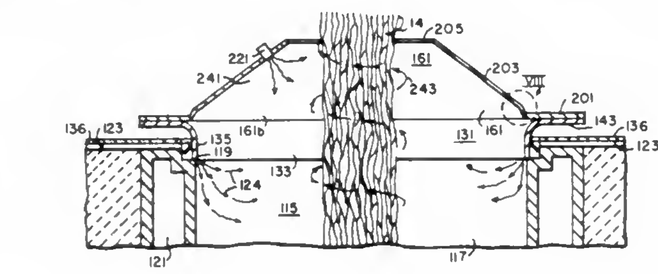

1. For use with continuous-casting apparatus including a mold, means for delivering a stream of molten metal to said mold and means for deriving from said mold a continuous strip, a shroud for enshrouding said stream of molten metal in a protective anti-oxidation gas, the said shroud including a platform from which a projection in the form of a frustrum of a cone extends, said frustrum terminating in a generally circular opening, said shroud to be mounted on said apparatus with said projection generally coaxial with said stream, and means on said frustrum for injecting said gas therein, said shroud being in at least two parts engageable along a joint therebetween and including pivot means connecting said parts about which said parts are pivotal relative to each other and said shroud also including gas-shielding plates extending over the joint between said parts.

4,062,398
AUXILIARY DEVICE FOR USE WITH A PERMANENT MOLD IN CASTING OPERATIONS
Ivo Henych; Erwin Fischer, and Jürg Reist, all of Schaffhausen, Switzerland, assignors to Georg Fischer Aktiengesellschaft, Schaffhausen, Switzerland
Filed June 23, 1976, Ser. No. 698,901
Claims priority, application Switzerland, June 27, 1975, 8371/75
Int. Cl.² B22D *7/12, 35/04*
U.S. Cl. 164—337 **13 Claims**

1. An auxiliary device for use with a permanent mold in a casting operation comprising a metallic cover plate having an upwardly facing surface and an oppositely directed downwardly facing surface with the downwardly facing surface arranged to bear on the top of the permanent mold and to form the upper limit of the mold cavity within the permanent mold, a first opening through said cover plate extending between the upwardly and downwardly facing surfaces and said first opening arranged to open into the mold cavity, a first pipe formed of a refractory material extending downwardly into the first opening in said cover plate, said first pipe having a lower end located substantially in the plane of the downwardly facing surface of said cover plate, and an annular recess encircling and spaced radially outwardly from the opening in the lower end of said first pipe and said recess located in at least one of the adjoining surfaces of the downwardly facing surface of said cover plate and the lower end of said first pipe and open to the

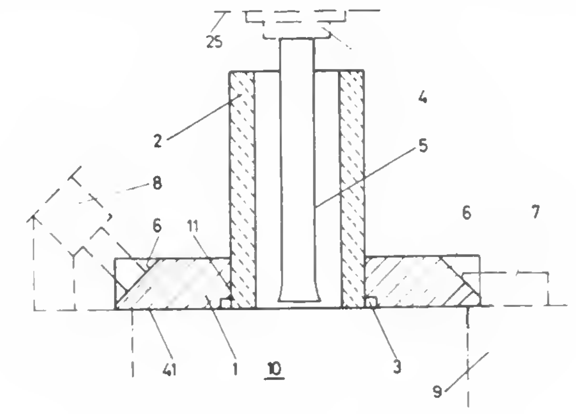

mold cavity, said recess being closed inwardly of the opening therefrom into the mold cavity so that molten metal overflowing into the recess from the mold cavity is retained therein and solidifies forming a seal, said first pipe adapted for feeding molten metal into the liquid core in the casting after the completion of the pouring operation as the molten metal within the mold cavity commences to solidify.

4,062,399
APPARATUS FOR PRODUCING DIRECTIONALLY SOLIDIFIED CASTINGS
Nick G. Lirones, North Muskegon, Mich., assignor to Howmet Turbine Components Corporation, Greenwich, Conn.
Filed Dec. 22, 1975, Ser. No. 643,167
Int. Cl.² B22C *9/02;* **B22D** *27/04*
U.S. Cl. 164—338 M **15 Claims**

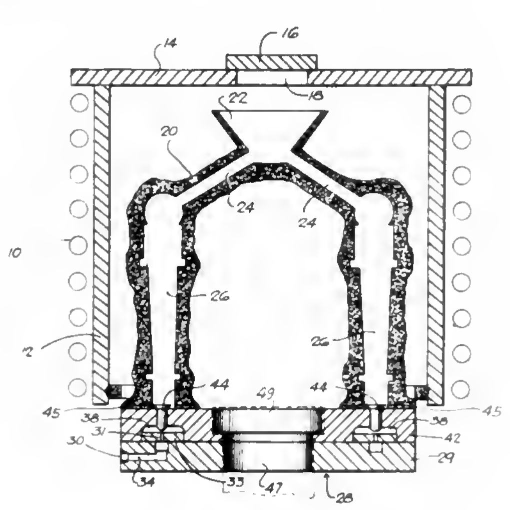

1. In an apparatus for the production of directionally solidified castings including a ceramic mold having an open bottom is supported on a chill plate, and means for pouring molten metal into the mold, the chill plate defining a surface for direct contact with the molten metal whereby the metal initially solidifies adjacent the chill plate with the casting thereafter solidifying progressively away from the chill plate, the portion of the metal contacting the chill plate and initially solidifying tending to shrink and to draw away from said chill plate surface thereby inhibiting heat transfer between the solidified metal and the chill plate, the improvement comprising a heat conductive plug member having an undercut surface area incorporated in said chill plate for communication with said open bottom of said mold, said casting thereby solidifying to said surface area of the plug member whereby the casting is securely held in intimate contact with the plug member and is inhibited against drawing away from said chill plate surface upon shrinkage of the metal, heat transfer between the solidified metal and the chill plate being thereby enhanced and heat thereby being withdrawn through the plug member and the chill plate as the casting solidifies, coolant passages defined by said chill plate for the circulation of a coolant, means for delivering coolant to said passages, a bore defined by said chill plate, said plug member being received in said bore, said bore extending from said chill plate surface to said coolant passages, and said plug member extending into said passages for direct contact of the plug member with the coolant.

4,062,400
AIR HANDLING METHOD AND SYSTEM
Fred Horowitz, Teaneck, N.J., assignor to The Port Authority of N.Y. & N.J., New York, N.Y.
Filed Nov. 28, 1975, Ser. No. 635,842
Int. Cl.² F24F *7/00*
U.S. Cl. 165—2 **12 Claims**

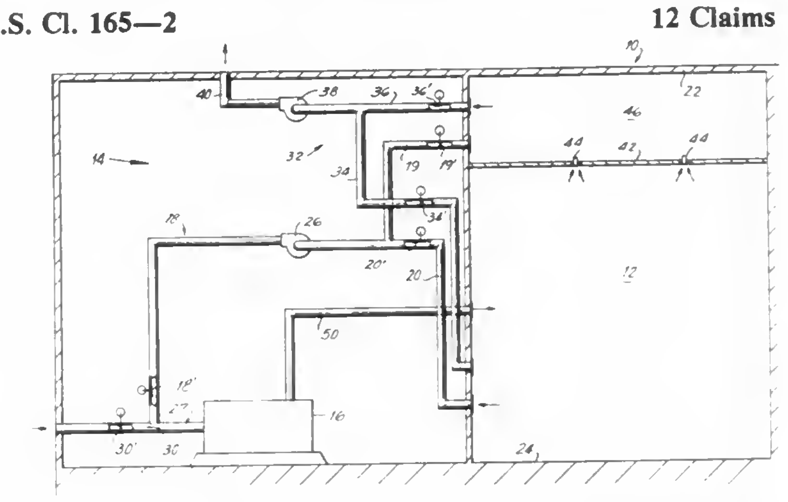

5. An air conditioning method for selectively heating and cooling an enclosed air space such as at least one room in a building, said method comprising the steps of withdrawing air from said room at two positions respectively located adjacent the floor and ceiling of the room while supplying a predetermined amount of outside air to a conditioning unit;

selectively heating said room by discharging the air withdrawn from adjacent the floor of the room to the atmosphere, supplying the air withdrawn from adjacent the ceiling of the room to the conditioning unit with said outside air, heating the air at the conditioning unit and supplying the heated air to said room; and
selectively cooling said room by discharging the air withdrawn from adjacent the ceiling of the room to the atmosphere, supplying the air withdrawn from adjacent the floor of the room to the conditioning unit with said outside air, cooling the air at the conditioning unit and supplying the cooled air to said room.

4,062,401
TOROIDAL MULTIFLUID SEGMENTED HEAT EXCHANGER
Donald F. Rudny, Mundelein, and Dennis H. Lindstedt, Libertyville, both of Ill., assignors to International Harvester Company, Chicago, Ill.
Filed May 3, 1976, Ser. No. 682,824
Int. Cl.² F28F *13/12*
U.S. Cl. 165—125 **4 Claims**

1. A toroidal heat exchanger comprising a plurality of arcuate heat exchanger cores, each for independently effecting the heat content of one of a plurality of vehicle related fluids, each arcuate heat exchanger core being one arcuate segment of said toroidal heat exchanger and each arcuate heat exchanger core having an arcuate inlet header tank and an arcuate outlet header tank connected by a plurality of liquid carrying conduits arranged parallel to the central axis of said toroidal heat

exchanger, each arcuate heat exchanger core curved around said central axis of said toroidal heat exchanger further having

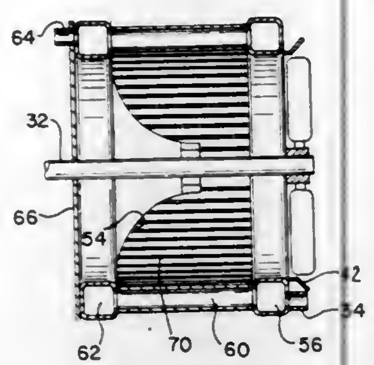

said inlet and outlet header tanks located at the respective top and bottom of said toroidal heat exchanger.

4,062,402

METHOD AND APPARATUS FOR CONNECTING A RISER PIPE TO BLOW OUT PREVENTER STACK AT THE HEAD OF AN OIL WELL

Guy Soulie, Morlaas, and Michel Iato, Pau, both of France, assignors to Enterprise de Recherches et d'Activites Petrolieres (E.R.A.P.), Paris, France

Continuation of Ser. No. 668,313, March 18, 1976, abandoned. This application Nov. 3, 1976, Ser. No. 738,302

Int. Cl.² E21B *7/12*

U.S. Cl. 166—.6 **9 Claims**

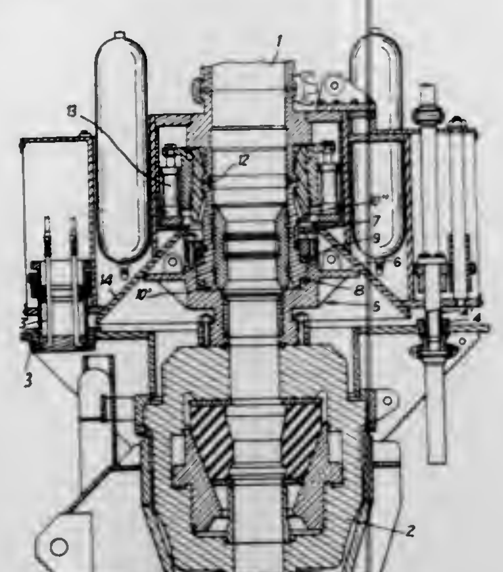

1. Method of connecting a riser pipe with a B.O.P Stack at a well head beneath a greath depth of water, said riser pipe and B.O.P Stack carrying corresponding eccentric tubes, which method comprises the steps of:

successively centering the riser pipe on the B.O.P Stack by resting only at least one downwardly oriented member on the riser pipe on an upwardly oriented member on the B.O.P Stack, bringing the eccentric tubes into a registering position by rotating the riser pipe with respect to the B.O.P Stack, on a low friction bearing on one of the members, and mechanically connecting and latching the riser pipe to the B.O.P Stack to form a fluid-tight seal therebetween while separating said at least one member on the riser pipe from the member on the B.O.P Stack, and finally connecting the eccentric tubes.

4,062,403

PUMP-DOWN SAND WASHING TOOL

Derry D. Sparlin, Ponca City, Okla., assignor to Continental Oil Company, Ponca City, Okla.

Filed July 15, 1976, Ser. No. 705,736

Int. Cl.² E21B *37/00*

U.S. Cl. 166—156 **7 Claims**

1. In a pump-down tool for use in sand washing operations wherein fluids are injected into a well, said tool including a first tubular member having a fluid passageway positioned therethrough and a sand washing tool means having a first locomotive means fixedly positioned thereabout positioned in fluid communication with the lower end of said first tubular member as positioned for use, and also including a second tubing member, said first and second tubing members being in fluid communication at a junction near their lower ends and said first tubing means having a stop means above the junction so that when placed in said first tubing member said sand washing tool is urged along the length of said first tubing member toward said junction to a point wherein said first locomotive means is above the junction by pumping fluids sequentially through said first tubing member, said junction, and said second tubing member; and is urged back along the

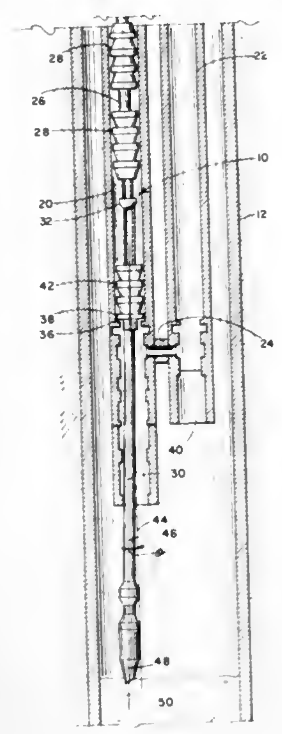

length of said first tubing member toward the upper end of said first tubing member by pumping fluid in the opposite direction; the improvement comprising; a second locomotive means slideably mounted about the lower portion of said sand washing tool within said first tubular member as positioned for use at a locus below said first locomotive means but above said junction and said stop, said second locomotive means including means for positioning said sand washing tool such that its axis on its length projecting below the lower end of said first tubular member is at an angle 0.2 to 5.0° from the axis of said first tubing member and such that the axis of the length of said sand washing tool below said second locomotive means is substantially different from the axis of said first tubular member over the same length.

4,062,404

METHOD FOR IN SITU COMBUSTION

Joseph Pasini, III; Lowell Z. Shuck, and William K. Overbey, Jr., all of Morgantown, W. Va., assignors to The United States of America as represented by the United States Energy Research and Development Administration, Washington, D.C.

Filed Sept. 30, 1976, Ser. No. 728,358

Int. Cl.² E21B *43/24, 43/26*

U.S. Cl. 166—259 **4 Claims**

1. An improved method of in situ combustion of carbonaceous material in a subterranean earth formation for effecting the recovery of hydrocarbons, comprising the steps of penetrating the earth formation with a pair of boreholes projecting into the earth formation along a substantially horizontal plane with respect to the earth surface and along a plane substantially perpendicular to the plane of maximum permeability in the earth formation with said boreholes being parallel to and separated from one another along the plane of maximum permeability, penetrating the earth formation with a plurality of vertically extending boreholes with these vertical boreholes being spaced apart from one another along a plane substantially parallel to and intermediate said pair of boreholes, providing an induced fracture in said earth formation at each of the plurality of vertical boreholes along a plane substantially parallel to the plane of maximum permeability and intersecting with each of said pair of boreholes for establishing a plurality of fluid flow paths projecting between said pair of boreholes and said plurality of boreholes, introducing a combustion-supporting medium into said earth formation through at least one of

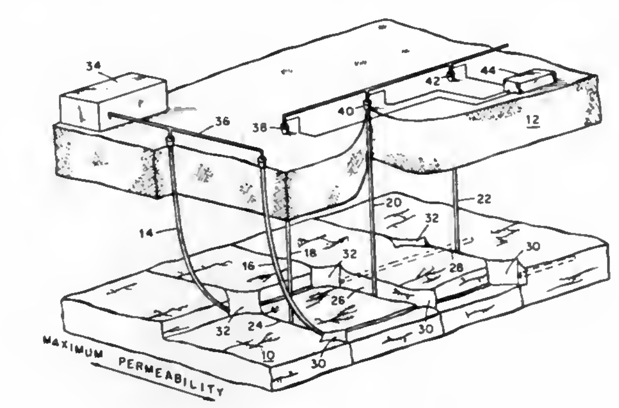

said pair of boreholes, initiating combustion of the carbonaceous material adjacent to at least one of said pair of boreholes to form a combustion zone, withdrawing hydrocarbon-containing fluid resulting from or displaced by said combustion primarily via said fluid flow paths through said plurality of boreholes, and controlling the rate of flow of said fluid through each of said plurality of boreholes for selectively controlling the configuration and rate of propagation of said combustion zone.

4,062,405

METHOD OF TREATING OIL-BEARING FORMATION USING MOLTEN SULFUR INSULATING

John N. Dew; Donald L. Whitfill, both of Ponca City, and Robert E. Crumb, Seminole, all of Okla., assignors to Continental Oil Company, Ponca City, Okla.

Filed Nov. 22, 1976, Ser. No. 743,560

Int. Cl.² E21B *43/24*

U.S. Cl. 166—272 **5 Claims**

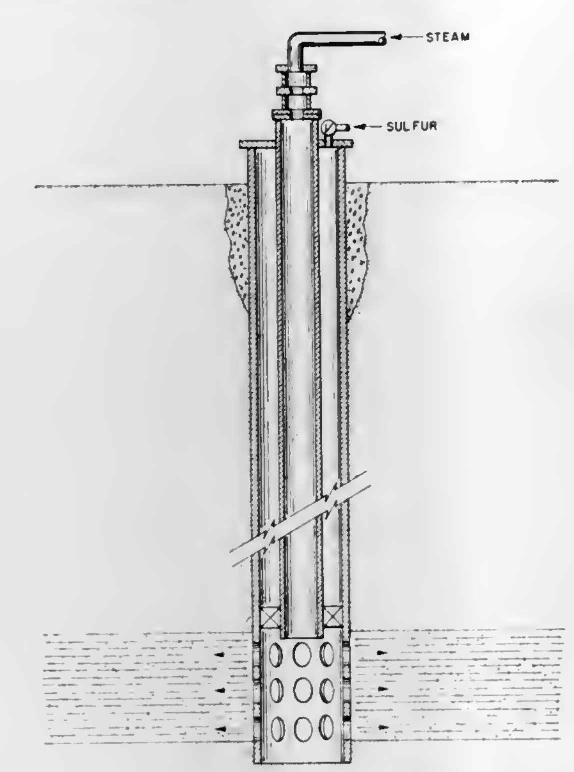

1. In oil bearing formations penetrated by a well bore containing a casing in open fluid communication with said oil formations having an inner tubing string within the casing forming therein an annular space extending substantially to said oil formations, said tubing string being in open communication with the casing at the level of said oil formations, the method of treating said oil bearing formations comprising flowing steam down said tubing string, injecting said steam into said oil formations for a time and at a pressure sufficient to reduce the viscosity of said oil, and reducing the convection heat loss from said tubing string by inserting sulfur into the annular space between said tubing and said casing.

4,062,406

VALVE AND LUBRICATOR APPARATUS

Neil H. Akkerman, New Orleans, La., and Richard J. Ross, Houston, Tex., assignors to Baker International Corporation, Orange, Calif.

Filed Oct. 15, 1976, Ser. No. 732,937

Int. Cl.² E21B *43/12*

U.S. Cl. 166—323 **54 Claims**

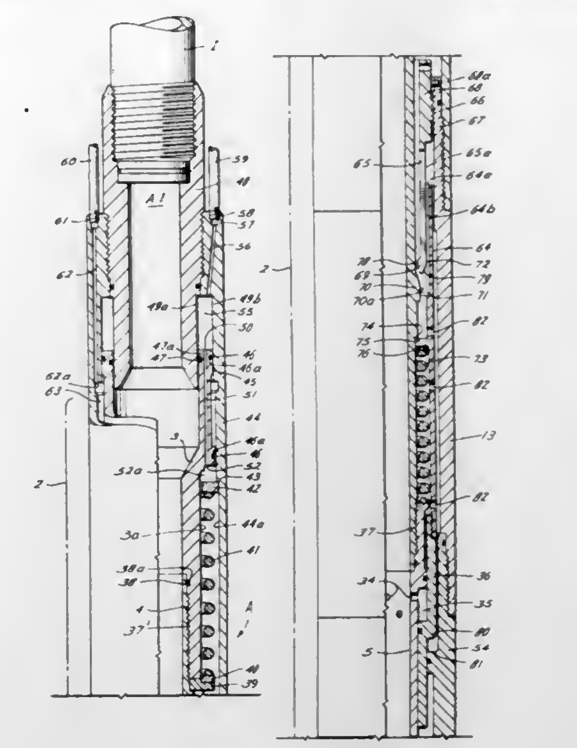

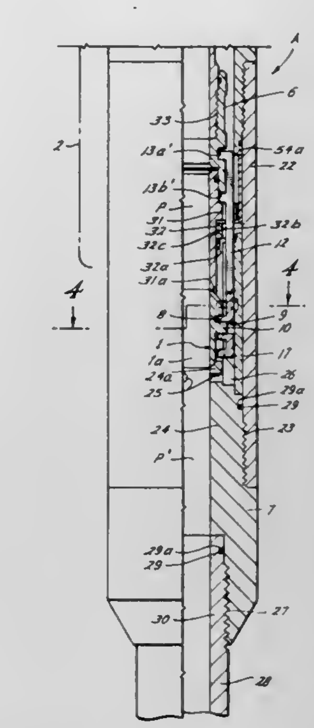

1. An apparatus for installation of drilling, completion, workover tools, or parts thereof for subsequent use in an oil or gas well and for control of fluids through said apparatus, comprising: valve means having a passageway therethrough for control of fluid transmission through said apparatus; first fluid activatable means for first shifting of said valve means to closed position; second fluid activatable means for second shifting of said valve means to open position; and means for mechanically locking said valve means in said closed position to prevent shifting of said valve means to said open position by operation of said first fluid means; said second fluid means being operational to unlock said valve means from said closed

and locked position and to shift said valve means to said open position, said first and second fluid means and said means for locking said valve means being repeatedly and sequentially operational.

4,062,407
FIRE EXTINGUISHER SYSTEM USING LIQUID-BALLAST TIRES
Otto Theodore Bentrup, Terre Haute, Ind., assignor to J. I. Case Company, Racine, Wis.
Filed July 26, 1976, Ser. No. 708,314
Int. Cl.² A62C *1/06, 13/46, 27/30*
U.S. Cl. 169—47 **5 Claims**

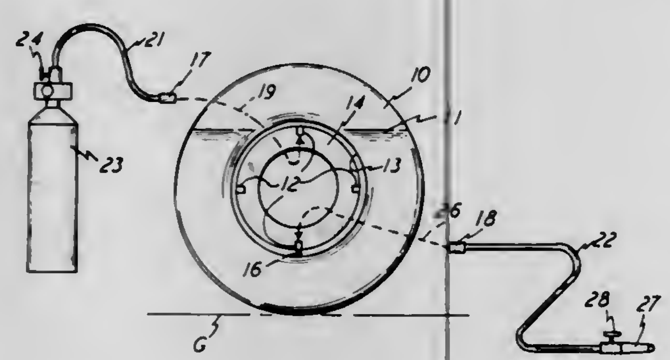

1. A method of providing fire-fighting water in a vehicle having inflatable tires, comprising the steps of arranging a fluid-inflatable vehicle tire with several quick-connect connector valves equally spaced around the tire for introducing and removing fluid relative to the tire, inflating the tire with a fire retarding liquid, connecting a first conduit having a quick-connect connector to one of said valves in the lowest position on the tire when the tire is motionless and it is desired to remove the liquid from the tire to fight a fire, connecting a second conduit having a quick-connect connector and a pressurized supply of a fluid to one of said valves in an upper position on the tire and releasing the pressurized fluid to the interior of the tire and thereby force the liquid out of the tire through said lowest one of said valves and said first conduit.

4,062,408
ROTARY TILLER TINE ASSEMBLY
Edward W. Enters, Fredonia, and Tommy A. Middlesworth, Sheboygan, both of Wis., assignors to Gilson Brothers Company, Plymouth, Wis.
Filed Nov. 3, 1975, Ser. No. 628,186
Int. Cl.² A01B *33/02*
U.S. Cl. 172—123 **18 Claims**

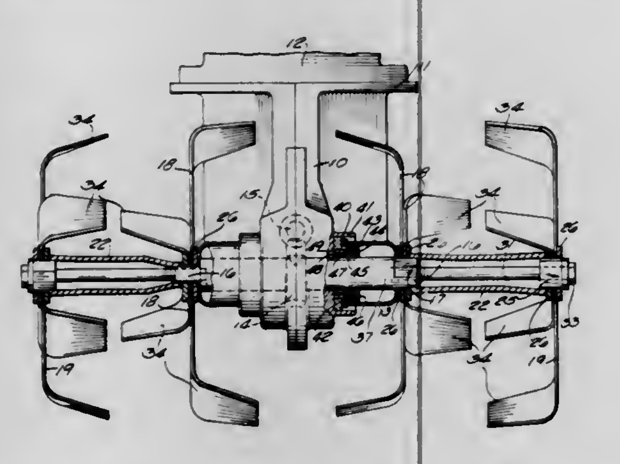

1. A rotary tiller tine assembly comprising a main shaft having an end, means on said end of said main shaft defining a key having diametrically opposite flats, a shaft extension having opposite ends, means defining generally rectangular socket portions at each of the opposite ends of said shaft extension, one socket portion engaged with said diametrically opposite flats of said key on said main shaft end, a plug member including means defining a key having diametrically opposite flats with said flats engaged in the other of said shaft extension ends, and an outboard tine including means defining surfaces therein generally complementary to and interlockingly engaged with said flats of said plug member key.

4,062,409
METHOD FOR THE PRODUCTION OF FISH MEAT POWDER RETAINING FUNCTIONAL PROPERTIES OF FRESH FISH MEAT
Hiroshi Niki; Eiki Deya; Toru Doi; Kenkichi Ahiko, and Hiromichi Hayashi, all of Sapporo, Japan, assignors to Snow Brand Milk Products, Co., Ltd., Sapporo, Japan
Filed July 19, 1976, Ser. No. 706,620
Claims priority, application Japan, July 23, 1975, 50-90655
Int. Cl.² A22C *25/00*
U.S. Cl. 426—643 **2 Claims**

1. In a method for the production of fish meat powder retaining the functional properties of fresh raw fish meat by mincing fresh raw fish meat or frozen SURIMI, adding water to form a slurry and spray drying the resulting fish meat slurry, the improvement comprising incorporating a water-soluble protein into said slurry in an amount sufficient to lower its viscosity, and wherein said water-soluble protein is a member selected from the group consisting of egg white albumin, whey protein, serum albumin, soybean protein and a water-soluble derivative of sodium caseinate.

4,062,410
ADJUSTABLE MOLDBOARD FOR VARIABLE SPEED PLOWING
Richard G. Moe, La Porte, Ind., assignor to Allis-Chalmers Corporation, Milwaukee, Wis.
Filed Jan. 12, 1976, Ser. No. 648,318
Int. Cl.² A01B *15/10, 13/12*
U.S. Cl. 172—708 **9 Claims**

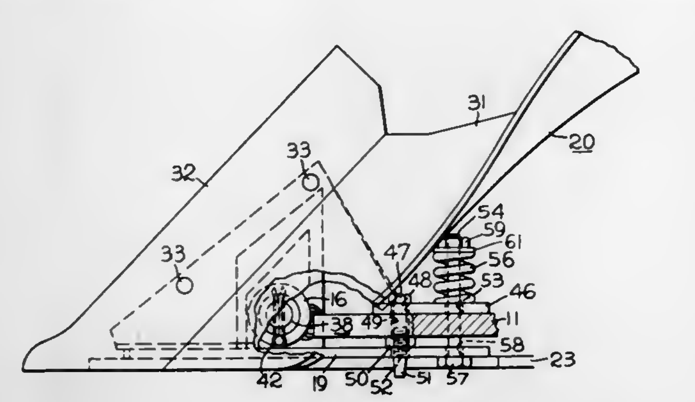

1. A self-adjusting moldboard plow for variable speed plowing comprising:
a frame including a downwardly depending stub beam,
a plow bottom including a frog,
a pivot structure pivotally connecting the bottom front of said stub beam to said frog for horizontal pivotal movement of said plow bottom relative to said stub beam,
cooperating abutments on said plow bottom and stub beam limiting pivotal movement of said plow beam in one direction, said abutments normally being in engagement, and
biasing means operatively interposed between said plow bottom and said stub beam urging said plow bottom in said one direction, said plow bottom automatically pivoting against the action of said biasing means in a direction opposite to said one direction when said plow bottom encounters predetermined soil resistance during plowing.

4,062,411
HYDRAULIC PERCUSSION TOOL WITH IMPACT BLOW AND FREQUENCY CONTROL
Richard Wayne Adkins, and James R. Mayer, both of Denver, Colo., assignors to Gardner-Denver Company, Dallas, Tex.
Filed Dec. 5, 1975, Ser. No. 638,205
Int. Cl.² E21C *3/20;* **B25D** *9/04, 9/20*
U.S. Cl. 173—115 **14 Claims**

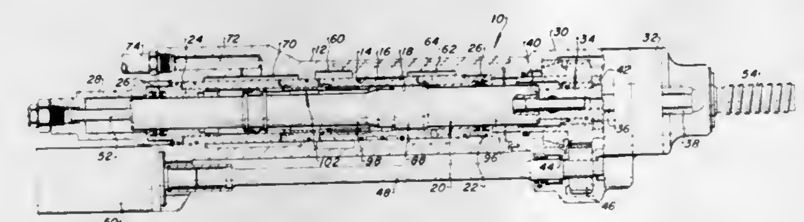

1. A tool for generating percussive forces comprising:
a casing including means defining a bore;
a piston disposed for reciprocating movement in said bore over a forward stroke and a return stroke and including a first portion dividing said bore into first and second cavities;
means for introducing pressure fluid into said first cavity for substantially continuously urging said piston to be displaced in one direction of movement;
inlet and outlet ports in communication with said bore for respectively conducting pressure fluid to and from said second cavity;
a tubular valve member disposed in said second cavity coaxial with said bore and operable to be actuated by said piston to slide along said bore to alternately open and close said inlet and outlet ports for establishing alternating fluid pressures in said cavity to effect reciprocating oscillatory movement of said piston;
surface means on said piston cooperable with said valve member to define a closable chamber for entrapping pressure fluid therein, said piston being operable to actuate said valve member in at least one direction of movement of said valve member through pressure fluid entrapped in said chamber; and,
means for controlling the stroke length of said oscillatory movement of said piston by causing said valve member to open and close said inlet and outlet ports in varying relation to the position of said piston in said bore.

4,062,412
FLEXIBLE SHAFT DRILLING SYSTEM
William A. McIlvanie, Yakima, Wash., assignor to The United States of America as represented by the Secretary of the Interior, Washington, D.C.
Filed Jan. 29, 1976, Ser. No. 653,315
Int. Cl.² E21C *1/10, 11/00*
U.S. Cl. 175—57 **18 Claims**

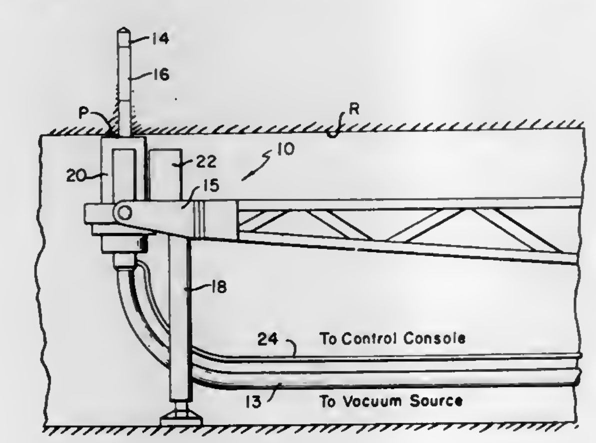

1. An apparatus for drilling long holes in a surface of a rock bed wherein a working distance perpendicular to the surface is limited, comprising:
a flexible drill string having a head, said drill string being formed of a plurality of rigid drill segments in end-to-end engagement to each other; and
means located at said surface directly below a hole to be drilled for straightening a portion of said drill string and guiding said straightened portion perpendicular to said surface, a remaining portion of said drill string extending away from said means along an arcuate path;
said means including means for applying thrust and torque directly to the straightened perpendicular portion of said drill string for drilling into said surface, a resultant thrust applied to the drill head thereby being maximized with minimim wear on the drill string;
said remaining portion of said drill string feeding to said straightening and guiding means along the arcuate path during drilling.

4,062,413
FEEDER UNIT AND METHOD FOR USE IN A WEIGHING SYSTEM
Michael S. Parker, Monroe, La., assignor to Olinkraft, Inc., West Monroe, La.
Filed June 7, 1976, Ser. No. 693,460
Int. Cl.² G01G *13/08*
U.S. Cl. 177—122 **9 Claims**

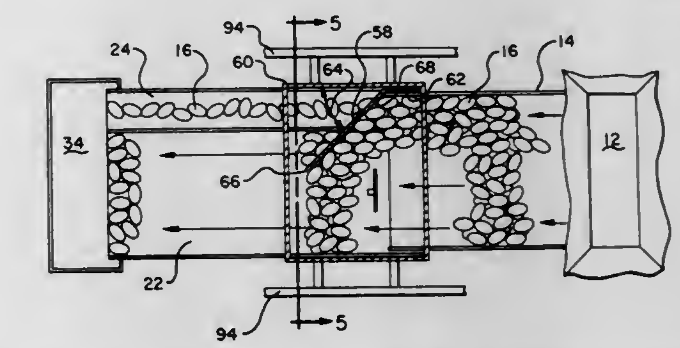

1. An improved feeder unit for use in a weighing system, comprising:
a. a frame;
b. a vibratory bulk feeder fixedly attached to said frame for moving a large plurality of bulk objects along the bulk feeder;
c. a vibratory dribble feeder fixedly attached to said frame for moving a smaller plurality of bulk objects along the dribble feeder, said dribble feeder being positioned in close proximity to said bulk feeder; and
d. an independently movable flexible cantilevered wiper mounted on said frame, and positioned above said dribble feeder for wiping a portion of the bulk objects from said dribble feeder into said bulk feeder, said independently movable wiper allowing a controlled portion of the bulk objects to remain on said dribble feeder, said independently movable wiper being movable an independent predetermined amount in order to prevent jamming between said wiper and said dribble feeder, of the bulk objects that are to be left on said dribble feeder, said wiper also being vibrated independently by the vibratory feeder.

4,062,414
STATIC WEIGHING ON CONVEYOR
Frank M. Cook, San Mateo, Calif., assignor to The Cincinnati Butchers' Supply Company, Cincinnati, Ohio
Filed Nov. 22, 1976, Ser. No. 743,934
Int. Cl.² G01G *19/06*
U.S. Cl. 177—145 **11 Claims**

1. A static weighing-on conveyor comprising:
an elevated trolley rail,
a scale rail interposed between spaced, adjacent ends of the trolley rail,
an endless conveyor chain,
means supporting portions of said chain at lower, upper and

inclined transition levels between said lower and upper levels,

means imparting movement of the chain along and relative to said supporting means,

a plurality of alternately short and long drop fingers pivotally secured to, carried by, spaced along and depending from said chain,

a wheeled trolley supported on and selectively movable over the trolley and scale rails by first a short drop finger and then by the next succeeding long drop finger,

the said lower level of the chain disposing the short drop
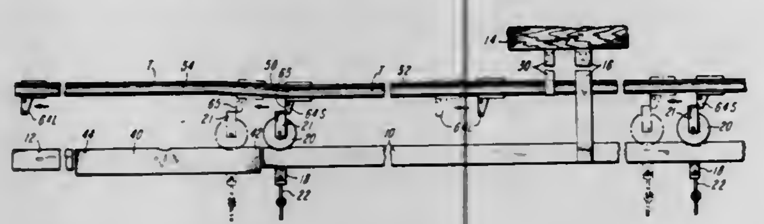
fingers in contacting engagement with an upper portion of a trolley and wherein said fingers are automatically and progressively disengaged from a trolley as the chain passes upwardly along the inclined transition level as the trolley is advanced from one end of the trolley rail onto the scale rail,

the said transition and upper levels of the chain disposing the long drop fingers in contacting engagement with that upper portion of a trolley which was disengaged by a preceding short drop finger for advancing a trolley from the scale rail onto the other end of and thence along the trolley rail.

4,062,415

METHOD FOR WEIGHING A VESSEL SUPPORTED BY SHAFTS JOURNALED IN PRESSURIZED BEARINGS

A. Leslie Miller, Pittsburgh, Pa., assignor to Koppers Company, Inc., Pittsburgh, Pa.

Filed Oct. 20, 1976, Ser. No. 734,027

Int. Cl.[2] G01G *5/04;* **C21C** *5/50*

U.S. Cl. 177—208 **9 Claims**

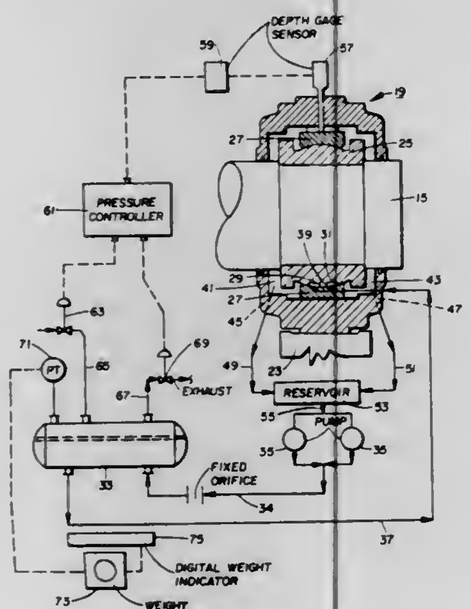

1. A method for measuring the weight of a vessel having shafts journaled in bearings fitted with fluid-actuated pressure pads acting on said shafts, wherein the improvement in said method comprises:

a. pressurizing said pads whereby said shafts raise a distance above said bearings;

b. measuring the resulting vertical distance of said shafts;

c. controlling the pressure on said pads so that said vertical lift distance is constant; and

d. measuring the weight of the vessel as a function of the pressure applied to said source of supply.

4,062,416

ELECTROMAGNETICALLY COMPENSATING BEAMLESS DYNAMOMETER OR WEIGHING MACHINE

Christoph Berg, and Eberhard Stadler, both of Gottingen, Germany, assignors to Sartorius-Werke GmbH, Germany

Filed Apr. 15, 1976, Ser. No. 677,212

Claims priority, application Germany, Apr. 23, 1975, 2518022

Int. Cl.[2] G01G *7/02, 21/24*

U.S. Cl. 177—210 EM **22 Claims**

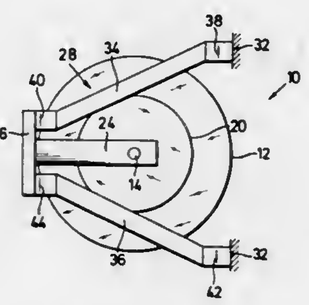

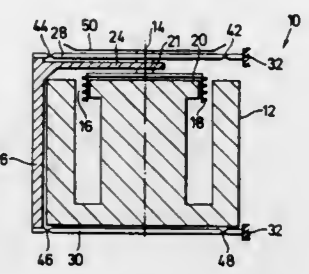

1. In an electromagnetically compensating beamless dynamometer or weighing machine having a work coil movable along its median axis in a working air gap of a stationary magnet arrangement with a principal portion, a parallel construction with two elastic links which are arranged in planes staggered in a direction of movement and are connected to a bracing part maintained stationary and to a rigid connecting element movable with the work coil so as to form a parallelogram the improvement wherein each of said links is defined by two arms of equal length staggered in a respective plane, each of said links being of trapezoid-shaped construction defined by its respective two arms and being attached by mutually farther ends of their respective arms to said bracing part, said median axis of said work coil being arranged within a trapezoid bounded by said arms and parallel connecting sides of said links at right angles to surfaces of said trapezoid and said principal portion of said magnet arrangement being arranged in space bounded by said links.

4,062,417

WEIGHING APPARATUS INCLUDING LINEARIZED ELECTROMAGNETIC COMPENSATION MEANS

Peter Kunz, Tann-Ruti, Switzerland, assignor to Mettler Instrumente AG, Zurich, Switzerland

Filed May 14, 1976, Ser. No. 686,513

Claims priority, application Switzerland, July 22, 1975, 9559/75

Int. Cl.[2] G01G *7/00, 3/14*

U.S. Cl. 177—212 **5 Claims**

1. In a weighing apparatus including a stationary member, a load-responsive movable member displaceable from a no-load position toward a load position relative to said stationary member, means **(20)** associated with said stationary member for generating a magnetic field, a compensation coil connected with said movable member and arranged in said magnetic field, position sensing means **(36)** connected for generating a position signal as a function of the displacement of the movable member from its no-load position, control means **(54)** responsive to said position signal for supplying to said compensation coil compensating current of a magnitude to produce an electromagnetic force for returning the movable member toward its initial no-load position, and load indicating means for indicating the magnitude of the load applied to said movable member as a

function of the compensating current supplied to said compensation coil;

the improvement wherein

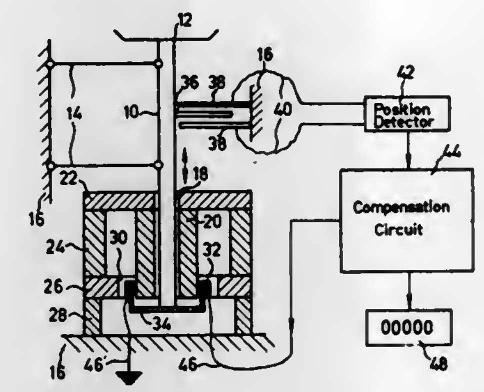

at least one of said control means and said load indicating means includes non-magnetic linearization circuit means isolated from said magnetic field generating means for linearizing the indication of the load indicating means over the weighing range of said weighing apparatus.

4,062,418

APPARATUS FOR SUPPORTING LOADS IN A CART

Rintaro Misawa, Tokyo, Japan, assignor to Sunwa Sharyo Manufacturing Company Limited, Tokyo, Japan

Filed Jan. 26, 1976, Ser. No. 652,407

Claims priority, application Japan, Feb. 6, 1975, 50-17131[U]

Int. Cl.[2] B62B *5/02*

U.S. Cl. 180—8 A **3 Claims**

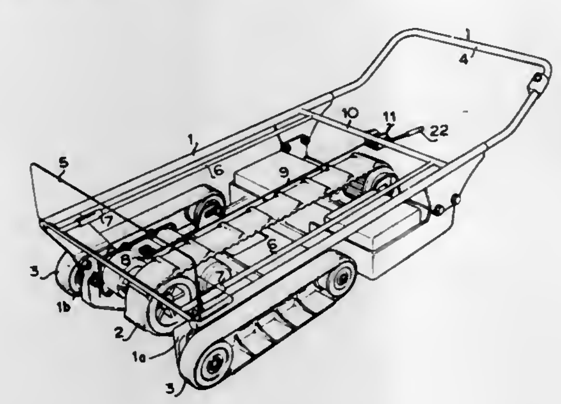

1. Apparatus for supporting loads in a cart which can ascend a stairway comprising

a frame defining a longitudinal axis,

belt crawler means provided in said frame for driving and ascending said cart up a stairway,

a load receiving device longitudinally slidably mounted on said frame and adapted to receive a load,

means for moving said load receiving device in the longitudinal direction of the cart relative to said frame,

said load receiving device extensible from a frontward position on the frame, and shiftable rearwardly toward the center of the frame so that the load is balanced relative to said frame during a stairway ascending operation,

said belt crawler means including a driving belt crawler disposed longitudinally of said frame and having a driving wheel, a driven wheel and an endless belt operatively engaged with said driving and driven wheels, and having a crawling surface of said endless belt positioned at a lowermost portion of said frame.

4,062,419

FUEL-SAVING TRAVELING SYSTEM FOR AN INTERNAL COMBUSTION ENGINE-DRIVEN VEHICLE

Masahiro Kadota, Susono, Japan, assignor to Toyota Jidosha Kogyo Kabushiki Kaisha, Toyota, Japan

Filed Jan. 28, 1976, Ser. No. 653,027

Claims priority, application Japan, Feb. 7, 1975, 50-15274; Dec. 11, 1975, 50-147627

Int. Cl.[2] B60K *17/26*

U.S. Cl. 180—70 R **14 Claims**

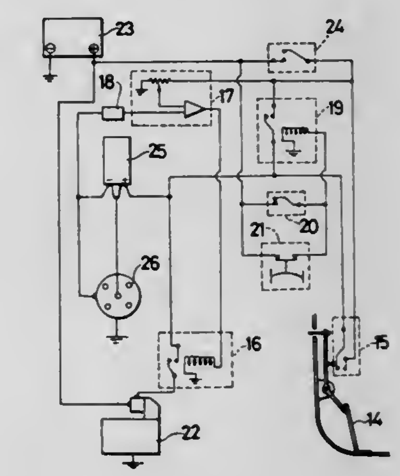

1. A fuel-saving traveling system for an internal combustion engine-driven wheeled vehicle having an accelerator pedal, comprising: an engine; means for transmitting the driving force for rotation of the wheels from said engine to a driven member; one-way clutch means arranged in place on a part of said transmitting means for transmitting the driving force only from the side of said engine to said driven member and allowing free rotation of said driven member when the number of revolutions of said driven member is in excess of the number of revolutions of the driving member; and means, actuated by the accelerator pedal, for automatically starting and stopping said engine in correspondence to the actuation of an accelerator pedal.

4,062,420

CAB, PINNED ON FOR DOUBLE ARTICULATED TRACTOR

Robert N. Stedman, Chillicothe, Ill., assignor to Caterpillar Tractor Co., Peoria, Ill.

Continuation of Ser. No. 636,500, Dec. 1, 1975, abandoned. This application Sept. 22, 1976, Ser. No. 725,641

Int. Cl.[2] B62D *33/06*

U.S. Cl. 180—89.1 **12 Claims**

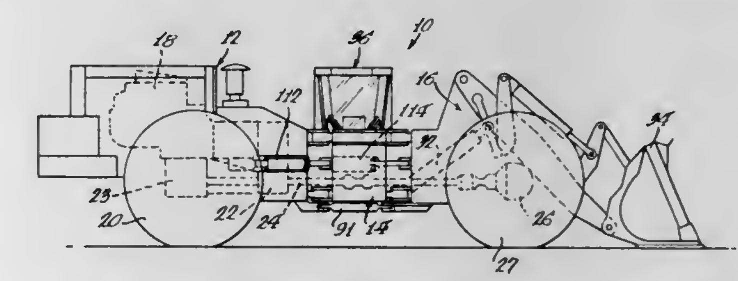

1. In a double articulated vehicle having a carriage with a top, a bottom, a front, a rear and two sides, said carriage having a longitudinal axis running lengthwise from the front to the rear thereof, a front frame pivotally connected to the front of said carriage, a rear frame pivotally connected to the rear of said carriage in line with said front frame, said pivotal connections lying on said longitudinal axis of said carriage, a pair of wheels drivingly connected to said rear frame, a pair of wheels drivingly connected to said front frame, and means for interconnecting said front and rear frames for simultaneous turning, in combination a cab having a front window and side windows, means for removably mounting said cab on one of said sides of said carriage with said front window facing transverse to said longitudinal axis of said carriage, said cab having an upper

extremity defined by the upper extremities of said front window and said side windows which upper extremity lies in a plane that is substantially coterminous with the highest fixed projection on the vehicle.

11. In a double articulated vehicle having a carriage with a pair of opposite sides, a front frame pivotally connected to said carriage, a rear frame pivotally connected to said carriage, a pair of wheels drivingly connected to opposite sides of said rear frame, a pair of wheels drivingly connected to opposite sides of said front frame, means for interconnecting said front and rear frames for simultaneous turning, a cab, means for removably mounting said cab on one of said sides of said carriage with the front of said cab facing in a direction transverse to said carriage, said last-named means comprising interfitting lugs and flanges on said cab and on said carriage, resilient means mounted in each of said lugs, and pins passing through said flanges and through said resilient means in said lugs whereby shock and sound from the vehicle will not be transmitted through said resilient means to said cab and wherein the extremities of said cab is within the outline of said front and rear frames and within the turning radius of the wheels on the side of said vehicle upon which the cab is mounted.

4,062,421
BICYCLE DRIVE SYSTEM
Milton N. Weber, 20655 Audette, Dearborn, Mich. 48124
Filed Feb. 25, 1976, Ser. No. 661,384
Int. Cl.² B60K *1/00*
U.S. Cl. 180—65 A **6 Claims**

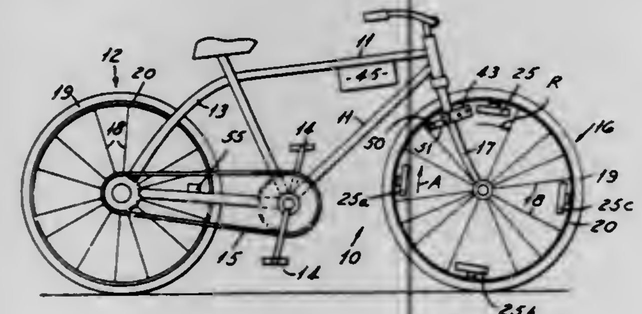

1. In a power drive system for a vehicle, the vehicle including conventional frame, front wheels and rear wheels, the power drive system comprising:
a reversible polarity electromagnetic field positioned in proximity to one wheel of the vehicle;
at least one permanent magnet mounted on said one wheel for rotation therewith, said permanent magnet positioned to move through the electromagnetic field when said one wheel is rotated; and
reversing switch means responsive to the position of the permanent magnet relative to the electromagnetic field to alternate the polarity of the electromagnetic field when the permanent magnet moves into the center of the electromagnetic field;
so that upon rotating said one wheel, the permanent magnet actuates the reversing switch means to repeatedly alternate the polarity of the electromagnetic field to alternately attract the permanent magnet into the center of the electromagnetic field and thereafter repel the permanent magnet outwardly from the electromagnetic field to assist in the rotation of the wheel, said vehicle including pedals to rotate said wheels, and further including a proximity switch actuated by each rotation of the pedals for turning off the electromagnetic field, except when the proximity switch is repeatedly actuated by continuing rotation of the pedals, to turn off the power drive system.

4,062,422
ANTIFOULING DAMPING SYSTEM FOR SONAR DOMES
Howard N. Phelps, Jr., Coventry, R.I., and Dennis O. Power, Ledyard, Conn., assignors to The United States of America as represented by the Secretary of the Navy, Washington, D.C.
Filed June 21, 1976, Ser. No. 698,442
Int. Cl.² A47B *81/06*
U.S. Cl. 181—198 **2 Claims**

1. An antifouling damping system comprising:
a metallic sonar dome;
a calcium carbonate and carbon loaded nitrile rubber material affixed to and enclosing the exterior surface of said sonar dome; and
a neoprene rubber sheet including tribulyltin oxide as an antifouling agent affixed to and enclosing said loaded nitrile rubber material.

4,062,423
SAWHORSE WITH GUIDE FOR CIRCULAR SAW
Joseph M. Armbruster, 2501 N.E. 46th St., Lighthouse Point, Fla. 33064
Filed Feb. 15, 1977, Ser. No. 768,703
Int. Cl.² F16M *11/00*
U.S. Cl. 182—129 **10 Claims**

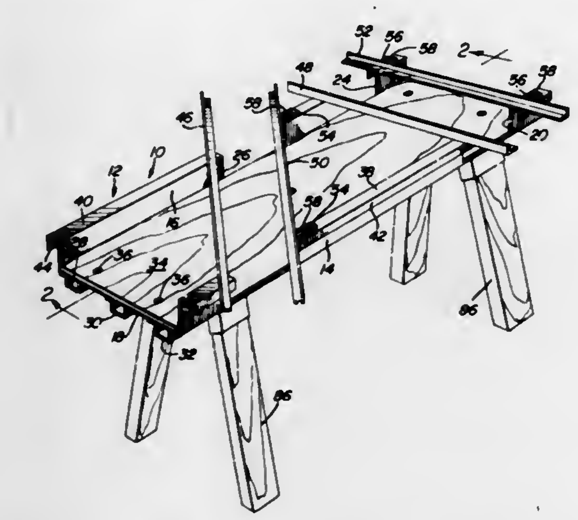

1. A horizontal elongated and upwardly opening channel structure including upstanding longitudinal sides interconnected by means of a bottom extending between and connected to the lower marginal portions of said sides, said sides including at least one pair of corresponding upwardly opening notches formed therein aligned along a path extending transversely of said channel structure, a pair of generally parallel guide structures supported from and extending between corresponding upper marginal portions of said sides on opposite sides of said path with the opposite ends of said guide structures projecting outwardly of the remote sides of said sides, said guide structures being adapted to guidingly support opposite side marginal portions of the support plate of a power saw therefrom for guided movement of said plate along said guide structures with the cutting blade of said saw disposed in said path.

4,062,424
OILER ASSEMBLY
Frank J. Lyden, Manitowoc, Wis., assignor to Oil-Rite Corporation, Manitowoc, Wis.
Filed July 11, 1975, Ser. No. 595,118
Int. Cl.² F16N *27/00*
U.S. Cl. 184—65 **8 Claims**

6. A valve for metering a liquid lubricant, comprising a body provided with an inlet and an outlet, said body further having a bore with one end thereof communicating with the outlet, a porous rod of sintered construction having selected density disposed in said bore between said inlet and said outlet and in spaced relation from the wall thereof, an impervious sleeve

provided on said rod and extending over at least a portion of the length of the rod, and sealing means disposed between the

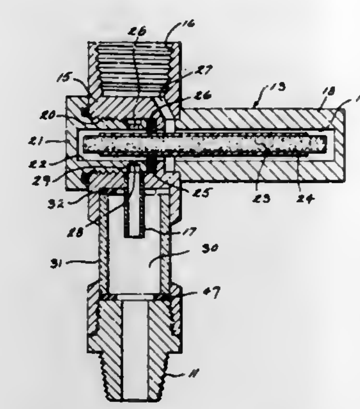

sleeve on said rod and the wall of the bore to preclude the passage of lubricant from the inlet end of the bore to the outlet end of the bore except by passage through said porous rod.

4,062,425
PRESSURE RELIEF VALVE FOR A GREASE GUN
David L. O'Dell, and Leo A. Shaffer, both of Mishawaka, Ind., assignors to Wheelabrator-Frye, Inc., Mishawaka, Ind.
Filed Dec. 13, 1976, Ser. No. 749,689
Int. Cl.² F16N *3/12*
U.S. Cl. 184—105 A **5 Claims**

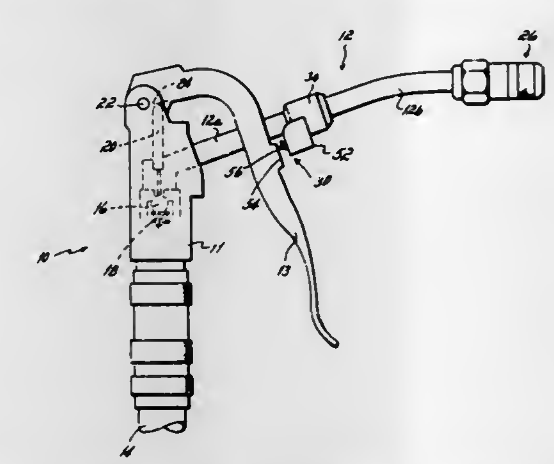

1. A lubricant flow control handle for supplying grease to a grease fitting, said handle comprising,
a handle body adapted to be connected at one end to a high pressure, grease containing hose,
a handle extension connected at one end to the opposite end of said body,
a valve containing coupling secured to the outlet end of said handle extension, said valve containing coupling being operable to prevent grease from being ejected from the handle extension except when said coupling is properly located over a grease fitting,
a flow control valve located interiorly of said body and operable to control the flow of grease through said body and into said extension,
pressure relief valve means operable to relieve high pressure grease entrapped in said extension, between said flow control valve and said valve containing coupling when both said flow control valve and said valve containing coupling are in a closed condition, said pressure relief valve means comprising a bore extending through the wall of said handle extension, a pin valve in said bore seating internally of said handle extension with its stem extending externally thereof, and spring means associated with said stem biasing said relief valve means to a valve closed position, and
a manually operable trigger pivotally mounted upon said body, said trigger being operable on movement in a first direction from a neutral centered position to open said control valve and on movement from said neutral centered position in a direction opposite said first direction to open said pressure relief valve means, said trigger being normally maintained by spring pressure in said neutral centered position in which both said control valve and said pressure relief valve are closed.

4,062,426
BEAM CELL AND MULTIPLE CELL TYPE STRUCTURAL ELEMENTS WITH VARYING SPRING CONSTANTS
Ross A. Close, 3831 Glenbrook Road, Fairfax, Va. 22030
Filed May 28, 1976, Ser. No. 691,139
Int. Cl.² F16F *7/00*
U.S. Cl. 188—1 B **4 Claims**

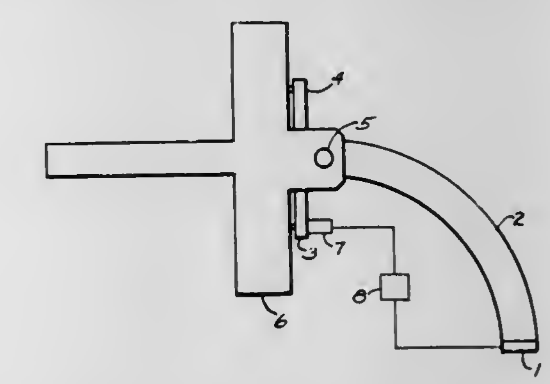

1. A structural element with varying spring constant consisting of a three dimensional cantilever beam with open cross section and a tee shaped metal box beam connected to a varying spring constant three dimensional cantilever beam at the junction of the tee box beam by a pin through top and bottom plates attached to the junction of the tee box beam and through both top and bottom flange plates extending away from the tee box beam along segments of polygons containing the width of the flanges to a free end carrying a load at right angles to the flanges, said flange plates being connected together by a web plate at right angles to the flanges, said flange plates extendtoward the tee box beam sufficient distance to surround a cylindrical stiffener and low friction bearings where the flanges change to rectangular lever arms extending from the pin toward the center for the top flange and from the pin away from the center for the bottom flange, having the bottom flange lever arm free end contacting the tee box beam through a screw jack and having the top flange lever free end contacting the tee box beam through a hydraulic jack.

4,062,427
WHEEL AND DISK BRAKE ASSEMBLY FOR MOTORCYCLES
Hermann Klaue, Tour d'Ivoire 24 e, 1820 Montreux, Switzerland
Filed Mar. 5, 1976, Ser. No. 664,290
Claims priority, application Germany, Mar. 29, 1975, 2514086; Sept. 5, 1975, 2539544
Int. Cl.² B60T *1/06;* F16D *65/12*
U.S. Cl. 188—18 A **15 Claims**

8. An assembly for braking a vehicle wheel comprising a hub, a braking ring disposed at each side of the wheel, a means for supporting each of the braking rings, a disk brake having a friction lining facing the brake ring on each side of the wheel, means on only one side of the wheel for actuating the brake by bringing a first of the said friction linings and a first of the said brake rings into contact, means responsive to relative movement between the said first friction lining and said first brake ring for bringing the second of said friction linings into contact with the second of said brake rings, and means for supporting

the disk brakes and their actuating means in said facing position, one of said supporting means being mounted for rotation

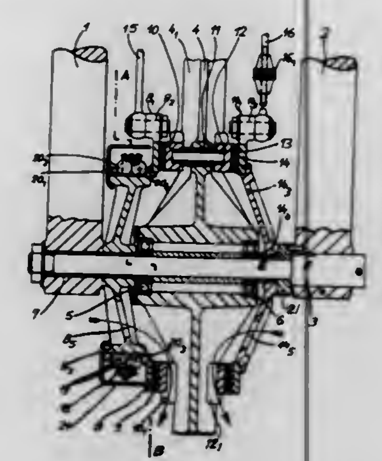

with the wheel and the other being fixed against rotation with the wheel.

4,062,428
STOP DEVICES FOR OVERHEAD CONVEYORS
Gaetano Di Rosa, Pino Torinese (Turin), Italy, assignor to FATA S.p.A., Turin, Italy
Filed Nov. 24, 1976, Ser. No. 744,554
Claims priority, application Italy, Dec. 23, 1975, 70174/75
Int. Cl.² F16F *9/18*
U.S. Cl. 188—275 **1 Claim**

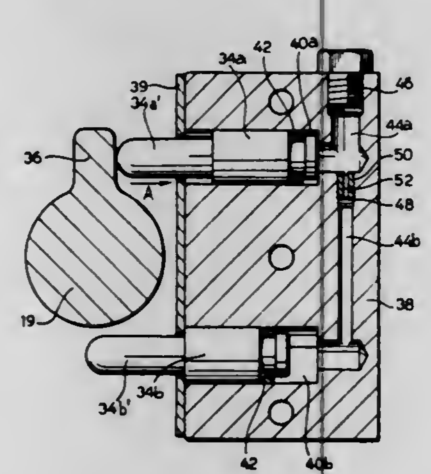

1. A combined shock absorber and limit stop device for a driven shaft which is adapted to be rotated about 180° in opposite directions comprising a driven shaft having a radially extending projection secured thereto for engagement with said combined shock absorber and limit stop device and means for driving said shaft in opposite directions, said combined shock absorber and limit stop device being disposed adjacent said shaft and comprising first and second parallel plungers disposed orthogonally to said shaft with each plunger having an end disposed substantially diametrically opposite the end of the other plunger for engagement by said projection, housing means defining first and second plunger chambers within which said first and second plungers are slidable respectively between first and second end positions, a conduit interconnecting said first and second chambers, a restrictor throttle in said conduit to restrict the flow of a fluid between said chambers and means for limiting the movement of said plungers in opposite directions between said first and second end positions.

4,062,429
COMBINED GARMENT BAG AND CARRIER
Martin A. Tabor; Abby F. Tabor, both of 7322 SW. 146th Terrace, and Clyde A. Laing, 401-5255 NW. 87th Ave., all of Miami, Fla. 33158
Filed Dec. 16, 1975, Ser. No. 641,277
Int. Cl.² A45C *5/14*
U.S. Cl. 190—18 A **17 Claims**

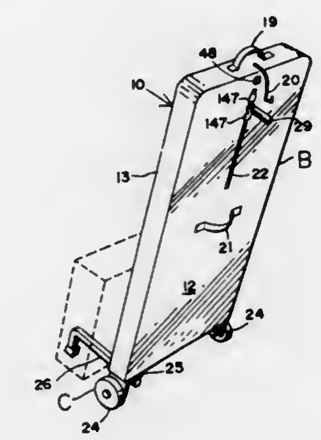

7. In combination:
a flexible and foldable garment container;
means within said container for holding said container in an inflexible and unfolded condition;
said holding means including first means within said container for allowing bending of said holding means whereby said container may be folded; and
said holding means further including second means coupled to said first means and extending through said container for permitting operation of said first means from outside of said container.

4,062,430
QUICK RELEASE CORD STORAGE HOOK
James W. Momberg, Stamford, Conn., assignor to Consolidated Foods Corporation, Old Greenwich, Conn.
Filed Feb. 22, 1977, Ser. No. 770,886
Int. Cl.² H02G *11/00*
U.S. Cl. 191—12 R **6 Claims**

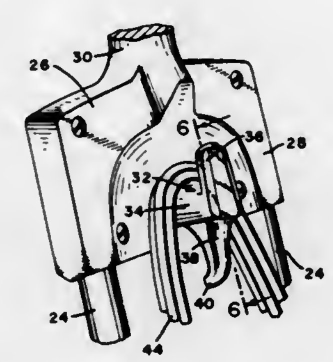

1. In an electrical appliance having an upwardly extending handle for propelling the appliance over a surface, an electric motor located near the lower portion of said appliance, an electric cord for supplying current to said motor, a member movably secured to the upper end of said handle, said member having a first arm of sufficient extent to retain, when said member is in a first position, all of the turns of said electric cord looped therearound, said member being movable to a second position in which said first arm releases all of said turns, and said member having a second shorter arm so positioned as to catch and retain the first turn only of the looped cord when said member is moved to said second position.

4,062,431
POWER TRANSMISSION WITH MODULATING TORQUE CONVERTER INPUT CLUTCH
James J. Jameson, Coffeyville, Kans., assignor to Gardner-Denver Company, Dallas, Tex.
Filed June 24, 1976, Ser. No. 699,406
Int. Cl.² F16D *47/06*
U.S. Cl. 192—3.33 **3 Claims**

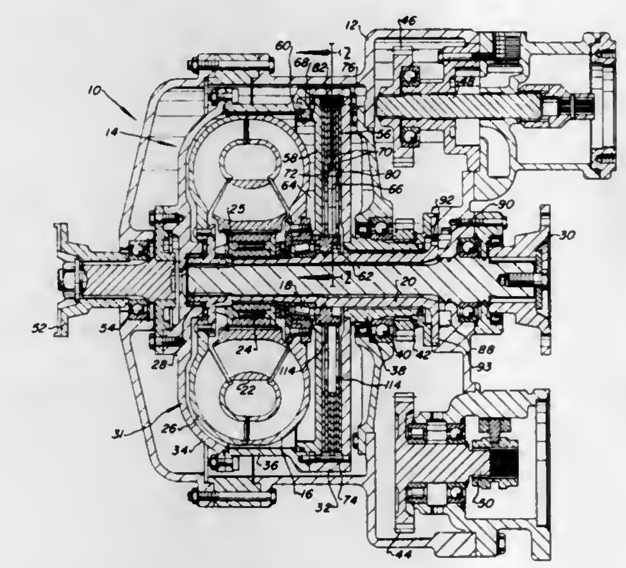

1. A transmission mechanism comprising a rotatable housing connected to a driving member;
a movable piston disposed in said housing and dividing the interior of said housing into first and second fluid chambers;
a hydrokinetic coupling disposed in said first chamber and including rotatable impeller and turbine members;
a clutch disposed in said second chamber and including driving and driven members operable to be selectively engaged to drivingly connect said housing to said impeller in response to movement of said piston;
restricted passage means interconnecting said first and second chambers;
a fluid circuit including means for causing pressure fluid to flow through said first and second chambers by way of said passage means, first conduit means for conducting fluid to said first chamber, second conduit means for conducting fluid from said second chamber, a control valve for throttling the flow of fluid from said second chamber to cause a selectively variable pressure difference between said chambers for actuating said piston to modulate the engagement of said clutch, and further conduit means interconnecting said first conduit means and said control valve, said control valve being operable to conduct fluid to said second conduit means from said first conduit means without flowing through said first and second chambers when the flow of fluid from said second chamber is substantially throttled.

4,062,432
FLUID COUPLINGS
Raymond Dennis Evans, Huddersfield, England, assignor to Holset Engineering Company Limited, Huddersfield, England
Filed July 27, 1976, Ser. No. 709,236
Claims priority, application United Kingdom, July 30, 1975, 31844/75
Int. Cl.² F16D *35/00, 43/25*
U.S. Cl. 192—58 B **7 Claims**

1. A fluid coupling comprising:
a driving member and a driven member mounted for rotation relative to one another;
means forming a drive chamber receiving one of said members and formed by at least a part of the other of said members.
means forming a reservoir separate from said drive chamber,
means forming a passage from said drive chamber to said reservoir,
means forming an outlet port from said reservoir to said drive chamber,
a viscous liquid contained within said reservoir, said liquid being adapted to pass through said port to said drive chamber for transmitting torque between said members and pass through said passage to said reservoir;
a valve arm pivotally mounted on one of said members and having a closure member at one end thereof, said valve arm being displaceable between a closed position in which the closure member seats against said port to prevent flow of liquid into said drive chamber and an open position in which the closure member is spaced from said port in the direction of liquid flow from said reservoir,

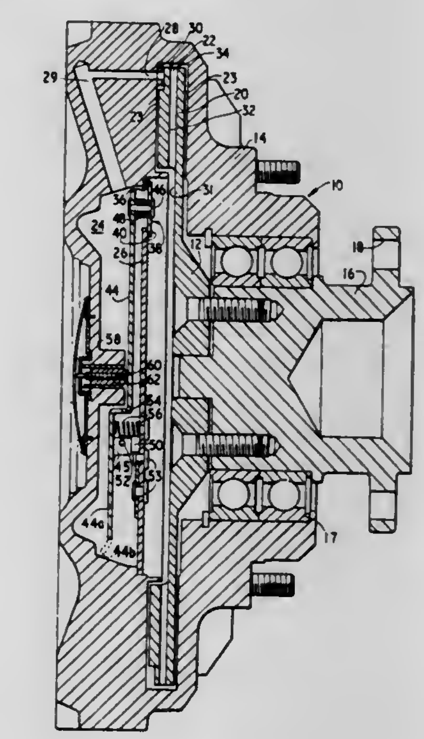

means for yieldably biasing said valve arm toward said closed position;
means for displacing said valve arm toward said open position in response to a single variable parameter external to the coupling;
the geometry of the valve arm and the pivotal mounting thereof being so arranged that centrifugal force generated upon rotation of the coupling acts to apply a turning moment on the valve arm urging it toward the closed position in opposition to the centrifugally created pressure force of liquid acting to urge the valve arm toward the open position;
whereby the operation of said valve is rendered insensitive to the R.P.M. of said coupling.

4,062,433
QUICK RELEASE CENTRIFUGAL CLUTCH CONSTRUCTION
Richard C. St. John, North Canton, Ohio, assignor to Aspro, Inc., Canton, Ohio
Filed Aug. 10, 1976, Ser. No. 713,140
Int. Cl.² F16D *43/14*
U.S. Cl. 192—104 R **15 Claims**

1. A quick release centrifugal clutch construction including
a. power driven rotary shaft means;
b. a driven clutch member;
c. cartridge means mounted on the shaft means and slidable axially along said shaft means for coupling engagement with the driven clutch member for drivingly rotating said driven clutch member;
d. disc spring means mounted on the cartridge means and preloaded to a predetermined displaced biased condition;
e. block means mounted on the shaft means and slidable

axially along said shaft means for operative engagement with the preloaded disc spring means;

f. a pair of link means pivotally connected to their inner ends, with the outer end of one of said link means being pivotally connected in a fixed position with respect to the shaft means, and the outer end of the other of said link means being pivotally connected to the block means, the inner ends of said link means being movable radially inwardly and outwardly between retracted and extended positions, respectively, with the pivotal connection of the link means inner ends being located radially inwardly of an imaginary line extending between the pivotal connections of the outer ends of the link means when in retracted position; and

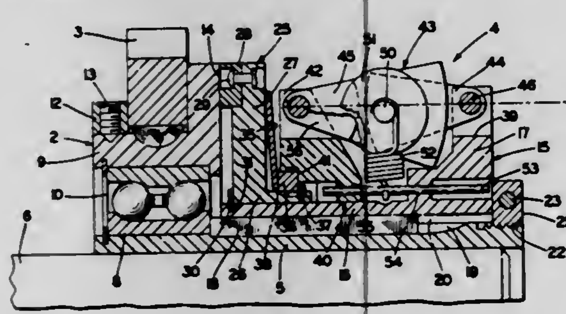

g. coil spring means biasing the link means inner ends radially inwardly toward retracted position and biasing the block means into engagement with the preloaded disc spring means to drivingly connect the cartridge means and driven clutch member when the link means are in retracted position, said link means inner ends moving radially outwardly under the influence of centrifugal force from retracted toward extended position and disengaging generally instantaneously the block means from operative engagement with the cartridge means to disconnect the cartridge means from driving engagement with the driven member upon the pivot connection of the link means inner ends moving radially outwardly of the imaginary line when the shaft means reaches a predetermined rotational speed.

4,062,434
DORMER DOOR SILO
Raymond R. Price; Lawrence A. Olejniczak, and Roger V. Olejniczak, all of Rochester, Minn., assignors to Rochester Silo, Inc., Rochester, Minn.
Filed Sept. 8, 1976, Ser. No. 721,561
Int. Cl.² B65G *65/36;* **E04H** *7/22*
U.S. Cl. 193—34 **4 Claims**

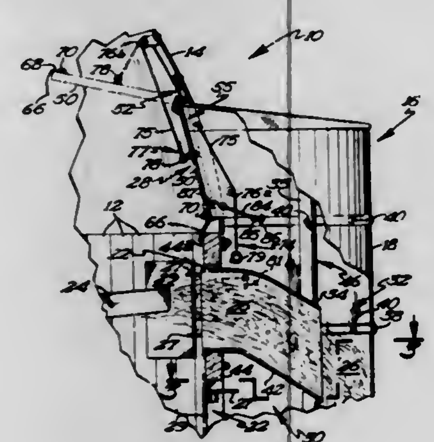

1. An improved silo assembly, said assembly comprising:
a vertically upright silo of tubular configuration;
a plurality of vertically spaced apart discharge orifices provided in said silo through which silage may be discharged;
an elongated, generally U-shaped chute extending vertically upwardly along said silo in overlying relationship with respect to said discharge orifices;
means for defining an access passageway and a separate silage discharge passageway within said chute;
means for selectively permitting passage of discharged silage from said silo to said separate silage discharge passageway; and
dormer door means mounted in the top of said silo and comprising a slab portion overlying a predefined orifice above the uppermost one of said discharge orifices communicating with the top of said chute, compliant hinge means pivotally mounting said door slab means interiorly of said silo and for sealing same, and linkage means attached to said slab and having an actuating portion thereon extending into said access passageway for facilitating selective opening of said door means from a position within said access passageway.

4,062,435
WATER PROOF COIN MECHANISM
Jack S. Chalabian, Gardena, Calif., assignor to K-Jack Engineering Company, Inc., Gardena, Calif.
Filed Mar. 3, 1976, Ser. No. 663,354
Int. Cl.² G07F *1/04*
U.S. Cl. 194—54 **9 Claims**

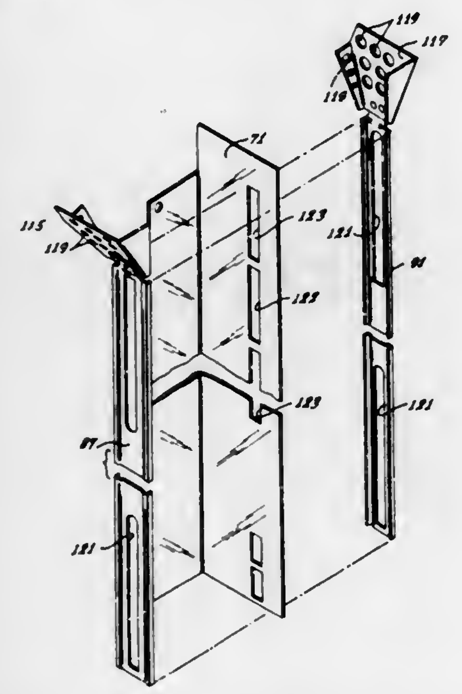

1. In a coin actuated outdoor apparatus having a coin chute therein, the improvement for reducing surface tension between the walls of said chute and a wet coin inserted therein while stripping moisture from the wet coin during its passage through said chute, said improvement comprising:
said chute having opposed generally parallel surfaces;
said surfaces being spaced apart a distance which slightly exceeds the thickness of a coin to be inserted into said chute such that at least one of said generally parallel surfaces contacts at least one surface of the inserted coin,
means formed on said generally parallel surfaces to reduce the surface tension between said surfaces and a coin inserted in said chute,
said means to reduce surface tension including raised portions on at least one of said generally parallel surfaces such that contact between said surfaces and a coin within said chute being thereby reduced by the presence of said raised portions,
whereby the presence of water on said apparatus or on coins inserted in said chute during inclement weather has a reduced tendency to cause sticking of coin within said chute,
said chute being formed by a central wall and adjacent spaced wall members,
a plurality of pawls mounted on the lower end of said chute and cooperating with coins in said chute to effect actuation of said apparatus when proper coinage is deposited in said chute,
funnel means cooperating with said coin chute and receiving coins to be fed into said chute, and

said funnel means including means to permit water contacting said funnel to pass therethrough and to reduce surface tension tending to cause a coin to stick in said funnel when one or both of said coin or said chute are wet.

4,062,436
MATRIX HEAD CALCULATOR PRINTER
Nicholas Kondur, Jr.; Robert H. Wilczewski, and Charles M. Myers, all of Riverton, Wyo., assignors to LRC, Inc., Riverton, Wyo.
Filed Apr. 16, 1976, Ser. No. 677,761
Int. Cl.² B41J *13/03, 19/00*
U.S. Cl. 197—82 **15 Claims**

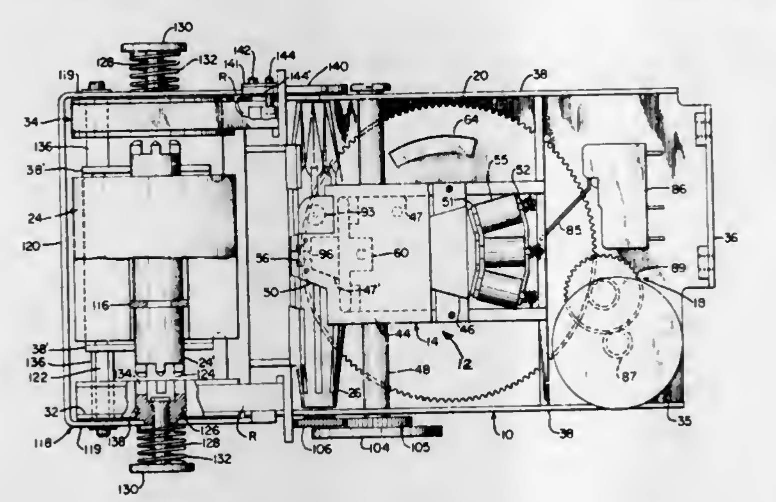

1. A printer unit comprising in combination:
a print head assembly,
motive drive means including a drive member thereon,
a print head carrier including a drive track engageable by said drive member on said motive drive means to impart reversible, translational movement to said print head carrier in response to activation of said motive drive means, and a record medium advancing drive member on said print head carrier, said drive track defined by a generally oval-shaped loop elongated in a direction normal to the translational movement of said print head carrier,
a record medium advance roller engageable with said record medium advancing drive member whereby to advance a record medium in a direction normal to the direction of translational movement of said print head carrier,
record medium feed means adapted to supply continuous lengths of a record medium along a guide path to be engaged by said record medium advance roller, and
a print ribbon and holder means therefor operative to advance the print ribbon along a path extending transversely in front of said recording medium.

4,062,437
CONVEYOR EQUIPMENT FOR SURFACE TREATMENT OF WORKPIECES
Rudolf Knapp, Schockingen, Germany, assignor to Otto Durr, Stuttgart, Germany
Filed Sept. 15, 1975, Ser. No. 613,307
Claims priority, application Germany, Sept. 16, 1974, 2444172
Int. Cl.² B65G *47/24;* **B08B** *3/02*
U.S. Cl. 198—344 **16 Claims**

1. An arrangement for surface treating workpieces, said arrangement comprising:
a rotary conveyor rotatable about a primary rotation axis;
a line conveyor having walking beams extending tangentially past said rotary conveyor;
means including a plurality of holders angularly spaced about said primary rotation axis on said rotary conveyor and each for holding a respective workpiece, each of said holders being rotatable on said rotary conveyor about a respective secondary rotation axis extending generally radially of said primary rotation axis, each holder including gripper means closable and openable for grasping and releasing a workpiece and including
a support,
a U-shaped frame having at least one leg engageable with at least one of said walking beams for displacement of said frame away from the respective support and constituting a gripper part displaceable generally radially of the respective secondary axis toward and away from the respective support, and

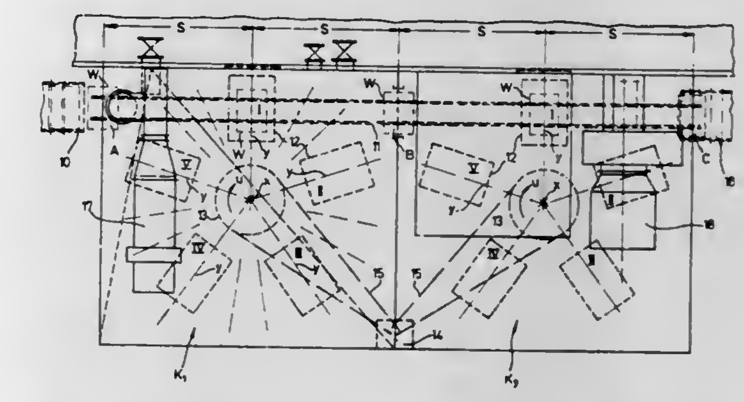

a spring urging the respective gripper part toward the respective support;
means for rotating said rotary conveyor about said primary axis and thereby orbiting said holders and workpieces clamped thereby about said primary rotation axis; and
means for rotating each of said holders about the respective secondary axis during rotation of said rotary conveyor about said primary rotation axis.

4,062,438
STICK SEPARATING APPARATUS
Edward D. Cottrell, Cattaraugus, N.Y., assignor to Champion International Corporation, Stamford, Conn.
Filed Aug. 12, 1976, Ser. No. 713,882
Int. Cl.² B65G *47/26*
U.S. Cl. 198—425 **3 Claims**

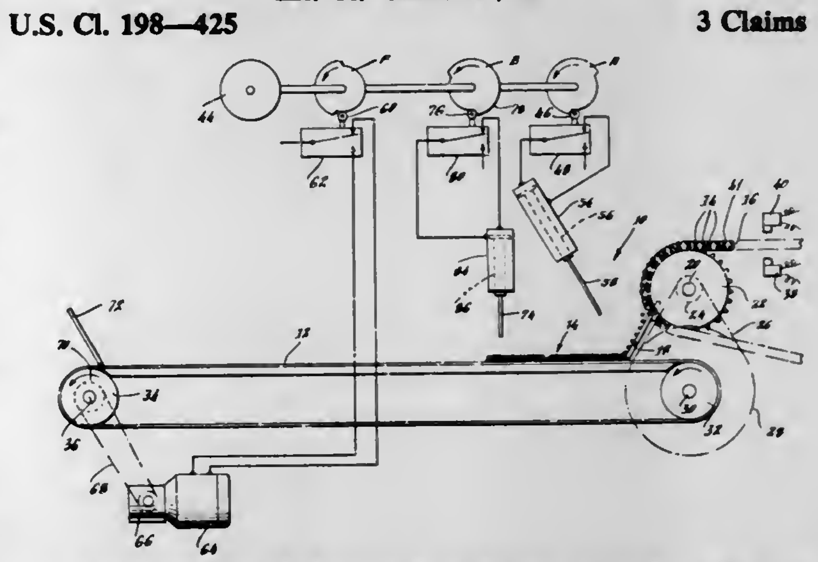

1. Apparatus for separating articles into groups, each containing a predetermined number of the articles comprising:
endless conveyor means having
an input end, and
an output end with an upright end wall,
means for driving said conveyor means,
means for feeding a plurality of articles onto said conveyor means,
means adjacent said feed means for counting a predetermined number of articles to be fed to and disposed on said conveyor means,
gate means between said feed means and the input end of said conveyor means for preventing further articles from being fed from said feed means to said conveyor means in response to a signal from said counting means indicating that a predetermined number of articles have been counted and fed onto said conveyor means,
means connected to said drive means for increasing the

speed of said drive means upon actuation of said gate means to segregate the predetermined number of articles fed onto said conveyor means from articles behind said gate means, and

trap means between said gate means and the output end of said conveyor means operable in response to a delayed signal from said counting means for preventing the segregated articles on said conveyor means between the end wall of said conveyor means and said gate means from rolling back and commingling with articles behind said gate means upon deactivation of said gate means.

4,062,439

APPARATUS FOR TRANSPORTING YARN PACKAGES PRODUCED BY A TEXTILE MACHINE

Takashi Kato, Kariya; Toshio Yoshizawa, Chiryu; Yoshihisa Suzuki, Nagoya, and Shozo Ueda, Kariya, all of Japan, assignors to Kabushiki Kaisha Toyoda Jidoshokki Seisakusho and Daiwa Boseki Kabushiki Kaisha, Osaka, both of, Japan

Division of Ser. No. 435,948, Jan. 23, 1974, Pat. No. 3,946,884. This application Feb. 24, 1976, Ser. No. 660,827

Claims priority, application Japan, Jan. 23, 1973, 44-9662; May 17, 1973, 45-55027; June 26, 1973, 45-72066

Int. Cl.² B65G *47/04*

U.S. Cl. 198—470 6 Claims

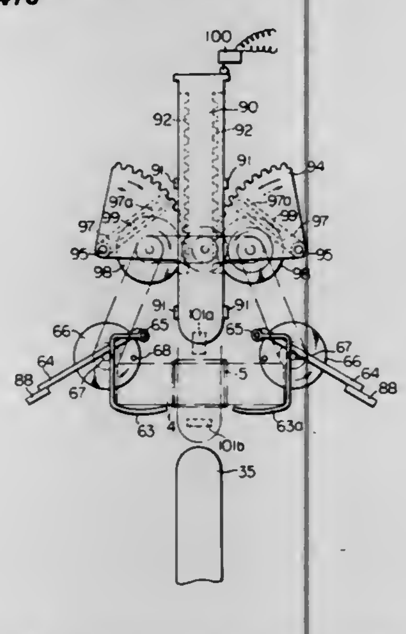

1. Apparatus for transporting yarn packages formed on cylindrical tubes produced by a textile machine to a successive process comprising, in combination, a transporting device provided with a plurality of receiving rods which are capable of being positioned at a receiving position, and a positioning device for correctly positioning said yarn packages for receipt by said receiving rods of said transportation device,

each receiving rod of said transporting device being vertically oriented, said positioning device comprising means for correctly holding said yarn package above said receiving rod of said transporting device and a guide rod displaceably disposed above said holding means, means for displacing said guide rod upward or downward alternately along a vertical path which coincides with an axis of said cylindrical tube of the yarn package held by said holding means and the axis of said receiving rod, means for opening and closing said holding means relative to the motion of said displacing means so that said holding means holds said yarn package until said guide rod is displaced downward and inserted into said cylindrical tube of said yarn package, said holding means is opened when downward motion of said guide rod is completed and said holding means is closed when said yarn package is transferred to said receiving rod and said guide rod is displaced to position above said holding means.

4,062,440

CONVEYOR TRANSFER APPARATUS HOOK RELEASE DEVICE

Patrick J. Barry, Benton Harbor, and Frank R. Skinner, II, St. Joseph, both of Mich., assignors to Whirlpool Corporation, Benton Harbor, Mich.

Filed Oct. 24, 1975, Ser. No. 625,521

Int. Cl.² B65G *47/60*

U.S. Cl. 198—478 8 Claims

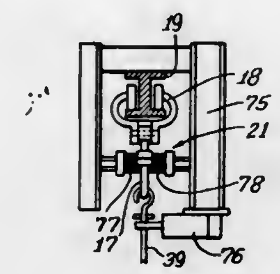

1. In an apparatus for transferring an article from a first conveyor to a second conveyor, said first conveyor including a swingably mounted hook for supporting the article for forward movement with said first conveyor, said article being provided with a hanger for removably engaging the hook, said apparatus further including a pickup device, moving means for moving said pickup device forwardly to engage the hanger and upwardly to lift the hanger from the hook at a pickup position and thusly pick up the article, and for transporting the picked up hanger and article forwardly from the hook at the pickup position to a dropoff position adjacent the second conveyor whereat the second conveyor may receive the article from the pickup device, the improvement comprising: impositive force applying means for swinging the hook rearwardly away from the hanger at the pickup position only in the event the hanger is lifted from the hook by the pickup device sufficiently to disengage the hook from the hanger, said swinging means being constructed to apply a swinging force to the hook insufficient to swing the hook from the pickup device with the article carried thereon.

4,062,441

APPARATUS FOR CONVEYING BOTTLES

Klaus Jendrichowski, Holzwickede, Germany, assignor to Holstein and Kappert Aktiengesellschaft, Dortmund-Wambel, Germany

Filed Nov. 9, 1976, Ser. No. 740,197

Claims priority, application Germany, Nov. 21, 1975, 2552211

Int. Cl.² B65G *47/04*

U.S. Cl. 198—480 4 Claims

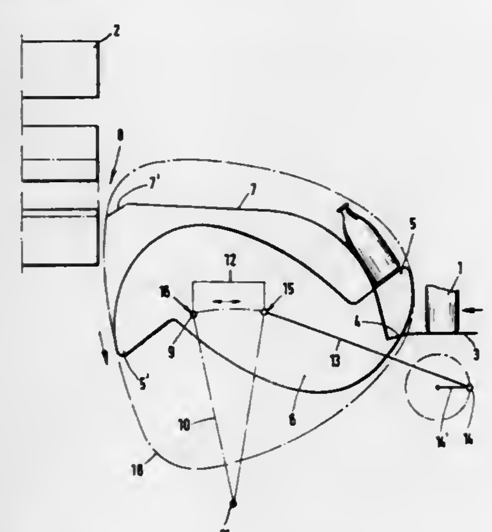

1. Apparatus for conveying bottles and like containers to or for removing the bottles from a cleaning machine, including a stationary supporting surface extending between a first station and a second station, a transfer device for moving bottles over said supporting surface between the first station and the second station, said transfer device comprising an axle, and a plurality of juxtaposed discs rotatably mounted on said axle, each said disc having a pair of drivers space angularly apart around the circumferential periphery of said disc, wherein the improvement comprises means for moving said axle of said discs back and forth along a substantially straight path in the direction between the first station and the second station which direction is transverse to the axial direction of said axle, and said drivers each traversing one-half of a revolution of said disc for each back and forth movement of said axle.

4,062,442

SHUTOFF CONTROL APPARATUS FOR A CONVEYOR

Jürgen Schubert, Bochum, Germany, assignor to Gebr. Eickhoff, Maschinenfabrik und Eisengiesserei m.b.H., Bochum, Germany

Continuation of Ser. No. 630,919, Nov. 11, 1975, abandoned. This application Jan. 7, 1977, Ser. No. 757,623

Claims priority, application Germany, Nov. 11, 1974, 2453294

Int. Cl.² B65G *43/00*

U.S. Cl. 198—502 11 Claims

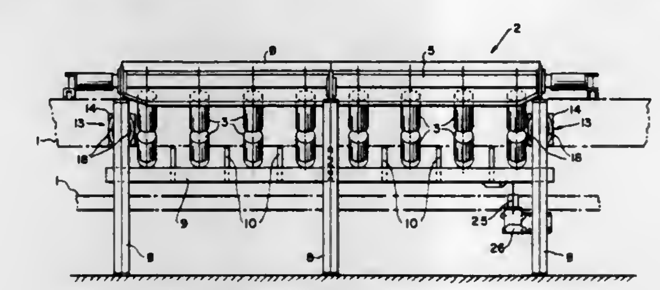

1. A shutoff control apparatus for detecting tears by the penetration of an object through a conveyor belt at the feed run of a conveyor system, said apparatus including the combination of:

an endless conveyor belt forming a feed run and a return run,

a feed station including a stationary frame extending along in the direction of travel by said conveyor belt at the feed run thereof,

a plurality of roller assemblies each having interconnected arbor shafts swingably carried at each of spaced-apart locations by said stationary frame for a trough-shaped support for said endless conveyor belt at the feed run,

frame means extending within the stationary frame of said feed station, said frame means lying in a spaced relation below and independent of said roller assemblies,

means to support said frame means for movement in a longitudinal direction within said stationary frame,

members carried by said frame means while projecting upwardly therefrom at spaced-apart locations to lie in the gap formed between the spaced-apart locations of said plurality of roller assemblies, said members being disposed for engagement by an object penetrating the conveyor belt at the feed run, and

means including a shutoff control switch responsive to movement of said frame means below said rollers relative to said stationary frame for controlling movement by said conveyor belt.

4,062,443

SYSTEM FOR SEPARATING FERROMAGNETIC MATERIALS FROM NON-FERROMAGNETIC MATERIALS

Donald L. Wallace, Elmhurst, and Wallace P. Martina, Bensenville, both of Ill., assignors to Henry Martina, Northbrook, Ill.

Filed June 20, 1975, Ser. No. 588,587

Int. Cl.² B65G *47/00*

U.S. Cl. 198—619 1 Claim

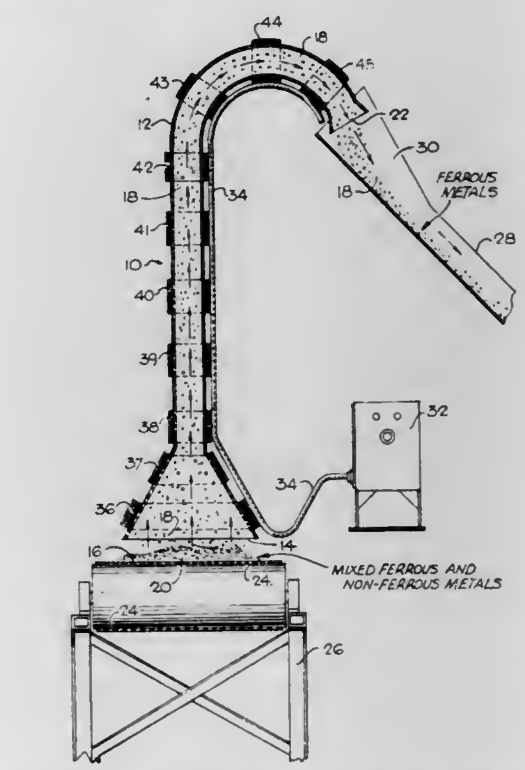

1. A device for transporting non-hollow pieces of ferromagnetic material, comprising, in combination:

a tubular member of magnetic reluctant material having an open inlet at one end and an open outlet at the other end;

a plurality of electromagnetic coils spaced along the length of the tubular member;

solid state control circuit means operatively coupled to the electromagnetic coils for sequentially energizing said coils with direct current to provide an electromagnetic field sequentially about said coils from said inlet to said outlet to electromagnetically move the non-hollow pieces of ferromagnetic material along a path through the tubular member from said inlet through said outlet with sufficient momentum to propel the non-hollow pieces of ferromagnetic material outward of said oulet; said electromagnetic coils including at least one braking coil adjacent the oulet with a polarity opposite the other electromagnetic coils when energized by said circuit means so as to reduce the velocity of the ferromagnetic material exiting said outlet.

4,062,444

APPARATUS FOR CYCLELESS TRANSPORTATION

Vesselin Nachev Nakov, and Emanuil Hristov Nikolov, both of Sofia, Bulgaria, assignors to Institute Po Metaloobrabotvashti Machini, Iliensko Chaussee, Bulgaria

Filed June 30, 1976, Ser. No. 701,011

Int. Cl.² B23Q *7/03*

U.S. Cl. 198—648 2 Claims

1. A conveyor, especially for the asynchronous transportation of workpieces along a transport path connecting a plurality of machines, said conveyor comprising:

a support frame extending along said path and having a pair of walls defining a gap between them;

a respective upwardly open upper channel and a respective laterally open lower channel fixed to each of said walls along the length of said path, each of said channels having a respective bottom;

respective endless roller chains guided in the upper and lower channels on each of said walls, each of said roller chains comprising an array of central rollers and respec-

tive arrays of lateral rollers flanking said central rollers, at least one of said arrays supporting the respective chain along an upper stretch thereof on the bottom of the respective upper channels, another array of said rollers supporting the respective chains on the bottoms of the respective lower channels;

a plurality of carriages spanning said gap and riding on the

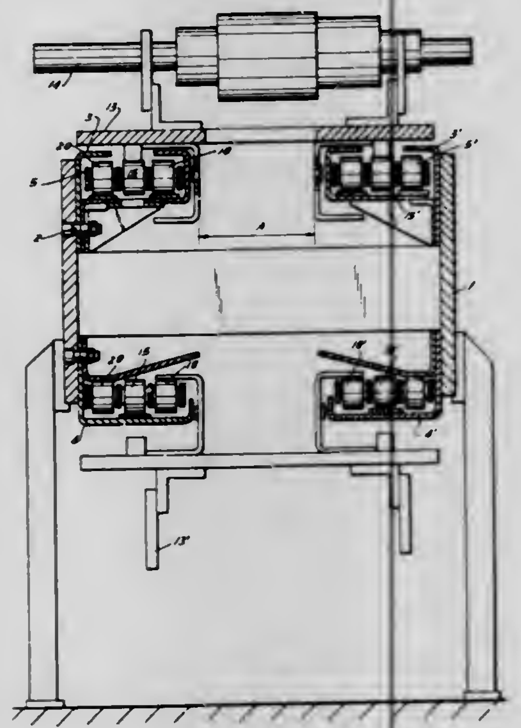

rollers of said other array along upper stretches of said chains while riding upon the rollers of said one of said arrays along a lower stretch of said chains, said carriages being entrained with said chains solely by friction whereby a stop engageable with a carriage on the upper stretch of said chains impedes further advance of the latter carriage while said chains are continuously displaced; and drive means on said support frame for driving said chains.

4,062,445
MEDICINE DISPENSERS
Kjell Möe, Stockbyvagen 3A, Stocksund, Sweden
Filed Sept. 14, 1976, Ser. No. 722,877
Int. Cl.² B65D *43/20, 85/56*
U.S. Cl. 206—1.5 **11 Claims**

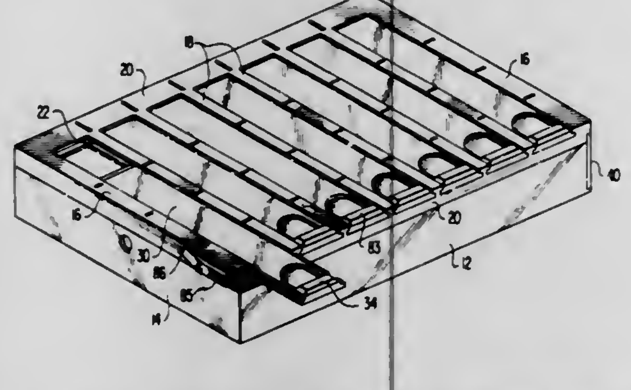

1. In a medicine dispenser including a case having means defining a number of medicine compartments, and at least one cover slidable in the case over the compartments between a closed position closing the compartments and an open position opening the compartments for access through the top of the case; the improvement comprising lock means for locking said cover against movement between said positions thereof, said lock means including at least a stop thereon mounted for movement in the case between a first position in the path of movement of the cover for engaging a selected one of a plurality of abutment surfaces of the cover and blocking the cover against movement and a second position out of the path of the cover for permitting movement of the cover, said lock means further including a manually operable actuating member mounted to the case for movement relative to the case and being connected to the stop for actuating the stop between said positions thereof upon movement of the actuating member relative to the case.

4,062,446
CIGARETTE FILTER PIPE KIT
George Clement Oyama, 9, Shiba, Nishi-Kubo, Shiroyama-cho, Minato, Tokyo, Japan
Filed Feb. 7, 1977, Ser. No. 766,250
Int. Cl.² B65D *69/00, 71/00*
U.S. Cl. 206—223 **10 Claims**

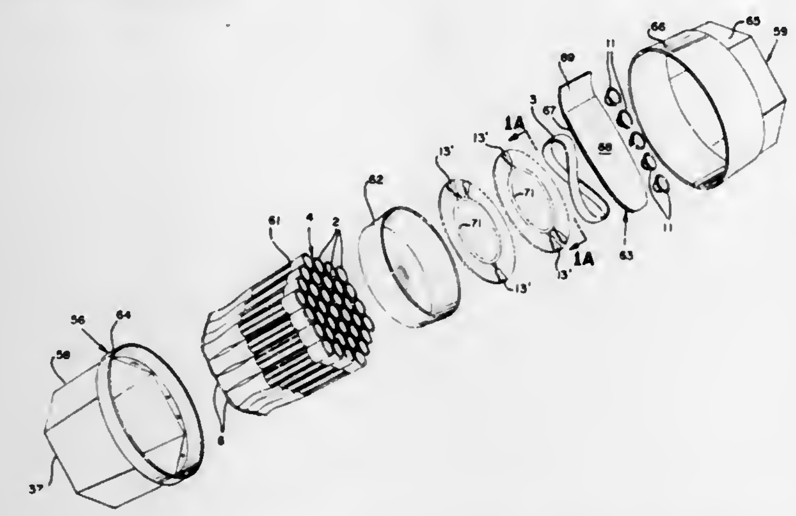

1. A kit for moisture filled cigarette filter pipes comprising:
a. a container having a hexagonal shaped base and a six sided upstanding sidewall having a height less than the length of said pipes;
b. a lid dimensioned for registration with said container and covering the protruding ends of said pipes;
c. a plurality of cigarette filter pipes contained in said container;
d. a plurality of first sealing means for sealing the mouth piece end of said pipes placed in said container; and
e. a plurality of second sealing means for sealing the cigarette holding end of said pipes placed in said container.

4,062,447
REEL PACKAGE
Jeffrey M. Gardner, Wheaton, Ill., assignor to Container Corporation of America, Chicago, Ill.
Filed Sept. 7, 1976, Ser. No. 720,884
Int. Cl.² B65D *85/675*
U.S. Cl. 206—396 **1 Claim**

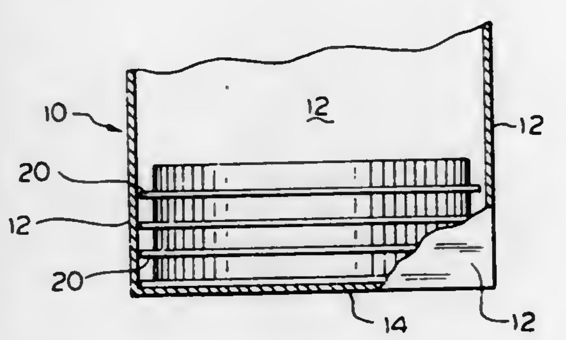

1. A package for holding a plurality of aligned articles having central openings and which are arranged in a stack or row, comprising, in combination:
a. an outer container having side walls and end walls foldably joined to each other to form a boxlike structure having a cross section of greater lateral dimensions than those of the articles to be contained therein;
b. retaining pads positioned adjacent respective articles;
c. each of said retaining pads including a relatively flat base panel having lateral dimensions which are substantially the same as the interior lateral dimensions of said outer container and the exterior lateral dimension of said article and having cut from material within said base panel thereof and foldably joined thereto a pair of retaining member elements;
d. said retaining member elements being spaced from each other while in the unfolded condition and each element including a first section, having a width approximately equal to the thickness of an adjacent article and folded approximately normal to the plane of said panel, and a second section, folded inwardly from and approximately normal to said first section;
e. the second sections of each retaining member being overlapped one over the other with side edges contoured to be received snugly within the central opening of said adjacent article so that when assembled the elements form a retaining member for preventing lateral movement of said article on said pad in said outer container.

4,062,448
SUPPORT MEMBER FOR SHRINK WRAPPED ARTICLES
James Meighan, Newcastle upon Tyne, England, assignor to The Procter & Gamble Company, Cincinnati, Ohio
Filed Feb. 10, 1976, Ser. No. 656,926
Claims priority, application United Kingdom, Feb. 12, 1975, 6049/75
Int. Cl.² B65D *75/04*
U.S. Cl. 206—432 **3 Claims**

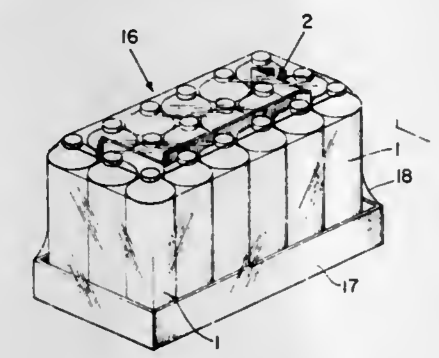

1. In a package comprising a base, a shrink wrapped array of generally identical articles arranged in at least one layer so as to be supported on said base and a support member disposed edgewise on said base to resist compressive forces directed perpendicular to the layer, the improvement in which the support member is of integral, one-piece construction consisting of a generally rectangular single sheet of thin relatively rigid material folded along six generally parallel lines arranged in two symmetrically disposed groups, said lines extending the full height of the support member and substantially perpendicular from the edge on which the support member stands to the opposed distal edge thereof, said lines defining a planar central portion, two inner intermediate load bearing side portions respectively attached to and along the opposite side edges of the central portion by means of infolds, said inner intermediate load bearing side portions projecting to a first side of the plane of the central portion, two outer intermediate load bearing side portions respectively attached to and along the outer side edges of the inner intermediate side portions by outfolds, said outer intermediate load bearing side portions projecting beyond the plane of the central portion to the second side thereof, said load bearing side portions being formed with distal edges that lie in a plane parallel to the base, the support member being located in the interstices of the array such that a longitudinal and two lateral interstitial planes thereof are respectively coincident with the central portion and the outer intermediate load bearing side portions of the support member whereby the load bearing side portions are self adjustably movable while remaining perpendicular the base and the distal edges of the load bearing side portions provide a stable non-tilting support for another such package placed on the distal edges, and whereby the support member is substantially shielded from external side view while no article at the periphery of the layer is completely shielded from external side view.

4,062,449
SKIN PACKAGE WITH TRANSPARENT BACK WINDOW
Elvin B. Popkes, Burnsville, and Gary E. Olson, Brooklyn Center, both of Minn., assignors to Opportunity Workshop, Inc., Minnetonka, Minn.
Filed Oct. 20, 1976, Ser. No. 734,293
Int. Cl.² B65D *73/00;* **B65B** *11/52*
U.S. Cl. 206—471 **10 Claims**

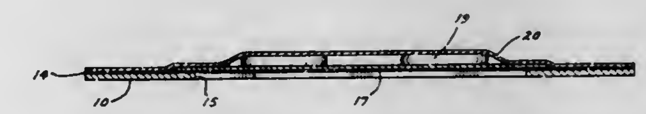

1. A skin package enclosing a product for display and sale, said package comprising:
A. a flat air permeable backing sheet having a front face and a back face,
B. a thin adhesion-promoting transparent coating of thermoplastic resinous material applied continuously over the front face of said sheet,
C. an opening in said sheet,
D. a first transparent precut window covering said opening over the front face of said sheet,
E. a product overlying said window film,
F. a further protective transparent thermoplastic resinous skin film overlying and vacuum drawn around said product and heat sealed to said adhesion-promoting coating and said backing sheet,
G. said transparent window film being substantially air impermeable and the area of said film being greater than that of the opening but substantially less than that of the backing sheet, whereby at least a portion of the front face of the backing sheet around the opening is uncovered by the window film and said skin film conforms generally to the surface of the product without penetration therein.

6. A method of making a skin package enclosing a product for display and sale, said method comprising:
A. providing a flat air permeable backing sheet having a front face and a back face,
B. applying a thin adhesion-promoting transparent coating of thermoplastic resinous material continuously over the front face of the sheet,
C. cutting an opening in the sheet,
D. applying a first transparent precut window film covering said opening over the front face of the sheet,
E. placing a product to be packaged over said window film,
F. applying a further protective transparent heat softened transparent skin film over said backing sheet and product,
G. while still heat softened, applying suction to the back face of said sheet to draw said skin film down over said product and to heat seal said skin film to the adhesion-promoting coating and backing sheet,
H. cooling the package to stabilize the skin film,
I. said transparent window film being substantially air impermeable and the area of said film being greater than that of the opening but substantially less than that of the backing sheet, whereby at least a portion of the front face of the backing sheet around the opening is uncovered by the window film.

4,062,450
DISPLAY DEVICE
Jared E. Carter, Dayton, Ohio, assignor to Dayco Corporation, Dayton, Ohio
Filed May 24, 1976, Ser. No. 689,315
Int. Cl.² B65D *75/00, 85/08*
U.S. Cl. 206—485 **5 Claims**

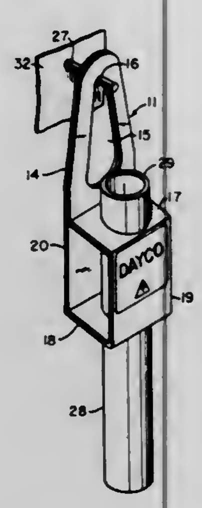

1. In combination, a display device and an elongated tubular object mounted thereon; said device comprising a vertical member adapted to be hung for display, spaced upper and lower horizontal portions hingeably secured to and outwardly extending from said member at approximately right angles thereto and equal in width to the maximum width of said vertical member, and a vertical portion equal in width to and hingeably interconnecting said horizontal portions, each of said horizontal portions having a single centrally located circular opening in alignment with each other; said tubular object being fit within said openings so that its exterior surface is frictionally retained by only the edges thereof, the weight of said tubular member causing said horizontal portions to hinge downwardly away from said right angle position when said device is hung for display, thereby locking said object in place within said opening.

4,062,451
LAMINATED STRUCTURES COMPRISING FILMS OF SILANE CROSSLINKED ACRYLATE INTERPOLYMERS HAVING WATER BARRIER PROPERTIES
Robert J. Gander, Whitehouse, N.J., assignor to Johnson & Johnson, New Brunswick, N.J.
Division of Ser. No. 505,414, Sept. 12, 1974, Pat. No. 3,951,893, which is a continuation-in-part of Ser. No. 90,539, Nov. 18, 1970, abandoned. This application Dec. 29, 1975, Ser. No. 645,062
Int. Cl.² B32B *3/02;* **A61F** *13/16;* **B65D** *81/02*
U.S. Cl. 206—524.2 **16 Claims**

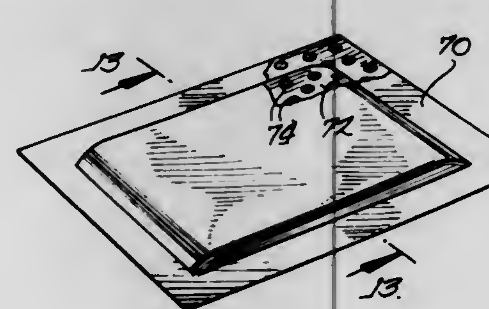

1. A laminated structure comprising a film of a film-forming polymeric composition having water-barrier properties at neutral pH's in the range of between about 4.5 and about 8.5 and solubilizable at a pH substantially outside said neutral pH range, said composition comprising a silane-crosslinked interpolymer of about 0.5 to 5 parts by weight of a first monomer selected from the group consisting of the alkyl acrylates wherein the alkyl group has from one to eight carbon atoms, and about 1 part by weight of a second monomer selected from the group consisting of acrylic acid, methacrylic acid, fumaric acid, maleic acid, maleic anhydride, itaconic acid, dimethylaminoethyl acrylate, dimethylaminoethyl methacrylate, diethylaminoethyl acrylate, diethylaminoethyl methacrylate, tert.-butylaminoethyl acrylate and tert.-butylaminoethyl methacrylate, and about 0.9 to 1.5% by weight, based on the combined weight of said first and second monomers, of a crosslinking monomer selected from the group consisting of the silane monomers having the structural formula:

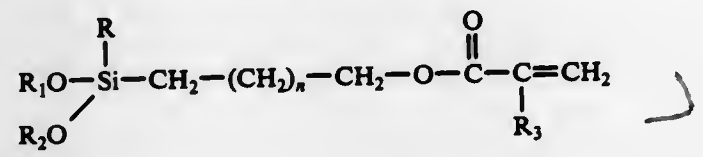

wherein:

R is selected from the group consisting of CH_3—, CH_3CH_2—, CH_3CH_2O—;

R_1 and R_2 are each selected from the group consisting of CH_3— and CH_3CH_2—;

R_3 is selected from the group consisting of H, CH_3— and CH_3CH_2—;

and n is 0 or a positive integer not greater than 8; said film having a thickness in the range of about 1 to 20 mils and being laminated at least on one side of a water dispersible non-woven fiber web having low wet strength.

4,062,452
DOCUMENT FILING APPARATUS
Allan E. Bartholomew, North Canton, Ohio, assignor to Kole Enterprises, Inc., Miami, Fla.
Filed June 30, 1976, Ser. No. 701,132
Int. Cl.² A47F *7/00*
U.S. Cl. 211—55 **11 Claims**

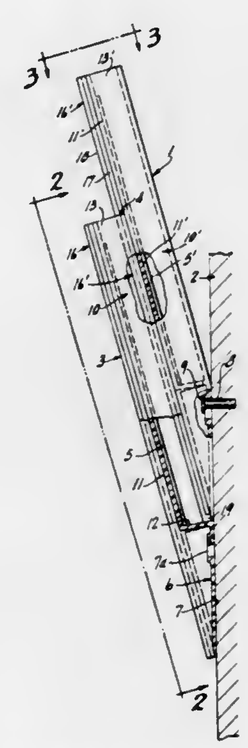

1. A document filing apparatus for filing documents and the like for mounting upon a vertical support means, comprising a first document support receptacle having an opening at the upper portion to receive papers for filing mount means secured to the lower end of said receptacle for supporting said receptacle in a generally vertical position on said vertical support means with the receptacle in a forwardly tilted position to facilitate access to the upper opening, two part receptacle coupling means, said receptacle having a first part on a first portion of said receptacle and a second part on a second portion of said receptacle, said coupling parts being arranged whereby a second receptacle having said first and second parts of the coupling means may be releasably attached to the first receptacle by coupling of the first part of one receptacle to the second part of the other receptacle, said coupling means holding said receptacles in face-to-face relationship to hold the outer receptacle to the first receptacle and thereby supporting said receptacles in vertical offset relation with both of the receptacles in said forwardly tilted position, said mount means of the first of said receptacles being a wedge-shaped member having V-shaped sidewalls and includes a wedge-shaped bottom portion having partial front walls on the opposite sides of the receptacle extending downwardly as an extension of said receptacle and an offset mounting wall along the inner edges of said sidewalls and set inwardly of said front walls to define the angular orientation of the receptacles, whereby a plurality of said receptacles have the mounting walls aligned and abutting the support means.

4,062,453
DEVICE FOR STORAGE OF SKIS
Hans Gorlach, Lerchenfeldstrasse 14, Kaufbeuren-Neugablonz, Germany
Filed Jan. 29, 1976, Ser. No. 653,610
Claims priority, application Germany, Feb. 8, 1975, 2505411
Int. Cl.² A47F *7/00*
U.S. Cl. 211—60 SK **5 Claims**

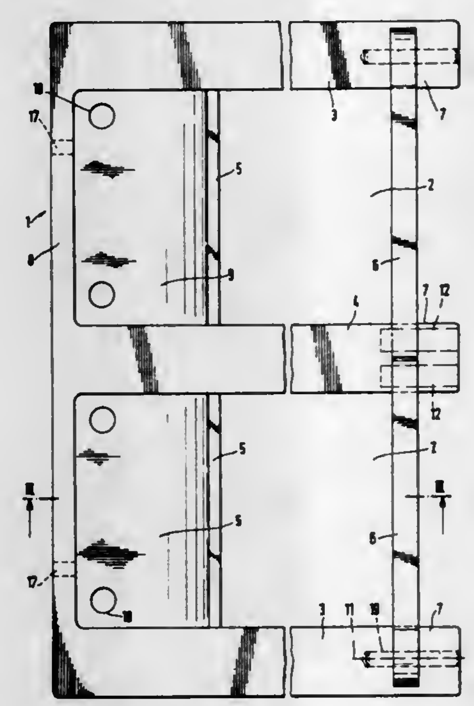

1. A device for storage of skis, comprising a one-piece holder of a synthetic material and which is adapted to be attached to a support to provide at least one compartment for the storage of a pair of skis, said holder comprising at least two downwardly-opening, hollow arms which extend at right angles to the said support and are spaced by an amount corresponding to the width of the skis, an upwardly-opening spacer element which extends integrally between the arms at a distance from said support substantially equal to the height dimension of the skis in use, and a displacable closure element which extends transversely between the free ends of said arms, a back plate integral with and from which said arms extend at right angles, connected to and reinforced by said spacer element, said spacer element comprising an upwardly-open channel form, said closure element comprising a finger element pivotable about a horizontal axis on at least one of said arms and in spaced relation from said spacer element.

4,062,454
MATERIAL LOADING TRAILER APPARATUS
Marvin J. Priefert, Pittsburg Highway, Mount Pleasant, Tex. 75455
Filed Mar. 2, 1977, Ser. No. 773,483
Int. Cl.² B60P *1/04*
U.S. Cl. 214—1 HH **16 Claims**

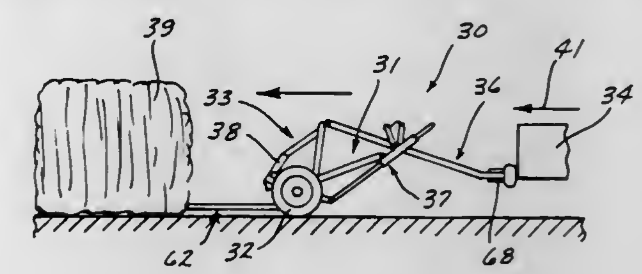

1. A material loading trailer apparatus comprising:

a. a portable frame,

b. a pair of ground wheels,

c. means suporting each ground wheel on the portable frame for rotation about an axis extended transversely of the portable frame,

d. a load carrying frame,

e. a tonque structure having a rear portion pivotally connected to the load carrying frame and a forward portion connectible with a towing vehicle,

f. means for supporting the load carrying frame on the portable frame for movement between a lowered loading position and an elevated transport position including:

1. a first lost motion means connecting the tongue structure to the portable frame for movement of the load carrying frame relative to the portable frame in response to a longitudinal lost motion of the tongue structure relative to the portable frame, and

2. a second lost motion means connecting the load carrying frame to the portable frame for vertical and longitudinal movement of the load carrying frame relative to the portable frame,

g. a lift member on the load carrying frame for each ground wheel,

h. each lift member, in response to a forward lost motion of the tongue structure relative to the portable frame, being moved forwardly and upwardly on an associated ground wheel to elevate the load carrying frame from the lowered loading position to the transport position therefor, and in response to a reverse lost motion of the tongue structure relative to the portable frame to lower the load carrying frame from the transport position to the loading position therefor, and

i. locking means for releasably securing the load carrying frame in said transport position.

4,062,455
REMOTE MANIPULATOR
Carl R. Flatau, 30 Dartmouth Road, Shoreham, N.Y. 11786
Filed Nov. 22, 1976, Ser. No. 743,962
Int. Cl.² B25J *3/00*
U.S. Cl. 214—1 CM **10 Claims**

1. An apparatus for translating the power input of at least two parallel drive shafts into angular or rotational output motions around two respective axes which extend at a right angle to each other, comprising drive means including said parallel drive shafts, frame means supporting said drive means, first motion output means, first bearing means rotatably supporting said first motion output means relative to said frame means, second motion output means, second bearing means rotatably securing said second motion output means to said first motion output means, said first and second motion output means having respective first and second longitudinal axes extending substantially at a right angle relative to each other, differential gear means including first and second bevel gears

rotatably supported relative to said first motion output means and a bevel pinion gear rigidly secured to said second motion output means, first gear train means operatively interposed between one of said parallel drive shafts and said first bevel gear, second gear train means operatively interposed between the other of said parallel drive shafts and said second bevel gear, said bevel pinion gear meshing with said first and second

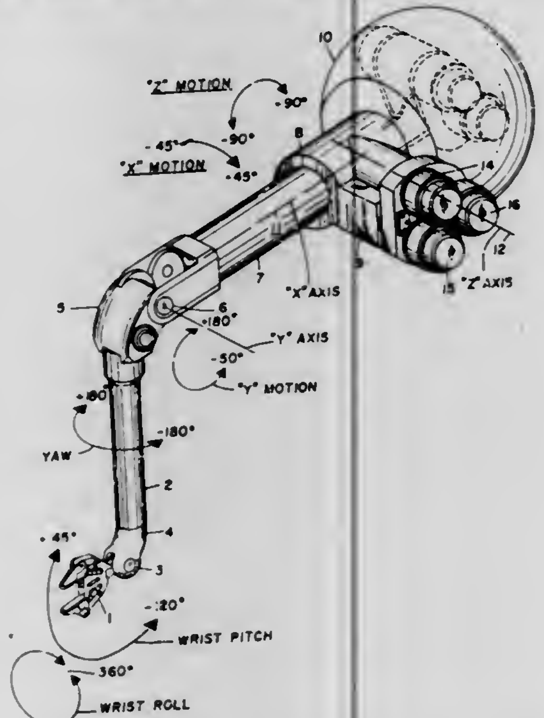

bevel gear whereby rotation of said first and second bevel gears in the same direction rotates said first motion output means about its respective first longitudinal axis while simultaneously rotating the second motion output means also about said first longitudinal axis, and whereby rotation of said first and second bevel gears in opposite directions rotates said second motion output means about its own longitudinal axis.

4,062,456

ADJUSTABLE ROLLERS FOR POSITIONING PIPE

J. C. Birdwell, Houston, Tex., assignor to Midcon Pipeline Equipment Co., Houston, Tex.

Division of Ser. No. 592,170, July 1, 1975, Pat. No. 3,984,007. This application June 10, 1976, Ser. No. 694,886

Int. Cl.² B63B *35/04*

U.S. Cl. 214—1 P **15 Claims**

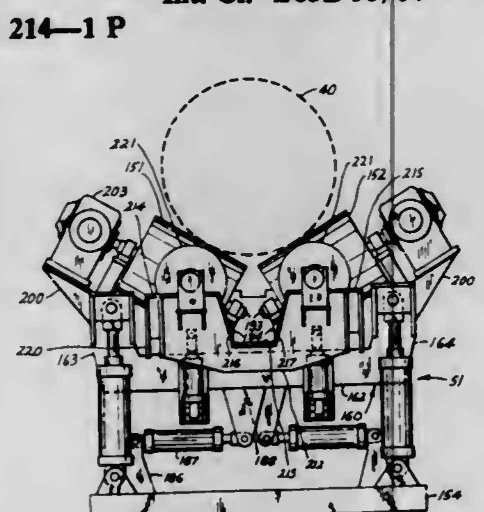

1. Pipe line-up coneyor apparatus, comprising a body having plural conveyor rollers supported thereby for supporting a length of pipe and for conveying the length of pipe longitudinally, plural generally vertically pivotally disposed and vertically extendable and retractable support means for supporting said body at longitudinally and laterally spaced points thereof and for independently raising and lowering said spaced points of said body, and plural drive means for independently moving the ends of said body transversely in either direction, whereby a length of pipe supported on said conveyor means may be selectively moved to any longitudinal position for welding to a pipeline.

4,062,457

LOADING DEVICE

James Duncan McLean, P.O. Box 321, Oxbow, Canada

Filed Aug. 6, 1976, Ser. No. 712,426

Claims priority, application Canada, Aug. 6, 1975, 232957

Int. Cl.² B60P *3/00, 1/16*

U.S. Cl. 214—1 HH **2 Claims**

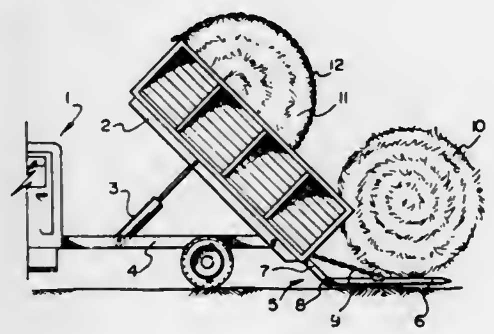

2. In a vehicle having a tiltable platform, a loading device for lifting bales onto said tiltable platform, said device comprising a framework having at least two opposed and parallel longitudinal members and at least two opposed and parallel transverse members which are normal to said longitudinal members, at least one of said transverse members being rigidly connected to said longitudinal members adjacent one of their ends, a plurality of parallel forks pivotally connected to said longitudinal members at their other ends, and adjustable limit means for maintaining the degree of pivot between the framework and the forks at a preselected obtuse angle, said adjustable limit means comprising at least two chains and means for connecting said chains to said framework and said forks at predetermined lengths of the chains.

4,062,458

APPARATUS FOR STORING OBJECTS ON A VEHICLE

Silvio Manini, and Antonio Pacciarini, both of Milan, Italy, assignors to Industrie Pirelli S.p.A., Milan, Italy

Filed May 14, 1975, Ser. No. 577,459

Claims priority, application Italy, June 28, 1974, 24491/74

Int. Cl.² B65G *47/00*

U.S. Cl. 214—16.4 R **13 Claims**

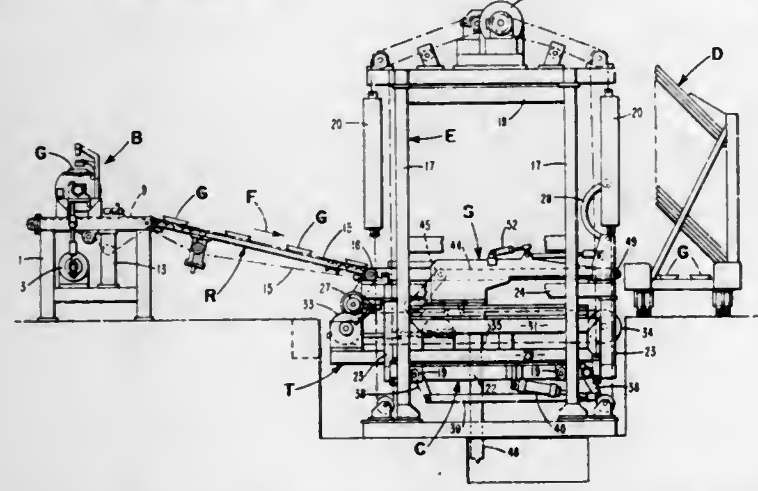

1. An apparatus for automatically transferring a plurality of separate objects which may be in a plastic condition, either individually or in groups of two or more elements between a collecting plane and a storing plane, said storing plane belonging to a structure presenting a plurality of identical storing planes each one movable from an inclined position to a horizontal one, and being vertically apart one from the other when in said horizontal plane, said apparatus comprising

a first transporting device, vertically movable, provided with a first supporting surface, mobile in a given direction, capable of receiving said section or sections of said collecting plane and to transport it or them to the vicinity of said storing plane,

a second transporting device, alternatively movable in both senses of said given direction, between said first transporting device and said storing plane, provided with a second supporting surface, capable of receiving said section or sections, from said first supporting surface, mobile in said given direction, the dimension of which in said direction, defined as length of the surface, is sufficient to contain the maximum number of said sections which must be deposited on said storing plane,

devices, for carrying into effect the transferring of said section or sections, from the first supporting surface to said second supporting surface wherein said second supporting surface is disposed under said first supporting surface, at least partially in correspondence with the latter, means to displace said second surface from said underlying position to an overhanging position with respect to the first surface and means to allow the second supporting surface pass through the first one every time said second surface is displaced between said underlying and overhanging positions,

means to regulate said alternative movements of said second transporting device with respect to the first one,

means to regulate the movements of said second supporting surface,

means to regulate the length of said second supporting surface, said means being able to transport said section, or sections, above said storing plane, to stop it or them in a position, fixed with respect to said storing plane, above it, and to remove said second supporting surface from below the section, or sections, whereby the or these latter no longer supported, falls or fall on said underlying storing plane.

4,062,459

CONVEYOR FOR HEAT TREATING FURNACE

James R. Robertson, Buffalo, N.Y., assignor to Harper Electric Furnace Corporation, Lancaster, N.Y.

Filed Dec. 31, 1975, Ser. No. 645,570

Int. Cl.² F27B *9/38*

U.S. Cl. 214—21 **10 Claims**

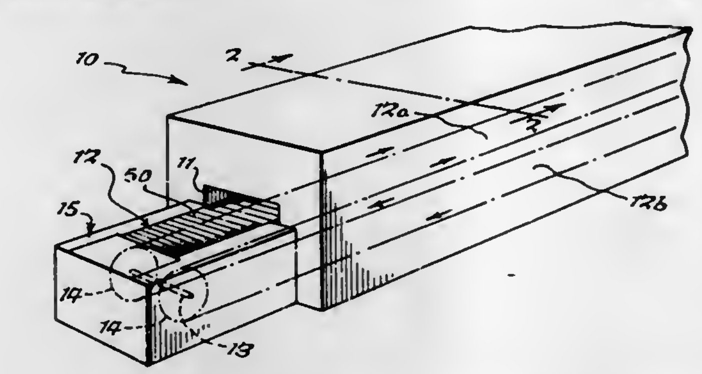

1. In a heat treating furnace, a conveyor for moving articles to be heated through said furnace, said conveyor comprising:

a. drive means;

b. means defining a conveyor path in said furnace;

c. support means drivenly connected to said drive means and extending along said path in said furnace for movement along said path;

d. a plurality of heat insulating elements connected to said support means and arranged side-by-side along said path, each of said insulating elements being of flexible ceramic fiber heat insulating material of relatively low density and low heat storage capacity to provide a heat insulating barrier for said conveyor support means and;

e. each of said heat insulating elements extending across the entire width of said conveyor and each element being formed with a shoulder at each end thereof, there being a shoulder structure in said furnace adjacent said conveyor path defining means for cooperation with said shoulders of said heat insulating elements to prevent direct exposure of portions of said conveyor inwardly of said shoulders to the heat of said furnace.

4,062,460

GATE OPERATING MECHANISM FOR A HOPPER CAR

Franklin P. Adler, Michigan City, Ind., assignor to Pullman Incorporated, Chicago, Ill.

Filed July 19, 1976, Ser. No. 706,718

Int. Cl.² B65G *67/24*

U.S. Cl. 214—58 **6 Claims**

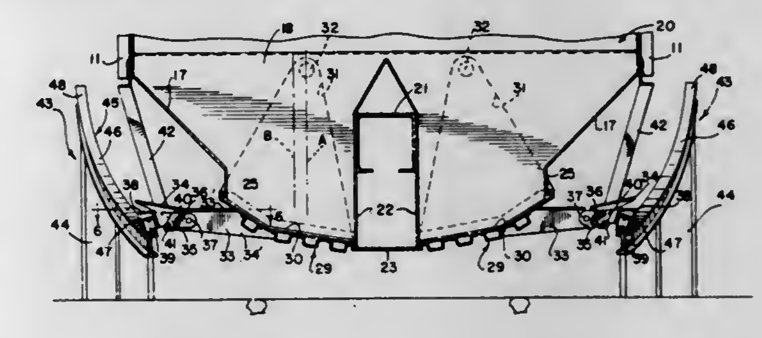

1. For a railway car including a hopper having a bottom bulk discharge opening and sides having inwardly sloping bottom walls, a door assembly operatively associable with a rising trackside camming ramp, including:

a door movable between a closed position covering said opening and an open position to one side of the opening,

hinge means supporting the door on the hopper for pendulous movement between said open and closed positions on an axis gravitationally biasing the door to the closed position,

a rigid arm on the door cantilevered outwardly therefrom and arresting means on upper portion of said arm, and

a locking mechanism for locking the door in the closed position comprising a locking lever including locking means, said lever being movably connected to said arm for vertical swinging movement with respect thereto, catch means on the car engageable by said locking means for restraining the arm against dooropening swinging movement, a cam follower mounted on said locking lever engageable with the camming ramp for serially lifting the lever to a position releasing said locking means from sai catch means and thereafter liftingly engaging the said arresting means on the upper portion of said arm for raising the arm and thereby moving the door to its open position as the cam follower moves along the ramp.

4,062,461

HAY BALE LOADER

Herman C. Vincent, Jet, Okla. 73749

Filed Dec. 1, 1976, Ser. No. 746,571

Int. Cl.² B60P *3/00*

U.S. Cl. 214—85.5 **1 Claim**

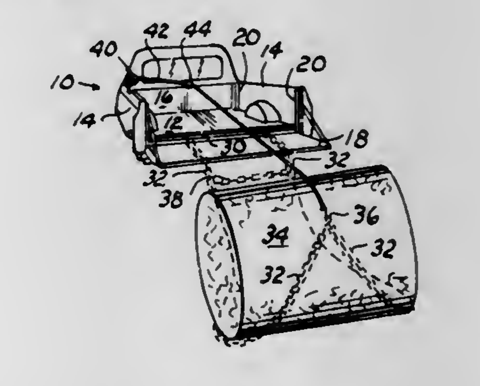

1. Loading apparatus in combination with a pickup truck for large size, generally cylindrical, bales of hay, or the like, said pickup truck having a load supporting bed defined by generally vertical side walls terminating rearwardly to define a rearward open end and having a side wall standard vertically

secured to the inner surface of the rearward end portion of each side wall, the improvement comprising:
- an elongated bar extending transversely across the rearward end portion of said bed forwardly of said standards;
- a pair of elongated flexible members secured at one end, in spaced-apart relation, to said bar,
  - said members extending rearwardly of said pickup truck in parallel relation normal to the longitudinal axis of a cylindrical hay bale to be loaded and being entrained, intermediate their ends adjacent the surface of the earth, around opposing ends of a hay bale to be loaded with the terminal end portions of said flexible members contacting the circumferential portion of a hay bale to be loaded opposite said pickup truck;
- a cross member extending transversely between said flexible members adjacent that side of a hay bale to be loaded facing said pickup truck; and,
- winch means supported by a forward end portion of said pickup truck,
  - said winch means having a winch line connected, at its end opposite the winch when payed out, with the other ends of said flexible members and entrained over the hay bale to be loaded,
  - whereby winding up said winch line generates a rolling action on a hay bale to be loaded for disposing it on said flexible members and a subsequent lifting action onto said pickup truck bed.

4,062,462
METHOD FOR ORIENTING AN ARTICLE
Lyle J. Hentz, Whitehall, and Willard G. Otto, Schnecksville, both of Pa., assignors to Western Electric Co., Inc., New York, N.Y.
Division of Ser. No. 414,481, Nov. 9, 1973, Pat. No. 3,982,979, which is a continuation-in-part of Ser. No. 374,436, June 28, 1973, abandoned. This application July 6, 1976, Ser. No. 703,031
Int. Cl.² B65G *47/24*
U.S. Cl. 214—152 **4 Claims**

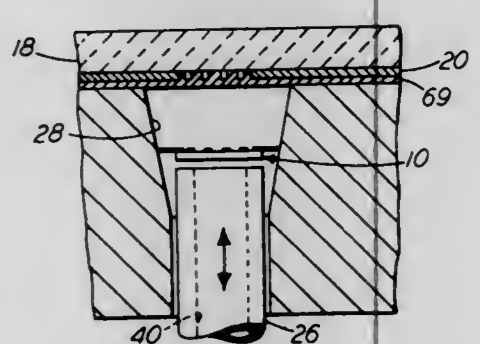

1. A method of orienting one of a plurality of articles without the use of a fluid for supporting the article, each of said articles having possible different dimensions one with respect to others, comprising the steps of:
- placing the article on a member associated with a locating and orienting cavity having dimensions smaller than the dimensions of the smallest article; and
- engaging the article intermittently with the walls of the cavity while lowering the member and the article into the cavity to locate and orient the article at a point above the lower end of said cavity.

4,062,463
AUTOMATED SINGLE CASSETTE LOAD MECHANISM FOR SCRUBBER
Gary Hillman, Livingston, and Michael J. Devico, Chatham, both of N.J., assignors to Machine Technology, Inc., East Hanover, N.J.
Filed May 11, 1976, Ser. No. 685,303
Int. Cl.² B65H *1/06*
U.S. Cl. 214—301 **17 Claims**

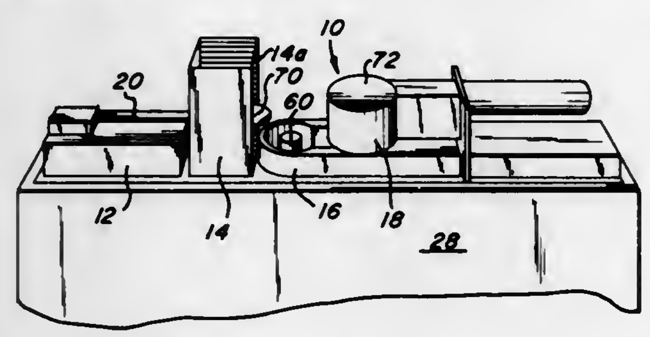

1. Apparatus for transferring a selected one of a plurality of silicon wafers from within a cassette containing said wafers to a scrubbing station, comprising:
- a frame;
- said frame comprising a scrubbing station;
- cassette-receiving means for receiving a cassette in a position adjacent to said scrubbing station;
- selection means for selecting one of the silicon wafers contained in said cassette which is to be transferred to said scrubbing station; and
- a wafer-transfer arm operatively associated with said selection means and movable between a retracted position and said scrubbing station for moving said selected one of said silicon wafers from its position within said cassette to said scrubbing station and for returning said one silicon wafer from said scrubbing station to said cassette, said cassette being longitudinally aligned between the retracted position of said wafer-transfer arm and said scrubbing station on said frame.

4,062,464
MOUNTING BRACKETS FOR AN ARTICLE HANDLING APPARATUS
Russell E. Grove, 1440 W. Bullard, Fresno, Calif. 93711
Filed Oct. 20, 1976, Ser. No. 734,138
The portion of the term of this patent subsequent to May 4, 1993, has been disclaimed.
Int. Cl.² B60R *9/04*
U.S. Cl. 214—450 **2 Claims**

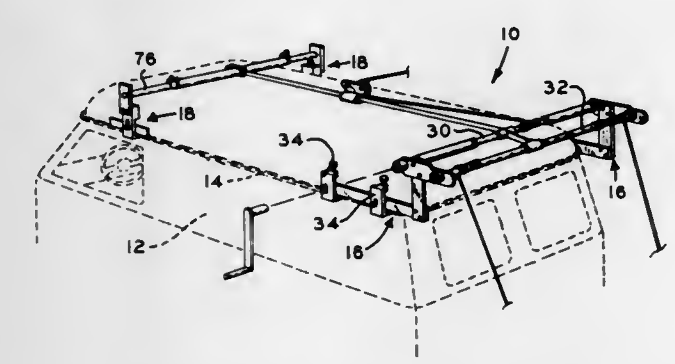

2. In an apparatus particularly suited for use in stowing a boat or the like atop an overland vehicle characterized by a drip mold including a channel having a horizontally projected bottom segment extended along a top portion of the vehicle, the improvement comprising:
- a pair of mounting brackets for supporting a member adapted to be transversely related to the vehicle, each bracket of said pair being characterized by an elongated base member having a thickness such that the base member is receivable within the channel of the drip mold and adapted to seat on the upper surface of the bottom segment thereof, an upright member rigidly affixed to the base member including means provided in spaced relation with said base member for receiving said transverse member, means defining a clamp having a body provided with a first projected protuberance disposed above the base member in spaced relation therewith, means defining in said body a vertically slotted opening and a stud mounted on said base member and extended horizontally through the opening having a nut received at its distal end adapted to be releasably tightened for joining the clamp to the base member and for accommodating vertical adjustment of the body of the clamp relative to the base member, a screw threaded bore extended vertically through the protuberance having a jack screw disposed therein and extended in the plane of the base member into an abutting relation therewith for vertically adjusting the position of the body of the clamp relative to said base member, means defining on said body a second protuberance projected beneath said base member for engaging the lower surface of the bottom segment of the drip mold as the base member is seated on the upper bottom surface thereof for clamping the bottom segment of the drip mold between said base member and said second protuberance of the clamp as the position of the body of the clamp is adjusted relative to said base member, and a lip projected from the body of the clamp into engaged relation with said base member for supporting said clamp against horizontal movement toward said base member as said nut is tightened on said stud.

4,062,465
POWERED LOADING SYSTEM
George N. Kovatch, Monroeville; Ronald E. Vaill, Irwin, and William E. Kepes, Trafford, all of Pa., assignors to Westinghouse Electric Corporation, Pittsburgh, Pa.
Filed Mar. 15, 1976, Ser. No. 666,811
Int. Cl.² B60P *1/64*
U.S. Cl. 214—516 **7 Claims**

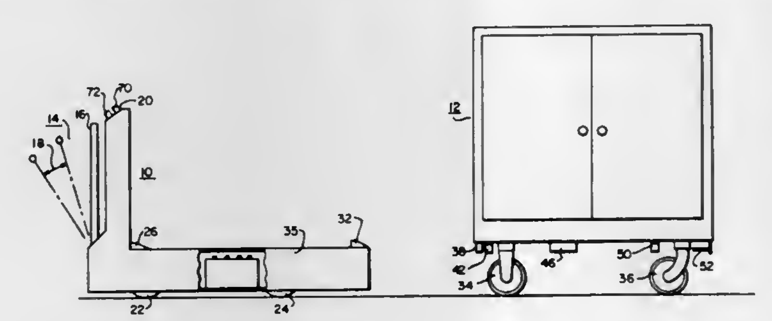

1. A powered loading system comprising in combination:
- a modular member comprising a plurality of rollers and probe means;
- a transport vehicle for receiving said modular member, comprising ramp means for engaging said rollers;
- motor means, a linear displacement means, a block assembly and a hook means on said transport vehicle, said motor means being coupled to said linear displacement means, said linear displacement means being coupled to said block assembly, said block assembly supporting said hook means and including means assisting in the displacement of said hook means in an arcuate path, whereby when said rollers are in position and displacement is impending on said ramp means, said motor means is actuated for directional rotation, and said hook means engages and disengages with said probe means to raise and lower said modular member with respect to said ramp means for respectively loading and unloading said modular member with reference to said transport vehicle.

4,062,466
TAMPER-PROOF CLOSURE CAP WITH SELF-REMOVING RING
Vincent N. Conti, West Hempstead, N.Y., assignor to Dairy Cap Corporation, Long Island City, N.Y.
Filed Oct. 7, 1976, Ser. No. 730,591
Int. Cl.² B65D *41/34*
U.S. Cl. 215—252 **6 Claims**

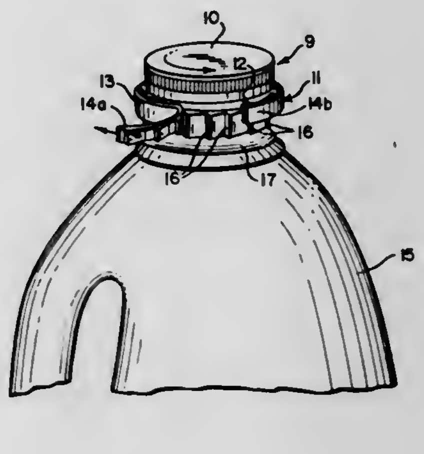

1. A tamper-proof container closure for a container having a threaded mouth portion and a plurality of teeth members adjacent said mouth portion, said closure comprising:
- a threaded cap for engaging the mouth portion of said container;
- a split ring having a pair of separated ends frangibly coupled to said threaded cap, said split ring including a plurality of pawls for interlockably engaging said plurality of teeth members on said container when the closure is rotated in the direction of cap twist off and the portion of said split ring adjacent to one end being free of engagement with said cap for a substantial length in the direction opposing cap twist off.

4,062,467
COLLAPSIBLE TRANSPORT CONTAINER
Wolfgang E. Friedrich, Burgsteinfurter Damm 1, 4442 Bentheim, Germany
Continuation of Ser. No. 541,576, Jan. 16, 1975, abandoned. This application June 8, 1976, Ser. No. 693,877
Claims priority, application Germany, July 27, 1974, 2436254
Int. Cl.² B65D *7/24*
U.S. Cl. 220—7 **2 Claims**

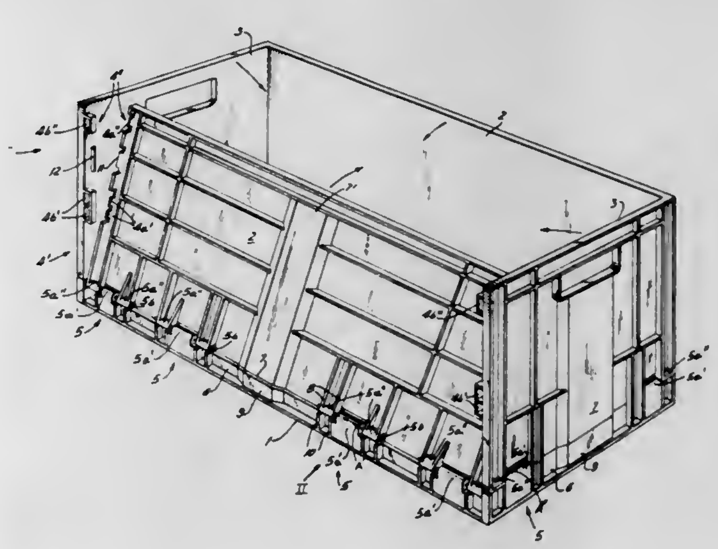

1. In a transport container comprising:
- a rectangular base plate having four edges and an upstanding rim extending around said edges;
- a respective wall along each of said edges mounted on said base plate, said walls being provided in two pairs of opposite walls and being reversibly swingable from an erect position in which said walls are perpendicular to said base

plate to recumbent positions wherein said walls overlie said base plate and lie upon one another;
arcuate grooves formed on inner faces of the walls of one pair and a pair of outwardly projecting pins formed on the edges of the walls of the other pair guided in said grooves to enable outward swinging of the walls of said other pair along said one pair after the latter have been swung into their erect positions;
respective mating latch formations along the angularly adjoining edges of said walls for engagement when the walls of said other pair are swung into their erect positions; and
respective hinges swingably mounting each of said walls to said base plate with the hinge axes of said one pair being disposed above the hinge axes of said other pair;
the improvement wherein:
one wall of each of the angularly adjoining edges is formed with a pair of sockets located respectively above and below said latch formations;
the other wall of each of the angularly adjoining edges is formed with a pair of projections located other than said pins respectively above and below said latch formations matingly engageable with the respective sockets of the first mentioned wall of each of the angularly adjoining edges;
said sockets and projections at each of the angularly adjoining edges being disposed one above the other;
said sockets and projections are so constructed and arranged that, at each of the angularly adjoining edges, the lower projection is received in its socket before the upper projection is received in its socket as said other pair of walls are swung into their erect positions;
said latching formations at each of the angularly adjoining edges are spaced above the respective lower projection and socket and below the respective upper projection and socket; and
said latching formations at each of the angularly adjoining edges are so constructed and arranged as to engage subsequent to the entry of the respective lower projection and its socket but prior to the entry of the respective upper projection into its socket as the walls of said other pair are swung into their erect positions.

4,062,468
FUEL STORAGE TANK INSULATING SYSTEM
John P. Bongiovanni, 19 Bates Road, Chester, Conn. 06412
Filed Mar. 23, 1977, Ser. No. 780,687
Int. Cl.² B65D *25/34;* **E04B** *1/80*
U.S. Cl. 220—9 A **11 Claims**

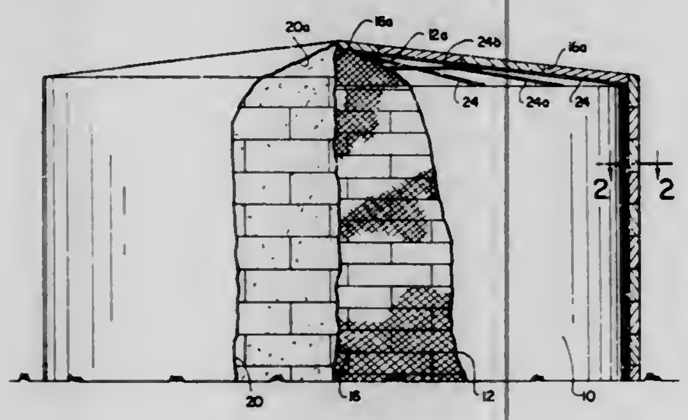

1. A system for insulating a cylindrical fuel storage tank or the like, said system comprising:
a. an inner structural layer attached to the cylindrical wall of the tank said inner layer including a plurality of individual expanded metal lath sheets which are bonded to the existing exterior of the tank,
b. an intermediate insulating layer attached to said inner layer, said insulating layer including a plurality of foam board sheets which are bonded to the expanded metal lath sheets with gobs of mastic material arranged in a pattern such that the gobs are spaced from one another horizontally and vertically, and
c. an outer layer attached to said insulating layer, said outer layer including a resin impregnated cloth fiber reinforced coating bonded to said foam board sheets by said resin.

4,062,469
ELECTRONIC INSTRUMENT CASE
Gunter Rueb, Laguna Niguel, Calif., assignor to American Zettler, Inc., Irvine, Calif.
Filed Dec. 27, 1976, Ser. No. 754,440
Int. Cl.² B65D *41/32*
U.S. Cl. 220—268 **5 Claims**

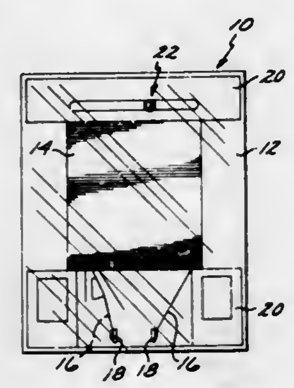

1. An electronic instrument case comprising in combination, an enclosure having a wall formed of breakable material and adapted to receive an appropriate electronic instrument,
the wall of said enclosure having a section of reduced thickness formed by a generally tapered continuous surface which provides maximum enclosure wall thickness remotely of said reduced thickness and minimum enclosure wall thickness thereat,
said tapered surface being formed exteriorly of said enclosure to provide said reduced section at the interior thereof,
said section including at the interior surface of said enclosure a continuous offset at the reduced thickness,
and a retaining member of varying thickness attached to both said reduced thickness section and to the remainder of said wall to retain said reduced section attached to said wall after it is manually broken inwardly of said enclosure.

4,062,470
ELECTRICAL OUTLET BOX MOUNTING ASSEMBLY
William C. Boteler, Northport, N.Y., assignor to Slater Electric Inc., Glen Cove, N.Y.
Filed Aug. 4, 1976, Ser. No. 711,516
Int. Cl.² H02G *3/08;* **F16B** *2/24*
U.S. Cl. 220—3.3 **15 Claims**

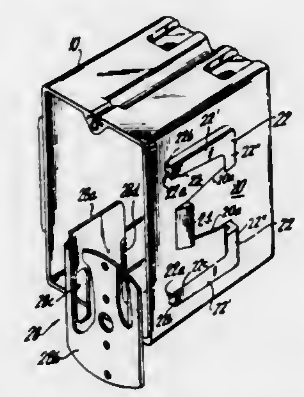

1. An electrical outlet box mounting assembly which includes:
at least one generally flat sidewall portion on an electrical outlet box having a generally open front face;
a mounting bracket having an essentially flat attaching portion and a mounting portion adapted to be secured to a suitable support structure for mounting the box thereto;

slot means formed on said sidewall portion, said slot means adapted for slidably receiving and retaining said flat attaching portion of said bracket when inserted thereinto;
first stop means formed on said sidewall portion for preventing insertion of said attaching portion beyond a predetermined point;
restraining means formed on said sidewall portion, said restraining means providing a detent surface; and
receiving means formed in said attaching portion, said receiving means proportioned to generally surround said restraining means when said attaching portion is essentially fully seated in said slot means with said detent surface generally abutting an edge of said receiving means, said restraining means and said receiving means being proportioned to permit insertion of said attaching portion into said slot means yet substantially prevent withdrawal of said attaching portion from said slot means once said attaching portion is essentially fully seated in said slot means, such that said mounting bracket is lockably engageable in said slot means without threaded fasteners whereby the electrical outlet box can be mounted to the support structure by securing said mounting portion thereto.

4,062,471
CONTAINER WITH ATTACHED CLOSURE
Walter Merton Perry, deceased, late of 76 Locust Hill Road, Darien, Conn. 06820, by Elizabeth D. Perry, executrix
Continuation-in-part of Ser. No. 712,839, Aug. 9, 1976, and a continuation-in-part of Ser. No. 515,444, Oct. 17, 1974, which is a continuation-in-part of Ser. No. 231,124, March 2, 1972, Pat. No. 3,843,011, which is a continuation-in-part of Ser. No. 514,069, Oct. 11, 1974, Pat. No. 3,952,912, which is a continuation-in-part of Ser. No. 231,124, March 2, 1972, Pat. No. 3,843,011. This application Aug. 26, 1976, Ser. No. 717,993
Int. Cl.² B65D *41/32*
U.S. Cl. 220—269 **19 Claims**

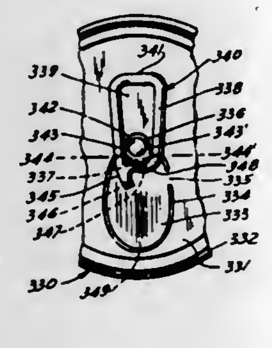

1. An improved easy open container having a top with easy opening means therein, and said easy opening means comprising,
an openable segment of generally rounded corner shape in said container top and with said segment defined by a weakening score line which extends most of the way around the periphery of said segment, but with said score line interrupted at a point to leave an unscored section of said periphery, and said unscored section providing an integral hingeable attachment means to anchor said segment to said container top after opening of said segment,
said openable segment having an outer end extending toward the peripheral border of said container top, and an inner end extending toward the inner region of said top, and said unscored section of said score line positioned along one side of said segment, and being closer to said inner end than to said outer end of said segment,
a leverage lift tab for manual opening of said openable segment, and having rivet securement means positioned along its length to permanently secure it to said container top, and with flexible upwardly hingeable connection means between the main body of said lift tab and said rivet, and with said rivet securement means positioned on said top just outward of said openable segment and close to said score line and in the region of said inner end of said segment, and said lift tab having a longer outer lift end extending beyond said segment and closely overlying said top mainly outward of said segment, and having s shorter inner downward pressure exerting end means extending over only a part of said segment and said part located in its inner end region, and
said inner downward pressure exerting end means of said lift tab having pressure contact means whereby when said outer lift end of said lift tab is manually raised, said pressure contact means will tilt downward and exert high downward pressure on said segment and cause rupture along said score line, and will bend said segment down into said container where it remains anchored to said top by said hingeable unscored section, and whereby an opening is formed in said container top suitable for outflow of the contents of said container.

4,062,472
LIQUID DISPENSING SYSTEM
Frank Taube, Southfield, Mich., assignor to Dominion Tool & Die Co., Inc., Roseville, Mich.
Filed July 9, 1976, Ser. No. 704,014
Int. Cl.² B67D *1/08*
U.S. Cl. 222—1 **6 Claims**

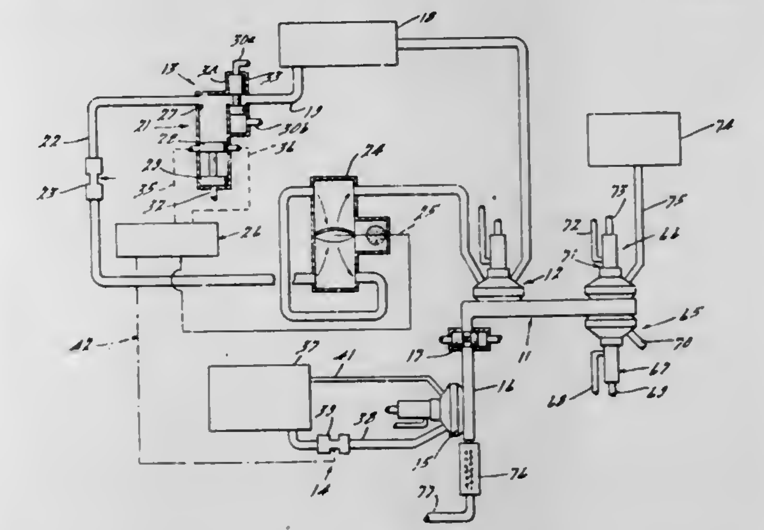

5. A system for dispensing a liquid from a manifold comprising a plurality of flow control valves, having their outlet sides communicating with said manifold, a discharge, said discharge being connected to said manifold at a point spaced from said flow control valves, each of said flow control valves being movable between an open position and a closed position, a purging valve communicating with said manifold between said flow control valves and said discharge, said purging valve being movable between an open position and a closed position for introducing a purging fluid into said manifold, and control means for sequentially moving respective of said flow control valves from its open position to its closed position and said purging valve from its closed position to its open position for purging said manifold of the dispensed liquid at the completion of a dispensing cycle.

4,062,473
CHEMICAL DISPENSING ANTI-BURGLAR BOOBY TRAP DEVICE
Charles R. Fegley, 1606 Fresh Valley Road, Laureldale, Pa. 19605
Continuation-in-part of Ser. No. 451,091, March 14, 1974, abandoned. This application Mar. 24, 1976, Ser. No. 670,059
The portion of the term of this patent subsequent to Jan. 6, 1993, has been disclaimed.
Int. Cl.² B67B *7/24*
U.S. Cl. 222—5 **18 Claims**

1. A chemical dispensing anti-burglar booby trap device for use with a pressurized container having a fluid-dispensing

element adapted to release fluid under pressure when actuated, the device comprising:

a. a body member mounted on support means;
b. means for supporting said pressurized container in said body member;
c. an actuating member slidably supported in said body member, a fluid passageway contained within said actuating member and arranged to extend through a wall of said body member, said passageway having an entry section at one end thereof and an adjustable dispensing head on the other end thereof;
d. dispensing element actuating means mounted on said actuating member and adapted to engage and actuate said fluid-dispensing element;
e. spring means biased to force said fluid-dispensing element and said dispensing element actuating means into engagement with each other, thereby causing said fluid-dispensing element to be actuated;

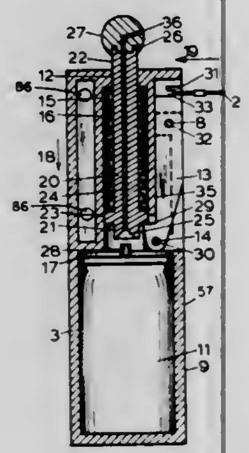

f. a means for forming a seal between said fluid dispensing element and said entry section whereby fluid will be discharged therethrough from said container into said passageway, said seal being formed upon movement of said actuating member when said actuating member is released;
g. trigger means adapted to releasably retain said spring means in a cocked position in which said fluid-dispensing element and said dispensing element actuating means are separated from each other;
h. trigger-actuating means associated with said trigger to actuate said trigger upon the application of force to said trigger-actuating means, whereby said spring is released from its cocked position causing said fluid-dispensing element to be actuated, and fluid under pressure is released from said container to pass through said passageway.

4,062,474
APPARATUS FOR METERED FEEDING OF POORLY FLOWABLE MATERIALS
Oskar Herbold, Meckesheim, Germany, assignor to Helma Lampl, Sinsheim-Rohrbach, Germany
Filed May 5, 1976, Ser. No. 683,412
Claims priority, application Germany, May 9, 1975, 2520755
Int. Cl.[2] B30B *5/04*; G01F *11/10*
U.S. Cl. 222—36 **17 Claims**

16. An apparatus for the metered feeding of flowable solid material from a delivery station to a sacking station by means of an endless conveyor belt means having an upper and lower run said apparatus comprising:

a conveyor housing having an inlet and an outlet, and downstream of said inlet and upstream of said outlet a metering zone;
a plurality of spaced carrier plate means disposed transversely on said conveyor belt means each having an inwardly and an outwardly disposed edge, the inwardly disposed edges of the plate means on the upper run of said conveyor belt means being disposed opposite the inwardly disposed edges of the plate means in the lower run of the conveyor belt means, adjacent pairs of said plates defining pockets for carrying said material; and

stripping means disposed in said metering zone, said strip-

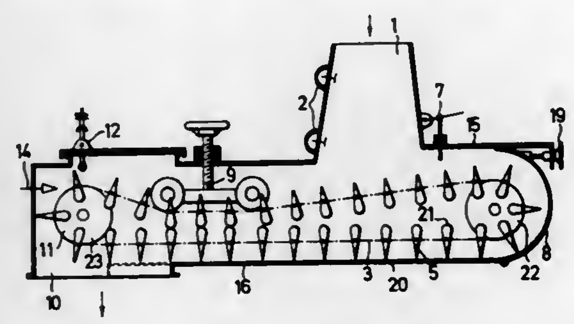

ping means being associated with said oppositely facing inwardly disposed edges of said carrier plate means on the upper and lower runs of the conveyor belt means for volumetrically restricting said material in each said pocket in said metering zone.

4,062,475
PRESSURIZED CONTAINER FOR TWO-PHASE SYSTEM
Robert G. Harris, and James A. Monson, both of Racine, Wis., assignors to S. C. Johnson & Son, Inc., Racine, Wis.
Filed Apr. 25, 1975, Ser. No. 571,673
Int. Cl.[2] B65D *35/28*
U.S. Cl. 222—95 **8 Claims**

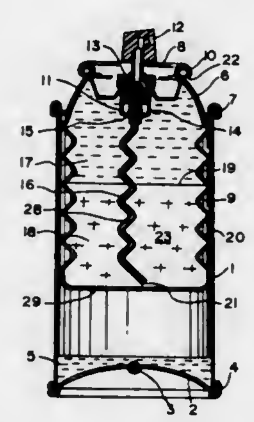

1. In a pressure package of the type having:
a generally rigid container,
a liner within said container forming a reservoir containing a product to be dispensed under the influence of a propellant outside said reservoir said propellant being contained in a closed chamber; and
valve means closing said container, said valve means defining first and second orifices in communication with said reservoir and wherein said first communicating means is said first orifice and said second communicating means includes said second orifice;
the improvement which comprises said product having a first non-gaseous fluid phase and a second non-gaseous fluid phase, said phases being substantially immiscible and having different densities to form a phase boundry within said reservoir, said first phase having a lower density than said second phase, first means for communicating said first phase to said valve; and second means for communicating said second phase to said valve, said second communicating means including a dip tube which extends below said phase boundry said dip tube being sufficiently flexible to be deformed by the contraction of said liner under the influence of said propellant, said first and second communicating means being independent so that said first phase and said second phase remain substantially unmixed until said phases are delivered by said communicating means to said valve means.

4,062,476
ICE DISPENSER WITH ROTATABLE SUPPLY CONTAINER
Derek A. Brand, Naperville; Rouben T. Terzian, and Douglas P. Montague, both of Chicago, all of Ill., assignors to Marvin Glass & Associates, Chicago, Ill.
Filed Dec. 4, 1975, Ser. No. 637,709
Int. Cl.[2] B67D *5/64*
U.S. Cl. 222—131 **12 Claims**

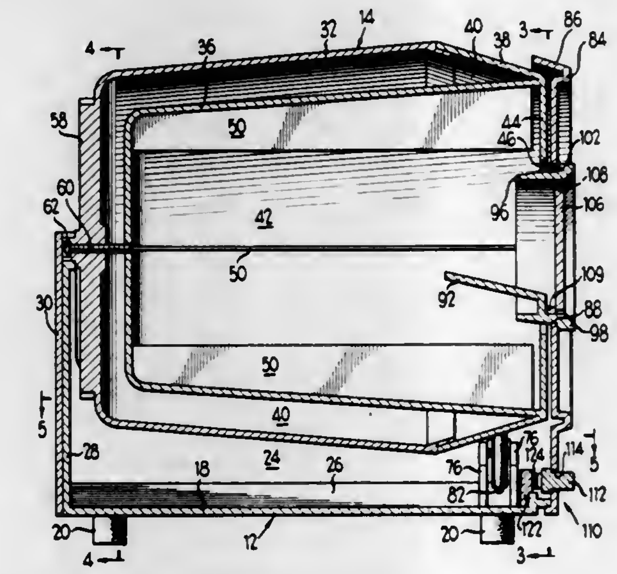

9. A dispenser comprising:
a frame;
a housing defining an interior receptacle for storing particles, said receptacle being tapered from a closed end having a predetermined transverse cross sectional area to a discharge end having a larger transverse cross sectional area;
a front wall having a discharge opening therein provided on the larger end of said tapered receptacle;
means mounting said housing and receptacle on the frame for rotation about a generally horizontal axis; and
dispensing means including at least one generally radially directed inwardly extending agitating member on the interior of said receptacle, said member including at least a portion thereof adjacent said front wall and a stationary deflector mounted on the frame for projecting through said discharge opening into the interior of said receptacle, said deflector comprising an upwardly directed chute portion for deflecting agitated particles outwardly of said receptacle through the discharge opening in the front wall as said housing is rotated.

4,062,477
CONTAINER HAVING FLEXIBLE WALLS AND TWO CHAMBERS WHICH ARE KEPT SEPARATE UNTIL THE CONTAINER IS OPENED
Bruno Morane, Paris, France, assignor to L'Oreal, Paris, France
Filed Nov. 30, 1973, Ser. No. 420,710
Claims priority, application France, Dec. 22, 1972, 72.45951
Int. Cl.[2] B65D *83/00*
U.S. Cl. 222—145 **9 Claims**

1. Container having flexible walls and a relatively narrow neck separated from the remainder of said container by a transverse wall provided with a central orifice, a plug in said orifice, and external means on said neck for attaching thereto a cap which closes the space within the neck above said separating wall, wherein the improvement comprises a collar along the edge of said orifice, said plug being frictionally retained in said collar and having the form of a cup, the bottom of which cup is directed toward the portion of the container having flexible walls, said plug forming with said wall and collar the sole fluid-tight barrier preventing the passage of liquid from the remainder of said container into said neck, said plug being made of a rubbery material and having an external shape mating with that of the collar, each radial dimension of the plug, when uncompressed, having a length between 1.01 and 1.07 times that of the corresponding radial dimension of the inner

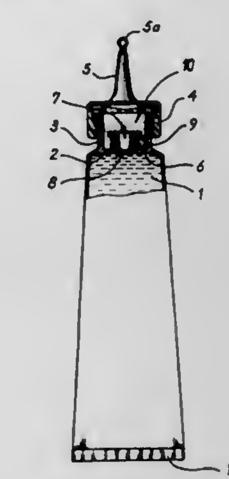

wall of the collar, said plug being coated on at least its external surface by a fine layer of lubricant permitting its expulsion from said collar when pressure is exerted on said flexible walls.

4,062,478
VALVES FOR AEROSOL CONTAINERS
Giancarlo Giuffredi, Piazza Firenze 6, Milan, Italy
Continuation-in-part of Ser. No. 577,871, May 15, 1975. This application Dec. 17, 1976, Ser. No. 751,949
Claims priority, application Italy, May 21, 1974, 23016/74
Int. Cl.[2] B65D *83/14*
U.S. Cl. 222—402.16 **8 Claims**

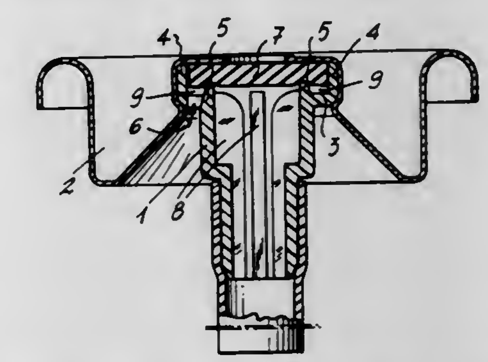

1. A filling valve for an aerosol container or the like, comprising endless channel means surrounding a predetermined axis and having a transverse wall, an inner rim projecting from an inner region of said transverse wall and an outer rim projecting from an outer region of said transverse wall to an extent greater than said inner rim, said transverse wall being formed with at least one opening passing therethrough, a mounting cup having a central wall portion extending transversely with respect to said axis and engaging said outer rim at an edge thereof distant from said transverse wall of said channel means and extending inwardly from said outer rim toward said axis, said central wall portion of said mounting cup being formed with a central opening through which said axis extends and said central wall portion of said mounting cup having an inner peripheral edge defining said central opening and situated closer to said axis than said inner rim, said central wall portion of said mounting cup being spaced from said inner rim to define a gap therewith and said mounting cup having at the outer periphery of said central wall portion an axially extending wall portion extending along an outer surface of said outer rim and rigidly fixed therewith, and resilient, deformable, compressible seal means compressed between said inner rim and said central wall portion of said mounting cup and having in a rest position an outer peripheral edge extending along and situated directly next to an inner surface of said outer rim, said seal means responding to high pressure fluid which is to be filled into a container to be compressed thereby toward said inner rim, while the position of the latter with respect to said mounting cup remains substantially unchanged, away from said central wall portion of said mounting cup to define with

the latter a space through which the high pressure fluid can enter from said central opening of said transverse wall portion of said mounting cup through said space and past the peripheral edge of said seal means and through said opening in said transverse wall of said channel means into the interior of a container on which said mounting cup is mounted, said seal means deflecting at its outer peripheral edge in response to the high pressure fluid toward said transverse wall of said channel means to become situated at least in part in said channel means between said inner and outer rims thereof during filling of the container with the high pressure fluid, whereby said transverse wall of said channel means also has a position which remains substantially unchanged with respect to said mounting cup during filling of the container with high pressure fluid.

4,062,479
NON-RETURN VALVE ASSEMBLIES IN INJECTION MOLDING MACHINES
Bela G. Szabo, Carnegie, Pa., assignor to Bruce Plastics, Inc., Pittsburgh, Pa.
Filed Oct. 14, 1976, Ser. No. 732,390
Int. Cl.² B29F *1/04*
U.S. Cl. 222—495 **12 Claims**

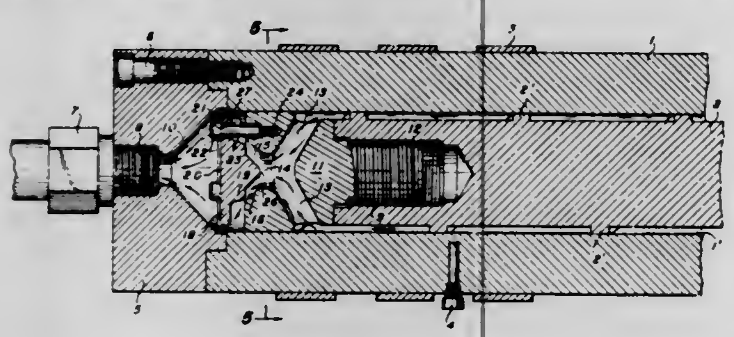

1. In injection molding apparatus for thermoplastic material having a heated cylindrical barrel containing a rotating and reciprocating feedscrew therein for feeding the molten and fluid thermoplastic material therethrough past a non-return check valve, towards a discharge chamber at the forward end of said barrel, said non-return check valve comprising

a. a main valve element comprising a valve body mounted on the forward end of said feedscrew having a plurality of equidistantly distributed cylindrical passages therein extending from the periphery of the feedscrew with forward inclinations towards the center thereof,

b. an auxiliary valve element comprising a reciprocable circular valve plate movably mounted relative to the front face of said valve body, of smaller diameter than said barrel, for directing outwardly and radially the thermoplastic material issuing through said valve body into said discharge chamber, and

c. a convexly contoured annular protuberance of one of said valve elements cooperating with the adjacent surface of the other valve element to provide a smoothly streamlined passage for the fluid material in the course of the rearward and rotary movement of said feedscrew to effect the radial inflow of the material into said chamber, and to form a sealing dam against the reverse flow of the fluid material within said barrel in response to the forward reciprocating movement of said feedscrew which effects the ejection of said fluid material from said chamber.

4,062,480
VALVE WITH DRAW BACK AFTER CLOSING
Curt Arnold Bjorklund, Box 99, Ulricehamn, Sweden
Division of Ser. No. 334,559, Feb. 22, 1973, Pat. No. 3,886,974. This application Mar. 15, 1975, Ser. No. 675,097
Claims priority, application Austria, Mar. 3, 1972, 1826/72; Sweden, Nov. 27, 1972, 15402/72
Int. Cl.² B67D *5/04*
U.S. Cl. 222—571 **6 Claims**

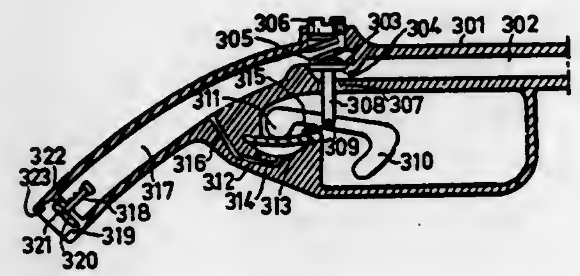

1. A valve device for a fluid line comprising
a valve chamber,
a fluid inlet to said valve chamber,
a fluid outlet from said valve chamber, said outlet being provided with a non-return valve and an outer ring cavity,
a pressure chamber which includes a movable barrier member that functions as a piston,
a channel connecting one side of said pressure chamber with the main fluid passageway between said inlet and outlet,
a valve body positioned between said inlet and outlet,
a pressure spring acting upon one side of valve body,
a spindle linked to the other side of said valve body,
a lever means having one end that is designed as a squeezer, having the other end designed to periodically influence the movable barrier member in said piston chamber under the influence of manual pressure, and having an intermediate portion between said ends that it attached to said spindle,

whereby when said squeezer end of said lever means is moved so as to cause said valve body to close to cut off fluid flow between said inlet and outlet, the other end of said lever means will cause said barrier member to move so as to create a reduced pressure in said pressure chamber, which in turn will cause a fluid between said fluid outlet and valve body to be sucked up into said channel that connects one side of said pressure chamber with the fluid passageway between said inlet and outlet.

4,062,481
PISTOL HOLSTER
Earl J. Clark, Frederick, Md., assignor to Tandy Brands, Inc., Fort Worth, Tex.
Filed May 5, 1976, Ser. No. 683,289
The portion of the term of this patent subsequent to Apr. 13, 1990, has been disclaimed.
Int. Cl.² F41B *13/04*
U.S. Cl. 224—2 B **5 Claims**

1. A revolver holster comprising:
an outer and an inner piece of material;
each piece having lateral wings;
the holster having a belt-receiving slot extending only through each wing of the inner piece;
the pieces being joined together in overlying relationship intermediate, on the top, and on the bottom of the wings, defining a revolver-receiving pocket;

the pieces remaining unjoined at the lateral edges of the wings, defining belt-receiving openings;

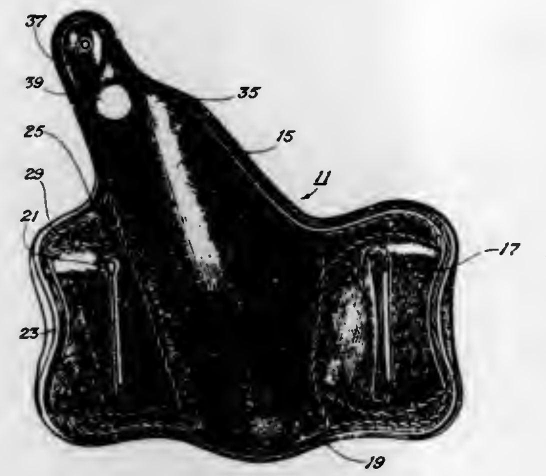

whereby the holster is carried on a belt by passage of the belt through the openings and slots, with no portion of the belt being on the exterior side of the outer piece.

4,062,482
INTEGRALLY FORMED BALL CARRIER
Norman Szalony, 8326 Evangeline, Dearborn Heights, Mich. 48127
Filed Nov. 26, 1975, Ser. No. 635,678
Int. Cl.² A45F *5/02*
U.S. Cl. 224—5 D **5 Claims**

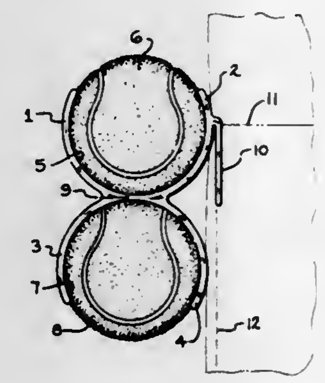

1. A device for readily and removably holding at least one arcuate object, comprising:
a clip member for removably attaching said device to an item worn by a user thereof;
said clip member having its major surface disposed in a predetermined plane;
said major surface of said clip member having a major elongated longitudinal central axis;
at least one first arcuate object-retainer which is mechanically and operably connected to said clip member;
at least one second arcuate object-retainer which is supported solely by said first arcuate object-retainer;
each said arcuate object-retainer having two and only two arcuate arm members for removably holding said arcuate object therebetween;
said clip member and each said arcuate object-retainer being constructed, connected and arranged relative to each other so that each arcuate object may be inserted in and removed from each said arcuate object-retainer by linearly translating said arcuate object in a first direction which is substantially perpendicular to said major elongated longitudinal central axis of said major surface of said clip member and which is substantially parallel to said predetermined plane of said major surface of said clip member;
said arcuate arm members providing sole support for said arcuate objects in said arcuate object-retainer; and
each said arcuate object-retainer providing sole support for the arcuate object which is removably held therein.

4,062,483
WINDOW SHADE HANGING DEVICE
Paul J. Brigante, 72 Park Ave., Whiteplains, N.Y. 10603
Filed Apr. 9, 1976, Ser. No. 675,334
Int. Cl.² B25C *7/00*
U.S. Cl. 227—147 **3 Claims**

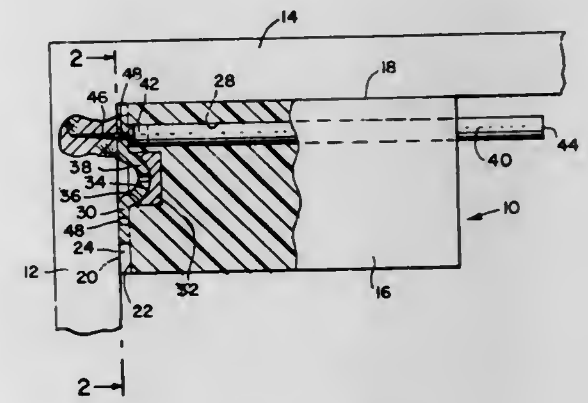

1. Window shade bracket securing apparatus comprising in combination:
a guide block having at least one longitudinally extending surface thereon;
at least one end of said guide block being normal to said longitudinally extending surface and formed of a nonmagnetic material;
a vertical recess in said one end of the guide block and extending the complete length thereof so as to be open at the top and bottom, the width of said recess being defined by a pair of opposed parallel walls, said recess having a countersunk portion intermediate the open ends thereof contoured to receive therein the arcuate protruding portion of a shade support bracket;
a longitudinally extending through bore in said block spaced inwardly of said one longitudinally extending surface;
a permanent magnet mounted in the guide block having at least a face thereof exposed within the confines of said countersunk portion;
and an elongated rod member dimensioned to fit slidably within said bore in said guide block and of sufficient length to extend beyond the other end thereof, a permanent magnet being mounted at one end of said rod member.

4,062,484
ABRASION RESISTANT FILAMENT WEAR GUIDES AND METHOD OF MAKING SAME
John J. Rausch, Antioch, and Ray J. Van Thyne, Oak Lawn, both of Ill., assignors to Surface Technology Corporation, Oak Lawn, Ill.
Continuation-in-part of Ser. No. 388,809, Aug. 16, 1973, abandoned. This application Aug. 13, 1975, Ser. No. 604,172
Int. Cl.² B65H *23/04*
U.S. Cl. 226—196 **3 Claims**

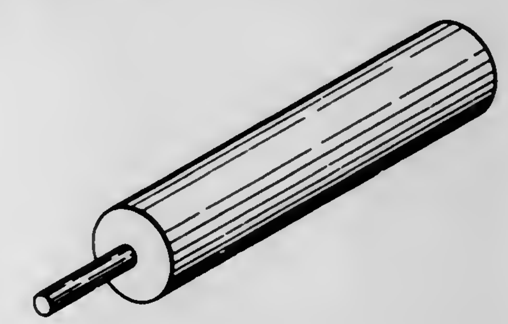

1. A filament wear guide consisting essentially of:
a. a substrate member in the form of the wear guide;
b. a continuous, integral chromium interlayer on said sub-

strate member at least in the area thereof to be contacted by a filament passing thereover;

c. a surface supported on said chromium interlayer consisting of non-particulate, continuous thermally formed chromium nitride, said surface confirming to the shape of the surface of said chromium interlayer; and

d. wherein the combined thickness of said chromium interlayer and said chromium nitride surface is at least 5 microinches.

4,062,485
EXOTHERMIC WELDING DEVICE
Leonard M. Andersen, 46 Alexander Ave., Yonkers, N.Y. 10704
Filed Jan. 6, 1977, Ser. No. 757,303
Int. Cl.² B23K *23/00;* B63C *7/16*
U.S. Cl. 228—56 **15 Claims**

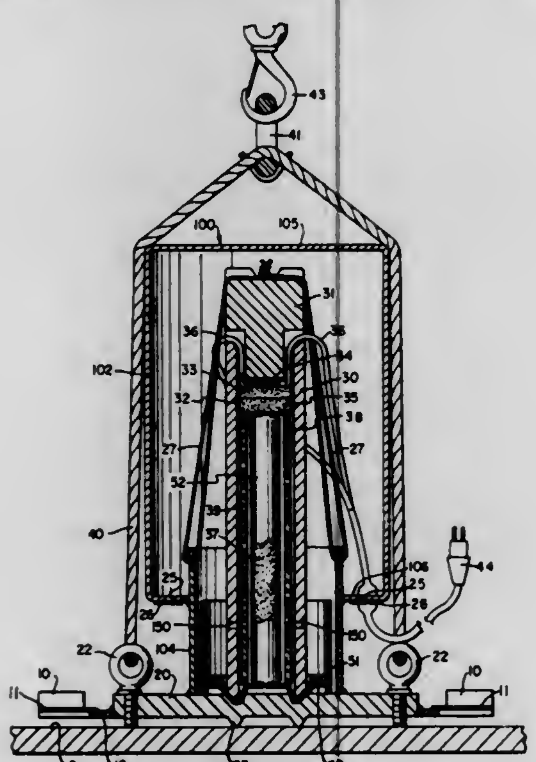

1. Apparatus for exothermic welding to a surface comprising:

a plate adapted to be positioned substantially parallel to and contiguous with said surface;

a casing disposed proximate said plate;

a exothermic mixture disposed within said casing;

igniting means, mounted proximate said mixture, for igniting said exothermic mixture; and

urging means for urging said casing through said plate and into said surface after said exothermic mixture begins to react.

4,062,486
CARTON
Calvin C. Goodrich, Wyoming, Ohio, assignor to The Procter & Gamble Company, Cincinnati, Ohio
Filed Nov. 4, 1976, Ser. No. 738,926
Int. Cl.² B65D *5/54*
U.S. Cl. 206—626 **3 Claims**

1. A seal-end carton of rectangular cross-section comprising alternating side, front and back panels and provided with an easily opened end closure, said closure comprising an inner major flap articulated to the front panel, an outer major flap articulated to the back panel and dust flaps articulated to the side panels, the dust flaps being located intermediate the inner and outer major flaps, the front panel having a line of weakness therein defining a removable portion contiguous the line of articulation along which said inner major flap is attached, said line of weakness extending to opposite ends of said line of articulation, the dust flaps each having a line of weakness extending thereacross from one side to the other with the major portion thereof generally parallel to and spaced from the line of articulation of the dust flap, said line of weakness on each dust flap commencing at the adjacent end of said inner major flap line of articulation and extending obliquely, distally, therefrom, the end edges of said inner major flap being generally aligned with the lines of weakness in the dust flaps, an extension attached to the distal end of the outer major flap, said

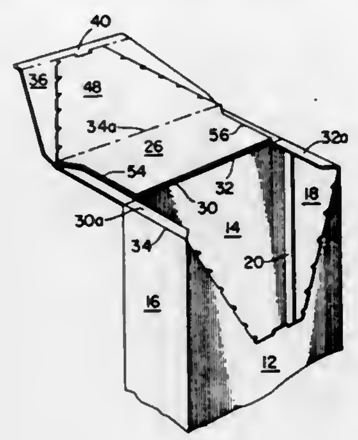

extension being adapted and sized to overlie the line of weakness defining said removable portion of said front panel, said extension being adhesively attached to said removable portion, the ends of said dust flaps distal of the lines of weakness being adhesively attached to the inner and outer major flaps.

4,062,487
CARTON CLOSURE
Robert A. Bliss, St. Paul, Minn., assignor to Hoerner Waldorf Corporation, St. Paul, Minn.
Filed Dec. 17, 1976, Ser. No. 751,846
Int. Cl.² B65D *5/46, 5/72, 5/10*
U.S. Cl. 229—52 B **4 Claims**

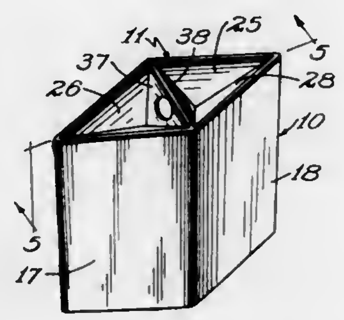

1. A carton blank for a four-sided carton having a recessed double thickness handle formed as a part of the top closure, said blank comprising:

four rectangular side wall panels of equal size positioned in lateral alignment and connected by vertical fold lines, said side panels defined along their top and bottom edges by horizontal fold lines;

bottom closure flaps connected along said bottom edge of said side wall panels;

a top closure for said blank connected along the top edge of said blank including a first triangular handle section, said triangular section being formed as an isosceles triangle having a base equal to the width of a first adjacent pair of said side wall panels and having a center fold line extending vertically from the apex of said triangle to the point of intersection of said top edge fold line and the vertical hinge line connecting said first pair of adjacent side wall panels, said first triangular handle section having a slot cut on each side of said vertical fold line and positioned along said diagonally positioned fold lines;

a pair of fold lines extending diagonally from the point of intersection of said top edge hinge line and said hinge line connecting said first pair of adjacent side wall panels and intersecting the outer edges of said first triangular handle section;

a second triangular handle section substantially similar in size and configuration to said first triangular handle section connected along the top edge of the remaining two adjacent side wall panels;

a pair of insertable tabs formed as a part of and extending vertically from said second triangular handle section adjacent the apex of said second section, said tabs formed in width substantially equal to or slightly less than the length of said slots; and

wherein die cut apertures are formed in that portion of each of said triangular handle sections on either side of each vertical fold line and above each of said diagonally positioned fold lines.

4,062,488
MECHANISMS FOR PRODUCING PRECISELY-TIMED INTERMITTENT OPERATIONS
Yousei Kawabata, Suwa, Japan, assignor to Kabushiki Kaisha Suwa Seikosha, Tokyo, Japan
Filed Aug. 11, 1976, Ser. No. 713,737
Claims priority, application Japan, Aug. 11, 1976, 50-97385
Int. Cl.² G06K *1/10*
U.S. Cl. 234—115 **10 Claims**

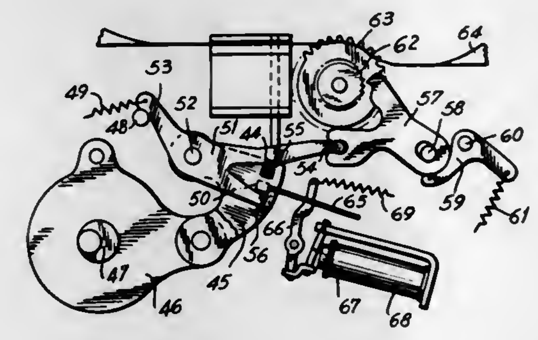

1. In a machine for performing on a sheet material such as tapes, cards, or the like, a plurality of operations which include as one operation at least intermittently feeding the sheet material in at least one direction, so that the sheet material undergoes feeding intervals during which the sheet material moves and dwell intervals which alternate with said feeding intervals and during which the sheet material remains stationary, and another operation working on the sheet material with a reciprocating tool such as a punch during dwell intervals of said feeding operation when said sheet remains stationary, so as to achieve a product such as punched tape or a punched card, a plurality of mechanisms for respectively performing said operations, each of said mechanisms comprising an oscillating drive means for providing an oscillating driving movement having continuously repeating oscillating cycles all of which are identical so that said operations of working on the sheet material and intermittent feeding intervals during which said sheet material moves are completed during the same oscillating cycle, said oscillating drive means including an output member which oscillates along a predetermined path back and forth between opposed dead center positions during each oscillating cycle of said oscillating drive means, driven means for performing one of said operations on said sheet material in response to being displaced from a rest position to an operating postion, motion-transmitting means for transmitting motion from said oscillating drive means to said driven means, said motion-transmitting means having an operating position situated in said path of movement of said output member to be moved thereby along a predetermined motion-transmitting path, and said driven means having an input portion situated at said motion-transmitting path to be engaged by said motion-transmitting means and moved thereby for operating said driven means from a rest position to an operating position to perform one of said operations on the sheet material, said motion-transmitting means also having a retracted rest position situated beyond said predetermined path of said output member so that when said motion-transmitting means is in said retracted rest position thereof said driven means is not operated and remains in a rest position while said oscillating drive means continues to operate, control means operatively connected with said motion-transmitting means for displacing the latter between said operating and rest positions thereof for controlling when a drive is transmitted from said oscillating drive means through said motion-transmitting means to said driven means, said oscillating drive means including resetting means for engaging said driven lever during each oscillating cycle that said driven means performs an operation on the sheet material, to thereby return said driven means to said rest position during said oscillating cycle that said driven means performs said operation on the sheet material.

4,062,489
SOLAR-GEOTHERMAL HEAT SYSTEM
Roland A. Henderson, Rte. 6, Box 201, Chippewa Falls, Wis. 54729
Filed Apr. 21, 1976, Ser. No. 678,765
Int. Cl.² F24D *0/00*
U.S. Cl. 237—1 A **3 Claims**

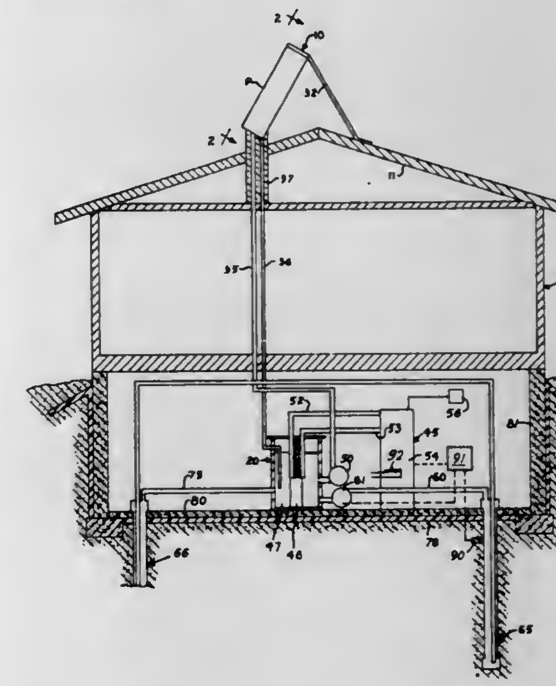

1. For a building having a heat circulation system, heat transfer apparatus comprising a tank, a heat pump for being connected in heat exchange relationship with the heat circulation system, said heat pump having a furnace unit exterior of the tank for transferring heat to the heat circulation system and an evaporator-condensor unit mounted in the tank in heat exchange relationship with the fluid in the tank, the condensor unit having a heat transfer coil in the tank, a vertically elongated ground heat exchanger for having fluid circulated therethrough, fluid conducting means including a pump for conducting fluid between the ground heat exchanger and the tank and opening to the tank, a solar heat collector for having fluid circulated therethrough, said collector having a fluid inlet and a fluid outlet, first conduit means for conducting fluid between said tank and collector inlet, second conduit means for conducting fluid between said tank and collector outlet, each of the conduit means opening to the tank and means connected in one of said conduit means for pumping fluid therethrough, and a partition in the tank that in cooperation with the condensor unit divides the tank into a first fluid chamber and a second fluid chamber, said condensor unit providing a fluid flow path between said chambers and having said coil extending into said flow path, the first conduit means opening to the first chamber, the second conduit means opening to the second chamber, and the fluid conducting means for conducting fluid between the ground heat exchanger and the tank including conduit means for conducting fluid between the ground heat exchanger and the first chamber, conduit means for conducting fluid between the ground heat exchanger and the second chamber and pump means in one of the two last mentioned conduit means for pumping fluid therethrough.

4,062,490
RAIL FASTENING CLIPS
Richard M. Hixson, McLean, Va., assignor to Transit Products Company, Inc., Washington, D.C.
Filed May 21, 1976, Ser. No. 666,037
Int. Cl.² E01B *9/46*
U.S. Cl. 238—338 **5 Claims**

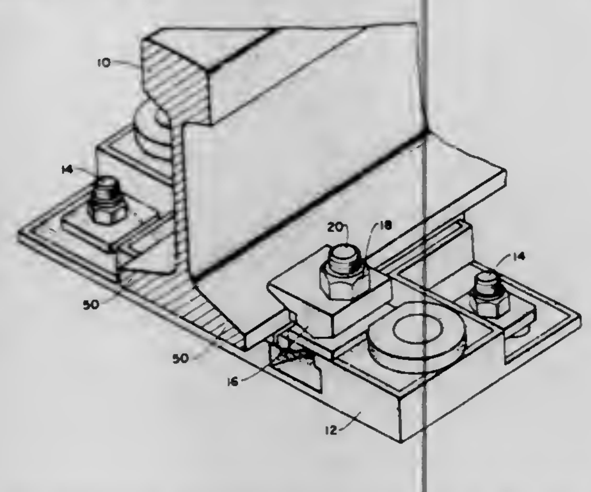

1. A rail fastening assembly for mounting a rail on a supporting bed comprising:
a base assembly;
fastener means including at least one stud extending through said base assembly for holding said base assembly securely to said supporting bed;
a least one rail clip supported on said base assembly, said clip having a heel portion and a toe portion; and
torque producing means on the heel portion of said clip for, in use when clamping a rail, generating a torque on said toe portion, said base assembly including an upper plate presenting a flat surface and said torque producing means comprising a fulcrum-forming knife edge, located intermediate the ends of said heel portion of said clip on the underside of said heel portion and extending across the width of said heel portion, which engages said flat surface of said upper plate, said fastening assembly further including bolt means for bolting said clip to said base assembly, so that said toe securely engages the rail while permitting a degree of longitudinal movement of the rail, said bolt means including a bolt which extends vertically through said clip and through the knife edge thereof.

4,062,491
AUTOMATIC PLANT WATERING ARRANGEMENT
Bernhard von Skwarski, Bulgenbachweg 3, 1000 Berlin 28, Germany
Filed June 23, 1976, Ser. No. 698,905
Claims priority, application Germany, July 17, 1975, 2532315
Int. Cl.² A01G *25/02*
U.S. Cl. 239—66 **18 Claims**

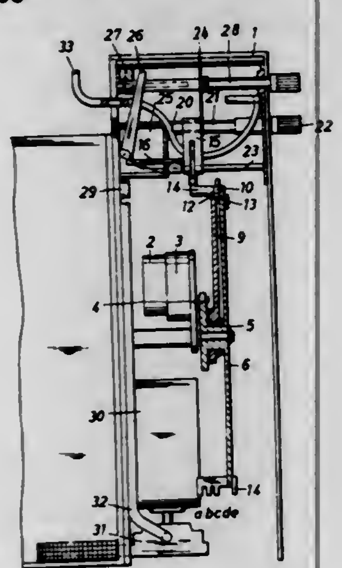

1. An automatic plant watering arrangement comprising, in combination: water intake means; a plurality of water outflows; valves connected to said water outflows; timer means; time-controlled means connected to said timer means for actuating said valves, means for adjusting said valves individually for different opening cycles; said time-controlled means comprising a synchronous motor with gear reduction means, a single-tooth wheel and mating gear, and valve actuation disk means connected to said gear; said valves comprising water hoses and clamping means for closing and opening said hoses; said clamping means comprising a clamping lever for opening and closing said valves; and pawl means actuated by said clamping lever; water pump and motor means; switch means for controlling the operation of said pump and motor means, said pawl means actuating said switch means; worm-gear spindle means actuated by said pawl means, said pawl means after actuating said worm-gear spindle means tilting said clamping lever for opening all valves.

4,062,492
LIQUID-APPLICATOR NOZZLES
Leonard Thornton, London, England, assignor to Molins Limited, London, England
Filed Apr. 6, 1976, Ser. No. 674,207
Claims priority, application United Kingdom, Apr. 10, 1975, 14691/75
Int. Cl.² B05B *1/14*
U.S. Cl. 239—125 **12 Claims**

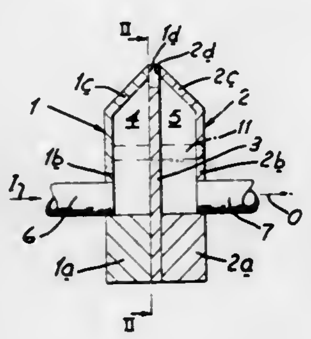

1. A nozzle for use in applying adhesive or other liquid to a surface, comprising a box-like member having an orifice in the form of a straight slot formed in one face thereof, and a partition fixedly mounted inside said member to form first and second compartments therein, one edge of said partition being directly opposite said orifice, said one edge having at least one projecting portion extending into and closing a corresponding portion of said slot, and at least two other portions each spaced from the inner end of said slot so as to form a weir over which liquid may flow from said first to said second compartment, said projecting portion of said one edge of said partition being narrower than said other portions of said one edge.

4,062,493
HOME FIRE EXTINGUISHING SYSTEM
Laurine Scylester Suggs, Box 2046, Anniston, Ala. 36201
Filed June 14, 1976, Ser. No. 695,443
Int. Cl.² B65H *75/00*
U.S. Cl. 239—197 **6 Claims**

1. A fire extinguishing system comprising: a rotary connector having a fixed end and a rotary end of defining a water passage passing axially out of said rotary end; a bearing; a hose reel rotatably mounted between said rotary end of said rotary connector and said bearing, said reel comprising an axle extending between said rotary connector and said bearing, a pair of sidewalls positioned on said axle, said sidewalls defining apertures through which said axle passes, and means to maintain said sidewalls in spaced parallel relationship on said axle perpendicular thereto; said axle resting directly upon said sidewalls at said apertures and being unattached to said sidewalls and said means to maintain said sidewalls in spaced parallel relationship; said axle comprising a waterflow connector

positioned between said sidewalls and a pipe section extending between said waterflow connector and said rotary connector through one of said sidewalls, said waterflow connector having a radially extending leg, said means to maintain said sidewalls in spaced parallel relation on said axle comprising a pair of rigid linear members extending between and fixed to said sidewalls and positioned adjacent to said axle and adjacent to and on opposite sides of said radially extending leg of said

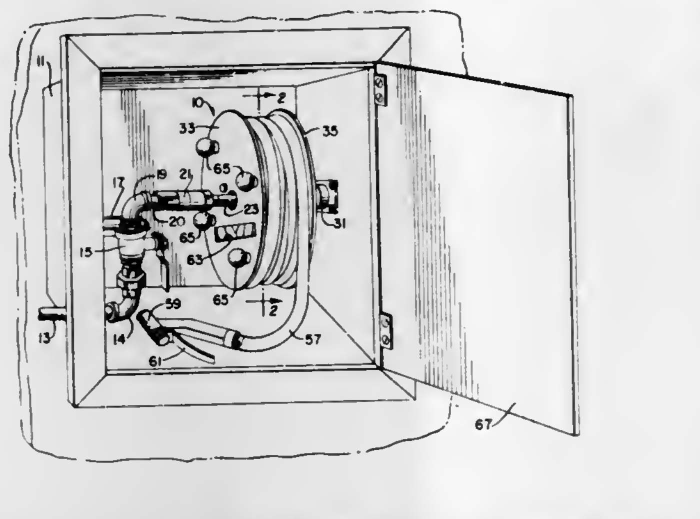

waterflow connector, said side wall being rotatable relative to said axle except as constrained by said rigid linear member a hose; a hose connected to said radially extending leg and wound upon said reel between said sidewalls; said axle defining a water passageway between said rotary connector and said hose; and means to supply water under pressure through said rotary connector, said pipe section, and said waterflow connector to said hose.

4,062,494
SPRINKLER HEAD SEALING APPARATUS
Mark Healy, Orlando, Fla., assignor to Senninger Irrigation, Inc., Orlando, Fla.
Filed June 18, 1976, Ser. No. 697,319
Int. Cl.² B05B *3/02*
U.S. Cl. 239—230 **9 Claims**

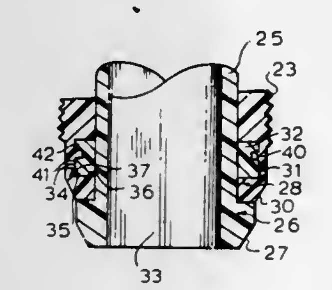

1. A rotatable sprinkler head apparatus comprising in combination:
a swivel made of one material and having attaching means for connection to a source of water under pressure, said swivel having a bore therethrough;
spindle means movably mounted through said bore of said swivel and connected at one end to said sprinkler head apparatus, said spindle means having a flange at the opposite end thereof and further having a bore between its ends;
wear washer means made of a second material and formed into one end portion of said swivel and forming a coupling ridge formed on said swivel; and
seal means located on said spindle means between said wear washer means and said flange on said spindle means, said seal means having a lip extending about the edge portion thereof with an interior annular tapered surface overlapping said wear washer coupling ridge formed by said wear washer in said swivel, and said seal means having an external tapered surface, whereby said wear washer means and overlapping seal means prevent the entry of sand or other contaminates.

4,062,495
GAS SUPPLY DEVICE FOR FLAME SCARFING
Ewald Luck, Bonefeld, Germany, assignor to GeGa Gesellschaft fur Gasetechnik Lotz KG, Germany
Filed Feb. 27, 1976, Ser. No. 662,102
Claims priority, application Germany, Feb. 28, 1975, 2508681
Int. Cl.² B05B *1/14*
U.S. Cl. 239—559 **8 Claims**

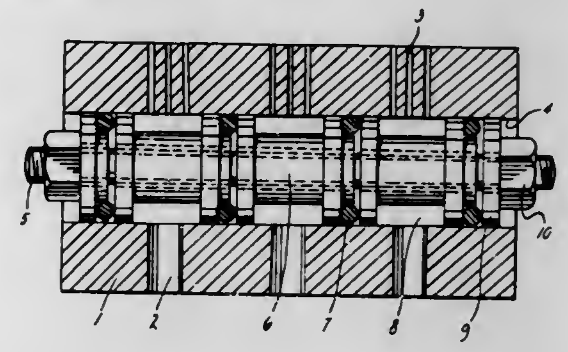

1. A gas supply device comprising a housing having a first bore therethrough and a plurality of spaced inlet and exit bores intersecting said first bore, an elongated member axially slidably disposed in said first bore, said elongated member further comprising at least two sleeves and an elongated rod member disposed axially through a portion of at least two sleeves, a plurality of compressible seal members disposed around said rod member and between said sleeves, said seal members loosely engaging the surface forming said first bore and being positioned to separate at least one of said inlet bores from other inlet bores and to separate at least one of said exit bores from other exit bores, and means accessible from the exterior of said housing for threadably engaging said rod member whereby rotation of said meand draws said sleeves axially toward each other to thereby selectively compress said seal members radially outwardly into fluid-tight engagement with the surface defining said first bore.

4,062,496
SPREADER FOR PARTICULATE MATERIAL
Conrad Melton, 201 Sloan Drive, Waynesville, N.C. 28786
Filed Oct. 21, 1976, Ser. No. 734,657
Int. Cl.² A01C *17/00*
U.S. Cl. 239—683 **16 Claims**

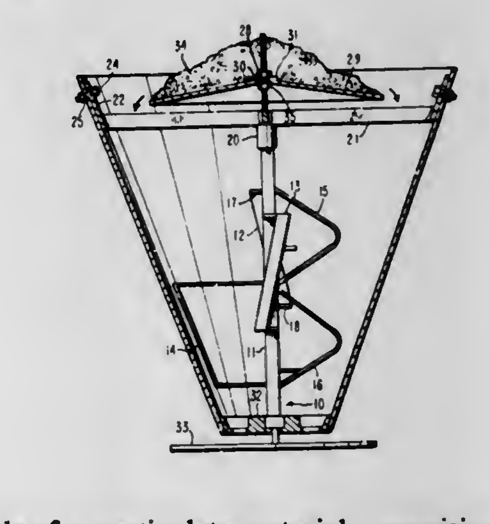

1. A spreader for particulate material comprising a vertical rotatable shaft, a device mounted on said shaft for supporting said material, and a hopper surrounding said shaft and said material supporting device, said device being free floating on said shaft and dispensing quantities of said material into said hopper and including means for dispensing said material at a controlled rate.

4,062,497

GRINDING MILL SYSTEM HAVING PROPORTIONING FEEDER

Dennis E. Kemp, Jr., Maplewood, and Walter Olden Wright, Plainsboro, both of N.J., assignors to Application Dynamics, Inc., South Orange, N.J.

Filed July 1, 1976, Ser. No. 701,595

Int. Cl.^{2} B02C *23/12*

U.S. Cl. 241—34 **6 Claims**

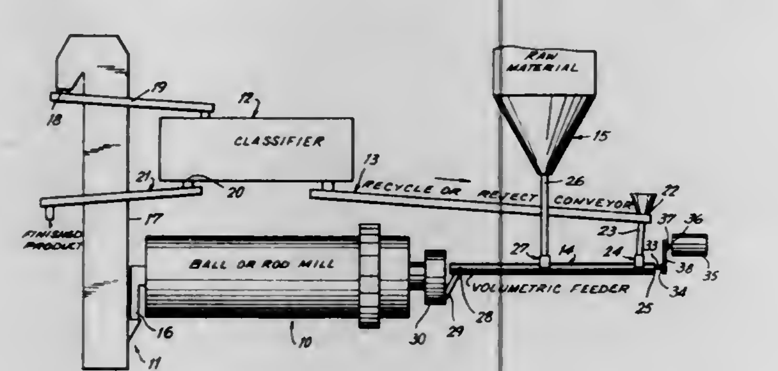

1. In a grinding mill system for sand or the like, said system including a mill, classifying means for receiving ground materials from the mill and separating over-sized particles from finished product, first conveyor means for receiving said oversize ground material, a feed device including a feed channel, said channel including an entry end and a discharge end connected to said mill, second conveyor means movably mounted in said channel for advancing material to said discharge end, said second conveyor means including transverse separator portions extending into proximate spaced relation with the inner walls of said channel and dividing said channel into a series of longitudinally extending segments, a first receiver station in said channel adjacent said entry end and connected to said first conveyor means for receiving and introducing into said channel said partially ground materials from said first conveyor, a second receiver station interposed between said discharge end and said first receiver station, and gravity feed means at said second receiver station for introducing said raw material into the area beneath said second station and bounded by the surface of the material introduced at said first receiver station and said separator portions of said second conveyor at a rate to substantially fill said conveyor in said area beneath said second receiver station, whereby the quantity of said raw material introduced at said second station automatically varies as a function of the level of the material beneath said second station which was introduced at said first station.

4,062,498

MOBILE WOOD CHIPPER UNIT

Pertti Leo Juhani Szepaniak, Tolosenmaki, 82500 Kitee, Finland

Filed Nov. 13, 1975, Ser. No. 631,569

Claims priority, application Finland, Nov. 15, 1974, 743318

Int. Cl.^{2} B02C *23/00*

U.S. Cl. 241—101.7 **6 Claims**

1. A mobile wood chipper unit comprising:

a chipper with feeding means;

a lifting means for transferring trees into the feeding means of the chipper;

a tippable chip container;

a chip transfer pipe connecting the chipper to the chip container; and

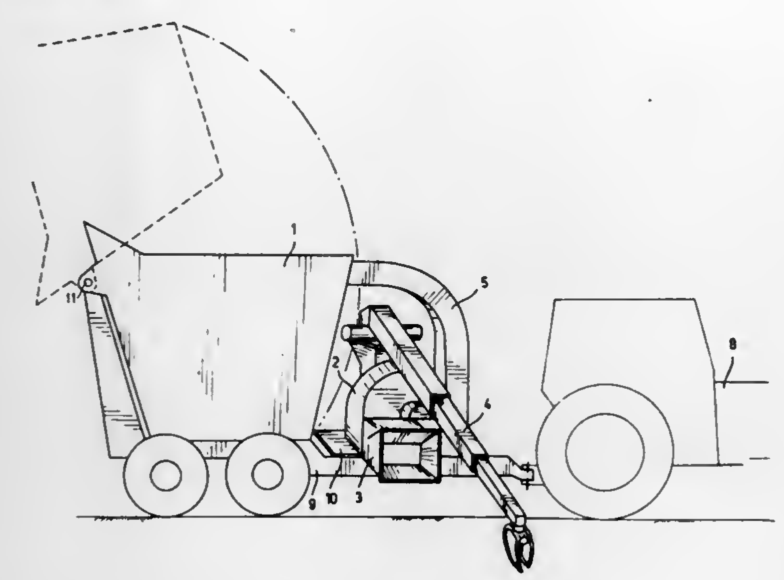

net-like means covering the chip container to prevent chips from being hurled out of the container.

4,062,499

ELECTRICAL GRINDING MACHINE FOR COFFEE BEANS

Husazo Maejima, Tokyo, Japan, assignor to Philmac Denki Kabushiki Kaisha, Tokyo, Japan

Filed Oct. 19, 1976, Ser. No. 733,943

Claims priority, application Japan, Oct. 23, 1975, 50-143636[U]

Int. Cl.^{2} B02C *7/14*

U.S. Cl. 241—259 **3 Claims**

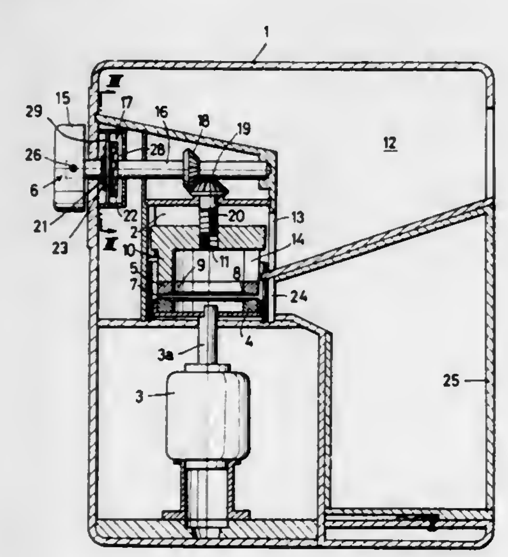

1. A grinding machine for coffee beans comprising a casing, a grinding chamber in said casing, a rotary mill body in said grinding chamber, an electric motor disposed in said casing and coupled to said rotary mill body for driving said rotary body in rotation, a non-rotatable mill body in said grinding chamber opposed to said rotary mill body, said mill bodies including ridges thereon facing one another, said non-rotatable body being supported for longitudinal displacement in said casing, said mill bodies being annular and defining an interior chamber, one of said bodies having an inlet opening for admission of coffee beans to be ground into said interior chamber, a supply chamber in said casing for coffee beans, means establishing communication between said supply chamber and said interior chamber, means for displacing said non-rotatable mill body for advancement and retraction with respect to said rotary mill body to adjust the spacing therebetween, an adjustment member including a rotatable knob external of said casing coupled to said means for displacing the non-rotatable mill body to adjust the position of said non-rotatable mill body with respect to said rotary mill body, and a receiving container removably coupled to said casing and having an inlet facing an outlet provided in said grinding chamber to receive ground coffee from said mill bodies, said means for displacing said non-rotatable mill body comprising a rotatable threaded member threadably engaged with said non-rotatable mill body, an operation shaft coupled to said knob, gear means coupling said threaded member and said operation shaft, and restraining means acting on said adjustment member for establishing index positions therefore for holding the non-rotatable mill body in adjusted spaced position relative to the rotary mill body, said threaded member and operation shaft extending perpendicularly to one another, said gear means comprising bevel gears respectively on said operation member and said threaded member and in mesh with one another.

4,062,500

COMMINUTION DEVICE

Russell I. Peterson, Jr., Bay City, Mich., assignor to Conair, Inc., Franklin, Pa.

Filed Mar. 16, 1976, Ser. No. 667,301

Int. Cl.^{2} B02C *18/16*

U.S. Cl. 241—285 R **7 Claims**

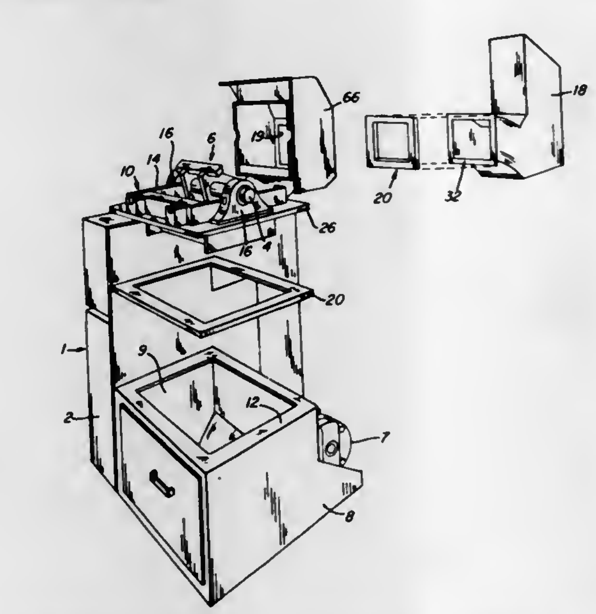

1. A comminution device comprising: a housing; a comminution structure having a stationary portion and a rotating cutter supported by said stationary portion inwardly of the outer periphery of said stationary portion; said stationary portion being supported by said housing to extend horizontally with one side of said outer periphery continuously overlying a continuous support portion of said housing; continuous vibration isolating means carried by said one side of said outer periphery, independent continuous vibration isolating means carried by said support portion; and said isolating means being in continuous overlying relationship and in engagement with each other.

4,062,501

METHOD AND APPARATUS FOR PACKAGING LINEAR MATERIAL

Arnold J. Eisenberg; Jerome P. Klink, both of Granville; Alex P. Symborski, and Gerald L. White, both of Newark, all of Ohio, assignors to Owens-Corning Fiberglas Corporation, Toledo, Ohio

Continuation of Ser. No. 590,738, June 26, 1975, abandoned. This application Oct. 14, 1976, Ser. No. 732,273

Int. Cl.^{2} B65H *54/00, 67/04*

U.S. Cl. 242—18 G **27 Claims**

1. Apparatus for simultaneously winding a supplied first linear element and a supplied second linear element into separate packages comprising:

a. a first rotatable collet having a package collection region and a temporary collection region, the first collet including a fixed member located in the temporary collection region effective to engage the first element linearly advanced through the region;

b. a second rotatable collet having a package collection region and a temporary collection region, the second collet including a fixed member located in the temporary collection region effective to engage the second element linearly advanced through the region, the collets being in spaced apart, side by side, parallel relationship below the element supply means;

c. a single interim means for simultaneously advancing both linear elements during times the elements are not collected on the collets, the single interim means being located in spaced relation which the collets effective to simultaneously advance both the linear elements along individual

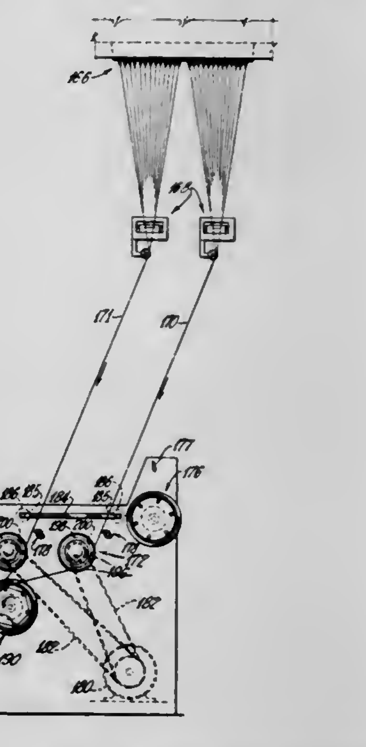

paths that advance each of them over its respective collet in the temporary collection region so that the fixed member in its respective temporary collection region can engage the linear element during rotation of its collet by a collet rotating means to begin collection of each linear element on its respective collet and to effect severance of each linear element between its respective collet and the interim means; and

d. means for moving the elements from collection in their respective temporary collection regions to their respective package collection regions for package formation.

4,062,502

WIRE TENSION CONTROL APPARATUS ESPECIALLY FOR COIL WINDING MACHINES

Kenneth E. Peck, Jr., Springfield, Ohio, assignor to The Globe Tool and Engineering Company, Dayton, Ohio

Filed Oct. 21, 1976, Ser. No. 734,534

Int. Cl.^{2} H01B *13/00;* H01F *11/04*

U.S. Cl. 242—7.03 **11 Claims**

1. For use in a coil winding machine having powered winding means that draws wire from a wire supply at an uneven rate, the apparatus comprising:

a. powered means operating in synchronism with said winding means for taking up slack in the wire drawn from the supply and engaging the wire between said wire supply and said winding means;

b. a wire tensioning device engaging the wire exiting from said wire supply; and

c. a wire tension responsive takeup device comprising a movable wire guide engaging the wire between said wire tensioning device and said powered means, means for

guiding and confining said wire guide for movement along a substantially linear path, and means for yieldably resist-

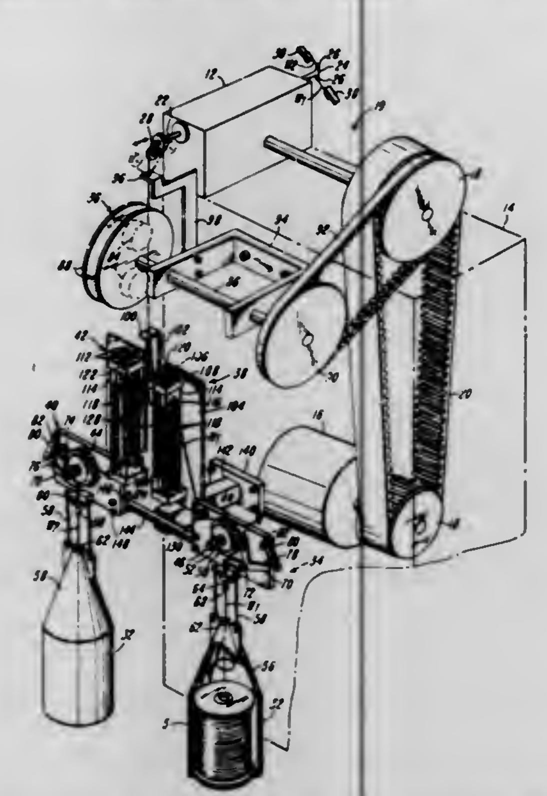

ing movement of said wire in one direction along said path.

4,062,503
LEVEL WINDING APPARATUS
Henry D. Chaplin, Jr., and Stuart E. Wadsworth, both of Cortland, N.Y., assignors to Haskell Electronics & Tool Corporation, Homer, N.Y.
Filed Aug. 30, 1976, Ser. No. 718,942
Int. Cl.² B65H *54/20, 54/28*
U.S. Cl. 242—35.5 R **12 Claims**

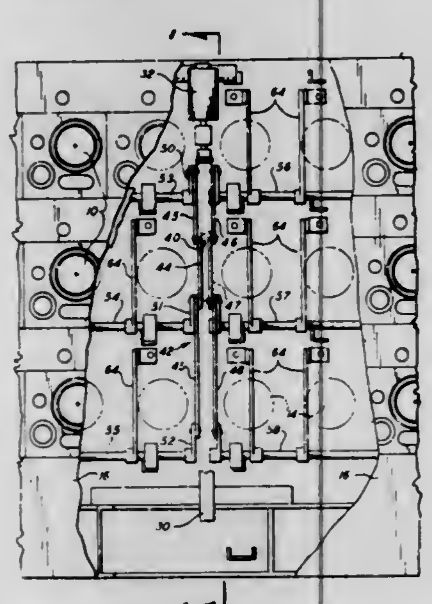

1. Apparatus for simultaneously controlling the level winding of a plurality of continuous filaments on separate spools, said apparatus comprising, in combination:
- a. a plurality of spindles having parallel, horizontally disposed axes, each adapted to support a spool for winding a continuous filament thereon;
- b. drive means for imparting rotation to each of said spindles;
- c. a plurality of shafts mounted for reciprocal axial movement, one of said shafts being mounted laterally adjacent and parallel to each of said spindles;
- d. a thread guide carried on each of said shafts and having a peripheral groove perpendicular to said axes;
- e. a single, elongated, rotatably mounted, threaded member;
- f. a traveling member engaged with said threaded member for reciprocating linear movement in response to rotation of said threaded member;
- g. a motor for imparting rotation to said threaded member;
- h. linkage means connecting said traveling member to each of said shafts to transfer said reciprocating linear movement from said traveling member simultaneously to each of said shafts for effecting said reciprocal axial movement of said shafts;
- i. said plurality of shafts including at least one pair of shafts extending in coaxial alignment with one another, each of said pair being arranged laterally adjacent separate ones of said spindles;
- j. means mounting said pair of shafts for relative axial adjustment; and
- k. means for releasably fixing the relative axial positions of said pair of shafts.

4,062,504
APPARATUS FOR CONTINUOUSLY ACCUMULATING A TRAVELLING METAL STRIP OR WIRE-LIKE MATERIAL
Yoshio Kitazawa, Kitakyushu, Japan, assignor to Nippon Steel Corporation, Tokyo, Japan
Filed May 4, 1976, Ser. No. 683,219
Claims priority, application Japan, May 8, 1975, 50-55255
Int. Cl.² B65H *75/02;* **B21C** *47/00*
U.S. Cl. 242—55 **4 Claims**

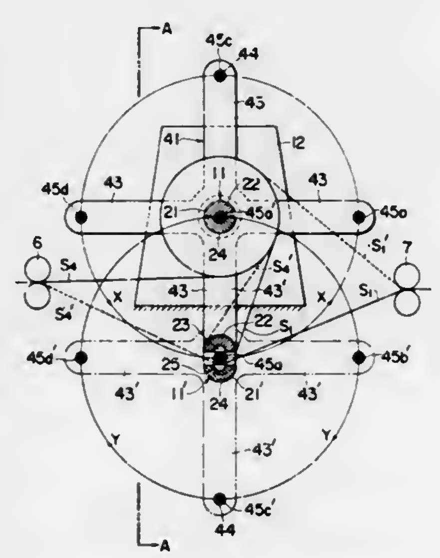

1. An apparatus for continuously accumulating a travelling metal strip or wire-like material in an accumulating space provided within a continuous annealing line, diffusion coating line or the like for performing a winding or rewinding operation for a time corresponding to a treating time, said apparatus comprising:

material feeding and withdrawal guide roller means spaced apart along a path of the material;

a pair of frame members laterally spaced from each other on opposite sides of the path of the material between said guide roller means and spaced from the path of the material transversely of the lateral spacing between the frame members;

a pair of winding reel means each having the same structure and mounted on the respective frame members and projecting toward each other and positioned on transversely opposite sides of said path respectively, said winding reel means each having a rotary shaft rotatably mounted on the corresponding frame member and at least one arm extending radially of said rotary shaft and rotatably mounted on the corresponding frame member for relative rotation around said rotary shaft, said arm having a folding back roll at the outer end thereof, said folding back roll being freely rotatably mounted on said arm and being parallel with the axis of said shaft, the locus of the axes of the folding back roll on one reel means intersecting the axis of the rotary shaft on the other reel means, each said rotary shaft having roll receiving means for receiving a folding back roll on the other reel means with the material therearound;

rotary shaft driving means coupled to said rotary shafts for driving said shafts at least in the winding direction; and arm driving means coupled to said arms for driving said arms stepwise for moving a folding back roll into said roll receiving means.

4,062,505
SNAP-ON, WIRE PAY-OFF CAP ASSEMBLY
Joseph J. Kovaleski, Easton, Conn., assignor to Wyrepak Industries, Bridgeport, Conn.
Filed Oct. 1, 1976, Ser. No. 728,650
Int. Cl.² B65H *49/00*
U.S. Cl. 242—128 **10 Claims**

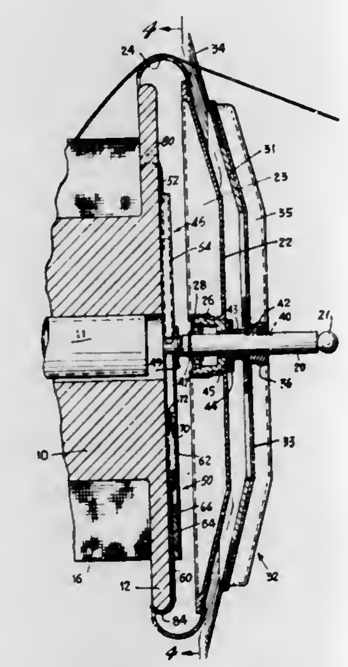

1. A snap-on wire pay-off cap assembly for use with wire-filled, flanged spools to control the unreeling of wire past the ends thereof, comprising in combination:
- a. a wheel having a rim adapted for engagement with the wire being unreeled,
- b. a circular brush disposed broadside to the wheel, having tines extending past the wheel periphery,
- c. a support member mounting said wheel and fixedly mounting said brush in their respective operative positions, and
- d. clamping means connecting with said support member and engageable with the rim of one flange of the spool for releasably securing the member, wheel and brush at one end of the spool with the wheel broadside to the spool flange.

4,062,506
TAPE CASSETTE WITH FEATURES FOR PREVENTING THE TAPE FROM MOVING UP OR DOWNWARDLY RELATIVE TO THE CASSETTE
Tetsuo Machida, Tagajyo, Japan, assignor to Sony Corporation, Tokyo, Japan
Filed July 1, 1976, Ser. No. 701,678
Claims priority, application Japan, July 23, 1975, 50-102221[U]
Int. Cl.² G03B *1/04;* **G11B** *15/32, 23/04*
U.S. Cl. 242—199 **5 Claims**

2. A tape cassette formed of molded plastic and having a pair of mating lower and upper cassette members and including a pair of tape reels rotatably mounted in said cassette with magnetic tape extending between said reels and having a portion available for recording and playback functions along a front sidewall of said cassette which has an open area, comprising a plurality of tape guides formed on said lower and upper cassette members and extending generally parallel to said front face of said cassette and providing guides for said tape at said front face and a first portion of said tape guides attached to said upper cassette member and a second portion of said tape guides attached to said lower cassette member and said first and sec-

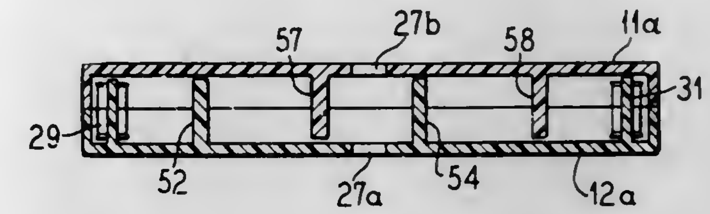

ond portions interleaved between each other such that said tape engages alternately guides from said first and second portions, and said first and second portions maintaining said tape centered between said lower and upper cassette members.

4,062,507
SLOPE LANDING COMPENSATOR SYSTEM
Donald W. Felder, 1153A Drennan Park, Fort Campbell, Ky. 42223
Filed Feb. 3, 1977, Ser. No. 765,196
Int. Cl.² B64C *25/22, 25/58*
U.S. Cl. 244—17.17 **1 Claim**

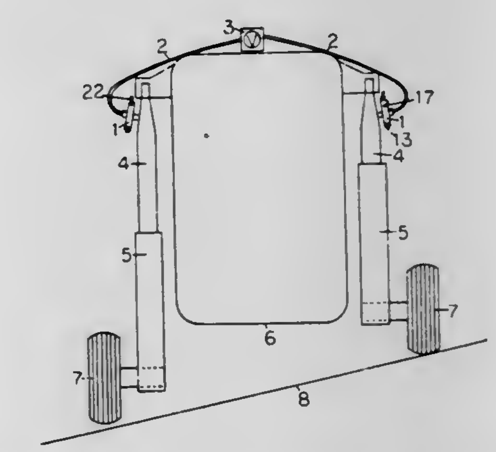

1. A slope landing compensator system for allowing helicopters to land on an inclined surface while maintaining the airframe of the helicopter in a more upright attitude comprising: a main landing gear strut on each side of said airframe; each of said struts containing a fluid and pneumatic shock absorbing system including a piston and fluid and air; one of said pistons being compressed to a greater extent than the other of said pistons when said helicopter has landed on said inclined surface; said strut with said piston compressed to a greater extent forming an up slope strut and said other strut forming a down slope strut; said fluid and air in said up slope strut having a higher internal pressure than the fluid and air in said down slope strut; valve means for transferring the air from said up slope strut to said down slope strut so that said down slope strut may be extended more than said up slope strut; said valve means including a pressure responsive valve associated with a service valve receptacle on each of said struts and a pilot operated valve connecting said pressure responsive valves; each said pressure responsive valve including a valve housing, a movable working member in said housing for movement in one direction by air pressure in an amount and at a rate proportional to said air pressure to a closed position, and for movement in an opposite direction to an open position, biassing means for continuously biassing said working member in said opposite direction, means defining a valve inlet passageway, means defining a valve outlet passageway, means defining a communicating passageway between said inlet and outlet passageway means when said working member is in said open position, said working member forming a second passageway for continuous communication between said inlet passageway means and the top of the working member and a service valve receptacle in the upper portion of the valve housing, said working member having a valve position indicator pin extend-

ing from its bottom surface and being of sufficient length to extend through a bore in a biassing adjustment plug in said housing when the working member is in said closed position, said bore providing sufficient clearance between the pin and the walls of the bore to permit air to pass therethrough, guide means for said working member comprising a guide pin in said housing and a slot in said working member for providing up and down stops and radial alignment means, sealing means around the lower portion of said working member and a dust seal located in said housing adjacent said adjustment plug; said inlet passageway means of each of said pressure responsive valves communicating with one of said strut service valve receptacles through a threaded connection; and said outlet passageway means of the pressure responsive valves directly communicating with each other through said pilot operated valve for permitting said air in said up slope strut to be transferred to said down slope strut in response to the higher air and fluid pressure in said up slope strut until sufficient pressure is created to activate the pressure responsive valve associated with said up slope strut to said closed position.

4,062,508

INTEGRATED HELICOPTER FLIGHT CONTROL

John A. Stephens, Aberdeen, and Ralph J. Kibler, Phoenix, both of Md., assignors to The United States of America as represented by the Secretary of the Army, Washington, D.C.

Filed Aug. 10, 1976, Ser. No. 713,167

Int. Cl.² B64C *27/56*

U.S. Cl. 244—83 F **8 Claims**

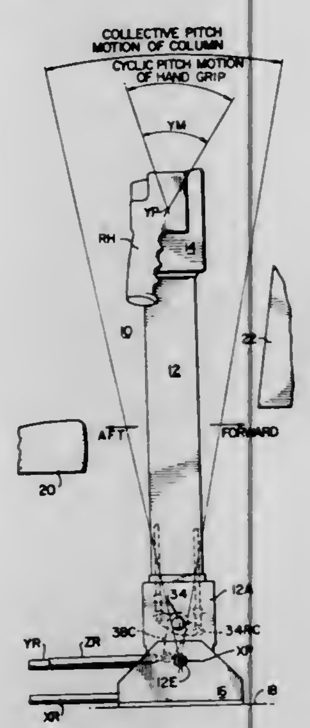

1. In a flight control means for helicopters, means generating cyclic and collective control function commmands for rotor control heads of the swash plate type, comprising:
- a main control column having pivot means at one end thereof mounting said column for rotation in a fore and aft plane to provide a collective pitch control means;
- a cyclic control head mounted at the other end of said control column comprising:
  - cyclic pitch control means mounted in said control head for rotation in a second plane parallel to said fore and aft plane; and
  - cyclic roll control means mounted on said control head for rotation in a third plane perpendicular to said fore and aft and second planes;
- common actuating means for said collective pitch, cyclic pitch and cyclic roll control means including first and second handgrips mounted on opposite sides of said cyclic control head and having common interconnections with said collective and cyclic control means to permit full actuation of said function command generating means with each of said handgrips;
- collective pitch, cyclic pitch and cyclic roll control output means extending from said control column for interconnection with the said rotor control head; and
- actuating means respectively interconnecting said control output means with said cyclic control head;
- wherein said cyclic control head includes first shaft means mounting said handgrips one on each end thereof for rotation in said second plane;
- pivot means mounting each of said handgrips on said ends of said first shaft means for rotation in said third plane;
- first bell crank and lever means driven by said first shaft means;
- a displaceable yoke means driven by said handgrips axially of said first shaft means in response to rotation of said handgrips in said third plane; and
- second bell crank and lever means driven by said yoke means; and
- wherein said control column includes crank means drivingly interconnecting the lowermost end of said control column, below said control column pivot means, with said collective pitch control output means;
- said first bell crank and lever means drivingly interconnecting said handgrips with said cyclic pitch control output means; and
- said second bell crank and lever means drivingly interconnecting said handgrips with said cyclic roll control output means.

4,062,509

CLOSED LOOP ROLL/YAW CONTROL SYSTEM FOR SATELLITES

Ludwig Muhlfelder, Livingston, and George Edwin Schmidt, Jr., Delran, both of N.J., assignors to RCA Corporation, New York, N.Y.

Filed Dec. 12, 1975, Ser. No. 640,147

Claims priority, application United Kingdom, July 21, 1975, 30390/75

Int. Cl.² B64G *1/10*

U.S. Cl. 244—166 **4 Claims**

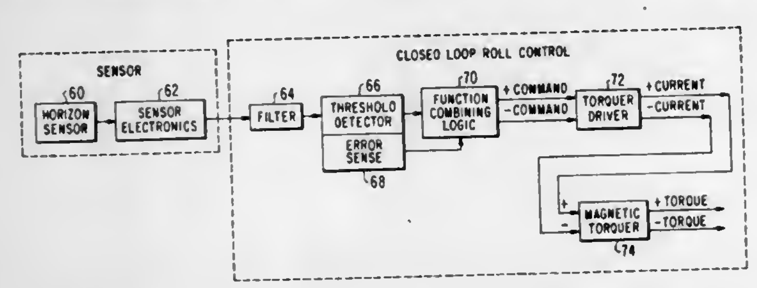

1. A closed loop magnetic torquing system for an orbiting pitch momentum biased satellite in a low inclination orbit for automatically controlling the roll error and yaw error of the satellite whereby the pitch axis is oriented to a desired attitude, said pitch axis being collinear with the momentum vector of the satellite, comprising:

a closed loop consisting essentially of:

a. roll error sensing means for generating an output signal representing a deviation of the pitch axis from said desired attitude,

b. magnetic torquing means oriented in said satellite to produce a magnetic dipole in the plane formed by said satellite's roll and yaw axes, said dipole being perpendicular to said satellite's pitch axis, and located in said plane at a predetermined azimuth angle relative to said roll axis,

c. means coupled to said sensor means for detecting when said sensor output signal exceeds a predetermined roll error threshold for generating an output signal when said threshold is exceeded and for maintaining said output signal until said sensor output signal changes sign; and

d. energizing means coupled to said detecting means and responsive/ to said detecting output signal for energizing said magnetic torquing means such that the magnetic field therefrom reacts with the magnetic field of the earth to produce a magnetic torque so that both the roll and yaw errors are attenuated to correct thereby the deviation of said pitch axis to change the orientation of said momentum vector without substantially changing the magnitude of said momentum vector.

4,062,510

NURSING BOTTLE HOLDER

Edward Brochu, 110 Robinson St., Lynn, Mass. 01905

Filed Aug. 3, 1976, Ser. No. 711,381

Int. Cl.² A47D *15/00*

U.S. Cl. 248—102 **6 Claims**

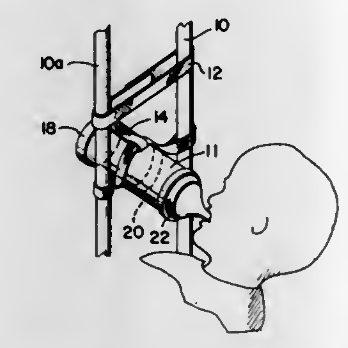

1. A holder for use in connection with a nursing bottle having a nipple and the parallel slats of a crib, comprising a first strap engaging said parallel slats and disposed transverse thereto, a second strap engaging said bottle and said slats and being transverse said slats, a third strap communicating with a disc for receiving and retaining the base of said bottle, said third strap communicating between said second strap and said disc, a portion of said third strap being looped and engaging said bottle adjacent said nipple whereby movement of said bottle between the looped portion of said third strap and said disc is restrained, wherein said second strap urges an outermost surface of said bottle to engage a portion of said first strap into touching engagement therewith, another portion of said third strap fastened to said second strap.

4,062,511

BRACKET

George F. Ray, Rockville, Md., assignor to Liskey Architectural Mfg. Inc., Baltimore, Md.

Filed Sept. 3, 1975, Ser. No. 609,906

The portion of the term of this patent subsequent to Mar. 16, 1993, has been disclaimed.

Int. Cl.² A47F *5/08, 5/16*

U.S. Cl. 248—300 **8 Claims**

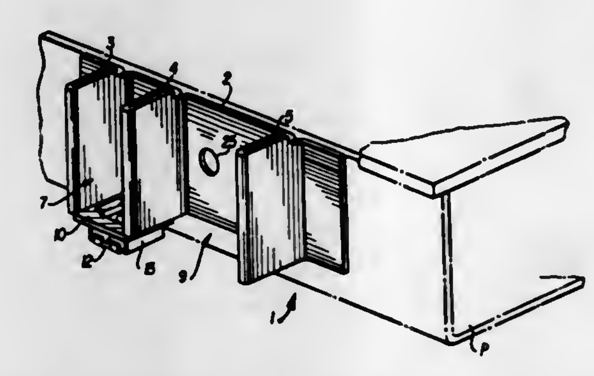

1. A bracket for attachment to a support comprising a metal strip having upper and lower edges, a back between those edges and at least three load bearing flange projections extending outwardly from said back, said projections being spaced apart from one another and at least two U-shaped recesses being formed between the projections, when said bracket is viewed in plan, said projections extending substantially vertically between said upper and lower edges, a first of said recess being greater in width than a second of said recesses and a middle projection being a side common to both of said recesses, said first recess being dimensioned to receive the second recess, together with the corresponding side projections, of an identical bracket when the projections of the two brackets are interfitted with one another to form a pair of opposing brackets.

4,062,512

CLAMP FOR SECURING BAR HANGER TO ELECTRICAL WIRING BOX

William O. Arnold, Parkersburg, W. Va., assignor to Union Insulating Company, Parkersburg, W. Va.

Filed Oct. 6, 1976, Ser. No. 729,968

Int. Cl.² A47F *5/00*

U.S. Cl. 248—309 R **8 Claims**

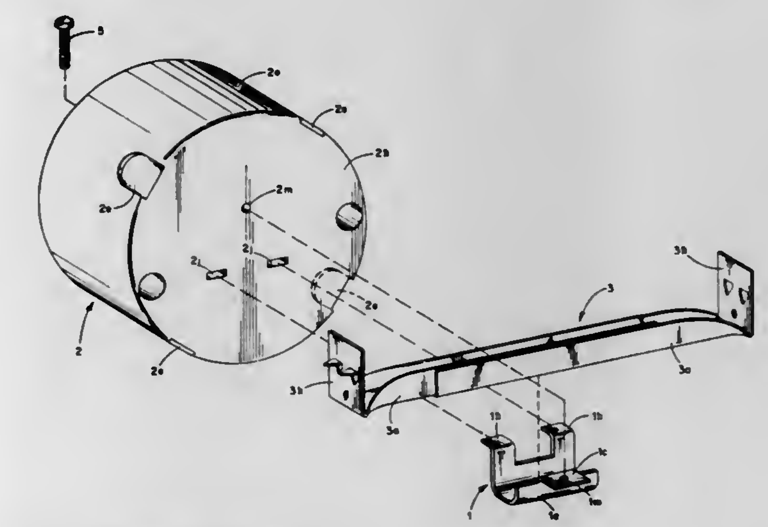

1. An assembly comprising:
- an electrical wiring box having a wall, said wall having a pair of openings therein;
- a bar hanger;
- a clamp for securing the bar hanger to the wall of the electrical wiring box, said clamp comprising:
  - a generally U-shaped portion having deformable means directed from the horizontal portion of the generally U-shaped portion into the region defined by the generally U-shaped portion;
  - a generally L-shaped tab at one side of the generally U-shaped portion, the horizontal portion of the generally L-shaped tab extending outwardly from the aforesaid side of the generally U-shaped portion, said generally L-shaped tab being adapted to be inserted into one of the openings in the wall of the wiring box and permitting the generally L-shaped tab and the wiring box to pivot with respect to each other through a predetermined angle;
  - a flange extending outwardly from the other side of the generally U-shaped portion and having an opening therein corresponding to the other opening in the wall of the wiring box;
- said clamp being operative when the bar hanger is to be secured to the wall of the electrical wiring box to receive said bar hanger within the generally U-shaped portion and, after the generally L-shaped tab and the wiring box have pivoted with respect to each other through the aforesaid predetermined angle, to capture the bar hanger against the wall of the wiring box with the deformable means bearing against the bar hanger and the flange being spaced from the wall of the wiring box with the opening therein being positioned for cooperation with the aforesaid other opening in the wall of the wiring box; and
- a fastener cooperating with the opening in the flange and the aforesaid other opening in the wall of the wiring box to draw the clamp in a direction toward the wall of the wiring box for securing the clamp and bar hanger within the generally U-shaped portion to the wall of the wiring box, said deformable means being operative when the clamp is drawn toward the wall of the wiring box to deform and to move in a direction away from the wall of the wiring box and toward the horizontal portion of the generally U-shaped portion of the clamp.

4,062,513
VERTICALLY ADJUSTABLE WALL FORMS
Lawrence Edwin Lindell, 16866 Main St., La Puente, Calif. 91744
Filed Sept. 11, 1975, Ser. No. 612,473
Int. Cl.² E04G *11/06*
U.S. Cl. 249—20 **20 Claims**

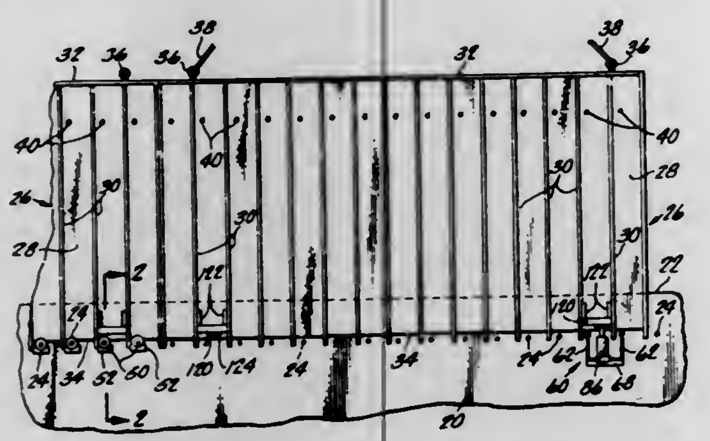

1. In combination with a poured concrete wall structure having a plurality of horizontally, uniformly spaced concrete form supporting and retaining elements projecting outwardly from upper portions thereof and with concrete retaining forms for containing concrete as additional upper portions of said wall structure above the supporting and retaining elements are poured, apparatus for adjusting the vertical positioning of the forms as they are installed and before they are retained in position, said apparatus comprising:

a. jacking means cooperating with said forms for supporting said forms in a concrete receiving position adjacent to said wall structure and for adjusting the vertical position of said forms as the forms are being installed on said wall structure, and

b means cooperating with said jacking means and supporting said jacking means from at least one of said supporting and retaining elements while the vertical position of the form is being adjusted by the jacking means and for permitting removal of the jacking means from engagement with the forms after the forms are installed on the wall structure said means cooperating with the jacking means being removable from the form supporting and retaining elements after the forms are installed.

4,062,514
SHUTTERING PANEL SYSTEM
Lyonel Scott-King, Durban, South Africa, assignor to Christopher John Scott-King, Houghton, South Africa
Filed May 17, 1976, Ser. No. 687,389
Claims priority, application South Africa, May 20, 1975, 75/3242; May 26, 1975, 75/3357
Int. Cl.² E04G *9/00, 11/06, 17/06*
U.S. Cl. 249—41 **2 Claims**

1. A shuttering system comprising a combination of a series of elements of easily-fracturable material and shuttering panels, the elements having end formations with vertical grooves, said shuttering panels having slots along the horizontal edges thereof and spaced inwardly from the vertical edges thereof, the slots of horizontally overlapped adjacent panels being aligned and engaging said vertical grooves, said grooves being a predetermined distance apart and constituting a zone of easy fracturability; and rebates adjacent the grooves receiving hori-

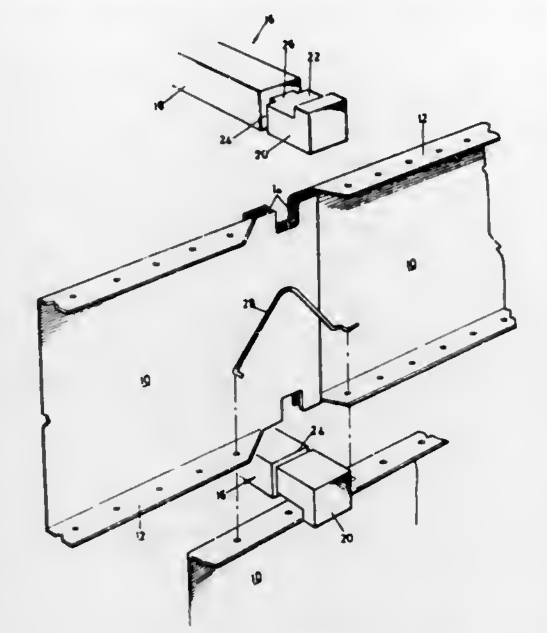

zontal flanges of the shuttering panels located immediately therebelow.

4,062,515
COMPACT GATE VALVE
Gerald E. Bobo, Knoxville, Tenn., assignor to The United States of America as represented by the United States Energy Research and Development Administration, Washington, D.C.
Filed May 13, 1976, Ser. No. 686,446
Int. Cl.² F16K *3/10*
U.S. Cl. 251—167 **10 Claims**

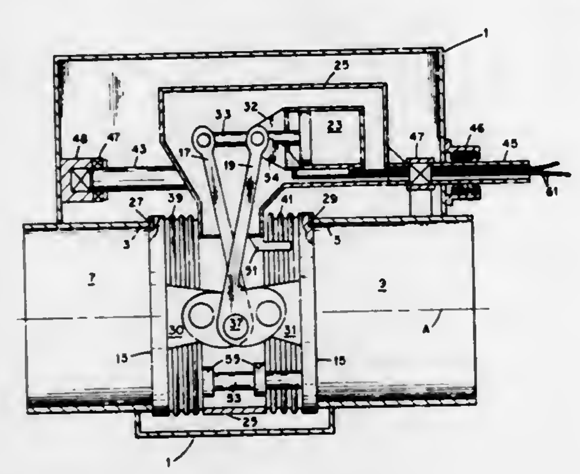

1. A gate valve comprising:

a casing enclosing annular seating surfaces defining first and second ports having a common axis;

a gate assembly mounted in said casing for arcuate movement toward and away from said common axis and including:

a. a pair of valve discs having frontal sealing surfaces for respectively engaging said seating surfaces to close said ports;

b. levers respectively connected to said discs;

c. means for operating said levers to move said discs along said axis to open and close said ports; and

d. a housing isolating said levers and said means from said casing, said housing including flexible sealing means respectively connected to said discs for accommodating movement of said discs along said axis.

4,062,516
VALVE CONSTRUCTION
Marvin H. Grove, Houston, Tex., assignor to M & J Valve Company, Houston, Tex.
Division of Ser. No. 585,228, June 9, 1975, Pat. No. 3,972,507. This application Mar. 19, 1976, Ser. No. 668,588
Int. Cl.² F16K *5/06*
U.S. Cl. 251—174 **1 Claim**

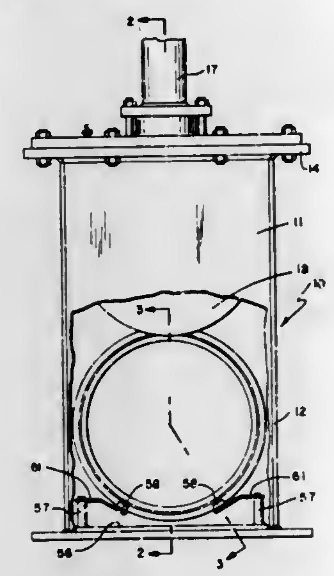

1. In a gate valve construction, a box-like valve body having end walls with aligned openings forming fluid flow passages and also having a flat plate forming a closure for the lower end of the body, a valve gate disposed within the body and movable between upper full open and lower closed positions relative to the flow passages, annular sealing assemblies surrounding the flow passages and serving to establish seals between the body and the side surfaces of the gate, each of said sealing assemblies including a metal seat ring and spring means for urging the seat ring toward the gate, the gate being dimensioned whereby when in full open position it engages only a minor upper portion of each of the seat rings, means at the upper part of the body for operating the gate, and spreader means interposed between the lower portions of the seat rings for both open and closed positions of the gate, said spreader means serving to maintain a desired predetermined spacing between the lower portions of the seat rings when the gate is moved to its open position, said spreader means comprising two spreader members located in the lower side corners of the body and normally disposed between lower portions of the seat rings to directly engage the opposed faces of said seat rings, a mounting plate disposed in the bottom of the valve body adjacent the inner side of the lower closure plate and secured to the body, and leaf springs forming yieldable means serving to secure the spreader members to the end portions of said mounting plate, said yieldable means serving to permit each spreader member to be moved downwardly against the urge of the same to an out-of-the-way position.

4,062,517
BODY FOR DISPENSER VALVE
Gerald Dovaston Jones, West Hill, Canada, assignor to Precision Valve Corporation, Yonkers, N.Y.
Continuation of Ser. No. 407,544, Oct. 18, 1973, abandoned. This application Feb. 17, 1977, Ser. No. 769,734
Claims priority, application Canada, Oct. 20, 1972, 154886
Int. Cl.² F16K *1/32*
U.S. Cl. 251—322 **1 Claim**

1. In a valve unit for a pressurized dispenser having an assembly of a coiled wire biased spring having a burred end and a one piece molded plastic valve body having a hollow valve stem at one end, a neck portion having a transverse valve orifice in communication with the hollow valve stem interior, an intermedite enlarged portion, and, at the other end, a biasing spring retaining nipple for receiving and spring, said nipple including a chamfered end and a cylindrical portion of a diameter greater than the interior diameter of said spring coil, the improvement which comprises means for separating from the body a shaving caused by the burred end of the spring, which means comprise an annular groove recessed into the cylindrical portion of said nipple adjacent said enlarged portion, said groove having a width in the axial direction at least equal to the diameter of the spring wire, the diameter of said nipple at

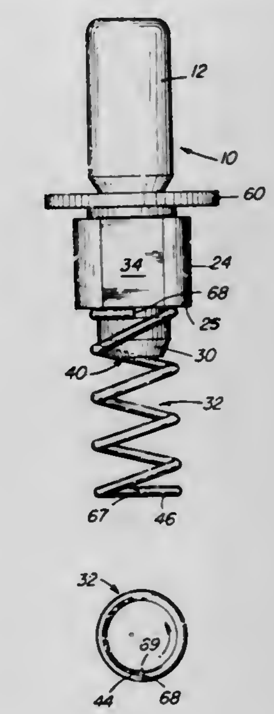

said groove being no larger than the interior diameter of said spring coil, said groove receiving the burred end of said spring to permit a shaving caused by passage of the burred end over the cylindrical portion of the body to be separated from the body upon entry of the burred end of the spring into the groove.

4,062,518
X-RAY SHIELDING DEVICE
Paul M. Stivender, Waukesha; George R. Lang, and Raymond C. Mentink, both of New Berlin, all of Wis., assignors to General Electric Company, Schenectady, N.Y.
Filed Nov. 10, 1976, Ser. No. 740,569
Int. Cl.² G21C *11/00*
U.S. Cl. 250—519 **13 Claims**

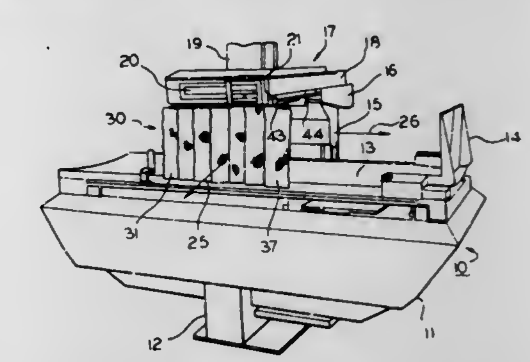

1. An x-ray shielding device for use with an x-ray table having a top for supporting an examination subject and having x-ray imaging apparatus extending over said top and in spaced relationship therewith, said shielding device comprising:

first elongated means for being disposed substantially between said table top and said imaging apparatus,

a first group of x-ray shielding panels and rotatable means respectively supporting said panels from said first elongated means for rotation about the respective axes of the panels,

a second elongated means pivotally connected to said first elongated means for being disposed alternately substantially in line with said first elongated means and at angles relative to it,

a second group of x-ray shielding panels mounted to said second elongated means, and

means responsive to pivoting of said second elongated means by rotating said rotatable means and the said first group of panels.

4,062,519
PULLEY LIFT ASSEMBLY AND CURTAIN SYSTEM EMPLOYING SAME
Lawrence O'Quinn Jacobs, Richmond, Va., assignor to Plastic Products, Inc., Richmond, Va.
Filed Oct. 21, 1976, Ser. No. 734,518
Int. Cl.² B66C *23/60*
U.S. Cl. 254—141 **5 Claims**

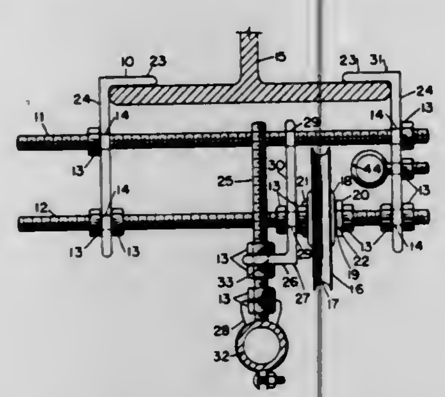

2. A pulley lift assembly comprising horizontally adjustable clamp means adapted to engage with an overhead beam, said clamp means having mounted thereon: (1) vertically adjustable means for supporting a curtain by attachment adjacent the top edge thereof, (2) a grooved wheel positioned for rotation in a vertical plane and adapted to receive a cable utilized for the lifting of at least a lower edge of said curtain, (3) a cable guard adapted to extend across the groove of said wheel at substantially the horizontal median of said wheel in a manner such that said cable will pass between said groove and said guard and (4) cable guide means for another cable utilized for the lifting of said curtain positioned in a manner such that said guide means and said vertically adjustable means are located on opposite sides of said wheel.

4,062,520
WIRE ROPE BINDER
W. W. Patterson, III, and Eugene F. Grapes, both of c/o W. W. Patterson & Company, 830 Brockett St., Pittsburgh, Pa. 15233
Division of Ser. No. 399,826, Sept. 24, 1973, Pat. No. 3,934,855. This application Oct. 2, 1975, Ser. No. 618,807
The portion of the term of this patent subsequent to Jan. 27, 1993, has been disclaimed.
Int. Cl.² A63B *61/04*
U.S. Cl. 254—161 **6 Claims**

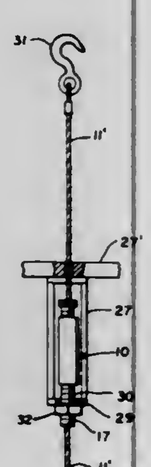

2. A wire rope binder apparatus comprising a wire rope of given length, a clamp adjustable on said wire rope to any position on its length with respect to one end thereof and having a threaded tubular extension, threaded substantially over its length, through which the other end of said wire rope coaxially projects, means for connecting said one end of the wire rope to an object, said clamp engaging said wire rope only when said wire rope is moved in a given direction, a frame means mounted independently of said clamp and having means at one end of said frame means for attachment to a second object spaced from said first object, said frame means having at the other end an opening through which the said tubular extension on the clamp extends, and nut means screwed on said threaded tubular extension adjustably bearing against said frame means for pulling said clamp relative to said frame means to apply a tensioning force to said one end of the wire rope.

4,062,521
SAFETY BARRIER WHICH IS ESPECIALLY USEFUL FOR MOTORWAY AND A METHOD OF MANUFACTURE OF THE SAID SAFETY BARRIER
Joël Paul Moreau, 62, rue Paul Bert, Suresnes, France (92153)
Filed June 7, 1976, Ser. No. 694,067
Claims priority, application France, June 12, 1975, 75.18339
Int. Cl.² E04H *17/00*
U.S. Cl. 256—1 **12 Claims**

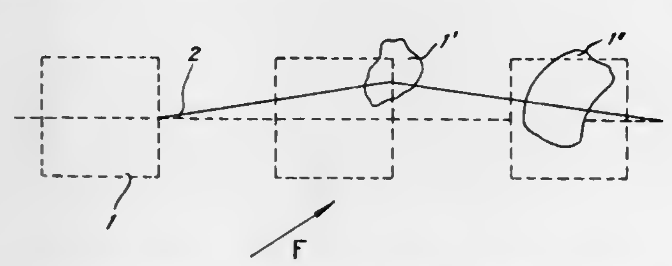

1. A highway safety barrier comprising a plurality of unanchored slidable modules, each having a mass of material designed to burst in response to internal tension rather than impact, and means for creating an internal tension in a module, upon movement of the module by a vehicle to cause the module to burst upon such movement, said means comprising, at least one common linear element fixed to the material of each module and which element is subject to tension upon movement of a module, and said linear element passing through and connecting the respective modules, so that at least the module struck by a vehicle will burst as a result of the internal tension created by the linear element in response to the impact.

4,062,522
PICKET FENCE WITH REMOVABLE INTERMEDIATE FLATS
Joseph Lepetri, 54 Fernwood Ave., Oakdale, N.Y. 11769
Filed Jan. 14, 1977, Ser. No. 759,453
Int. Cl.² E04H *17/00*
U.S. Cl. 256—1 **9 Claims**

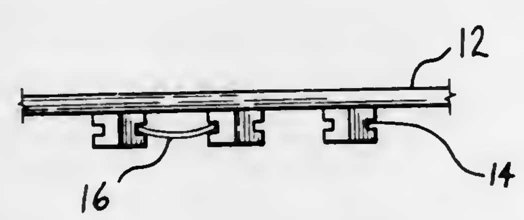

1. A picket fence comprising in combination: picket members spaced from each other and having lengthwise edges and including cross-bar means interconnecting said picket members at spaced intervals and supporting said picket members; groove means along the opposite lengthwise edges of each of said picket members; single-piece strip-shaped elements insertable in neighboring oppositely-facing grooves, the spaces between said neighboring grooves corresponding substantially to the spacing between picket members, said spacing between adjacent picket members corresponding substantially to the width of a picket member, said strip-shaped elements being of a width to cover said spaces when inserted in place in said neighboring grooves; the lengthwise edges of said strip-shaped elements being inserted only in said lengthwise neighboring grooves for covering said spaces between picket members, said strip-shaped elements being substantially parallel to said picket members and being free of contact with said cross-members interconnecting said picket members, said strip-shaped elements being selectively inserted into said groove means for preventing vision through said fence and said strip-shaped elements being selectively removable from said groove means to permit vision through said fence.

4,062,523
BAND FASTENING DEVICE FOR FASTENING A FENCE TO A POST
Michael Nowatzki, 710 Bruce Road, Lockport, Ill. 60411, and Norman J. Schmitt, R.R. No. 1 Francis Road, Mokena, Ill. 60448
Filed Oct. 4, 1976, Ser. No. 728,960
Int. Cl.² E04H *17/12*
U.S. Cl. 256—47 **3 Claims**

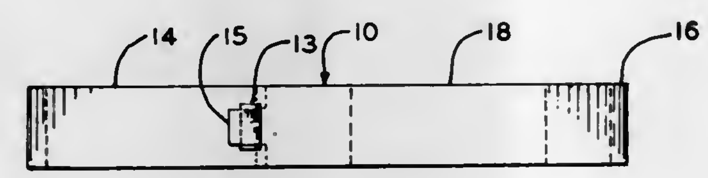

1. A band for attaching a fence to a post comprising an elongated band having a flat shank portion which has a slot therein, one end portion of said band being turned to one side of said shank portion to form a loop and having a tongue at the end thereof which extends through said slot, said tongue having a tip extending on the other side of said shank, said tip being bent rearwardly of said shank and toward said loop to lock said tongue in place, the other end portion of said band having its end turned toward said one side of said shank and toward said loop to provide a hook for engaging said fence.

4,062,524
APPARATUS FOR THE STATIC MIXING OF FLUID STREAMS
Dieter Brauner, Solingen-Wald; Hans-Joachim Kaluza, Cologne, and Edgar Muschelknautz, Leverkusen, all of Germany, assignors to Bayer Aktiengesellschaft, Leverkusen, Germany
Continuation of Ser. No. 474,836, May 30, 1974, abandoned. This application Aug. 24, 1976, Ser. No. 717,073
Claims priority, application Germany, June 6, 1973, 2328795
Int. Cl.² B01F *15/02*
U.S. Cl. 366—340 **17 Claims**

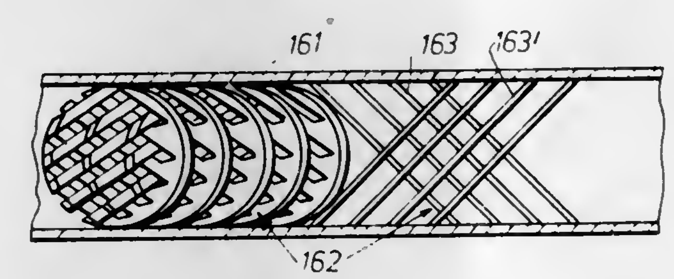

1. Apparatus for the static mixing of a fluid stream which comprises a pipe provided with at least one mixing insert comprising at least two plates provided with webs defining slots therebetween, the webs of one plate extending cross-wise through the slots of at least one other plate which is set at an angle to the first plate, said insert being suitable for insertion into the pipe to provide static mixing of the stream of fluid flowing in the pipe, the plates being inclined at an angle to the axis of the pipe, the circumferential surface of each plate fitting snugly against the wall of the pipe.

4,062,525
FOAM MIXING HEAD
Thomas Harmon, Hamilton, Ohio, and Tracy Keeling, Houston, Tex., assignors to Kornylak Corporation, Hamilton, Ohio
Filed Apr. 22, 1975, Ser. No. 570,455
Int. Cl.² B29B *1/06*
U.S. Cl. 366—138 **21 Claims**

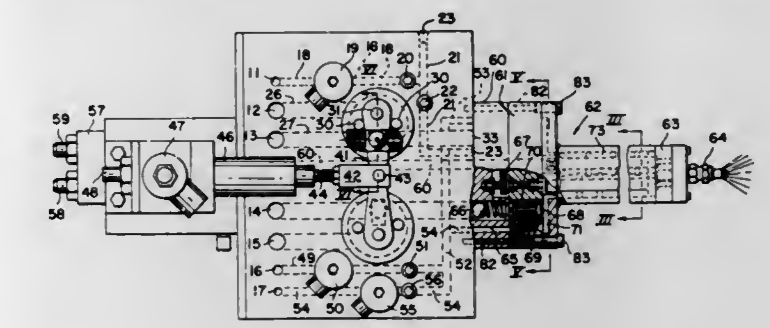

1. An apparatus for mixing at least two foamable fluent chemicals and depositing the chemicals in a mold cavity, the improvement comprising: controllable valve means for selectively supplying and not supplying separately the two chemicals; two automatic valve means normally biased closed and opened at a predetermined fluid pressure on their inlet side for passing fluids to their outlet side; conduit means fluid connected between each of said controllable valve means and a separate one of said automatic valve means for separately conducting the two chemicals supplied by said controllable valve means to the inlet sides respectively of said automatic valve means; a mixing chamber in direct fluid communication with the outlet sides of said automatic valve means for commonly receiving both of said chemicals passing respectively through said automatic valve means; mechanically driven means operatively mounted within said mixing chamber for mixing said two chemicals in said mixing chamber; means operatively associated with said mixing chamber for discharging the thus mixed chemicals from said mixing chamber to the mold cavity; motor means operatively associated with said mechanically driven mixing means for driving said mechanically driven mixing means; a main body carrying said motor means and said controllable valve means; drive means mechanically connected to said main body for moving said main body toward and away from a mold cavity; a mixing head being supportively connected at one end to said main body and extending as a cantilevered beam freely from said main body at its one end toward its opposite end, said mixing head carrying said discharge means adjacent its opposite end, and further carrying said mixing chamber, said mechanically driven means and said automatic valve means.

4,062,526
METHOD OF AND APPARATUS FOR CONDITIONING PULP
Charles A. Green, Apartado 82, Parral, Chihuahua, Mexico
Filed Jan. 26, 1976, Ser. No. 652,528
Int. Cl.² B01F *5/16*
U.S. Cl. 366—171 **15 Claims**

6. Apparatus for conditioning pulp in a tank, comprising:
an impeller disposed adjacent but spaced from the bottom of said tank, having agitation and pumping means for receiving pulp and the like centrally and discharging the same outwardly;
means for rotating said impeller about a substantially vertical axis;
means for supplying pulp to said impeller;
means for supplying a conditioning reagent to the center of said agitation and pumping means;
means surrounding said impeller for receiving a pulp mixture from said agitation and pumping means for interrupting

the circular flow of said pulp mixture to produce an intermixing of said pulp with said conditioning reagent; and

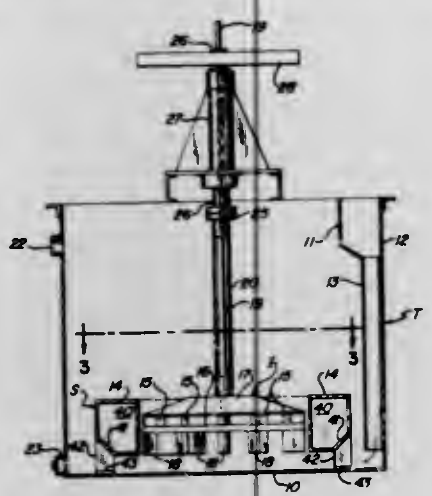

cover means overlying and engaging at least a portion of said interrupting means.

4,062,527

VIBRATION DEVICE FOR SILOS FOR BULK MATERIALS

Josef Schmitz, Thyssenstrasse 44, Dinslaken, Germany (422)

Filed May 14, 1976, Ser. No. 686,523

Int. Cl.² B01F *5/26*

U.S. Cl. 366—114 **6 Claims**

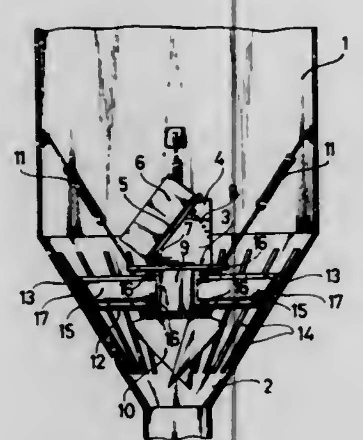

1. A vibration device for loosening bulk material in a silo having a delivery funnel, comprising:

a support member disposed in said funnel and provided with a rosette of downwardly extending guide wings;

means elastically suspending said supports in said funnel;

a cage member surrounding said support and disposed proximal to the walls of said funnel and formed with downwardly and inwardly inclined walls;

longitudinally and torsionally elastic spring elements in the form of coil springs interposed between said cage member and said support member;

a jolting motor mounted on said support member for imparting vibration to said support member, the vibration being transmitted by said spring elements to said cage member;

elastic buffers supporting said cage member on the walls of said funnel, said cage being formed with a plurality of inwardly extending arms and said support having an intermediate portion disposed below said support and carrying said rosette of guide wings, said spring elements being disposed between said intermediate portion and said arms;

said support comprising a frame disposed above said arms, said coil springs being disposed between said frame and said arms and between said arms and said portion; and

means for adjusting the tension forces of said coil springs.

4,062,528

DEVICE FOR DIRECT ANNEALING OF METAL WIRE LEAVING AN OPERATING MACHINE

Carlo Olivero, Turin, Italy, assignor to Ditta M. El. F.O., Turin, Italy

Filed Jan. 19, 1977, Ser. No. 760,541

Claims priority, application Italy, Jan. 19, 1976, 67110/76

Int. Cl.² C21D *9/56*

U.S. Cl. 266—103 **4 Claims**

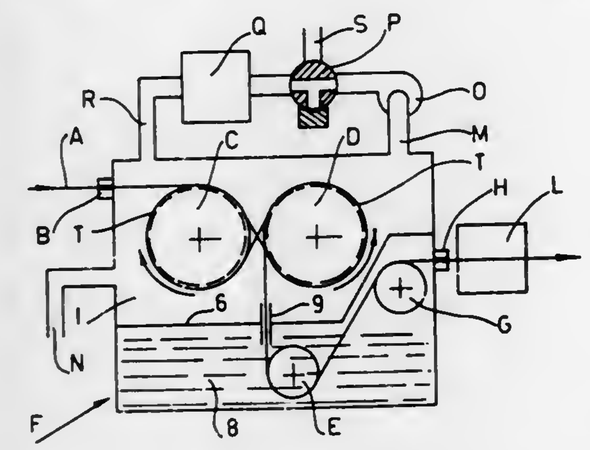

1. Device for annealing metal wire leaving an operating machine, comprising at least one drum with parallel axes supported inside a sealed heating chamber with a heated inert-fluid production source, said chamber being provided with a hermetically sealed inlet for supplying metal wire to said heating chamber, said drums being designed to heat the wire by direct conduction and subjected to the action of heating devices acting internally or externally to heat at least their cylindrical surfaces up to a temperature sufficient to achieve annealing of the metal wire coiled around them, and being provided externally with one or more circumferential grooves able to receive the wire coiled around them; a circuit for closed-loop circulation and heating of the inert fluid in the heating chamber and for evacuation of the air contained therein at the beginning of the operating cycle, comprising an aspirator-compressor connected directly at its inlet with the heating chamber and at its outlet with a heat exchanger, the outlet of which is connected in its turn with the heating chamber, as well as a valve disposed in the pipe connecting the aspirator-compressor to the heat exchanger, able, in a first position, to provide said connection and, in a second position, to place the aspirator-compressor in communication with the outside atmosphere; a cooling chamber, connected to the heating chamber, containing a cooling fluid, provided with a hermetically sealed outlet for outward passage of the metal wire; and means for drying the metal wire disposed downstream of said cooling chamber outlet for the wire.

4,062,529

APPARATUS FOR THE DIRECT REDUCTION OF IRON ORE TO SPONGE IRON

Klaus Altenhöner, Gahlen; Walter Jansen, Mulheim; Klaus Knop, Oberhausen, all of Germany, and Jan G. Reering, Rio de Janeiro, Brazil, assignors to Thyssen Purofer GmbH, Dusseldorf, Germany

Filed Dec. 17, 1975, Ser. No. 641,619

Claims priority, application Germany, Dec. 18, 1974, 2459876

Int. Cl.² C21B *13/02*

U.S. Cl. 266—156 **5 Claims**

1. An apparatus for the direct reduction of iron ore, especially iron-ore pellets, comprising in combination a shaft furnace for reducing the iron ore to iron with a reducing gas:

exhaust-gas circulating means for recirculating exhaust gas from said furnace to the latter as part of a reducing gas supplied thereto;

a gas generator for the partial combustion of a carbon-containing and sulfur-containing energy carrier with oxygen, air or an oxygen carrier to form a fresh gas;

a mixer for mixing said fresh gas with a portion of the recirculated exhaust gas;

a desulfurizing washer disposed between said gas generator and said mixer for removing at least a portion of the sulfur present in said fresh gas and cooling same to a temperature of about 50° C to 100° C;

a carbon-oxide washer upstream of said mixer along said circulating means for removing at least a portion of the carbon dioxide of the recirculated exhaust gas delivered to said mixer; and

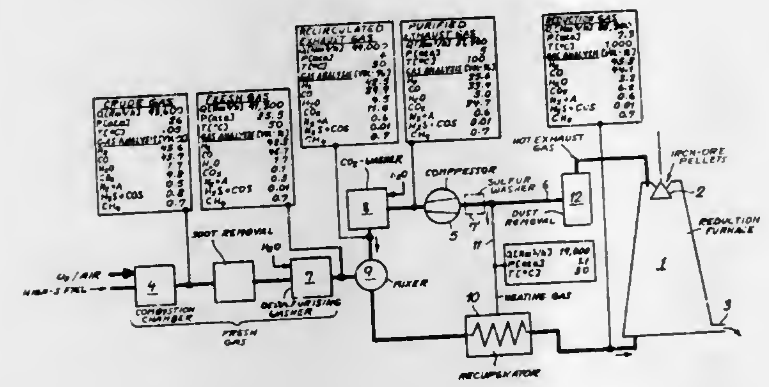

a recuperator between said mixer and said furnace for heating the mixture of fresh gas and exhaust gas formed in said mixture to a temperature of about 1000° C, thereby forming the reducing gas which is admitted to said furnace at the latter temperature, at least one of said washers serving to adjust the relationship of carbon oxides and sulfur in the mixture to a level limiting soot formation during heating of said mixer in said recuperator, said mixer being provided directly upstream of said recuperator whereby the mixture formed in said mixer enters the recuperator directly upon formation.

4,062,530

OXYGEN-LIME DISTRIBUTOR FOR STEELMAKING VESSEL

David Kallom Griffiths, Penn Hills Township, Allegheny County, Pa., assignor to United States Steel Corporation, Pittsburgh, Pa.

Filed Mar. 7, 1977, Ser. No. 775,082

Int. Cl.² C21C *5/48*

U.S. Cl. 266—222 **13 Claims**

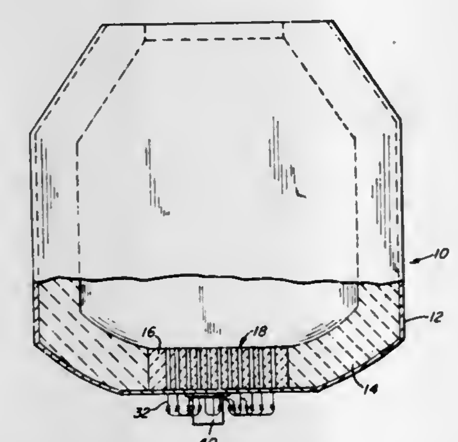

1. A distributor manifold comprising

a. a hollow cylindrical body;

b. means dividing the interior of said body into axially spaced portions;

c. means connecting said portions into mutual fluid communication;

d. inlet means for introducing supply fluid to one of said portions and for imparting a spinning motion therein whereby said fluid is induced by cyclonic action to traverse a path from said one portion through said connecting means to the other of said portions;

e. means for discharging supply fluid from the other of said portions; and

f. baffle means diverting the path of fluid flow away from registry with supply fluid introduced through said inlet means.

4,062,531

FERRUGINOUS SLAG OXIDIZING APPARATUS

Kiyoshi Takai, Nishinomiya, Japan, assignor to Osaka Iron & Steel Co., Ltd., Osaka, Japan

Filed Jan. 24, 1977, Ser. No. 761,993

Claims priority, application Japan, July 7, 1976, 51-79847

Int. Cl.² C21C *7/00*

U.S. Cl. 266—226 **6 Claims**

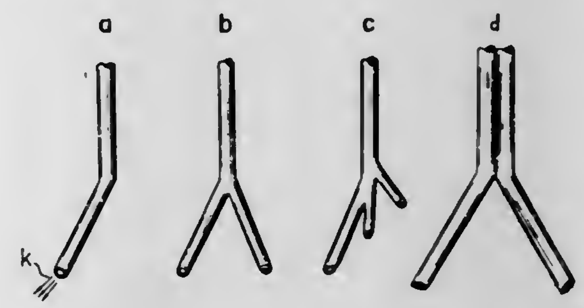

1. Apparatus for oxidizing and mixing molten ferruginous metallurgical slags, which comprises;

a blow lance having an open inlet end, an open nozzle end, a plurality of nozzles positioned on said nozzle end, at different distances from said inlet end, and a hollow pipe joining said ends, the axis of each of said nozzles being disposed at an angle of less than 90° but more than 0° to the vertical;

support means for said lance, attached to the lance and adapted to raise the lower said lance in a vertical plane;

means for rotating said lance about its vertical axis, said rotating means being connected to said lance; and

means for cooling said lance attached to the lance.

4,062,532

APPARATUS FOR FEEDING AND TRANSPORTING PAPERBOARD BLANKS

Jakob Peter, Carmel, Ind.; Perry D. Thatcher, and Kenneth L. Steele, both of Middletown, Ohio, assignors to Koppers Company, Inc., Pittsburgh, Pa.

Filed Apr. 23, 1976, Ser. No. 679,813

Int. Cl.² B65H *3/04, 3/56, 5/02*

U.S. Cl. 271—6 **3 Claims**

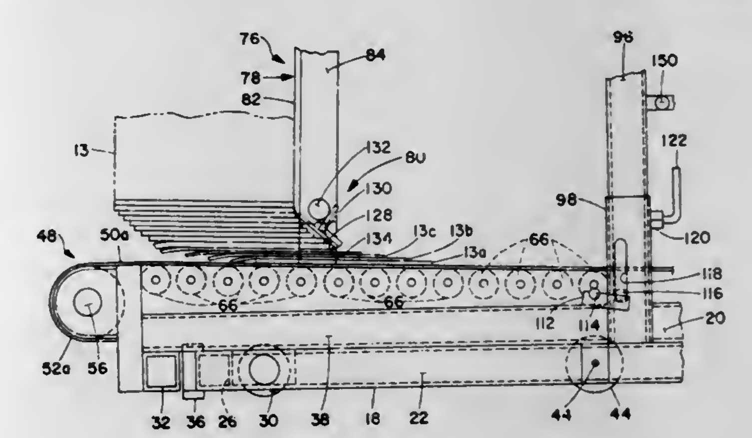

1. A feeder apparatus for advancing paperboard blanks from a stack of blanks along a predetermined path of travel in shingled fashion, said apparatus including:

a frame means;

a first conveyor means supported by said frame means and defining a first reach of said path; and

a gate means supported by said frame means in overlying relation to said first conveyor means and defining with

said first reach of said path of blank material receiving area to receive blanks in stacked form,
said gate means including an upstanding wall having a lower edge parallel to and spaced upwardly from said first reach of said first conveyor means,
said upstanding wall establishing a stop surface for abutment by common side edges of said blanks to maintain said blanks in stacked form.
said gate means including a control plate pivotally supported adjacent said lower edge of said upstanding wall,
said control plate being angularly inclined relative to the plane of said first reach of said conveyor means at an angle of inclination of between about 35°-40°,
said control plate having a lower edge disposed parallel to said first reach of said conveyor means and spaced thereabove a distance sufficient to allow a predetermined number of said sheets to pass therebeneath upon movement thereof with said conveyor means along said first reach,
said inclined control plate being operative to effect shingling of said blanks passing from the bottom of said stack along said first reach beneath said control plate.

4,062,533
PHOTOCOPY MACHINE
Burton Greenberg, Skokie, and James George McCarthy, Park Ridge, both of Ill., assignors to Oce-Industries Inc., Chicago, Ill.
Division of Ser. No. 459,655, April 10, 1974, Pat. No. 3,989,238. This application Oct. 23, 1975, Ser. No. 625,263
Int. Cl.² B65H *5/06, 3/44*
U.S. Cl. 271—10 **3 Claims**

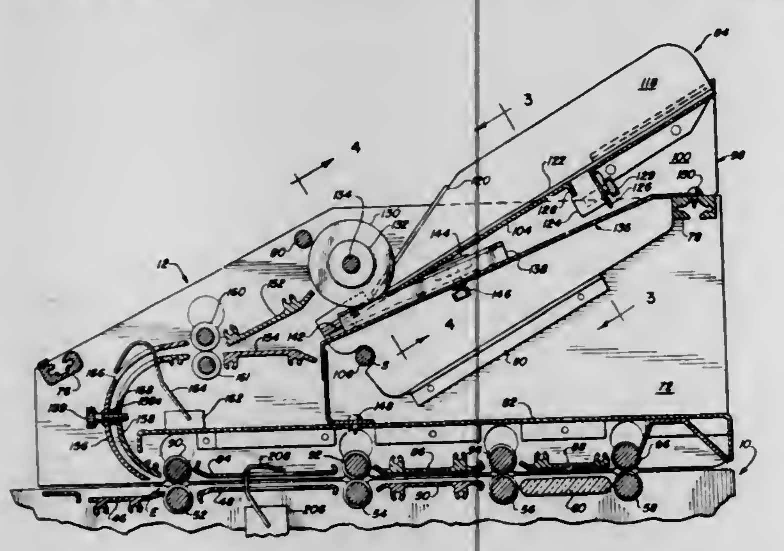

1. In a photocopy machine having a horizontal original document feed deck, an original document transport system comprising means for successively withdrawing the individual documents from a document stack, and means for receiving each withdrawn document and feeding the same along a feed path that includes a direction reversing bend section followed by a horizontal straight line section aligned and coplanar with the deck, the last named means including means defining an access entryway to the straight line section of the feed path aligned with the deck for enabling original document insertion directly from the deck into the straight line section.

4,062,534
STRIPPER ARRANGEMENT FOR REMOVING VARIOUS SIZED COPY SHEETS FROM FUSER ROLL
Akira Sasahara, Ebina, Japan, assignor to Rank Xerox Ltd., London, England
Filed Sept. 27, 1976, Ser. No. 726,868
Claims priority, application Japan, Jan. 30, 1976, 51-008637[U]
Int. Cl.² B65H *29/56*
U.S. Cl. 271—174 **1 Claim**

1. In a contact heat fixing device including a heated roll for use in electrophotographic copying apparatus, stripping mechanism for stripping copy paper from a heated fuser roll to which the copy paper tends to adhere by virtue of tacky toner material forming images on the copy paper; said stripping apparatus comprising:
a first set of stripping pawls supported in contact with said heated roll, said first set of stripping pawls being spaced apart a first predetermined distance suitable for optimally stripping copy paper of a first size;
a second set of stripping pawls supported in contact with said heated roll, said second set of stripping pawls being spaced apart a second predetermined distance suitable for

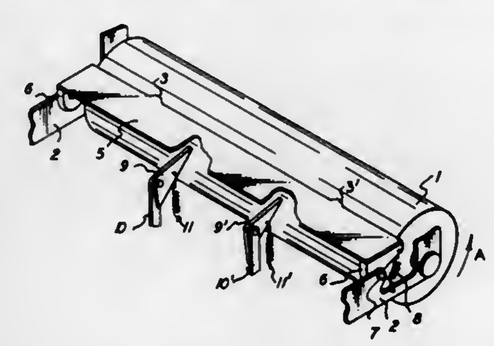

optimally stripping copy of a second size different from said first size;
said first set of stripping pawls being formed integrally to a support plate mounted for pivotal movement relative to said heated roll and said second set of stripping pawls being pivotably supported independently of said first set of stripping pawls for engagement with said heated fuser roll; and
said first and second sets of stripping pawls contacting said heated fuser roll at different locations along the circumference thereof.

4,062,535
APPARATUS FOR HANDLING SHEETS OF MATERIAL
Carl D. Charbonnet, 700 Braddock Ave., Birmingham, Ala. 35213
Filed Oct. 18, 1976, Ser. No. 733,382
Int. Cl.² B65H *29/54*
U.S. Cl. 271—174 **2 Claims**

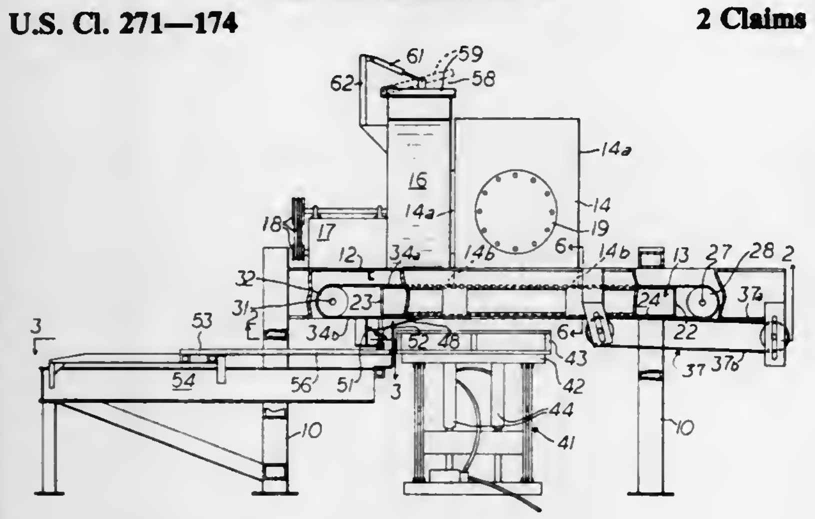

1. In apparatus for handling sheet-like material,
a. a material pick-up station,
b. a material discharge station,
c. a plenum maintained under sub-atmospheric pressure and having openings to atmosphere in a lower wall thereof,
d. an endless carrier member having upper and lower flights, said lower flight passing closely adjacent the lower wall of the plenum,
e. means at said pick-up station to present sheets of said material to the lower surface of the lower flight of the carrier, whereby the sheets are held for movement with said lower flight,
f. means to remove the sheets from said flight of the carrier at the discharge station comprising a stripper member adapted to enter between the sheet being conveyed and the lower wall of the plenum, thereby to reduce the holding effect due to the total differential pressure on the sheet to a value less than the weight of the sheet, and
g. means supporting said stripper for vertical adjustment toward and from the bottom wall of the plenum, whereby to accommodate the apparatus to the handling of sheets of different weights and flexibility.

4,062,536
DOCUMENT AIR VALVE
Gunnar P. Michelson, Van Nuys, Calif., assignor to NCR Corporation, Dayton, Ohio
Filed Sept. 16, 1976, Ser. No. 723,694
Int. Cl.² B65H *29/24*
U.S. Cl. 271—177 **11 Claims**

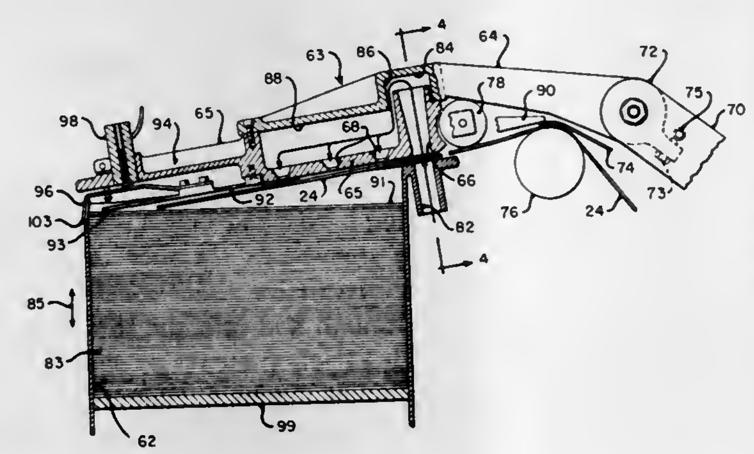

1. Document control means for stacking documents in a pocket including
means for driving said documents in the direction of said pocket, a
passageway for guiding said documents in successive manner, an air chamber adjacent said passageway and pivotable in relation to said pocket and having entrance means and exit means downstream of said extrance means for flow of air through said chamber, means providing a continuous flow of air through said entrance means, the movement of a document past said entrance means interrupting the flow of air through said entrance means when passing thereby and after passing said entrance means permitting air to flow through said air chamber and out said exit means to move one document out of the path of a succeeding document, and sensing means responsive to the presence of documents in said pocket to maintain a level of documents therein.

4,062,537
APPARATUS FOR THE INFEED OF PRINTED PRODUCTS TO A STACKER
Felix Dietrich, Uster, Switzerland, assignor to Ferag AG, Hinwil, Switzerland
Filed Sept. 13, 1976, Ser. No. 722,888
Claims priority, application Switzerland, Oct. 8, 1975, 13063/75
Int. Cl.² B65H *29/50, 29/04*
U.S. Cl. 271—201 **11 Claims**

1. An apparatus for delivering an imbricated stream of printed products to a stacker, comprising an infeed station, an outfeed station and a conveyor extending between said stations, said conveyor being provided with spaced grippers for laterally gripping the imbricated stream of printed products, said conveyor comprising a substantially vertically travelling run, said outfeed station comprising means for deflecting a loop out of said run, said loop having a leg terminating at an apex of said loop, opening means positioned in the range of said leg for opening the grippers, a conveyor belt running parallel to said leg for receiving the imbricated stream of printed products thereon and having an outfeed portion extending past said apex of said loop, means for driving said conveyor and said conveyor belt in synchronism, said guide means, opening means and said conveyor belt being mounted in a frame, a lift drive for displacing and guiding said frame along said vertically travelling run, said frame being provided with a feeler for

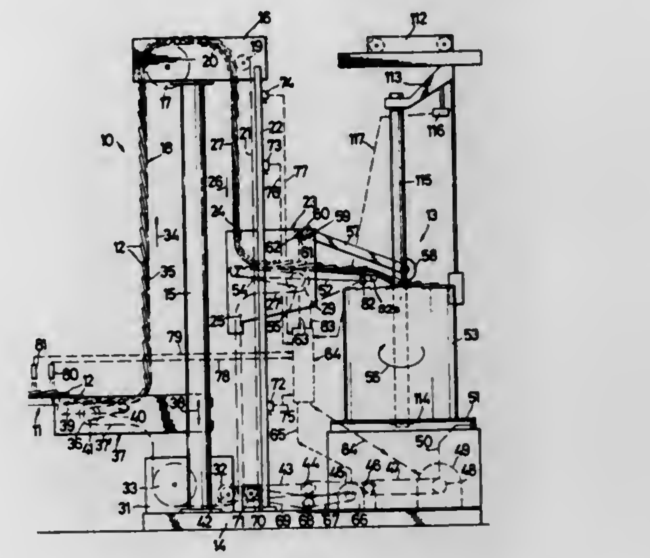

scanning the height of the stack and for switching-on and switching-off said lift drive as a function of the response of said feeler.

4,062,538
SPEED REGULATED FLUIDIC SHEET TRANSPORT
Klaus K. Stange, Pittsford; Richard E. Smith, Webster; Thomas J. Hamlin, Macedon, and James R. Cassano, Penfield, all of N.Y., assignors to Xerox Corporation, Stamford, Conn.
Filed Jan. 15, 1976, Ser. No. 649,757
Int. Cl.² B65H *9/00, 5/22*
U.S. Cl. 271—243 **8 Claims**

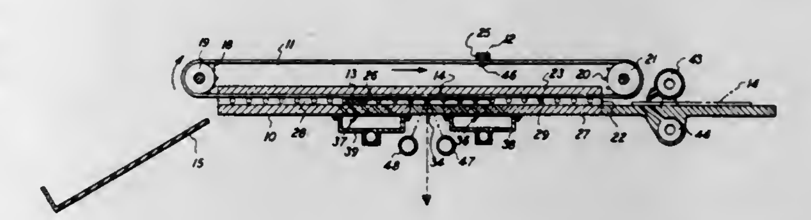

1. Apparatus for moving a sheet at a predetermined speed, comprising:
an elongated sleeve, having an oblong cross section, for internally accommodating said sheet, said sleeve having a pair of substantially parallel wide walls and a pair of narrow walls between the wide walls, one of the narrow walls having a plurality of ports;
b. means for longitudinally moving an abutment through the sleeve, including a belt passing longitudinally through the the sleeve and means for moving the belt, said abutment having openings;
c. means for providing in the sleeve a fluid stream having a velocity component in the direction in which the abutment moves through the sleeve, whereby when the sheet is placed in the sleeve an edge thereof is moved against the abutment and the narrow wall having ports by the stream as it passes through the openings and ports and thereafter the sheet moves through at least a longitudinal section of the sleeve with the same speed as the abutment; and
d. fluidic means for biasing the sheet against said belt as the sheet passes through at least part of said longitudinal section.

4,062,539
AUTOMATIC CONTROL SYSTEMS FOR RIPPERS FOR USE IN CIVIL WORKS
Iwao Tetsuka; Kusuo Kato; Yasuyuki Takahashi, and Tomoharu Sano, all of Hirakata, Japan, assignors to Kabushiki Kaisha Komatsu Seisakusho, Tokyo, Japan
Filed June 28, 1976, Ser. No. 700,519
Claims priority, application Japan, June 30, 1975, 50-80697; June 30, 1975, 50-80698
Int. Cl.² A01B *63/112*
U.S. Cl. 172—9 **5 Claims**

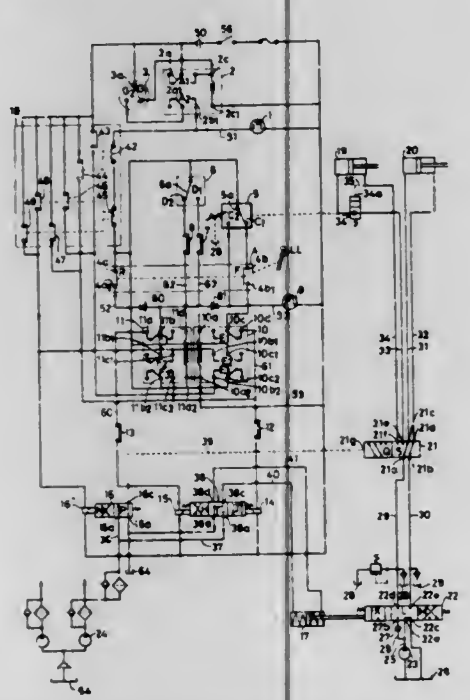

4. An automatic control system for a ripper utilized in a civil work comprising a switch circuit for selecting and commanding the raising and lowering of the shank of the ripper when entering into a digging region from a piercing region and the raising and lowering of the shank when entering into the piercing region from the digging region; first detecting means for detecting the fact that the shank is in the piercing region or in the digging region; second detecting means for detecting the fact that the shank angle is at a preset piercing angle or a preset digging angle; third detecting means for detecting an overload condition of the shank; fourth detecting means for detecting upper and lower limit positions of the shank; an electric control signal generating circuit for generating a first control signal for commanding the tilting and lifting of said shank in accordance with the output from said first to fourth detecting means at the time of said lowering command, and a second command signal which effects extension, contraction and stop of a tilting cylinder for the shank at the time of a tilting command, and effects the contraction of said tilting cylinder only at the time of overload and at the time of a lifting command; said electric control signal generating circuit generating said first control signal that commands the lifting and tilting of said shank in response to the output from respective detecting means at the time of said raising command, and generating said second control signal that commands the extension, contraction and stop of the tilting cylinder for said shank at the time of said tilting command, and commands the contraction and stop of said lifting cylinder at the time of the lift command; a tilt-lift transfer controlling fluid pressure circuit including a first electromagnetic transfer valve actuated by said first control signal, and a lift-tilt transfer valve actuated by the operating fluid supplied by said first electromagnetic transfer valve for supplying the operating fluid to the selected one of said lifting cylinder and said tilting cylinder; and a fluid pressure circuit for controlling the direction of flow of the operating fluid including a second electromagnetic transfer valve actuated by said second control signal, and a main transfer valve actuated by the operating fluid supplied by said second electromagnetic transfer valve for switching the direction of the operating fluid supplied to respective cylinders thereby selectively performing the lowering control and the raising control of said shank.

4,062,540
BOWLING BALL CONTROL DEVICE
Danny D. Calentine, 4002 York Road, South Bend, Ind. 46614
Filed Aug. 16, 1976, Ser. No. 714,295
Int. Cl.² A63B *71/14*
U.S. Cl. 273—54 B **13 Claims**

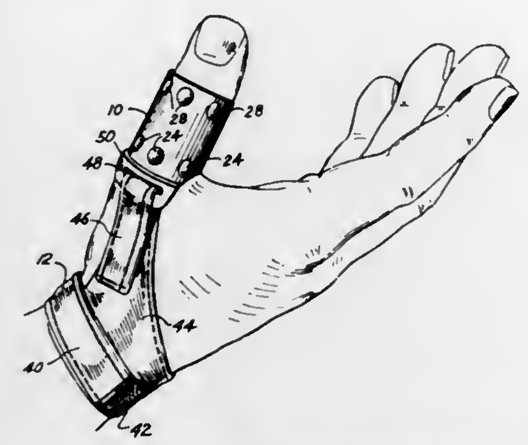

1. A device for controlling a bowling ball having a thumb hole therein, comprising a sleeve-like member of generally cylindrical shape and of substantially rigid construction for slipping onto the bowler's thumb and into the thumb hole in the ball, said member having a friction means on the outside of the sleeve-like member adjacent the back side of the thumb when disposed in said member, said friction means having a greater co-efficient of friction than the remainder of the external surface of said sleeve-like member, for transmitting a control force between the thumb and the bowling ball, and a means for retaining said sleeve-like member on the bowler's thumb.

4,062,541
PADDLE CONSTRUCTION
Nathan Marks, Englewood Cliffs, N.J., assignor to Marcraft Recreation Inc., Garfield, N.J.
Filed Feb. 25, 1976, Ser. No. 661,235
Int. Cl.² A63B *49/12*
U.S. Cl. 273—73 C **10 Claims**

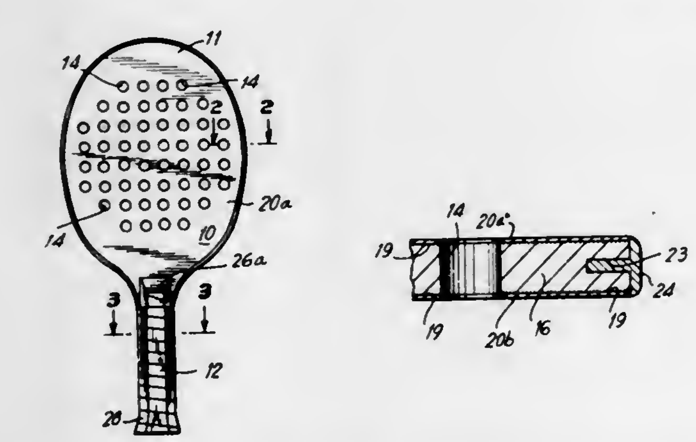

1. A game paddle construction comprising in combination a blade portion, said blade portion including a core consisting essentially of wood having a uniform thickness defined by opposed substantially planar surfaces, and first and second metal skin layers bonded to said opposed planar surfaces of said wood core for defining the striking surfaces of said game paddle, said blade portion including a plurality of through holes therein, each of said through holes being defined by said wood core and said metal skin layers, and handle means affixed to said blade portion, said handle means including grip means surrounding a substantial lengthwise extent of said handle means.

4,062,542
TETHER BALL GAME
Louis Manera, 11846 N. Schwemer Lane, Mequon, Wis. 53092
Filed Dec. 27, 1976, Ser. No. 754,411
Int. Cl.² A63F *9/00;* **A63H** *1/32*
U.S. Cl. 273—95 A **7 Claims**

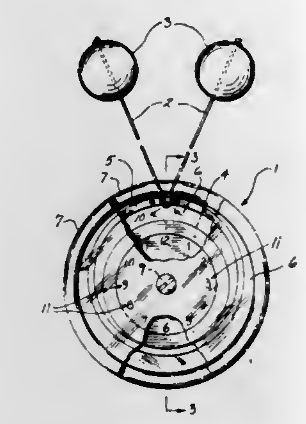

1. In a game for simultaneously swinging in opposite directions a pair of balls or the like on the ends of a tether, a handle assembly comprising:

a. an annular generally flat core,
b. means rotatable eccentrically about said core for securing the said tether,
c. a pair of annular members of larger diameter than said tether securing means and with said members confining said core and tether securing means therebetween,
d. and means loosely securing said assembly together on a central axis of said core and annular members.

4,062,543
HELICAL SPRING GAME
Ronald Loeffler, 2100A Evergreen Lane, Point Pleasant, N.J. 08742
Filed Aug. 9, 1976, Ser. No. 712,846
Int. Cl.² A63F *7/02;* **A63B** *71/04*
U.S. Cl. 273—110 **1 Claim**

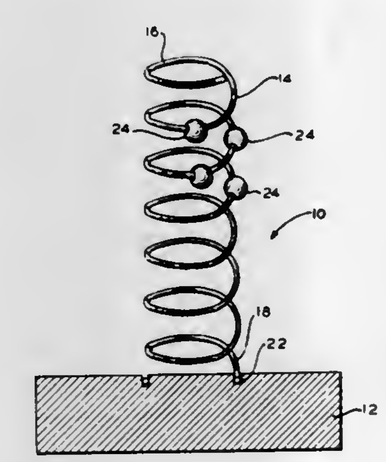

1. Entertainment apparatus providing a game to be played, comprising:

a base;
a helical spring having a top end and bottom end, said bottom end being secured to said base to mount the spring to the base and to position the spring in a normally vertical position on the base, and said spring defining a helical path between said top end and said bottom end thereof;
a plurality of travelling means, said travelling means mounted slidably on said spring and being displaceable downwardly along the helical length of the spring between said top and said bottom ends thereof upon said spring vibrating;
a plurality of markers disposed on said base around said spring and said markers defining directions toward which said spring is displaceable; and
upon said spring being displaced from its normally vertical position towards one of said markers and then being released, said spring vibrating and returning to its normally vertical position and said vibrating spring causing said plurality of travelling means to be displaced downwardly along the length of said spring between said top and bottom ends thereof.

4,062,544
BOARD GAME UTILIZING OWNER OPERATED BUSINESSES
Anthony Hankins, 1207C Solano, Albany, Calif. 94706
Filed Nov. 20, 1975, Ser. No. 633,912
Int. Cl.² A63F *3/00*
U.S. Cl. 273—134 AF **5 Claims**

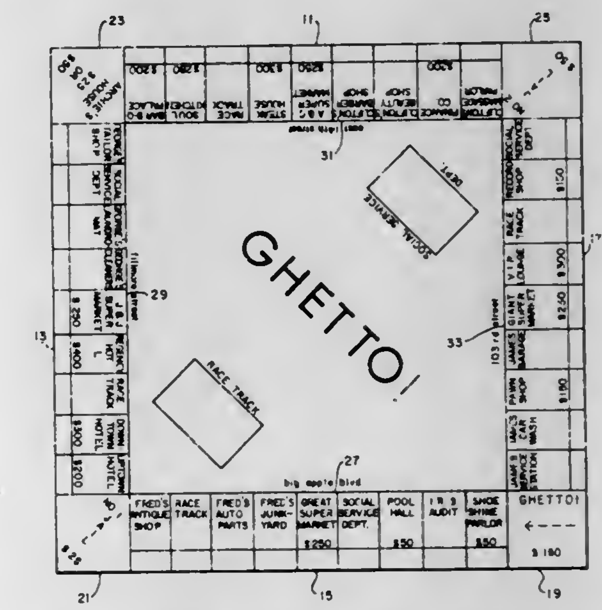

1. A board game utilizing owner operated businesses wherein players strive by chance to maximize their financial worth comprising

means for identifying each player by a fictitious name prior to commencing play,
tokens for each identified player,
bogus money which can be used for acquiring said businesses or paying for services or the like,
a game board having a plurality of contiguous play spaces disposed generally around the perimeter of said board so as to define a continuous play field on which said tokens can be moved, certain of said play spaces in said play field designating different business each of which is identified to a particular player by said fictitious name and subject to acquisition and operation by the player so identified as against opponent players, and certain of said play spaces in said play field designating different businesses not identified to any particular player and subject to acquisition and operation by any of said players as against opponent players, said player identified business property being capable of acquisition by the identified player at no cost to him if he chances to land on the play space so designating said business property, and said non-identified businesses being capable of acquisition at a predetermined purchase price by any of the players who chances to land on the play space so designating said business property, and
a chance means for advancing said player tokens around the play field on said game board.

4,062,545
DOWNHILL SKI RACING GAME
Brian G. Witney, 6928 Bilbao Lane, Mississauga, Ontario, Canada
Filed July 19, 1976, Ser. No. 706,483
Int. Cl.² A63F *3/00*
U.S. Cl. 273—134 AE **7 Claims**

1. A board game for downhill ski racing comprising:
a playing board having a three-dimensional upper portion;

a ski route disposed on the upper surface of said three-dimensional portion, said ski route formed from a plurality of contiguous squares having start and finish squares said ski route including a pair of alternate paths of different lengths intermediate said start and finish squares;

a plurality of playing pieces each being moveable along and securable to said ski route;

means for determining the number of said contiguous squares to move each said playing piece on said route during the play of said game;

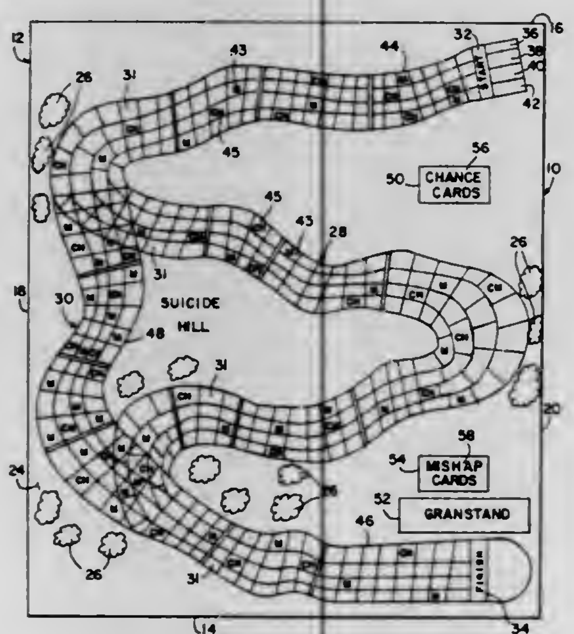

a plurality of mishap cards selected upon the landing of one of said playing pieces on a contiguous square having suitable indicia directing the selection of a mishap card; and

a plurality of chance cards selected upon the landing of one of said playing pieces on a contiguous square having suitable indicia directing the selection of a chance card,

the shorter of said two paths having a greater number of contiguous squares bearing said mishap suitable indicia than the longer of said two paths.

4,062,546
CHESS GAME APPARATUS
Roger L. McIntyre, P.O. Box 525, Chandler, Ariz. 85224
Filed July 12, 1976, Ser. No. 704,369
Int. Cl.² A63F *3/02*
U.S. Cl. 273—136 F **7 Claims**

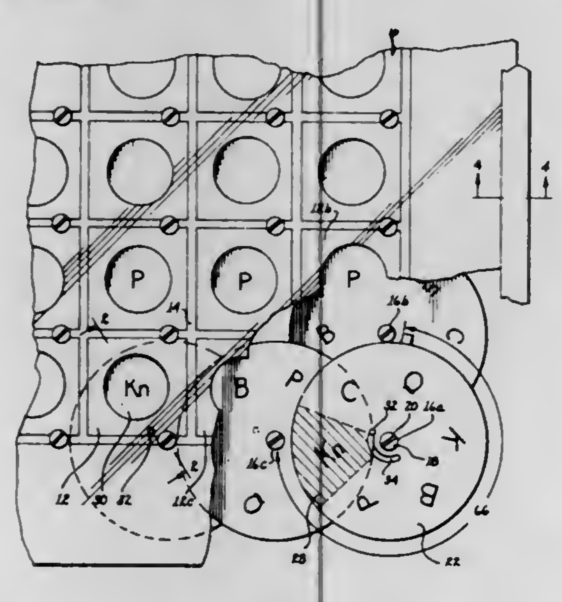

1. A game apparatus for playing a game employing two players and six player pieces per player, said game apparatus comprising:

a. a board having first discrete areas of a first color and second discrete areas of a second color different from said first color, said first and second discrete areas being arrayed in chessboard pattern, said board having window means associated with each of said first and second discrete areas;

b. dial means mounted on said board in association with each of said first and second discrete areas, said dial means including

i. shaft means extending below said board,

ii. first disc means mounted below said board on said shaft means for rotation therewith, said first disc means having a first player identifying feature and a second player identifying feature located in spaced relationship on said first disc means,

iii. second disc means mounted below said board on said shaft means for rotation therewith, said second disc means having six player piece identifying features located in spaced relationship on said second disc means, and

iv. third disc means mounted below said board on said shaft means for rotation therewith, said third disc means having a blank identifying feature and a transparent portion located thereon, said blank identifying feature denoting that a discrete area is unoccupied, said first, second, and third disc means being selectively positionable with respect to said window means in order that said window displays the state of occupation of said area; and

c. first stop means for stopping said third disc means at a predetermined position such that said transparent portion of said third disc means is in registry with said window means.

4,062,547
AUTOMATIC CONTROL FOR PHONOGRAPHS PLAYING RECORDS OF DIFFERENT SPEEDS
Louis Dorren, San Mateo, Calif., assignor to Quadracast Systems, Inc., San Mateo, Calif.
Filed Aug. 13, 1976, Ser. No. 714,033
Int. Cl.² G11B *19/26*
U.S. Cl. 274—9 A **6 Claims**

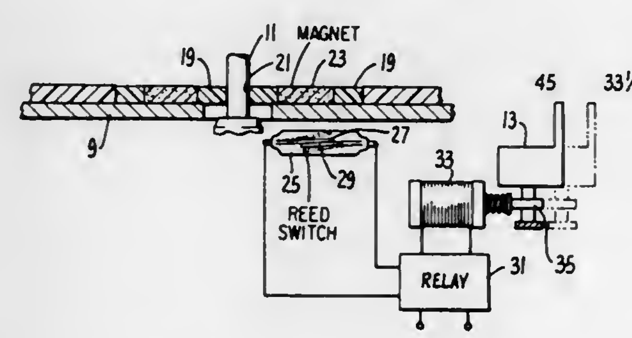

1. In a phonograph record player having the usual turntable with a small diameter spindle and having a first mode for playing a first type of record having a small spindle hole at a first speed, and a second mode for playing a second type of record at a second speed, said second type of record having a large spindle hole and requiring an adapter to adapt the record to said small diameter spindle, said player having a lever for switching said player from the first mode to the second mode, the improvement comprising:

a. an annular adapter having an outer diameter to fit said large spindle hole and an inner diameter to fit said small diameter spindle for said second type of record and having magnetic means incorporated therein;

b. magnet detecting means in said player;

c. switching means activated by said magnet detecting means adapted to switch said lever from one mode to the other, depending on the position of said adapter with respect to said magnet detecting means.

4,062,548
PICKUP ARM LIFTING DEVICE
Akira Kagata, Neyagawa, Japan, assignor to Matsushita Electric Industrial Co., Ltd., Japan
Filed Mar. 17, 1976, Ser. No. 667,559
Claims priority, application Japan, Mar. 20, 1975, 50-34130
Int. Cl.² G11B *3/10*
U.S. Cl. 274—23 B **11 Claims**

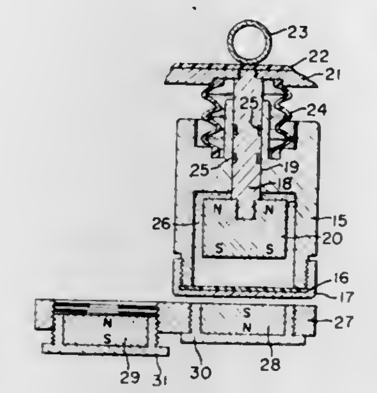

1. A pickup arm lifting device comprising a slide shaft disposed for vertical movementgfor lifting or lowering a pickup arm, a follower permanent magnet attached to said slide shaft, a driving means for generating a magnetic field in the vicinity of said follower magnet to apply a driving force to said follower magnet, and means for mechanically positioning said driving means relative to said magnet to change the magnitude of said driving force which causes the vertical movement of said slide shaft by magnetic force acting between said driving means and said follower magnet.

4,062,549
SELF-COMPENSATING ROTARY SEAL FOR VERTICAL DRIVE SHAFT
Dennis E. Kemp, Jr., Maplewood, N.J., assignor to Application Dynamics, Inc., South Orange, N.J.
Continuation-in-part of Ser. No. 662,277, Feb. 27, 1976, Pat. No. 3,988,026. This application Sept. 24, 1976, Ser. No. 726,149
Int. Cl.² F16J *15/34*
U.S. Cl. 277—12 **8 Claims**

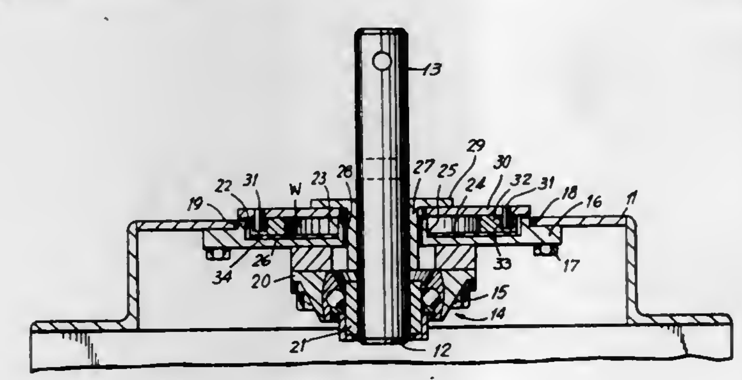

1. A low pressure, self-compensating rotary seal assembly for a vertical drive shaft comprising a mounting plate member adapted to be maintained in generally horizontal disposition, said plate having a vertically directed central aperture for the passage therethrough of of said drive shaft, a depending annular well member formed in said plate surrounding and concentric with said aperture, said well member including an inner upstanding cylindrical wall portion adjacent said shaft and an outer cylindrical upstanding wall portion radially outwardly spaced from said inner wall portion, a collar member adapted to be keyed to said shaft extending downwardly through said aperture, an anti-friction washer member disposed in said well between said cylindrical wall portions and defining a floor of said well, the uppermost face of said washer being disposed in a plane normal to the axis of said shaft, a cylindrical thrust washer disposed within said well, said washer being formed of high density metal and including a lower planar face portion biased against said uppermost face of said antifriction washer under gravitational influences, an annular flange portion extending from said collar and overlying said well, and drive means coupling said thrust washer to said flange portion for conjoint rotation, said drive means permitting a range of vertical relative movement between said collar and thrust washer whereby said thrust and antifriction washers are maintained in emgagement under gravitational influences notwithstanding wear.

4,062,550
SEAL ASSEMBLY WITH BACKUP RING
Kazuyoshi Satsumabayashi, Nagaokakyo; Akira Yoshihashi, Hirakata; Takeshi Kato, Hirakata, and Osamu Omote, Hirakata, all of Japan, assignors to Kabushiki Kaisha Komatsu Seisakusho, Toyko, Japan
Filed Sept. 17, 1976, Ser. No. 724,748
Claims priority, application Japan, Sept. 17, 1975, 50-126900[U]
Int. Cl.² B62D *55/20*
U.S. Cl. 277—92 **6 Claims**

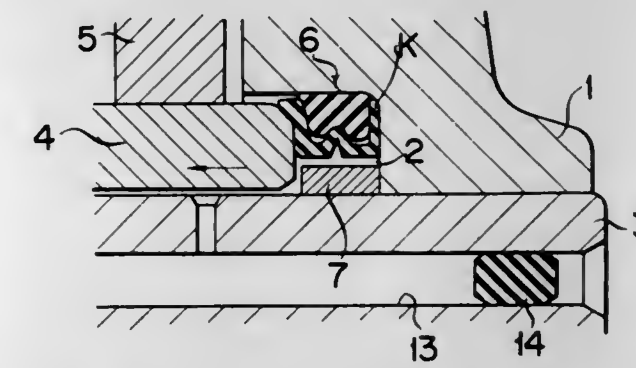

1. A seal assembly comprising first and second axially spaced members mounted for relative rotation about a common axis, the first member having a counterbore formed in one face, the second member having an end face opposite the counterbore;

a seal ring of tough abrasion-resistant material having a W-shaped configuration in cross section disposed within the counterbore defining an annular groove facing the side wall of the counterbore, said seal ring including a driving flange engaged in non-rotative driving contact relationship with the side wall and end wall of the counterbore at the juncture of these walls, a sealing flange adapted to be engaged in annular face sealing rotative contact relationship with the end face of the second member, said seal ring also having an intermediate section connecting flanges, the intermediate section of said seal ring being outwardly projected to form the seal ring in W-shaped configuration with the flanges; and a backup ring of elastomeric material having substantial resiliency characteristics, said backup ring being disposed within the annular groove of said W-shaped seal ring spaced substantially from the intermediate section of said seal ring so as to define and enclosed space between said backup ring and said seal ring, said backup ring being axially compressed between the driving flange and the sealing flange, whereas the load exerted on the seal flange face is the sum of the compression force of said backup ring and said seal ring and an internal pressure developed in the enclosed space.

4,062,551
CABLE SEAL UNIT FOR EARTH-BORING DRILL STRINGS
Jim Base, 41 Eastern Avenue, Caister-on-Sea, Norfolk, England
Filed Dec. 5, 1975, Ser. No. 638,278
Int. Cl.² F16J *15/06*
U.S. Cl. 277—102 **8 Claims**

1. A cable seal unit for coupling a cable to an earth-boring drill string, said unit comprising a cylindrical shell having an axially oriented hollow interior, said shell having opposed, coaxially aligned end portions, one of which is internally

threaded and the other of which is externally threaded, for fitting said shell intermediate two adjacent pipe sections in a drill string so that the shell forms a substantially continuous assembly with the string, a wall of said shell having an aperture inclined at an acute angle to the shell axis, through which aperture a cable may pass from the interior to the exterior of the shell, sealing means for sealing the aperture around the cable, said shell having an external recess communicating with said aperture, and means adjacent said recess for securing to

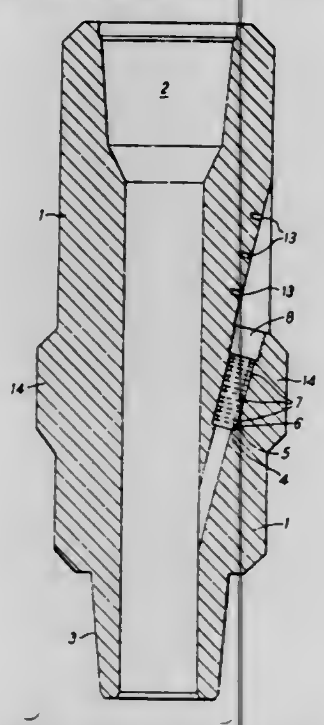

said shell a cable clamp which may surround said cable and be disposed in said recess; and wherein the interior end of the aperture is of smaller diameter than the remainder, thus defining a shoulder at the interface, said unit further comprising an annular packing seat positioned against said shoulder, and wherein said sealing means comprises a packing material which is compressed against the packing seat; and further including a cable clamp which is attachable to the shell wall by said securing means.

4,062,552
TOOL-HOLDER CHUCK
Ryoichi Kitaguchi, Higashiosaka, Japan, assignor to Daishowa Seiki Co., Ltd., Higashiosaka, Japan
Filed Jan. 13, 1977, Ser. No. 759,176
Int. Cl.^{2} **B23B** *5/22*
U.S. Cl. 279—1 TS **6 Claims**

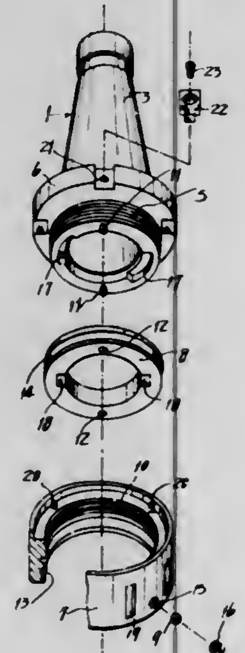

1. A tool-holder chuck comprising a body (1) provided with a tapered bore (4) for receiving therein a taper spindle (25) of a tool holder (24) and a ring-shaped clamp (2) threaded coaxially to said body at the entrance of said bore, said clamp having a coaxial pressing surface (29) to push projections (26) of said tool holder inward, in the coaxial direction, said clamp including a nut (7) attached to a threaded portion (5) of said body, a clamp ring (8) movable only in the coxaial direction against said body, said ring having therein coaxial notches (18) to lead said projections to said coaxial pressing surface, and a plurality of rolling members (9) which transmit at least the coaxial movement of said nut to said ring when said nut is screwed, and can rotate in the circumferential direction, said ring with said notches leading said projections and said coaxial pressing surface.

4,062,553
DEVICE FOR SECURING A PAIR OF SKIS TOGETHER
Tilo Riedel, Eching, Germany, assignor to S.A. Etablissements Francois Salomon & Fils, Annecy, France
Continuation-in-part of Ser. No. 557,476, March 12, 1975, Pat. No. 3,989,271. This application Mar. 10, 1976, Ser. No. 665,373
Claims priority, application Germany, Mar. 15, 1974, 2412623; July 26, 1974, 2436155; Feb. 20, 1975, 2507371
Int. Cl.^{2} **A63C** *11/02*
U.S. Cl. 280—11.37 A **14 Claims**

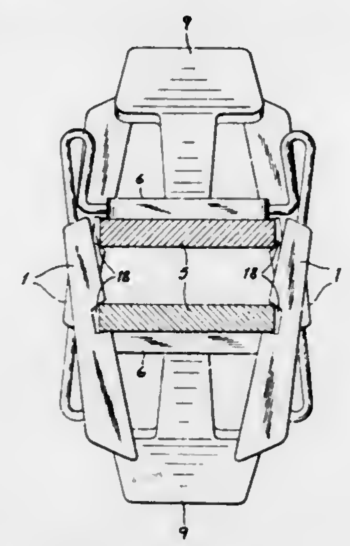

1. A device for securing the skies of a pair together, each of said skis having a pair of longitudinal edges, comprising:
a ski brake mounted on one of said ski and including an actuator, a brake element in the form of an elongated blade operatively connected with said actuator for displacement thereby into a position wherein said blade element extends athwart a longitudinal edge of said one of said skis, and spring means biasing said actuator and said brake element into said operative position; and
a notch formed along an inner edge of said blade and adapted to receive the longitudinal edge of the other ski when said skis are position in runner-to-runner relationship and said ski brake is in its operative position.

4,062,554
SKI STICK
Heinz Korger, Munich, Germany, assignor to Hannes Marker, Garmisch-Partenkirchen, Germany
Filed Mar. 11, 1976, Ser. No. 665,877
Claims priority, application Germany, Mar. 11, 1975, 2510608
Int. Cl.^{2} **A63C** *11/22*
U.S. Cl. 280—11.37 D **7 Claims**

1. A ski stick comprising a tubular shank having a tip at one end, gripping means comprising a handle mounted adjacent the other end of said tubular shank, impact surface means positioned above the gripping means for diverting forces from being exerted solely along the tubular shank direction, said impact surface means comprising an elongated extension, said elongated extension extending from the end of the handle

remote from the tip of the tubular shaft, and angularly disposed at an acute angle relative to the handle and relative to the

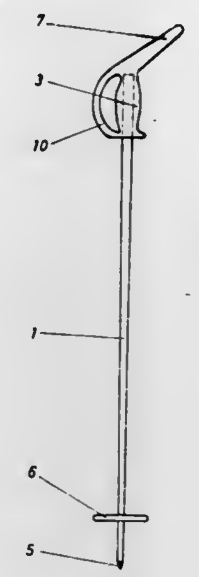

longitudinal axis of said tubular shank, said elongated extension having a length at least the same length as the handle.

4,062,555
STRUCTURE FOR FOLDABLE BABY CARRIAGE
Luke Shih-Cheng Peng, No. 30-1, Lane 350, Wu Hsing St., and Herbert Chia-Chen Yu, No. 2-4, Alley 12, Lane 118, Jen Ai Road, Sec. 3, both of Taipei, China /Taiwan
Filed Nov. 2, 1976, Ser. No. 738,126
Int. Cl.^{2} **B62B** *11/00*
U.S. Cl. 280—42 **6 Claims**

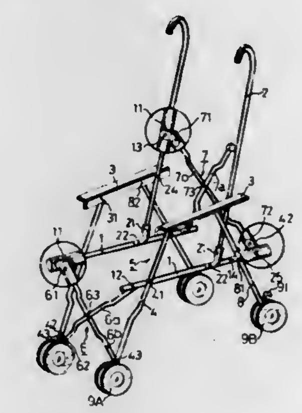

1. Structure for foldable baby carriage comprising and characterized by:
a pair of four bar linkages each having,
a seat tube,
a back tube with its lower end connected to a rear portion of the said seat tube and its upper end extending upward,
an arm rest member with its rear end pivoted to a middle portion of the said back tube and its front end extending forward, and
a front leg extending downward with its upper end pivoted to the front end of the said arm rest and its middle portion pivoted to a front portion of the said seat tube;
two cross frames, one of them with its upper ends pivoted to the front ends of the seat tubes and the lower ends pivoted to the lower portions of the front legs, and the other with its lower ends pivoted to the rear ends of the seat tubes and its upper ends to the back tubes above said arm rest;
two rear legs extending downward each with its upper end pivoted to the middle portion of the arm rest and its middle portion passing through a sliding sleeve pivoted to the said seat tube between the rear end thereof and the lower end of said back tube; and
two pairs of twin type wheel sets respectively provided under front end rear legs.

4,062,556
COLLAPSIBLE CART
Donald H. Evans, Swansea, Wales, assignor to Apex Packaging Co. (Swansea) Limited, Swansea, Wales
Continuation-in-part of Ser. No. 574,635, May 5, 1975, abandoned. This application Mar. 31, 1976, Ser. No. 672,165
Int. Cl.^{2} **B62D** *53/06*
U.S. Cl. 280—79.2 **2 Claims**

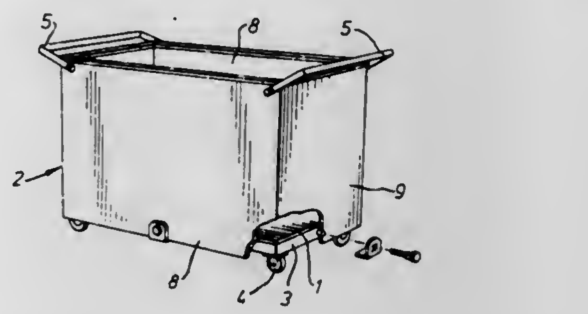

1. A collapsible load handling trolley comprising a box-like receptacle formed by a sleeve and base of corrugated fibreboard, the sleeve being formed with creases which delimit four wall portions and which render the sleeve capable of being folded flat and the base being dimensioned to fit snugly within the sleeve, a frame for supporting the base and to which the base is secured, the arrangement being such that the frame defines a peripheral flange which is overlaid by a lower portion of the sleeve, a set of ground engaging castors mounted to depend from the frame, and means for releasably securing the sleeve to the frame at said flange and said lower portion of the sleeve, the securing means comprising bolts passing through apertures formed in the frame and the sleeve, load spreading members arranged on the bolts and shaped to engage the lower portions of the walls of the sleeve and the lower edge of the sleeve, and wing nuts on the bolts.

4,062,557
EIGHT WHEEL SKATEBOARD
Harry F. Roden, 3863 Motor Ave., Culver City, Calif. 90230
Filed Aug. 19, 1976, Ser. No. 715,877
Int. Cl.^{2} **A63C** *17/00*
U.S. Cl. 280—87.04 A **3 Claims**

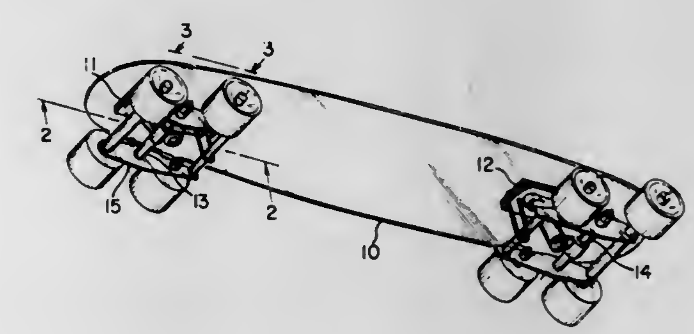

1. An eight-wheel skateboard having front and rear under carriage structures supporting front and rear axles; and front and rear wheel trucks, each of said wheel trucks comprising a rectangular frame including longitudinal and transverse sides, and having four wheels rotatably mounted adjacent to its four corners, respectively, an intermediate point of each of the longitudinal sides of said rectangular frame being pivoted to the axle of an associated under carriage for rocking movement; and, stop means secured to the front and rear under carriage structures and passing over the innermost transverse sides of the rectangular frames to limit the rocking movement of the trucks to a given degree.

4,062,558
UNICYCLE
David Wasserman, 1926 Cole Drive, East Meadow, N.Y. 11554
Filed July 19, 1976, Ser. No. 706,227
Int. Cl.² B62K *1/00*
U.S. Cl. 280—205 **5 Claims**

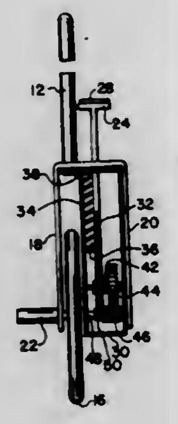

1. A unicycle comprising a yoke, said yoke having a pair of arms, a wheel, a pole, said wheel having an axle, said axle being journalled to the arms of said yoke, said pole having one end thereof fixedly secured to said yoke, the longitudinal axis of said pole extending at right angles to the longitudinal axis of said axle, a platform, said platform residing in a plane, said plane being maintained perpendicular to said longitudinal axis of said pole, a shaft, said shaft having one end thereof fixedly secured to one of said pair of arms and extending outwardly therefrom, means to slidably support said platform along a line, said line being disposed parallel to said longitudinal axis of said pole, means to rotate said wheel when said platform is displaced along said line, said means to rotate including a rod, a rack, one end of said rod being fixedly secured to said platform, the other end of said rod being fixedly secured to one end of said rack, a gear train, said gear train having an input gear and and an output gear, the teeth of said input gear meshingly engaging the teeth of said rack, a pinion, said pinion fixedly secured and co-axially aligned with said axle, the teeth of said output gear meshingly engaging the teeth of said pinion. and means to bias said platform in a furthestmost position from said axle.

4,062,559
PAVER ATTACHMENT HITCH
Abram Peters, Belmont, Canada, assignor to Allatt Limited, Downsview, Canada
Filed Sept. 3, 1976, Ser. No. 720,497
Int. Cl.² B60D *1/00*
U.S. Cl. 280—460 R **12 Claims**

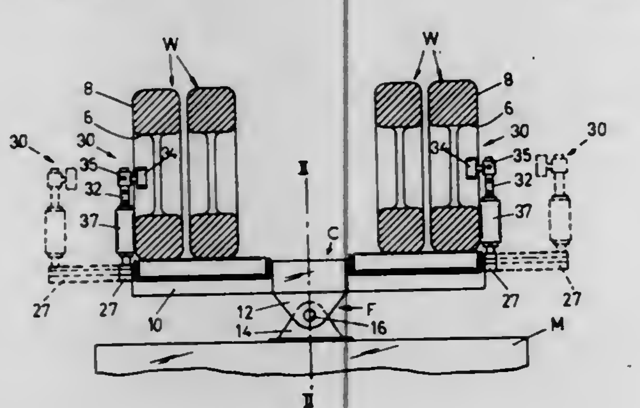

1. Apparatus for effecting a push-pull driving connection between a pair of vehicles disposed in tandem relation with one end of each said vehicle juxtaposed relative to the other, comprising;

a rocking beam pivotably mountable on the juxtaposed end of one said vehicle for pivotal movement thereon in a horizontal plane;

bumper rollers carried by and projecting from said rocking beam in axially horizontal orientation for rolling engagement with the proximal wheels of said other vehicle whereby movement of one vehicle towards the other will procure engagement of the bumper rollers with the wheels as aforesaid, and, upon continuation of such movement in the same general direction, will transmit a pushing action to said other vehicle through the engagement of said bumper rollers with the said wheels;

beam extenders in opposed relation to each other carried by said rocking beam for movement laterally of said rocking beam;

a coupling arm projecting from each said beam extender for hooking engagement with a said proximal wheel;

each said beam extender being movable between a retracted position in which the coupling arm carried thereby is disposed in engagement with a said proximal wheel and a neutral position in which said arm is disengaged and spaced from said wheel; and,

a spacer interconnecting said beam extenders and operable to extend said arms into neutral position, and, thereafter, to retract them into pulling engagement with said wheels and to releasably maintain them at a fixed separation;

said spacer being floating relative to said rocking beam for permitting lateral shifting of said beam extenders and coupling arms on said rocking beam in unison with each other and with the spacer without disengagement of said arms from said wheels while said beam extenders are in their retracted position.

4,062,560
HITCH LINK ASSEMBLY
Otto Mueller, Jr., Detroit, and Dale A. Wood, Canton, both of Mich., assignors to Massey-Ferguson Inc., Detroit, Mich.
Filed Aug. 4, 1976, Ser. No. 711,342
Int. Cl.² B60D *1/00*
U.S. Cl. 280—478 R **9 Claims**

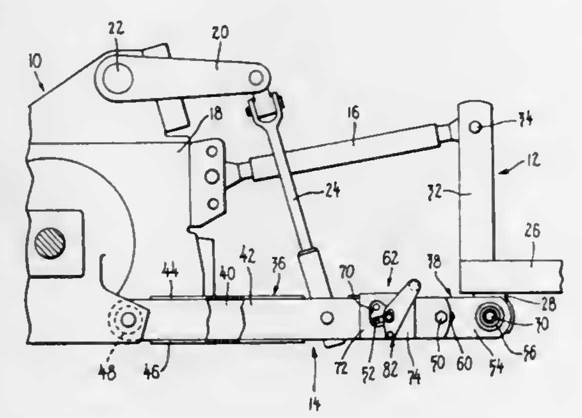

1. A hitch link assembly for connecting an implement (12) to a tractor (10) characterized by the provision of:

a forward link construction (36);

a rear link construction (38) having a forward projection (58);

mounting means (50, 60) for mounting the rear link construction on the forward link construction for reciprocal movement between a rearward position and a forward position and for pivotal movement from a generally horizontal position to an angled position when the rear link construction is in its rearward position, said rear link construction (38) being in its normal working position when in its rearward and generally horizontal position; and

engaging means (58, 62, 84, 110, 116) operable to firmly hold said rear link construction in its normal working position, the engaging means being engageable with upper and lower surfaces (110, 116) of the forward projection (58) of the rear link construction (38) to firmly hold the rear link construction from pivotal movement when it is in its normal working position, said engaging means further including latching means (62) having transversely extending pin means (68) moveable in an upward and rearward direction into contact with said lower surface (116).

4,062,561
SKI BRAKE
Karl Altenburger, Rue de Veraie 4, Montreux-Territet, Switzerland
Filed Mar. 29, 1976, Ser. No. 671,503
Claims priority, application Germany, Jan. 12, 1976, 2600850
Int. Cl.² A63C *7/10*
U.S. Cl. 280—605 **14 Claims**

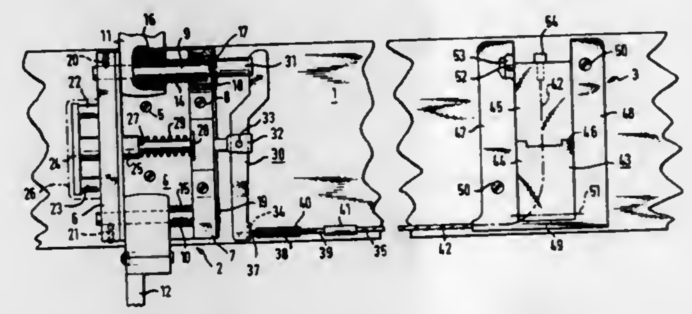

1. A brake mechanism for skis having a running surface, comprising two brake vanes, means pivotably mounting said brake vanes for movement from a position above the running surface of the ski downwardly into a ski braking position, spring means acting upon said brake vanes to bias said vanes into the ski braking position, and latching means for holding the brake vanes in an arrested position for storage and transport of the skis and in a preparatory position when the skier's ski boot is secured to the ski, said latching means comprising for each brake vane a bushing, said bushing being beveled at its end, each brake vane having a bore for receiving the bushing, a spring biasing the bushing, each said bushing being urgable against the force of the spring towards the base of the bore of the associated brake vane, a bolt provided for each bushing, a yoke interconnecting said bolts, a first web extending transversely across the ski, each bolt possessing a tapered end of lesser diameter than the inner diameter of the bushings and arranged to be axially displaceable in said first web in alignment with the associated bushing, said first web being provided with bores for receiving the bushings in the arrested position of the ski brake and for taking-up the bolts, control means for the ski brake, the brake vanes in the preparatory position having the bushings forwardly displaced out of the first web against the action of the control means such that the bolts enter the bushings, push such out of the bores of the first web and fixedly hold such in an eccentric position with regard to the axes of the bolts, said yoke interconnecting the bolts being connected between the bolts to a traction rod extending in the lengthwise direction of the ski, said traction rod having a free end, a lever having an intermediate portion, means for supporting the lever at one end, means for pivotably connecting the intermediate portion of the lever to the free end of the traction rod, a traction element extending along a side edge of the ski with which there is connected the other end of the lever, said traction element being shiftable in its lengthwise direction by the control means which can be activated by the ski boot.

4,062,562
SKI BRAKE WITH STIRRUP-SHAPED SPRING WIRE AND STRETCHER THEREFOR
Tilo Riedel, Eching, Germany, assignor to S.A. Etablissements Francois Salomon & Fils, Annecy, France
Continuation-in-part of Ser. No. 557,476, March 12, 1975, Pat. No. 3,989,271. This application Mar. 10, 1976, Ser. No. 665,515
Claims priority, application Germany, Mar. 15, 1974, 2412623; July 26, 1974, 2436155; Feb. 20, 1975, 2507371
Int. Cl.² A63C *7/10*
U.S. Cl. 280—605 **11 Claims**

1. A ski brake for preventing free flight of a ski upon the release thereof from a ski boot, e.g. upon the falling of a skier, comprising:

a mounting plate on the upper surface of said ski;

a stirrup-shaped bent spring wire mounted on said plate upon the upper surface of the ski for swinging movement between an inoperative position wherein a bight of said wire lies substantially along said surface and an operative position wherein said bight is upstanding from said surface;

at least one brake element mounted on said spring wire and adapted to swing from a position wherein it lies along a longitudinal edge of the ski into a position in which it projects below a running face of the ski upon movement

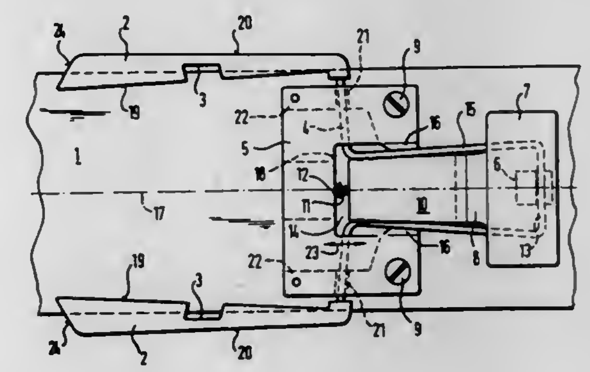

of said bight between said inoperative position and said operative position; and

stretching means on said ski for stretching said bight upon the movement thereof between said operative position and said inoperative position, thereby drawing said brake element inwardly toward the longitudinal center line of the ski, said stretching means comprising a treadle mounted on said ski and engaging said bight, said treadle comprising a pair of articulated angularly adjoining members, one of said members engaging said bight, the other of said members bearing upon said plate, said treadle being flattenable upon the pressing of a ski boot thereagainst to stretch said bight by displacing the crosspiece of said bight away from said plate.

4,062,563
SKI BINDING
Walter Manfreda, Bahnhofstrasse, Seefeld, Tyrol, Austria
Filed Jan. 11, 1977, Ser. No. 758,504
Int. Cl.² A63C *9/08*
U.S. Cl. 280—625 **15 Claims**

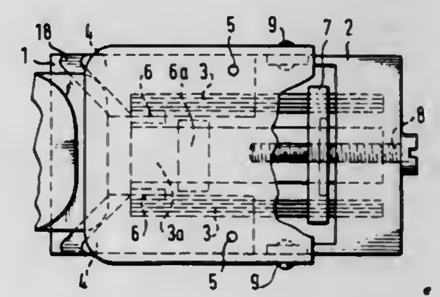

1. A ski binding comprising a support for attachment to a ski, at least one ski-boot clamp on said support movable from a boot-clamping to a boot-releasing position, a leaf spring having one end disposed in the clamp, and means on said support holding the other end of the spring, said spring normally holding the clamp in said clamping position but yielding to a force sufficient to cause the spring to bend to permit the clamp to be moved out to said boot-releasing position, and said spring being curved transversely with its concave side facing in the direction of the counter force that the spring exerts on the clamp resisting movement of the clamp toward said releasing position.

4,062,564
COLLAPSIBLE GOLF CART
Werner K. Schimmeyer, 4889 Arboretum Drive, Los Altos, Calif. 94022
Filed Nov. 26, 1976, Ser. No. 745,100
Int. Cl.^{2} B62B *1/20*
U.S. Cl. 280—652 6 Claims

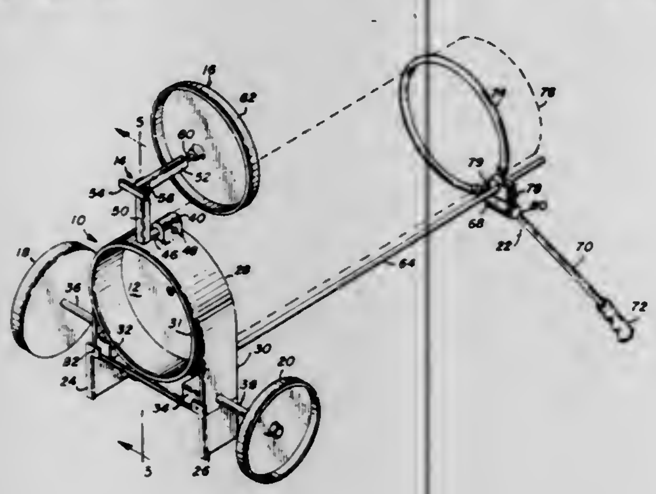

1. A collapsible golf cart comprising:
first and second removably mounted wheels;
a base member having a front portion and a rear portion, the rearward part of said back portion being rounded to generally conform to the base of a golf bag and having a bag supporting upper surface and a lower surface forming a recess of suitable dimensions for receiving said wheels, said front portion having a first axle receiving bore extending into one side thereof and a second axle receiving bore extending into the other side thereof;
means for retaining said wheels in said recess when they are received therewithin;
handle forming means affixed to said front portion; and
first and second shafts respectively disposed in said first and second bores, each said shaft being movable between a retracted position and an extended position, the distal ends of each said shaft being adapted to receive one of said wheels, whereby when said cart is in its collapsed configuration said wheels are disposed within said recess and said shafts are in their retracted positions, and when said cart is in its operative configuration said shafts are in their extended positions and said wheels are respectively mounted to the distal ends thereof.

4,062,565
COLLAPSIBLE BAGGAGE CART
Gilbert J. Holtz, 182 Tibbetts Road, Yonkers, N.Y. 10705
Filed Nov. 1, 1976, Ser. No. 737,202
Int. Cl.^{2} B62B *1/12*
U.S. Cl. 280—655 6 Claims

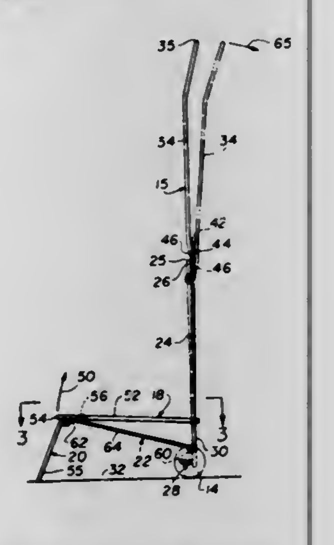

1. A cart for baggage, comprising
A. a main frame including
1. spaced apart vertically extending elements,
2. an upper cross-element for connecting said elements at the upper end thereof,
3. a lower cross-element for connecting said elements at the lower end thereof,
B. laterally spaced wheels rotatably mounted at the lower end of said main frame outwardly of each of said vertically extending elements for movement of the cart along a supporting surface,
C. a handle adapted to be gripped by the user of the cart, said handle including a pair of spaced apart elongated resilient arms, each of said arms terminating in a free end, said arms adapted to have said free end of each said arm inwardly disposed,
D. mounting means for obtaining releasable interlocking relationship of said handle in either a stable position extending upwardly from said main frame in readiness for use or in a collapsed position in which said handle and said main frame are relatively positionable in substantially contiguous planes, said mounting means comprising
1. a pair of vertically oriented members inwardly disposed of each of said elements and connected to said upper and lower cross-elements,
2. each of said members terminating in an inwardly disposed catch extending above said upper cross-element,
3. a first cross-member mounted between said members below said upper cross-element, said free end of each said arms pivotally mounted on said first cross-member, such that in said stable position each said arm extends vertically between a respective catch and said upper cross-element to prevent pivotal movement, and inwardly positioning of each of said arms on said first cross-member beyond said catches permits said handle to be pivotally moved to said collapsed position,
E. a lower frame articulately connected to said main frame for movement relative thereto between a closed position substantially coplanar with said main frame to an open position where said lower frame projects forwardly from said main frame for supporting baggage thereon,
F. an auxiliary frame articulately connected to said lower frame for movement relative thereto between a closed position wherein said auxiliary frame projects downwardly from said lower frame and being engageable with the supporting surface, and
G. linkage means for simultaneously moving said auxiliary frame in unison with said lower frame between said open and closed positions.

4,062,566
PASSENGER MOTOR VEHICLE
Paul Hensler, Stuttgart, and Hermann Burst, Rutesheim, both of Germany, assignors to Firma Dr. -Ing. H.c.F. Porsche AG, Germany
Filed Mar. 12, 1976, Ser. No. 666,420
Claims priority, application Germany, Mar. 12, 1975, 2510725
Int. Cl.^{2} B60R *21/10*
U.S. Cl. 280—751 22 Claims

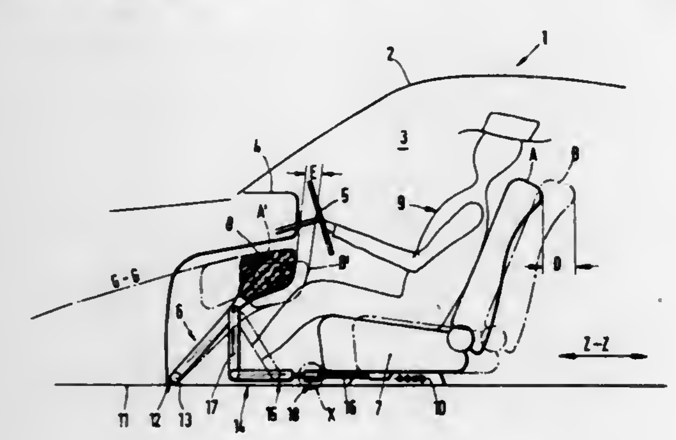

1. Passenger vehicle apparatus comprising:
an adjustable movable passenger seat;

a knee support arranged in facing spaced relationship with respect to said passenger seat,
and interconnecting means interposed between said passenger seat and said knee support for automatically adjustably moving said knee support relative to said seat in response to adjusting movement of said passenger seat.

4,062,567
DUAL SYSTEM CARBONLESS PAPER
Norman Macaulay, Tonawanda, N.Y., assignor to Moore Business Forms, Inc., Niagara Falls, N.Y.
Filed May 3, 1974, Ser. No. 466,910
Int. Cl.^{2} B41L *1/20*
U.S. Cl. 282—27.5 9 Claims

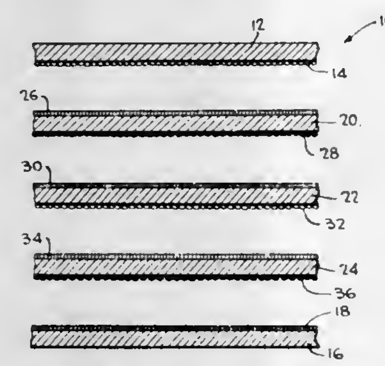

4. A manifolded set of carbonless recording sheets comprising:
a top sheet having a back coating thereon;
a bottom sheet having a front coating thereon; and
at least two intermediate sheets having both a front coating and a back coating thereon disposed between said top and bottom sheets,
said sheets being collated such that each of said back coatings is disposed in overlying and contacting relationship with respect to the front coating of the next adjacent sheet of the set,
each of said coatings including a color forming reactive material,
the reactive material in the back coating of said top sheet comprises a first initially colorless reactive component of a first initially colorless reaction system;
the reactive material in the front coating of a first one of said intermediate sheets which is next adjacent to said first sheet comprises a second initially colorless reactive component of said first reaction system, said first and second reactive components of said first reaction system being reactable when brought into contact with one another to produce a coloed mark;
the reactive material in the back coating of said first intermediate sheet comprises a first initially colorless reactive component of a second initially colorless reaction system; and
the reactive material in the front coating of a second one of said intermediate sheets which is next adjacent to said first intermediate sheet comprises a second initially colorless reactive component of said second reaction system, said first and second reactive components of said second reaction system being reactable when brought into contact with one another to produce a colored mark,
the reactive material in the back coating of said second intermediate sheet comprises said first reactive component of said first reaction system,
said first component of the first system being incapable of reacting with the second component of the second system to produce a colored mark and said first component of the second system being incapable of reacting with the second component of the first system to produce a colored mark,
the reactive material in the front coating of said bottom sheet comprises both of said second components and is reactive with the reactive material in the back coating of any of the other sheets of the stacked set to produce a colored mark when pressed thereagainst.

4,062,568
METHOD AND MEANS FOR TRANSCRIBING MEDICAL TEST DATA
Robert D. Schrantz, and Janice R. Johnson, both of P.O. Box F, Ottumwa, Iowa 52501
Filed July 14, 1975, Ser. No. 595,522
Int. Cl.^{2} B42D *11/00, 12/00, 15/00*
U.S. Cl. 283—66 R 6 Claims

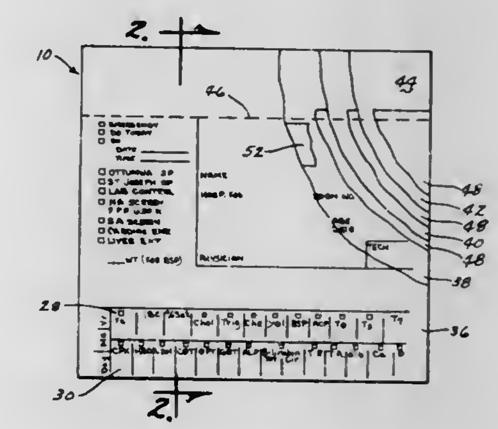

1. A method for transcribing medical test data from a test result printout, said test result printout having a column of equally spaced indicia, each of said indicia including a patient identifying indicia and a test result indicia, said method comprising:
placing said test result printout on a work sheet having a grid thereon comprising a plurality of vertical columns each of which corresponds to a different test and a plurality of horizontal rows each of which corresponds to a different patient, said rows being sized and spaced to register with said column of indicia on said test result printout;
aligning said patient identifying indicia with said horizontal rows so that said patient identifying indicia are registered with the rows corresponding to the patient they identify;
aligning said test result indicia beside the one column corresponding to the test represented by said test result indicia;
transcribing the test result indicia from said printout to said one column;
aligning a plurality of test result printouts in a similar fashion beside the columns corresponding to the test results thereon and
transcribing said test result indicia from said printouts to said columns whereby each horizontal row will reflect the test result indicia for various tests run for one patient;
overlaying a data slip on said work sheet, said data slip having a horizontal row of boxes sized and spaced to register with a first group of said columns on said work sheet;
positioning said data slip on said work sheet so that a row of boxes is adjacent one of said horizontal rows and registered with said group of columns; and
transcribing the indicia in both said one horizontal row and in said group of columns to said boxes of said data slip.

4,062,569
PIPE JOINTS
Francis Xavier Kay, 30 Sheep St., Winslow, Bucks., England
Filed Mar. 23, 1976, Ser. No. 669,448
Claims priority, application United Kingdom, Mar. 24, 1975, 12285/75
Int. Cl.^{2} F16L *35/00*
U.S. Cl. 285—4 10 Claims

1. A pipe connector unit comprised of a block bounded by planar side faces,

a. said side faces including a first pair of opposed parallel side faces,
b. each side face of said first pair being formed with a blind coupling port, said block including two knock-out diaphragms normally sealing said coupling ports,
c. said side faces further including a pair of other side faces each formed with a pipe-receiving port,

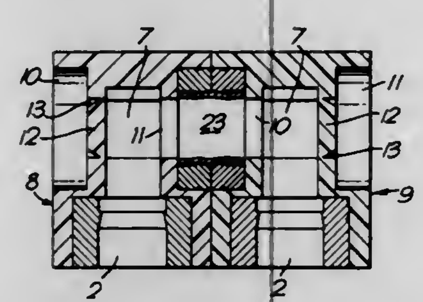

d. said block being formed with an internal passage interconnecting said pipe-receiving ports and bounded by said diaphragms, whereby said coupling ports are in communication with said internal passage when said diaphragms are knocked out.

4,062,570
MANDREL FOR EXPLOSIVE WELDING TUBULAR MEMBERS
Wayne Richard Wilson, Bath, and William James Kirkpatrick, Kingston, both of Canada, assignors to Alcan Research and Development Limited, Montreal, Canada
Division of Ser. No. 478,158, June 10, 1974, Pat. No. 3,985,279. This application Aug. 2, 1976, Ser. No. 710,781
Claims priority, application Canada, June 13, 1973, 173964
Int. Cl.² F16L *13/02;* B23K *5/22*
U.S. Cl. 285—22 **3 Claims**

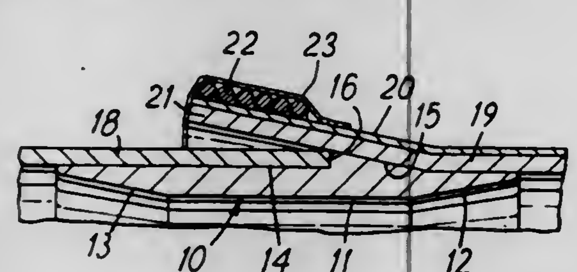

1. A self-aligning permanent backup mandrel for use in welding together the ends of two tubular metal members for fluid flow,

by explosion welding, said mandrel consisting of an integral, single, fluid-conducting tubular member having an outer face defining a single cylindrical portion for insertion in one end of a first tubular member and a single axially adjacent truncated conical portion for insertion in the opposed end of a second tubular member, the maximum diameter of said conical portion being greater than the diameter of the cylindrical portion, and an annular shoulder extending outwardly between the cylindrical surface and the end of the conical portion of maximum diameter with the conical portion tapering inwardly away from said shoulder, said shoulder being perpendicular to the axis of the mandrel and having a height equal to the wall thickness of said first tubular member, said conical portion tapering at an angle of about 5° to 30° relative to the axis of the mandrel, said cylindrical and conical portions being mutually shaped and disposed so that when the conical portion is fitted into the second tubular member, with said second tubular member flared outwardly at an angle confirming to the conical portion and to a flared open end portion of greater diameter than the aforesaid maximum diameter, the said flared end portion overlies the first tubular member when the first member is placed on the cylindrical portion so that the said flared end portion can be explosively pressed and welded against said first tubular member.

4,062,571
RAPIDLY CONNECTABLE AND DISCONNECTABLE PIPE UNION
Hubert Sicard, Marseilles, France, assignor to Compagnie Maritime d'Expertises - Comex, Marseilles, France
Filed May 20, 1976, Ser. No. 688,316
Claims priority, application France, May 30, 1975, 75.17356
Int. Cl.² F16L *35/00*
U.S. Cl. 285—26 **8 Claims**

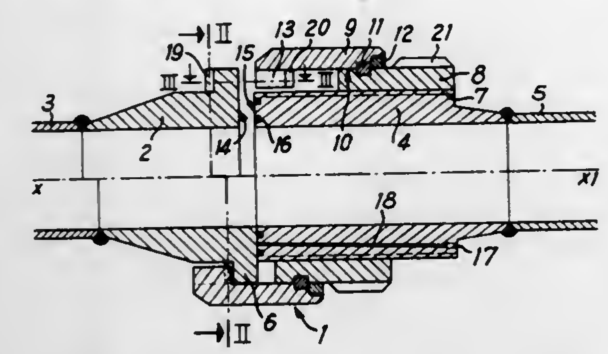

1. A rapidly connectable and disconnectable pipe union for connecting pipes in end to end relation comprising a bush secured to a pipe end and having a radially notched outer peripheral flange including a plurality of radially outwardly extending teeth; an externally threaded union body secured to the end of another pipe; a nut threadedly engaged with said union body, a sliding sleeve receiving a portion of said nut and surrounding a portion of said union body, and means for connecting said sliding sleeve to said nut for longitudinal movement therewith while permitting free relative rotation therebetween; said sliding sleeve having an externally extending toothed rib formed therein comprising a plurality of radially inwardly extending teeth having notches formed therebetween whereby said teeth on said rib may be inserted through the notches on said flange and the slide rotated to position said rib teeth behind said flange teeth for tight clamping engagement with each other upon rotation of said nut in a direction to move the nut and slide along the union body away from said bush.

4,062,572
TRANSITION FITTINGS
George W. Davis, Warren, N.J., assignor to Inner-Tite, a division of Yara Engineering Corporation, Springfield, N.J.
Filed Aug. 30, 1976, Ser. No. 718,878
Int. Cl.² F16L *9/14*
U.S. Cl. 285—55 **10 Claims**

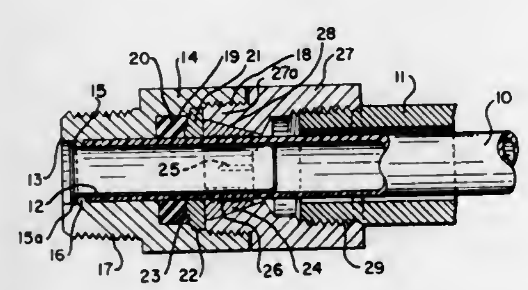

1. A transition fitting comprising in combination a pressure deformable plastic conduit, rigid sleeve means inserted in one end of said plastic conduit in circumferential contact therewith, a pressure deformable rubbery resilient member extending around the conduit and sleeve in contact with said conduit, compression ring means extending around the conduit and sleeve having a radial face abutting one face of the resilient member and applying compressive pressure thereon, a radially expandable and contractible frusto-conical non-resilient gripping member, said gripping member surrounding the conduit and sleeve and having a base portion engaging the other side of the compression ring, spaced surface engaging means on the gripper member in contact with the exterior of the conduit, a first body member surrounding the conduit and sleeve and forming with the compression ring means an annular well confining the rubbery gasket against outward radial expansion, said body member and compression ring cooperating to reduce the axial thickness of the rubbery gasket to exert a preselected radial sealing pressure on the conduit, and a second body member surrounding the conduit and sleeve and having an internal frusto-conical surface mating with that of the gripping member, said first and second body members being axially movable relative to one another to reduce the distance between them to compress the rubbery gasket axially and radially inwardly and the gripping member radially inwardly against the conduit.

4,062,573
CLAMPING DEVICE
Henry Fleischer, 18 Notch Park Road, Little Falls, N.J. 07424
Division of Ser. No. 479,667, June 17, 1974, abandoned, which is a continuation-in-part of Ser. No. 427,149, Dec. 21, 1973, abandoned. This application Feb. 17, 1976, Ser. No. 658,582
Int. Cl.² F16L *33/22*
U.S. Cl. 285—116 **10 Claims**

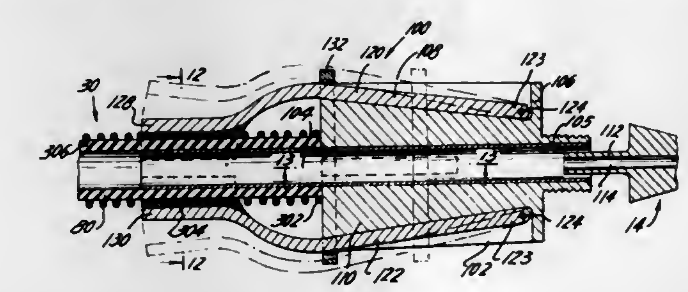

1. A clamping member for attaching one part of a two part hose coupling device to a hose, comprising, in combination, a body section having a bore running therethrough, and comprising a first end portion, an intermediate portion and a second end portion, said first end portion being adapted to be connected to one part of a two part hose coupling device; at least a pair of spaced apart clamping rods each pivotally connected to said body section of said clamping member, each of said clamping rods including a clamp section connected at one end of said rod; and rod moving means disposed about said body section in contact with said clamping rods so that when a hose is inserted in said second end portion of said body section said rod moving means can be positioned so as to force said connecting rods to be pivoted downwardly so that the clamp sections thereof will be forced against said hose and thereby hold said hose in place in said body section and in communication with said one part of said coupling device, said rod moving means member comprising a ring member disposed about said body section of said clamping member, and further including ring retaining means in communication with said ring member, said ring retaining means comprising an upwardly bearing depressible member axially fixed in said body section of said clamping member and disposed below said ring member, said depressible member being adapted to move radially between up and down positions, so that when said depressible member is in its normal up position, it bears upwardly on said ring member thereby preventing movement of said member.

4,062,574
FITTING ASSEMBLY
Harold W. Scholin, Park Ridge, Ill., assignor to Scholin Industries, Inc., Chicago, Ill.
Filed Oct. 5, 1976, Ser. No. 729,774
Int. Cl.² F16L *19/08*
U.S. Cl. 285—340 **4 Claims**

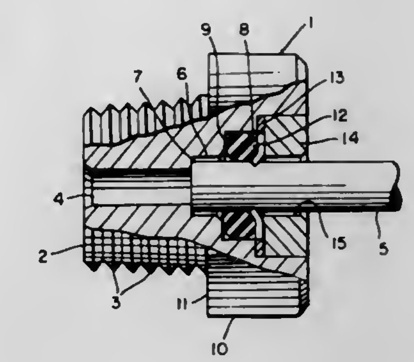

1. A fitting assembly adapted to receive and retain therein a tubular member comprising,
a. a main body member having a passageway therein adapted to communicate with a tubular member inserted in said body member,
b. a first bore in said body to receive the tubular member therein and having a diameter larger than the diameter of said passageway and communicating therewith, thereby forming an annular shoulder to provide a stop against which the tubular member abuts when inserted in said body, the surface of said first bore acting as a support for the tubular member,
c. a second bore in said body having a diameter larger than the diameter of said first bore and communicating therewith, thereby forming a second annular shoulder in said body and providing a first annular recess between the wall of said second bore and the outer surface of the tubular member when inserted therein,
d. an annular sealing ring located in said annular recess adapted to be in sealing engagement with said wall of said second bore, said second annular shoulder and said tubular member when said member is inserted therein,
e. a third bore in said body having a diameter larger than the diameter of said second bore and communicating therewith, thereby forming a third annular shoulder in said body and providing a second annular recess between the wall of said third bore and the outer surface of the tubular member when inserted therein,
f. a retaining ring in said second annular recess abutting against said third annular shoulder and having an inner diameter smaller than the outer diameter of the tubular member inserted therein, a portion of said retaining ring adjacent the inner diameter thereof extending toward said annular sealing ring and bearing thereagainst, whereby the inner annular edge of said ring will bite into the surface of the tubular member and prevent inadvertent removal thereof, the circumference of said inner annular edge of said ring being in substantially the same radial plane, thereby to enable rotation of said tube without causing axial displacement thereof relative to the fitting assembly and,
g. a retainer member secured within said third bore against said retaining ring, thereby locking said retaining ring and said sealing ring in place.

4,062,575
GATE LATCH LOCKING DEVICE
Milton Robins, Marina del Ray, Calif., assignor to PTI - Dolco, Los Angeles, Calif.
Filed Dec. 8, 1975, Ser. No. 638,888
Int. Cl.² E05B *65/00*
U.S. Cl. 292—67 **5 Claims**

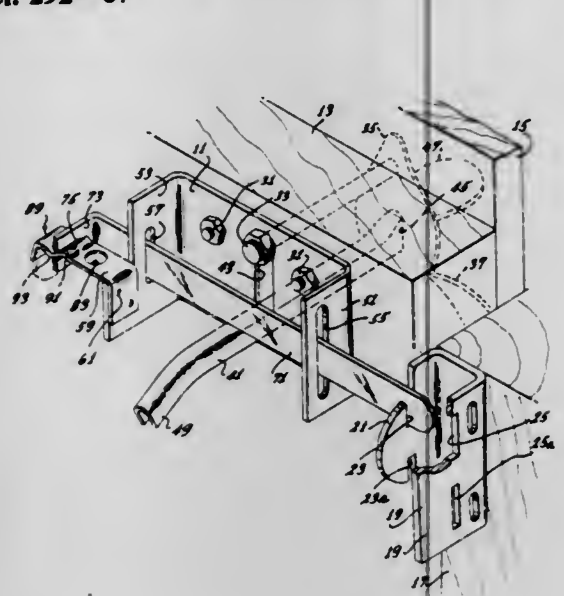

1. A gate latch comprising
a body having
a pair of offset end flanges and
a keeper fixedly attached to one of said end flanges,
a locking bolt extending through at least one of said pair of offset end flanges and having
at least one offset end portion including
an elongated opening therein located over said keeper in cooperative relationship therewith to guide longitudinal and rotational movement of said locking bolt relative to said body.

4,062,576
SLIDING GLASS WINDOW AND DOOR LOCK
Robert Newton Jennings, 4026 Olympic St., San Diego, Calif. 92115; John Murray, 3165 Brilene Lane, San Diego, Calif. 92111, and Donald Herbert Hartleben, 4494 Benhurst Ave., San Diego, Calif. 92122
Filed May 10, 1976, Ser. No. 684,721
Int. Cl.² E05C *19/18*
U.S. Cl. 292—258 **14 Claims**

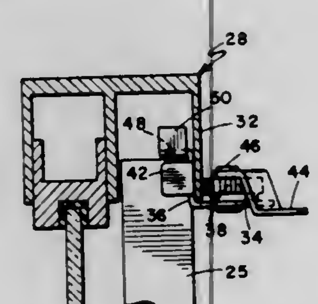

1. In a device for securely locking a sliding panel against sliding movement along upper and lower parallel tracks and against vertical movement into the upper track and out of the lower track wherein the tracks have at least one sidewall and wherein the improvement comprises:
a base,
a pivotally mounted eccentric on said base,
an operating lever attached to said eccentric,
an opposed support flange connected to said base opposite said eccentric,
said eccentric and said support flange accommodating a side wall of a sliding panel track,
a slide stop connected to said device and positioned to extend across the track and block the sliding panel against horizontal movement,
lift stop means for preventing the sliding panel from being raised vertically in the track, positioned vertically above said base, and having the entire horizontal extent thereof positioned between the upper surface of the sliding panel and the upper track.

4,062,577
DOOR HOLDING APPARATUS
Max E. Butterfield, Peoria, and Robert M. Alt, Sr., Washington, both of Ill., assignors to Caterpillar Tractor Co., Peoria, Ill.
Filed Dec. 3, 1976, Ser. No. 747,273
Int. Cl.² E05C *17/02*
U.S. Cl. 292—262 **5 Claims**

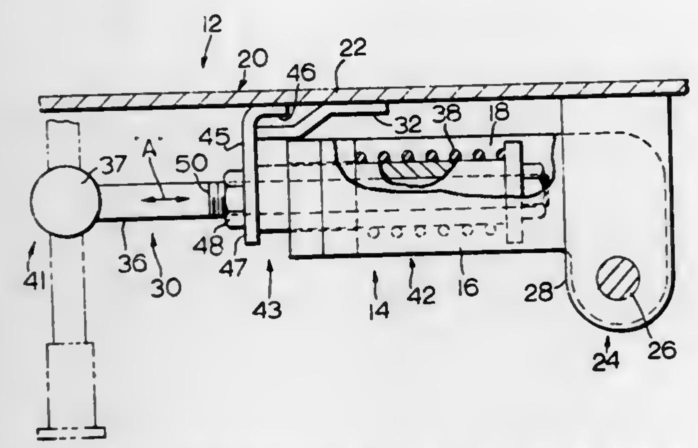

1. Door holding apparatus for a door having a latch element for holding the door at a closed position, comprising:
a housing;
a supporting structure having a catch;
means for pivotally connecting the housing to the supporting structure; and
holding means connected to the housing for rotatable movement relative to the housing and pivotal movement relative to the supporting structure between a stored position at which the holding means is contacting the catch and the supporting structure and forcibly positioned therebetween and lying generally along a plane of the supporting structure and a door holding position at which the holding means is spaced from the catch and is in releasable, holding engagement with the door latch element and maintaining the door at a preselected open position.

4,062,578
DOOR SAFETY LATCH
Trevor G. Chen, Miami, Fla., assignor to Trepege Products Inc., Coral Gables, Fla.
Filed Dec. 27, 1976, Ser. No. 754,554
Int. Cl.² E05C *17/16*
U.S. Cl. 292—262 **1 Claim**

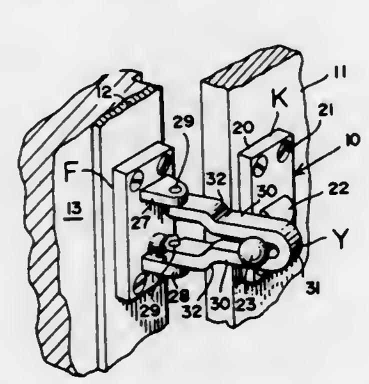

1. A door safety latch comprising substantially arcuate lug means adapted to be mounted on a door, a substantially enlarged head mounted on the free end of said lug means, a base member adapted to be mounted on a wall adjacent said lug means, yoke means having spaced apart leg portions, means pivotally mounting free ends of said leg portions to said base member, a plurality of stepped surfaces mounted on said free end of one of said leg portions, said leg portions being sufficiently spaced apart adjacent to said pivot means to permit said enlarged head to pass therethrough and the rest of said leg portions being only sufficiently spaced apart to permit said lug means to slide therethrough and detent means mounted at said pivot means providing substantial resistance to the pivotal movement of said yoke means, said detent means having a bore in said base member in substantial alignment with said stepped surfaces, a substantially elongated detent member secured in said bore having a free end portion engaging said stepped surface, said detent member having a substantially pointed free end portion and being reduced in diameter in proximity of its mid-portion permitting said detent member to bend at said mid-portion to become foreshortened as said stepped surfaces move past said detent member upon applying increased forces at said yoke means, said detent member engaging one of said stepped surfaces upon the partial opening of said door.

4,062,579
KNOB ATTACHMENT FOR DOOR LATCH
Dennis G. Potter; Hagen Dietrich, both of Delta, and Joseph Potschka, Vancouver, all of Canada, assignors to Norris Industries, Inc., South Gate, Calif.
Division of Ser. No. 712,898, Aug. 9, 1976. This application Aug. 9, 1976, Ser. No. 712,897
Int. Cl.² E05B *3/06*
U.S. Cl. 292—348 **7 Claims**

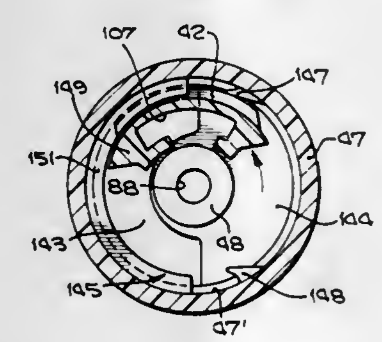

1. An operating assembly for a door lock comprising a rose member,
a knob member having a rotatable retention mounting on the rose member and
an axially extending removable spindle,
a spindle mounting mass in said knob member having a spindle retaining pocket,
a spindle movement clearance space in said rose member in axial alignment with said pocket,
an axially outwardly facing shoulder on said mass extending in an arcuate direction,
an axially inwardly facing arcuate shoulder on said rose member in a position or rotationally moving retention with said outwardly facing shoulder when in assembled condition,
means forming an accommodation space in said rose member diametrically opposite said inwardly facing arcuate shoulder of size greater than said mounting mass for temporary reception of said mounting mass during assembly,
and complementary stop means respectively on said rose member and said knob member acting between said rose member and said knob member at limits of rotational movement of said knob member.

4,062,580
FENDER TRIM APPARATUS FOR VEHICLES
Norvel P. West, 7022 S. Shore Drive, Chicago, Ill. 60649
Continuation-in-part of Ser. No. 556,302, March 7, 1975, abandoned. This application July 16, 1976, Ser. No. 706,002
Int. Cl.² B62D *25/16*
U.S. Cl. 293—62 **8 Claims**

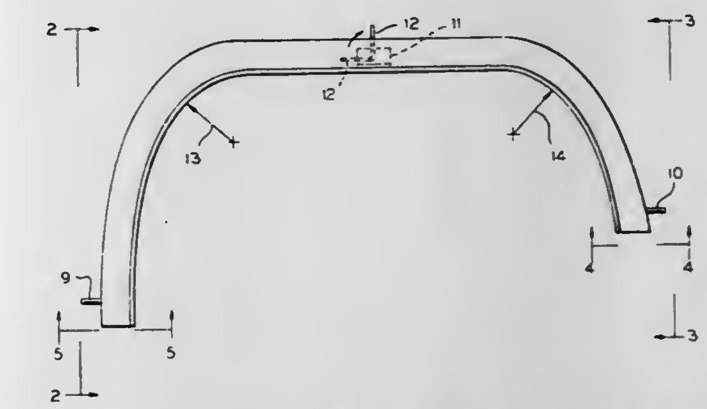

1. An automotive trim device which replaces a vehicle's wheel-well covers by installation into the vehicle's wheel-well cover mounting feet, said device comprising:
a flanged and shaped fender trim apparatus, said apparatus including a continuous inner flange portion positioned behind a fender panel of said vehicle in a position juxtaposed to the interior side of said fender panel proximate to said vehicle's wheel-well opening, said inner flange portion curving behind said fender panel to said juxtaposed position and a substantially thin flat outer exposed flange portion emanating from and substantially normal to said inner flange portion which outlines the perimeter of said fender at said wheel-well opening with an exposed edge projecting substantially proximate to the exterior side of said fender panel; and
means for mounting said apparatus securely juxtaposed to the fender panels of the vehicle in cooperation with said vehicle's wheel-well cover attachment apparatus thereby providing trim for said vehicle along the inner perimeter of said vehicle's fender wheel-well opening.

4,062,581
SEPARATION DEVICE FOR RELEASING PARACHUTES
Dieter Münscher, Vechelde, Germany, assignor to Deutsche Forschungs- und Versuchsanstalt fur Luft- Und Raumfahrt e.V., Linder Hohe, Germany
Filed Nov. 22, 1976, Ser. No. 744,178
Claims priority, application Germany, Nov. 26, 1975, 2552935
Int. Cl.² B64D *17/38*
U.S. Cl. 294—83 A **9 Claims**

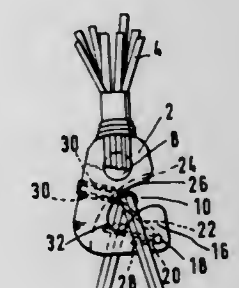

1. An automatic separation device for separating a parachute from a load, comprising a body having an opening formed therein that defines a hook portion on which a free end is formed, said opening receiving a connecting means for said load therein and being formed as an arc of a circle, the center of curvature of which is located in the free end of said hook portion, a torsion spring mounted in the free end of said hook portion and including a spring arm that extends outwardly of

said free end and spans the arcuate shaped hook opening, said spring arm being pivotal about the axis of said spring for movement from a load tensioned position adjacent to the inner end of said opening to an ejecting position adjacent to the exposed outer end of said opening, the axis of said spring being substantially coincident with the center of curvature of said arcuate opening, and frangible means mounted on said body adjacent to said opening for initially securing said connecting means in said arcuate opening intermediate the inner and exposed outer ends thereof during securement of said load to said parachute, wherein said frangible means is ruptured upon dropping of said parachute to cause said connecting means to force said spring arm to the tensioned position thereof, whereafter said spring arm ejects said connecting means from said hook portion when moved to the ejecting position upon landing of said parachute and load attached thereto upon a surface.

4,062,582
TRUCK CONSTRUCTION
Donald W. Youmans, San Jose, Calif., assignor to FMC Corporation, San Jose, Calif.
Filed May 4, 1976, Ser. No. 683,134
Int. Cl.² B62D *33/06*
U.S. Cl. 296—28 C **2 Claims**

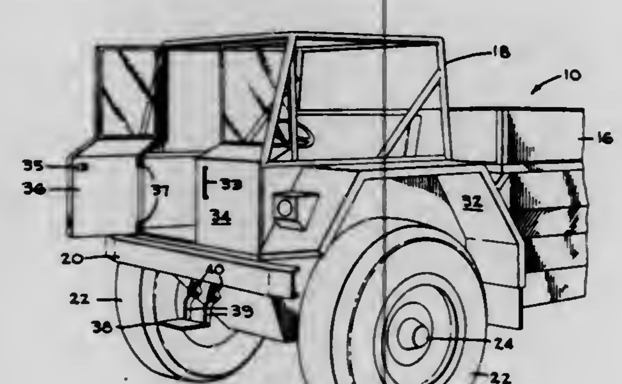

1. A truck comprising a frame, a pair of laterally spaced front wheels supporting the front end of the frame and a pair of laterally spaced rear wheels supporting the rear end of the frame, a cargo bed supported upon said frame and extending from the rear end of the frame to a position spaced just rearwardly of said front wheels, said cargo bed extending transversely of said truck at least substantially to the planes defined by the outer sides of said front and rear wheels, a cab supported by said frame between said front wheels and extending from said cargo bed to the front end of the frame, said cab being separate from said cargo bed and being separately mounted on said frame from said cargo bed, said front wheels extending upwardly in generally parallel relationship to and past at least a portion of the sides of said cab, said cab having a front face at said front end of the frame extending generally transversely of said frame, said front face of the cab extending in a generally vertical plane substantially from one side of said frame to the other side thereof, said front wheels extending forwardly to a position substantially adjacent said vertical transverse plane of said front face of the cab, and a single door only being provided in said front face of the cab to allow access to the cab directly from the front of the truck, said door being provided on the side of said cab opposite to the driver's side, said door being hinged about a vertical axis in said plane so as to swing outwardly of said cab at the front thereof.

4,062,583
AUTOMOBILE TRUNK ATTACHABLE BRACE
Ronald D. Taylor, Norwich, Conn., assignor to The Raymond Lee Organization, Inc., New York, N.Y., a part interest
Filed Aug. 18, 1976, Ser. No. 715,243
Int. Cl.² B62D *65/00*
U.S. Cl. 296—76 **2 Claims**

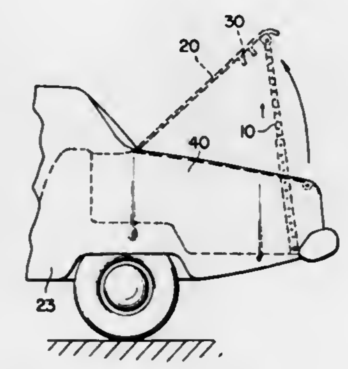

1. A telescopic brace mounted to the underside of a hinged vehicle trunk lid enclosing a trunk compartment, together with
first fastening means to detachably fasten the brace to the floor of the said vehicle trunk compartment to maintain the trunk lid in the open position, and
second fastening means fixed to the underside of the trunk lid to detachably fasten the brace to the underside of the trunk lid so as to store the brace when the lid is closed.

4,062,584
COMBINATION SEAT AND CARRYING CASE
Warren Pinkham, and Alice Pinkham, both of 8 Pond St., Essex, Mass.
Filed Sept. 8, 1976, Ser. No. 721,432
Int. Cl.² A47C *7/62*
U.S. Cl. 297—193 **1 Claim**

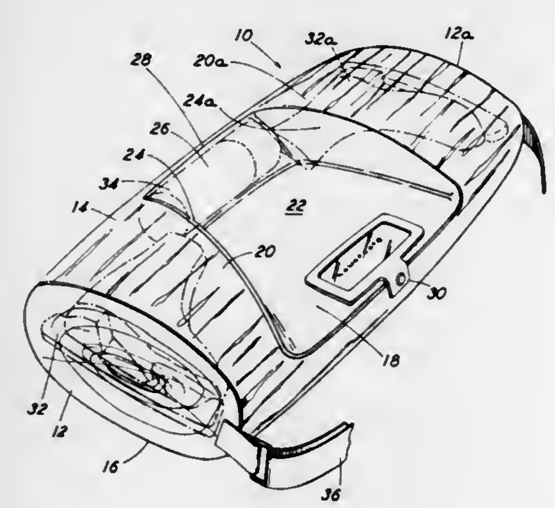

1. A carrying case and seat comprising
a. a hollow rigid molded plastic body;
b. said body being elongated and having a generally oval cross section normal to the elongated dimension;
c. one side of the oval cross section being the bottom and said bottom being flattened to conform to a generally flat surface;
d. an opening centrally located in the top of said body;
e. a seat shaped cover having open and closed positions hingedly connected to said body and operative to fit in and to close said opening when in its closed position;
f. said seat shaped cover giving access to the interior of said case when in its open position;
g. the seat shaped cover having a seat part which is recessed into said body when in its closed position and useable as a seat without adjustment;
h. first and second portions of the top of said body outboard of said opening laterally adjacent to said seat-shaped cover being effective as arm rests;
i. the hollow interior of said body being adapted to the storage of articles;
j. a latch for holding the seat-shaped cover in the closed position; and
k. a carrying strap for carrying said carrying case.

4,062,585
VIBRATION ABSORPTION PAD KIT FOR SEAT MOUNTING
Arthur J. Herring, Jr., 3 Hunter Ridge Road, Sussex, N.J.
Filed Apr. 29, 1976, Ser. No. 681,296
Int. Cl.² B62J *1/00*
U.S. Cl. 297—195 **4 Claims**

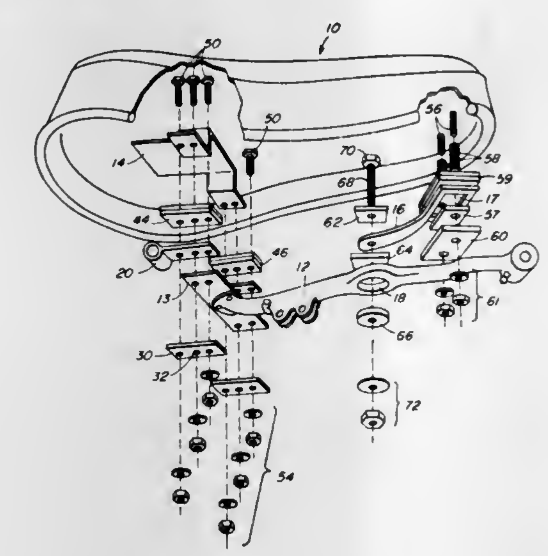

1. A kit of resilient absorbtion pad members of a rubber type compound to insulate a seat of a motorcycle from high frequency vibrational emanations created by the vehicle chassis and transferred to main seat support frame member attached to juxtaposed seat support frame members comprising
a plurality of substantially rectangular pads dimensioned to conform to the surface area of said interconnecting juxtaposed seat support frame members abutted and interfaced by said pads, said pads positioned to interpose said seat frame members from direct contact to the interconnections thereof to interrupt and to attenuate the direct line of vibrational transmission through said juxtaposed rigid seat frame member interconnections;
apertures within said pads positioned to correspond with apertures within said juxtaposed seat frame members, to which said pads abut, dimensioned to receive snugly therethrough securing means, preferably bolts which secure said seat support frame members;
at least one contoured pad for insertion within relitively large seat support frame apertures, located a juxtaposed frame interconnections;
said contoured curved pad conforming in size and shape to said frame aperture to fit snuggly therein;
said contoured pad having at least one aperture to receive securing means therethrough, dimensioned to snugly abut said securing means;
each of said absorbing pads having two ridged surfaces, each surface having ridges running transverse to the other and having a static load of 50 to 150 pounds per square inch and a durometer reading of 45.

4,062,586
HANGING CHAIR
Eileen S. Ortize, P.O. Box 585, Pawleys Island, S.C. 29585
Continuation-in-part of Ser. No. 648,106, Jan. 9, 1976, Pat. No. 4,002,368. This application Oct. 19, 1976, Ser. No. 733,923
Int. Cl.² A47C *15/00, 5/02*
U.S. Cl. 297—248 **10 Claims**

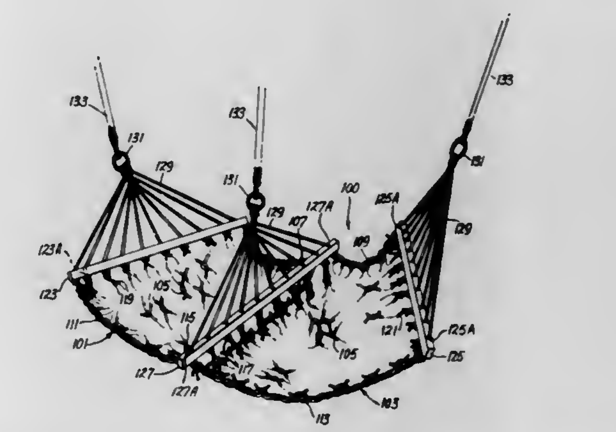

1. A chair for hanging from an overhead support, which chair comprises:
a. a pair of flexible seats, with each seat having a substantially trapezoidal configuration and formed substantially of loosely woven material which permits the seats to individually expand in all directions, wherein:
1. the back portion of the chair is defined by the shorter parallel sides of the seats,
2. the front portion of the chair is defined by the longer parallel sides of the seats,
3. the mid-section of the chair is defined by two adjacent non-parallel sides of the seats, and
4. the outer sides of the chair are defined by the remaining two non-parallel sides of the seats;
b. a frame member carried by the mid-section for joining the two non-parallel sides adjacent each other and maintaining the mid-section in a stretched condition,
c. a frame member carried by each of the outer sides for maintaining the outer sides in a stretched condition; and
d. means carried by the seats for hanging the chair from the overhead support.

4,062,587
BACK POSITION CONTROL DEVICE FOR CHAIRS
Richard H. Wolters, Grand Rapids, Mich., assignor to Herman Miller, Inc., Zeeland, Mich.
Filed Jan. 13, 1976, Ser. No. 648,794
Int. Cl.² A47C *7/027*
U.S. Cl. 297—306 **15 Claims**

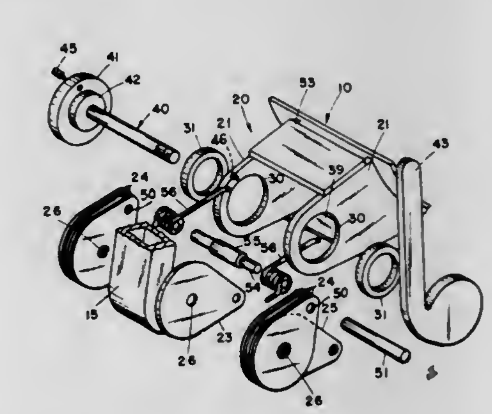

1. In a chair having a seat supporting plate and a back supporting post, a manually operable clutch pivotally mounting said post to the rear portion of said plate, said clutch comprising: a trunnion having a pair of laterally spaced side members, said trunnion rigidly mounted to said plate and projecting rearwardly therefrom; said arms having a pair of aligned apertures; said post having a pair of elongated spaced wings rigidly

secured to the lower end thereof received between said side members and extending forwardly at an acute angle to said post toward said plate; a shaft extending through said apertures and said wings adjacent the bottom of said post; means including annular bushings supporting said shaft in said apertures whereby it serves as the pivotal support for said post; spring means engaging the forward end of said wings and said plate and the lower end of said post forward of said shaft and pivotally urging said forward end of said wings downwardly and said post into forwardly erected position; at least one elongated clutch plate slidably mounted on said shaft between each of said wings and the adjacent one of said side members; means secured against movement with respect to said supporting plate and attached to each of said clutch plates and holding said clutch plates against rotation about said shaft; a handle mounted on one end and a stop mounted on the other end of said shaft, said handle being rotatable for changing the spacing between said stop and said handle for forcing said clutch plates into tight frictional engagement with said wings locking said post against pivotal movement.

4,062,588
SWIVEL SEAT ASSEMBLY
Robert Gene Draney, Wichita, Kans., assignor to J. I. Case Company, Racine, Wis.
Filed Mar. 29, 1976, Ser. No. 671,283
Int. Cl.² A62B *35/00;* **F16M** *13/00*
U.S. Cl. 297—385 **2 Claims**

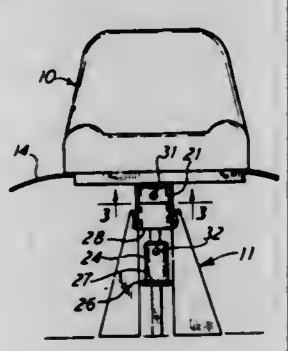

1. A swivel seat assembly for use in a tractor having a floor comprising a seating portion for supporting a person, seat belts attached to said seating portion for holding a person onto said seating portion, a seat pedestal affixable to said floor, a tubular member attached to each of said seating portion and said pedestal and having the same internal diameter and being vertically co-axially disposed and having matching annular surfaces of the same diameter in end-to-end rotational contact with each other for full-circle rotating of said seating portion about the common axis and relative to said pedestal, a cylindrical pin of the diameter of said tubular members and snugly disposed within and extending between said tubular members for axially aligning said members together and thereby prevent eccentric relative movement of said tubular members, and stops operative between said pin and both of said tubular members and extending radially of said tubular members and beyond the inner diameters thereof for maintaining said tubular members in end-to-end rotational contact and for securing said tubular members against relative tipping, said pin extending below the lower end of the lower one of said tubular members, a head on said pin and overlapping and engaged with the lower surface of said lower tubular member to present the one of said stops operative between said pin and said lower tubular member, and a removable pin extending radially between the upper one of said tubular members and said cylindrical pin to present the one of said stops operative between said pin and said upper tubular member.

4,062,589
CHAIR WITH CONTOURED SEAT
Gerhart P. Klein, and Brigitte I. Klein, both of 45 Raymond St., Manchester, Mass. 01944
Filed Aug. 4, 1976, Ser. No. 711,172
Int. Cl.² A47C *1/12*
U.S. Cl. 297—450 **9 Claims**

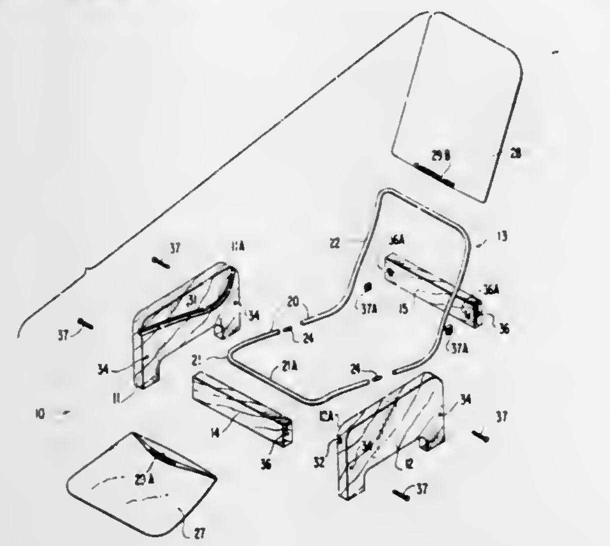

1. An article of furniture comprising:
A. a seat that is contoured in edge profile;
B. spaced, upright side members including grooves formed in counterfacing surfaces thereof, said seat grooves conforming to the contour of a portion of said seat in edge profile; and
C. means for spacing said side members so said seat is disposed in said grooves, said side members constituting the sole and direct support for said seat.

4,062,590
CHAIR STRUCTURE
Norman Polsky, Kansas City; Frank Burnett, Lee's Summit, both of Mo.; James L. Gerner, Shawnee Mission; Norman J. Heying, Lake Quivira, both of Kans., and Edgar M. Lieberman, Kansas City, Mo., assignors to Fixtures Manufacturing Corporation, Kansas City, Mo.
Filed May 24, 1976, Ser. No. 689,210
Int. Cl.² A47C *7/02*
U.S. Cl. 297—455 **8 Claims**

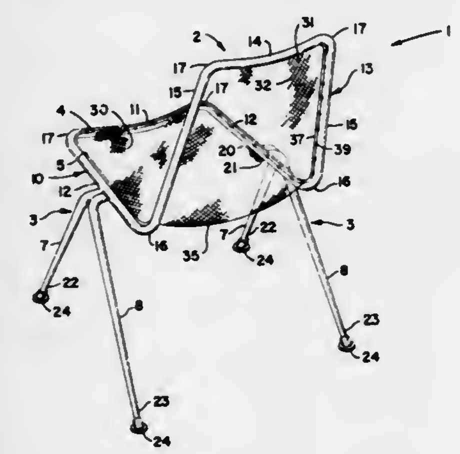

1. A chair structure comprising:
a. a seat and back frame of closed configuration having connected seat and back side members at each side with a front member connecting the seat side members and extending across and forming the front of a seat portion of the frame and with a top member connecting the back side members and extending across and forming the top of a back portion of the frame;
b. means attached to said frame for supporting said frame above a surface;
c. a body support member extending between said side, front and top members of said seat and back frame and having side and end marginal portions secured thereto, said body support member being a plurality of closely spaced interlaced metallic strands and comprising a mesh body, said mesh body being formed into a body supporting surface with the strands oriented diagonally between the side, front and top members of said seat and back frame;
d. means for fastening said body support member along the length of the marginal edge portion thereof to respective side, front and top members of said frame;
e. said fastening means comprising a rod member of closed configuration similar to that of said frame and being marginally smaller than an inside marginal dimension of said frame;
f. said body support member marginal edge portion being partially wrapped in one direction about said rod member and doubled back in the opposite direction forming a mesh sandwich attachment portion disposed between said rod member and said frame; and
g. means securing said rod member to the inner marginal dimension of said frame with said mesh sandwich portion therebetween.

4,062,591
BARROW
David Harris, and Jessie Harris, both of 48 Great Northern Highway, Middle Swan, Australia
Filed Dec. 9, 1975, Ser. No. 639,108
Claims priority, application Australia, Dec. 11, 1974, 9965/74
Int. Cl.² B62B *1/04*
U.S. Cl. 298—2 **1 Claim**

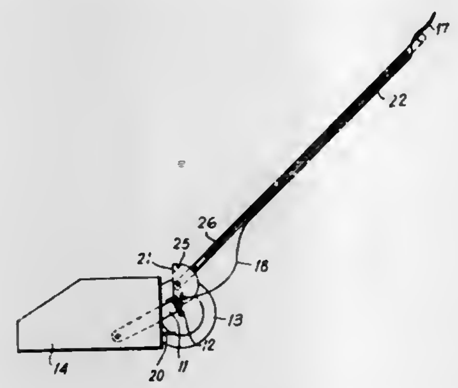

1. A barrow apparatus including a wheeled frame, a hopper pivotally mounted on the frame for movement about a transverse horizontal axis, a handle member pivotally connected to the frame, latch means disposed between the hopper and the frame, said latch means being defined by a catch member on said frame engaging against a stop means on said hopper, said catch member being spring biased to its outermost latching position, the outer face of the latch member being downwardly and outwardly sloped to permit said catch member to move away from the stop means and allow the hopper to pivot about said transverse horizontal axis; and second latch means disposed between the handle member and the frame defined by a pawl mounted on said frame and coacting with dog means connected to said handle for selectively pivoting and positioning said handle along a substantially horizontal axis with respect to the frame.

4,062,592
LIFTING MECHANISM FOR DUMP TRUCKS
Marino Pañeda Ordoñez, Cº de Oviedo - Pumarin, Gijon, Asturias, Spain
Filed Sept. 3, 1976, Ser. No. 720,456
Int. Cl.² B60P *1/04*
U.S. Cl. 298—22 B **1 Claim**

1. A lifting mechanism for truck bodies and the like in combination with a pair of laterally spaced longitudinal stationary frame members, a dump frame including a pair of laterally spaced longitudinal track members pivotally connected to said stationary frame members adjacent one end thereof, said longitudinal track members disposed in a plane immediately above and parallel to the plane of said longitudinal stationary frame members, a rectangular frame stabilizer assembly positioned between and spanning the lateral distance between said laterally spaced longitudinal track members, a pair of pivot connections connecting the opposite sides of said rectangular frame at a position forwardly of the pivotal connection of the dump frame to said stationary frame, a pair of connectors on the opposite sides of the ends of said rectangular frame stabilizer assembly engaged for sliding movement in said pair of laterally spaced longitudinal track members, an extensible lift cylinder connected between the dump frame and the rectangular frame stabilizer assembly, the cylinder portion of said lift cylinder

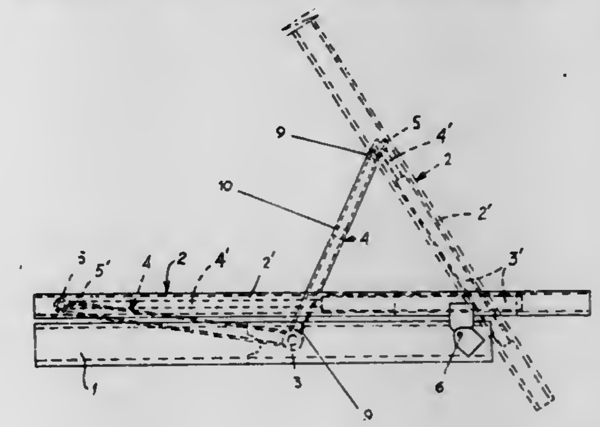

being fixedly connected to the dump frame, and the rod portion of the lift cylinder being pivotally connected to the rectangular frame stabilizer assembly at a position adjacent said pair of slidable connectors, whereby upon retraction of said lift cylinder said dump frame is moved about its pivot connection to said stationary frame members from a horizontal position to a raised dump position, and an X brace extending the length of said rectangular frame stabilizer assembly, the opposite ends of said X brace being rigidly connected to corresponding ends of the longitudinally extending members of said rectangular frame, end and intermediate brace bars extending transversely between said longitudinally extending members, thereby providing a rigid lifting frame to reduce twisting during operation under heavy load.

4,062,593
MINING MACHINES
Terence John Gapper, Duffield, and Owen O'Neill, Littleover, both of England, assignors to Coal Industry (Patents) Limited, London, England
Filed Feb. 24, 1976, Ser. No. 660,814
Claims priority, application United Kingdom, Mar. 20, 1975, 11622/75
Int. Cl.² E21C *35/12*
U.S. Cl. 299—1 **5 Claims**

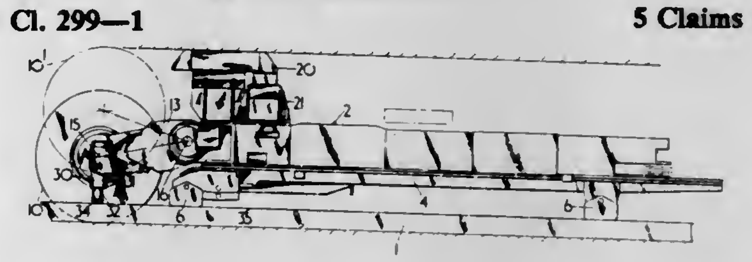

1. A mining machine adapted to traverse on an armored face conveyor, said machine comprising:
a body adapted to move on a track fixed with respect to the conveyor;
a cutter head;
an arm pivotably mounted on the body for movement about an axis, said arm supporting said cutter head remote from said axis; and
a sensor carried on said arm for sensing the distance between

the cutter head and the conveyor and for deriving a signal indicative of the distance, said sensor being engagable with the conveyor and comprising a telescopic assembly including a piston and cylinder arrangement and resilient biasing means for urging said arrangement toward engagement with the conveyor, said sensor further comprising a potentiometer arranged to sense variation in the effective length of the telescopic assembly and to derive said signal indicative to the sensed variation, which derived signal is fed to a steering mechanism of the machine.

4,062,594
RECIPROCATING DRIVE METHOD OF MINING AND APPARATUS THEREFOR
John C. Haspert, 895 Coronado Drive, Arcadia, Calif. 91006
Filed June 18, 1976, Ser. No. 697,320
Int. Cl.² E21C *25/06*
U.S. Cl. 299—10 **24 Claims**

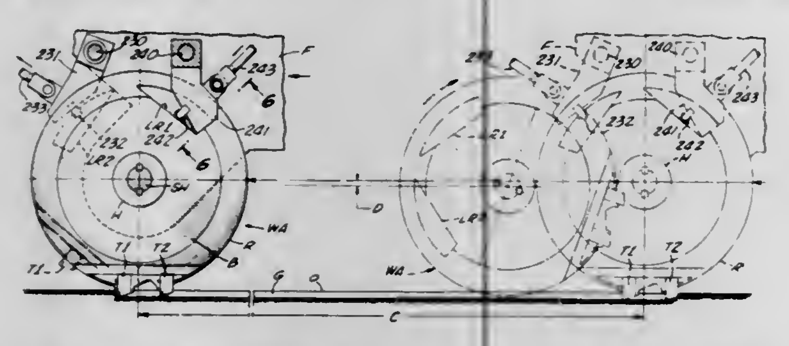

1. A method of mining ore from an ore surface by means of reciprocating movements thereon, comprising the steps of:
- selecting a cutting tooth;
- selecting a wheel having a circumferential edge portion of wedge-shaped radial cross-sectional configuration;
- supporting the tooth and the wheel in juxtaposition to each other and to the ore surface;
- reciprocatingly moving the tooth and the wheel, in synchronism, across the ore surface;
- in one direction of movement, shifting substantially all of the weight of both wheel and tooth to the tooth so that the tooth cuts a groove in the ore surface; and
- in the other direction of movement, shifting substantially all of the weight of both wheel and tooth to the wheel, and supporting the wheel for rotation relative to the ore surface so that the wheel edge rolls within the groove;
- whereby when the groove becomes sufficiently deep, the wheel edge applies an outward and downward crumbling force to the upper edges of the groove walls.

4,062,595
AUTOMATIC FACE TRANSFER LINEAR CUTTING ROTARY HEAD CONTINUOUS MINING MACHINE AND METHOD
Wallace W. Roepke, Excelsior; David P. Lindroth, Apple Valley, and Richard J. Wilson, Minneapolis, all of Minn., assignors to The United States of America as represented by the Secretary of the Interior, Washington, D.C.
Filed Oct. 15, 1976, Ser. No. 732,676
Int. Cl.² E21C *27/24, 35/20*
U.S. Cl. 299—18 **13 Claims**

9. A method of mining material with a continuous mining machine having a rotatable cutting head whose cross-sectional configuration resembles a Reuleaux triangle comprising the steps of:
- sumping said head while it is rotating into the mine face beginning near the mine floor to cut out a box cut therein when viewed in cross-section; and
- after sumping said head substantially its entire depth, shearing the mine face in an upward direction substantially the

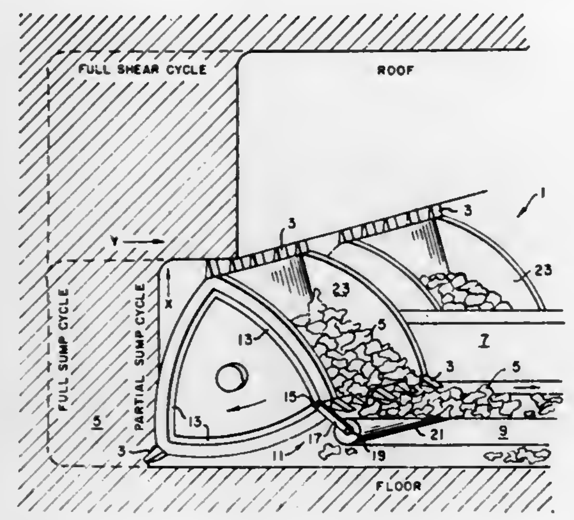

same depth as sumped, without removing the head, up to the mine roof.

4,062,596
LOCKING DEVICE FOR PNEUMATIC OUTLET REQUIRING TOOL TO OPEN THE END CAP
George A. Kull, St. Charles, Mo., assignor to ACF Industries, Incorporated, New York, N.Y.
Filed July 19, 1976, Ser. No. 706,476
Int. Cl.² B65G *53/36*
U.S. Cl. 302—52 **2 Claims**

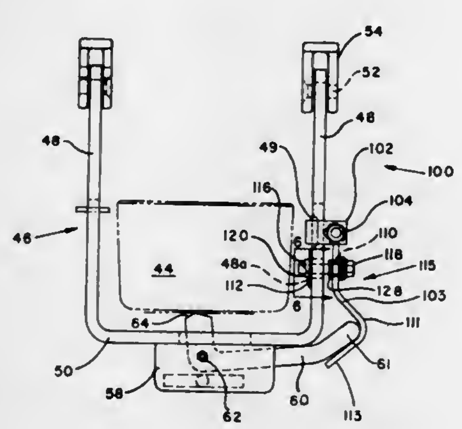

1. In a pneumatic outlet having a "U" shaped bail assembly pivotally mounted on the end wall of the outlet, including a pair of arms which extend generally parallel to a discharge tube of the outlet extending outwardly from said end wall, and a bracket portion which extends generally transverse to the longitudinal axis of the discharge tube and is attached to said arms; a removable end cap which in closed position covers the end of the discharge tube; a locking handle pivotally mounted on said bracket portion which engages said end cap in a closed position; the locking handle being movable to a closed position to maintain the end cap in place on the discharge tube; the improvement comprising:
- a locking assembly to prevent the locking handle from being moved from the closed position, the bail assembly raised and the end cap removed without the aid of an unlocking tool; said locking assembly including a locking member pivotally mounted on at least one bail arm; a distal end portion of the locking member engaging an end portion of said locking handle to maintain the locking handle in said closed position engaging the end cap; a fastener requiring an unlocking tool for operation extending through a first opening provided in the locking member and through a second opening provided in the bail arm; said fastener having a head at one end for receiving an unlocking tool, said fastener having at its other end a protrusion transverse to the axis of the fastener which in locked position engages the inner surface of the bail arm, substantially reducing the liklihood that the bail and end cap will be tampered with in rail yards, whereby when said fastener is engaged by an unlocking tool the fastener and protrusion are movable through the said second opening allowing the locking member to be pivoted about the pivot point, allowing the handle to be manually removed from the closed position, the bail assembly raised and the end cap removed; the protrusion on the fastener not being movable through said first opening so that the fastener will remain attached to the locking handle and will not be lost when the end cap is removed and the outlet is unloaded.

4,062,597
VEHICLE LOAD SENSING ARRANGEMENTS
Patrick Frank Sawyer, and Robin Edward Child, both of Birmingham, England, assignors to Girling Limited, Birmingham, England
Filed July 12, 1976, Ser. No. 704,522
Claims priority, application United Kingdom, July 14, 1975, 29468/75
Int. Cl.² B60T *8/18, 8/26*
U.S. Cl. 303—6 C **8 Claims**

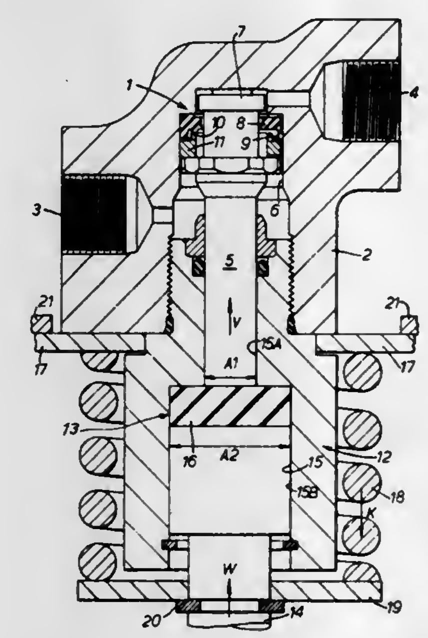

1. In or for a vehicle having an unsprung part and a sprung part and road spring means between said parts, a vehicle load sensing arrangement for a vehicle braking system, said arrangement comprising means defining a first bore, an input member slidably operating in said first bore and being subjected to the force of said road spring means, a stop formed on said input member, a plate engageable with said stop, resilient means having two opposed ends, one end of said resilient means engaging said plate to urge it into engagement with said stop, said resilient means applying a predetermined force which is transmitted through said plate and said stop to said input member in opposition to said road spring means, and the other end of said resilient means engaging said sprung part of said vehicle, means defining a second bore having a cross-sectional area less than said first bore, a valve having a valve member slidably operating in said second bore and movable to control the flow of pressure fluid through said valve, said input member and said valve member being substantially in alignment, and elastomeric means located between and engaging said input member and said valve member and being capable of being urged into said second bore, whereby only a proportion of the force of said road spring means applied to said input member in excess of said resilient means force is transmitted by said elastomeric means to the said valve member, the remaining proportion of said excess force being transmitted to said sprung part of said vehicle.

4,062,598
WEDGE BLOCK LOCK FOR VEHICLE TRACK END CONNECTORS
Roland A. Magnuson, Seattle, Wash., assignor to The United States of America as represented by the Secretary of the Army, Washington, D.C.
Filed Aug. 9, 1976, Ser. No. 712,629
Int. Cl.² B62D *55/20*
U.S. Cl. 305—58 PC **5 Claims**

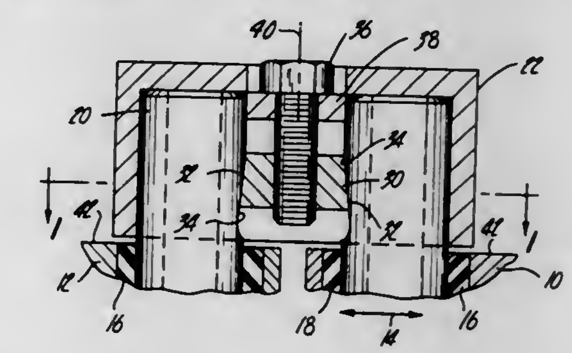

1. In a track-laying vehicle; an endless track comprising a series of ground-engagement shoes serially arranged one behind the other; coupling pins extending transversely through each shoe adjacent the shoe leading and trailing ends; each coupling pin having exposed ends extending outwardly beyond the shoe side surfaces; a hollow connector telescoped over the exposed ends of adjacent coupling pins on adjacent shoes; a tapered wedge block slidably guided within each hollow connector for rectilinear axial movement in a plane passing through the axes of the coupled pins; the facing surfaces of the coupled pins being flattened and tapered in an axial direction, each wedge block having tapered side surfaces engaged with the tapered surfaces of the coupled pins, whereby axial movement of the wedge block in one direction wedges the coupled pins apart to positions locked against internal connector surfaces; and a threaded bolt element engaging an end wall of each connector and the associated wedge block to produce axial movement of the block, as necessary to lock or unlock the coupled pins from the respective connector; the end wall of each connector and the associated wedge block cooperatively exerting a tensile force on the bolt element as the block wedges the coupled pins apart.

4,062,599
SHAFT GUARD
Edward J. Szkaradek, Santa Ana, Calif., assignor to Morehouse Industries, Inc., Fullerton, Calif.
Filed June 25, 1976, Ser. No. 699,840
Int. Cl.² B01F *7/16*
U.S. Cl. 308—1 A **10 Claims**

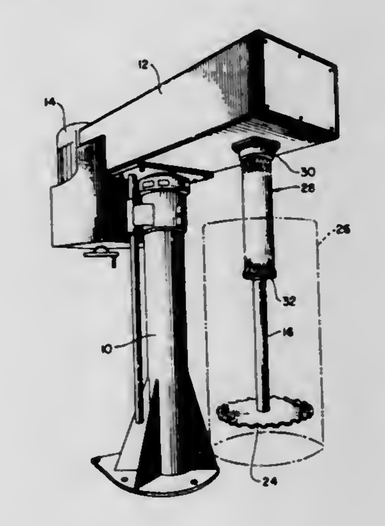

1. Industrial apparatus for dispersing or mixing liquids comprising:
- a support;
- an impeller shaft having an impeller mounted on its lower

end and having its upper end rotatably mounted in said support so that the impeller and a portion of the shaft can extend into a container holding liquids to be mixed; and
a guard spaced from and surrounding the upper end of said shaft and extending downwardly sufficiently to prevent inadvertant contact with the rotating shaft over the upper end of the container, the upper end of said guard being sufficiently close to the support to prevent access to the shaft through the upper end of said guard, said guard being made of rigid material with many holes therein so that the guard does not collect much of the liquid being mixed within the container and the guard is easily cleaned.

4,062,600
DUAL-GIMBAL GYROSCOPE FLEXURE SUSPENSION
Stanley Frederick Wyse, Encino, Canada, assignor to Litton Systems, Inc., Woodland Hills, Calif.
Filed Apr. 5, 1976, Ser. No. 673,745
Int. Cl.² G01C *19/18*
U.S. Cl. 308—2 A **8 Claims**

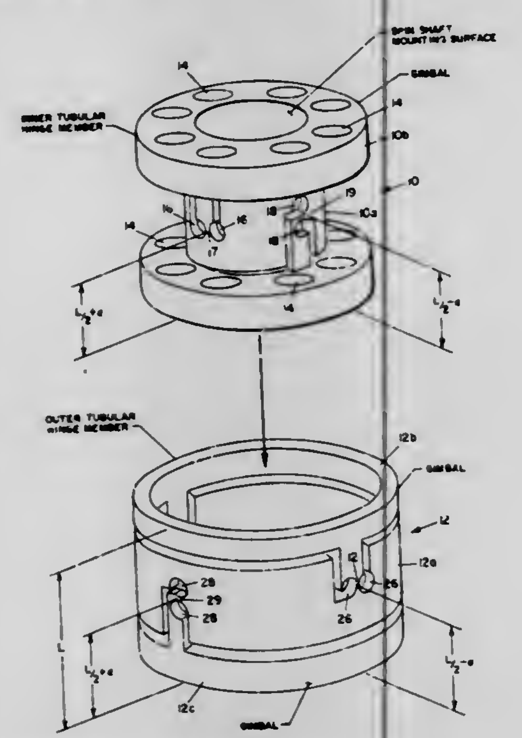

1. A flexure hinge assembly comprising:
a pair of concentric tubular members partially attached to one another, each of said tubular members having at least two pairs of adjacent apertures extending through the walls thereof and each of said pairs of apertures forming a flexure blade, each said flexure blade having a flexure axis, a cross axis and a longitudinal axis, said cross axis being perpendicular to the flexure axis and colineal with a line extending from one wall of the flexure blade to the other between points of minimum thickness, said longitudinal axis being perpendicular to said flexure axis and to said cross axis;
a plurality of flexure hinges each comprising a flexure blade in said inner tubular member and a flexure blade in said outer tubular member, the pair of flexure blades comprising each flexure hinge having mutually perpendicular longitudinal aaxes and a common flexure axis;
said inner tubular member and said outer tubular member each being slotted to form a central element portion connected to a first gimbal element portion by a first pair of diametrically opposed flexure blades having a first colineal flexure axis and connected to a second gimbal element portion by a second pair of diametrically opposed flexure blades having a common second flexure axis, said first and second gimbal element portions being displaced in opposite directions from said central element portion along its axis of rotation;
said first gimbal element portions and said second gimbal element portions being fixedly connected to each other, respectively, to form first and second gimbal elements connected to first and second central element portions by flexure blades, said flexure hinges flexing to permit small angular misalignment between the axes of rotation of said first and second central elements;
said inner and outer tubular members being oriented about the rotational axis of said assembly with colineal first flexure axes and with colineal second flexure axes, said first and second flexure axes being susbstantially mutually perpendicular;
said flexure blades being located in said inner and outer tubular members to displace said first and second flexure axes at a different distance from one end surface of said assembly along its rotational axis.

4,062,601
SELF-CONTAINED MODULAR PIVOT, NOTABLY FOR ROBOTS
Pierre Pardo, and François Pruvot, both of Meudon la Foret, France, assignors to Sofermo, Meudon la Foret, France
Filed June 23, 1976, Ser. No. 698,890
Claims priority, application France, June 24, 1975, 75.19646
Int. Cl.² F16C *7/00*
U.S. Cl. 308—2 R **4 Claims**

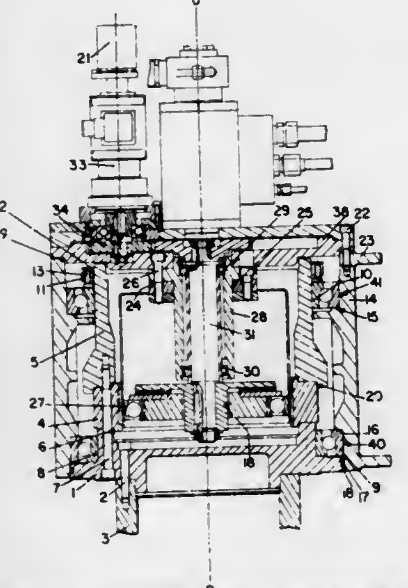

1. A self-contained modular pivot mechanism for coupling first and second machine elements adapted to be rotated through any angle in relation to each other about an axis of rotation, comprising first and second portions connected to said first and second machine elements respectively, said first portion comprising a first tubular member, an internally toothed annulus of a reduction gear, means for rigidly connecting said first tubular member with said annulus, means for centering and locking said annulus against axial movement on a first flange, said first flange secured to the first machine element, said second portion comprising a second tubular member, a pair of rolling-contact bearings, means for disposing said pair of rolling-contact bearings between said first and second tubular members at their opposite ends to center and dispose coaxially said second tubular member in relation to said first tubular member, said second portion further comprising a second flange, means for detachably securing said second flange to said second tubular member at the portion thereof opposite to said first flange, a pivot driving motor, means for securing said pivot driving motor to said second flange, and wherein said second machine element is secured to said second portion of said pivot mechanism, whereby access can be had to said motor independently of the connection between the two machine elements.

4,062,602
BALL BUSHING
Sven Walter Nilsson, Partille, Sweden, assignor to SKF Nova AB, Goteborg, Sweden
Filed Nov. 5, 1976, Ser. No. 739,132
Claims priority, application Sweden, Dec. 31, 1975, 7600006
Int. Cl.² F16C *29/06*
U.S. Cl. 308—6 C **17 Claims**

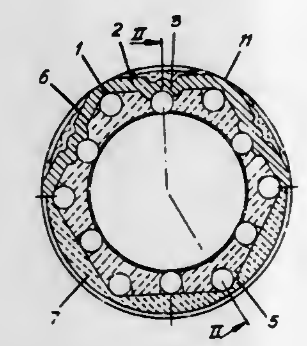

1. A ball bushing comprising a sleeve, a cage and a number of closed ball paths with balls guided by the cage, the balls being loaded between the sleeve and a shaft surrounded by the sleeve in a section of each ball path, characterized by that the sleeve has a mainly constant sectional shape along its whole length and has a number of longitudinal profiles which are countersunk in relation to a circle circumscribing the sleeve, the profiles comprising internal raceways (6,13) for the loaded balls.

4,062,603
AXIAL STOP RING AND ITS APPLICATION AND A METHOD AND DEVICE FOR ITS MANUFACTURE
Michel Alexandre Orain, Conflans Ste Honorine, France, assignor to Glaenzer Spicer, Poissy, France
Filed June 15, 1976, Ser. No. 696,316
Claims priority, application France, July 10, 1975, 75.21680
Int. Cl.² F16C *33/64*
U.S. Cl. 308—217 **5 Claims**

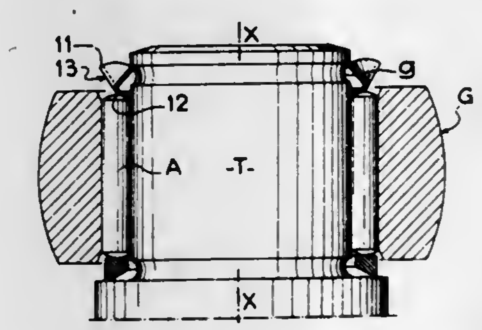

1. A stop member, in particular for axially retaining at least one element located at the periphery of a central element, said member having a general shape of revolution and a substantially L-shaped cross section, a re-entrant angle defined by the two branches of the L facing the axis of the member, a skirt portion of said member which corresponds to a branch of the L which is substantially parallel to said axis having corrugations, and a flange of said member which is substantially perpendicular to the axis of said member corresponding to the other branch of the L.

4,062,604
BAG HOLDER
Peter Popper, Favoritenstr. 130, Wien X, Austria
Filed July 29, 1976, Ser. No. 709,909
Claims priority, application Austria, July 30, 1975, 5902/75
Int. Cl.² B65D *91/00;* **B65B** *67/04*
U.S. Cl. 312—211 **8 Claims**

1. A bag holder for a bag provided with handles, comprising:
a support;
a first arm swingably mounted on said support about a vertical axis;
a second arm swingably mounted on said first arm about a horizontal axis, said arms being upright and having upper ends;
a sealing bar on each of the upper ends of said arms adapted to close the mouth of a bag engaged thereby;
respective bars for engagement with the handles of a bag; and

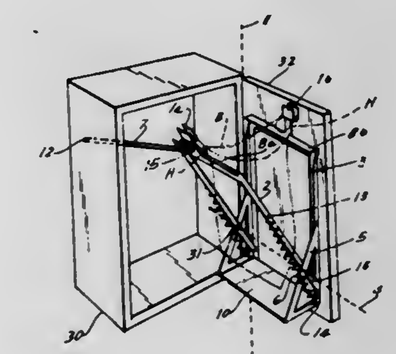

a traction rod swingably mounted on said second arm and connected to said support for automatically swinging the upper end of said second arm away from the upper end of said first arm upon pivotal movement of said arm about said vertical axis, to open the mouth of said bag, said rod being hinged to both said support and said second arm with pivotal movement about two mutually perpendicular axes.

4,062,605
PORTABLE SEATING APPARATUS
Peter A. C. Peters, San Diego, Calif., assignor to The United States of America as represented by the Secretary of the Navy, Washingtn, D.C.
Filed Oct. 4, 1976, Ser. No. 729,049
Int. Cl.² A47B *83/00*
U.S. Cl. 312—235 R **9 Claims**

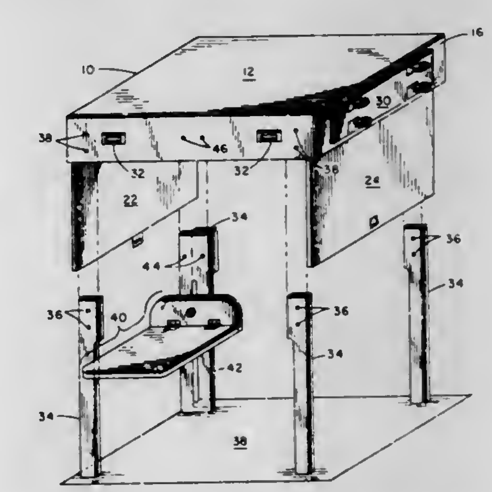

1. A portable anthropometric measurement apparatus having a closed portable position convertible into an open operative measurement position which comprises:
a. rectangular enclosure for storing and transporting other elements of said apparatus when said apparatus is in the closed position;
b. one side of said enclosure being flat to provide a horizontal seat for supporting a subject to be seated for said anthropometric measurements when said apparatus is in an open position;
c. a plurality of detachable legs attachable to said enclosure for supporting said horizontal seat in an elevated position and capable of being stowed within the enclosure;
d. a foot support means having a horizontal flat member detachably mounted to said enclosure and vertically ad-

justable for measuring the knee height of the subjects above the foot supporting member; and
e. transporting means mounted on the enclosure.

4,062,606
CONVERTIBLE SEWING MACHINE CABINETS
Robert Seymour Peets, Watchung, N.J., assignor to The Singer Company, New York, N.Y.
Filed Aug. 17, 1976, Ser. No. 715,100
Int. Cl.² A47B *83/00, 21/00, 81/00*
U.S. Cl. 312—237 **10 Claims**

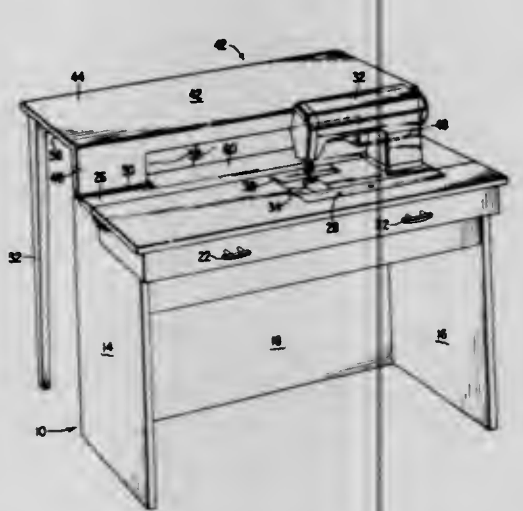

8. A cabinet for performing textile operations and for supporting a sewing machine in a stored position, a flat bed sewing position and a cylinder bed sewing position, said cabinet comprising a top panel portion supported on said cabinet at an elevation for permitting sewing operations in an operator sitting position, said top panel portion including a first laterally elongate panel section having a cut-out portion for receiving a sewing machine while in the stored, flat bed and cylinder bed positions and including moveable panel members operable for covering said cut-out portion to form a contiguous surface with the surface of said first panel section when the sewing machine is in the stored position and for permitting the sewing machine to be raised from the stored position to an operative position, said first panel section and said sewing machine being relatively moveable between a flat bed sewing position and a cylinder bed position, a second laterally elongate panel section disposed in cooperative relationship with said first panel section to form a contiguous surface with said first panel section at least when the sewing machine is in stored position, and a third laterally elongate panel section operably connected to said second panel section for movement between a raised position and a stored position, said third panel section including means for elevating said third panel section to a height higher than said first and second panel sections when in the raised position and for forming a contiguous surface with said second panel section when in the stored position.

4,062,607
CARD FILED BOX WITH OUTWARDLY OPENING FRONT AND REAR PANELS
John D. Locatelli, 3340 59th Ave. SW., Seattle, Wash. 98116
Filed Apr. 2, 1976, Ser. No. 673,210
Int. Cl.² A47B *57/08*
U.S. Cl. 312—258 **6 Claims**

1. A card file box comprising:
a bottom panel with vertical planar ends and a substantially trapezoidal shaped cross-section providing angularly disposed edges at the sides thereof;
two rectangular end panels, each identical with the other;
means rigidly attaching said end panels to the ends of said bottom panel and placing said end panels in substantially vertical position;
rectangular front and rear panels, each identical to the other;
pin means situated near the bottom corners of the end panels and near the bottom corners of each front and rear panel, interconnecting the respective panels and allowing pivotal movement of each front and rear panel with respect to said bottom and end panels, said pin means being located adjacent the angularly disposed edges of said bottom panel so that the extent of outer pivotal movement of said front and rear panels is limited by engagement of the lower portion of said front and rear panels with the associated angularly disposed edges of the bottom panel;
inwardly facing end panel projections at the upper corners of said end panels engageable by upper corner portions of each front and rear panel to limit the extent of inward

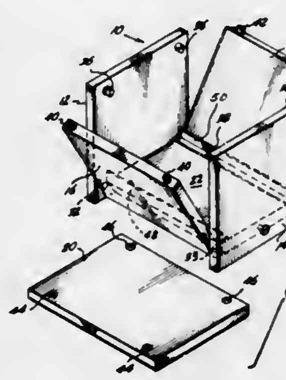

pivotal movement of said front and rear panels, with said front and rear panels being in closed, substantially vertical position when engaging said end panel projections;
upwardly facing projections at the corners of the top edges of said front and rear panels; and
a top panel comprising recesses adjacent the corners thereof which interfit with the upwardly facing projections at the corners of each front and rear panel and thus retain the front and rear panels in closed position when said top panel is placed on top of said end and front and rear panels to fully close the box.

4,062,608
TELEPHONE HANDSET CORD STORAGE APPARATUS
Arthur Pierce, 89 Dafrack Drive, Lake Hiwaitha, N.J. 07034
Filed Mar. 18, 1977, Ser. No. 779,066
Int. Cl.² H01R *39/00*
U.S. Cl. 339—5 RL **1 Claim**

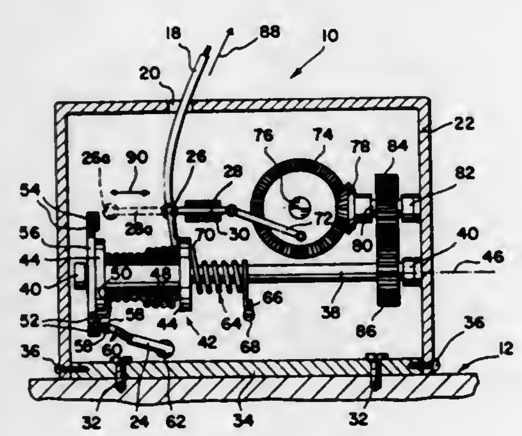

1. A telephone handset cord storage apparatus comprising a housing, means to secure said housing to a supporting surface, a shaft, a reel fixedly secured to said shaft, said reel having a pair of spaced apart plates extending radially outwardly from said shaft, said shaft journaled within said housing, means to rotatably bias said shaft in a preferred direction of rotation, said housing having an opening, a portion of the length of said cord passing through said opening, one end of said cord being electrically coupled to the handset of a telephone apparatus, said one end of said cord being adjacent said portion of the length of said cord, the other end of said cord being electrically coupled to a plurality of rotors, an insulating disc, said disc fixedly secured to said shaft and extending radially outwardly therefrom, said plurality of rotors fixedly secured to one lateral surface of said disc, said plurality of rotors located in concentric circular paths co-axially aligned with the longitudinal axis of said shaft, a plurality of contacting brushes, said plurality of brushes in touching electrical engagement with said plurality of rotors, said plurality of brushes electrically coupled to said telephone apparatus, a rod, said rod slidably secured to said housing, one end of said rod having an opening therein, said cord passing through said opening in said rod, the longitudinal axis of said rod being disposed parallel to and spaced apart from said longitudinal axis of said shaft, the other end of said rod pivotably affixed to one end of a crankshaft, the other end of said crankshaft pivotably eccentrically affixed to a first bevel gear, said first bevel gear journaled within said housing about a pivot axis, said pivot axis being at right angles to said longitudinal axis of said shaft, a second bevel gear rotatably coupled to said first bevel gear, said second bevel gear co-axially aligned with and fixedly secured to a first spur gear, a second spur gear coupled to said first spur gear, said second spur gear co-axially aligned with and fixedly secured to said shaft, wherein said another portion of the length of said cord is disposed in a plurality of multi-turn layers on said reel intermediate said pair of plates when said shaft is rotated in said preferred direction of rotation.

4,062,609
SPRING CONTACT FOR HIGH FREQUENCY ELECTRICAL SIGNALS
Bruce G. Malcolm, Indianapolis, Ind., assignor to Texscan Corporation, Indianapolis, Ind.
Filed Aug. 9, 1976, Ser. No. 712,494
Int. Cl.² H01R *39/00*
U.S. Cl. 339—8 RL **5 Claims**

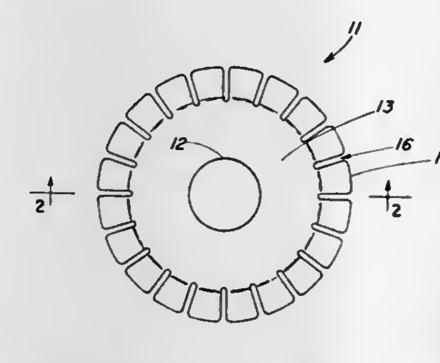

1. An improved apparatus for effecting high frequency electrical contact with a member including a wall comprising a shaft element rotatably mounted on the member and having a first section adjacent said wall; said wall extending essentially transverse to the principal dimension of the shaft; said first section including a first portion extending outwardly from the shaft and a second portion extending outwardly beyond the first portion; the second portion having a plurality of contact fingers inclined toward the wall; the shaft being mounted on the member such that the first and second portions are maintained near the wall with the fingers in continuous tensioned contact with the wall as the shaft element is rotated; said shaft and section each having an outer surface and each having a mass beneath its outer surface, said shaft outer surface being integral with and connected to said section outer surface and shaft mass being integral with and connected to said section mass.

4,062,610
SQUARE MATRIX ELECTRICAL POST RECEPTACLE
Donald Judson Doty, Winston-Salem, and Robert Philmore Reavis, Jr., Statesville, both of N.C., assignors to AMP Incorporated, Harrisburg, Pa.
Filed June 4, 1976, Ser. No. 693,238
Int. Cl.² H01R *13/62;* **H05K** *1/12*
U.S. Cl. 339—75 M **15 Claims**

1. An electrical connector for establishing contact with a plurality of terminal posts which are located in an *x-y* matrix, the spacing between adjacent posts in the *x*-direction being equal to *d*, the spacing between adjacent posts in the *y*-direction being equal to *s*, said connector comprising:
a prismatic housing with a forward face which has a width generally equal to and no greater than 2*d*, and a length generally equal to and no greater than an integral multiple of said distance *s*,
two parallel side-by-side rows of elongated cavities extending inwardly from said forward face into said housing, the centerlines of said rows being spaced apart by said distance *d*, the centerlines of adjacent cavities in each of said rows being spaced apart by said distance *s*,

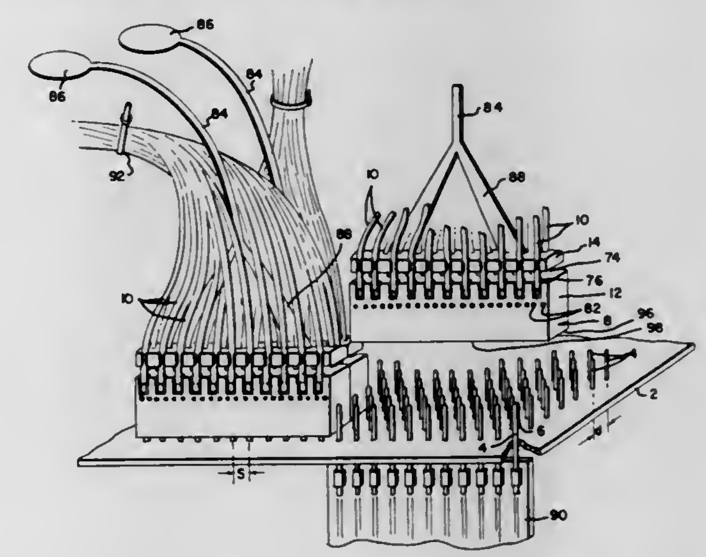

camming means located between said two rows, said camming means being actuated from the rear of said housing, said camming means comprising a linear cam movable towards and away from said forward face, between said two adjacent rows,
a plurality of spring metal contact terminals, one terminal in each of said cavities, each of said terminals being adjacent to said camming means,
whereby a plurality of said connectors can be placed side-by-side and end-to-end with said posts extending into said cavities whereupon said camming means can be actuated and said contact terminals will establish contact with said posts.

4,062,611
CONNECTOR SYSTEM FOR A RACE EQUIPMENT
Jan-Olov Carlsson, Tyreso; Ernst Elof Ake Johansson, Bandhagen, and Lars Christer Pahlen, Varby, all of Sweden, assignors to Telefonaktiebolaget L M Ericsson, Stockholm, Sweden
Filed Sept. 20, 1976, Ser. No. 724,648
Claims priority, application Sweden, Oct. 2, 1975, 7511089
Int. Cl.² H05K *1/14*
U.S. Cl. 339—17 M **4 Claims**

1. A rack mounted electrical system comprising:
a rack; a plurality of rack shelves on said rack; a plurality of connector cases mounted on each of said rack shelves, one side of each of said connector cases being provided with terminal-receiving openings, the other side of each of said connector cases being provided with a well which communicates with said terminal-receiving openings; a plurality of circuit modules each having a plurality of extending terminals, each of said circuit modules being connected to one of said connector cases by its extending terminals fitted into the terminal-receiving openings of the associated connector case; a plurality of first connector carriers, each of said first connector carriers having a plurality of connectors mounted therein with each one of said connectors having at one end a wire-accepting terminal and at the other end a contactor, each of said first connector carriers being fixed in a first portion of the well of one of said connector cases with the contactors thereof in contact with the extending terminals of the circuit modules connected to the connector case; a plurality of first

multiwire cables, each of said first multiwire cables interconnecting in a predetermined manner the wire-accepting terminals of the first connector carriers associated with a rack shelf; a plurality of second connector carriers similar to said first connector carriers; and a multiwire cable harness means mounted on said rack for providing circuit connections between said rack shelves, the wires of said

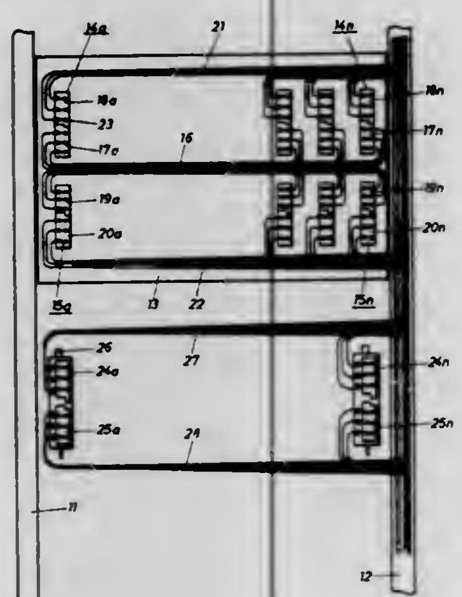

cable harness means interconnecting in a predetermined manner the wire-accepting terminals of the second connector carriers; and each of said second connector carriers being removably inserted in a second portion of the well of one of said connector cases with the contactors thereof in contact with the extending terminals of the circuit module connected to the connector case.

4,062,612
ELECTRICAL FEEDTHROUGH DEVICES
David Roger Evans, Petersfield, England, assignor to Sealectro Corporation, Mamaroneck, N.Y.
Filed Nov. 9, 1976, Ser. No. 740,091
Claims priority, application United Kingdom, Nov. 14, 1975, 47072/75
Int. Cl.² H01R *7/02*
U.S. Cl. 339—94 A **12 Claims**

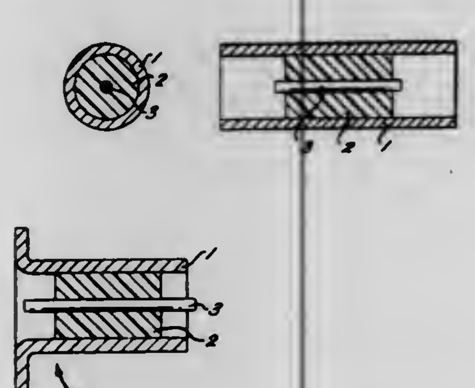

1. An electrical feedthrough comprising a feedthrough housing and, hermetically sealed therein, a hermetic sub-assembly including a conductive sleeve and, disposed within the sleeve a dielectric body carrying a conductor which extends longitudinally of the sleeve, wherein the hermetic sub-assembly is sealed to the feedthrough housing by a flange which projects outwardly relative to the sleeve, and which is physically deformed against an internal surface of the feedthrough housing, with the deformation of the flange comprising a partial shearing thereof against an edge formed by a peripheral step provided on the internal surface of the feedthrough housing.

4,062,613
CONNECTING DEVICE
Claude Henri Eugene Tritenne, Les Morenes, Thoiry, Ain, France
Filed Apr. 2, 1976, Ser. No. 672,966
Claims priority, application France, May 7, 1975, 75.14925
Int. Cl.² H01R *11/20*
U.S. Cl. 339—95 B **9 Claims**

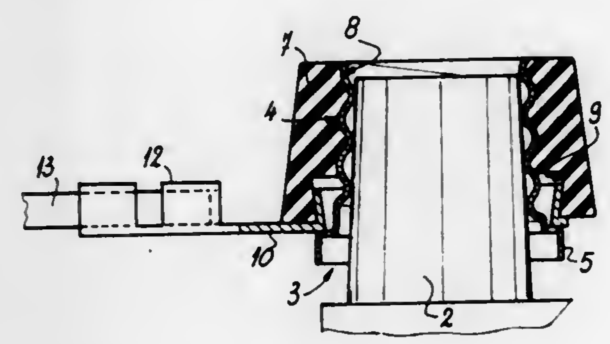

1. Connecting device for a smooth male part of a conical shape made of a soft material, comprising:
a generally cup-shaped socket made of a harder material than the male part, said socket being provided on its external surface with threads, on its internal surface with projecting parts which are distributed along at least one circular helix, and wherein said socket is provided with a certain number of axial openings which are located between two adjacent projecting parts and facilitate its deformation during tightening, and
an outer element provided with a threaded hole complementary in shape with the external surface of said socket, whereby said outer element is adapted to screw over said socket overlying the smooth male part and cause said projecting parts to dig into said male part.

4,062,614
INSULATION PIERCING SLOTTED BEAM ELECTRICAL CONNECTOR
Tillman Johnson Gressitt, Long Valley, and Richard O'Regan, Bridgewater, both of N.J., assignors to Bell Telephone Laboratories, Incorporated, Murray Hill, N.J.
Filed July 30, 1976, Ser. No. 710,019
Int. Cl.² H01R *9/08*
U.S. Cl. 339—97 R **9 Claims**

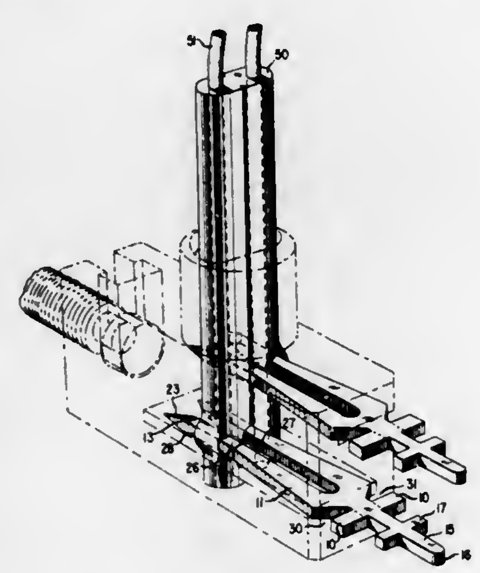

1. A slotted beam connector for effecting an electrical connection with an insulation covered electrical conductor including
a flat sheet of electrically conductive material bifurcated from an intermediate base portion to one end, each of the furcations having a progressively tapered cross section for distributing forces internal thereto to produce a force couple between said furcations,

means, at the end of each furcation, for piercing through said insulation covering said electrical conductor so that said insulation remains intact along an outer edge of said piercing means,
means, integral with an inner edge of each furcation, for abrading contact depressions into opposite sides of said electrical conductor, said abrading means and said force couple producing gastight connections between said connector and said electrical conductor upon repeated usage, and
means, integral with said base portion, for enabling a lateral yawing of said furcations as they engage said insulation covered electrical conductor, said piercing means, abrading means, and lateral yawing enabling means all lying along a common longitudinal axis of said connector, said enabling means including first and second oppositely directed generally V-shaped notches, roots of said notches extending into said base portion, a first side of each of said notches lying in a plane generally perpendicular to first and second planes containing said abrading means and a second side of said first notch and a second side of said second notch lying in first and second oppositely directed planes, respectively, which intersect at a point in said plane perpendicular to said first and second planes containing said abrading means.

4,062,615
ELECTRICAL CONTACT
John N. Navarro, Pasadena, Calif., assignor to Thomas & Betts Corporation, Elizabeth, N.J.
Filed Dec. 6, 1976, Ser. No. 748,231
Int. Cl.² H01R *9/08*
U.S. Cl. 339—98 **6 Claims**

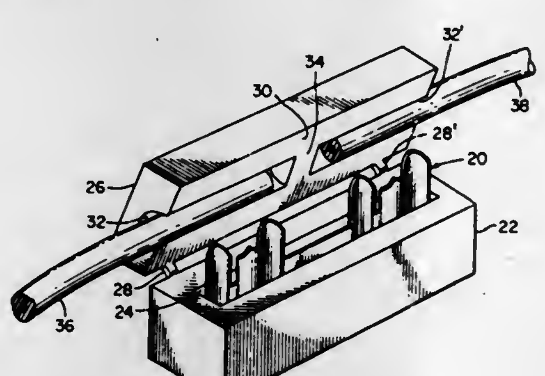

1. An electrical contact for joining two insulated conductors comprising: a continuous linear strip of electrically conductive metallic material having a flat central portion and undulating end portions, each of said end portions comprising a series of at least three serially connected segments each having upper edges converging to a peak at the longitudinal center of each said segment, and communicating with a side edge to provide a cutting surface extending from said peak along each of said upper edges and continuing along each of said side edges, said side edges between adjacent segments defining the sides of a slot for receiving the conductive portion of an insulated conductor therein, each of said slots lying along and bisected by a common central axis to provide an in-line wire receiving path, said side edges providing cutting surfaces for piercing the insulation about such insulated conductor, said end portions each being adapted to engage a severed end of a given insulated conductor to provide electrical continuity between such conductors, said segments undulating symmetrically about said common central axis.

4,062,616
FLAT FLEXIBLE CABLE CONNECTOR ASSEMBLY INCLUDING INSULATION PIERCING CONTACTS
Howard Richard Shaffer, Westminister, Md., and John Aaron Zimmerman, Jr., Hershey, Pa., assignors to AMP Incorporated, Harrisburg, Pa.
Filed Aug. 19, 1976, Ser. No. 715,770
Int. Cl.² H01R *13/38*
U.S. Cl. 339—99 R **13 Claims**

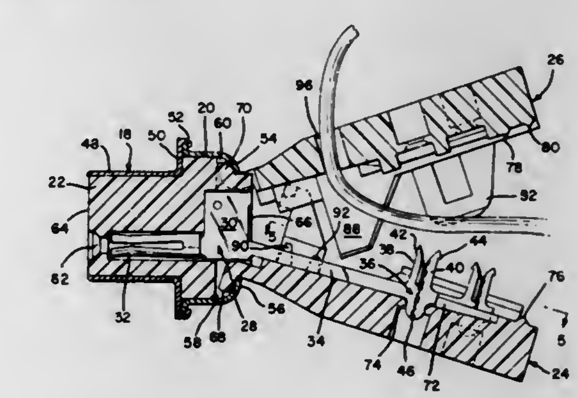

1. A connector assembly for terminating flat flexible cable having a plurality of insulated conductors comprising:
a contact block having a plurality of through passages therein;
a like plurality of contacts each positioned in a respective one of said passages, each said contact including a planar body portion, a matable terminal portion extending from one side of said body portion, a cantilever arm extending from another side of said body portion and lying substantially in the plane thereof, a forked projection on the free end of said arm, each said forked projection including at least two tines defining a plane offset with respect to the plane of said body portion and defining therebetween an insulation displacing slot, and at least one outwardly directed barb on the free end of each said tine;
a pair of mating housing members pivotally attached to said contact block and adapted to act against said contact arm and said cable to cause said projections to penetrate completely through the cable with the barbs lockingly engaging the opposite mating housing member whereby the conductors of said cable are entrapped and engaged by said tines;
a plurality of grooves in the mating face of one of said mating housing members, each groove adapted to frictionally engage respective arms of said contacts; and
a slot in the other of said mating housing members closely adjacent the pivotal attachment to said contact block for through passage of said cable whereby said connector is attached intermediate the ends of said cable in daisy chain fashion.

4,062,617
ELECTRICAL TEST CONNECTOR APPARATUS
Lennart B. Johnson, Milford, N.H., assignor to Teradyne, Inc., Boston, Mass.
Continuation of Ser. No. 623,549, Oct. 17, 1975, abandoned. This application Feb. 25, 1977, Ser. No. 771,953
Int. Cl.² H01R *13/54*
U.S. Cl. 339—75 M **1 Claim**

1. An electrical testing apparatus adapted to reliably test an electrical unit characterized by a group of unit contact surfaces which comprises
alignment means for predeterminedly positioning said unit relative to said apparatus,
a group of apparatus contact surfaces carried by said apparatus,
said unit contact surfaces and said apparatus contact surfaces being spaced from one another and extending in the same general direction during said positioning,
said unit contact surfaces being one of male or hollow circu-

lar in cross-section and said apparatus contact surfaces being the other of male or circular in cross-section,
and displacement means capable of producing relative movement between said unit contact surfaces and said apparatus contact surfaces in at least two directions to bring each unit contact surface into abutting relation

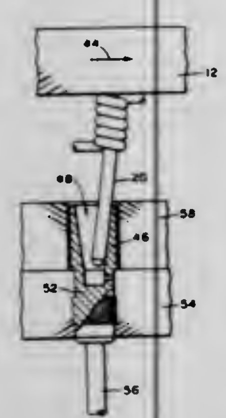

successively one at a time with a respective apparatus contact surface in two different generally tangential line contacts therebetween,
at least one of said contact surfaces being yieldably movable in the direction of said relative movement under the force applied to produce said relative movement.

4,062,618
SECURE OPTICAL MULTIPLEX COMMUNICATION SYSTEM
Peter Dennis Steensma, Midland Park, N.J., assignor to International Telephone and Telegraph Corporation, Nutley, N.J.
Filed May 28, 1976, Ser. No. 691,183
Int. Cl.² G02B *27/00;* H04B *9/00;* G02B *5/14*
U.S. Cl. 350—3.5 **10 Claims**

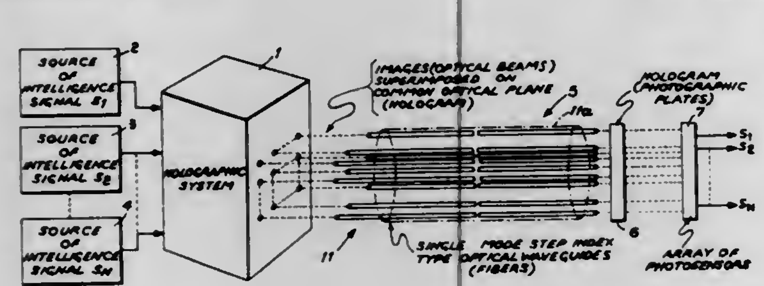

1. A secure optical multiplex communication system comprising:
a plurality of sources of intelligence signals to be multiplexed and transmitted;
a holographic system having at its output a given hologram on a first photographic plate, said holographic system being coupled to said plurality of sources to provide a plurality of spatially multiplexed optical beams on said first photographic plate each modulated by a different one of said signals of said plurality of sources;
an optical waveguide having one end thereof optically coupled to said first photographic plate for coherent transmission of said plurality of modulated spatially multiplexed optical beams to the other end of said waveguide;
a second photographic plate having said given hologram thereon optically coupled to said other end of said waveguide to reconstruct each of said plurality of modulated spatially multiplexed optical beams; and
an array of photosensors optically coupled to said second photographic plate to recover each of said signals of said plurality of sources from said reconstructed plurality of modulated spatially multiplexed optical beams.

4,062,619
VARIABLE BACKGROUND INTENSITY APPARATUS FOR IMAGING SYSTEMS
Robert Hoffman, 17 Copper Beech Place, Merrick, N.Y. 11566
Filed Mar. 25, 1975, Ser. No. 562,930
Int. Cl.² G02B *21/14*
U.S. Cl. 350—13 **18 Claims**

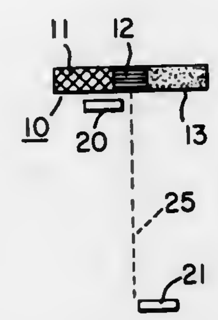

1. In an optical system particularly adapted for use in microscopy and useful for viewing typical objects, said system including a source of illumination, an aperture slit positioned above said source and means including a condenser and objective lens adapted to focus the image of said slit at a Fourier plane, the improvement therewith of apparatus for varying the background of a display associated with said system, comprising:
a. a modulator plate positioned at said plane and having different transmittance regions on a surface thereof, with one region normally adapted to recieve said image of said aperture slit, and
b. means coupled to said aperture slit to alter said position of said slit image to cause at least a portion thereof to impinge on another region of said modulator, whereby said background intensity is varied according to the portion of said slit image impinging on said another region as compared to the portion of said image impinging on said one region.

4,062,620
DEVICE FOR CONNECTING OPTICAL FIBERS
Claude Pirolli, Rueil Malmaison, France, assignor to Telecommunications Radioelectriques et Telephoniques T.R.T., Paris, France
Filed Mar. 11, 1976, Ser. No. 665,953
Claims priority, application France, Mar. 25, 1975, 75.09289
Int. Cl.² G02B *5/14*
U.S. Cl. 350—96 C **7 Claims**

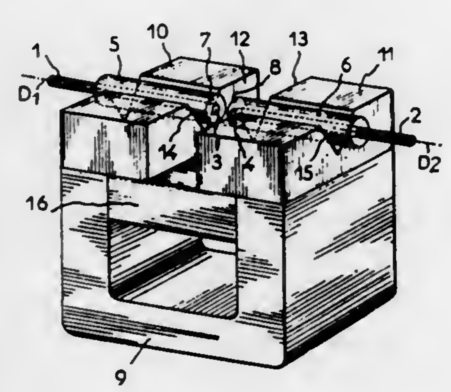

1. A device for connecting optical fibers, comprising a member of magnetic material secured to each of opposing ends of a pair of fibers to be connected, and magnetic means including spaced pole-shoes defining an air-gap therebetween each of said pole pieces having axially aligned recesses forming a guide for locating the members of magnetic material therein and thereby axially aligning the end faces of said fibers in the air gap formed by the said poleshoes, said magnetic means moving said fibers into abutting relationship in said air-gap whereby said fibers are connected to one another.

4,062,621
LARGE APERTURE EXTENDED RANGE ZOOM LENS
Andor A. Fleischman, Northbrook, Ill., assignor to Bell & Howell Company, Chicago, Ill.
Continuation-in-part of Ser. No. 625,965, Oct. 28, 1975, abandoned. This application July 12, 1976, Ser. No. 704,595
Int. Cl.² G02B *15/18*
U.S. Cl. 350—184 **2 Claims**

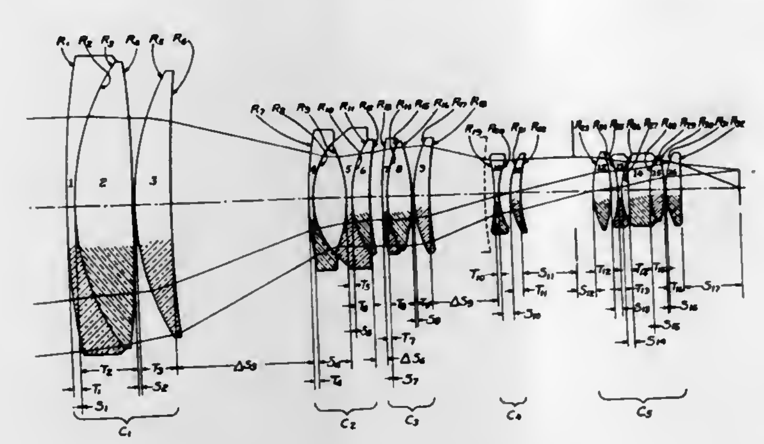

1. An optical system for a variable focal length lens of large effective aperture, which is focusable over an extended range, having substantially the following specification:

SYSTEM EFL			HALF ANGLE OF FIELD		
at W/A=7.22mm (.2835 in.)			27.36°		
at T/P=43.86mm (1.7268 in.)			4.46°		
at MID=19.25mm (.7579 in.)			10.02°		

LENS	RADII (mm.)	THICKNESS (mm.)	SPACINGS (mm.)	N_D	V
1	R_1= 166.0901 R_2=−45.7200	T_1=1.702		1.755	27.6
			S_1=0		
2	R_3=45.7200 R_4=233.4001	T_2=11.430		1.623	56.9
			S_2=.1016		
3	R_5=50.3428 R_6=−301.7523	T_3=7.112		1.651	56.2
			S_3=1.4910 at W/A 27.1882 at T/P 17.7851 at MID		
4	R_7=70.3580 R_8=−16.8656	T_4=0.800		1.639	55.4
			S_4=6.584		
5	R_9=−24.0030 R_{10}=−19.1008	T_5=0.800		1.620	60.3
			S_5=0		
6	R_{11}=19.1008 R_{12}=−59.9948	T_6=3.556		1.785	25.7
			S_6=38.3210 at W/A 2.7508 at T/P 17.1018 at MID		
7	R_{13}=53.9750 R_{14}=−21.3106	T_7=0.800		1.805	25.4
			S_7=0		
8	R_{15}=21.3106 R_{16} =31.6230	T_8=5.121		1.640	60.2
			R_{16}=31.6230 S_8=.1016		
9	R_{17}=23.2664 R_{18}=−101.5237	T_9=3.150		1.691	54.8
			S_9=1.7348 at W/A 11.6103 at T/P 6.6573 at MID		
10	R_{19}=−45.5168 R_{20}=−12.8016	T_{10}=0.711		1.691	54.8
			S_{10}=2.2758		
11	R_{21}=14.6431 R_{22}=−27.4320	T_{11}=2.091		1.805	25.4
			S_{11}=10.668 STOP S_{12}=3.556		
12	R_{23}=17.2720 R_{24}=30.4292	T_{12}=3.226		1.774	44.8
			S_{13}=1.6764		
13	R_{25}=−19.3040 R_{26}=−17.1196	T_{13}=1.711		1.805	25.4
			S_{14}=.8890		
14	R_{27}=173.1519 R_{28}=−16.5100	T_{14}=4.496	1.805	25.4	

-continued

SYSTEM EFL			HALF ANGLE OF FIELD		
at W/A=7.22mm (.2835 in.)			27.36°		
at T/P=43.86mm (1.7268 in.)			4.46°		
at MID=19.25mm (.7579 in.)			10.02°		

LENS	RADII (mm.)	THICKNESS (mm.)	SPACINGS (mm.)	N_D	V
			S_{15}=0		
15	R_{29}=16.5100 R_{30}=21.8034	T_{15}=2.794		1.744	44.8
			S_{16}=.1270		
16	R_{31}=14.9758 R_{32}=−424.1817	T_{16}=3.023		1.734	51.5
			S_{17}=11.277 BFL		

wherein the first column lists the lens elements numerically starting at the ray entrance side of the system; the second column lists the respective base radii R_1 to R_{32}; the third column lists the thicknesses $T_1 - T_{16}$ of the respective elements; the fourth column lists the axial spacings S_1 to S_{17} between the respective elements, and stop, and the image plane; and the fifth and sixth columns respectively list the index of refraction for the Sodium D line N_D and the dispersive index V of the optical materials of the respective elements.

4,062,622
SMALL SIZE RETROFOCUS WIDE ANGLE PHOTOGRAPHIC LENS
Takahiro Sugiyama, Tokyo, Japan, assignor to Asahi Kogaku Kogyo Kabushiki Kaisha, Tokyo, Japan
Filed May 19, 1976, Ser. No. 687,814
Claims priority, application Japan, May 22, 1975, 50-61293
Int. Cl.² G02B *9/64, 1/00*
U.S. Cl. 350—214 **6 Claims**

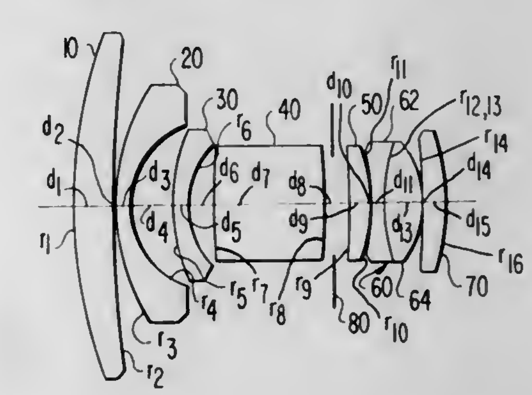

1. A small size retrofocus wide angle photographic lens system comprising seven groups of lenses consisting of a total of eight lens elements, in order of position from the object to the image side of the lens system: a positive meniscus lens convex to the object constituting the first group, a negative meniscus lens convex to the object constituting the second group, a negative meniscus lens convex to the object constituting the third group, a thick double convex positive lens constituting the fourth group, a positive meniscus lens convex to the image constituting the fifth group, a double concave negative lens and a double convex positive lens constituting the sixth group, said sixth group having a positive focal distance, and a positive meniscus lens convex to the object.

4,062,623
DEVICE FOR OBSERVING AN OBJECT
Akiyoshi Suzuki, Tokyo, and Maso Totsuka, Ohmiya, both of Japan, assignors to Canon Kabushiki Kaisha, Tokyo, Japan
Filed Mar. 30, 1976, Ser. No. 672,022
Claims priority, application Japan, Apr. 7, 1975, 50-42083
Int. Cl.² G02B *21/06*
U.S. Cl. 350—91 **6 Claims**

1. A device for photo-electrically scanning and observing an object having a flat reflection surface and an inclined surface

with a certain inclination with respect to the flat reflection surface, comprising:

a. a telecentric system including a telecentric lens, the optical axis of which is perpendicular to the flat reflection surface of said object and a clear aperture of predetermined size located on the focal plane of said telecentric lens;

b. first transmissive and reflective optical means disposed in a manner traversing the optical axis of the telecentric lens;

c. an illuminating optical system for forming a light source image on said focal plane smaller in size than said clear aperture through said first transmissive and reflective optical means;

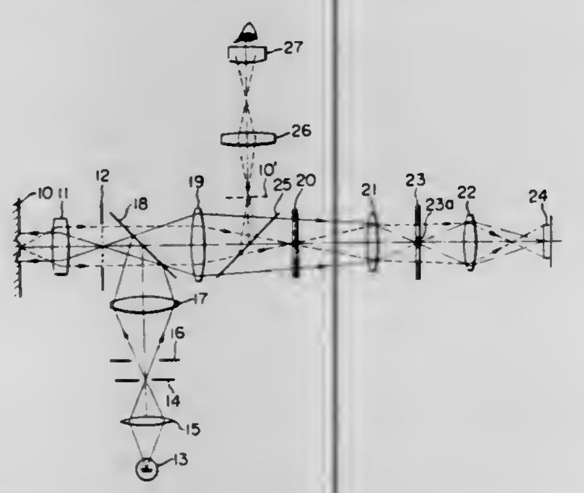

d. image focussing means disposed coaxial with the optical axis of the telecentric lens for imaging said focal plane and said object;

e. means for scanning the image of said object, said means being disposed on the image plane of said object;

f. optical filter means disposed at the position of the image of said focal plane for intercepting light from the flat reflective surface of said object, and for directing the light from the inclined reflection surface to photo-electric detecting means; and

g. second transmissive and reflective optical means interposed between said focal plane of said telecentric lens and the optical filter means for directing a part of the light coming from the telecentric lens to an observation optical means.

4,062,624

CONNECTOR FOR OPTICAL FIBRE

Alfred Paul Hammer, Paris, France, assignor to Thomson-CSF, Paris, France

Filed Nov. 26, 1975, Ser. No. 635,775

Claims priority, application France, Nov. 29, 1974, 74.39189

Int. Cl.² G02B *5/14*

U.S. Cl. 350—96 C **9 Claims**

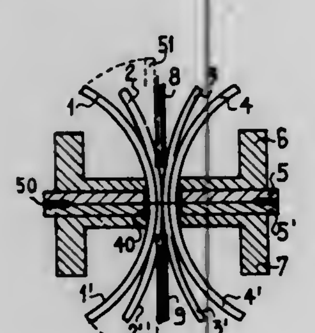

1. A connector for connecting two optical fibres, comprising means for centering the free end of each fibre wherein said means are constituted by a bunch of six cylindrical rods made of an elastic material and having the same diameter as the fibres, said rods in the bunch being connected, tangentially in relation to one another and at one of their ends, to an annular support clamping means constituted by a mobile sleeve concentric with the axis of the bunch, being provided in order to effect closing.

4,062,625

REFLEX COPIER LENS

Andor A. Fleischman, Northbrook, and Walter R. Linke, Chicago, both of Ill., assignors to Bell & Howell Company, Chicago, Ill.

Filed Sept. 3, 1976, Ser. No. 720,282

Int. Cl.² G02B *17/06;* G02B *3/04*

U.S. Cl. 350—202 **1 Claim**

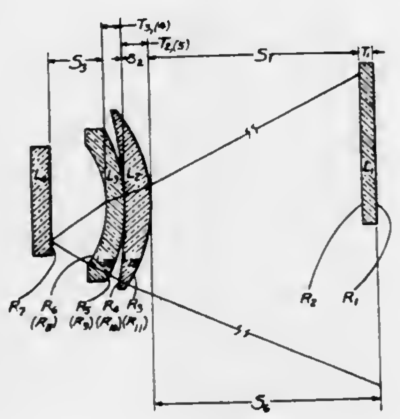

1. An optical system of a reflex copier lens including a combination of glass and plastic elements, at least one of the elements being plastic and having aspheric surfaces, the system having substantially the following specifications:

EFL = 7.5436 inches (191.61mm)
Half Angle of Field = 25.34 degrees
Aperture = f/5.03
(All dimensions in Inches)

Lens	Radii	Thickness	Spacing	N_D	V
L_1	R_1 = INF.	T_1 = .2350		1.522	59.5
	R_2 = INF.		S_1 = .0100		
L_2	R_3 = +2.3490	T_2 = .4046		1.522	59.5
	R_4 = −6.3260		S_2 = .0100		
L_3	*R_5 = +2.52189	T_3 = .3197		1.592	30.4
	*R_6 = −1.72278		S_3 = .8906		
L_4	R_7 = −55.9411	MIRROR STOP			
			S_4 = .8966		
L_{3R}	*R_8 = −1.72278	T_4 = .3197		1.592	30.4
	*R_9 = +2.52189				
			S_5 = .0100		
L_{2R}	R_{10} = −6.3260	T_5 = .4046		1.522	59.5
	R_{11} = +2.3490				
			S_6 = 13.3206 BFL		

wherein the first column lists the lens elements numerically, the second column lists the respective radii and vertex radii of the aspheric surfaces *R_5, *R_6, *R_7, and *R_8 of the elements, using the convention that convex surfaces have positive radii and concave surfaces have negative radii, the third column lists the respective thickness of the elements, the fourth column lists the axial spacings between adjacent elements and the film plane, and the fifth and sixth columns list respectively the refractive and dispersive indices of the optical materials of the lens system.

4,062,626

LIQUID CRYSTAL DISPLAY DEVICE

Hideaki Kawakami, Mito; Yutaka Yoneda, Hitachi; Yoshiharu Nagae, Hitachi, and Masaaki Kitazima, Hitachi, all of Japan, assignors to Hitachi, Ltd., Japan

Filed Sept. 5, 1975, Ser. No. 610,781

Claims priority, application Japan, Sept. 20, 1974, 49-107746; Oct. 16, 1974, 49-118128

Int. Cl.² G02F *1/18;* G08B *5/36;* G09F *9/32*

U.S. Cl. 350—160 LC **17 Claims**

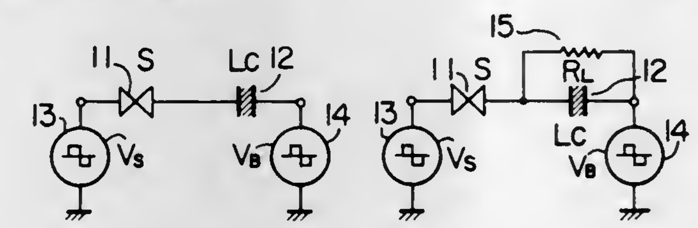

1. A liquid crystal display device comprising:

a series circuit of a liquid crystal cell and an electronic switch, said electronic switch having a double threshold characteristic in which the resistance of said electronic switch is changed over from a high level to a low level when the absolute value of a voltage applied thereacross exceeds a predetermined value;

means for applying an ac signal voltage to one end of said series circuit; and

means for applying an ac bias voltage to the other end of said series circuit,

whereby said electronic switch is controlled depending on the relation between the phase of said as signal voltage and that of said ac bias voltage so that said liquid crystal cell is excited for display when the resistance of said electronic switch takes the low level.

4,062,627

FLEXIBLE CONTACT LENS

Georges Wajs, Ivry, and William Lenne, Gagny, both of France, assignors to Essilor International (Compagnie Generale d'Optique S.A.), Joinville-le-Pont, France

Continuation of Ser. No. 417,250, Nov. 19, 1973, abandoned. This application Nov. 18, 1975, Ser. No. 633,031

Claims priority, application France, Aug. 6, 1973, 73.28665

The portion of the term of this patent subsequent to May 25, 1993, has been disclaimed.

Int. Cl.² G02C *7/04*

U.S. Cl. 351—160 **2 Claims**

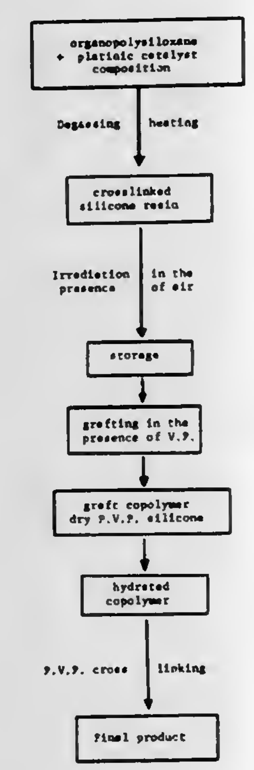

1. A contact lens of generally concavo-convex shape adapted to be worn on the cornea, comprising a shaped cross-linked graft copolymer of silicone and polyvinylpyrrolidone having water in an amount sufficient for imparting optical transparency to the lens, said lens being characterized by having irradiation induced crosslinking of said polyvinylpyrrolidone to an extent equivalent to that produced by a radiation dosage of about 0.1 to 20 m rads, to impart substantial hydrophilic and lipophobic properties to said lens thereby substantially eliminating rupturing of a pre-corneal lachrymal film containing lipidic elements engaged by said lens, said cross-linked polyvinylpyrrolidone being formed integrally with said lens without interfering with satisfactory permeability and optical properties of the lens, said lens having a maximum water absorption of 10% by weight of said lens and a refractive index after said water absorption of about 1.39 to 1.45.

4,062,628

BLACK-AND-WHITE DIFFRACTIVE SUBTRACTIVE LIGHT FILTER

Michael Thomas Gale, Gattikon, Switzerland, assignor to RCA Corporation, New York, N.Y.

Filed Mar. 29, 1976, Ser. No. 671,105

Claims priority, application United Kingdom, Mar. 9, 1976, 1917/76

Int. Cl.² G02B *5/18, 5/22*

U.S. Cl. 350—162 R **12 Claims**

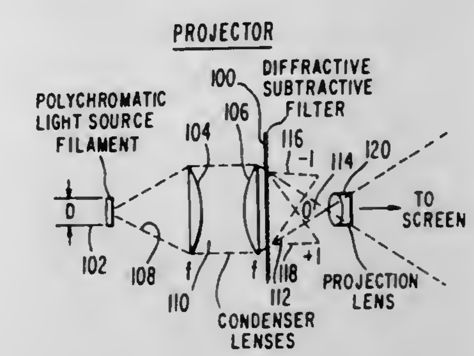

1. A diffractive subtractive light filter including at east one diffractive structure, said diffractive structure comprising at least two superimposed, angularly-spaced, substantially sine-wave profile phase gratings having a line spacing sufficient to permit the separation of substantially all higher-diffraction-order light from imaged zero-diffraction-order light, any of said phase gratings having an optical peak-to-peak amplitude of a selected value which provides a zero-diffraction-order-light transmittance wavelength selectivity characteristic which exhibits a minimum zero-diffrction-order-light transmittance at a wavelength within the visible wavelength spectrum; the improvement therein:

wherein the optical peak-to-peak amplitude of each of said phase gratings has a sufficiently different selected value to render the wavelength selectivity, and hence the color selectivity, of the zero-diffraction-order light transmittance of said diffractive structure over the visible wavelength spectrum smaller than that which could be obtained if the optical peak-to-peak amplitude of each of said phase gratings all had substantially the same selected value.

4,062,629

PROGRESSIVE POWER OPHTHALMIC LENS HAVING A PLURALITY OF VIEWING ZONE WITH DISCONTINUOUS POWER VARIATIONS THEREBETWEEN

John Talley Winthrop, Wellesley, Mass., assignor to American Optical Corporation, Southbridge, Mass.

Continuation-in-part of Ser. No. 389,043, Aug. 16, 1973, abandoned. This application Dec. 8, 1975, Ser. No. 638,869

Int. Cl.² G02C *7/06*

U.S. Cl. 351—169 **14 Claims**

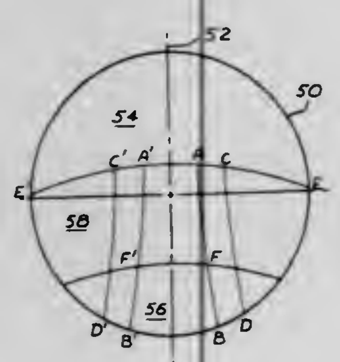

1. An ophthalmic lens comprising a lens body having a first refractive surface viewing zone thereon characterized by
- a smooth, unbroken principal meridional curve having continuously varying slope lying along the refractive surface viewing zone in a generally vertical direction and dividing the refractive surface viewing zone into two similar lateral portions, the curvature of the principal meridional curve varying progressively from point to point therealong to provide a predetermined dioptric focal power at each such point according to a predetermined law, the dioptric focal power increasing generally from top to bottom of the viewing zone along the principal meridional curve, and being characterized further by having cross curves defined on the refractive surface viewing zone by planes perpendicular to the principal meridional curve, the curvatures of the cross curves at their points of intersection with the principal meridional curve being respectively equal to the curvature of the meridional curve at the point of intersection,
- the first refractive surface viewing zone defined by a power range varying from a first dioptric focal power at the top of the viewing zone to a second, higher dioptric focal power at the bottom of the viewing zone, the viewing zone being divided into at least three laterally disposed areas,
- a first one of the three areas being centrally disposed in the viewing zone, extending vertically therethrough, and having the principal meridional curve passing through the center thereof,
- the two outermost of the three areas being disposed at the lateral peripheries of the viewing zone and each having a surface which comprises a portion of a surface of revolution whose axis of revolution is vertical and lies in the meridional plane whereby said lateral periphery surface is so curved that the condition $\delta^2 f/\delta x\ \delta y = 0$ is fulfilled when x and y are the coordinates in the vertical and horizontal directions respectively of said outermost areas and f is the distance of the refractive surfaces from the x-y plane whereby skew distortion is so optically compensated that at all points on said outermost areas the principal axes of astigmatism lie in vertical and horizontal planes which are parallel to the x and y axes respectively to permit a wearer of the lens to perceive horizontal and vertical lines in the visual environment as being horizontal and vertical; and
- a second viewing zone in vertical juxtaposition to the first viewing zone, the second one of the viewing zones having a constant dioptric focal power therethrough, there being a downwardly positive discontinuity in dioptric focal power of less than about 0.5 diopters at the boundary between the two viewing zones.

4,062,630

TELEPHOTO LENS SYSTEM

Sei Matsui, Kawasaki, Japan, assignor to Nippon Kogaku K.K., Tokyo, Japan

Filed Mar. 11, 1976, Ser. No. 665,867

Claims priority, application Japan, Mar. 17, 1975, 50-32020; Mar. 17, 1975, 50-32021; Oct. 31, 1975, 50-130487

Int. Cl.² G02B *13/02*

U.S. Cl. 350—223 **8 Claims**

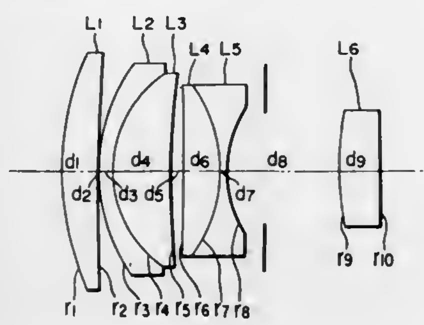

1. A telephoto lens system having an aperture ratio of approximately 1:2 and a telephoto ratio of approximately 1.0, the system comprising four members successively arranged, from the object side of the system to the image side, as follows:
- a. a first lens member including a positive meniscus lens whose convex surface faces the object side;
- b. a second lens member having positive refractive power and including a negative meniscus lens whose convex surface faces the object side, and a positive meniscus lens cemented to the negative meniscus lens;
- c. a third lens member having negative refractive power and including a positive lens whose more curved surface faces the image side, and a biconcave lens cemented to the positive lens; and
- d. a fourth lens member including a positive lens.

4,062,631

SHEET HANDLING OF A COPYING MACHINE

Yasuhiko Ichikawa, and Fumiyasu Hayakawa, both of Hachioji, Japan, assignors to Konishiroku Photo Industry Co., Ltd., Nihonbashi-Muro, Japan

Filed Mar. 6, 1975, Ser. No. 556,115

Claims priority, application Japan, Mar. 7, 1974, 49-26939

Int. Cl.² G03B *15/22*

U.S. Cl. 355—3 R **4 Claims**

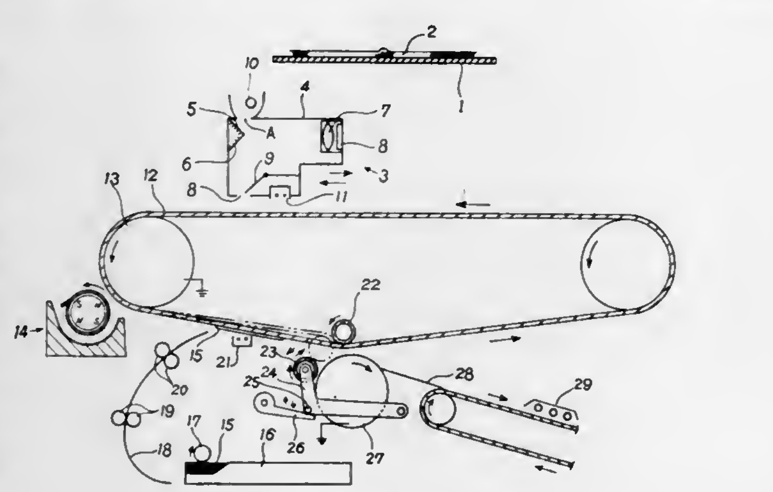

1. A method of separating a transfer sheet from an image bearing member electrostatically adhered thereto for an electrostatic recording system of transfer type comprising the steps of forming a toner image on said image bearing member, placing a transfer sheet in contact with said image bearing member, transferring electrostatically said image to said transfer sheet placed in contact with said member, bending said image bearing member together with said transfer sheet at a separation position subsequent to an image transfer position when the front edge of said transfer sheet reaches or passes said separation position by a substantially small distance, pressing positively one of separating members against the image bearing member together with the transfer sheet, whereby said transfer sheet is separated from the surface of said member due to toughness of the sheet, said transfer sheet being separated forcibly from the surface of said image bearing member, said transfer sheet being held in close contact with said image bearing member by electrostatically attractive forces, and including the step of placing a pair of separating members at said separation position, one of said separating members being located at one side of image bearing member and the other separating member being located at the other side of said image bearing member, at least one of said separating members being pressed against said image bearing member together with said transfer sheet when said front edge of said transfer sheet reaches or passes said separation position.

4,062,632

CONSTANT MODULATION INDEX TECHNIQUE FOR MEASURING THE DERIVATIVES OF DEVICE PARAMETERS

Richard Wayne Dixon, Bernardsville, N.J., assignor to Bell Telephone Laboratories, Incorporated, Murray Hill, N.J.

Filed June 21, 1976, Ser. No. 698,185

Int. Cl.² G01N *21/22;* **G01R** *21/14, 19/00*

U.S. Cl. 356—72 **10 Claims**

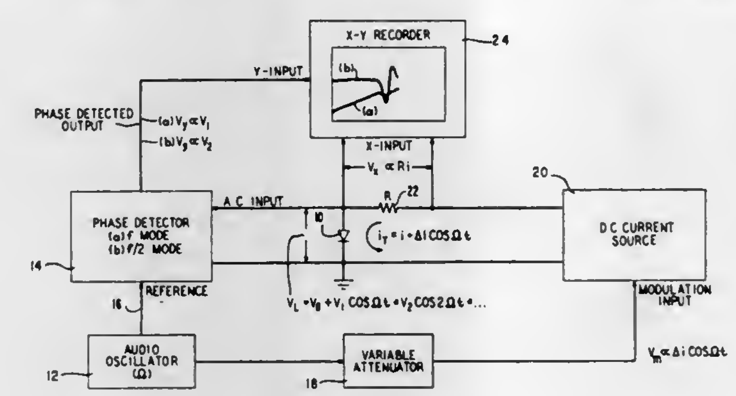

1. A method for generating a product of an n^{th} order derivative of a device parameter F with respect to current flowing through the device times the n^{th} power of the current comprising the steps of:
- a. applying to said device a variable current which has both a d.c. component i and an a.c. component Δi which oscillates at a frequency Ω,
- b. maintaining substantially constant the ratio $i/\Delta i$,
- c. detecting a signal produced in response to the flow of said current through said device, and
- d. extracting from said signal the frequency component thereof which corresponds to the desired current-derivative product.

4,062,633

O-RING INSPECTION METHOD AND APPARATUS

Thomas T. Stapleton, Bloomfield Hills, and Herbert E. Rober, Roseville, both of Mich., assignors to General Motors Corporation, Detroit, Mich.

Filed Sept. 27, 1976, Ser. No. 726,776

Int. Cl.² G01B *11/10*

U.S. Cl. 356—159 **3 Claims**

1. A method for inspecting O-rings by measuring the cross-sectional diameter thereof comprising
- driving an O-ring through a twisted path by stretching and twisting the O-ring over a pair of spaced mandrels, the mandrels being crossed at an angle to effect twisting of the O-ring and rotating one of the mandrels to progressively move the O-ring through a twisted path,
- optically sensing the cross-sectional diameter at a plurality of locations spaced along the path of the O-ring such that due to the twist of the O-ring, a different angular aspect of the O-ring cross section is presented for inspection at each said location, and

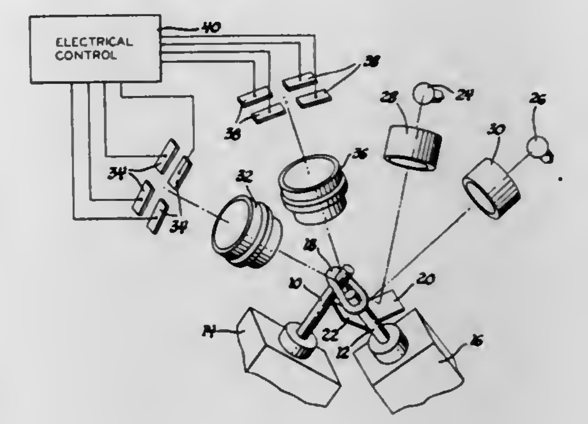

- repetitively sampling the said diameter at each said location during the progressive movement of the O-ring thereby obtaining a plurality of diameter measurement of O-ring cross section at each location.

4,062,634

SYSTEM FOR CONTROLLING ATTITUDE OF LASER BEAM PLANE

Joseph F. Rando, Cupertino; Michael E. Kahn, Palo Alto; Thomas E. Heumann, Atherton, and Scott S. Luebbers, Cupertino, all of Calif., assignors to Spectra-Physics, Inc., Mountain View, Calif.

Filed Feb. 10, 1975, Ser. No. 548,608

Int. Cl.² G01B *11/26*

U.S. Cl. 356—248 **21 Claims**

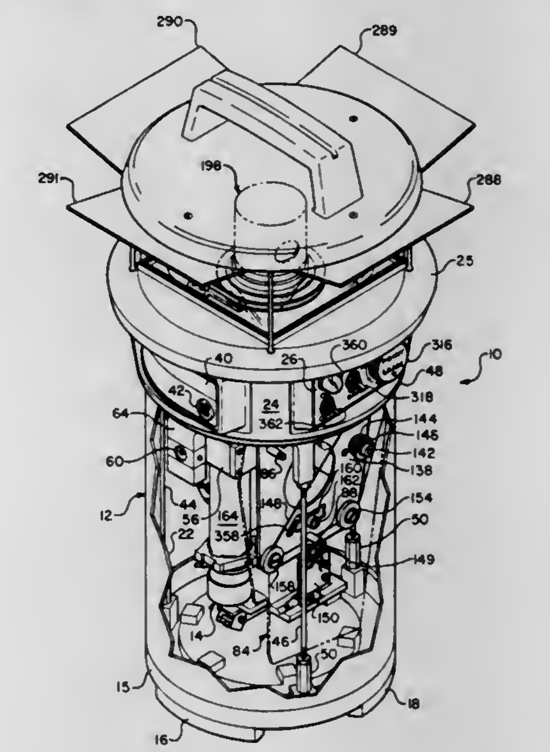

1. In apparatus for projecting a laser beam in a plane which has a pre-determined orientation with respect to a vertical axis, the combination of a housing, a gimbal frame mounted on the housing for pivotal movement about a Y-axis, a chassis mounted on the gimbal frame for pivotal movement about an X-axis which orthogonally intersects said Y-axis, laser beam generating means carried on said chassis, optical means carried on said chassis for routing said laser beam in a path along a Z-axis which is orthogonal to said X and Y axes and thereafter projecting the beam in a plane which is orthogonal to said Z-axis, Y-axis control means including first level means mounted on the chassis for sensing the orientation thereof about said Y-axis with respect to a vertical axis, together with first operating means driveably connected between said gimbal frame and the housing for pivoting said gimbal frame about the Y-axis to a position at which the chassis is at a pre-determined

orientation with respect to a vertical axis, and X-axis control means including second level means mounted on the chassis for sensing the orientation thereof about said X-axis with respect to a vertical axis, together with second operating means driveably connected between said chassis and the gimbal frame for pivoting the chassis about the X-axis to a position at which the chassis is at a pre-determined orientation with respect to a vertical axis.

4,062,635
AUTOMATIC TOOTH-PASTE-SUPPLYING TOOTH BRUSH
Wu Teh-Sheng, No. 126 Chung Kung Road, Hsias Kang Shien (812), China /Taiwan
Filed Feb. 2, 1976, Ser. No. 654,649
Int. Cl.² B43K *5/06*
U.S. Cl. 401—175 **5 Claims**

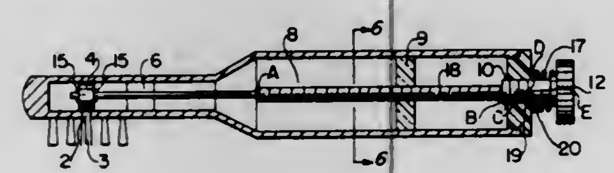

1. A device which comprises in combination, a brush-head disposed onto a handle portion, said handle portion having a container for dispensing a viscous material through a passage therebetween, said brush-head having bristles projecting therefrom, an aperture disposed in the brush-head relative the bristles and in communication with said passage, a partially threaded shaft disposed in the container and passage, said shaft having a plug movably disposed to open and close said aperture, said aperture being disposed perpendicular to the direction of travel of the plug, the aperture being disposed through the wall of the brush-head containing the bristles, said plug being disposed for limited open and close movement in the area of the aperture and within a channel positioned into the brush-head, a follower movable on said partially threaded shaft for forcing the viscous material from the container and to said passage, a knob externally disposed on the container, and means interconnecting said knob and said shaft whereby upon rotation of said knob, said plug and said follower are moved.

4,062,636
ELONGATE CYLINDRICAL MEMBERS SECUREMENT
Hans Jardin, Krailling, and Johann Ofner, Pucheim-Ort, both of Germany, assignors to Webasto-Werk W. Baier GmbH & Co., Germany
Filed Mar. 8, 1976, Ser. No. 664,677
Claims priority, application Germany, Mar. 17, 1975, 7508398[U]
Int. Cl.² B25G *3/00*
U.S. Cl. 403—13 **9 Claims**

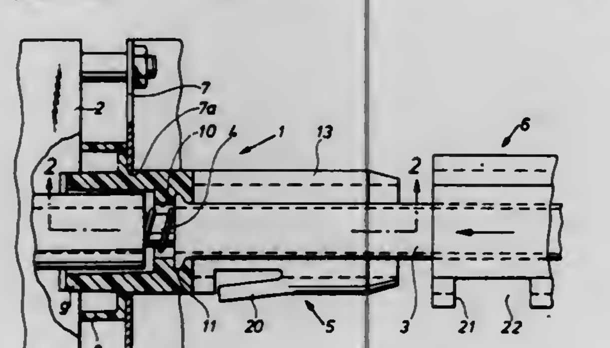

1. A locating member for securing a tube to a support comprising two body portions having complementary part-cylindrical channels of semi-circular cross-section for closely accommodating said tube,
means on one of said portions for securing said one of said portions to said support, said one portion having means for holding said tube against relative axial movement,
one of said portions having a pair of opposed radially-extending ridges and the other of said portions having a pair of complementary axially extending grooves for slidably receiving said ridges on axial movement of one portion relative to the other from a disassembled to an assembled configuration where said tube is fixed between said portions in an axial as well as in radial direction, and
locking means on the portions to restrain relative axial movement of the portions from their assembled towards their disassembled positions.

4,062,637
STEERING LINKAGE AND TIE ROD ASSEMBLY
William D. Allison, Grosse Pointe Farms, Mich., assignor to Ford Motor Company, Dearborn, Mich.
Filed July 7, 1975, Ser. No. 593,807
Int. Cl.² F16C *11/06*
U.S. Cl. 403—151 **1 Claim**

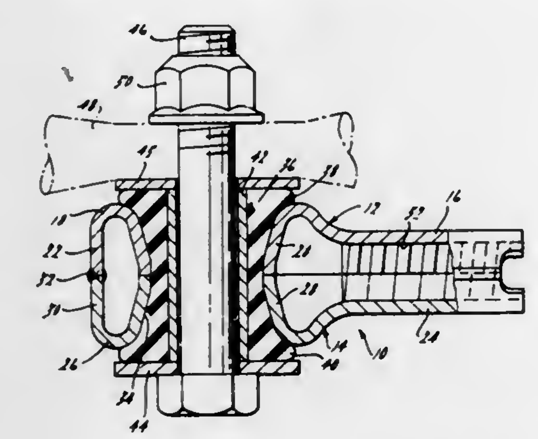

1. A tie rod end assembly having first and second sheet metal housing parts of substantially identical configuration;
each of said housing parts having an elongated stem portion with a generally semi-cylindrical wall;
each of said housing parts having an eye portion with a generally channel shape in cross section;
said eye portions each being defined by an annulr frusto-conical wall and an outer wall that is a continuation of said semi-cylindrical wall;
said first housing part being arranged with the edges of its said semi-cylindrical wall and said outer wall in abutting relationship to the edges of said semi-cylindrical wall and said outer wall of said second housing part;
a weldment interconnecting said abutting edges of said semi-cylindrical walls and said outer walls;
said frusto-conical walls of said first and second housing parts defining a convergent-divergent opening;
an annular elastomeric element positioned in said convergent-divergent opening;
said elastomeric element having radially extending flanges at each of its ends that extend radially beyond the ends of said convergent-divergent opening;
a sleeve positioned within said elastomeric element constructed to limit the compression of said elastomeric element;
fastener means positioned within said sleeve and constructed to be connected to a steering member;
said stem portions of said first and second housing parts being internally threaded for attachment to another steering member.

4,062,638
TURBINE WHEEL WITH SHEAR CONFIGURED STRESS DISCONTINUITY
Beuford C. Hall, Jr., Indianapolis, Ind., assignor to General Motors Corporation, Detroit, Mich.
Filed Sept. 16, 1976, Ser. No. 723,802
Int. Cl.² F01D *5/02*
U.S. Cl. 416—244 A **3 Claims**

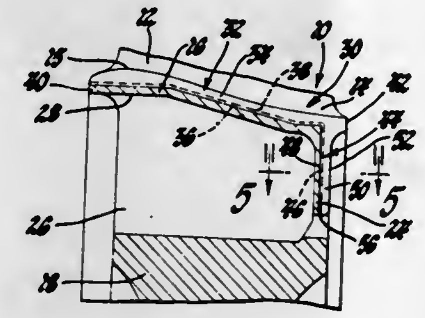

1. An integrally cast turbine wheel assembly comprising an annular, continuously formed wheel rim, a wheel disc integrally connected to said rim and extending radially inwardly thereof, a plurality of blades formed integrally of said rim and extending radially outwardly thereof, a web segment on said disc, means including a first pair of grooves formed in said web segment for defining a radially extending structural discontinuity through said web segment, said radially extending structural discontinuity having a segment thereon that will break apart in response to tangential compressive strain in said disc for relief thereof, means including a second pair of grooves formed in said rim for defining an axially extending structural discontinuity in said rim, said axially extending structural discontinuity having a segment that will break apart in response to tangential compressive strain in said rim for relief thereof.

4,062,639
FLUID MOTOR-DRIVEN PUMP USING FLUID PRESSURE TO SET POSITION OF PILOT VALVE
George D. Conlee, Cedar Falls, Iowa, assignor to The Hotsy Corporation, Humboldt, Iowa
Continuation of Ser. No. 521,250, Nov. 6, 1974, abandoned. This application Apr. 15, 1976, Ser. No. 677,487
Int. Cl.² F04B *17/00, 35/00;* **F01L** *25/02*
U.S. Cl. 417—404 **4 Claims**

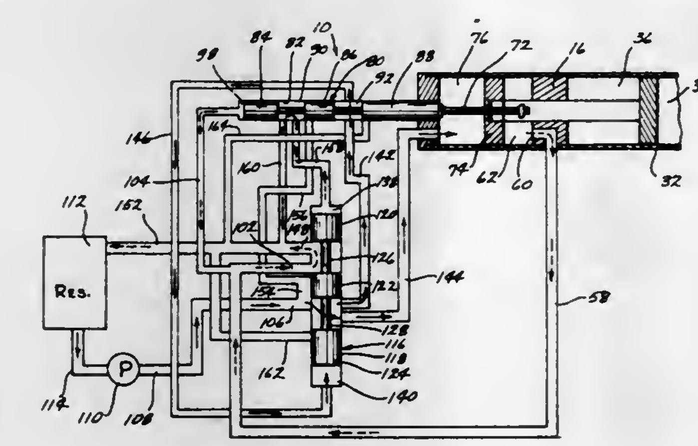

1. A fluid motor-driven pump comprising,
a pump work piston operating within a pump work chamber provided with inlet and outlet means, said pump work piston drivingly connected to a fluid motor,
said fluid motor comprising a motor piston fluidly movable in a cylinder alternately in opposite directions between first and second positions and having chambers on opposite sides thereof,
a pilot valve connected to said motor piston by a lost motion means and adapted to be physically moved alternately in opposite directions by said motor piston towards first and second positions,
a main valve adapted to be fluidly moved alternately in opposite directions between first and second positions,
a motor pump in fluid communication with said chambers through said main valve to move said motor piston between said first and second positions, and said main valve through said pilot valve to move said main vlave between said first and second positions, and said pilot valve through said main valve to move said pilot valve towards said first and second positions,
said piston being movable in one direction towards said first position by said motor pump fluid being in communication with one of said chambers, through said main valve when in said one position, to engagement with said pilot valve to move said pilot valve in said one direction and thereby place said motor pump in fluid communication through said pilot valve with said main valve to move said main valve to said second position whereupon said motor pump is placed in fluid communication through said main valve with the other chamber and said pilot valve to thereby fluidly move said pilot valve further in said one direction to said one position while moving said piston in the opposite direction relative to said pilot valve towards said second position for said motor piston whereupon said motor piston engages said pilot valve to move said pilot valve in the other direction and thereby place said motor pump in fluid communication through said pilot valve with said main valve to move said main valve to said one position whereupon said motor pump is placed in fluid communication through said main valve with said one chamber and said pilot valve to thereby fluidly move said pilot valve further in said other direction to said second position while moving said motor piston in said one direction towards said first position which is opposite the direction said pilot valve is moving.

4,062,640
METHOD AND MEANS FOR CONTROLLING LONG STROKE PUMPING UNITS
Robert H. Gault, Midland, Tex., assignor to Bethlehem Steel Corporation, Bethlehem, Pa.
Filed Sept. 24, 1976, Ser. No. 726,387
Int. Cl.² F04B *35/04*
U.S. Cl. 417—415 **9 Claims**

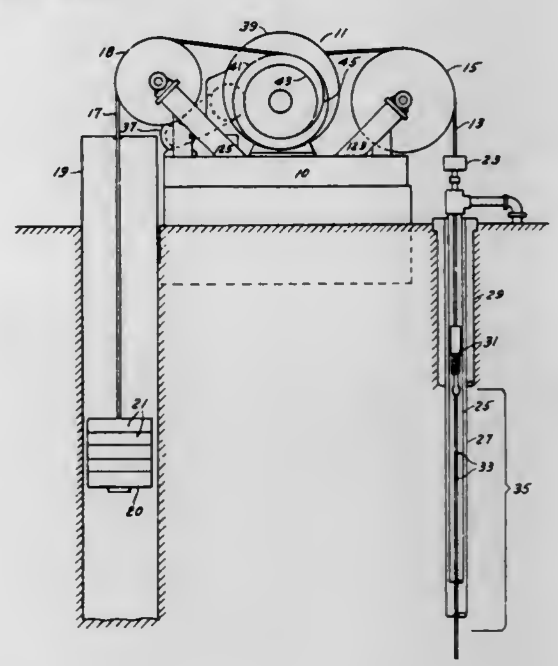

1. A method of operating an oil well pumping apparatus in which a prime mover applies motive power to the apparatus only during the central portion of the pumping cycle comprising:
a. determining the maximum load condition of the pumping apparatus during the initial portion of each upstroke of the apparatus, and

b. energizing the prime mover means immediately after the maximum load condition has occurred.

6. In an oil well pumping apparatus, control means for initiating operation of a prime mover to drive said apparatus comprising:

a. first means to determine when the downstorke has ended,

b. second means to determine when turn around has occurred and motion has been initiated in the upstroke direction,

c. third means to determine when a maximum load value has occurred and the load has just started to decrease, and

d. fourth means to energize the prime mover in the upstroke direction when each of the first, second and third means have detected their respective events.

4,062,641
AGGLOMERATION UNIT
Svend Hovmand, Horsholm, and Erik Dankvard Sorensen, Skovlunde, both of Denmark, assignors to A/S Niro Atomizer, Soborg, Denmark
Filed Oct. 18, 1976, Ser. No. 733,172
Claims priority, application Denmark, July 9, 1976, 3122/76
Int. Cl.^{2} B29J *1/00*
U.S. Cl. 425—6 **3 Claims**

1. Agglomerating unit comprising a chamber (1) having means defining a conical, downwardly narrowing portion of the chamber (2), at the top of the chambers means defining an upper stationary annular portion of the chamber (3) which at least at its lower end is of circular cross-section of substantially the same diameter as the largest diameter of the conical portion closely adjacent thereto and coaxial therewith, means defining a lower stationary portion of the chamber (4) disposed below said conical portion, which at least at its upper end is of circular cross-section of substantially the same diameter as the smallest diameter of the conical portion closely adjacent thereto and coaxial therewith, an atomizer wheel (6) disposed coaxially in said chamber and connected with at least one pipe means (7,8) or flowing wetting liquid to said atomizer wheel and an axial powder injection pipe (9) extending upwardly in said chamber and terminating in the region below said atomizer wheel, wherein only said means defining a conical portion

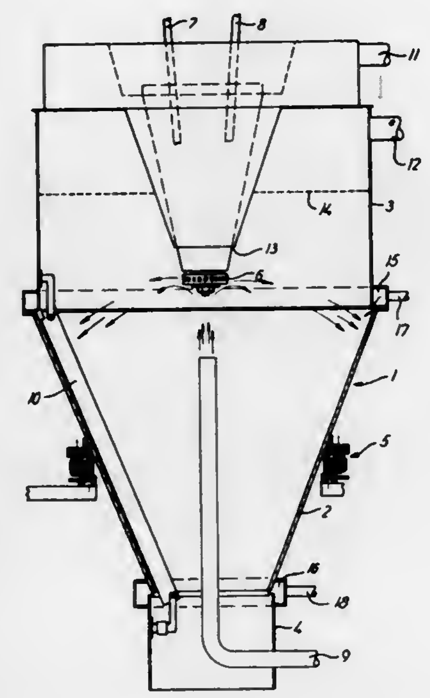

(2) is mounted for rotation around its axis, and a stationary scraper (1) fixedly secured to said means defining an upper portion (3) and to said means defining a lower portion (4) said scraper extending downwardly to at least the lower edge of said conical portion in close proximity to the inner surface of said conical portion.

CHEMICAL

4,062,642
PROCESS FOR DYEING AND PRINTING SYNTHETIC FIBER MATERIALS
Walter Deucker, Neuenhain, Taunus, and Rudolf Löwenfeld, Buchschlag, both of Germany, assignors to Hoechst Aktiengesellschaft, Frankfurt am Main, Germany
Filed June 1, 1976, Ser. No. 691,846
Claims priority, application Germany, June 3, 1975, 2524481
Int. Cl.^{2} D06P *1/38;* **C09B** *29/36*
U.S. Cl. 8—1 UA **7 Claims**

1. Process for the dyeing and printing of synthetic fibrous materials, wherein the said fibrous materials are treated with an aqueous dispersion, an aqueous padding liquor or with a solution in an organic solvent of at least one dyestuff of the formula

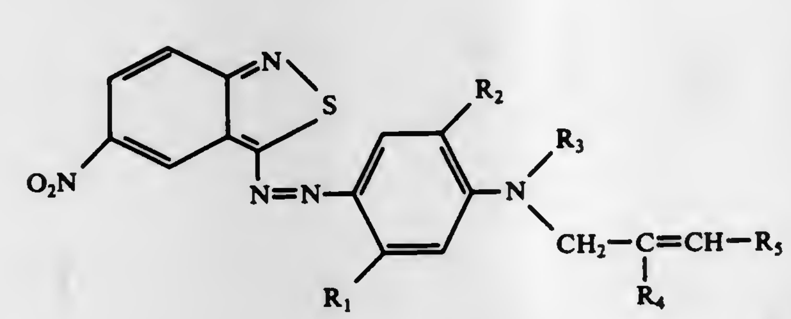

in which R_1 represents hydrogen, chlorine, lower alkyl or —NH—COlower alkyl, R_2 represents hydrogen, lower alkyl or lower alkoxy, R_3 represents lower alkyl, lower alkylene-OH, lower-alkylene-CN, $—CH_2—CBr{=}CH_2$,

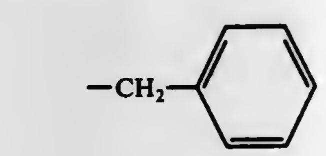

or lower-alkylene-COO-lower alkyl, R_4 represents hydrogen, bromine or lower alkyl, and R_5 represents hydrogen, lower alkyl or phenyl.

4,062,643
PRINTING PROCESS ASSISTED BY ALKANOLS OF 5 TO 8 CARBON ATOMS, UREA AND MINERAL OIL
Günther Boehmke, and Richard Schwaebel, both of Leverkusen, Germany, assignors to Bayer Aktiengesellschaft, Leverkusen, Germany
Filed Nov. 3, 1972, Ser. No. 303,402
Claims priority, application Germany, Nov. 5, 1971, 2154998
Int. Cl.^{2} D06P *1/651*
U.S. Cl. 8—1 A **6 Claims**

1. In the process for printing cellulosic fibre materials with reactive dyestuffs and/or direct dyestuffs using emulsion thickeners, the improvement comprising using emulsion printing pastes which contain, in addition to the dyestuffs and the alkali required for fixing the reactive dyes

a. 0.4 to 2% by weight of an alkali salt of a saturated or unsaturated fatty acid having 8 to 22 carbon atoms, ammonium salt of a saturated or unsaturated fatty acid having 8 to 22 carbon atoms or a mixture of said salts;

b. 1.5 to 4% by weight of an aliphatic alcohol having 5 to 18 carbon atoms;

c. 2 to 4.5% by weight of a largely straight-chain, liquid paraffin hydrocarbon;

d. 5 to 18% by weight urea; and

e. 0 to 0.5% by weight of a salt comprising the alkali, ammonium, monoethanolamine, diethanolamine, triethanolamine, propanolamine or cyclohexylamine salt of a sulfonic acid wherein said sulfonic acid contains a substantially unbranched alkyl chain and is selected for the group consisting of n-alkanesulfonic acids, n-alkylbenzenesulfonic acids, α-sulfofatty acid esters and acyl taurides.

4,062,644
TRANSFER INK AND METHOD OF USING SAME
John R. Sponaes, Metuchen, and Wilhelm P. Kutsch, Colonia, both of N.J., assignors to Graphic Magicians, Inc., New York, N.Y.
Filed Mar. 30, 1976, Ser. No. 672,025
Int. Cl.^{2} F41H *1/02, 1/04*
U.S. Cl. 8—2.5 A **2 Claims**

1. The method of forming an ink design on a textile surface comprising the steps of: providing a paper substrate; providing a transfer ink consisting essentially by weight of 5 to 10% of an organic dye selected from the group consisting of aniline and azo dye; 50 to 85% of a primary solvent selected from the group consisting of ethylene glycol monoethyl ether and alcohols; 5 to 34% of a secondary solvent having a boiling point substantially higher than that of said primary solvent selected from the group consisting of higher boiling point ketones, alcohols, glycols and aromatic solvents; 1 to 5% of a binder selected from the group consisting of alcohol soluble rosins, esters, ethyl cellulose, natural gums and shellac; using a felt nib dispenser, applying said ink to a surface of said substrate; allowing said ink to dry; placing said surface of said substrate in juxtaposition to said first mentioned textile surface, and applying heat to transfer at least a portion of said ink to said first mentioned surface.

4,062,645
ACID DYES USEFUL FOR DYEING STREAKED NYLON
Roberto Cipolli, Novara; Giampiero Pieri, Saronno (Varese), and Camillo Paffoni, Pogno (Novara), all of Italy, assignors to Montedison S.p.A., Milan, Italy
Filed Apr. 21, 1976, Ser. No. 678,911
Int. Cl.^{2} C09B *29/38;* **D06P** *1/06, 3/24*
U.S. Cl. 8—41 B **1 Claim**

1. A process for imparting an equalized yellow shade to streaked polyamide fibers comprising dyeing said fibers with a dyestuff having the formula:

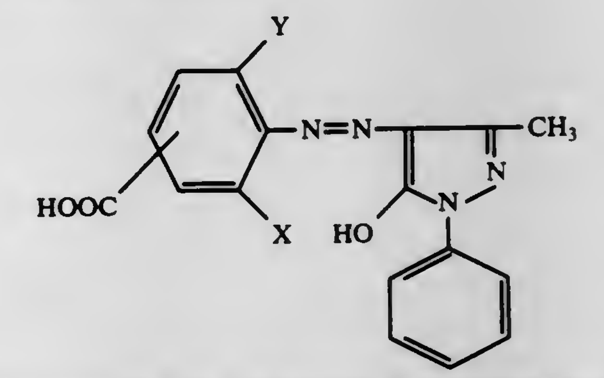

wherein X is hydrogen or bromine, Y is hydrogen, chlorine, bromine or methyl and the —COOH group is meta or para with respect to the azo group in an aqueous bath having a pH value between 8.5 and 9, heating the bath to boiling and then decreasing the pH value to between 5 and 6.5 by adding acetic acid.

4,062,646
PROCESS FOR STERILIZING LOOSE MATERIAL
Wilhelm Lödige, Elsenerstrasse 9c; Fritz Lödige, Leuschnerstrasse 12, and Josef Lücke, Im Lohfeld 15, all of D-479 Paderborn, Germany
Division of Ser. No. 571,699, April 25, 1975, Pat. No. 3,994,685. This application Oct. 19, 1976, Ser. No. 733,699
Claims priority, application Germany, May 11, 1974, 2422907
Int. Cl.^{2} A21D *6/00;* **A23L** *3/16, 3/34;* **A61L** *1/00*
U.S. Cl. 21—56 **6 Claims**

1. A process for the sterilization of loose material by means of a sterilizing agent and heat comprising the steps of continuously agitating the material, positively mixing said sterilizing agent with the continuously agitated material, heating said material to a sterilization temperature, and after said material

has been heated to the sterilization temperature, allowing said material to remain virtually stationary for a predetermined

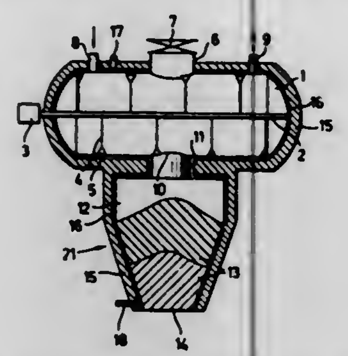

length of time sufficient to sterilize said material at the sterilization temperature in a post-sterilization zone.

4,062,647
CLAY-CONTAINING FABRIC SOFTENING DETERGENT COMPOSITIONS

Thomas D. Storm, Waterloo, Belgium, and Joseph P. Nirschl, Fairfield, Ohio, assignors to The Procter & Gamble Company, Cincinnati, Ohio
Continuation-in-part of Ser. No. 271,943, July 14, 1972, abandoned. This application July 8, 1974, Ser. No. 486,274
Int. Cl.[2] C09K *3/16;* **C11D** *3/12, 3/14;* **D06M** *11/06*
U.S. Cl. 8—137 **10 Claims**

1. A granular, built laundry detergent composition consisting essentially of:
a. from about 5% to about 20% by weight of a water soluble non-soap synthetic detergent compound selected from the group consisting of anionic synthetic detergents, nonionic synthetic detergents, ampholytic synthetic detergents, zwitterionics synthetic detergents, and mixtures thereof;
b. from about 10% to about 60% by weight of an organic or inorganic detergent builder salt; and
c. from about 1% to about 50% by weight of a smectite clay selected from the group consisting of sodium and calcium montmorillonites, sodium saponites, sodium hectorites, lithium and magnesium hectorites, lithium and magnesium saponites, and mixtures thereof, having a cation exchange capacity of at least about 60 meq/100g.,

said composition providing a solution pH of from about 7 to about 12 when dissolved in water at a concentration of about 0.12% by weight.

10. A process for the simultaneous laundering and feel improvement of fabrics comprising contacting said fabrics with an aqueous medium containing from about 0.02% by weight to about 2% by weight of a composition in accordance with claim 1.

4,062,648
PLOTTER WITH ADAPTIVE VELOCITY MEANS FOR IMPROVING PLOTTED LINE QUALITY

Larry Wayne Hennessee, San Diego, Calif., assignor to Hewlett-Packard Company, Palo Alto, Calif.
Filed Jan. 4, 1977, Ser. No. 756,675
Int. Cl.[2] G06F *15/46;* **G05B** *19/18*
U.S. Cl. 364—105 **10 Claims**

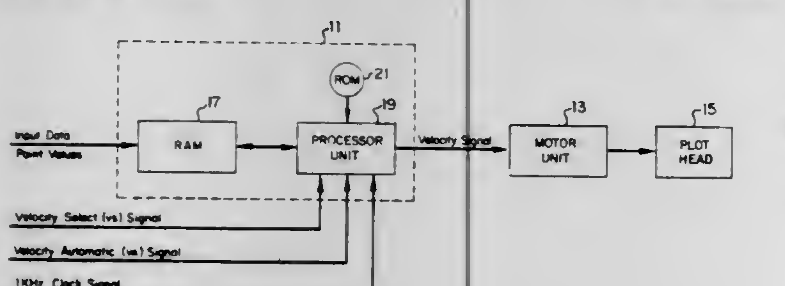

1. Apparatus for producing substantially smooth and continuous motion of a member across a surface in response to successive data values applied at a selected data rate, said apparatus comprising:
a member mounted for movement relative to the surface;
motor means coupled to the member and responsive to an applied velocity signal for moving the member at a selected velocity; and
adaptive velocity means for causing the member to move at the selected velocity, substantially reducing the length of time that the member remains stationary waiting for input data, said adaptive velocity means including:
means for storing successive data values applied at an input rate,
means coupled to the storage means for applying to the motor means the velocity signal representing the selected velocity at which the member is to be moved, said selected velocity being variable with changes in at least one of the input data rate and the difference between successive data values.

4,062,649
DEPLETION INDICATOR FOR CONTROLLED-RELEASE PESTICIDE FORMULATIONS

Jerome G. Kuderna, and Paul M. Saliman, both of Modesto, Calif., assignors to Shell Oil Company, Houston, Tex.
Filed Apr. 29, 1974, Ser. No. 464,869
Int. Cl.[2] G01N *31/22*
U.S. Cl. 23—230 R **4 Claims**

1. A method for visually determining the end of the effective life of a controlled-release formulation of a volatile phosphate ester pesticide of the formula ,02/0070

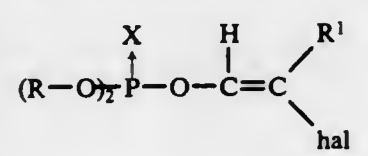

wherein each R is alkyl of from 1 to 4 carbon atoms, R[1] is hydrogen, chlorine or bromine, hal is chlorine or bromine and X is oxygen or sulfur, which method comprises positioning a mixture of an inorganic base, a color-change indicator for acid/base reactions, an inert, absorbent carrier and a humectant, in a position relative to the formulation where it contacts essentially at all times a representative proportion of the pesticide vapors emitted from the formulation, the amount of base being predetermined, and directly related to, the effective life of the formulation, and ascertaining visually when the color of the indicator changes to the color of its neutral or basic form.

4,062,650
THERMOLUMINESCENT AEROSOL ANALYSIS

Robert S. Rogowski, and Edward R. Long, Jr., both of Hampton, Va., assignors to The United States of America as represented by the United States National Aeronautics and Space Administration, Washington, D.C.
Filed Dec. 29, 1976, Ser. No. 755,310
Int. Cl.[2] G01N *25/00, 27/62*
U.S. Cl. 23—232 E **7 Claims**

1. A method for detecting and identifying trace amounts of aerosols in an atmospheric environment comprising:
collecting a sample of the aerosol to be tested;
exposing the collected sample to a controlled gaseous environment having a known quantity of ozone therein, for a fixed period of time, to thereby facilitate an aerosol/ozone reaction;
adding a fluorescer indicator to the reacted sample;
heating the combined sample at a linear programmed rate of 30° C/min to a temperature of 200° C.;

detecting the thermoluminescence of the fluorescer during the heating cycle, and

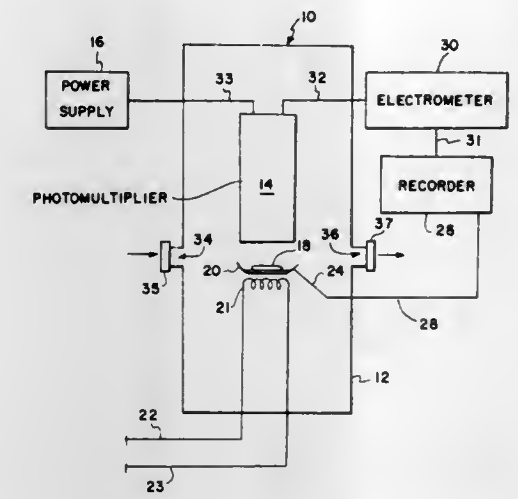

recording a trace of the thermoluminescent output during the heating cycle with the peak output thereof being indicative of the specific aerosol.

4,062,651
IGNITION MEANS IN A CHEMICAL ANALYZER FLAME PHOTOMETER

Larry J. Lape, Sugarland, Tex., assignor to Hycel, Inc., Houston, Tex.
Filed Sept. 21, 1976, Ser. No. 725,236
Int. Cl.[2] G01N *33/16, 21/58*
U.S. Cl. 23—253 PC **6 Claims**

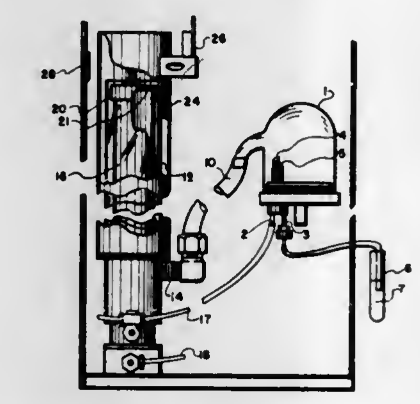

1. In a flame photometer in a chemical analyzer comprising a nozzle, gas source, and atomized sample source for interaction with a flame and means for measuring wavelengths of samples in the flame, the improvement comprising: an electrically conductive screen mounted to said nozzle for forming a flame, means connecting said screen to a source of reference potential, an aperture formed in said screen, an electrode assembly comprising an electrode housed in insulating means, and means mounting said electrode assembly for projection through said aperture, whereby a spark gap is defined between said screen and said electrode.

4,062,652
REAGENT UNIT INTENDED FOR MICROANALYSES OF STANDARD TYPE AND DEVICE AND METHOD FOR ITS PRODUCTION

Gudrun Birgitta Margareta Rolfo-Fontana, 20, Boulevard des Moulins, Monte Carlo, Monaco
Filed June 27, 1974, Ser. No. 483,652
Claims priority, application Sweden, Feb. 7, 1974, 7401658
Int. Cl.[2] B01L *11/00;* **B65D** *23/04;* **B65H** *1/08;* **G01N** *33/00*
U.S. Cl. 23—253 R **6 Claims**

1. A prefabricated micro-quantity reagent dosage unit for use in the course of an analytical procedure involving reaction of a chemical reagent with a reaction mixture to be analyzed, said unit comprising a chemical reagent of predetermined volume, a tube open at both its ends for carrying therewithin said chemical reagent of predetermined volume, sealing means cooperating with said tube for sealingly containing said reagent therein during storage, and a magnetizable material embedded in the wall of said tube to facilitate handling of said tube and for effecting movement of the tube, and thus the

reagent carried thereby, when subjected to said reaction mixture, said tube, said reagent, said sealing means and said magnetizable material comprising a composite structure adapted for storage, transfer and use in a single analytical procedure under action of magnetic forces adapted to be applied to said magnetizable material.

4,062,653
POWDER FLOW CONTROL DEVICE FOR GROWING VERNEUIL CRYSTALS

Richard Falckenberg, Unterhaching, Germany, and Ali Abd el Wahid, Cairo, Egypt, assignors to Siemens Aktiengesellschaft, Berlin & Munich, Germany
Filed Sept. 22, 1976, Ser. No. 725,672
Claims priority, application Germany, Sept. 25, 1975, 2542886
Int. Cl.[2] B01J *17/24*
U.S. Cl. 23—273 V **10 Claims**

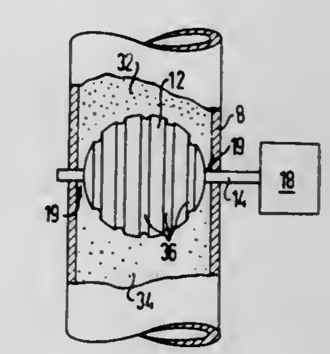

1. A device for growing Verneuil crystals comprising:
a powder supply container having a lower outlet;
a horizontal screen arranged vertically below said outlet;
oscillator drive means connected to said screen for driving said screen in vertical oscillations;
a hollow tube connecting said container outlet and said screen for passage of powder therebetween; and
a conveyor sphere mounted in said tube between said container outlet and said screen on a horizontal shaft through said tube, said sphere being rotated by a motor drive, and the sphere forming an annular ring gap between a surface thereof and an interior surface of the tube.

4,062,654
APPARATUS FOR CONTINUOUS LIQUID-PHASE OXIDATION REACTION
Motoo Shigeyasu, and Takehiko Kitamura, both of Matsuyama, Japan, assignors to Matsuyama Petrochemicals, Inc., Osaka, Japan
Filed Sept. 16, 1974, Ser. No. 506,630
Claims priority, application Japan, Sept. 14, 1973, 48-104412
Int. Cl.² B01J *8/10*
U.S. Cl. 23—288 A **11 Claims**

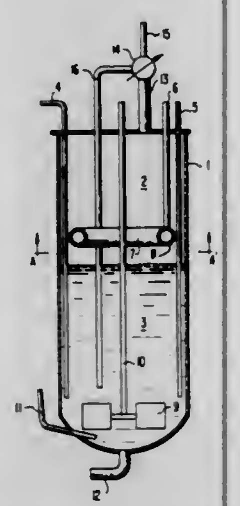

1. In a reaction vessel for continuous liquid-phase oxidation for producing an aromatic carboxylic acid sparingly soluble in a lower aliphatic carboxylic acid solvent by a liquid-phase oxidation of the corresponding alkyl aromatic compound with a molecular oxygen-containing gas under high temperature and high pressure in the presence of the lower aliphatic carboxylic acid solvent and an oxidation catalyst, said reaction vessel having a lower portion for holding a liquid phase and an upper portion for holding a vapor phase, said reaction vessel including a vapor outlet at the top of the reaction vessel, an outlet for the reaction product and an inlet for an oxygen-contining gas adjacent the bottom of said reaction vessel, stirring means disposed in the reaction vessel, a conduit for supplying a liquid mixture of raw material and solvent having the discharge end thereof in the lower portion of the vessel, a conduit for supplying a solvent-catalyst liquid mixture to the lower portion of the vessel adjacent the bottom of the reaction vessel, a condenser connected to said vapor outlet and a conduit disposed in communication with said condenser at one end with the discharge end disposed in the lower portion of said vessel for recycling condensed liquid, the improvement comprising a spraying means disposed in the upper portion of the vessel for supplying additional solvent-catalyst liquid mixture, having downwardly and outwardly slanted discharge holes and located at a position of about 1/20 to about ⅓ times the height of the reaction vessel above the line between the upper and lower portions of the vessel to thereby supply continuously said solvent-catalyst liquid mixture in a finely divided form onto the inside wall of the reaction vessel immediately above said line to remove reaction products deposited on said wall.

4,062,655
ARTIFICIAL FIRE PLACE LOGS WHICH BURN WITH COLORED FLAME AND PROCESS FOR MAKING SAME
William Hughes Brockbank, Salt Lake City, Utah, assignor to Business Controls, Inc., Salt Lake City, Utah
Division of Ser. No. 835,092, June 20, 1969, Pat. No. 3,637,355. This application July 27, 1971, Ser. No. 166,551
The portion of the term of this patent subsequent to Jan. 25, 1989, has been disclaimed.
Int. Cl.² C10L *9/00, 10/00*
U.S. Cl. 44—6 **9 Claims**

1. An artificial log having pyrogenic flame coloring matter, comprising a shaped, hardened mixture of combustible materials having an effective amount of pyrogenic flame coloring matter distributed within the mixture, and having an additional effective amount of pyrogenic flame coloring matter superficially adherent to the surface thereof.

6. A process for producing artificial logs exhibiting colored flames when burned, comprising the steps of:

admixing particles of combustible material, a binder, and pyrogenic flame coloring matter to form an artificial log mix;

molding an artificial log with said artificial log mix; and

adhering additional pyrogenic flame coloring matter superficially to the surface of said artificial log.

4,062,656
FLUIDIZED BED APPARATUS
Don E. Blaser, Dover, and Arthur C. Worley, Morristown, both of N.J., assignors to Exxon Research and Engineering Company, Linden, N.J.
Filed May 12, 1976, Ser. No. 685,458
Int. Cl.² C10J *3/48*
U.S. Cl. 48—73 **18 Claims**

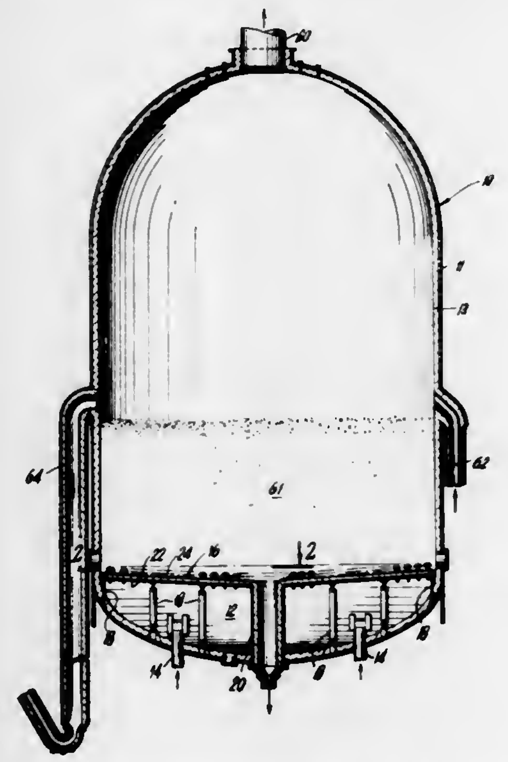

1. In a fluidized bed apparatus, such as a petroleum coke gasifier, an outer vessel having at a lower region thereof a plenum chamber and carrying at said lower region above said plenum chamber a grid which extends across said vessel, and said grid carrying a plurality of nozzle means distributed over said grid and communicating through said grid with said plenum chamber for receiving gas therefrom and distributing the gas into the space in said vessel over said grid for maintaining particles in a fluidized condition above said grid, each of said plurality of nozzle means providing a drop in the pressure of gas received from said plenum chamber as the gas flows out of said nozzle means into the space in the vessel above said grid, first orifice means situated adjacent said grid in the path of gas flow to each of said nozzle means to provide a preliminary drop in the pressure of the gas flowing from said plenum chamber to each nozzle means, and second orifice means at the outlet of said nozzle means to provide a secondary drop in the pressure of the gas flowing from said plenum chamber into the space above the grid, so that the total pressure drop between said plenum chamber and the space over said grid occurs in two distinct stages within said nozzle means.

4,062,657
METHOD AND APPARATUS FOR DESULPHURIZING IN THE GASIFICATION OF COAL
Helmut Knüppel; Karl Brotzmann, and Hans-Georg Fassbinder, all of Sulzbach-Rosenberg, Germany, assignors to Eisenwerk-Gesellschaft Maximilianshutte mbH, Sulzbach-Rosenberg, Germany
Filed May 7, 1976, Ser. No. 684,330
Claims priority, application Germany, May 9, 1975, 2520584
Int. Cl.² C10J *3/20*
U.S. Cl. 48—77 **8 Claims**

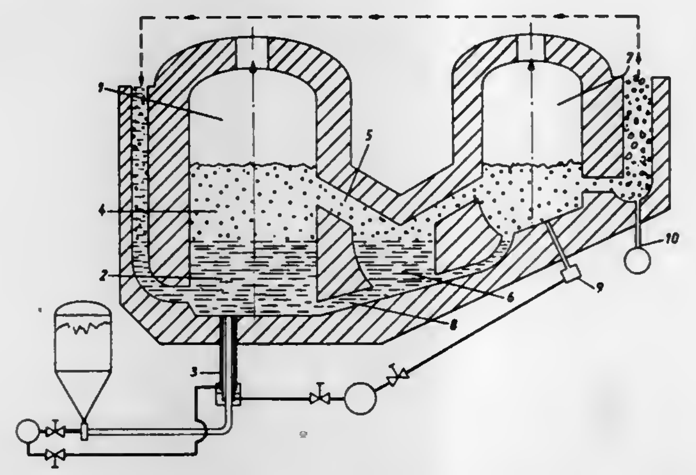

1. In a method of gasifying coal in a molten iron bath covered with a liquid, sulphur absorbing slag, wherein sulphur bearing coal is charged with the molten iron bath in a coal gasification vessel and gasified therein, by reaction with an oxygen-containing/gas introduced into said molten iron bath and the sulphur in the coal passes into the sulphur absorbing slag overlying the molten iron bath, the improvements which include:

continuously transferring some of said liquid slag from said gasification vessel to a desulphurization vessel connected thereto via a passage operatively associated with a settling chamber for the collection of any iron droplets entrained in said liquid slag;

separating said iron droplets from said liquid slag in said settling chamber;

desulphurizing said transferred liquid slag by introducing an oxygen containing gas below the surface of said liquid slag after it has been transferred into said desulphurization vessel and while it remains liquid, to diminish the sulphur content of said slag; and

then returning almost all of the resulting desulphurized liquid slag to said coal gasification vessel while said slag is still liquid and while it retains a substantial portion of the sensible heat it contained when it was transferred from said coal gasification vessel to said desulphurization vessel, thereby conserving the heat contained in said slag.

7. An apparatus for gasifying sulphur bearing coal including a coal gasification vessel containing a molten iron bath and provided with tuyere means for introducing fluids into said bath in said coal gasification vessel and a desulphurization vessel containing a molten bath of sulphur rich slag and provided with means to inject oxygen containing gas into said slag; and

passage means in the walls of said vessels for placing said coal gasification vessel and its contents in communication with said desulphurization vessel and its contents, said passage means including a first passage in the wall of said gasification vessel blow the top of said slag for withdrawing liquid slag from said gasification vessel and a second passage in the wall of said gasification vessel for returning said liquid slag to said gasification vessel after it has been treated in said desulphurization vessel;

means defining a settling chamber in the first said passage for separating out iron droplets from the sulphur-rich slag as it is transferred from said gasification vessel to said desulphurization vessel and return passage means communicating with said settling chamber and said coal gasification vessel for returning the separated iron to the gasification vessel; and

means defining an outlet in said desulphurization vessel for withdrawing of a portion of the liquid slag after it has been desulphurized in said desulphurization vessel.

4,062,658
COMPOSITION AND METHOD FOR REPAIRING SELENIUM PHOTORECEPTORS
John Frank Byrne, Worthington, Ohio, assignor to Xerox Corporation, Stamford, Conn.
Filed Sept. 3, 1975, Ser. No. 610,036
Int. Cl.² B24B *37/04*
U.S. Cl. 51—281 R **8 Claims**

5. A method for repairing a damaged area on a selenium photoreceptor comprising:

a. providing a polish composition consisting essentially of (i) a primary suspending agent, being one of zinc oxide or magnesium hydroxide or a mixture of both; and (ii) small particles of amorphous silica, both materials being suspended in a liquid medium selected from an alcohol, an aliphatic hydrocarbon and mixture thereof;

b. applying the polish composition to a physically damaged area of a selenium photoreceptor; and

c. rubbing the polish composition about the damaged area so as to effect a smoothing of the physically damaged area of the photoconductor.

4,062,659
CONTOURING MAGNETIC HEAD SURFACES
Louis B. Feierabend, and Otto R. Luhrs, both of Boulder, Colo., assignors to International Business Machines Corporation, Armonk, N.Y.
Division of Ser. No. 555,650, March 5, 1975, Pat. No. 4,010,574. This application Nov. 30, 1976, Ser. No. 746,042
Int. Cl.² B24B *1/00*
U.S. Cl. 51—281 R **5 Claims**

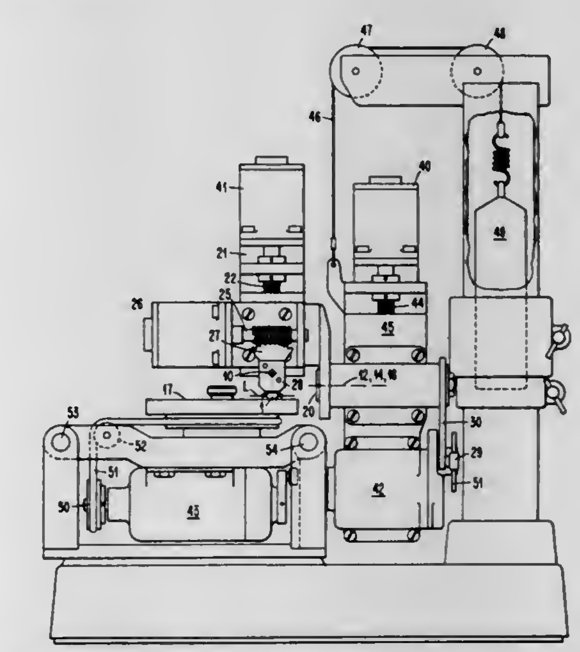

1. A method for contouring a transducer surface by holding it in contact at one point with a surface removal device, including the steps of:

first, moving the contact point in first and second opposite directions on the surface;

second, rocking the contact point, around points on an axis, in third and fourth opposite directions on the surface intersecting the first and second directions; and

third, causing the contact point to advance in the first direction while following a plurality of parallel lines on the surface lying in the third and fourth directions.

4,062,660
METHOD OF PRODUCING NICKEL COATED DIAMOND PARTICLES

Michael G. Nicholas, 6, Bryan Way, Wantage, Berkshire; Peter M. Scott, "Skagway", Peasemore, Newbury, Berkshire, both of England, and Bruce I. Dewar, 43 Walmer Street, Johannesburg, 2001, South Africa

Continuation of Ser. No. 461,213, April 15, 1974, abandoned. This application May 13, 1976, Ser. No. 685,751

Claims priority, application United Kingdom, Apr. 16, 1973, 18268/73

Int. Cl.² B24D *3/06*

U.S. Cl. 51—295 **1 Claim**

1. A method of producing nickel coated diamond particles including the steps of providing a batch of individual, discrete uncoated particles, depositing a nickel coating on the individual particles and then heat treating the coated particles to a temperature of about 800° C for about 2 hours to produce a batch of individual, discrete nickel coated diamond particles, the deposition and heating steps being carried out in a non-oxidising atmosphere.

4,062,661
DIFFUSER FOR FINELY DIVIDING A LIQUID, PARTICULARLY WATER TO BE DEGASSED

Willem Wiemer, Delden, and Mart van den Boomen, Hengelo, both of Netherlands, assignors to Koninklijke Machinefabriek Stork B.V., Hengelo, Netherlands

Filed May 20, 1976, Ser. No. 688,318

Claims priority, application Netherlands, June 6, 1975, 7506770

Int. Cl.² B01D *19/00*

U.S. Cl. 55—190 **16 Claims**

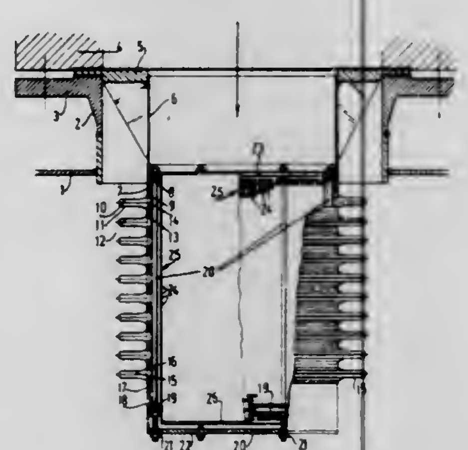

1. In a diffuser for finely dividing a liquid, particularly water to be degassed, the combination of:

an assembly defining a chamber and having an inlet for receiving liquid under pressure, said assembly including at least two plates having mutually opposed peripheral portions, means for fixing said plates relative to each other, and at least one of said plates being resilient so that pressure of fluid therebetween is effective to deform said one plate and effect a pressure-regulated separation between said peripheral portions; said means comprising clamping means for resiliently clamping the peripheral portion of said one plate against the peripheral portion of the other plate.

4,062,662
DEGASSING COLUMN

Bernhard Kuxdorf; Karl Kaiser, both of Bruhl, and Kurt Wissel, Wesseling-Urfeld, all of Germany, assignors to Hoechst Aktiengesellschaft, Frankfurt am Main, Germany

Filed Nov. 8, 1976, Ser. No. 739,580

Claims priority, application Germany, Nov. 7, 1975, 2550023; Sept. 9, 1976, 2640592

Int. Cl.² B01D *19/00*

U.S. Cl. 55—206 **15 Claims**

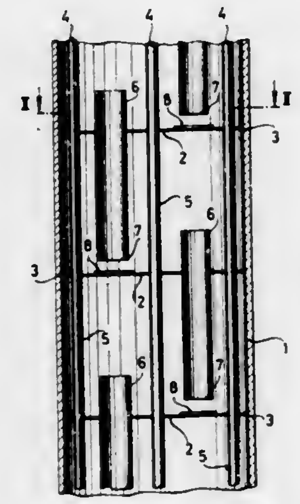

1. A degassing column for removing monomers from polymers present in dispersions comprising a vertically elongated tubular shell provided with a plurality of substantially horizontally disposed apertured plates; said plates being vertically spaced within and attached to the inner surface of said shell; each of said plates being penetrated by at least one eccentrically arranged conduit comprising a draining shaft in the upper portion thereof and a feed shaft in the lower portion below the penetrated plate; degassing column wherein the apertures in said plates have a diameter of less than 5 mm; each plate is supported by a plurality of wedge mountings and is wedged therewith, said wedge mountings being fastened around the inner surface of said shell; a small gap uniform in width over the periphery is left between each plate and said shell; the distance between the upper end of each conduit and the plate penetrated by it is 80 to 400 mm; the distance between the lower end of each conduit and the next plate arranged below it is 10 to 100 mm; and a surface portion of each apertured plate underneath each conduit is impermeable; said impermeable surface portion being one to two times the cross-sectional area of the conduit.

4,062,663
CONTACT APPARATUS FOR MULTIPHASE PROCESSING

Jerome S. Spevack, New Rochelle, N.Y., assignor to Deuterium Corporation, White Plains, N.Y.

Filed Feb. 4, 1976, Ser. No. 655,239

Int. Cl.² B01D *47/00*

U.S. Cl. 55—238 **24 Claims**

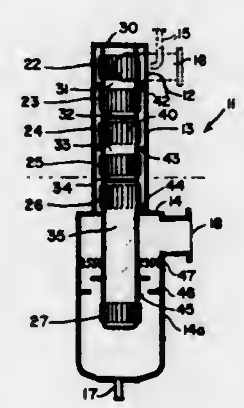

1. An apparatus for processing essentially independently related quantities of a plurality of phases, at least one of which is a liquid phase, in cocurrent flows, said apparatus comprising means defining a cocurrent flow path for said phases extending therein in an axial direction not counter to the force of gravity, said means comprising in combination:

a. an elongated housing having communicating input, process and output sections connected for passing flows of each of said phases from the input section into the input end of the process section and from the output end of the process section into the output section, having separate inlet means connected to said input section for feeding each of said flows thereinto, and having outlet means connected to said output section for discharging the processed phases therefrom, said process section being (i) in the form of an elongated body having an axis and being (ii) axially positioned with its output end at an elevation no higher than its input end and providing the said flow path which in its axial direction is not counter to the force of gravity, and said output section comprising a circular cross section chamber and means for causing circumferential movement of the flows therein,

b. multiphase contact means in said housing having at least one pair of first and second mixing elements and an additional first mixing element, each of said elements having a cylindrical chamber which is closed at one end and open at the other end, each pair of said elements being joined together at their open ends, the walls of each of said chambers having wall openings therein for the passage of said flows cocurrently therethrough, said wall openings being provided with flow guide means extending from said walls for directing the said flows in the same circumferential direction into the chamber of each first mixing element and out of the chamber of the second mixing element, said mixing elements being in axial alignment, with the closed end of a second mixing element of a pair of elements positioned opposite to the closed end of the next following first mixing element, and disposed coaxially in said process section except for the first mixing element of the first pair of said at least one pair which is disposed in said input section and is closed from said housing section except through its said wall openings having flow guide means, and for the open end of said additional first mixing element which is disposed in said output section and delivers said flows to the said means therein for causing circumferential movement of the flows, and

c. partitions extending between said housing and each pair of mixing elements intermediate the first and second elements thereof and also between said housing and said additional first mixing element intermediate the wall openings and open end thereof and forming a conduit for passing at least a principal part of the said flows from the inlet of said input section to said process section and therethrough generally not counter to the force of gravity and therefrom to the outlet of said output section through the first and second mixing elements of each pair of mixing elements and through said additional first mixing element in sequence.

4,062,664
PARTICLE SEPARATOR APPARATUS

George T. Dupre, Palatine; Thomas M. DeMarco, Chicago; Lawrence E. Borkowski, Elk Grove Village, and Harvey Waliczek, Palatine, all of Ill., assignors to NFE International, Ltd., Arlington Heights, Ill.

Filed Mar. 15, 1976, Ser. No. 667,120

Int. Cl.² B01D *50/00*

U.S. Cl. 55—319 **4 Claims**

3. In portable vacuum collector apparatus for separating particulate material from an airstream, including a movable frame, an elongated, enclosed, four-sided separation chamber mounted on said frame, said separation chamber having a rectangular cross section and including an orifice at the top end thereof for receiving the particulate material laden airstream, means for downwardly directing said airstream through said orifice into said separation chamber and enabling an exiting airstream to exit said chamber through said orifice leaving a substantial portion of the particulate material to accumulate for collection at the bottom of said chamber, and blower means mounted to said frame and interconnected to said elongated separation chamber for directing said airstream and particulate material thereto, the improvement comprising:

a pair of air filter chambers mounted to said movable frame adjacent respective opposite sides of said separation chamber,

each of said respective opposite separator chamber sides also forming a common wall of a respective air filter chamber;

a centrifugal separator mounted to said movable frame intermediate said air filter chambers and immediately adjacent said separation chamber, said centrifugal separator having an input receiving said airstream and an output communicating said airstream to said orifice;

an inlet at the top of each air filter chamber for receiving a portion of said exiting airstream from said separation chamber and an outlet at the top of each filter chamber coupled to said blower means;

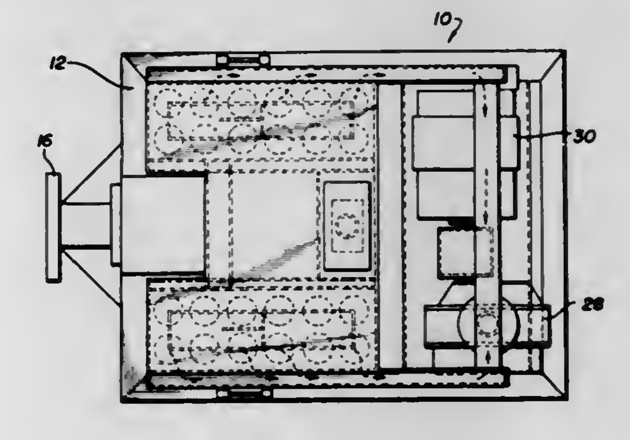

a plurality of air permeable fibrous filter elements having a peripheral wall for separating particulate material;

means for mounting said air permeable fibrous filter elements within each of said air filter chambers with respective top and bottom ends adjacent the top and bottom of said air filter chambers;

a wall member in each air filter chamber having one end mounted adjacent to the bottom of said filter elements and an opposite end mounted to the top of said respective air filter chambers and extending intermediate said common wall and said fibrous filter elements to restrict an airstream to pass upwardly through said filter elements to said respective outlet;

said wall member and a respective common wall defining a respective vertical channel therebetween in each of said air filter chambers extending between said inlet at the air filter chamber top and said filter element bottom ends to direct said respective portion of said exiting airstream received at said respective air filter chamber inlet to said respective filter element bottom ends.

4,062,665
CONTINUOUS OPTICAL FIBER PREFORM FABRICATION METHOD

Tatsuo Izawa; Tadashi Miyashita, both of Mito, and Fumiaki Hanawa, Kitaibaraki, all of Japan, assignors to Nippon Telegraph and Telephone Public Corporation, Tokyo, Japan

Filed Apr. 5, 1977, Ser. No. 784,869

Claims priority, application Japan, Apr. 6, 1976, 51-38883

Int. Cl.² C03B *37/00*

U.S. Cl. 65—3 A **14 Claims**

1. A continuous optical fiber preform fabrication method, comprising the steps of:

preparing a refractory starting member;

moving said starting member along its axis of rotation while rotating it by rotating and moving means;

blowing a glass raw material for the formation of the core from a nozzle for the core into a high temperature portion near the tip of a high temperature burner for the reaction of said glass raw material to deposit glass fine particles consisting principally of silicon dioxide, resulting from the reaction, on one end face of said starting member to form thereon a columnar porous glass core about said axis of rotation of the starting member;

blowing a glass raw material for the formation of the cladding from at least one nozzle for the cladding into a high

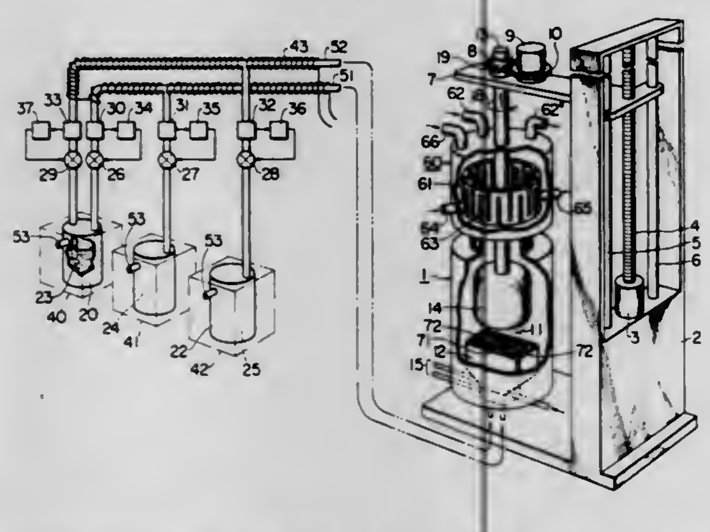

temperature portion near the tip of a high temperature burner for the reaction of said glass raw material to deposit glass fine particles consisting principally of silicon dioxide, resulting from the reaction, on the peripheral surface of said porous glass core to form thereon a porous glass layer for the cladding to provide a porous preform, said porous glass layer having a refractive index lower than said porous glass core; and

continuously feeding said porous preform into a high temperature furnace provided on said axis of rotation of the starting member for vitrifying said porous preform into an optical fiber preform.

4,062,666

COMPOSITE THRESHOLD ASSEMBLY FOR A MOLTEN GLASS DELIVERY APPARATUS AND METHOD OF DELIVERY

Robert L. Tilton, Wexford, Pa., assignor to PPG Industries, Inc., Pittsburgh, Pa.

Filed June 2, 1976, Ser. No. 692,155

Int. Cl.² C03B *18/02*

U.S. Cl. 65—99 A **10 Claims**

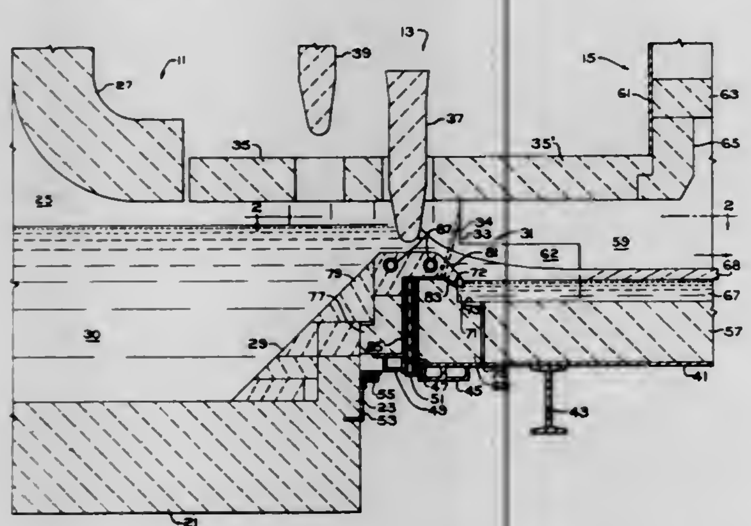

1. In a molten glass delivery apparatus connecting a glassmaking furnace to a glass forming chamber which contains a pool of molten metal for supporting glass during forming comprising a glass-supporting threshold extending across the width of an inlet end of the forming chamber, side members, a roof and a metering member extending downwardly between the side members to provide a controllably sized opening defined by the metering member, the side members and the threshold through which molten glass may be delivered from the glassmaking furnace onto the molten metal in the forming chamber, wherein the threshold comprises a plurality of refractory pieces and has an upwardly-facing, convex upper surface for supporting molten glass during delivery that includes a front face extending beneath the surface of the pool of molten metal in the forming chamber whereby molten glass is provided support until it is supported by the molten metal, the improvement which comprises

a threshold for delivering molten glass from the furnace to the forming chamber including an upper refractory portion of substantially impervious fused refractory having a glass-supporting surface that extends in a slope downwardly from the top of the threshold into contact with the molten metal in the forming chamber and

a lower refractory portion positioned below and supporting said upper portion, said upper and lower portions having spaced opposing surfaces forming a gas collecting recess which terminates in a transverse opening extending along the front face of the threshold beneath the surface of the pool of molten metal for collecting gases present therein,

means for venting gases from said transverse opening, and

means for preventing the flow of molten metal about the ends of the threshold into said transverse opening.

9. In a method of making flat glass wherein a stream of molten glass is delivered over a refractory, glass-supporting threshold extending across the width of an inlet end of a forming chamber from a glassmaking furnace onto the surface of a pool of molten metal in the forming chamber while maintaining support of the glass and thereafter forming a continuous dimensionally stable sheet of glass by cooling and advancing the delivery glass, the improvement which comprises

directing gas present in the molten metal in the vicinity of molten glass delivery along a gas collecting opening extending beneath the refractory supported molten glass from a region below the surface of the pool of molten metal to a region above the surface of the pool of molten metal,

venting the gas from the region of the opening beneath the refractory supported molten glass which is above the surface of the pool of molten metal, whereby the incidence of scattered deformations in the bottom surface of the glass being made is substantially diminished, and

preventing the flow of molten metal about ends of the threshold into the gas collecting opening.

4,062,667

METHOD OF MELTING RAW MATERIALS FOR GLASS

Kyohei Hatanaka; Hajime Inoue, both of Matsusaka; Haruya Hisatomi, Kamifukuoka; Koya Okuda, Chiba; Takeshi Suzuki, Himeji; Mikio Murao, and Susumu Utiyama, both of Kobe, all of Japan, assignors to Central Glass Co., Ltd., Ube and Kawasaki Jukogyo Kabushiki Kaisha, Kobe, both of, Japan

Filed Sept. 22, 1976, Ser. No. 725,554

Claims priority, application Japan, Sept. 27, 1975, 50-116655; Sept. 27, 1975, 50-116659; Sept. 27, 1975, 50-116660; Sept. 27, 1975, 50-116662

Int. Cl.² C03B *5/16*

U.S. Cl. 65—135 **24 Claims**

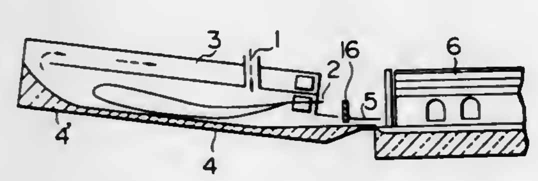

1. A method of continuously melting particulate ingredients for making glass, in a melting furnace having an elongated

substantially horizontally disposed melting chamber, said chamber having a sloped bottom wall, said melting furnace having burner means located at one horizontal end of said melting chamber and arranged for directing jet-like flame means toward the opposite horizontal end of said melting chamber above said bottom wall, said melting chamber having outlet means for molten ingredients at said one horizontal end of said melting chamber and below said burner means, which comprises the steps of

continuously feeding a stream of said ingredients into substantially horizontally directed jet-like flame means issuing from said burner means, said ingredients having a particle size selected so that the particles are suspended in said flame means and remain in contact therewith for a prolonged time for being heated thereby and said ingredients simultaneously are projected by said flame means substantially horizontally through said melting chamber and above said bottom wall thereof toward said opposite horizontal end of said melting chamber until said ingredients drop downwardly, by the effects of gravity, onto said bottom wall at a zone horizontally spaced from said one horizontal end of said melting furnace, the ingredients resting on said bottom wall being further heated by said flame means and said gaseous products of combustion flowing thereabove whereby to melt said ingredients to form a melt on said bottom wall;

flowing said melt along said bottom wall in a direction opposite to the direction of flow of said flame means and said gaseous products of combustion and located directly therebelow so that said melt flows to said outlet means at said one horizontal end of said melting chamber;

removing said melt from said melting chamber through said outlet means and feeding said melt into a glass tank furnace.

4,062,668

APPARATUS FOR ARC MOVEMENT OF THE PARISON

Anthony T. Zappia, Carmel, Ind., assignor to Ball Packaging Products, Inc., Muncie, Ind.

Filed Aug. 30, 1976, Ser. No. 718,406

Int. Cl.² C03B *9/00*

U.S. Cl. 65—229 **10 Claims**

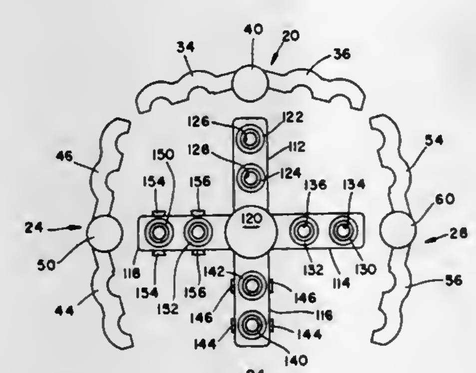

1. Glassware forming apparatus comprising at least first and second neck rings for supporting glassware, at least first and second blow heads, first and second arms for supporting the first and second neck rings, respectively, third and fourth arms for supporting the first and second blow heads, respectively, a turret for rigidly supporting the first, second, third and fourth arms for pivotal movement about a common vertical axis, a parison mold and first and second blow molds, means for opening and closing the molds, means providing a rest position, and means for pivoting the turret about its axis first in one direction and then in the opposite direction to position the first and second neck rings alternately in engagement with the parison mold, to convey all blanks supported from the first neck ring to the first blow mold, to convey all blanks supported from the second neck ring to the second blow mold, to move the first blow head between a position in engagement with blanks conveyed to the first blow mold to blow them into glassware, and the rest position, and to move the second blow head between a position in engagement with blanks conveyed to the second blow mold to blow them into glassware, and the rest position.

7. Glassware forming apparatus comprising first and second neck rings, first and second blow heads, a parison mold, first and second blow molds, means defining a finished glassware location, means for opening and closing the parison mold and the blow molds, a turret, means for supporting the first and second neck rings and first and second blow heads from the turret, and means for movably supporting the turret, the parison mold, the first and second blow molds and the finished glassware location being disposed at approximately 90° intervals about the periphery of a circle with the parison mold substantially diametrically opposite the finished glassware location and the blow molds being substantially diametrically opposite one another, the turret being substantially vertically above the center of the circle, the first and second neck rings being supported from the turret with substantially 90° separation in a plane parallel to the plane of the circle and the first and second blow heads being supported from the turret with substantially 90° separation in a plane parallel to the plane of the circle, and each of the first and second neck rings being disposed substantially diametrically opposite one of the first and second blow heads on the turret.

4,062,669

N-ORGANO-N-PHOSPHONOMETHYLGLYCINE-N-OXIDES AND PLANT GROWTH REGULANT AND PHYTOTOXICANT COMPOSITIONS CONTAINING SAME

John E. Franz, Crestwood, Mo., assignor to Monsanto Company, St. Louis, Mo.

Division of Ser. No. 313,706, Dec. 11, 1972, abandoned. This application Sept. 15, 1975, Ser. No. 613,708

Int. Cl.² A01N *9/36*

U.S. Cl. 71—86 **9 Claims**

1. A herbicidal composition comprising an inert adjuvant and an effective amount of a compound having the formula

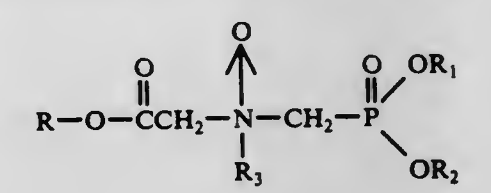

wherein R, R_1 and R_2 are each independently selected from the group consisting of hydrogen, salt forming alkali or alkaline earth metal cations, ammonium and organic ammonium group said organic ammonium group being derived from an organic amine having a molecular weight below about 300 and containing not more than two amine groups; R_3 is selected from the class consisting of $C_nH_{2n}COOR$ wherein n is an integer from 1 to 10 and R is as above defined, and

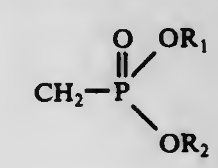

wherein R_1 and R_2 are as above defined.

4,062,670
HERBICIDAL HETEROCYCLIC COMPOUNDS, COMPOSITIONS, AND METHODS
Kurt H. G. Pilgram, Modesto, Calif., assignor to Shell Oil Company, Houston, Tex.
Division of Ser. No. 645,598, Dec. 31, 1975, Pat. No. 4,019,892. This application Nov. 4, 1976, Ser. No. 738,794
Int. Cl.[2] A01N *9/12;* **C07D** *277/04, 263/06*
U.S. Cl. 71—88 12 Claims

1. A compound of the formula

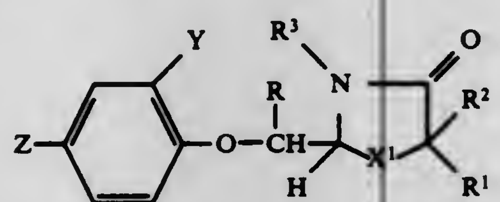

wherein X^1 is oxygen or sulfur; Y is hydrogen, halogen selected from fluorine, chlorine or bromine, cyano, alkyl, alkoxy or alkylthio of 1 to 6 carbon atoms each optionally substituted by one or more halogen atoms, Z is hydrogen, halogen selected from fluorine, chlorine or bromine, alkyl or alkoxy of 1 to 6 carbon atoms optionally substituted by one or more halogen atoms; R^1 and R^2 each independently is hydrogen, alkyl of 1 to 6 carbon atoms or aryl or aralkyl of up to 8 carbon atoms; R^3 is hydrogen or alkyl of 1 to 6 carbon atoms; and R is hydrogen or methyl.

11. A method for combating weeds which comprises applying to the weeds or soil containing seeds of said weeds a herbicidally effective amount of a compound as claimed in claim 1.

12. A herbicidal composition which comprises a compound as claimed in claim 1 and at least one surface active agent or carrier therefor.

4,062,671
IMIDAZOISOINDOLEDIONES, AND THE USE THEREOF AS HERBICIDAL AGENTS
Marinus Los, Pennington, N.J., assignor to American Cyanamid Company, Stamford, Conn.
Division of Ser. No. 631,357, Nov. 12, 1975, Pat. No. 4,017,510. This application Oct. 18, 1976, Ser. No. 733,635
Int. Cl.[2] A01N *9/22*
U.S. Cl. 71—92 11 Claims

1. A method for the control of undesirable plant species comprising applying to the foliage of the undesirable plants or the soil in which they are planted and/or growing, a herbicidally effective amount of a compound having the structure:

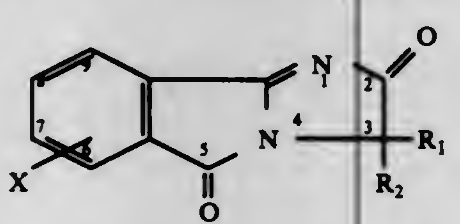

wherein X is H, CH_3, NO_2, Cl, OCH_3 or SCH_3; R_1 is alkyl C_1–C_4; R_2 is alkyl C_1–C_6, cycloalkyl C_3–C_6, alkenyl C_2–C_4, phenyl, halophenyl or benzyl; and when R_1 and R_2 are taken together with the carbon to which they are attached, they may form cycloalkyl C_3–C_6 optionally substituted with methyl; and the optical isomers thereof.

4,062,672
PROCESS FOR IMPROVING THE FRAGMENTATION CAPABILITY OF METALLURGICAL SLAGS AND CINDERS
Maryan Kunicki, Germain-les-Corbeil, and Michel Roussel, Paris, both of France, assignors to Entreprise Gagneraud Pere et Fils, Paris, France
Continuation-in-part of Ser. No. 545,828, Jan. 31, 1975, abandoned. This application Jan. 18, 1977, Ser. No. 760,413
Claims priority, application France, Oct. 21, 1974, 74.35327
Int. Cl.[2] C21B *3/04*
U.S. Cl. 75—30 14 Claims

1. A process for treating metallurgical slags and cinders to modify their physical-chemical characteristics while conserving energy consumption, and to increase their fragmentability and crushability, comprising:

injecting into the slag, by means of compressed air directed substantially perpendicularly to the sheet of molten slag being poured in the molten state from the ladle into the cooling pit, a jet of pulverulent dry material compounds capable of releasing non-polluting gases into the slag by endothermal reaction utilizing a part of the sensible heat of the molten mass of the slag, wherein the temperature of the slag being poured is sufficiently high to permit said endothermal reaction and sufficiently low to permit capture of the gases so produced while the slag is solidifying; and

fragmenting or crushing the solidified slag so produced for further use.

4,062,673
FLASH SMELTING OF IRON WITH PRODUCTION OF HYDROGEN OF HYDROGENATION QUALITY
Edward S. Roberts, Bayside, N.Y., assignor to Robert Ames Norton, Stamford, Conn.
Continuation-in-part of Ser. No. 643,099, Dec. 22, 1975, abandoned. This application July 15, 1976, Ser. No. 705,620
Int. Cl.[2] C21B *11/00*
U.S. Cl. 75—40 8 Claims

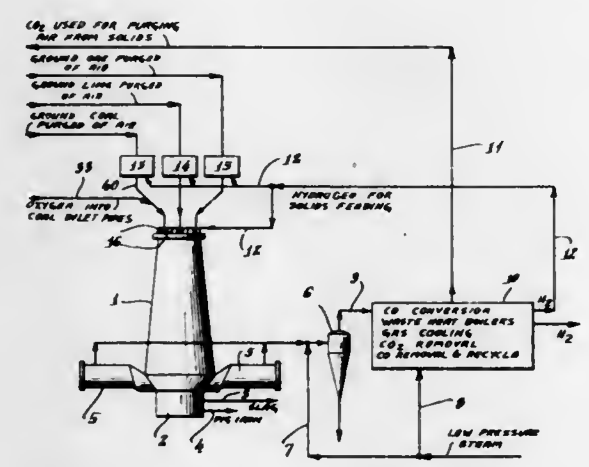

1. A process of smelting of an iron ore feed, selected from the group consisting of iron oxide and partially or wholly pre-reduced iron, to molten iron with concomitant production of product hydrogen of hydrogenation quality or a mixture of hydrogen and carbon monoxide for methanol or methane production, in combination,

a. introducing suspended in a stream of hydrogen particulate iron oxide or pre-reduced iron oxide, a large excess of particulate carbonaceous fuel together with particulate slag-forming components and oxygen of at least commercial purity into a furnace, in such proportions that after completion of all reactions oxygen partial pressure in the furnace is below the pressure which would be in equilibrium with molten FeO as a seperate phase, separating molten iron and molten slag from off gases containing carbon monoxide, small amounts of carbon dioxide, steam, and entrained droplets, quenching the off gases with steam to a temperature at which entrained droplets are solidified and the solids can be separated, and separating said solids in the presence of sufficient steam to prevent disproportionation of carbon monoxide to carbon and carbon dioxide as the gases are further cooled,

b. converting at least some of the carbon monoxide in the off gases after quenching to form carbon dioxide and hydrogen by the water gas shift conversion, removing the carbon dioxide from the hydrogen, the carbonaceous fuel being in sufficient excess to both reduce iron oxide and to furnish the necessary heat for the smelting, the excess of carbonaceous fuel also being sufficient to produce an off gas with less than 15% of either CO_2 or H_2O, and

c. recycling a minor portion of the hydrogen not substantially in excess of that required to suspend the finely divided constituents of fuel, iron oxide or pre-reduced iron oxide, and to form a curtain protecting the walls of the equipment from corrosion by molten FeO.

4,062,674
IRON OR STEELMAKING PROCESS
David A. Hawkes, Guisborough; Andray Uemlianin, Redcar, and Hope Lubanska, Acton, all of England, assignors to British Steel Corporation, London, England
Filed Nov. 11, 1976, Ser. No. 740,860
Claims priority, application United Kingdom, Nov. 21, 1975, 48006/75
Int. Cl.[2] C21C *7/00*
U.S. Cl. 75—61 7 Claims

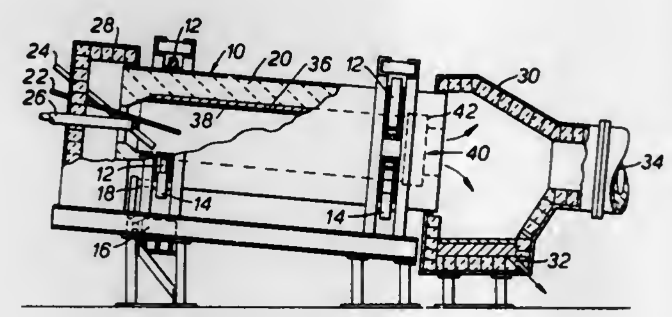

1. In an iron or steelmaking process wherein a refractory lined generally horizontally disposed rotary furnace having an open discharge end and an inlet end for iron or steelmaking materials is rotated about its axis at such a speed that the liquid and solid furnace contents are maintained around the interior by centrifugal force, the said contents comprising liquid metal forming an outer layer in contact with the refractory lining and an inner slag layer spread on the liquid metal; the improvement comprising the steps of reducing the speed of rotation of the furnace during the process to reduce the centrifugal force acting on the furnace contents to promote instability of the slag and liquid metal layers adjacent the discharge end of the furnace and permit at least the liquid metal layer adjacent the discharge end of the furnace to increase in thickness whilst at least partially retaining the slag layer within the furnace, discharging a greater proportion of the liquid metal layer than of the slag layer from the discharge end of the furnace during the period of instability in which the liquid metal has increased in thickness at said discharge end of the furnace and thereafter increasing the speed of rotation of the furnace to retain both the liquid metal and slag layers within the furnace.

4,062,675
ORE TREATMENT INVOLVING A HALO-METALLIZATION PROCESS
Abraham A. Dor, Lakewood, Ohio, assignor to The Hanna Mining Company, Cleveland, Ohio
Filed Mar. 25, 1971, Ser. No. 128,072
Int. Cl.[2] C22B *23/02*
U.S. Cl. 75—82 26 Claims

1. In a roasting process for the treatment of nickel or cobalt-containing ores wherein such ore is heated together with a solid reducing agent and a halide to cause the cobalt or nickel content of such ore to transfer from the gangue and deposit as metal on such solid reducing agent; the improvement compris-

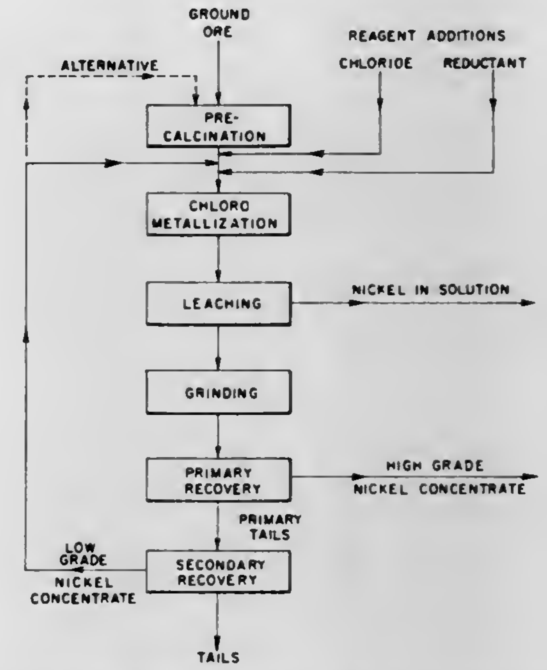

ing incorporating added metallic iron as at least a component of such a reducing agent, and depositing at least a portion of such metal upon such iron.

4,062,676
GOLD ALLOY FOR FIRING ON PORCELAIN FOR DENTAL PURPOSES
Helmut Knosp, Pforzheim, Germany, assignor to Deutsche Gold- und Silber-Scheideanstalt Vormals Roessler, Frankfurt, Germany
Filed July 6, 1976, Ser. No. 702,729
Int. Cl.[2] C22C *5/02*
U.S. Cl. 75—165 11 Claims

1. A gold alloy suitable to have porcelain fired thereon consisting of 60 to 90% gold, 5 to 35% platinum, 0.1 to 3% indium, 0 to 10% palladium, 0 to 3% tin, 0.5 to 3% rhodium, 0.1 to 2% of at least one member of the group consisting of tantalum and tungsten, and 0.3 to 2% zinc, the weight ratio of the platinum group metals to zinc to said member being 15–30:1:0.5–1.3.

4,062,677
TUNGSTEN-TITANIUM-ALUMINUM MASTER ALLOY
Frederick H. Perfect, Wyomissing, Pa., assignor to Reading Alloys, Inc., Robesonia, Pa., a part interest
Filed Sept. 16, 1976, Ser. No. 723,933
Int. Cl.[2] C22C *27/04*
U.S. Cl. 75—176 2 Claims

1. A tungsten-titanium-aluminum master alloy for use in making titanium base alloys comprising from about 55 to about 70% tungsten, about 2 to about 10% titanium, balance substantially aluminum.

4,062,678
POWDER METALLURGY COMPACTS AND PRODUCTS OF HIGH PERFORMANCE ALLOYS
Dennis G. Dreyer, Kokomo; Edward M. Foley, Russiaville, and Herbert E. Rogers, Jr., Sharpsville, all of Ind., assignors to Cabot Corporation, Kokomo, Ind.
Division of Ser. No. 443,091, Jan. 17, 1974, which is a continuation-in-part of Ser. No. 323,502, Jan. 15, 1973, Pat. No. 3,846,126. This application May 19, 1976, Ser. No. 688,013
The portion of the term of this patent subsequent to Nov. 5, 1991, has been disclaimed.
Int. Cl.[2] B22F *3/00*
U.S. Cl. 75—228 1 Claim

1. A sintered powder metal article of a high performance

metal alloy characterized by high density and properties equivalent or superior to those of a cast article of like alloy and produced by the steps comprising mixing alloy powder with a dry, finely divided organic binder in amounts not greater than about 5% by weight of the alloy powder so as to obtain a uniform dispersion of binder in the alloy powder, then adding a solvent for the binder in amount sufficient to form a plastic mixture with the alloy powder and binder, then consolidating the plastic mixture under pressure to a bulk density intermediate that of the powder and that of the cast alloy, then drying the consolidated mixture to evaporate the solvent, then crushing the consolidated mixture to discrete agglomerates of alloy powder particles, then filling a die of the desired shape with those agglomerates, then compacting the agglomerates in the die to at least 50% of the cast density of the alloy, so as to produce a coherent green compact, then removing the compact from the die, and then sintering the green compact at a temperature between the solidus and the liquidus temperature of the alloy.

4,062,679

EMBRITTLEMENT-RESISTANT TANTALUM WIRE

Harold G. Marsh, Libertyville, Ill., and James A. Pierret, Muskogee, Okla., assignors to Fansteel Inc., North Chicago, Ill.

Filed Mar. 29, 1973, Ser. No. 345,956

Int. Cl.² B22F *3/00*

U.S. Cl. 75—245 **5 Claims**

1. In a wrought tantalum product of, substantially pure tantalum containing less than 300 parts per million of columbium, less than 200 parts per million of iron, chromium and nickel combined, less than 50 parts per million of tungsten, less than 10 parts per million of molybdenum, less than 30 parts per million of chromium, and less than 20 parts per million of calcium, the improvement which comprises the inclusion of from about 50 to about 700 parts per million of silicon in the composition of said prodúct whereby said product is improved in resistance to embrittlement when exposed to elevated temperatures in an oxygen-containing environment.

4. A tantalum wire composed of substantially pure tantalum containing less than 300 parts per million of columbium, less than 200 parts per million of iron, chromium and nickel combined, less than 50 parts per million of tungsten, less than 10 parts per million of moybdenum, less than 30 parts per million of chromium, and less than 20 parts per million of calcium, said metal containing from about 50 to about 700 parts per million of silicon.

4,062,680

IMAGING PROCESS EMPLOYING ELECTRICAL OR MAGNETIC REVERSE MIGRATION FORCE AND SOFTENABLE MATERIALS

William L. Goffe, Webster, N.Y., assignor to Xerox Corporation, Stamford, Conn.

Division of Ser. No. 454,515, March 25, 1974. This application Apr. 1, 1975, Ser. No. 564,187

Int. Cl.² G03G *16/00*

U.S. Cl. 96—1 PS **42 Claims**

1. A reversal migration imaging process comprising:

a. providing an imaging member comprising a substrate, a layer of substantially electrically insulating softenable material on said substrate, said softenable material containing a layer of migration material contiguous an interface of said softenable material and said substrate, said softenable material capable of having its resistance to migration of migration material decreased sufficient to allow migration of migration material in said softenable material;

b. applying a reverse electrical magnetic imagewise migration force to said migration material sufficient to cause imagewise migration of the migration material away from the interface and toward the free surface; and

c. developing said imaging member by decreasing the resistance to migration of migration material in depth in the softenable layer at least sufficient to allow imagewise migration away from said interface of said softenable material and said substrate toward the free surface of the softenable material.

4,062,681

ELECTROPHOTOGRAPHIC ELEMENT HAVING A HYDROPHOBIC, CURED, HIGHLY CROSS-LINKED POLYMERIC OVERCOAT LAYER

William C. Lewis; Robert P. Darrow, and William E. Yoerger, all of Rochester, N.Y., assignors to Eastman Kodak Company, Rochester, N.Y.

Continuation-in-part of Ser. No. 275,665, June 27, 1972, abandoned. This application Mar. 9, 1973, Ser. No. 339,681

Int. Cl.² G03G *5/14*

U.S. Cl. 96—1.5 N **11 Claims**

1. In an electrophotographic element comprising an electrically conductive support having thereon a photoconductive insulating composition and an electrically insulating overcoat layer for said photoconductive composition, the improvement wherein said overcoat layer comprises a hydrophobic, cured, highly cross-linked polymeric material formed in situ by cross-linking a composition consisting essentially of a cross-linking polymeric composition and at least 20 percent by weight of an organic cross-linking agent therefor, said highly cross-linked polymeric material being the reaction product of said cross-linking agent and said cross-linkable polymeric composition, said polymeric composition comprising a member selected from the group consisting of:

a. a polymer of at least one α,β-ethylenically unsaturated carboxylic acid or the alkyl half ester thereof,

b. a copolymerized blend comprising at least 25% by weight of a α,β-ethylenically unsaturated carboxylic acid or the alkyl half ester thereof and at least one other organic compound comprising 3 to about 20 carbon atoms and a polymerizable ethylenically unsaturated hydrocarbon moiety, and

c. a blend comprising at least 25 percent by weight of a polymer of at least one α,β-ethylenically unsaturated carboxylic acid or the alkyl half ester thereof and a polymer of at least one other organic compound comprising 3 to about 20 carbon atoms and a polymerizable ethylenically unsaturated hydrocarbon moiety.

4,062,682

FIXER COMPOSITIONS USED IN PLANOGRAPHIC PRINTING CONTAINING ONIUM COMPOUNDS

Urbain Leopold Laridon, Wilrijk; Rene Alois Van Brandt, Kessel, and Albert Lucien Poot, Kontich, all of Belgium, assignors to AGFA-GEVAERT N.V., Mortsel, Belgium

Filed July 29, 1975, Ser. No. 600,121

Claims priority, application United Kingdom, Nov. 12, 1974, 48944/74

Int. Cl.² G03C *5/54;* **G03F** *7/02;* **B41M** *5/00;* **B41N** *3/00*

U.S. Cl. 96—29 L **11 Claims**

1. A method for the preparation of a planographic printing plate wherein a sheet material comprising an outer hardenable hydrophilic colloid layer on whose surface is concentrated a visible silver image that has been formed thereon from silver halide complexes according to the silver complex diffusion transfer process, is treated with an aqueous lithographic fixer having a pH in the range of 1.0 to 6.5 and containing

1. an iron (III) salt of a polyaminopolycarboxylic acid as oxidizing agent for the silver image,
2. a compound yielding in dissolved state iodide ions as precipitating agent for silver ions, and
3. an organic onium compound, which liquid imparts a stronger ink-receptivity to the silver image areas for a lithographic ink as defined hereinafter than the same liquid which is free from ingredient (3), the type and concentration of said organic onium compound in said liquid being such that said liquid is capable of making a silver

image, which is obtained through said silver halide complex diffusion transfer process on an image-receiving layer as described hereinafter, by treating it for 8 s at 22° C sufficiently ink-receptive for said lithographic ink to form on a lithographic press in printing position with said lithographic ink an ink deposit on paper used in lithographic printing of an optical density at least 0.5 higher than obtained with the same liquid being free from ingredient (3), the image-receiving layer being coated at 20 g per sq.m from:

water	890 ml
12.5 % by weight aqueous solution of saponin	10 ml
aqueous dispersion of colloidal nickel sulphide comprising 0.2 g of nickel sulphide and 10 g of gelatin	100 ml

onto a supported gelatino-silver chlorobromide (1.5 mole % Br) emulsion layer having a silver halide content equivalent with 1 g of silver nitrate per sq.m and wherein the ratio by weight of gelatin to silver halide (expressed as silver nitrate) is 10 to 3; and said lithographic ink having the following composition:

	parts by weight
Lake Red C (C.I. 15,585)	80
styrenated linseed-tung oil alkyd of 60 percent oil length and 10 percent styrene content	100
aliphatic petroleum having a boiling range of 260–290° C	50
lead naphthenate	1
cobalt naphthenate	0.12

4,062,683

PHOTOGRAPHIC MATERIAL CONTAINING 3-ANILINO-5-PYRAZOLYLALKYLCARBONATE OR ARYLCARBONATE COUPLERS

Marcel Jacob Monbaliu, Mortsel; Raphaël Karel Van Poucke, Berchem; Roger Henri Vrydaghs, Ekeren, all of Belgium; Hans-Heinrich Credner, and Ernst Meier, both of Munich, Germany, assignors to AGFA-GEVAERT N.V., Mortsel, Belgium

Filed May 27, 1976, Ser. No. 690,584

Claims priority, application Germany, May 30, 1975, 2523882

Int. Cl.² G03C *7/00, 1/40*

U.S. Cl. 96—56.5 **5 Claims**

1. Light-sensitive material comprising at least one silver halide emulsion layer and a 3-anilino-5-pyrazolyl carbonate according to the following general formula:

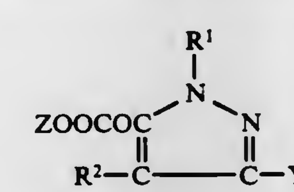

in which:

Z represents an alkyl or aryl group.

Y represents an anilino group,

R^1 represents an alkyl group having 1–22 carbon atoms, or an aryl group,

R^2 represents hydrogen, an alkyl group, halogen, sulpho, alkoxy, aryloxy, acyloxy, alkylthio, arylthio, a heterocyclic thio group, an arylazo group, or a benzotriazolyl group.

4,062,684

METHOD FOR FORMING IMAGES BY A STABILIZED COLOR INTENSIFYING TREATMENT

Hiroshi Hara; Keiichi Adachi, and Hideyuki Kusaba, all of Minami-ashigara, Japan, assignors to Fuji Photo Film Co., Ltd., Minami-ashigara, Japan

Filed July 23, 1976, Ser. No. 708,249

Claims priority, application Japan, July 23, 1975, 50-89898

Int. Cl.² G03C *5/32*

U.S. Cl. 96—60 R **25 Claims**

2. The process involving color image-formation followed by photographic processing including color developing which comprises contacting an image-wise exposed color photographic element comprising a support having thereon at least one silver halide emulsion layer containing im age-wise distributed silver catalyst nuclei with an intensifying bath containing at least one highly active intensifying agent comprising a halogenous acid or a peroxide in the presence of a reducing agent, which is in a processing bath or the element and in the presence of a color former, and thereby image-wise oxidizing the reducing agent to thereby conduct image intensification through said oxidized reducing agent, the improvement wherein said intensifying bath comprises at least one nitrogen-containing heterocyclic compound having no mercapto group and which possesses an anti-fogging effect, bromide ions in an amount of 1×10^{-4} gram ion/liter or more, and said highly active intensifying agent in an amount of 0.25 mol/liter or more, wherein said nitrogen-containing heterocyclic compound is of the formula: ,02/0510

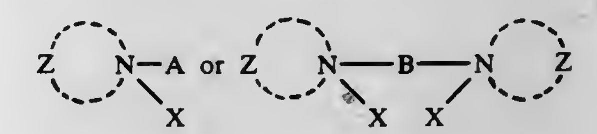

wherein Z is a non-metallic group comprising carbon, nitrogen, oxygen, sulfur or selenium, which forms a 5- or 6-membered heterocyclic ring or a heterocyclic ring condensed with a 5- or 6-membered ring, X is an anion other than iodide, A is a substituted or unsubstituted alkyl group having 1 to 4 carbon atoms wherein said substituent is a hydroxyl group, an alkoxy group having 1 to 4 carbon atoms, a carboxy group, or a sulfo group; or A is an alkenyl group having 2 to 10 carbon atoms, an alkynyl group having 2 to 10 carbon atoms, a cycloalkyl group having 5 to 10 carbon atoms, or a substituted or unsubstituted aryl group wherein said substituent is a hydroxy group, an alkoxy group having 1 to 4 carbon atoms or alkyl group having 1 to 4 carbon atoms, and B is $-(CH_2)_n-$, $-CH_2O-(CH_2)_n-OCH_2-$,

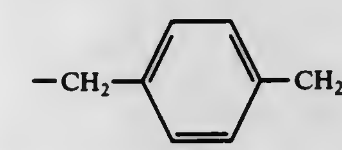

or $-CH_2OCH_2-$, wherein n is an integer of 1 to 12.

4,062,685

NON-SILVER HALIDE LIGHT-SENSITIVE MATERIAL SENSITIZED BY COLLOIDAL ELEMENTS

Keiji Takeda; Kenji Matsumoto; Hiroshi Tamura, and Masayoshi Nagata, all of Asaka, Japan, assignors to Fuji Photo Film Co., Ltd., Ashigara, Japan

Filed May 6, 1976, Ser. No. 683,876

Claims priority, application Japan, May 7, 1975, 50-55073

Int. Cl.² G03C *1/00*

U.S. Cl. 96—88 **16 Claims**

1. A light-sensitive material for image-forming which comprises a support having coated thereon at least one layer comprising an organo-tellurium compound, as the image-forming material; a sensitizer for said organo-tellurium compound selected from the group consisting of a quinone compound, a

ketone compound, a photoconductive dye and a photoreductive metal salt; a polymeric binder; and colloidal particles of an element selected from the group consisting of gold, tellurium, germanium, palladium, platinum or mixtures or alloys thereof.

4,062,686

SENSITIZERS FOR PHOTOCROSSLINKABLE POLYMERS

James Albert Van Allan; Michael Paul Cunningham, both of Rochester; Donald Paul Specht, Spencerport, and Samir Yacoub Farid, Rochester, all of N.Y., assignors to Eastman Kodak Company, Rochester, N.Y.

Filed Apr. 21, 1976, Ser. No. 678,805

Int. Cl.[2] G03C *1/68*

U.S. Cl. 96—115 R **26 Claims**

1. A photosensitive composition comprising a light-sensitive material selected from nonpolymeric compounds having ethylenic unsaturation and polymers containing in the backbone or in pendant groups, moieties that have ethylenic unsaturation; and a sensitizing amount of a sensitizer of the following formula:

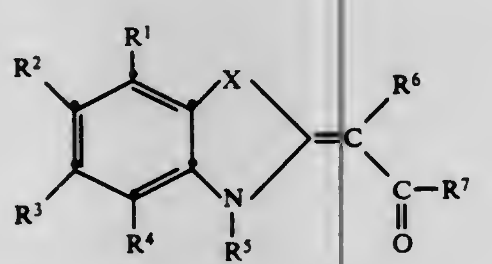

wherein X is a sulfur or a selenium atom; R^1, R^2, R^3 and R^4 independently represent hydrogen, lower alkoxy of 1 to 4 carbon atoms or taken together R^1 and R^2, R^2 and R^3, R^3 and R^4 constitute the atoms needed to complete a fused benzo ring; R^5 represents lower alkyl of 1 to 4 carbon atoms; R^6 represents ,03/0040

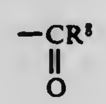

where R^8 is a heterocyclic group such as furyl or thienyl; R^7 is heterocyclyl such as furyl or thienyl.

4,062,687

PHOSPHORIC ACID DERIVATIVES AS FLAMEPROOFING AGENTS

Claudine Mauric, Basel, and Rainer Wolf, Allschwil, both of Switzerland, assignors to Sandoz Ltd., Basel, Switzerland

Filed May 26, 1976, Ser. No. 689,970

Claims priority, application Switzerland, May 30, 1975, 6992/75; Aug. 22, 1975, 10908/75; Nov. 5, 1975, 14262/75; Nov. 18, 1975, 14918/75; Nov. 27, 1975, 15387/75

Int. Cl.[2] C09K *15/32, 15/30, 15/26*

U.S. Cl. 106—15 FP **10 Claims**

1. Flameproofed cellulose containing as a flameproofing agent, a compound of the formula

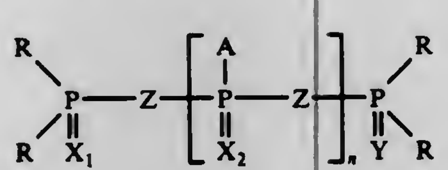

in which each R, independently, is a radical-OR_1 (a) or

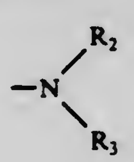

(b),

or two moieties R bound to the same phosphorus atom form a radical (c),

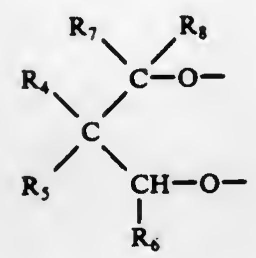

(c)

and each of the other two moieties R, independently, is a radical (a) or (b), or the other two moieties R bound to the same phosphorus atom form a second radical (c), independent from the first radical (c),

each of X_1, X_2, Y and Z, independently, is oxygen or sulphur,

n is zero or 1,

A is a radical

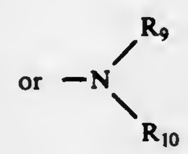

(d),

each R_1, independently, is methyl; ethyl or propenyl, each unsubstituted or substituted with up to 3 halogen atoms or with a (C_{1-6})alkoxy group; (C_{3-12})alkyl or (C_{4-12})alkenyl, each unsubstituted or substituted with up to 4 halogen atoms; (C_{5-8})cycloalkyl or (C_{5-8})cycloalkyl-(C_{1-4})alkyl, containing 7–9 carbon atoms in toto, each unsubstituted or substituted with 1 or 2 halogen atoms; or phenyl or phenyl-(C_{1-4})alkyl, each unsubstituted or substituted aromatically with up to 5 halogen atoms or with up to 3 (C_{1-3})alkyl and/or (C_{1-3})alkoxy groups,

each R_2, independently, is (C_{1-4})alkyl, cyclohexyl or benzyl; or phenyl, unsubstituted or substituted with 1 or 2 chlorine atoms of which only one can occupy an ortho-position, with a bromine atom in the para-position, or with up to 2 (C_{1-3})alkyl and/or (C_{1-3}) alkoxy groups, the aggregate of the carbon atoms thereof not exceeding 3,

each R_3, independently, is (C_{1-4})alkyl or hydrogen,

or any R_2 and R_3, independently, together with the nitrogen atom to which they are bound, form a 5- or 6-membered, saturated heterocyclic ring which may contain as a ring member an oxygen or sulphur atom, or a second nitrogen atom to which is bound a (C_{1-4})alkyl group,

each R_4 and R_5, independently, is hydrogen, (C_{1-4})alkyl, CH_2Cl, CH_2Br or phenyl,

or any R_4 and R_5, independently, together with the carbon atom to which they are bound, form a cyclohexylidene, cyclohexenylidene or 3,4-dibromocyclohexylidene ring,

each R_6 and R_8, independently, is hydrogen or (C_{1-4})alkyl,

each R_7, independently, is hydrogen or methyl, R_9 is methyl; ethyl, unsubstituted or substituted with a halogen atom; propyl, unsubstituted or substituted with 1 or 2 halogen atoms; (C_{4-12})alkyl, unsubstituted or substituted with up to 3 halogen atoms; cyclohexyl; benzyl; or phenyl, unsubstituted or substituted with 1 or 2 chlorine atoms, or with a bromine atom in the para-position, and/or in both cases with up to 2 (C_{1-3})alkyl and/or (C_{1-3})alkoxy groups, the aggregate of the carbon atoms thereof not exceeding 3,

R_{10} is hydrogen; methyl; ethyl, unsubstituted or substituted with a halogen atom; propyl, unsubstituted or substituted with up to 2 halogen atoms; (C_{4-12})alkyl, unsubstituted or substituted with up to 3 halogen atoms; cyclohexyl; benzyl; or phenyl,

or R_9 and R_{10}, together with the nitrogen atom to which they are bound, form a 5- or 6-membered, saturated heterocyclic ring which may contain as a ring member an oxygen or sulphur atom, or a second nitrogen atom, to which is bound a (C_{1-4})alkyl group,

with the provisos:

i. when one or more of X_1, X_2 and Y is oxygen, then Z can only be oxygen,

ii. when X_1 and Y are both oxygen, then up to 2 only of the moieties R can be a radical (a),

iii. when there are more than 2 radicals (a) in the molecule, up to 2 of them only can be methoxy,

iv. when Z is oxygen and *n* is zero, only one radical (c) can be present in the molecule,

v. when X_1 or Y is oxygen, then R_2 in any radical (b) attached to that same phosphorus atom as the oxygen atom is other than alkyl,

vi. when two radicals (b) are attached to a phosphorus atom and X_1 or Y attached to that same phosphurus atom is sulphur, then both of the moieties R_2 in these radicals (b) are (C_{1-4})alkyl,

vii. when *n* is 1, or when *n* is zero and R_2 in any radical (b) is (C_{1-4})alkyl, any R_3, or R_3 in that same radical (b), respectively, is other than hydrogen,

viii. at least one of R_4, R_5, R_6, R_7 and R_8 in any radical (c) is other than hydrogen,

ix. when each of R_4 and R_5, independently, in any radical (c) is CH_2Cl or CH_2Br or both R_4 and R_5, together with the carbon atom to which they are bound form one of the rings indicated above, each of R_6, R_7 and R_8 in the same radical (c) is hydrogen,

and x. when each of X_1 and Y is oxygen, each of R_4 and R_5, independently, in any radical (c) is CH_2Cl or CH_2Br or both R_4 and R_5, together with the carbon atom to which they are bound, form one of the rings indicated above.

4,062,688

SET OF BASIC PRINTING INKS FOR PRODUCING COLOR TONES BY PRINTING METHODS

Ernst E. Schumacher, Gruneburgweg 129, D6 Frankfurt am Main 1, Germany

Filed Nov. 15, 1976, Ser. No. 741,780

Claims priority, application Germany, Nov. 18, 1975, 2551689

Int. Cl.[2] B41M *1/14;* C09D *11/02*

U.S. Cl. 106—20 **6 Claims**

1. A basic set of inks for producing color tones by printing methods, the set comprising four individual colored inks having a degree of spectral affinity with each other characterized, for each pair of adjacent inks, by the quotient of the wavelengths of their maximum spectral densities being in no case more than 1.18 or less than 0.85.

4,062,689

GLASS COMPOSITION WHICH IS RESISTANT TO ALKALI

Yoshiro Suzuki, Tokyo; Hironori Ohta, and Masuo Shirasaka, both of Yokohama, all of Japan, assignors to Asahi Glass Company Ltd., Tokyo, Japan

Filed Apr. 1, 1976, Ser. No. 672,541

Claims priority, application Japan, Apr. 11, 1975, 50-43323; Apr. 11, 1975, 50-43324

Int. Cl.[2] C03C *3/04, 13/00;* C04B *31/06*

U.S. Cl. 106—50 **6 Claims**

1. A glass composition consisting of

SiO_2:45–65 wt.%
ZrO_2:10–20 wt.%
Cr_2O_3:0–5 wt.%
SnO_2:0–5 wt.%
RO:0–18 wt.%
R'_2O:0–18 wt.%
SO_3:0.05–1 wt.%

and less than 3 wt.% of a refining agent or impurities, wherein the sum of contents of $Cr_2O_3 + SnO_2$ is 0.5–10 wt.% and the sum of contents of $ZrO_2 + SnO_2 + Cr_2O_3$ is 12–25 wt.% and RO is selected from the group consisting of CaO, MgO, ZnO, BaO and SrO; and R'_2O is selected from the group consisting of K_2O of 0–5 wt.%, Na_2O of 0–18 wt.% and Li_2O of 0–5 wt.%.

4,062,690

COATING COMPOSITIONS FOR GLASS FIBRES

Kenneth Leslie Litherland, Ormskirk; Phillip Maguire, Liverpool, and Colin Jones Cheetham, Ormskirk, all of England, assignors to Pilkington Brothers Limited, St. Helens, England

Filed Jan. 2, 1976, Ser. No. 646,082

Claims priority, application United Kingdom, Jan. 2, 1975, 88/75

Int. Cl.[2] C04B *7/02*

U.S. Cl. 106—98 **14 Claims**

1. Glass fibres for use as reinforcement in inorganic cementitious products, said fibres being coating with a composition containing at least one monocyclic or polycyclic aromatic compound which has at least three hydroxyl groups on the aromatic ring or, in a polycyclic compound, on at least one of the aromatic rings, and at least one partially-cured water-dilutable A-stage phenol-formaldehyde resole resin.

4. Inorganic cementitious products reinforced with coated glass fibres according to claim 1.

4,062,691

METHOD FOR THE THERMAL TREATMENT OF FINELY GRANULAR MATERIAL, PARTICULARLY FOR THE CALCINING OF CEMENT

Kunibert Brachthauser, Bensberg; Hubert Ramesohl, Bensberg-Refrath; Klaus Beisner, Hoffnungsthal, and Horst Herchenbach, Troisdorf, all of Germany, assignors to Klockner-Humboldt-Deutz Aktiengesellschaft, Germany

Continuation-in-part of Ser. No. 665,327, March 9, 1976. This application Apr. 21, 1976, Ser. No. 678,951

Claims priority, application Germany, Apr. 21, 1975, 2517552

Int. Cl.[2] C04B *7/36*

U.S. Cl. 106—100 **6 Claims**

1. A process for thermally treating fine grained material for the calcining of cement in stages comprising:

passing finely ground calcareous and argillaceous material into a preheating zone at a controlled rate;

heating the material in the preheating zone to obtain a deacidification of the material in the range of 50% to 80%;

and subsequently feeding the deacidified material to a kiln for completion of the burning process.

4,062,692

CHALKING-RESISTANT TITANIUM DIOXIDE PIGMENT

Heinz-Peter Hemmerich; Hans Jürgen Rosenkranz; Wolfgang Papenroth, and Aloys Klaeren, all of Krefeld, Germany, assignors to Bayer Aktiengesellschaft, Leverkusen, Germany

Filed May 5, 1976, Ser. No. 683,577

Claims priority, application Germany, May 23, 1975, 2522987

Int. Cl.[2] C09C *1/36*

U.S. Cl. 106—300 **6 Claims**

1. In the production of a chalking-resistant titanium dioxide pigment by organic aftertreatment with a vinyl polymer in aqueous phase, separation of the aqueous phase and drying, the improvement comprising mixing the titanium dioxide pigment with a vinyl polymer in form of an aqueous latex, thereby applying the vinyl polymer to the pigment in quantities of at least about 0.1% by weight based on the final pigment, the water content of the mixture being at least about 30% by weight, and then coagulating the latex to separate the polymer-containing pigment from the aqueous phase.

4,062,693
DRY LIQUID ALUMINA TRIHYDRATE CONCENTRATES
Sidney Ethan Berger, Rye, N.Y., assignor to Union Carbide Corporation, New York, N.Y.
Filed Sept. 29, 1976, Ser. No. 727,672
Int. Cl.² C09C *1/40*
U.S. Cl. 106—308 Q **10 Claims**

1. A composition comprising aluminum trihydrate particles containing on their surfaces a concentrated amount of silane, its hydrolyzates or resulting condensate, which silane possesses at least two to about three hydrolyzable groups bonded to the silicon thereof and an organic group which contains a polyalkylene oxide group, said concentrated amount of silane being at least greater than 5 and up to about 35 weight percent of the composition.

4,062,694
STABLE PARTICULATE SUSPENSIONS
Edgar W. Sawyer, Jr., Hagerstown, Md., assignor to International Telephone and Telegraph Corporation, Nutley, N.J.
Continuation of Ser. No. 595,471, July 14, 1975, abandoned. This application Nov. 29, 1976, Ser. No. 745,746
Int. Cl.² C09C *3/00*
U.S. Cl. 106—309 **5 Claims**

1. A method for forming a stable homogeneous suspension between water and particles not readily wet by water and employing a floculated clay suspending agent comprising the steps of:
adding 0.1 to 0.5% by weight of a wetting type dispersing agent to water to disperse the particles without dispersing clay;
adding the particles to the water in an amount equal to at least 60% of the total weight of the suspension to form a mixture between the water and the particles; and
adding a gelling grade clay in an amount from 1 to 3% based on the total suspension weight to suspend the particles in water.

4,062,695
METHOD AND APPARATUS FOR TREATING SUGAR-WORKS MOLASSES
Robert Pieck, Tienen, Belgium, assignor to Raffinerie Tirlemontoise, Brussels, Belgium
Filed May 7, 1976, Ser. No. 684,212
Claims priority, application France, May 12, 1975, 75.14713
Int. Cl.² C13J *1/04*
U.S. Cl. 127—9 **3 Claims**

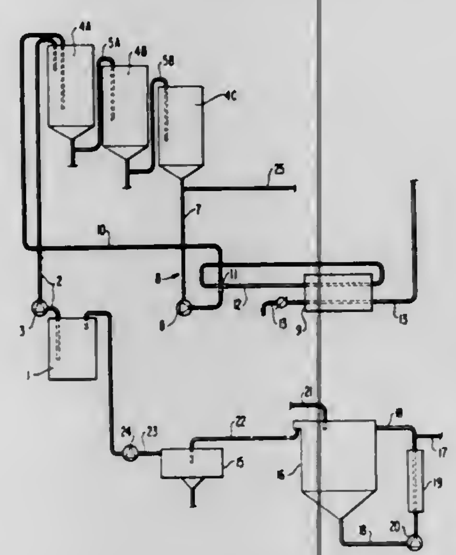

1. In a sugar-works-molasses treatment installation comprising:
a second stage reaction tank,
means for supplying water-diluted molasses from a first stage to said second stage reaction tank,
means for adding quicklime to the water-diluted molasses in said second stage reaction tank to form a water-diluted molasses quicklime solution,
means for cooling said solution at said second stage reaction tank to precipitate cool saccharate therefrom,
means for filtering cool saccharate from said second stage to form cool filtrate,
a storage tank for holding cool filtrate
means for delivering said cool filtrate from said second stage filter means to said cool filtrate storage tank,
at least one mixing tank,
means for supplying cool filtrate from said storage tank to said at least one mixing tank,
a recycling circuit comprising an outlet pipe leading from the bottom of said at least one mixing tank and returning to that tank, said mixing tank comprising an enclosure for precipitating hot saccharate, and
means for increasing the temperature of the cool filtrate to the hot saccharate precipitating temperature to effect precipitation of hot saccharate within said enclosure and to form a hot saccharate-mother liquor suspension, the improvement wherein:
said means for increasing the temperature of the cool filtrate to the hot saccharate precipitation temperature comprises at least one surface heat exchanger within said recycling circuit and in contact with the mother liquor-hot saccharate suspension being recirculated to said at least one mixing tank for increasing the temperature of recirculated mother liquor-hot saccharate suspension at said heat exchanger and in the absence of cool filtrate to a temperature sufficient to subsequently bring the cool filtrate in said enclosure to the precipitating temperature of the hot, and
duct means branching from the outlet duct of said at least one mixing tank for permitting only a portion of the mother liquor-hot saccharate suspension available from said at least one mixing tank to pass through said recycling circuit;
whereby, all of the hot saccharate precipitation occurs within said at least one mixing tank remote from the surface of said surface heat exchanger.

4,062,696
PURIFICATION OF CONTAMINATED ALUMINA SCAVENGERS OF ALUMINUM REDUCTION CELL EFFLUENT DRY SCRUBBER SYSTEMS
Hebon J. Ducote, Saratoga, Calif., assignor to Kaiser Aluminum & Chemical Corporation, Oakland, Calif.
Filed July 27, 1976, Ser. No. 709,025
Int. Cl.² B08B *3/12*
U.S. Cl. 134—1 **9 Claims**

1. In the process of removing metallic and nonmetallic impurities from contaminated alumina scavengers recovered from dry scrubber systems used for purification of aluminum reduction cell effluents, the improvement which comprises preparing a slurry from the contaminated alumina scavenger and a liquid selected from the group consisting of water, polar and nonpolar organic solvents, subjecting the slurry to an ultrasonic treatment at a frequency of at least about 10 kHz for a time period sufficient to remove a desired quantity of metallic and nonmetallic impurities from the alumina scavenger, separating the liquid containing these impurities in dispersed form from the treated scavenger, recovering purified solid alumina of significantly reduced impurity content and recycling the purified alumina to the aluminum reduction cell or to the dry scrubber system.

4,062,697
METHOD AND APPARATUS FOR COUNTERCURRENT WASHING OF PARTICULATE SOLIDS
Walter Egli, and Otto Douglas Erlandson, both of San Diego, Calif., assignors to General Atomic Company, San Diego, Calif.
Filed Dec. 30, 1976, Ser. No. 755,644
Int. Cl.² B08B *3/04*
U.S. Cl. 134—10 **14 Claims**

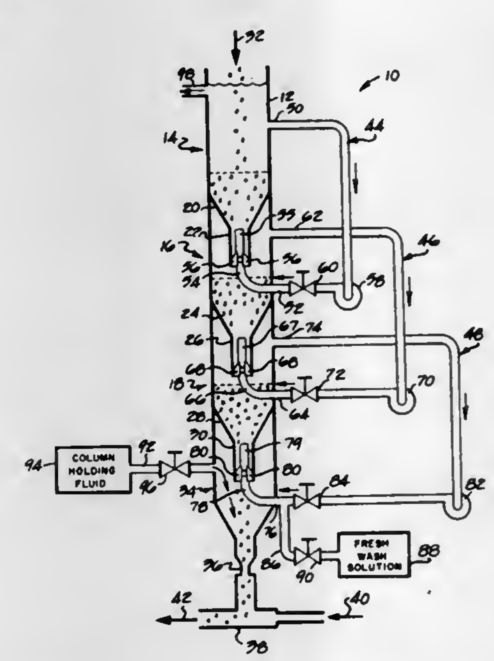

10. In a method of washing particulate solids to remove foreign material, the steps comprising,
forming a washing tower with a plurality of washing sections arranged one above the other and an outlet section at the base of the tower, each washing section including a restricted opening at its lower end,
introducing fresh washing solution into the washing tower beneath the restricted opening for the lowermost washing section,
withdrawing washing solution from an upper portion of each washing section and recirculating said withdrawn washing solution for introduction through the restricted opening in the bottom of the respective washing section,
regulating the rate of washing solution recirculation for each washing section in order to selectively adjust the dwell time for particulate solids in each respective washing section, and
restricting passage of particulate solids from the outlet section of the wash tower in order to regulate the flow of washing solution in the tower.

4,062,698
PHOTOELECTRICAL CONVERTER
A. Eugene Blakeslee, Mount Kisco, and Harold John Hovel, Katonah, both of N.Y., assignors to International Business Machines Corporation, Armonk, N.Y.
Filed Nov. 3, 1976, Ser. No. 738,519
Int. Cl.² H01L *31/06*
U.S. Cl. 136—89 PC **12 Claims**

1. A photoresponsive device comprising in combination
a device body having first and second major parallel opposed surfaces,
a photoresponsive active region comprising semiconductor material along said first major surface;
a region of electrically insulating material in each said device epitaxial with said active region and separating said active region from said second major surface;
a thermally absorbing member; and
means bonding said second major surface to said thermally absorbing member.

12. An array of photoresponsive devices comprising in combination a thermal absorbing member, a plurality of device bodies each having first and second major parallel opposed surfaces, a photoconversion active region parallel to a first major surface of each said device, a region of electrically

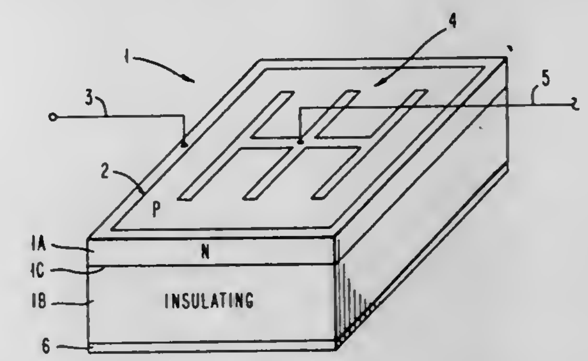

insulating material in each said device body epitaxial with its said active region and separating its said active region from its said second major surface, means bonding said second major surface of each device body to said thermal absorbing member, means serially connecting groups of said photoconversion active regions to provide additive voltages and further means connecting serially-connected group pathways in parallel to provide additive currents.

4,062,699
METHOD FOR FABRICATING DIFFUSION SELF-ALIGNED SHORT CHANNEL MOS DEVICE
William Eddie Armstrong, Mission Viejo, Calif., assignor to Western Digital Corporation, Newport Beach, Calif.
Filed Feb. 20, 1976, Ser. No. 659,677
Int. Cl.² H01L *21/265, 29/78*
U.S. Cl. 148—1.5 **5 Claims**

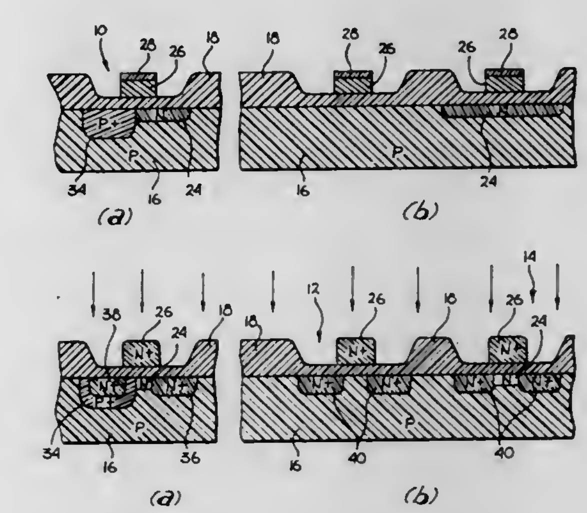

1. A method for simultaneously forming at least two types of self-aligned MOS devices in predetermined locations in a doped semiconductor substrate having at least one insulating layer disposed thereon, said types of MOS devices including a diffusion self-aligned, short channel device, a low body effect device and a depletion device, comprising the steps of:
selectively disposing a dopant into the upper portion of said semiconductor substrate to form a channel region in each of said predetermined locations corresponding to said depletion devices and diffusion self-aligned short channel devices, said dopant having a conductivity type opposite to that of said semiconductor substrate;
selectively disposing a layer of semiconductor material on said insulating layer in each of said predetermined locations;
selectively disposing a dopant into a selected portion of each of said channel regions of said diffusion self-aligned short

channel devices to form an impurity region in each of said diffusion self-aligned short channel devices, said dopant having the same conductivity type as said semiconductor substrate, said impurity region extending into said semiconductor substrate more deeply than said channel regions and extending beneath said layer of semiconductor material; and

selectively disposing a dopant into a portion of each of said channel regions in said predetermined locations corresponding to said depletion devices, into a portion of each of said impurity regions and channel regions in said predetermined locations corresponding to said diffusion self-aligned short channel devices, and into a portion of said semiconductor substrate in said predetermined locations corresponding to said low body effect devices, active regions being formed in each corresponding predetermined location by said dopant, said dopant having an opposite conductivity to that of said semiconductor substrate.

4,062,700

METHOD FOR PRODUCING A STEEL SHEET WITH DUAL-PHASE STRUCTURE COMPOSED OF FERRITE- AND RAPIDLY-COOLED-TRANSFORMED PHASES

Satohiro Hayami, Yokohama; Takashi Furukawa, Machida, and Yoshihiko Takeoka, Kawasaki, all of Japan, assignors to Nippon Steel Corporation, Tokyo, Japan

Filed Dec. 30, 1975, Ser. No. 645,473

Claims priority, application Japan, Dec. 30, 1974, 50-1028

Int. Cl.² C21D *7/14*

U.S. Cl. 148—12.3 **8 Claims**

1. A method for producing a steel sheet having a dual-phase structure composed of (b 1) a ferrite phase and (2) a transformed phase member selected from the group consisting of (a) a martensite phase, (b) a bainite phase and (c) both a martensite phase and a bainite phase, which method comprises

pretreating a steel sheet, containing 0.03 to 0.15% carbon, 0.7 to 2.0% manganese and less than 0.7% silicon, by finish hot rolling the steel sheet with a finishing temperature only in the alpha-gamma temperature range, with a reduction not higher than 40% in the alpha-gamma temperature range, and coiling the finish hot rolled-steel sheet,

continuously annealing the pretreated steel sheet in the alpha-gamma temperature range, and

cooling the annealed steel sheet at a rate not higher than about 10,000° C/min.

4,062,701

METHOD OF FORMING END FLANGES

Joseph Aloysius Juhas, Litchfield, Conn., assignor to The Torrington Company, Torrington, Conn.

Filed Oct. 27, 1976, Ser. No. 736,095

Int. Cl.² C21D *9/08*

U.S. Cl. 148—12.1 **10 Claims**

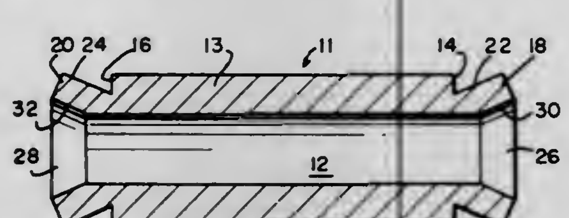

1. A method of forming at least one end flange on a cylinder having at least one end opening for receiving a flange forming tool comprising the steps of: shaping at least one end of the cylinder to provide an annular shoulder extending from the outside of the cylinder radially substantially perpendicular to the axis of the cylinder, and to provide an annular extension having an outside surface extending from the inside of said annular shoulder substantially to the end of the cylinder, the length of said outside surface being greater than the radial width of said annular shoulder; and then with a flange forming tool applying force against the free end of said annular extensions to move the annular extension until its outside surface is against the annular shoulder to provide a flange extending substantially perpendicularly to the axis of the cylinder.

4,062,702

PROCESS FOR PARTIALLY INSULATING SURFACES OF METAL WORK PIECES

Helmut Kunst, and Christian Scondo, both of Hanau, Germany, assignors to Deutsche Gold- und Silber-Scheideanstalt Vormals Roessler, Frankfurt, Germany

Filed Aug. 18, 1975, Ser. No. 605,296

Claims priority, application Germany, Aug. 29, 1974, 2441309

Int. Cl.² C21D *1/48;* **C22B** *35/00*

U.S. Cl. 148—14 **21 Claims**

1. A process for insulating portions of the surface area of a metal workpiece which is to be subjected to thermochemical treatment comprising coating predetermined portions of said workpiece with a self-adhesive fibrous textile tape made of organic material, having embedded in the adhesive layer thereof a metal powder and thereafter subjecting the workpiece to thermochemical treatment at a temperature sufficient to destroy said tape, said adhesive layer of the tape having a thickness of 25 to 250 microns and the metal powder having a thickness of 10 to 200 microns.

4,062,703

SAND CONTAINING FLUX

Joseph Vastag, Oakland, Calif., assignor to W. R. Grace & Co., Cambridge, Mass.

Filed Nov. 17, 1975, Ser. No. 632,209

Int. Cl.² B23K *35/34*

U.S. Cl. 148—26 **7 Claims**

1. A composition consisting of (a) about 1 to 50 parts by weight of ordinary sand, and (b) a zinc ammonium chloride flux, sand flux being further characterized by a minimum weight content of zinc chloride-ammonium chloride mixture of at least 60% and an ammonium chloride within the range of 10 to 35%.

4,062,704

ALUMINUM ALLOYS POSSESSING IMPROVED RESISTANCE WELDABILITY

Philip R. Sperry, North Haven, Conn.; William C. Setzer, Creve Coeur, Mo., and Lloyd E. Damon, Wallingford, Conn., assignors to Swiss Aluminium Ltd., Chippis, Switzerland

Filed July 9, 1976, Ser. No. 704,018

Int. Cl.² C22C *21/16*

U.S. Cl. 148—32 **12 Claims**

1. A wrought article exhibiting reduced electrical conductivity, increased electrical resistivity, improved resistance weldability plus good tensile properties prepared from an aluminum base alloy consisting essentially of from 2.2 to 3.0% copper, up to 1.5% iron, up to 1.2% silicon, up to 1.2% manganese, from 0.02 to 2.0% magnesium, and from 0.03 to 0.20% vanadium, balance aluminum, wherein vanadium is retained in solid solution.

4,062,705

METHOD FOR HEAT TREATMENT OF HIGH-TOUGHNESS WELD METALS

Hisashi Gondo; Hajime Nakasugi, both of Kisarazu; Turugi Kimura, and Masanobu Yamaguti, both of Kimitsu all of Japan, assignors to Nippon Steel Corporation, Tokyo, Japan

Filed July 29, 1974, Ser. No. 492,754

Claims priority, application Japan, July 31, 1973, 48-86246

Int. Cl.² C21D *9/50*

U.S. Cl. 148—127 **7 Claims**

1. A method for heat treating a formed article having a weld therein, the weld metal consisting essentially of not more than 0.15% C, 0.10 to 0.50% Si, 0.35 to 3.50% Mn, not more than 0.035% P, not more than 0.030% S, 0.01 to 0.25% Al, from 0.0115% to 0.0395% O, with the balance being iron and minor impurities, which comprises heating the weld metal obtained after welding from a temperature less than 600° C or a point wherein at least 60% of the ferrite-pearlite transformation has been attained to its austenitizing temperature for not longer than 25 minutes and cooling it to obtain a high toughness weld material.

4,062,706

PROCESS FOR III-V COMPOUND EPITAXIAL CRYSTALS UTILIZING INERT CARRIER GAS

Robert Arthur Ruehrwein, 181 Hudson Ave., Tenafly, N.J. 07670

Filed Apr. 12, 1976, Ser. No. 675,997

Int. Cl.² H01L *21/205, 21/18*

U.S. Cl. 148—175 **8 Claims**

1. A process for the production and deposition of epitaxial layers comprised of compounds selected from the group consisting of the nitrides, phosphides, arsenides and antimonides of aluminum, gallium, indium and mixtures thereof, onto a substrate material the crystal lattice spacing of which is within about 40% of that of said compounds and being selected from the class consisting of I-VII, II-VI and III-V compounds, germanium and silicon, which comprises

A. combining in the vapor phase, while excluding oxidizing gases, first and second separate gas streams, said first gas stream comprising an inert carrier gas selected from the class consisting of nitrogen, helium and argon, and a gaseous mixture formed by the reaction of hydrogen halide and a Group III element; and said second gas stream comprising an inert carrier gas selected from the class consisting of nitrogen, helium and argon, and a gaseous substance selected from the group consisting of a Group V element and a volatile Group V compound, said second gas stream being maintained at a temperature insufficient to cause reaction between said carrier gas and said Group V element or compound; and (B) contacting the resulting reaction mixture with said substrate at a temperature within the range of from 135° C. to 1500° C. to deposit a single crystal form of at least one III-V compound as an epitaxial layer on said substrate.

4,062,707

UTILIZING MULTIPLE POLYCRYSTALLINE SILICON MASKS FOR DIFFUSION AND PASSIVATION

Hidenobu Mochizuki, Atsugi; Teruaki Aoki, Tokyo; Takeshi Matsushita, Sagamihara; Hisao Hayashi, and Masanori Okayama, both of Atsugi, all of Japan, assignors to Sony Corporation, Tokyo, Japan

Filed Feb. 2, 1976, Ser. No. 654,598

Claims priority, application Japan, Feb. 15, 1975, 50-19353

Int. Cl.² H01L *21/22, 21/31*

U.S. Cl. 148—187 **3 Claims**

1. A method for fabricating a semiconductor device comprising the steps of;

forming a first polycrystalline silicon passivation layer containing between 2 and 45 atomic percent of oxygen atoms on a semiconductor layer;

forming a second polycrystalline silicon passivation layer containing more than 10 atomic percent of nitrogen atoms on said first polycrystalline silicon layer;

removing a part of said first and second polycrystalline silicon passivation layers selectively, for making an opening in them; and

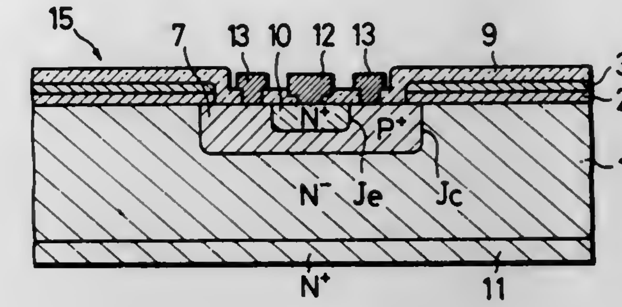

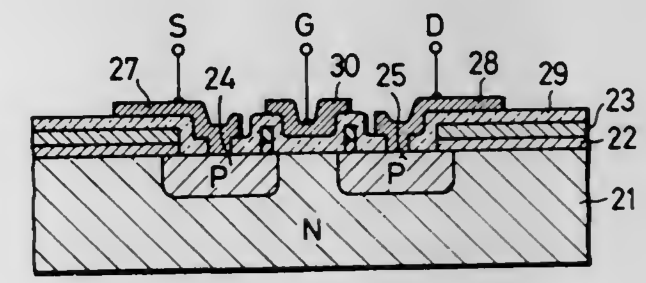

diffusing impurity material of one conductivity type into said semiconductor layer through said opening in order to form a diffused region.

4,062,708

AZIDE GAS GENERATING COMPOSITION

George W. Goetz, Detroit, Mich., assignor to Eaton Corporation, Cleveland, Ohio

Continuation of Ser. No. 528,199, Nov. 29, 1974. This application Aug. 13, 1976, Ser. No. 714,430

Int. Cl.² C06B *35/00*

U.S. Cl. 149—35 **15 Claims**

1. A solid, ignitable, nitrogen gas generating composition consisting essentially of a major portion by weight of an alkali metal azide and enough finely divided reactant oxide selected from the oxides of iron, cobalt and nickel, to form upon ignition, a solid, porous, coherent combustion residue, without the formation of a deleterious guantity of a molten product of combustion, said reactant oxide being present as a subsieve powder having a primary particle size in the range from about 0.1 micron to about 10 microns.

4,062,709

INHIBITED FLUOROCARBON ROCKET PROPELLANT

Victor F. Castaneda, 218 Iowa St., and Homer L. Davis, P.O. Box 503, both of Ridgecrest, Calif. 93555

Filed Sept. 25, 1968, Ser. No. 762,662

Int. Cl.² C06B *45/10*

U.S. Cl. 149—19.3 **3 Claims**

3. The fluorocarbon bound propellant grain having its outer surface covered with a layer of restrictive burning material consisting essentially of a mixture of about 80 parts by weight modified diglycidyl ether of para, para'-isopropylidenediphenol type liquid epoxy resin and about 20 parts by weight of a polymeric amido-amine hardner; said grain comprising about 15% by weight polytetrafluoroethylene, about 15% by weight of the copolymer of vinylidene fluoride and perfluoropropylene, about 49.5% by weight ammonium perchlorate, about 19.5% by weight aluminum and about 1% by weight sodium fluoride.

4,062,710
METHOD OF COVERING A PIPE, ESPECIALLY A STEEL PIPE, AND OTHER METALLIC ARTICLES WITH THERMOPLASTIC SYNTHETIC MATERIAL
Fritz Muckenheim, Hohenlimburg, Germany, assignor to Hoesch Werke Aktiengesellschaft, Dortmund, Germany
Filed May 11, 1976, Ser. No. 685,132
Claims priority, application Germany, May 13, 1975, 2521198
Int. Cl.² B65H *81/00*
U.S. Cl. 156—187 **3 Claims**

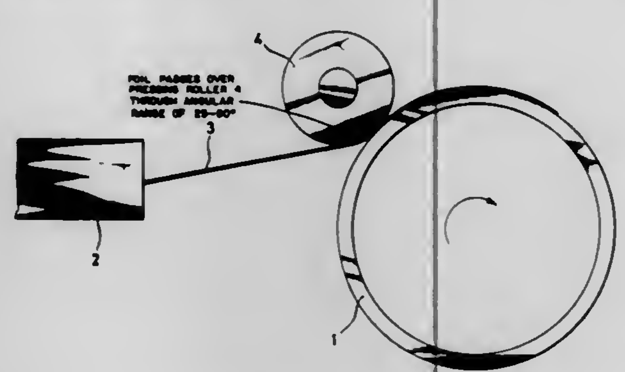

1. A method of covering metallic articles and pipes, especially steel pipes, with thermoplastic synthetic material, which includes in combination the steps of: first heating the pipe having an outer peripheral surface to be covered to a temperature of from 170° to 190° C while simultaneously rotating said pipe at a circumferential speed of from 10 to 100 meters per minute, feeding said thermoplastic synthetic material in the form of a foil onto the heated outer peripheral surface of said rotating pipe while winding said foil helically around said pipe and with a roller pressing said roll against said heated outer peripheral surface, said foil immediately prior to its contact with said pipe also being arched over the roller in an angle range of only from 25° to 50° on the roller avoiding air occlusion.

4,062,711
METHOD FOR FORMING FIBERGLASS-RESIN LAMINATE WITH PERMANENT INDICIA PATTERN
R. Elbert Davis, 1401 Valley View Road, No. 425, Glendale, Calif. 91202
Filed Dec. 3, 1975, Ser. No. 637,259
Int. Cl.² B29C *19/00*
U.S. Cl. 156—244 **2 Claims**

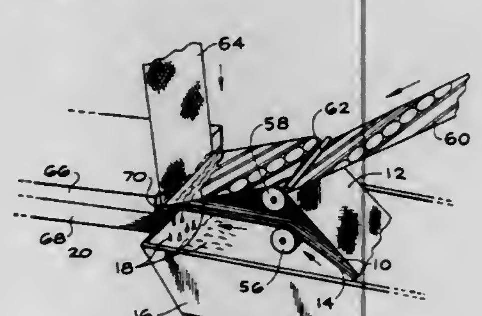

1. A continuous process for the formation of a fiberglass-resin laminated structure with a permanent pattern of indicia thereon, comprising:
passing fiberglass in a multi-layer, continuous, elongate form through a reservoir of resin therefor to thereby obtain combination of said resin with said fiberglass;
disposing a sheet of cloth having a continuous, elongate form, and having said pattern of indicia printed on its top surface, in alignment with and adjacent the outermost layer of said fiberglass; and
drawing said resin and fiberglass combination and said aligned sheet of cloth together through a die having internal opposing surfaces spaced sufficiently close one to the other to substantially compress together said sheet of cloth, fiberglass and resin, and heating in said die sufficiently to at least partially rigidify said resin whereby, upon cooling, a self-supporting, unitary, elongate laminated structure is obtained having a permanent pattern of said indicia visible thereon submerged below the plane of an external surface of said laminate.

4,062,712
METHOD FOR MAKING A PACKING LAMINATE
Olof Sven Sören Stark, Rydsgard, Sweden, assignor to AB Ziristor, Lund, Sweden
Filed Oct. 5, 1976, Ser. No. 729,675
Claims priority, application Sweden, Oct. 24, 1975, 7511919
Int. Cl.² B29D *27/00;* **B29F** *3/00*
U.S. Cl. 156—244 **3 Claims**

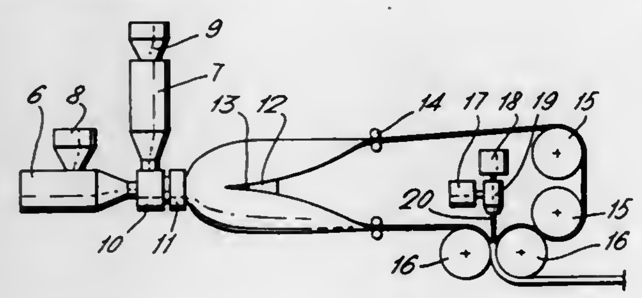

1. A method for manufacturing a laminate having a first central layer of an extensible, high density, homogeneous thermoplastic material, second layers of foamed plastic material on opposed sides of the first layer and opposed third layers of high impact, homogeneous, thermoplastic material disposed on the outer sides of the second layers, said method comprising extruding a tube composed of a layer of a foamed plastic material, and a layer of a high impact, homogeneous thermoplastic material on the outside thereof, cutting said tube longitudinally thereof at substantially opposite locations, flattening each portion of the cut tube to form a pair of opposed flat webs, the foamed plastic material of one web facing the foamed plastic material on the other web, passing said webs between a pair of pressing rolls, extruding into the nip between the two webs as they pass between the pressing rolls, a layer of an extensible, high density, homogeneous, thermoplastic material whereby the layer of extensible, high density, homogeneous thermoplastic material is adhered to the foamed plastic layers of the webs to form the laminate.

4,062,713
PHOTODOSIMETER FILM BADGE
Robert J. Anderson, Villa Park, Calif., assignor to Beckman Instruments, Inc., Fullerton, Calif.
Division of Ser. No. 491,875, July 25, 1974, Pat. No. 3,980,696. This application Mar. 25, 1976, Ser. No. 670,203
Int. Cl.² B32B *31/00*
U.S. Cl. 156—256 **7 Claims**

1. The method of making a film which is sensitive to non-ionizing radiation comprising the steps of:
a. dissolving bilirubin in an organic solvent capable of dissolving primarily the IX-alpha isomer of bilirubin while introducing substantially no oxygen to form a first solution;
b. dissolving a polymer in said organic solvent to form a second solution;
c. adding trace chemicals capable of absorbing oxygen to both said first and said seconds;
d. combining said first and second solutions;
e. forming said combined solution into a thin film of uniform thickness; and,
f. drying said thin film slowly in an oxygen-excluded atmosphere to evaporate said organic solvent to form a thin film of the IX-alpha isomer of bilirubin bound in a polymeric film base.

4,062,714
PROCESS FOR MAKING HOLLOW SILICON BODIES AND BODIES UTILIZING BOARD-SHAPED MEMBERS TO FORM THE BASIC GEOMETRIC SHAPE SO MADE
Rudolf Griesshammer, Burghausen; Franz Köppl, Altotting; Alois Göppinger; Helmut Hamster, both of Burghausen, all of Germany, and Josef Thalmeier, Braunau, Austria, assignors to Wacker-Chemitronic Gesellschaft fur Elektronik Grundstoffe mbH, Burghausen, Germany
Filed July 13, 1976, Ser. No. 704,889
Claims priority, application Germany, Sept. 16, 1975, 2541215
Int. Cl.² H01L *21/20;* **B29D** *23/00*
U.S. Cl. 156—304 **1 Claim**

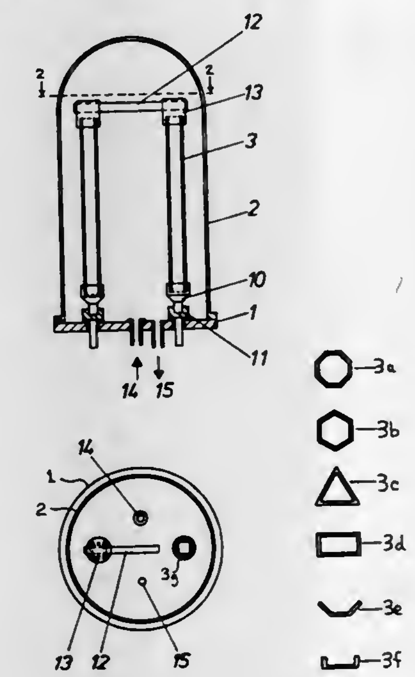

1. A process for making hollow silicon bodies by decomposition from a gaseous compound containing silicon and depositing said silicon on heated carrier bodies, which comprises arranging in a decomposition reactor a plurality of board-shaped members of silicon in a geometrical pattern with the edges of adjacent members abutting one another to form a hollow carrier body, heating said body to the decomposition temperature of the gaseous compound by the passage of direct electric current therethrough, introducing the gas into the device whereby it is thermally decomposed, causing the silicon released thereby to become inseparately united with the hollow carrier body, the hollow silicon body so formed being immediately available for use in the semi-conductor industries.

4,062,715
ADHESIVE COMPOSITION AND METHOD FOR BONDING POLYOLEFIN SURFACES WITH METAL SURFACES
Erich Manner; Klaus Adler; Engelbert Pichler; Johann Bauer, all of Burghausen, and Hans Sommer, Munich, all of Germany, assignors to Wacker-Chemie GmbH, Munich, Germany
Continuation-in-part of Ser. No. 386,515, Aug. 8, 1973, abandoned. This application Apr. 21, 1976, Ser. No. 678,957
Claims priority, application Germany, Aug. 8, 1972, 2239067
Int. Cl.² C09J *5/00*
U.S. Cl. 156—334 **9 Claims**

1. A method for bonding a metal surface to a polyolefin surface which comprises applying a layer of an adhesion assistant or binder composition consisting of an aqueous dispersion of an ethylene/vinyl acetate copolymer containing from 40 to 85 parts by weight of vinyl acetate and having a Mooney viscosity ML-4 of 8 to 40, from 0.5 to 5 parts by weight, based on 100 parts by weight of the copolymer, of a peroxide compound capable of crosslinking polymers, and from 1 to 10 parts by weight, based on 100 parts by weight of the copolymer, of a low-molecular-weight 1,2-polybutadiene having a molecular weight of from 500 to 10,000, to at least one of a polyolefin surface and a metal surface, allowing the aqueous dispersion to dry, placing said metal surface and said polyolefin surface in contact under pressure and an elevated temperature, and recovering a composite body of a metal surface bonded to a polyolefin surface.

4,062,716
APPARATUS FOR PROGRAMMING THE DEPOSITION OF MATERIAL ON A TIRE SURFACE
Raymond M. Galantine, Newport Beach, and Bruce G. Brown, Corona, both of Calif., assignors to AMF Incorporated, White Plains, N.Y.
Continuation-in-part of Ser. No. 598,109, July 22, 1975, abandoned, which is a continuation-in-part of Ser. No. 454,651, March 25, 1974, abandoned. This application Jan. 27, 1977, Ser. No. 763,190
Int. Cl.² B29H *17/36*
U.S. Cl. 156—361 **8 Claims**

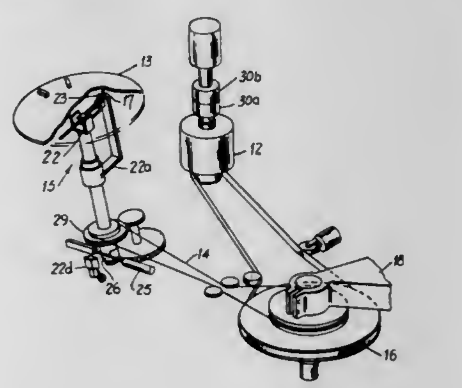

1. A programming assembly for use with a tire retread apparatus adapted to control the wraps of advancing rubber ribbon material as it is applied upon a tire surface supported on tire support means provided with spindle means for receiving a tire thereon, drive means for driving said spindle means through a linkage means connected between said drive means and said spindle means, said linkage means being directed by said program assembly for operation during each of two separate modes of operation, each of said modes of operation employing individual templates, wherein: said linkage means being moveable in a program mode in response to program information set forth on a transportable, programable template by means of a series of targets positioned in respective arcuate paths formed on said first template, the distance between each of said targets corresponding to a portion of said tire surface to be wrapped with rubber ribbon, to thusly define a ribbon wrap formation across the entire tire tread surface; a first sensing means mounted on movable support means within said tire retread apparatus, being adapted to travel in an arcuate path in concert with said linkage means, and being actuable by each of said targets for causing corresponding arcuate movement of said tire surface; a second sensing means mounted in proximity to said first sensing means on said support means being engageable therewith through actuation of switch means after the last of said targets in said programable template has been sensed; said first and second sensing means being jointly movable in response to a plurality of contacts disposed in a predefined arcuate path about a transportable production template disposed in said programming assembly to thereby enable said programming assembly to function in said second mode,once information from said first template has been transferred to said second template to thusly control the arcuate movement of said tire surface in an incrementable fashion through said linkage means in response to said transferred information from said production template, and means for de-energizing said spindle after all of said contacts on said second template have been sensed.

4,062,717

METHOD AND APPARATUS FOR WINDING A FIBER REINFORCED BELL ON THE END OF A PIPE

William George McClean, Milwaukee, Wis., assignor to McClean Anderson, Inc., Milwaukee, Wis.

Filed Oct. 2, 1975, Ser. No. 618,968

Int. Cl.² B65H *81/00*

U.S. Cl. 156—425 15 Claims

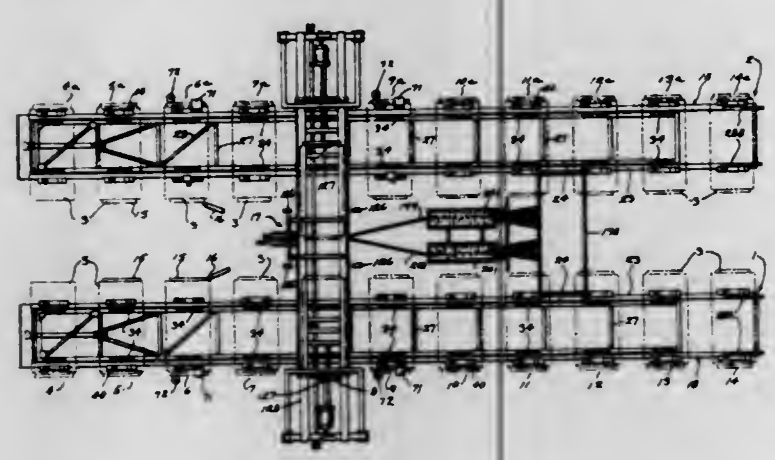

1. An apparatus for winding a fiber reinforced resin section on the end of a mandrel, comprising first conveyor means to convey a first mandrel, first delivery means for moving the first mandrel from the first conveyor means to a first winding position and for withdrawing said first mandrel from the first winding position, second conveyor means to convey a second mandrel, second delivery means for moving the second mandrel from the second conveyor means to a second winding position and for withdrawing said second mandrel from said second winding position, said mandrels being in end-to-end promimate abutting relation when in the respective winding positions, rotating means for independently rotating each mandrel at the winding position about its axis, a reciprocating winding carriage feeding a strand impregnated with resin, first means for causing reciprocating movement of said carriage in a first reciprocating path to form a first wound section of said resin impregnated strand on said first mandrel, transfer means for shifting said strand to the second mandrel located at its winding position, second means for causing reciprocating movement of said carriage in a second reciprocating path separate from the first path to form a second wound section of said resin impregnated strand on said second mandrel, and cutting means for cutting the strand at the joint between the abutting mandrels after operation of said transfer means and during winding of said second wound section.

4,062,718

HEAT SEALING MEANS

Robert A. Hay, II, Midland, Mich., assignor to The Dow Chemical Company, Midland, Mich.

Filed Sept. 2, 1976, Ser. No. 720,018

Int. Cl.² B30B *15/34;* B65B *7/28, 51/32*

U.S. Cl. 156—498 8 Claims

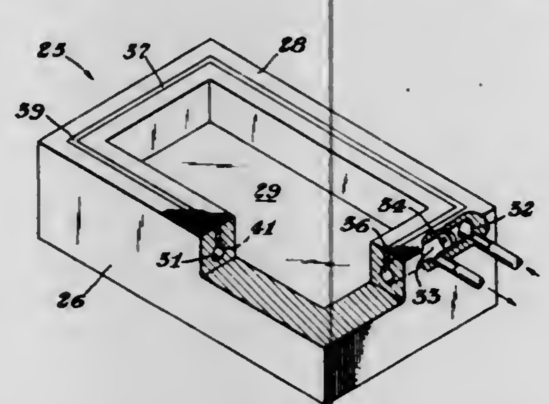

1. A heat-sealing element, the heat-sealing element comprising a body having a heat-sealing face adapted to be disposed adjacent a film or sheet to be sealed, the body having a thermal conductivity of less than about 30, the body defining a heat-exchange fluid passageway, the heat-exchange fluid passageway having an inlet and an outlet to permit flow of heat-exchange fluid through the passageway, an elongate slot communicating with the heat-exchange fluid passageway and the sealing face of the body, the slot being located in a region wherein it is intended that the sealing face should cause a seal on a workpiece, a heat-sealing member of a metal having a thermal conductivity of at least 175, the heat-sealing member being in liquid-tight sealing engagement with the body, the heat-sealing member being in said slot, the heat-sealing member having a sealing face generally commensurate with the adjacent portion of the sealing face of the body, the heat-sealing member having a fluid-contacting face generally parallel to and remote from the sealing face and in communication with the heat-exchange passage.

4,062,719

APPARATUS FOR STORING INFORMATION MATERIAL IN CASSETTES

Sho Masuzima; Shuhei Yoshida; Toshiyuki Yaguchi, and Tetsuya Fuchiguchi, all of Tokyo, Japan, assignors to Tokyo Denki Kagaku Kogyo Kabushiki Kaisha, Japan

Filed Apr. 2, 1976, Ser. No. 673,064

Claims priority, application Japan, Apr. 4, 1975, 50-40997

Int. Cl.² B65H *21/02*

U.S. Cl. 156—502 11 Claims

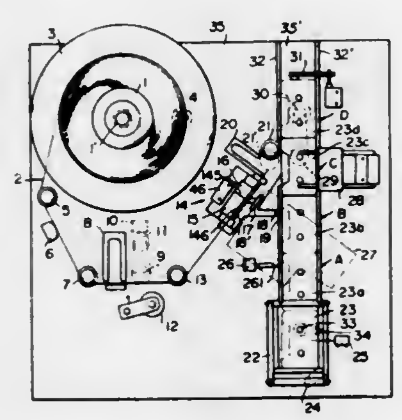

1. In an apparatus for manufacturing, from a cassette having a continuous leader extending between and connected to rotary cassette hubs and from a supply of elongated flexible information material which carries information capable of being extracted from said material, a cassette which has separate leaders respectively connected with said rotary hubs thereof and a length of the information material opposed ends of which are connected with said leaders, respectively, cassette-support means for supporting a cassette which initially has said continuous leader extending between and connected to said rotary hubs thereof, information material supply means for supplying information material lengths of which are respectively to be stored in cassettes, guide means having components situated along a predetermined path extending from said supply means to said support means for guiding the information material along said path from said supply means to said support means during travel of the information material into a cassette while being coiled around a hub thereof, holding means located at a splicing station which is situated along said path for temporarily holding a portion of said information material and a portion of said leader, said holding means having a leading splicing position where a leading end of a length of said information material is in alignment with an end of a separate leader connected with one of said cassette hubs and a trailing splicing position where a trailing end of said length of information material is in alignment with an end of a separate leader connected with the other hub of the cassette, cutting means situated adjacent said splicing station for cutting a continuous cassette leader loop held by said holding means into separate leaders respectively connected with said rotary hubs of said cassette, said holding means then changing from said trailing splicing position to said leading splicing position to situate the leading end of the information material in alignment with an end of one of said leaders which extends to one of said rotary hubs, splicing means situated in the region of said splicing station for splicing said leading end of said information material to said one leader, said holding means then releasing said length of information material at said leading end thereof and said one leader spliced thereto to be wound together with said length of information material into the cassette at said support means until the trailing end of the length of information material reaches said holding means, said holding means continuing to hold the other leader which extends to the other hub while said one leader together with the information material is wound into the cassette until the trailing end of said length of information material reaches said holding means, whereupon said holding means temporarily holds said trailing end of the length of information material, said cutting means then cutting the information material at said holding means to separate the trailing end of the length of information material already wound into the cassette from the leading end of the next length of information material, said holding means then returning to said trailing splicing position thereof for aligning the trailing end of the length of information material already wound into the cassette with said other leader which is still held by said holding means, while the leading end of the next length of information material remains held by said holding means, said splicing means then splicing said trailing end of the length of information material already wound into the cassette to said other leader whereupon said holding means releases said other leader and said trailing end of information material spliced thereto for completion of the winding of the information material and said other leader into the cassette, while the leading end of the next length of information material is held at said holding means in readiness to be connected with a leader of another cassette during a repetition of the above operating cycle, the improvement which comprises a transfer means movable along a second path extending between said cassette-support means and said splicing station for transferring a loop of the continuous leader from a cassette at said support means to said holding means to be temporarily held thereby while said holding means is in said trailing splicing position thereof and while said holding means holds a leading end of said information material which has travelled along said predetermined path up to said holding means, said transfer means including a loop-transfer pin and pin-moving means operatively connected thereto for moving said loop-transfer pin from a rest position first to a starting position adjacent said cassette-support means within a relatively short leader loop, then from said starting position along said second path to said splicing station for extending the loop of continuous leader from the cassette to the splicing station to be engaged and held by said holding means in preparation for being cut by said cutting means into separate leaders, then back to said starting position, and then back to said rest position, said cassette-support means supporting said cassette for movement along a third path, and cassette-moving means for moving said cassette along said third path after said pin has extended the loop into engagement with said holding means while the leader is held by said holding means, said cassette-moving means moving said cassette along a portion of said third path which forms one side of a triangle while said leader after transfer to said holding means by said transfer means extend from said holding means along a portion of said predetermined path which forms a second side of said triangle, whereby the movement of said cassette along said third path causes said leader to extend along said holding means at said portion of said predetermined path which forms said second side of said triangle, said transfer means including a holding pin connected with said pin-moving means to be moved thereby only from a rest position adjacent said transfer pin when the latter is in said rest position thereof into said relatively short loop to a starting position adjacent said transfer pin when the latter is in said starting position, with said holding pin returning with said transfer pin from the starting positions of both pins to the rest positions thereof, so that during movement of the cassette by said cassette-moving means along said one side of said triangle, a portion of the leader extends from said holding pin to said transfer pin after the latter has reached said holding means along the third side of the triangle.

4,062,720

PROCESS FOR FORMING A LEDGE-FREE ALUMINUM-COPPER-SILICON CONDUCTOR STRUCTURE

George Edward Alcorn, Silver Spring, Md.; James Downer Feeley, Marshall, and Julian Turner Lyman, Manassas, both of Va., assignors to International Business Machines Corporation, Armonk, N.Y.

Filed Aug. 23, 1976, Ser. No. 716,861

Int. Cl.² H01L *21/324*

U.S. Cl. 156—643 16 Claims

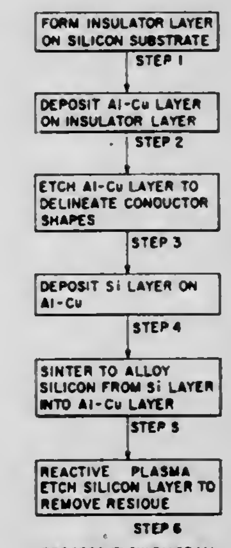

PROCESS FLOW DIAGRAM

1. A process for forming a ledge-free aluminum-silicon conductor structure, comprising:

depositing a blanket layer of aluminum over the surface of a semiconductor substrate;

etching the aluminum layer to delineate the desired conductor shape;

depositing a blanket layer of silicon over the surface of the substrate and on the delineated aluminum layer;

sintering the silicon layer and aluminum layer to alloy a portion of said silicon layer with said aluminum layer;

removing the unalloyed portion of said silicon layer by a dry, ion etching technique.

4,062,721

USE OF SURFACTANT TO INCREASE WATER REMOVAL FROM FIBROUS WEB

Vernon L. Guyer, Minneapolis, and David O. Bringen, Edina, both of Minn., assignors to Conwed Corporation, St. Paul, Minn.

Filed Oct. 26, 1976, Ser. No. 735,428

Int. Cl.² D21D *3/00*

U.S. Cl. 162—101 6 Claims

1. A method for removing water from a wet fibrous sheet comprising the steps of:

a. mixing an aqueous slurry comprising mineral wool, a binder;

b. depositing said aqueous slurry on a wire mesh to form a wet sheet;

c. adding a surfactant foaming agent to the slurry, said step of adding said surfactant foaming agent being performed at substantially the time that said slurry is deposited on said wire mesh, whereby essentially no internal foam is present in said wet sheet at the time of depositing;

d. draining water from said wet sheet through said wire mesh, said drainage being aided by the force of gravity; and

e. draining additional water from said wet sheet through said

wire mesh, said additional drainage being aided by an air pressure differential created across said wet sheet whereby foam is generated within said wet sheet due to the passage of air therethrough.

4,062,722
DEVICE FOR TREATING DEFORMABLE PARTICLES WITH THE COUNTERFLOWING LIQUIDS
Carlos Ibañez Ajuria, Velazquez, 73, Madrid, Spain
Continuation-in-part of Ser. No. 541,236, Jan. 15, 1975, abandoned. This application Sept. 7, 1976, Ser. No. 721,106
Claims priority, application Spain, Jan. 18, 1974, 422217
Int. Cl.² D21C *7/12, 9/10, 9/02*
U.S. Cl. 162—234 **5 Claims**

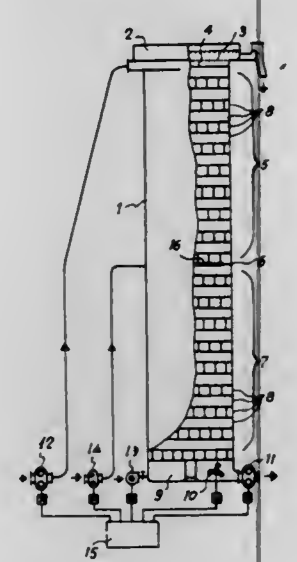

1. A device for the counterflow treatment in stages of fibrous deformable particles with liquid comprising:
a vertical tower formed by a cylindrical wall and having an upper chamber, a lower chamber, and a longer middle section between and contiguous with said chambers;
a filtering screen extending across the top of said tower, for the purpose of blocking the flow of said particles, while allowing the flow of said liquid out of said upper chamber;
a shallow vertical open portion atop said tower, for containing said liquid which flows through said screen, said open portion including a drain for limiting the maximum level of the liquid;
a particle inlet located in the upper chamber;
a particle introducing means, exterior to said tower, for causing the flow of said particles in a mass into said upper chamber through said particle inlet;
a body of grids extending through said middle section, made up of a series of contiguous horizontal grid layers having the same cross-sectional area as the interior of said tower, each of said horizontal grid layers being made up of parallel equidistant strips, the ends of which are contiguous with the inner surface of said tower, said strips being spaced to permit the movement of said mass through said body of grids, said grid layers being stacked one upon the other in such a way that said strips of each of said layers are perpendicular to the strips of each contiguous grid layer;
a material outlet in said lower chamber, being tangential to said wall of said tower;
a mass removing means, exterior to said tower, to cause said mass to flow out of said tower through said material outlet;
a liquid inlet in said lower chamber;
a liquid introducing means, exterior to said tower, to cause said liquid to flow into said tower through said liquid inlet, at least one propeller in said lower compartment for stirring said mass; and
an automatic control means, exterior to said tower, for automatically controlling said liquid introducing means, said mass removing means, and said particle introducing means, for operation in a predetermined sequence, said sequence consisting of a downward mass movement caused by the action of said mass removing means and said particle introducing means, followed by an upward liquid movement caused by the action of said liquid introducing means, said body of grids functioning to distribute and oppose the thrust exerted on said particles by said liquid during its upward movement, thereby reducing the compression of the particles against said screen and said grids and allowing an increase in the relative velocity between said particles and said liquid.

4,062,723
CORE ACCESS SYSTEM FOR NUCLEAR REACTOR
Christo Andrea, Windsor Locks, Conn., assignor to Combustion Engineering, Inc., Windsor, Conn.
Filed Sept. 29, 1975, Ser. No. 617,343
Int. Cl.² G21C *19/20, 19/00;* **B66C** *17/08*
U.S. Cl. 176—30 **7 Claims**

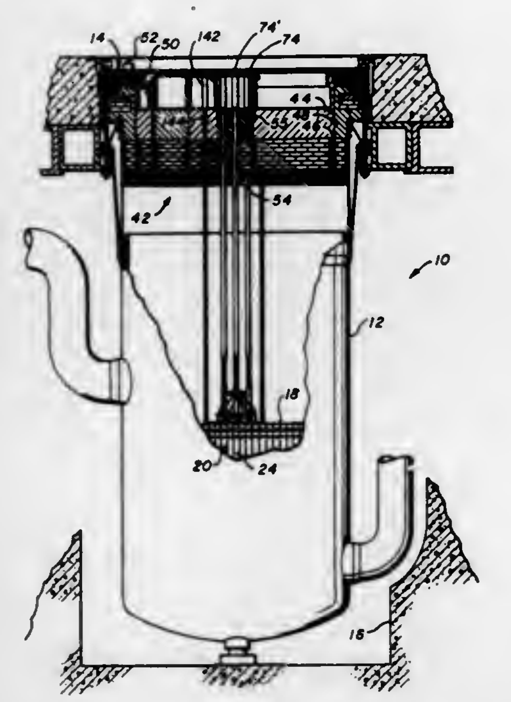

1. An improved nuclear reactor arrangement of the type having a reactor vessel housing a nuclear core comprised of a plurality of elongated hexagonally shaped assemblies nested in a close fitting array, some of the said assemblies being fuel assemblies and others of said assemblies being control assemblies, said vessel having an opening in the top thereof; a reactor vessel head for said opening in the top of said vessel, said vessel head comprising a large rotatable cover having a lateral dimension at least as great as the lateral dimension of said core and having a plurality of circular openings through said cover positioned about the surface thereof; a plurality of small plugs for said openings in said large rotatable cover, said plugs effectively sealing off the interior of said vessel through said openings; a plurality of upwardly extending nozzles mounted on the upper surface of said large rotatable cover and said small plugs, some of said nozzles being in close proximity to the boundary of said openings in said large rotatable cover, the interior of each of said nozzles communicating with the interior of said reactor vessel through said vessel head for supporting and providing access through the head for servicing apparatus; upwardly extending skirts mounted on said large rotatable cover about the periphery of said circular openings therein, said upwardly extending skirts effectively passing between adjacent nozzles on said large rotatable cover and on said small plugs so as not to interfere with the penetrations therethrough, some of said nozzles on said large rotatable cover and said plugs being in close proximity to said skirts; drive mechanisms mounted on the top of some of said nozzles on said vessel head and having means associated therewith to be operatively connected to said core servicing apparatus within said nozzle for effectively controlling and operating said core servicing apparatus within said core, the elevation of said drive mechanisms mounted on some of said nozzles extending substantially above the elevation of said skirts about the boundary of said openings in said vessel head; the improvement comprising a skirt extension and a refueling plug for each of said openings in said rotatable cover for providing access to said core over each of said assemblies therein, said skirt extension being mountable in sealing relationship to said upwardly extending skirt when said nozzle supporting plug is removed from said opening in said large rotatable cover, said skirt extension extending upwardly above the upper elevation of said nozzles on said large rotatable cover from which said drive mechanisms have been removed, said skirt extension having a laterally extending lip extending laterally outward therefrom, a portion of which overlies and is above the said nozzles in close proximity to said upwardly extending skirt on said reactor vessel head, and said skirt extension including bearing means mounted on said lateral extending lip thereof for rotatably supporting said refueling plug in said opening in said large rotatable cover; and said refueling plug including an opening therethrough through which said assemblies may pass, said opening in said refueling plugs providing direct access in line over each of said assemblies of said core upon rotation of said refueling plug and said large rotatable cover.

4,062,724
NUCLEAR CORE DEBRIS COLLECTING TRAY
Donald Broadley, Warrington, England, assignor to United Kingdom Atomic Energy Authority, London, England
Filed Mar. 31, 1975, Ser. No. 563,525
Claims priority, application United Kingdom, Apr. 5, 1974, 15122/74
Int. Cl.² G21C *9/00*
U.S. Cl. 176—38 **2 Claims**

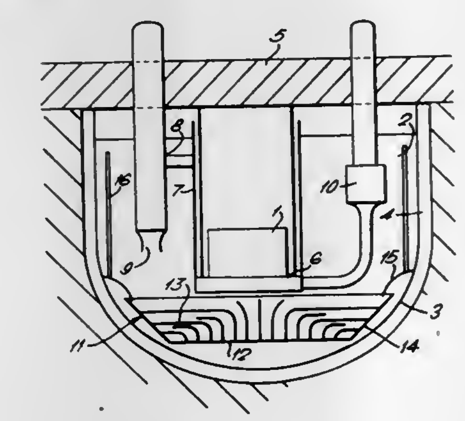

1. A nuclear reactor construction comprising a vessel containing a pool of liquid coolant, a reactor core submerged in the pool of coolant, a collecting tray for core debris submerged in the pool of coolant below the core and spaced from the floor of the vessel,
an internal skirt attached to the wall of the vessel and overlapping the periphery of the tray to direct core debris into the tray,
the collecting tray comprising a complex of cooling tubes extending between a base plate of the tray and a peripheral wall of the tray, the base plate forming a plane tube sheet in which one open end of each cooling tube is received and the peripheral wall forming an annular tube sheet in which the other open end of each cooling tube is received, the tube connections with the plane tube sheet being arranged on concentric pitch circles and the tube connections with the annular tube sheet being arranged in layers thereby to effect a regular distribution of cooling tubes throughout the tray.

4,062,725
PART LENGTH CONTROL ROD
Frank Bevilacqua, Windsor, and Joseph Roger Humphries, Granby, both of Conn., assignors to Combustion Engineering, Inc., Windsor, Conn.
Filed Aug. 14, 1975, Ser. No. 604,528
Int. Cl.² G21C *7/10*
U.S. Cl. 176—86 R **17 Claims**

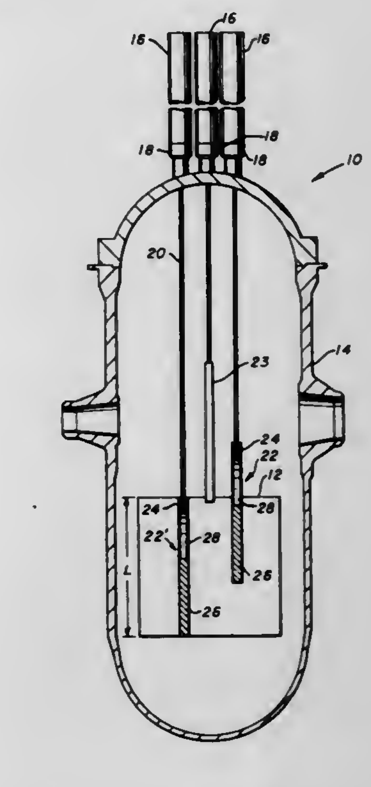

1. A moveable control rod having first and second ends for the control of power oscillations in a nuclear reactor having a core with an active length L, said control rod comprising:
a. a first portion of said control rod's first end comprising a first neutron poison with a length no longer than 20 percent of the length L;
b. a second portion at said control rod's second end comprising a second neutron poison, said second neutron poison having a smaller macroscopic absorption cross-section than said first neutron poison and having a high number density but having a low microscopic neutron absorption cross-section; and
c. a third portion between said first and second portions, said third portion comprising a material which is substantially non-neutron absorbing relative to said first and second portions, and the sum of the lengths of said first, second, and third portions being substantially equal to the length of the core's active length L.

4,062,726
NOZZLE SEAL
Gary Allen Walling, Shellsburg, Iowa, assignor to The Babcock & Wilcox Company, New York, N.Y.
Filed May 22, 1975, Ser. No. 579,983
Int. Cl.² G21C *15/22*
U.S. Cl. 176—87 **4 Claims**

1. A reactor system comprising a pressure vessel having at least one inlet and one outlet nozzle, a distribution hoop located within the vessel, the hoop having an opening facing the outlet nozzle, an impervious means interposed between the vessel and the hoop to define a fluid flow channel extending

from the opening to the outlet nozzle, said means including a seal ring abutting the vessel and a bellows interposed between

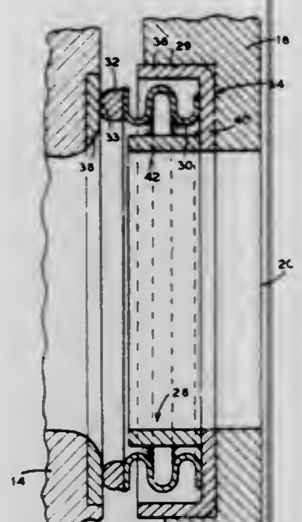

the ring and the hoop, said bellows urging the ring toward the vessel to maintain sealing contact therebetween.

4,062,727

PROCESS FOR MANUFACTURING HIGH DENSITY CELL CULTURES

Vadake R. Srinivasan, Baton Rouge, La.; Marvin B. Fleenor, St. Louis, Mo.; Richard J. Summers, and Margaret W. Bumm, both of Baton Rouge, La., assignors to Louisiana State University Foundation, Baton Rouge, La.

Filed Apr. 8, 1976, Ser. No. 674,855

Int. Cl.² C12B *1/00*

U.S. Cl. 195—28 R **6 Claims**

1. In a process for biosynthetically cultivating cells in an aqueous fermentation medium comprising a carbon source, nitrogen, phosphorus, trace mineral elements, and oxygen in amount sufficient to provide a predetermined oxygen level, to obtain a biomass of such cells for harvesting, the improvement which comprises

adding the carbon source, nitrogen, phosphorus, and each of the trace mineral elements to the fermentation medium, incrementally or continuously, and maintaining each throughout fermentation at essentially the minimum level required for assimilation by the cells to sustain growth, thereby maximizing the cellular growth rate; said minimum requirements for the carbon source, the nitrogen, the phosphorus and each of the trace mineral elements having been established in accordance with a predetermined cell growth rate curve,

said predetermined cell growth rate curve having been independently established for the carbon source, the nitrogen, the phorphorus, and each of the trace metal elements, at different biomass levels in a continuous culture medium as occurs from the beginning of fermentation to the end of the period of growth of the cells in the fermentation medium, by starving the growing cellular mass of a nutrient, the minimum concentration of which is to be established while all other of the required nutrients are provided in quantity adequate to sustain growth of the cellular mass and, when growth has ceased due to a lack of the particular nutrient of which the cells have been deprived, adding the nutrient in measured incremental concentrations until growth of the cells has resumed.

4,062,728

STARCH THINNING PROCESS

Paul H. Blanchard, Concord, Calif., assignor to Amstar Corporation, New York, N.Y.

Filed July 11, 1975, Ser. No. 595,010

Int. Cl.² C12D *13/02*

U.S. Cl. 195—31 R **15 Claims**

1. A multi-stage process for the enzymatic thinning of starch employing the enzyme α-amylase which comprises forming an aqueous starch suspension, subjecting said aqueous starch suspension to a first stage thinning operation in the presence of added α-amylase, said first stage thinning operation being carried out at an initial temperature in the range 100°-110° C. for at least 3 minutes, and further heating the suspension at a final higher temperature of at least about 140° C. for at least about 3 minutes, said first stage thinning operation being carried out at a pressure sufficient to maintain the aqueous starch

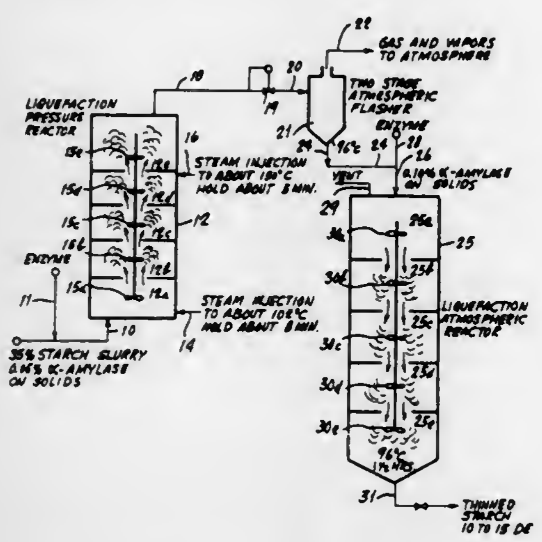

suspension being thinned in the liquid phase, thereupon subjecting the resulting enzymatically thinned starch suspension to atmospheric flashing to reduce the pressure of said resulting enzymatically thinned starch suspension to atmospheric pressure and to effect cooling thereof and subjecting the resulting treated starch suspension to a second stage thinning operation carried out at atmospheric pressure and at a temperature in the range 90°-100° C. in the presence of additional added α-amylase for at least 30 minutes to produce an aqueous thinned starch product.

4,062,729

MICROBIAL TRANSFORMATION OF STEROIDS

Candice B. Biggs, Kalamazoo; Thomas R. Pyke, Portage, and Merle G. Wovcha, Kalamazoo, all of Mich., assignors to The Upjohn Company, Kalamazoo, Mich.

Filed Nov. 26, 1976, Ser. No. 745,113

Int. Cl.² C07B *29/02*

U.S. Cl. 195—51 S **17 Claims**

1. A process for preparing a compound of the formula

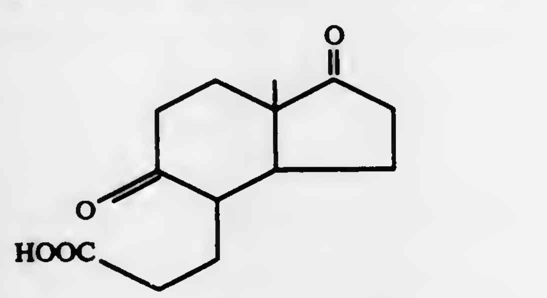

I

which comprises cultivating Mycobacterium fortuitum NRRL B-8129 in an aqueous nutrient medium at a pH of about 7 to about 9 under aerobic conditions in the presence of a steroid with or without a 17-alkyl side chain containing from 2 to 10 carbon atoms, inclusive and recovering said compound from the cultivated medium.

4,062,730

PROCEDURE FOR PRODUCING ENZYMES

Yrjö Mälkki; Leo Rouhiainen; Raimo Mattsson, all of Helsinki, and Pertti Markkanen, Vantaa, all of Finland, assignors to Leo Rouhiainen, Helsinki, Finland

Filed May 4, 1976, Ser. No. 683,231

Claims priority, application Finland, May 8, 1975, 751369

Int. Cl.² C12D *13/10*

U.S. Cl. 195—62 **8 Claims**

1. Procedure for producing enzymes which hydrolytically decompose proteins and peptides into amino acids, which comprises producing the enzymes in a bacterial culture consisting essentially of a bacterial strain selected from the group consisting of the bacterial strain Pseudomonas fluorescens Mc 864/VTTE 8.7 and the bacterial strain Pseudomonas fluorescens Mc 865/VTTE 1.9.

8. Enzymes produced by the method of claim 1 having exopeptidase activity at pH values between 5.25 and 10.0, with pH optima values at 5.25, 6.3, 6.8, 8.0, 9.0 and 10.0, and endopeptidase activity at pH values between 6 and 11 with pH optima values at 7.8 and 10.5, and that the exopeptidase activities are inhibited by ethylenediamine tetraacetic acid and by p-chloromercuribenzoate and are not inhibited by phenylmethylsulphonyl fluoride.

4,062,731

PRODUCTION OF URICASE FROM MICROCOCCUS LUTEUS

Roy Eugene Snoke, Rochester, N.Y.; Hugh Arthur Risley, Newport Richey, Fla., and Charles Thomas Goodhue, Rochester, N.Y., assignors to Eastman Kodak Company, Rochester, N.Y.

Filed July 21, 1976, Ser. No. 707,459

Int. Cl.² C12D *13/10*

U.S. Cl. 195—62 **8 Claims**

3. A uricase preparation comprising an uricase having the following properties:

a molecular weight of about 97,000 daltons;

maximum activity at a pH of 8.6, in a potassium phosphate buffer;

a Michaelis constant of 3.7×10^{-5};

an inhibition by Fe^{+3}, Cn^{+2}, Co^{+2}, or Mn^{+2};

a biphasic inhibitory response rate curve to Co^{+2} or Mn^{+2}; and

activation by PO_4^{-3} or SO_4^{-2}.

4,062,732

PROCESS OF PRODUCING ACID STABLE PROTEASE

Rudolf Lehmann, Neuss; Hans F. Pfeiffer, Haan; Joachim Schindler, Dusseldorf-Benrath, and Wolfgang Schreiber, Langenfeld, all of Germany, assignors to Henkel Kommanditgesellschaft auf Aktien, Dusseldorf-Holthausen, Germany

Filed June 14, 1976, Ser. No. 695,453

Claims priority, application Germany, June 26, 1975, 2528490

Int. Cl.² C12D *13/10*

U.S. Cl. 195—66 R **1 Claim**

1. A process for the production of an acid stable protease whose pH range of 50% of maximum activity against casein is between a pH of 2.5 and a pH of 6.5, consisting essentially of culturing a fungus strain of the species Rhizopus rhizopodiformis CBS 227.75 under aerobic conditions in a nutrient medium containing assimilable carbon and nitrogen sources, at a pH of between 3 and 7 and at a temperature of between 25° C and 50° C, separating the mycelium, and recovering said protease.

4,062,733

RADIO-ASSAY OF OESTROGEN

John Christopher Edwards, and Paul Hemesley, both of Amersham, England, assignors to The Radiochemical Centre Limited, England

Filed Dec. 22, 1975, Ser. No. 643,023

Claims priority, application United Kingdom, Jan. 9, 1975, 1012/75

Int. Cl.² G01N *31/14, 33/16*

U.S. Cl. 195—103.7 **9 Claims**

1. A method for the radio-assay of an oestrogen in a biological fluid which method comprises

a. causing said oestrogen to compete with a radio-iodine derivative, selected from the group consisting of the 2-iodo-, 4-iodo- and 2,4-di-iodo- derivatives of said oestrogen for reaction with a specific antibody to the oestrogen,

b. separating the oestrogen and iodo-oestrogen bound to the specific antibody from the unbound oestrogen and iodo-oestrogen and

c. measuring the radioactive concentration of one or both of the bound and unbound fractions of oestrogen.

4,062,734

APPARATUS FOR DESALINATING SEA WATER

Giorgio Pagani, Milan, Italy, assignor to Snamprogetti S.p.A., Milan, Italy

Filed June 4, 1976, Ser. No. 692,774

Claims priority, application Italy, June 6, 1975, 24079/75

Int. Cl.² B01D *3/28*

U.S. Cl. 202—236 **4 Claims**

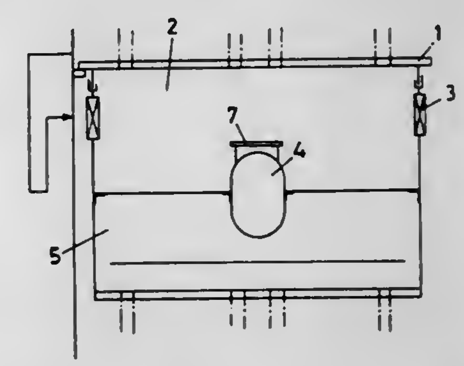

1. In an apparatus for desalinating sea water characterized in that it is composed by a vertically positioned column subdivided into a plurality of cylindrical sections, each of which comprises the following components:

a. a film-evaporator in a tube bundle vertical arrangement having a circular cross-sectional outline, without an outer casing;

b. a tub which is connected at the bottom portion with the top tube plate of the evaporator of the same cylindrical section, the tub in the last section being deprived of the evaporator and being connected to the brine discharge tube, and connected at the top with the bottom tube plate of the evaporator of the overlying section, said tub being connected, in the first cylindrical section to the sea water feeding tube;

c. a lamination system arranged at the bottom of the tub that is adapted to allow brine to flow from the tub to the underlying tube plate by dissipating the positive pressure differential that is obtained between the tub and the tube plate;

d. openings formed through the upper sidewall of the tub, except that of the cylindrical section;

e. one or more siphoning tubes for taking the condensate collected at the bottom of each cylindrical section to recycle the condensate at intermediate points of the subsequent cylindrical section; the improvement which comprises;

f. a preheater housed in a through-tube, the tube being passed through the tub and welded thereto.

4,062,735
METHOD OF RECOVERING FRESH WATER FROM SALINE WATER
Adolph Kopp, Jr., P.O. Box 137, Swan Lake, Mont. 59911
Filed Aug. 31, 1973, Ser. No. 393,437
Int. Cl.² B01D *3/06, 5/00*
U.S. Cl. 203—10 **4 Claims**

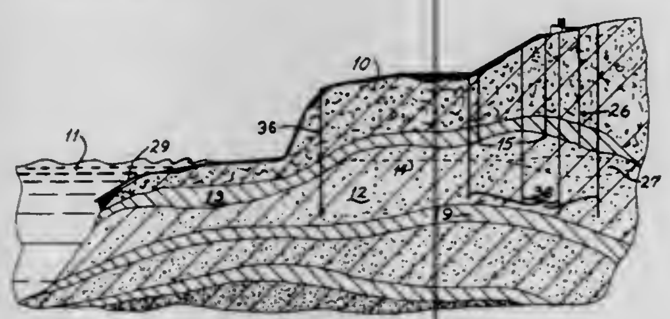

1. A method comprising:
extending a conduit downward from a ground surface location to an elevation above the surface area of a body of saline water having an upper portion entrapped from horizontal escape and lying within and partially filling a very permeable portion of an underground geological structure having a vapor-impervious cover layer, wherein the body of saline water has offshore communication with a body of seawater and is sufficiently large so that its surface area and the effective rate of evaporation are virtually unaffected by any local channels therein having an increased concentration of salt in solution being carried to seawater dispersal, the conduit being extended to an elevation located beneath the impervious layer and above the surface area of the underground body of saline water;
continuously removing water vapor from beneath the vapor-impervious layer by pumping the water vapor upwardly through the extended conduit to the ground surface location at a rate enabling the resulting dense brine in the underground body of saline water to be simultaneously replaced by the less saline, less dense, warmer seawater due to the access of the underground body of saline water so as to be available in the natural underground geological structure beneath the vapor-impervious cover layer for such continuous removal;
condensing the removal water vapor at the ground surface location;
the continuous removal of water vapor being accompanied by continuous replenishment of the underground body of saline water with the seawater having access to the underground geological structure to assure dilution of the underground body of saline water and to maintain a balanced condition of salinity between it and the body of seawater;
injecting into the underground body of saline water a refrigerant fluid capable of entrapping water vapor as the refrigerant fluid vaporizes and rises through the underground body of saline water, whereby the water is agitated and water vapor is entrapped in the bubbles of refrigerant to increase the resulting rate of water vaporization within the underground geological structure.

4,062,736
GOLD AND GOLD ALLOY DEPOSITION
Andre R. Meyer; Salvatore Losi; Erwin Marka, all of Geneva; Jacques Rudio, Vesenex, and Franco Zuntini, Geneva, all of Switzerland, assignors to Oxy Metal Industries Corporation, Warren, Mich.
Filed Nov. 13, 1975, Ser. No. 631,780
Claims priority, application Switzerland, Nov. 15, 1974, 15236/74
Int. Cl.² C25D *3/48, 3/62*
U.S. Cl. 204—43 G **4 Claims**
1. An aldehyde-free aqueous bath having a pH of from about 5 to 10 for the electrodeposition of gold and its alloys containing gold as the aurocyanide complex, a mild reducing agent selected from the groups consisting of hydrazine, hydroxylamine, piperazine, guanidine, and the organic substituted derivatives thereof, a complexing agent selected from the group consisting of N-methylcarboxylated and N-methylphosphonylated amines, from 1 to 20 mg/l arsenic as a water-soluble arsenic compound, and from 1 to 100 mg/l of a substituted polyamine of formula

$$R_2N(R—NR)_m—R'—NR_2$$

at least one R group is an aliphatic or aromatic radical having 1 to 6 carbon atoms or hydroxy derivative thereof, and the remaining R groups, if any, are hydrogen; R′ is an alkylene radical of 1 to 5 carbon atoms or a hydroxy derivative thereof and m is equal to 0, 1 or 2, the polyamine being present in an amount such that the weight ratio of polyamine/AS is between 1 and 5/1.

4,062,737
ELECTRODEPOSITION OF CHROMIUM
Donald John Barclay, Olivers Battery Hants, and William Morris Morgan, Chandlers Ford Hants, both of England, assignors to International Business Machines Corporation, Armonk, N.Y.
Filed Dec. 3, 1975, Ser. No. 637,483
Claims priority, application United Kingdom, Dec. 11, 1974, 53642/74
Int. Cl.² C25D *3/06, 3/56*
U.S. Cl. 204—43 R **24 Claims**
1. A composition of matter for use in the electrodeposition of chromium containing deposits consisting essentially of an aqueous solution of aquo chromium (III) thiocyanato complex as a source of trivalent chromium, the concentration of the Cr (III) being in the range of 0.03 to 0.5 M.
4. The composition of matter of claim 1 for plating cobalt-chromium containing alloys in which cobalt cations are present in said aqueous plating solution.
5. The composition of matter of claim 1 for plating nickel-chromium containing alloys in which nickel cations are present in said aqueous plating solution.
19. The method of preparing a plating solution for electroplating of chromium comprising the step of reacting a thiocyanate anion with chromium perchlorate in the presence of boric acid in an aqueous solution having a pH of 1 to 2 to form an aquo chromium III thiocyanato complex of the formula $(H_2O)_{6-n}\,Cr(SCN)_n^{(+3-n)}$, which n is a whole number from one through six.

4,062,738
ACID NICKEL ELECTROPLATING ADDITIVE THEREFOR AND METHOD OF MAKING SAID ADDITIVE
John Derek Rushmere, Wilmington, Del., assignor to E. I. Du Pont de Nemours and Company, Wilmington, Del.
Continuation-in-part of Ser. No. 512,139, Oct. 4, 1974, abandoned, which is a continuation-in-part of Ser. No. 428,808, Dec. 27, 1973, abandoned. This application May 26, 1976, Ser. No. 690,315
Int. Cl.² C25D *3/16;* **C09K** *3/00;* **C07C** *143/16*
U.S. Cl. 204—49 **9 Claims**
1. A process for making an additive for acid nickel electroplating baths, the process comprising
a. contacting about 0.5 to 1.5 moles of propylene oxide with about 1 mole of liquid 2-butyne 1,4-diol in the presence of a boron trifluoride catalyst, to produce a first reaction product;
b. contacting the first reaction product with about 1 to 2 moles of epichlorohydrin per mole of 2-butyne 1,4-diol, in the presence of a boron trifluoride catalyst, to produce a second reaction product;
the amounts of propylene oxide in (a) and epichlorohydrin in (b) being such that the total amount of propylene oxide and epichlorohydrin used is 2 to 3 moles per mole of 2-butyne 1,4-diol, and then
c. contacting the second reaction product with aqueous sodium sulfite.
3. The additive produced by the process of claim 1.
4. An aqueous acid nickel electroplating bath containing, as a primary brightener, the additive of claim 3.

4,062,739
ELECTROPLATING ZINC OR CADMIUM AND ADDITIVE COMPOSITION THEREFOR
Barrie Sidney James, Kingswinford, and Apolonious Wyszynski, Sutton Coldfield, both of England, assignors to W. Canning Limited, London, England
Division of Ser. No. 457,611, April 3, 1974, abandoned. This application May 18, 1976, Ser. No. 687,455
Claims priority, application United Kingdom, Apr. 4, 1973, 16172/73
Int. Cl.² C25D *3/24, 3/28*
U.S. Cl. 204—50 Y **13 Claims**
9. In an aqueous plating bath for the electroplating of zinc or cadmium including an effective amount of brightening additive, the improvement comprising:
said brightening additive being a mixture produced by reaction in a liquid media selected from the group consisting of water and short-chain aliphatic alcohols and mixtures thereof of
a. a substituted pyridine in which the pyridine is substituted only with at least one member selected from the group consisting of cyano, alkyl, hydroxy, carboxy and carboxy salts with ammonia, amines and Groups I and II metals, $—CONR^1R^2$ wherein R^1 and R^2 are individually selected from the group consisting of hydrogen, alkyl, and phenyl; and $COOR^3$, wherein R^3 is selected from the group consisting of alkyl, benzyl and phenyl; and
b. an oxirane of the formula

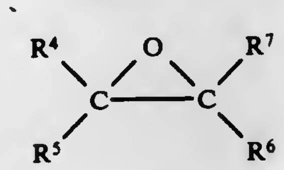

wherein R^4, R^5, R^6 and R^7 are each selected from the group consisting of hydrogen, alkyl, alkenyl, alkyl and alkenyl interrupted by an ether linkage, and phenyl;
the molar ratio of component (a) to component (b) being from 2:1 to 1:2.
13. A brightening additive composition for the plating of zinc or cadmium comprising.
A. a brightening additive selected from the group consisting of a synthetic polymer, a naturally occurring polysaccharide polymer, a proteinaceous substance and an aldehyde brightener; and
B. a mixture produced by reaction in a liquid media selected from the group consisting of water and short-chain aliphatic alcohols and mixtures thereof of
a. a substituted pyridine in which the pyridine is substituted only with at least one member selected from the group consisting of cyano, alkyl, hydroxy, carboxy and carboxy salts with ammonia, amines and Groups I and II metals, $—CONR^1R^2$ wherein R^1 and R^2 are individually selected from the group consisting of hydrogen, alkyl, and phenyl; and $COOR^3$, wherein R^3 is selected from the group consisting of alkyl, benzyl and phenyl; and
b. an oxirane of the formula

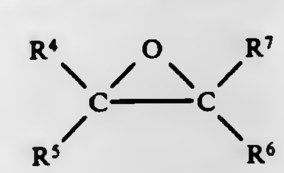

wherein R^4, R^5, R^6 and R^7 are each selected from the group consisting of hydrogen, alkyl, alkenyl, alkyl and alkenyl interrupted by an ether linkage, and phenyl;
the molar ratio of component (a) to component (b) being from 2:1 to 1:2.

4,062,740
BATH FOR DIRECT CHROME-PLATING OF CALENDER ROLLS
Wilhelm Bauer, Am Wohren 1, and Hans Bauer, Susseroder Strasse 45, both of 3000 Hannover 73, Germany
Filed Jan. 14, 1977, Ser. No. 759,457
Claims priority, application Germany, Feb. 20, 1976, 2606852
Int. Cl.² C25D *3/04, 3/56, 7/00*
U.S. Cl. 204—51 **4 Claims**
1. A bath for direct chrome-plating of calender rolls, consisting of an aqueous solution containing chromic acid (CrO_3), sulfuric acid (H_2SO_4) and fluosilicic acid (H_2SiF_6), wherein the improvement in said bath comprises:
copper sulfate ($CuSO_4$) and potassium aluminum sulfate [$KAl(SO_4)_2$].

4,062,741
METHOD FOR MAINTAINING AN ELECTRODE AND AN ARTICLE PLATED OR TO BE PLATED IMMERSED IN AN ELECTROLYTIC CHROMIUM-PLATING BATH IN A NORMAL CONDITION
Akira Harayama, Okaya, Japan, assignor to Teikoku Piston Ring Co., Ltd., Japan
Filed Feb. 20, 1976, Ser. No. 659,799
Int. Cl.² C25D *3/04, 5/00*
U.S. Cl. 204—51 **5 Claims**

1. A method for protecting an anode and a cathode from deterioration during the period (1) prior to supplying electricity for plating, or (2) during an interruption in the supply of electricity during plating, said anode and said cathode remaining immersed during said period in an electrolytic, chromium-plating bath, which both tends to deteriorate said anode and said cathode during said period, said cathode consisting of a partially plated article or an article to be plated, said method comprising the step of:
normalizing said anode and said cathode in said bath during said period by maintaining a current between said anode and said cathode by impressing a low D.C. voltage of from about 1.27 to 2.2 volts, therebetween, whereby said anode and said cathode are protected from deterioration during said period.

4,062,742
ZINC PLATING PROCESS
Shigeru Fujita, Omiya; Koichi Murayama, Tokyo; Toyohito Kaneda, Yono; Susumu Harada, Tokyo, and Toshio Ueda, Koriyama, all of Japan, assignors to Kabushiki Kaisha Japan Metal Finishing Co., Tokyo and Nitto Boseki Kabushiki Kaisha, Fukushima, both of, Japan
Filed Mar. 7, 1977, Ser. No. 775,323
Claims priority, application Japan, Mar. 9, 1976, 51-25401
Int. Cl.² C25D *3/22*
U.S. Cl. 204—55 R **5 Claims**
1. A zinc plating process comprising adding water-soluble,

amphoteric polysulfone compounds and, optionally, aromatic aldehydes to a zinc plating bath of an alkalizincate type and subjecting the resulting bath to electrodeposition conditions, said amphoteric polysulfone compounds having the formula

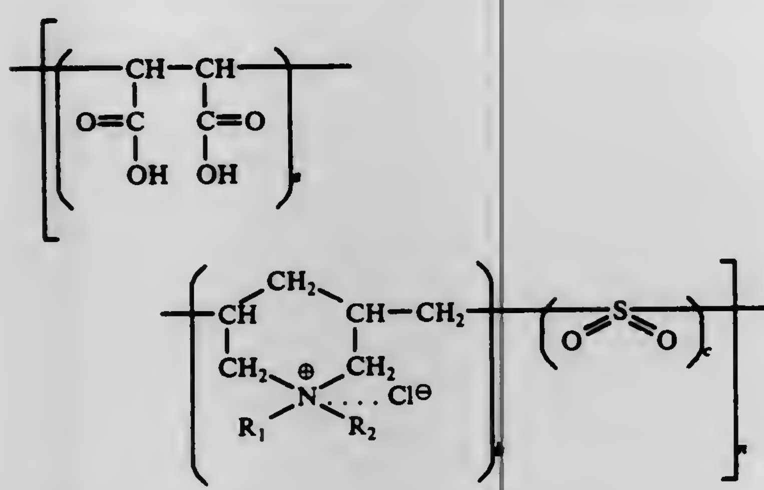

wherein: R_1 and R_2 each independently represent a straight or branched chain alkyl group having from 1 to 4 carbon atoms or 2-hydroxyethyl group; a is in the range of 0.03 to 0.5; b is in the range of 0.3 to 0.77, c is in the range of 0.2 to 0.4, provided that c is not greater than $b \times 0.8$; and n is in the range of about 5 to about 100.

4,062,743
ELECTROLYTIC PROCESS FOR POTASSIUM HYDROXIDE
Byung K. Ahn, and Ronald L. Dotson, both of Cleveland, Tenn.
Continuation-in-part of Ser. No. 643,264, Dec. 22, 1975. This application Apr. 27, 1976, Ser. No. 680,702
Int. Cl.² C25B *1/16, 1/26*
U.S. Cl. 204—98 **9 Claims**

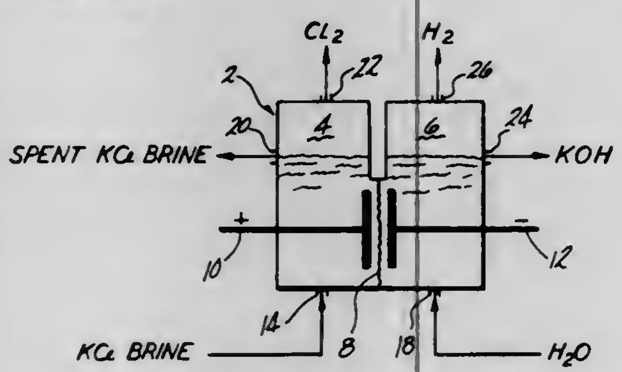

1. A process for the production of chlorine gas and potassium hydroxide by the electrolysis of an aqueous solution of potassium chloride in an electrolytic cell having an anode compartment containing an anode and a cathode compartment containing a cathode, said process comprising:

a. separating said anode compartment from said cathode compartment with a cation permselective membrane comprised of a hydrolyzed copolymer of a perfluoroolefin and a fluorosulfonated perfluorovinyl ether of the formula

$FSO_2CFRCF_2O[CFYCF_2O]_nCF{=}CF_2$

where R is a radical selected from the group consisting of fluorine and perfluoroalkyl radicals having from 1 to about 8 carbon atoms; Y is a radical selected from the group consisting of fluorine and trifluoromethyl; and n is an integer of 0 to about 3, said hydrolyzed copolymer having an equivalent weight of from about 900 to about 1600,

b. introducing said aqueous solution of said potassium chloride containing from about 250 to about 350 grams per liter of KCl into said anode compartment,

c. impressing an electrolyzing current between said anode and said cathode to produce chlorine gas in said anode compartment and an aqueous solution of potassium hydroxide in said cathode compartment,

d. maintaining the concentration of said aqueous solution of potassium hydroxide at from about 410 to about 480 grams per liter of KOH in said cathode compartment.

4,062,744
EXTRACTION OF COPPER FROM SULFIDE ORES
Thomas A. Henrie, Silver Spring, Md.; Roald E. Lindstrom, Reno, and Kenneth P. V. Lei, Sparks, both of Nev., assignors to The United States of America as represented by the Secretary of the Interior, Washington, D.C.
Filed July 16, 1976, Ser. No. 706,103
Int. Cl.² C25C *1/12, 7/00*
U.S. Cl. 204—106 **4 Claims**

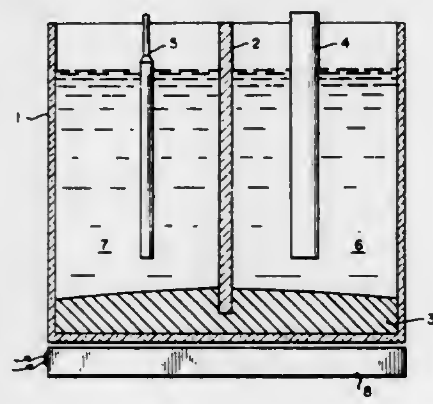

1. A process for recovery of copper from sulfide ores or concentrates comprising providing an electrolytic cell consisting essentially of (1) an anode section containing an aqueous electrolyte slurry of the ore or concentrate, (2) a separate cathode section, and (3) an intermediate electrode consisting essentially of a liquid copper-mercury alloy at a temperature of about 85° to 100° C between said anode section and said cathode section, and operating said cell for a time sufficient to effect substantial decomposition of the ore or concentrate at the anode and deposition of metallic copper at the cathode.

4,062,745
POLYCONJUGATED OXIDATION-REDUCTION POLYMERS, PROCESSES FOR THE ELECTRO-CHEMICAL REGENERATION OF
René Buvet, Cachan; Roger Vallot, Brunoy; Richard Messina, Boussy St. Antoine; Jacques Gal, Paris, and Liang-Tsé Yu, Sucy en Brie, all of France, assignors to Agence Nationale de Valorisation de la Recherche (ANVAR), Neuilly-sur-Seine, France
Filed June 9, 1976, Ser. No. 694,397
Claims priority, application Germany, June 12, 1975, 7518383[U]
Int. Cl.² C25B *3/02, 3/04*
U.S. Cl. 204—131 **9 Claims**

1. Process for electro-chemical oxidation or reduction of correspondingly previously reduced or oxidized solid, water-insoluble, electrically conductive, polyconjugated oxidation-reduction polymers, to thereby regenerate such polymers, comprising:

introducing the polymer to be regenerated into a column or analogous tubular body of inert material having therein a working electrode and an auxiliary electrode, each of chemically and electro-chemically inert but electrically conductive material, a porous wall separating the working electrode from the auxiliary electrode and through which ions may pass but chemical species in gaseous form produced in the course of the regeneration cannot pass, and a reference electrode;

introducing electrolyte into the column to an extent such that all of the polymer is impregnated with the electrolyte and is covered thereby with a sufficient layer for the reference electrode to dip thereinto;

connecting the electrodes to a 3-terminal potentiostat; and

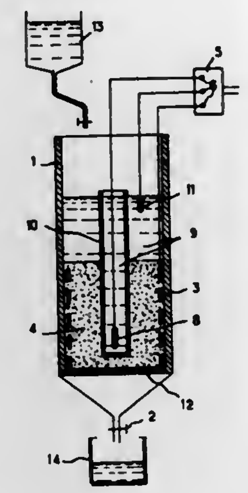

operating the potentiostat in either intensiostatic coulometry or in potentiostatic coulometry.

4,062,746
SOLID PHASE SYNTHESIS OF PROTECTED PEPTIDES
Daniel H. Rich, Madison, Wis., and Sweet K. Gurwara, Williamsville, N.Y., assignors to Wisconsin Alumni Research Foundation, Madison, Wis.
Filed May 7, 1975, Ser. No. 575,478
Int. Cl.² C08L *81/00*
U.S. Cl. 204—159.12 **4 Claims**

1. The product having the general formula

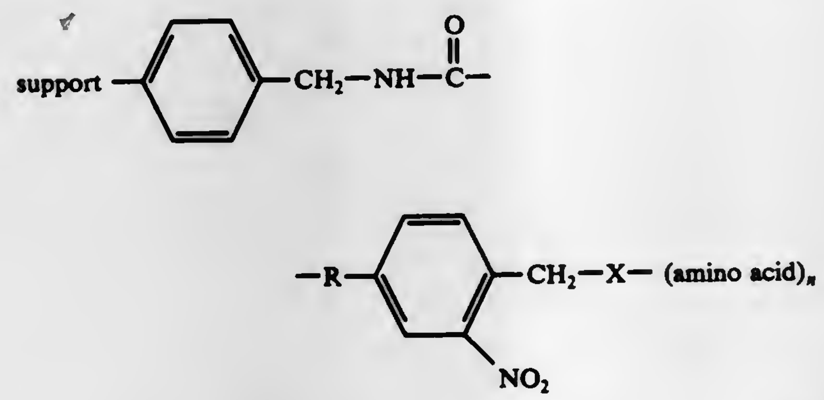

in which R is 0–8 carbon atoms in an alkyl or substituted alkyl group, X is NH, n is a number up to about 50 and the term amino acid denotes any one of the amino acids and peptides and mixtures thereof.

4,062,747
NATIVE GROWTH OF SEMICONDUCTOR OXIDE LAYERS
Robert Pang Heng Chang, Warren, and Ashok Kumar Sinha, Murray Hill, both of N.J., assignors to Bell Telephone Laboratories, Incorporated, Murray Hill, N.J.
Filed June 15, 1976, Ser. No. 696,282
Int. Cl.² B01K *1/00*
U.S. Cl. 204—164 **12 Claims**

1. A method of growing a native semiconductor oxide layer comprising:

A. placing a semiconductor substrate in an oxygen environment comprising oxygen at a pressure of less than 9×10^{-3} torr;

B. directing a beam comprising essentially electrons of density between 10^8 electrons/cc and 10^{12} electrons/cc toward the substrate; and

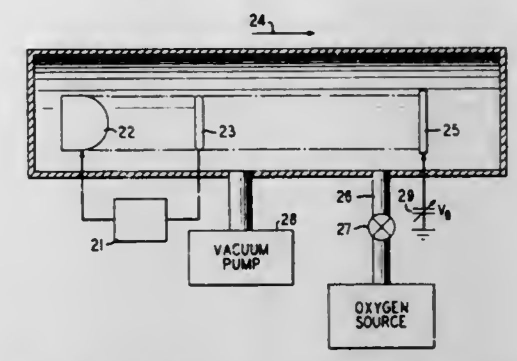

C. biasing the substrate between 0.2 and 500 volts positive with respect to the source of electrons,

whereby a native semiconductor oxide layer is grown.

4,062,748
METHOD AND APPARATUS FOR PRODUCING OZONE
Pavel Imris, 5287-5 Rivendell, Columbia, Md. 20144
Filed Aug. 24, 1976, Ser. No. 717,190
Claims priority, application Germany, Sept. 6, 1975, 2539715
Int. Cl.² C01B *13/10, 13/11*
U.S. Cl. 204—176 **22 Claims**

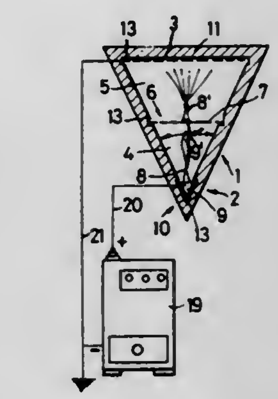

1. A process for producing ozone from a gas comprising oxygen which comprises passing a stream of gas comprising oxygen through a discharge chamber made from an electrically non-conductive material and having located therein a discharge electrode and an earthed electrode; providing at least one bipolar electrode between said electrodes to receive an electrical discharge from said discharge electrode and having a plurality of discharge points directed towards said earthed electrode; and applying a discharge potential to said discharge electrode.

4. Apparatus for producing ozone from a gas comprising oxygen, comprising a discharge chamber made from an electrically non-conductive material and having located therein a discharge electrode and an earthed electrode; means for passing a stream of gas through the discharge chamber between said electrodes; at least one bipolar electrode located between said electrodes and serving to divide the discharge chamber into at least two discharge channels, said at least one bipolar electrode having a surface adapted to receive an electrical discharge from said discharge electrode and a plurality of discharge points on an oppositely disposed surface thereof directed toward said earthed electrode; said discharge electrode having a plurality of discharge points directed toward said surface of the bipolar electrode adapted to receive an electrical discharge from said discharge electrode.

4,062,749

METHOD OF FORMING A THIN FILM CAPACITOR WITH A MANGANESE DIOXIDE LAYER

Peter L. Young, Horseheads, N.Y., assignor to Corning Glass Works, Corning, N.Y.

Filed Feb. 9, 1976, Ser. No. 656,523

Int. Cl.² C23C *15/00*

U.S. Cl. 204—192 SP **9 Claims**

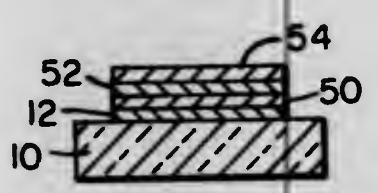

1. A method of forming a capacitor comprising the sequential steps of

providing a dielectric substrate,

applying to said dielectric substrate an electrically conductive film to form a first capacitor electrode,

applying a layer of manganese dioxide over said electrically conductive film,

disposing said substrate and conductive film within a vacuum environment containing an oxygen-inert gas mixture,

r-f sputtering a film of tantalum oxide of desired thickness over said layer of manganese dioxide within said vacuum environment, said tantalum oxide being sputtered from a tantalum oxide target,

cooling said dielectric substrate, conductive film and layer of manganese dioxide while said film of tantalum oxide is being sputtered thereon, and thereafter

applying an electrically conductive film over said film of tantalum oxide to form a counter capacitor electrode.

9. A thin film capacitor formed by the method of claim 1.

4,062,750

THIN FILM ELECTROCHEMICAL ELECTRODE AND CELL

James Francis Butler, 41 Dundonald St., Suite 902, Toronto, Ontario, Canada (M4Y 1K6)

Filed Dec. 18, 1974, Ser. No. 534,049

Int. Cl.² G01N *27/30, 27/50*

U.S. Cl. 204—195 P **12 Claims**

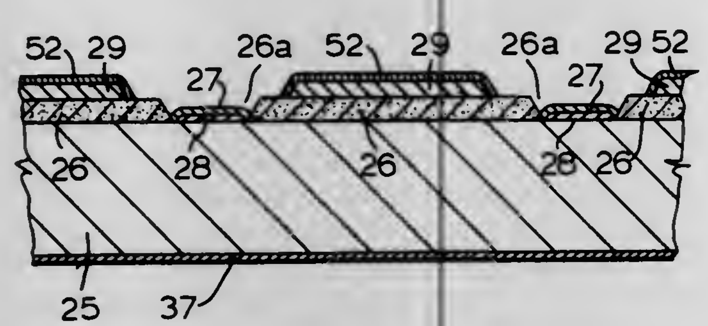

1. An electro-chemical cell comprising:

a. a conducting substrate having a first face having a first thin film insulating layer thereon,

b. said first insulating layer having a plurality of small holes therein, and a plurality of thin film microcathodes located in said holes, said microcathodes being electrically connected to said substrate,

c. a continuous thin film anode layer on said first insulating layer and surrounding said microcathodes, said anode layer being electrically insulated from said microcathodes and said substrate by said first insulating layer,

d. a cathode contact connected electrically to said substrate and thereby being electrically connected to said cathodes,

e. an anode contact electrically connected to said anode layer,

f. a layer of electrolyte located over said microcathodes and said anode layer and connecting the same,

g. and a membrane of selected permeability covering said electrolyte.

4,062,751

ELECTROPLATING DRUM FOR RELATIVELY LARGE FASTENERS AND THE LIKE

Arthur S. Yamada, Los Angeles, Calif., assignor to TRW Inc., Redondo Beach, Calif.

Filed June 28, 1976, Ser. No. 700,699

Int. Cl.² C25D *17/06, 17/16*

U.S. Cl. 204—212 **19 Claims**

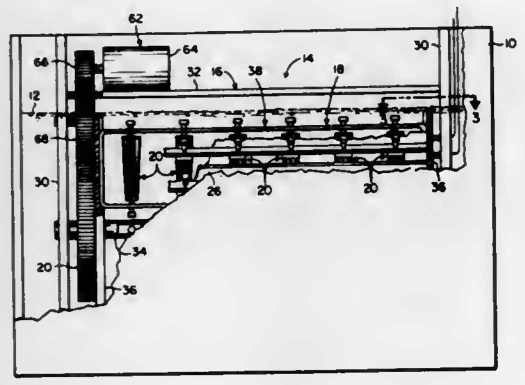

1. Electroplating apparatus for electroplating relatively large parts, such as large fasteners and the like, comprising:

an electroplating drum to be rotated in an electroplating solution and including a plurality of plating cells having openings for entrance of said plating solution into the cells;

each plating cell containing a pair of spaced first electrodes of the same polarity and adapted to receive between said electrodes a single part to be plated for limited back and forth movement of the part between the electrodes during rotation of said drum in said solution to expose the entire surface area of the part to the solution;

a second electrode of the opposite polarity adjacent each plating cell; and

means for connecting said electrodes to a plating voltage source.

4,062,752

PLATING MECHANISM

Myron Lester Peterson, 3015 Cedar St., Las Vegas, Nev. 89104

Filed Oct. 4, 1976, Ser. No. 729,304

Int. Cl.² C25D *17/16, 17/10*

U.S. Cl. 204—213 **10 Claims**

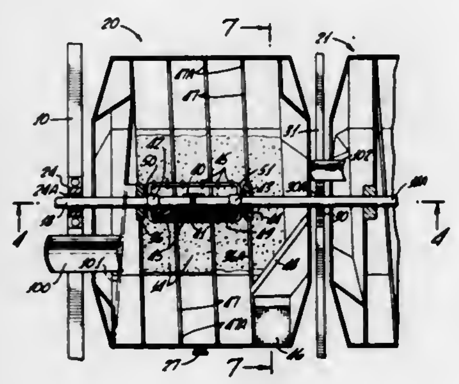

1. A plating mechanism comprising:

at least one drum rotatably mounted to pass through a plating medium,

a continuous channel defined on the inner surface of said drum to define a path for transporting material through said drum as said drum rotates,

a substantially centrally located rod means passing through the axis of rotation of said drum,

said rod means includes at least two electrically conductive rod members adapted to receive different electrical signals, and

insulating means arranged to join said rod members in non-conductive fashion.

4,062,753

ELECTROLYSIS METHOD AND APPARATUS

Ralph Falvo, Niagara Falls, N.Y., assignor to Hooker Chemicals & Plastics Corporation, Niagara Falls, N.Y.

Division of Ser. No. 335,975, Feb. 26, 1973, Pat. No. 3,976,549. This application June 4, 1976, Ser. No. 692,818

Int. Cl.² C25B *1/16, 1/26, 13/04, 13/08*

U.S. Cl. 204—266 **15 Claims**

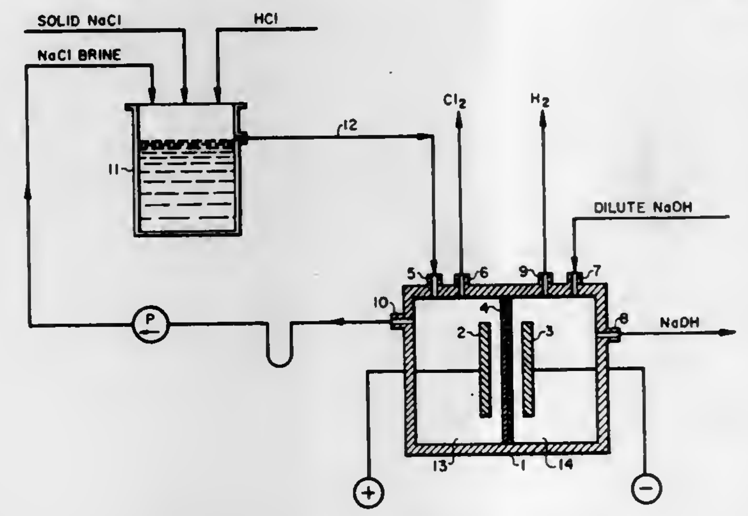

1. An electrolysis cell comprising a housing, an anode, a cathode, and a permselective barrier substantially impervious to liquids and gases separating said anode and said cathode, said barrier consisting essentially of at least two layers of a hydrolyzed copolymer of tetrafluoroethylene and a sulfonated perfluorovinyl ether of the formula

$$FSO_2CF_2CF_2OCF(CF_3)CF_2OCF{=}CF_2$$

said copolymer having an equivalent weight of from about 900 to 1600.

4,062,754

APPARATUS FOR DESTROYING MICROORGANISMS IN AN AQUEOUS LIQUID BY ELECTROLYTIC OXIDATION

Volker Eibl, Munich, Germany, assignor to Sachs Systemtechnik GmbH, Schweinfurt am Main, Germany

Filed Aug. 27, 1975, Ser. No. 608,245

Claims priority, application Germany, Sept. 5, 1974, 2442474

Int. Cl.² C02B *1/82*

U.S. Cl. 204—268 **10 Claims**

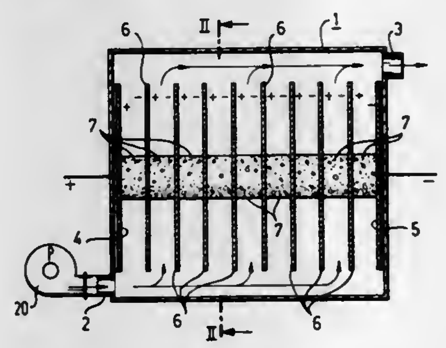

1. Apparatus for destroying microorganisms in an aqueous liquid comprising:

a. a vessel bounding a cavity;

b. a row of electrodes mounted in said cavity in spaced, electrically insulated relationship and including two terminal, main electrodes and at least one auxiliary electrode interposed between said main electrodes,

1. each main electrode having a face spacedly opposite the corresponding face of the other main electrode,

2. said at least one auxiliary electrode having two faces substantially parallel to said respective faces of said main electrodes, said two faces being arcuate about a common axis of curvature, the axes of curvature of the faces of said at least one auxiliary electrode substantially coinciding,

3. respective faces of each pair of adjacent electrodes in said row defining therebetween a channel for flow of liquid parallel to the defining faces;

c. conductive means for connecting said main electrodes to respective terminals of a source of electric power and for thereby establishing a voltage between said main electrodes;

d. inlet means and outlet means on said vessel for simultaneously passing therebetween respective portions of a stream of aqueous liquid through said channels, each of said portions providing the sole path of electric current between the pair of electrodes defining the associated channel.

4,062,755

ELECTROPLATING ANODE PLENUM

Dennis Robert Turner, Chatham Township, Morris County, N.J., assignor to Bell Telephone Laboratories, Incorporated, Murray Hill, N.J.

Filed May 3, 1976, Ser. No. 682,729

Int. Cl.² C25C *1/08, 7/02*

U.S. Cl. 204—275 **4 Claims**

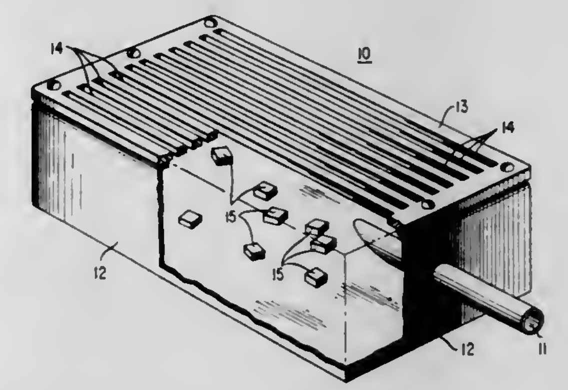

1. Plating apparatus comprising a sparging means for continually introducing plating solution into a plating tank from a position below the location of the articles to be plated CHARACTERIZED IN THAT the sparging means includes a sparging plenum consisting essentially of an anode structure, an electrically insulating partition possessing a regular array of uniformly space slots, which partition is disposed between the anode structure and the location of the articles to be plated, a plating solution inlet situated on the same side of the partition as the anode structure and flow restriction means for insuring that at least the principal part of the solution flowing into the tank from the inlet must flow through the partition to reach the position of the articles to be plated which apparatus also includes means for holding planar articles to be plated with one edge of each article adjacent to the land between succeeding slots.

4,062,756

LIQUID FLOW DISTRIBUTION SCREEN

Anil D. Jha, Littleton, and Gary C. Ganzi, Lexington, both of Mass., assignors to Ionics, Inc., Watertown, Mass.

Filed Mar. 7, 1977, Ser. No. 774,823

Int. Cl.² B01D *13/02*

U.S. Cl. 204—301 **7 Claims**

1. A liquid flow distribution screen for routing and channelling a liquid over a surface comprising in combination:

a. a first set of spaced apart strand elements of a first substantially uniform thickness arranged in a plane to define a base plane of said screen:

b. a second set of spaced apart strand elements attached to and oriented at an angle to said first set, all of said second set positioned coincident with said first set at the base plane of said screen, a portion of said second set arranged

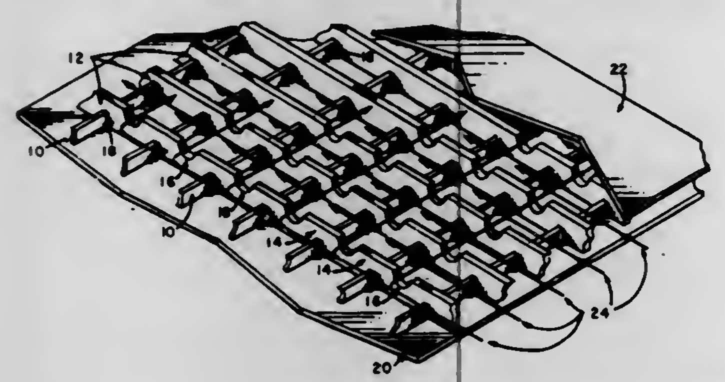

to be of a second substantially uniform thickness greater than that of said first set to define an upper plane of said screen, and a portion of said second set arranged to be of a lesser thickness than said second uniform thickness whereby a plurality of flow channels are created across said screen in both the directions of said first and second set of strand elements.

4,062,757

RESIDUE THERMAL CRACKING PROCESS IN A PACKED BED REACTOR

Harold Beuther, Gibsonia, and Angelo A. Montagna, Monroeville, both of Pa., assignors to Gulf Research & Development Company, Pittsburgh, Pa.

Continuation-in-part of Ser. No. 597,385, July 18, 1975, abandoned. This application Dec. 1, 1976, Ser. No. 746,485

Int. Cl.[2] C10G *37/04, 37/06*

U.S. Cl. 208—61 **8 Claims**

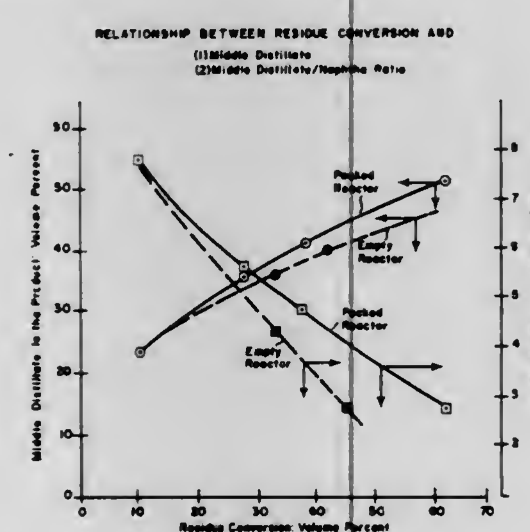

1. A process comprising passing an asphaltene-containing residual oil which has not been deasphalted and hydrogen through a catalytic hydrodesulfurization zone at a temperature between 690° and 790° F., passing asphaltene-containing hydrodesulfurized residual oil from said hydrodesulfurization zone through a thermal cracking zone containing a fixed bed of inert solids at a temperature between 750° and 1,000° F. which is above the hydrodesulfurization zone temperature to thermally crack said hydrodesulfurized oil to produce cracked products comprising both middle distillates boiling in the 350° to 650° F. range and naphtha boiling below 350° F., the ratio of middle distillates to naphtha in said cracked products being greater than one.

4,062,758

PROCESS FOR THE CONVERSION OF HYDROCARBONS IN ATMOSPHERIC CRUDE RESIDUE

Frans Goudriaan, and Jakob van Klinken, both of Amsterdam, Netherlands, assignors to Shell Oil Company, Houston, Tex.

Filed Aug. 26, 1976, Ser. No. 717,972

Claims priority, application Netherlands, Sept. 5, 1975, 7510465

Int. Cl.[2] C10G *39/00, 13/06*

U.S. Cl. 208—80 **8 Claims**

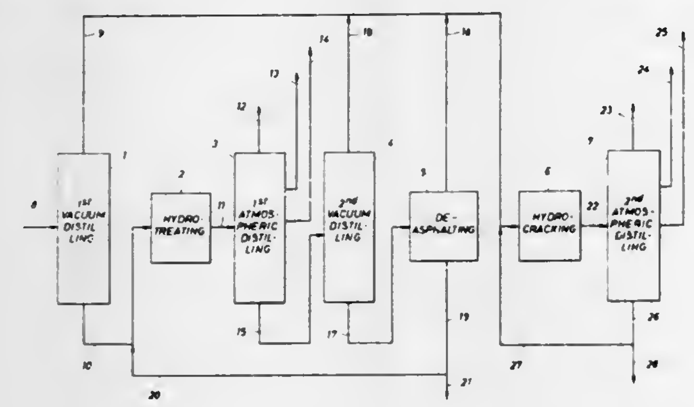

1. A process for the production of at least one atmospheric hydrocarbon oil distillate from an atmospheric hydrocarbon oil residue comprising:

a. distilling said atmospheric residue by vacuum distillation in a first vacuum distillation zone to obtain a vacuum distillate, which is passed to step *f*, and a vacuum residue,

b. hydrotreating said vacuum residue in a hydrotreating zone to obtain a hydrotreated product,

c. distilling said hydrotreated product in a first atmospheric distillation zone to obtain at least one light atmospheric distillate, an atmospheric middle distillate and an atmospheric hydrotreated residue,

d. distilling said atmospheric hydrotreated residue in a second vacuum distillation zone to obtain a vacuum hydrotreated distillate and a vacuum hydrotreated residue,

e. recycling at least part of the vacuum hydrotreated residue from step *d* to the hydrotreating zone of step *b*,

f. hydrocracking the vacuum distillates from step *a* and the vacuum hydrotreated distillate from step (d) in a hydrocracking zone, to obtain a hydrocracked product,

g. distilling said hydrocracked product in a second atmospheric distillation zone to obtain at least one light atmospheric hydrocracked hydrocarbon oil distillate and a hydrocracked residue, and

h. recycling at least part of the hydrocracked residue from step *g* to the hydrocracking zone of step *f*.

4,062,759

FLUIDIZED CATALYTIC CRACKING REGENERATION PROCESS

Leonce F. Castagnos, Jr., Nederland, and Roy E. Pratt, Groves, both of Tex., assignors to Texaco Inc., New York, N.Y.

Filed May 7, 1976, Ser. No. 684,338

Int. Cl.[2] C10G *13/02;* **B01J** *8/24;* **C01B** *29/12*

U.S. Cl. 208—113 **9 Claims**

1. In a fluidized catalytic cracking process wherein a hydrocarbon charge is cracked, in a reaction zone, in the presence of hot, regenerated cracking catalyst, for conversion of the hydrocarbon charge into lower boiling hydrocarbon product, wherein catalyst, spent by the accumulation of coke thereon is separated from the hydrocarbon product at a temperature in the range of about 750°-1100° F, and wherein the spent catalyst is regenerated, in a regeneration zone, by burning coke therefrom; the improvement which comprises:

a. charging spent catalyst substantially vertically downward into a vertical, cylindrical lower regeneration zone;

b. charging an oxygen containing primary regeneration gas, under turbulent flow conditions, at a flow rate sufficient to provide about 25 to 40 percent of the stoichiometric

amount of oxygen required for combusting the coke on spent catalyst to carbon dioxide and water, for forming an intimate mixture of spent catalyst and primary regeneration gas;

c. flowing the catalyst-primary regeneration gas mixture upward through said lower regeneration zone at a superficial vapor velocity in the range of about 4.5–8 ft/sec, and a catalyst residence time in the range of about 1.0 seconds to 1 minute into the bottom of a vertical, cylindrical upper regeneration zone for catalyst regeneration;

d. radially distributing an oxygen containing secondary regeneration gas into the bottom of the upper regeneration zone at a flow rate sufficient to provide about 60 to 85 percent of the stoichiometric amount of oxygen required for combustion of the coke to carbon dioxide and water such that about 100 to 110 percent of the stoichiometric amount oxygen required for combustion of coke to carbon dioxide and water is supplied to the upper and lower regeneration zone;

e. maintaining, in said upper regeneration zone, a fluidized dense phase bed of catalyst undergoing regeneration, having an upper surface, a regeneration gas superficial vapor velocity in the range of about 2.5–6.0 ft/sec, a catalyst residence time in the range of about 3–20 minutes, a pressure at the upper surface in the range of 6–50 psig, an a temperature in the range of about 1150°-1350° F, for burning coke from the catalyst undergoing regeneration at

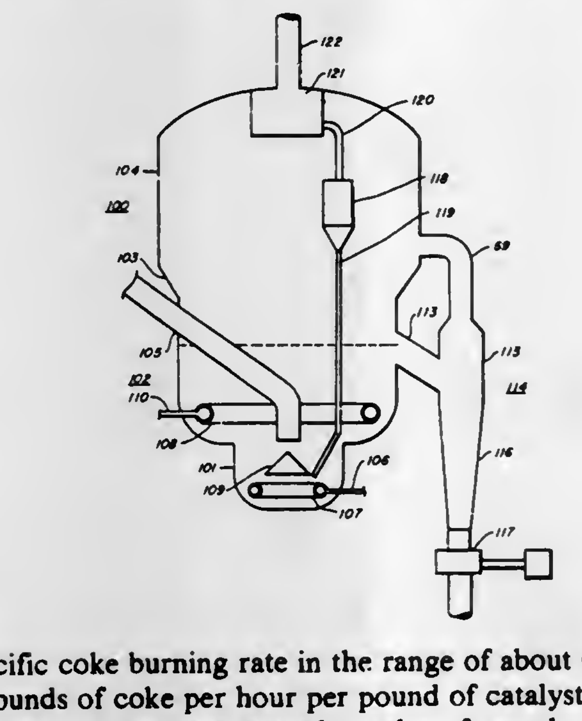

a specific coke burning rate in the range of about 0.05 to 1.0 pounds of coke per hour per pound of catalyst;

f. withdrawing hot regenerated catalyst from the upper portion of the fluidized dense phase catalyst bed for contact with additional hydrocarbon charge in the reaction zone;

g. disengaging regeneration gas, comprising carbon dioxide and carbon monoxide, substantially spent in oxygen, and containing entrained catalyst from the upper surface of the fluidized dense phase catalyst bed;

h. flowing the spent regeneration gas and entrained catalyst from the top of the upper regeneration zone into a frustoconic transition zone wherein the spent regeneration gas superficial vapor velocity decreases from about 2.5–6 ft/sec at the bottom, to about 1.0–2.2 ft/sec at the top of the transition zone, wherein a major portion of the entrained catalyst disengages the spent regeneration gas and returns to the fluidized dense phase bed under the influence of gravity, and wherein a dilute phase of catalyst suspended in spent regeneration gas is formed;

i. flowing the dilute phase from the top of the transition zone into the bottom of a cylindrical dilute phase regeneration zone at a superficial vapor velocity in the range of about 1.0–2.0 ft/sec and a temperature in the range of about 1150 ° to 1450° F;

j. separating, in a separation zone, the dilute phase into a catalyst phase and spent regeneration gas phase essentially free of entrained catalyst;

k. transferring the separated catalyst from the separation zone to the lower regeneration zone for contact with additional spent catalyst and primary regeneration gas; and

l. venting the spent regeneration gas essentially free of entrained catalyst from the separation zone as a flue gas.

4,062,760

DRY FINES RECYCLE IN A COKING PROCESS

Don E. Blaser, Randolph, N.J., assignor to Exxon Research and Engineering Company, Linden, N.J.

Filed Apr. 20, 1976, Ser. No. 678,626

Int. Cl.[2] C10G *9/32;* **C10J** *3/16*

U.S. Cl. 208—127 **16 Claims**

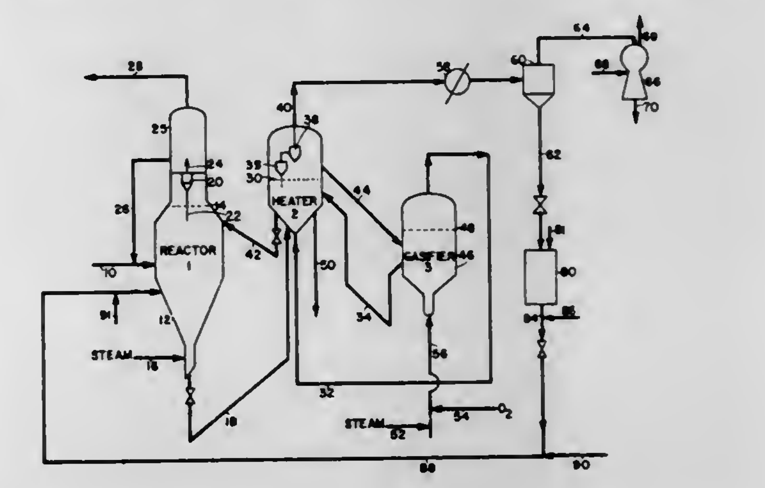

1. In a coking process comprising the steps of:

a. contacting a carbonaceous material under fluid coking conditions in a coking zone containing a first bed of fluidized solids to form coke, said coke depositing on said fluidized solids;

b. introducing a portion of said solids with a coke deposition thereon to a second zone containing a second bed of fluidized solids;

c. recovering from said second zone a gaseous stream containing entrained solid fines; and

d. separating at least a portion of said fines from said gaseous stream as dry fines having a particle size ranging up to about 74 microns, the improvement which comprises:

e. mixing said portion of said separated dry fines with a gas, said portion of said separated dry fines consisting entirely of particles not greater than 74 microns, and

f. introducing the resulting mixture of dry fines and gas into said coking zone at a velocity of at least 25 feet per second, said dry fines in said mixture consisting entirely or particles not greater than 74 microns.

4,062,761

METHOD FOR VARYING THE CATALYST CIRCULATION RATE IN A FLUID CATALYTIC CRACKING PROCESS

Edward C. Luckenbach, Mountainside, N.J., assignor to Exxon Research and Engineering Company, Linden, N.J.

Filed Nov. 28, 1975, Ser. No. 636,207

Int. Cl.[2] C10G *11/18*

U.S. Cl. 208—164 **4 Claims**

1. In a fluid catalytic cracking process which comprises contacting a hydrocarbon feedstock with a cracking catalyst in a cracking zone under cracking conditions to produce hydrocarbon vapors and coke contaminated catalyst particles, separating said hydrocarbon vapors from the coke contaminated catalyst particles, passing said cracked hydrocarbon vapors to a recovery zone, stripping said coke contaminated catalyst particles of residual hydrocarbon vapors in a stripping zone, passing the coke contaminated catalyst particles to a regeneration zone via a coke contaminated catalyst circuit containing a

control riser, regenerating said coke contaminated catalyst in a regeneration zone, the catalyst circulation rate in said process being regulated by injecting variable amounts of a control gas into said control riser, the improvement which comprises

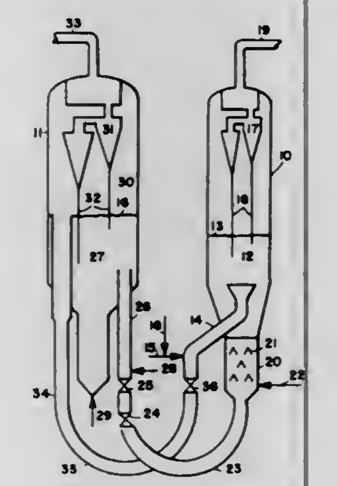

varying the pressure drop across the control riser within a range of from about 1 to about 3 psi by use of a valve means while maintaining the pressure differential between the regeneration zone and the cracking zone substantially constant and thereby varying said catalyst circulation rate.

4,062,762
PROCESS FOR DESULFURIZING AND BLENDING NAPHTHA
Kent A. Howard, 8234 Old Hammond; William E. Winter, Jr., 11852 Parkmeadow Ave.; Karsten H. Moritz, 13030 Norma Court, all of Baton Rouge, La. 70816, and John D. Paynter, 12666 Glenhaven Drive, Baton Rouge, La. 70815
Filed Sept. 14, 1976, Ser. No. 723,152
Int. Cl.² C10G *34/00, 23/00, 29/04*
U.S. Cl. 208—211 **14 Claims**

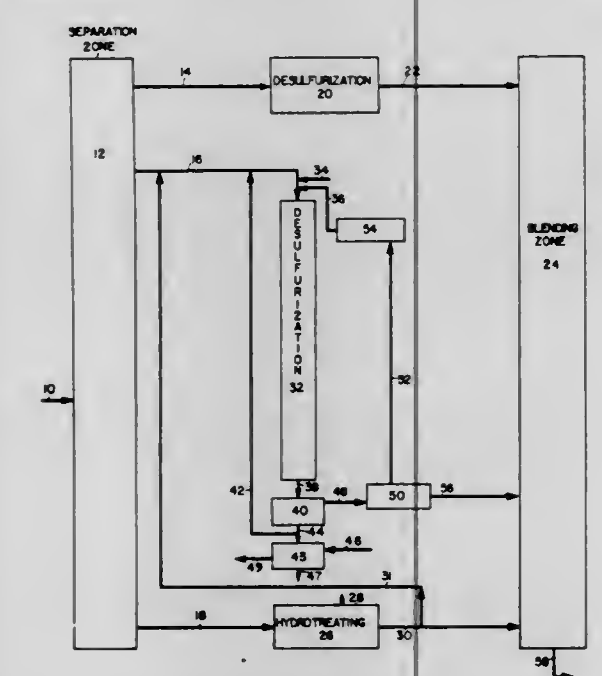

1. A process for desulfurizing a sulfur-containing naphtha, which comprises the steps of:
a. separating said naphtha into at least a lower boiling fraction, an intermediate boiling fraction and a higher boiling fraction;
b. contacting said intermediate boiling fraction with an alkali metal to desulfurize said fraction;
c. contacting said higher boiling fraction with hydrogen and a hydrodesulfurization catalyst to hydrodesulfurize said fraction;
d. recovering desulfurized products from step (b) and step (c), and
e. blending the desulfurized products recovered in step (d) and said lower boiling fraction to produce a low sulfur content naphtha.

4,062,763
REACTIVATION OF HYDROFINISHING CATALYST FOR COLOR REMOVAL ACTIVITY
Costandi A. Audeh, Princeton, and Robert F. Bridger, Hopewell, both of N.J., assignors to Mobil Oil Corporation, New York, N.Y.
Filed Aug. 26, 1976, Ser. No. 717,829
Int. Cl.² C10G *23/02*
U.S. Cl. 208—264 **10 Claims**

1. A method for reactivating color removal activity of aged hydrofinishing catalyst which comprises contacting said catalyst with from about 0.05 to about 2 weight percent of added elemental sulfur dissolved in hydrocarbon oil for from about 2 to about 48 hours while maintaining method conditions at a temperature of from about 80° C to about 200° C, a pressure of from about 100 psig to about 300 psig, a liquid hourly space velocity of from about 0.1 hr^{-1} to about 10 hr^{-1} and a hydrogen circulation rate of from about 100 scf/bbl to about 1500 scf/bbl.

4,062,764
METHOD FOR NEUTRALIZING ACIDIC COMPONENTS IN PETROLEUM REFINING UNITS USING AN ALKOXYALKYLAMINE
James A. White, Richmond, and Thomas C. Maynard, Houston, both of Tex., assignors to Nalco Chemical Company, Oak Brook, Ill.
Filed July 28, 1976, Ser. No. 709,347
Int. Cl.² C10G *7/00;* **C23F** *11/04, 11/14*
U.S. Cl. 208—348 **20 Claims**

1. A process for neutralizing the acidic components in the initial condensate of a distilling petroleum product in a refining unit which comprises: adding a neutralizing amount of a compound having the formula, $R—O—(CH_2)_n NH_2$ wherein n is 2 or 3 and R is a lower alkyl radical of not more than 4 carbon atoms to said petroleum product as it passes through the refining unit.

4,062,765
APPARATUS AND PROCESS FOR THE SEPARATION OF PARTICLES OF DIFFERENT DENSITY WITH MAGNETIC FLUIDS
Homer Fay, Katonah; Jean Marie Quets, and Henri Hatwell, both of White Plains, all of N.Y., assignors to Union Carbide Corporation, New York, N.Y.
Filed Dec. 29, 1975, Ser. No. 645,016
Int. Cl.² B03B *5/30*
U.S. Cl. 209—1 **10 Claims**

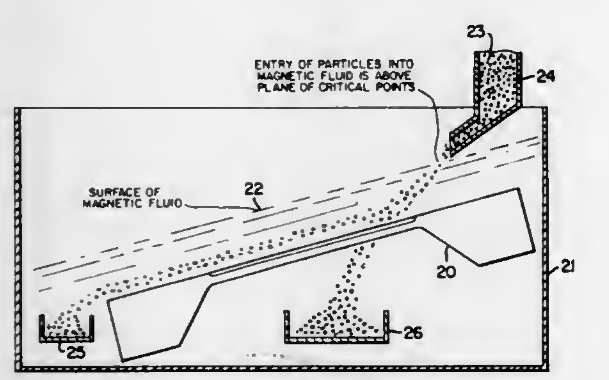

1. Process for separating non-magnetic particles on the basis of their different densities which comprises providing a magnetic fluid comprising a colloidal suspension of superparamagnetic material in a liquid medium; generating in said magnetic fluid a non-uniform magnetic field gradient, said gradient producing in said magnetic fluid a vertical force component in the direction opposite to gravity, said vertical force component decreasing in magnitude in the direction opposite to gravity and having critical points below which the contours of constant force thereof are discontinuous and above which said contours of constant force are continuous; introducing into said magnetic fluid having the said non-uniform magnetic field gradient generated therein a mixture of at least two solid non-magnetic particles having densities which are different and greater than the actual density of the magnetic fluid, the level of introduction of said particle mixture being not lower than the said critical points in said fluid, whereby the particles segregate themselves in different zones of said magnetic fluid; and recovering at least some of the thus segregated particles.

4,062,766
CENTRIFUGAL SEPARATOR
Clarence Lehi Duesling, Port Elgin, Canada, assignor to Canarco Incorporated, Port Elgin, Canada
Filed Nov. 23, 1976, Ser. No. 744,340
Claims priority, application Canada, Aug. 31, 1976, 260246
Int. Cl.² B04C *5/181*
U.S. Cl. 209—211 **3 Claims**

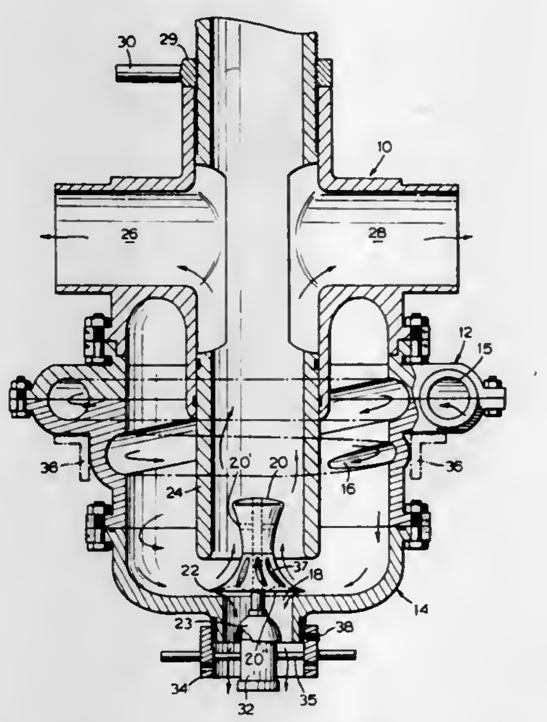

1. In a fluid medium centrifugal separator
a concentrator bowl having a side wall and a bottom wall that slopes downwardly and inwardly;
said bottom wall being formed with a central concentrate discharge port;
a medium feed injector having a passage with a discharge opening to continuously direct fluid passed therethrough at a high velocity in a spiral path of decreasing radius over the bottom of said bowl that terminates at said discharge port;
a splitter in said bowl overlying said discharge port, said splitter having an upper surface and a lower surface,
said upper surface of said splitter merging with said lower surface of said splitter to form a continuous splitting edge of said splitter,
said splitting edge of said splitter overlying and having a diameter greater than the diameter of said discharge port to divide material flowing over said bottom of said concentrating bowl in a spiral path as aforesaid into split paths one split portion flowing through said discharge port of said concentrating bowl and the other split portion flowing over said upper surface of said splitter and upwardly of the central portion of said concentrating bowl;
a vortex tube in said concentrating bowl overlying said splitter with its input end overlying said splitter to receive the portion of material split by said splitter that is directed upwardly in said bowl;
said vortex tube having a discharge outlet for materials directed thereinto as aforesaid;
the improvement of a rotatable mounting means for said splitter to permit said splitter to rotate about the vertical axis of said bowl in use, said splitter being rotatably mounted on its mounting means, and means for rotating said splitter in use.

4,062,767
MATERIAL HANDLING SYSTEM
Samuel Rudy, Tucson, Ariz., assignor to Occidental Research Corporation, Los Angeles, Calif.
Continuation-in-part of Ser. No. 587,274, June 16, 1975, abandoned. This application Sept. 30, 1976, Ser. No. 728,220
Int. Cl.² B03C *1/02*
U.S. Cl. 209—212 **6 Claims**

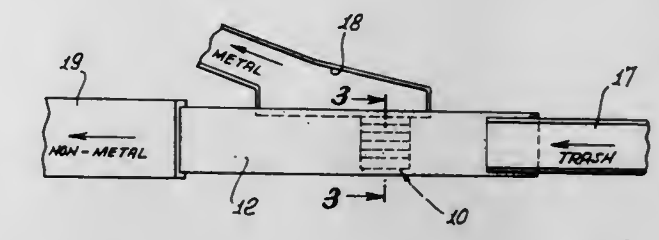

1. In a system for handling mixtures having electrical conducting components, the combination of:
a linear polyphase induction motor having a core with a face and a plurality of coils in substantially parallel slots defining a motor axis perpendicular to said slots, with said coils connected in groups with a group for each phase;
circuit means for connecting said coil groups to a polyphase AC source for continuous excitation of said motor;
a plurality of capacitors, with a capacitor for each phase and connected in circuit with said groups of coils to provide a resonant circuit; and
means for moving a mixture having random electrical conducting components across said motor face along a path not aligned with said motor axis, so that said random components are moved out of the mixture in the direction of said motor axis by coupling of said components to the motor magnetic field, and including
a conveyor with an electrical non-conducting sheet moving across the face of said motor along said path, with the motor being only intermittently loaded by the random coupling of said conducting components,
first means for depositing material on said conveyor upstream of said motor,
second means for receiving material from said conveyor down stream of said motor, and
third means for receiving conducting components at one side of said conveyor,
with said motor on one side only of said conveyor sheet.

4,062,768
SIEVING OF MATERIALS
Jack Elliot, Leeds, England, assignor to Locker Industries Limited, Great Britain
Continuation-in-part of Ser. No. 413,767, Nov. 8, 1973, abandoned. This application Aug. 26, 1975, Ser. No. 607,942
Claims priority, application United Kingdom, Nov. 14, 1972, 52562/72
Int. Cl.² B07B *1/30*
U.S. Cl. 209—341 **9 Claims**

1. Sieving apparatus comprising a sieve carrier, means for imparting longitudinal vibratory movement to the sieve carrier said movement having substantially no vertical component, a sieving medium, a sieve frame to which said sieving medium is secured and supporting said sieving medium at an inclination of not more than 5° to the horizontal, resilient means interposed between the sieve frame and the sieve carrier to support said

sieve frame in said sieve carrier, an ultrasonic generator mounted on said sieve carrier and separate from said means for imparting vibratory motion, and coupling means coupling the

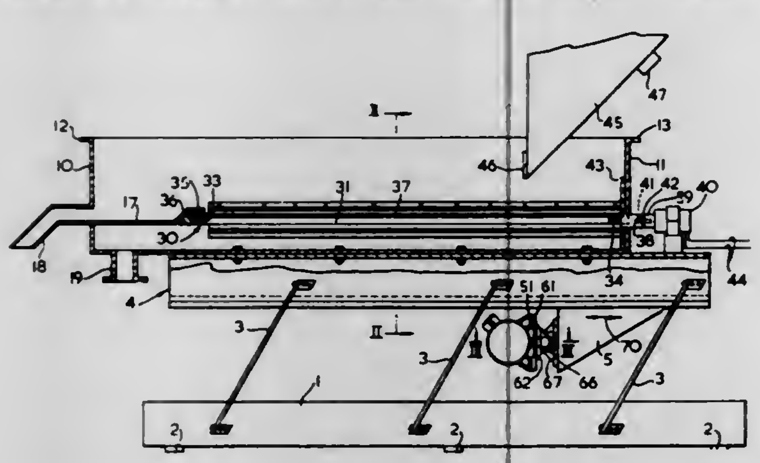

output from said ultrasonic generator to said sieve frame, in a direction substantially parallel to the plane of the sieving medium.

4,062,769

ELASTOMER SCREEN UNITS FOR SHAKER-SCREEN BODIES

Gordon Leon Simonson, Frederic, Wis., assignor to Durex Products, Inc., Luck, Wis.

Continuation-in-part of Ser. No. 534,585, Dec. 19, 1974, Pat. No. 3,943,054. This application Nov. 20, 1975, Ser. No. 633,947

Int. Cl.^{2} B07B *1/46*

U.S. Cl. 209—399 **5 Claims**

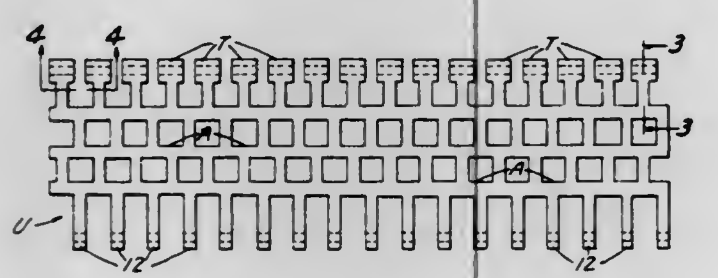

1. In combination with a plurality of generally parallel rod-like supporting members spaced a predetermined distance apart, a multiplicity of individual screen units adapted to be interconnected to form a complete sorting screen with a flush sorting surface for sizing and sifting of hard fragmented material discharged thereon and flowed thereover in a predetermined flow direction:

each of said screen units comprising:

a generally rectangular body constructed of elastomer material, having first and second edges and upper and lower surfaces extending between said edges, and having a multiplicity of sorting apertures passing through said body from said upper surface to said lower surface;

each of said first and second edges being oriented transversely to said flow direction and each of said first and second edges including a plurality of transversely spaced apart elements projecting outwardly from said body and parallel to the flow direction with the transverse distance of separation between elements of said first edge being greater than between elements on said second edge, the arrangement of said elements at said second edge being complemental to that of said first edge, whereby in interconnection of two units along the flow direction the said projecting elements of a said first edge and a said second edge will be interposed in close side-by-side relation;

said plurality of projecting elements along said first and said second edges having transversely aligned bores therethrough for reception of one of said rod-like supporting members therethrough; and

the distance between said bores of said first edge and said second edge of each unit being equal to the distance between two of said spaced apart rod-like supporting members and said bores being equally spaced from said upper surface, whereby a multiplicity of said units is interconnected and supported by said rod-like members to define said flush sorting surface.

4,062,770

METHOD OF AND APPARATUS FOR DIGESTING ORGANIC WASTE AND/OR SEWAGE SLUDGE

Franz Xaver Kneer, Hanau-Mittlebuchen, Germany, assignor to Gebruder Weiss K.G., Dillenburg, Germany

Filed July 28, 1976, Ser. No. 709,378

Claims priority, application Germany, Sept. 15, 1975, 2541070

Int. Cl.^{2} C02C *1/12;* **C05F** *9/02*

U.S. Cl. 210—12 **11 Claims**

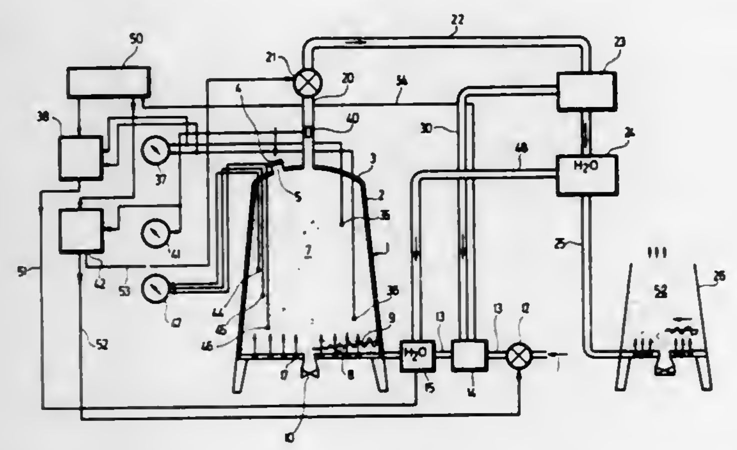

1. An improved method of continuously digesting material such as organic waste and/or sewage sludge, including the steps of feeding the material to be digested into the upper end of an enclosed space, withdrawing the material after being digested from the lower end of the enclosed space, aerating the material as it moves downwardly from the upper end to the lower end of the enclosed space, and adjustably supplying the air to the material as a function of values measured within the enclosed space, wherein the improvement comprises the steps of allowing the material to pass from the upper end of the enclosed space to the lower end thereof in a continuous body forming a single mass, finely distributing the total amount of air required for the digestion process of the material over the entire cross-sectional area of the lower end of the enclosed space so that the air supplied thereto contacts the entire cross-sectional area of the mass of material taken transverse to its direction of movement through the space as the air flows through said mass of material, in a direction opposite to the movement of the material through said enclosed space, adding a regulated amount of moisture to the air introduced into the enclosed space, withdrawing the air from the upper end of the enclosed space after its upward flow through the material, monitoring one of the CO_2 and O_2 content of the air withdrawn from the upper end of the closed space, comparing the actual value of the one of the CO_2 and O_2 content monitored with a predetermined desired value, regulating the flow of the air through the enclosed space based on the comparison of the desired and monitored values by separately controlling the introduction of air into the enclosed space and controlling the withdrawl of air therefrom thereby controlling pressure gradients in the various layers of said mass so as to adjust the oxygen level flowing through said mass in desired amounts, measuring the moisture content of the material in at least two locations spaced apart in the direction between the lower end and the upper end of the closed space, comparing the actual moisture content values with predetermined desired values, regulating the amount of finely divided water added into the air being supplied to the lower end of the enclosed space based on the comparison of the desired and measured values of moisture content, and heating the air supplied to the lower end of the enclosed space to a temperature in the range of 30° to 50° C.

8. An apparatus for digesting material such as organic waste and/or sewage sludge comprising an enclosed vertically extending reaction vessel, a material inlet at an upper end of said reaction vessel and a material outlet at a lower end therof so that said material progresses in a continuous body forming a single mass from said inlet to said outlet, a distributor in the lower end of said reaction vessel for finely distributing a flow of air into the entire horizontal cross-sectional area of said reaction vessel, a blower and a conduit extending from said blower to said distributor for supplying air to said distributor, a suction device and an exhaust line connecting said suction device and the upper end of said reaction vessel for withdrawing air from within the upper end of said reaction vessel so that said air is caused to flow through said mass in a direction opposite to the movement of said material through said vessel, a first control circuit connected to said blower and suction device for separately regulating said blower and said suction device so as to cause said air flow to traverse the entire height and over the full cross-section of said continuous mass, said first control circuit including means for measuring one of the CO_2 and O_2 values in the air withdrawn from said reaction vessel so that based on a comparison of the actually measured values of the CO_2 or O_2 and a predetermined desired value at least one of the amount of air supplied to said blower and withdrawn by said suction device can be regulated, a spraying device for adding finely divided water into the air flow in said conduit between said blower and said distributor so as to moisturize the air supplied to said distributor, a second control circuit connected to said spraying device for regulating the amount of water supplied into the air, a heating device connected to said conduit for heating the air being supplied to said distributor, and a third control circuit connected to said heating device for regulating the amount of heat supplied to the air flowing from said blower to said distributor, and means connected to said first, second and third control circuits for determining desired degree of regulation effected by said circuits based on predetermined desired values as compared to actually measured values in said vessel.

4,062,771

APPARATUS AND PROCESS FOR MEMBRANE FILTRATION

Wolfram Saupe, Konigsstein, Germany, assignor to Hoechst Aktiengesellschaft, Frankfurt am Main, Germany

Filed June 9, 1976, Ser. No. 694,345

Claims priority, application Germany, June 11, 1975, 2525972

Int. Cl.^{2} B01D *31/00*

U.S. Cl. 210—23 F **44 Claims**

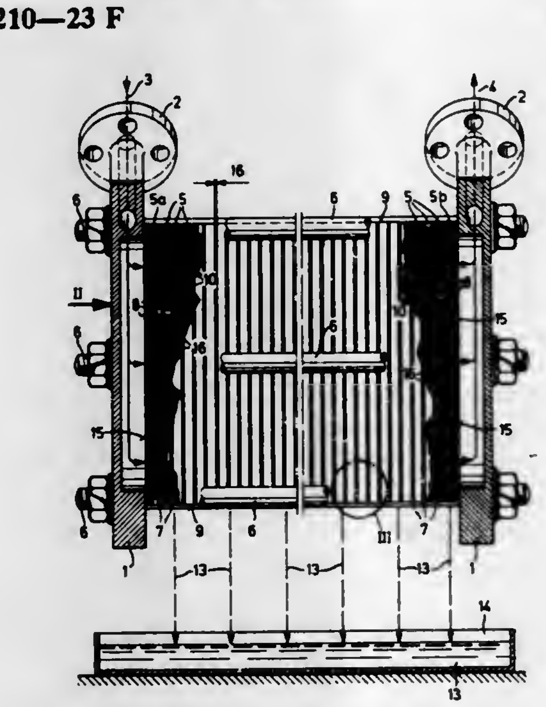

1. An apparatus for carrying out membrane filtration of a liquid, which comprises:

a. at least two disc-shaped support members including a first and a last support member of porous material arranged in series and including an open space axially therebetween, each support member having a diameter which is large in relation to its thickness and including a plurality of liquid flow passageways therethrough wherein the liquid flow passageways of each support member are displaced with respect to those in each adjacent support member;

b. inlet means for admitting a liquid to be filtered to the first support member;

c. outlet means for withdrawing a concentrate from the last support member whereby liquid flow from said inlet means to said outlet means is possible;

d. a semipermeable membrane covering all surfaces of said support members in contact with the liquid, including the surfaces of said passageways and the axial end surfaces of said support members;

e. means for providing that flow of liquid from one support means to the next is only via the passageways; and

f. means associated with each support member for withdrawing permeate therewithin.

43. A process for the membrane filtration of a liquid, comprising the steps of causing a liquid to flow through an assembly comprising at least two disc-shaped support members of porous material arranged in series and including an open space axially therebetween, each support member having a diameter which is large in relation to its thickness and including a plurality of liquid flow passageways therethrough wherein the liquid flow passageways of each support member are displaced with respect to those in each adjacent support member, the liquid entering through an inlet to the first support member and flowing along a path constituted by the plurality of passageways through each support member, whereby the direction of liquid flow is caused to change in each of said spaces to achieve more effective contact with support members, every part of the surface of each support member coming into contact with the liquid being covered with a semipermeable membrane, whereby permeate gains access to the porous material of the support members, collecting the permeate from within the porous material of each support member and collecting the concentrate at an outlet from the last support member.

4,062,772

POLLUTED WATER PURIFICATION

E. O. Box, Jr., and Floyd Farha, Jr., both of Bartlesville, Okla., assignors to Phillips Petroleum Company, Bartlesville, Okla.

Filed Apr. 1, 1976, Ser. No. 672,830

The portion of the term of this patent subsequent to Dec. 14, 1993, has been disclaimed.

Int. Cl.^{2} B01J *23/16;* **C02B** *1/34*

U.S. Cl. 210—63 R **10 Claims**

1. A process for the purification of aqueous streams containing organic material impurities dissovled and suspended therein to aqueous products substantially free of organic material which comprises contacting an aqueous stream containing oxidizable organic pollutant impuritites and an oxygen-containing gas with a solid copper manganite spinel structure catalyst promoted with bismuth in which the atomic ratio of copper to manganese varies from about 0.25:1 to about 4:1 and bismuth to manganese varies from about 0.0003:1 to about 0.5:1 under oxidation conditions including a temperature and a ratio of water to oxygen sufficient to convert said organic materials to innocuous materials, thereby converting said aqueous stream to a potable aqueous product which can be safely discarded or reused.

4,062,773

HIGH SURFACE TO VOLUME STRUCTURE AND METHOD OF GENERATING SAME

Ronald J. Leonard, Harvard, Ill., assignor to Baxter Travenol Laboratories, Inc., Deerfield, Ill.

Continuation-in-part of Ser. No. 510,326, Sept. 30, 1974, abandoned. This application Sept. 2, 1975, Ser. No. 609,312

Int. Cl.^{2} B01D *29/02*

U.S. Cl. 210—65 **13 Claims**

1. A filter assembly for use in filtering biological fluids which comprises:

an expandable and contractible bellows-configurated housing having a fluid inlet and a fluid outlet;

a cylindrically-shaped, high surface area filter element positioned within and cooperatively associated with said housing to filter fluid flowing through said housing between said inlet and said outlet, said filter including an elongated

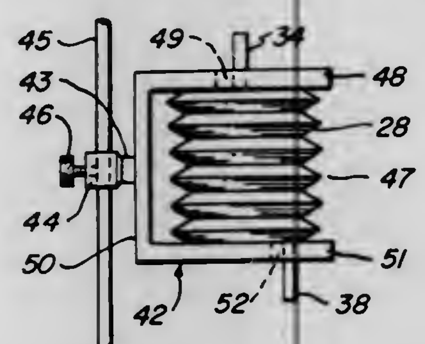

sleeve of filter material and a coil-shaped spring positioned within and engaging said sleeve for shaping said sleeve so as to provide a high surface area for filtration, said filter element being constructed and arranged so that the surface area for filtration remains substantially unchanged as the volume of the housing is changed.

4,062,774
BRAKE FLUID FILTER
Carlos R. Hinojosa, Camuy, P.R., assignor to Besendruch-Hofmann Inc., Lindenhurst, N.Y.
Filed Oct. 9, 1975, Ser. No. 621,156
Int. Cl.² B01D *35/00*
U.S. Cl. 210—94 **8 Claims**

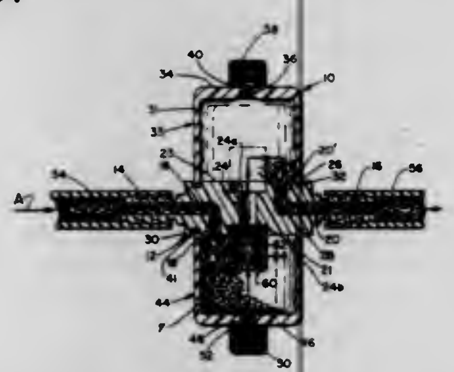

1. A filter device for filtering a brake fluid in a hydraulic brake system, comprising:

a disk shaped core having two opposite flat sides, and a cylindrical wall, with two diametrically opposed and aligned integral nipples, each of said nipples having a bore which is in flow communication with a respective diametrically aligned radial bore in said core, each of said radial bores in said core extending radially through said cylindrical wall, and having axially extending portions opening respectively at opposite sides of said core, and a central axial other bore opening at opposite ends at opposite sides of said core, each of said ends of said axial bore having an enlargement to define a recess;

said nipples further comprising means for attaching a fluid conducting pipe to each of said nipples to communicate through said cylindrical wall with said radial bores in said core respectively, for passing said fluid into and out of said core;

a cupped shaped bowl secured to each of the opposite sides of said core for containing fluid passing through said core; and

a filter element in one of said recesses communicating with said central bore for straining said fluid passing through said core.

4,062,775
METHOD AND A DEVICE FOR PROMOTING THE SEPARATION OF COMPONENTS SUSPENDED IN A LIQUID
Jacob Pielkenrood, Krommenie, Netherlands, assignor to Pielkenrood-Vinitex B. V., Assendelft, Netherlands
Filed June 2, 1975, Ser. No. 582,676
Int. Cl.² B01D *23/10, 33/30, 35/00, 37/00*
U.S. Cl. 210—189 **4 Claims**

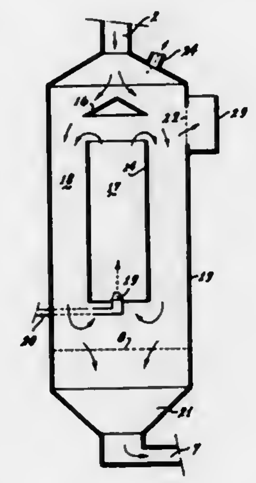

1. A device for promoting the separation of a liquid to be treated, wherein said liquid includes components suspended therein, by coalescing said components, comprising:

a substantially vertically-oriented chamber, having an inlet at its upper end for continuously admitting the liquid to be treated and a first outlet at its lower end for discharge of a more dense component and a second outlet near its upper end for discharge of a less dense component;

a plurality of minute bodies suspended in the chamber throughout the liquid, said bodies of a material which is chemically inert to the liquid;

a first grid near the bottom of said chamber above said first outlet and below said second outlet, extending across said chamber for preventing said bodies from being discharged through said first outlet;

a second grid disposed across said second outlet to prevent said bodies from being discharged through said second outlet; and

a jet mounted in the lower portion of said chamber above said first grid and below said second outlet, for discharging a compressed gas into the liquid to cause the liquid and said minute bodies to circulate together continuously within said chamber.

4,062,776
SLUDGE CONCENTRATOR AND CONDITIONER
Arie Blok, 1422 Overlea Drive, Dunedin, Fla. 33528
Filed July 7, 1976, Ser. No. 703,126
Int. Cl.² B01D *33/08*
U.S. Cl. 210—205 **5 Claims**

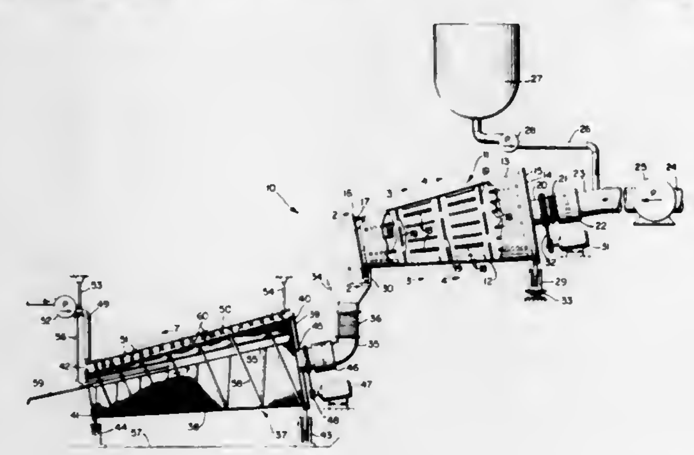

1. A sludge concentrator and conditioner comprising an imperforate conical contact chamber having a large inlet end

and a restricted open outlet end, said contact chamber including a conical wall, alternate rows of baffles and weirs mounted internally on said conical wall, said baffles extending longitudinally of said conical wall and being circumferentially spaced from one another, said weirs extending circumferentially of the conical wall and being disposed in end to end relation to one another. means rotatively supporting said contact chamber inclined downwardly from its inlet to its outlet end, means supplying sludge to said inlet end, means supplying a flocculating polymer to said inlet end, means imparting rotation to said contact chamber for mixing the sludge and polymer to create floc and filtrate and for conveying such mixture to the outlet end, a concentrator chamber comprising a conical screen drum having a large inlet end and a restricted open outlet end, said screen drum having a helical vane disposed internally for retarding movement of the mixture toward the outlet end of the concentrator chamber, means rotatively supporting said drum inclined downwardly from said inlet end to said outlet end, a conduit leading from said outlet end of the contact chamber and discharging into said inlet end of the concentrator chamber, and means imparting rotation to the concentrator chamber for conveying the floc toward the open discharge end thereof as the filtrate escapes through the screen.

4,062,777
SOLID-FLUID CONTACTING APPARATUS
Hidemasa Tsuruta, and Ryoichi Nemoto, both of Tokyo, Japan, assignors to Nittetu Chemical Engineering Ltd., Tokyo, Japan
Filed May 14, 1976, Ser. No. 686,400
Claims priority, application Japan, May 21, 1975, 50-59687
Int. Cl.² B01D *23/14*
U.S. Cl. 210—264 **14 Claims**

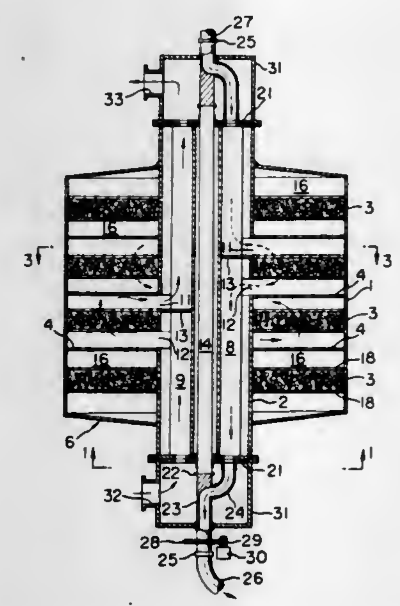

1. An apparatus for contacting a fluid with a solid material contained in a plurality of independent contacting units within the apparatus, comprising:

a. an outer generally tubular housing member;

b. an inner generally tubular housing member defining a fluid flow channel therein and being placed inside of said outer housing member and being generally coaxially aligned therewith to define a space therebetween;

c. at least one means extending radially between said inner and outer housing members for partitioning said space into a plurality of separate, axially spaced contacting zones;

d. at least one means extending axially within said inner housing member for partitioning said fluid flow channel into a plurality of fluid flow sub-channels, corresponding in number to the number of said contacting zones;

e. means within each of said contacting zones for receiving said solid; and

f. at least one fluid flow inlet and at least one fluid flow outlet, said inlets and outlets corresponding in number to the number of said contacting zones, and each of said inlets and outlets connecting a single one of said contacting zones to a single one of said sub-channels, and means positioned in each sub-channel between said inlet and outlet for preventing fluid flow through said sub-channel such that each contacting zone, and its respective sub-channel, fluid flow inlet and outlet define a contacting unit independent from other such contacting units wherein each of said sub-channels forms an exclusive supply and discharge passage for its respective contacting zone.

4,062,778
DEVICE FOR DIFFUSING MATTER BETWEEN TWO FLUIDS VIA SEMI-PERMEABLE DIAPHRAGMS
Gerhard Riede, Lund, Sweden, assignor to Gambro AG, Switzerland
Filed Aug. 23, 1976, Ser. No. 716,480
Claims priority, application Sweden, Sept. 11, 1975, 7510098
Int. Cl.² B01D *31/00*
U.S. Cl. 210—321 B **5 Claims**

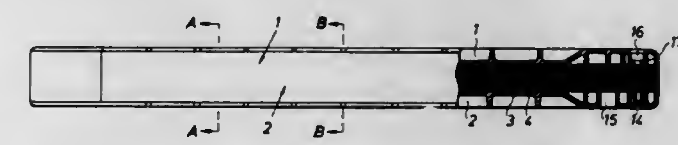

1. In an apparatus for diffusing matter between two fluids comprising a plurality of spacing plates, a plurality of pairs of semi-permeable membranes, said spacing plates including flow passages for each of said fluids, so that when said spacing plates and said pairs of semi-permeable membranes are arranged in a stacked configuration, one of said fluids may be passed between said pairs of semi-permeable membranes and said other fluid may be passed between said spacing plates and said pairs of semi-permeable membranes, a first clamping plate, a second clamping plate, and means for clamping said first clamping plate to said second clamping plate with said stacked configuration pressed therebetween, the improvement which comprises said first and second clamping plates and said spacing plates including a generally rectangular configuration and a pair of tapered end portions, said flow passages for each of said fluids being disposed at said tapered end portions, and means for clamping said first clamping plate to said second clamping plate at a plurality of locations substantially around the entire periphery of said apparatus in order to contain said stacked configuration under increased pressure therebetween, said flow passages for each of said fluids being located a distance from said means for clamping said first clamping plate to said second clamping plate which is less than half the width of said first and second clamping plates.

4,062,779
APPARATUS FOR THICKENING AND EXTRACTING THE LIQUID FROM A SLUDGE
Shoichi Nakamura, Matsudo, and Shigeaki Sasaki, Chiba, both of Japan, assignors to Ichikawa Woolen Textile Co., Ltd., Japan
Filed July 19, 1976, Ser. No. 706,610
Claims priority, application Japan, Oct. 2, 1975, 50-134075[U]
Int. Cl.² B01D *33/04*
U.S. Cl. 210—386 **2 Claims**

1. An apparatus for thickening and extracting the liquid from a sludge comprising a sludge-thickening assembly wherein solid matters in the sludge are coagulated to form coagulated flocs and the floc sludge is separated and thickened, and an assembly for extracting liquid from said floc sludge under pressure to obtain a dehydrated cake, said slugde-thickening assembly comprising coagulation means for the sludge, a first and a second screen rolls having a reticulate material covering the outer surface thereof, conduit means for communication between said coagulation means and said first screen rolls and between said first screen rolls and said second screen rolls,

means for washing the reticulate material covering the outer surface of the first and second screen rolls, said screen rolls comprising a roll body framed with a plurality of rods in a cylindrical form and a wire rod spirally wound at predetermined intervals around said roll body and said reticulate material covering said wire rod, the reticulate material covering the outer surface of the second roll being of a finer mesh than the reticulate material of the first roll, and additionally comprising a press roll on said second screen roll, said assembly for extracting the liquid comprising an endless moving flocked filter belt, the fibers which constitute the flock being slanted in a

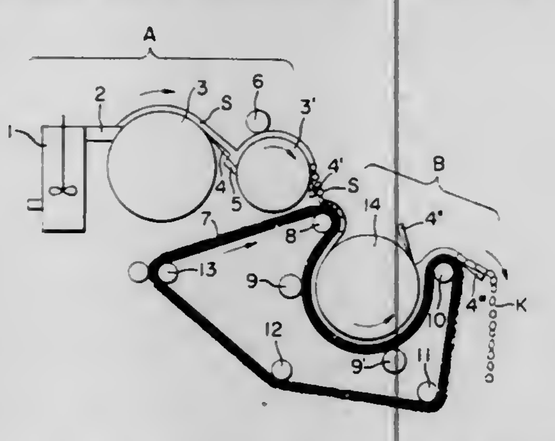

direction opposite to the direction of travel of the filter belt, means for supporting the belt, a cylinder forced to closely contact with an upper portion of said endless moving flocked filter belt and said cylinder, and means for removing the result-press portion having an inlet side, and at least one press roll urging said endless moving flocked filter belt against said cylinder, means for feeding said floc sludge formed in said sludge thickening assembly onto the flocked filter belt at the inlet side of said press portion of said extraction assembly defined by the contact zone of said endless moving flocked filter belt and said cylinder, and means for removing the resulting dehydrated cake at the outlet of said press portion.

4,062,780

VACUUM FILTER WITH INDEXABLE FILTER WEB

Mark R. Estabrook, Rockford, Ill., assignor to Barnes Drill Co., Rockford, Ill.

Filed Mar. 25, 1976, Ser. No. 670,401

Int. Cl.^{2} B01D *33/04*

U.S. Cl. 210—401 **2 Claims**

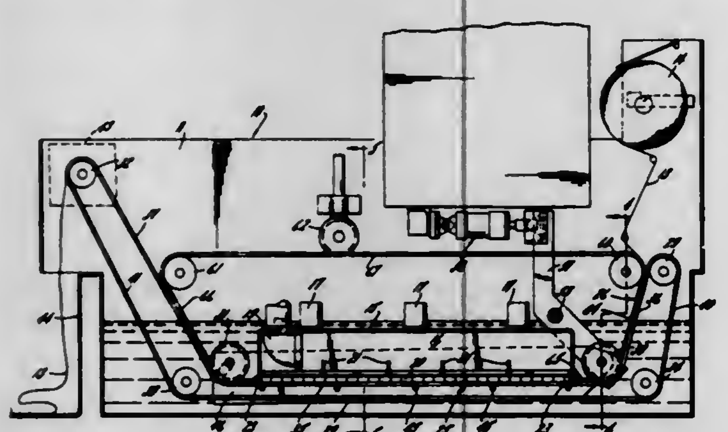

1. A vacuum filter comprising a tank adapted to be filled to an approximate level with liquid to be filtered, a rectangular box having top, side and end walls defining a vacuum chamber and having a perforate bottom wall disposed within said liquid, a supply roll of disposable filter web located above said liquid, a flexible and perforated endless conveyor wider than said chamber and located to guide said web downwardly into said liquid, beneath the underside of said bottom wall to cover the latter, and then upwardly out of the liquid, said conveyor having an upper active run comprising a horizontal portion located between first and second upright portions and further having a lower return run with portions located below and generally parallel to the portions of said active run, means for creating a vacuum in said box thereby to suck said liquid through said conveyor, said web and said bottom wall and into said box, mechanism for periodically driving said conveyor to advance a clean length of web beneath said bottom wall, a pair of flexible endless bands extending along opposite side walls of said box and positioned above the active run of said conveyor in engagement with said web to hold the side margins of the web against the upper surface of said conveyor, each of said bands having an active run comprising a horizontal portion located between first and second upright portions, the portions of the active run of each band being located adjacent to and parallel with the respective portions of the active run of said conveyor, each of said bands further comprising a return run located above the active run of the band, and means rotatably supporting and guiding said bands to enable the latter to advance with said web, the first upright portion of each band coacting with the first upright portion of said conveyor to enable initial threading of said web from said supply roll and between said bands and said conveyor.

4,062,781

DISPOSABLE FILTER WITH INTERCHANGEABLE END ELEMENTS

Richard Strauss, Lexington, and Philip C. Kimball, Andover, both of Mass., assignors to Whatman Reeve Angel Limited, Maidstone, England

Filed June 4, 1976, Ser. No. 692,993

Int. Cl.^{2} C02C *1/14*

U.S. Cl. 210—446 **11 Claims**

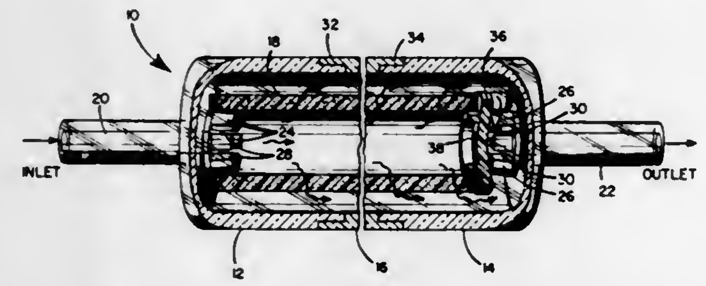

1. A disposable filter unit which comprises:
a. a self-supporting, nonwoven, bonded, glass-fiber filter tube in which compression of the peripheral ends of the filter tube provides a fluid-tight seal against a surface;
b. two substantially identical interchangeable molded plastic end elements, each element comprising
i. an interior face surface,
ii. an outer cylindrical flange extending from the interior face and adapted to form with the combination of said end elements a sealed housing to enclose the filter tube,
iii. an inner, short, cylindrical flange extending from the interior face, the outer diameter of the flange about that of or slightly less than the inner diameter of the filter tube, the flange having or defining at least one passageway therein, and
iv. a tube coaxial with the filter tube and extending into the inner flange to form a fluid-flow passage between the exterior and the interior of the end element such that a fluid may be introduced or removed from the filter unit;
c. a solid disc element having an inner and an outer face surface, the diameter of the disc element about that of or slightly greater than the outer diameter of the filter tube, and having a short cylindrical flange extending from the inner face surface, the said flange having an outer diameter about that of or slightly less than the inner diameter of the filter tube;
d. the inner flange of one of said end elements functioning as a means to center the filter tube snugly disposed within the inner diameter of the filter tube at the one end, and the flange of the disc element snugly disposed within the inner diameter of the filter tube at the other end; and
d. said end elements aligned, positioned and secured to form a sealed enclosed housing about the filter tube, with the length of the housing adapted to position the inner flange of the other of said end elements against the outer face surface of the solid disc element, and to compress the peripheral edge at the one end of the filter tube into a fluid seal against the interior face surface of said one of said end elements and the peripheral edge of the filter tube at the other end into a fluid seal against the inner face surface of the disc element, said inner flange of said other of said elements functioning as a flow-passage means,
such as to provide a simple, inexpensive integrally disposed filter unit.

10. A disposable filter unit which comprises:
a. a self-supporting, nonwoven, bonded, glass-fiber filter tube comprising a plurality of nonwoven, borosilicate glass fibers having a diameter of from about 0.03 to about 8 microns, the fibers bonded at the junctions of the fiber crossovers with a binding agent in which compression of the peripheral ends of the filter tube provides a fluid-tight seal against a surface;
b. two substantially identical interchangeable molded plastic end elements, each element comprising
i. an interior face surface,
ii. an outer cylindrical flange having peripheral edges which are flanged to permit an overlapping adhesive seal to be formed, the flange extending from the interior face and adapted to form with the combination of the said end elements a sealed housing to enclose the filter tube,
iii. an inner, short, cylindrical flange extending from the interior face and comprising a plurality of barb-like elements extending inwardly from the face surface of the end elements, and defining passages therebetween, the outer diameter of the flange about that of or slightly less than the inner diameter of the filter tube, the flange having or defining at least one passageway therein, and
iv. a tube coaxial with the filter tube and extending into the inner flange to form a fluid-flow passage between the exterior and the interior of the end element such that a fluid may be introduced or removed from the filter unit;
c. a plastic, cylindrical body element, the body element of predetermined length and positioned between and sealed to the first and second end elements to form with the end elements a sealed housing of the desired length;
d. a solid plastic disc element having an inner and an outer face surface, the diameter of the disc element about that of or slightly greater than the outer diameter of the filter tube, and having a short cylindrical flange extending from the inner face surface, the said flange having an outer diameter about that of or slightly less than the inner diameter of the filter tube;
e. the inner flange of one of said end elements functioning as a means to center the filter tube snugly disposed within the inner diameter of the filter tube at the one end, and the flange of the disc element snugly disposed within the inner diameter of the filter tube at the other end; and
f. said end elements aligned, positioned and sealed to form a sealed enclosed housing about the filter tube, with the length of the housing adapted to position the inner flange of the other of said end elements against the outer face surface of the solid disc elements, and to compress the peripheral edge at the one end of the filter tube into a fluid seal against the interior face surface of said one of said end elements and the peripheral edge of the filter tube at the other end into a fluid seal against the inner face surface of the disc element, said inner flange of said other of said elements functioning as a flow-passage means,
such as to provide a simple, inexpensive, integrally disposed filter unit.

4,062,782

REVERSE OSMOSIS MEMBRANES

Branko Kunst, Zagreb, Yugoslavia, and Srinivasa Sourirajan, Ottawa, Canada, assignors to Canadian Patents and Development Ltd, Canada

Continuation of Ser. No. 109,794, Jan. 26, 1971, abandoned. This application Dec. 3, 1975, Ser. No. 637,419

Claims priority, application Canada, Feb. 26, 1970, 075959

Int. Cl.^{2} B01D *31/00*

U.S. Cl. 210—500 M **16 Claims**

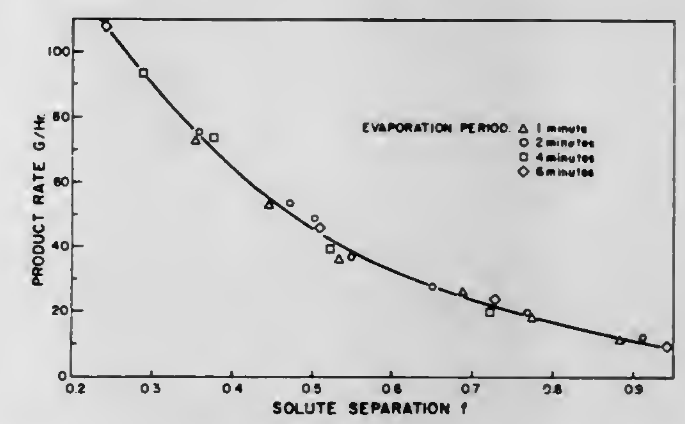

1. In the production of a porous membrane for use in the separation of solutes from solvents by reverse osmosis which comprises:
dissolving a film forming cellulosic ester or ether and a water soluble pore producing compound in a volatile organic solvent to form a casting solution,
casting said solution on a casting surface in a casting atmosphere to form a membrane of substantially uniform thickness,
evaporating a portion of said organic solvent from said cast membrane and
immersing said cast membrane in cold water to effect gelation thereof and removal of said pore producing compound therefrom,
the improvement in which said membrane is cast from a solution containing 10–20% film forming compound without forced air circulation while maintaining a casting solution temperature of 0° C or greater and a temperature differential of from 8° C to 27° C between said atmosphere and the temperature of said casting solution on said casting surface, the temperature of said atmosphere being the higher, so as to adjust the evaporation rate of the solvent from said cast membrane towards an optimum for the membrane casting solution, thereby to produce a membrane capable of allowing a higher product rate during the reverse osmotic separation at essentially the same separation factor.

16. A reverse osmosis membrane having a large number of small size pores in the surface layer produced by the method of claim 1.

4,062,783

15-ETHYNYL SUBSTITUTED PROSTANOIC ACIDS

Donald P. Strike, St. Davids, Pa., assignor to American Home Products Corporation, New York, N.Y.

Division of Ser. No. 383,007, July 26, 1973, Pat. No. 3,922,302. This application Aug. 5, 1974, Ser. No. 495,015

Int. Cl.^{2} C07C *177/00*

U.S. Cl. 260—514 D **3 Claims**

1. A compound of the formula:

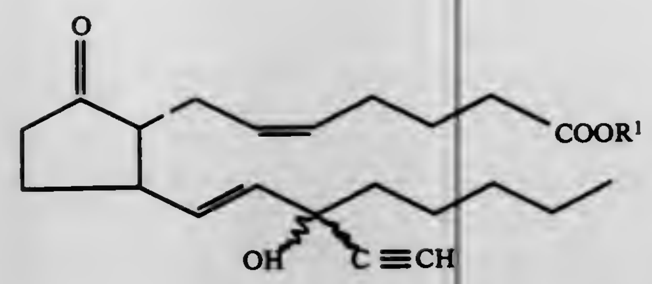

wherein R^1 is hydrogen, alkyl of from 1 to about 6 carbon atoms, alkali metal, or a pharmacologically acceptable cation derived from ammonia or a base amine.

4,062,784

OIL-IN-WATER EMULSION FOR COLD ROLLING

Rudolf Baur, Kreuzlingen, Switzerland, assignor to Swiss Aluminium Ltd., Chippis, Switzerland

Filed Aug. 2, 1976, Ser. No. 710,682

Claims priority, application Switzerland, Aug. 5, 1975, 10224/75

Int. Cl.² C10M *1/24, 3/18;* **B21B** *45/02*

U.S. Cl. 252—49.5 **13 Claims**

1. An oil-in-water emulsion suitable for the cold rolling of light metals, which comprises from about 1 to about 5% by weight alkyl monocarboxylic acid ester capable of forming a reaction layer during the rolling deformation of said metals from about 0.5 to about 7% by weight polybutene, from about 0.5 to about 2% by weight polyethoxylated sorbitan oleate, from about 0.5 to about 2.5% by weight unsaturated long-chain alkyl monocarboxylic acid capable of inhibiting hydrogen evolution and from about 0.1 to about 2.5% by weight of hexamethylenetetramine in the oil phase, in deionized water.

4,062,785

FOOD-COMPATIBLE LUBRICANT

Roger Keith Nibert, Hoffman Estates, Ill., assignor to Borg-Warner Corporation, Chicago, Ill.

Filed Feb. 23, 1976, Ser. No. 660,558

Int. Cl.² C01M *1/10*

U.S. Cl. 252—49.6 **8 Claims**

1. A food-grade lubricant comprising a major proportion of white mineral oil and a minor proportion, sufficient to enhance the lubricity of said lubricant, of a fatty carboxamide having the formula $RCONH_2$ where R has 11–17 carbon atoms.

7. A food-grade lubricant comprising a major proportion of white mineral oil, minor proportions, sufficient to enhance the lubricity of said lubricant, of each of a fatty carboxamide having the formula $RCONH_2$ where R has 11–17 carbon atoms and lard oil, from about 0.1 to about 1.0% of an alkyl phenol and a foam inhibiting amount of polydimethylsilicone.

4,062,786

LACTONE OXAZOLINES AS OLEAGINOUS ADDITIVES

Stanley J. Brois, Westfield, and Antonio Gutierrez, Hamilton Square, both of N.J., assignors to Exxon Research and Engineering Company, Linden, N.J.

Filed Sept. 24, 1976, Ser. No. 726,206

Int. Cl.² C10M *1/32, 3/26;* **C07D** *263/10;* **C08F** *8/32*

U.S. Cl. 252—51.5 R **8 Claims**

1. A lactone oxazoline reaction product obtained from heating together an equimolar mixture of a hydrocarbon-substituted lactone acid material selected from the group consisting of acids, amides and esters, and a 2,2-disubstituted-2-amino-1-alkanol having 1 to 3 hydroxy groups and containing a total of 4 to 8 carbons at a temperature of from 100°-240° C. until infra-red absorption for oxazoline is maximal indicating completion of the oxazoline reaction.

4,062,787

N-SUBSTITUTED ACRYLAMIDINES, COPOLYMERS OF N-SUBSTITUTED ACRYLAMIDINES AND ESTERS OF ACRYLIC AND METHACRYLIC ACID AND USES OF THE COPOLYMERS

Yannick Jolivet, Le Havre, and Christian Lachevre, Saint Mande, both of France, assignors to Compagnie Francaise de Raffinage, Paris, France

Filed Oct. 4, 1976, Ser. No. 729,139

Claims priority, application France, Oct. 6, 1975, 75.30537

Int. Cl.² C10M *1/32*

U.S. Cl. 252—51.5 A **4 Claims**

1. A composition comprising a major proportion of a lubricating oil and 0.5 to 10% by weight of a copolymer of at least one ester selected from the group consisting of acrylic and methacrylic esters of a saturated alcohol having 1–20 carbon atoms and at least one N-substituted acrylamidine having the formula:

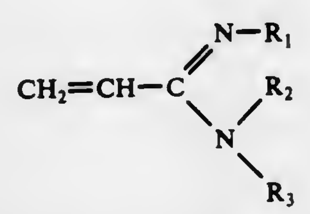

in which R_1 is selected from the group consisting of branched alkyl, and R_2 and R_3 each can contain up to 18 atoms of carbon and is selected from the group consisting of hydrogen, alkyl, alkenyl, aryl, alkaryl, aralkyl, cycloalkyl, cycloalkenyl, bicycloalkyl, haloalkyl, haloaryl, haloalkyaryl, pyridyl, hydroxyalkyl, and hydroxyaryl, the said copolymer containing from 0.1 to 99.9% and from 99.9 to 0.1% by weight of the two monomers.

4,062,788

LUBRICATING COMPOSITIONS CONTAINING A DI(CHLOROPHENYL) ESTER OF AN ALIPHATIC DICARBOXYLIC ACID

Hendrik Schadenberg, Amsterdam, Netherlands, assignor to Shell Oil Company, Houston, Tex.

Filed Aug. 16, 1976, Ser. No. 714,552

Claims priority, application United Kingdom, Sept. 5, 1975, 36627/75

Int. Cl.² C10M *1/30, 3/24, 5/18*

U.S. Cl. 252—54.6 **6 Claims**

1. A lubricating composition comprising a lubricating base oil and an amount between 0.01 and 10%wt of a di(chlorophenyl)ester of an aliphatic dicarboxylic acid containing from 2 to 15 carbon atoms, which acid contains in addition to the two carboxylic acid groups only carbon and hydrogen groups.

4,062,789

LIQUID DEVELOPER FOR ELECTROPHOTOGRAPHY

Tasuo Tamai; Sadao Osawa; Hajime Miyatuka, and Masaya Yamamoto, all of Minami-ashigara, Japan, assignors to Fuji Photo Film Co., Ltd., Minami-ashigara, Japan

Continuation-in-part of Ser. No. 188,592, Oct. 12, 1971, abandoned. This application May 1, 1974, Ser. No. 465,945

Claims priority, application Japan, Oct. 12, 1970, 45-88778

Int. Cl.² G03G *9/12*

U.S. Cl. 252—62.1 L **17 Claims**

1. A liquid developer for use in electrophotographic processes consisting essentially of:

1. a carrier liquid having a specific resistance of more than about $10^{11}\Omega$ cm selected from the group consisting of cyclohexane, decalin, kerosene, isoparaffinic hydrocarbon solvents, light oil, gasoline, chlorofluorinated hydrocarbon solvents and silicon oil,
2. from about 0.0003 to about 0.5 parts by weight per 1000 parts by weight of said carrier liquid of a copolymer of a half alkylamide of maleic acid and diisobutylene, the molar ratio of said half alkylamide of maleic acid to said diisobutylene in said copolymer being in the range of from about 1:1 to about 1:5 and said copolymer having from about 4 to about 50 monomer units in the copolymer chain, and
3. from about 0.05 to about 50 parts by f weight per 1000 parts by weight of said carrier liquid of positively charged toner particles having an average particle size of less than about 5 microns.

4,062,790

PIEZOELECTRIC CERAMIC COMPOSITIONS

Masamitsu Nishida, Osaka, and Hiromu Ouchi, Toyonaka, both of Japan, assignors to Matsushita Electric Industrial Co., Ltd., Japan

Continuation-in-part of Ser. No. 222,641, Feb. 1, 1972, abandoned. This application Aug. 24, 1973, Ser. No. 391,483

Claims priority, application Japan, Feb. 8, 1971, 46-5478

Int. Cl.² C04B *35/46, 35/48*

U.S. Cl. 252—62.9 **2 Claims**

1. A piezoelectric ceramic composition consisting essentially of a material represented by the formula:

$$Pb(Zn_{1/3}Nb_{2/3})_{0.06}(Mn_{1/3}Nb_{2/3})_{0.06}Ti_{0.44}Zr_{0.44}O_3.$$

4,062,791

ELECTRICAL INSULATING OIL

Midori Masunaga, Tokyo; Yoshiki Kohno, Kawasaki, and Kohji Hayashi, Yokohama, all of Japan, assignors to Nippon Oil Co., Ltd., Tokyo, Japan

Filed July 23, 1976, Ser. No. 708,153

Claims priority, application Japan, July 30, 1975, 50-91949; Feb. 14, 1976, 51-14421

Int. Cl.² H01B *3/22*

U.S. Cl. 252—63 **17 Claims**

1. An electrical insulating oil consisting essentially of

(A) 5 - 90% by weight of a refined oil (I) containing not more than 0.25 wt.% of sulphur, the refined oil (I) being prepared by the steps of:

refining with a solvent capable of selectively dissolving aromatic compounds a distillate containing at least 80 wt.% of a fraction having a boiling range of 230° - 430° C at atmospheric pressure obtained by the distillation of a paraffin or mixed base crude oil at atmospheric pressure or the distillation at a reduced pressure of a bottom oil obtained by the distillation of the crude oil at atmospheric pressure thereby to obtain a raffinate from said distillate,

hydrofining the raffinate so obtained, and

dewaxing the thus hydrofined raffinate with a solvent, (B) 1 - 20% by weight of a refined oil (II) prepared by treating at least with a solid absorbent a lubricating oil fraction containing at least 80 wt.% of a mineral oil having a boiling range of 230° - 460° C at atmospheric pressure obtained from a crude oil and (C) 5 - 90% by weight of at least one arylalkane (III), the three components (I) - (III) being mixed together in such amounts that the mixture has a total sulphur content of not more than 0.35 wt.%, thereby to obtain the electrical insulating oil having excellent oxidation stability, thermal stability, corona resistance and corrosion resistance.

4,062,792

SOAP CAKE CONSTRUCTION AND MANUFACTURE

Charles L. McNabb, 1347 W. Chase, Chicago, Ill. 60626

Filed May 27, 1976, Ser. No. 690,563

Int. Cl.² C11D *17/04, 13/14*

U.S. Cl. 252—93 **6 Claims**

1. A soap cake comprising:

a pair of soap segments;

a substantially planar support plate fixed between said soap segments;

said support plate having an opening formed therein and said soap segments being fused together and integrated through said opening;

said support plate being of substantially the same configuration but larger dimension than said soap segments to provide a fixed dimension perimetric flange extending outwardly from said soap segments; and

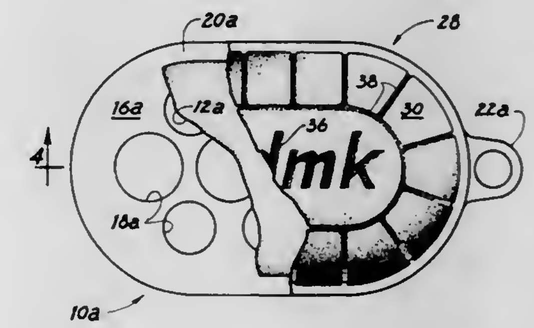

an elastic, porous cover connected to said flange and encasing said soap segments in permanently sealed relationship;

said cover being stretched over the soap segments whereby the same retains a substantially close, contouraccommodating relationship as the latter reduce in size during use.

4,062,793

CLEANING AGENTS FOR DENTURES

Christian Schödel, Mainz-Marienborn, Germany, assignor to Blendax-Werke R. Schneider GmbH & Co., Mainz, Germany

Continuation of Ser. No. 541,012, Jan. 14, 1975, abandoned. This application Sept. 16, 1976, Ser. No. 723,891

Int. Cl.² C11D *7/56, 7/38*

U.S. Cl. 252—99 **4 Claims**

1. A cleaning composition for dentures consisting essentially of from about 10 to about 50 percent by weight of an oxygen-releasing agent, about 5 to about 40 percent by weight of a complexing agent and from about 0.05 to about 25 percent by weight of at least one member selected from the group consisting of 1,6-di-(4-chlorophenyldiguanido)-hexane, 1,6-di-(2-ethylhexyldiguanido)-hexane, 1,6-di-(4-chlorobenzyldiguanido)-hexane and the water soluble salts thereof.

4,062,794

AZEOTROPE-LIKE COMPOSITIONS OF TRICHLOROTRIFLUOROETHANE, METHANOL, ETHANOL, ISOPROPANOL AND NITROMETHANE

Francis J. Figiel, Boonton, N.J., assignor to Allied Chemical Corporation, Morris Township, N.J.

Continuation-in-part of Ser. No. 638,235, Dec. 8, 1975, abandoned. This application Nov. 16, 1976, Ser. No. 741,635

Int. Cl.² C11D *7/50, 7/32, 7/30;* **C23G** *5/02*

U.S. Cl. 252—171 **4 Claims**

1. Azeotrope-like compositions comprising about 94.0 weight percent 1,1,2-trichloro-1,2,2-trifluoroethane, about 3.1 weight percent methanol, about 1.3 weight percent ethanol, about 0.4 weight percent isopropanol and about 1.2 weight percent nitromethane.

4,062,795
AZEOTROPES OF 1,2-DICHLORO-1,1,2-TRIFLUOROETHANE
William Milton Hutchinson, deceased, late of Bartlesville, Okla. (by Florence M. Hutchinson, executrix), assignor to Phillips Petroleum Company, Bartlesville, Okla.
Division of Ser. No. 690,808, May 7, 1976, Pat. No. 4,032,467, which is a division of Ser. No. 610,812, Sept. 5, 1975, Pat. No. 4,002,573, which is a division of Ser. No. 396,814, Sept. 13, 1973, Pat. No. 3,940,342. This application Jan. 21, 1977, Ser. No. 761,088
Int. Cl.² C11D *7/50;* **C23G** *5/02;* **C11D** *7/30*
U.S. Cl. 252—171 **4 Claims**

1. A substantially constant boiling admixture of (A) 1,2-dichloro-1,1,2-trifluoroethane, (B) 1,2-dibromo-1,1,2,2-tetrafluoroethane and (C) diethyl ether, which at substantially atmospheric pressure is characterized as about 53-54 weight percent 1,2-dichloro-1,1,2-trifluoroethane, about 11-12 weight percent 1,2-dibromo-1,1,2,2-tetrafluoroethane, and about 35-36 weight percent diethyl ether.

4,062,796
METHODS FOR INHIBITING SCALE FORMATION
Tommy R. Gardner, and Robert W. Lansford, both of Duncan, Okla., assignors to Halliburton Company, Duncan, Okla.
Division of Ser. No. 423,638, Dec. 10, 1973, abandoned, which is a division of Ser. No. 218,597, Jan. 17, 1972, Pat. No. 3,832,302. This application Jan. 26, 1976, Ser. No. 660,292
Int. Cl.² C02B *5/06*
U.S. Cl. 252—180 **5 Claims**

1. A liquid additive for inhibiting the precipitation of scale forming compounds from aqueous solutions consisting essentially of a mixture of a homopolymer of acrylic acid wherein about 70% of the active hydrogen ions are replaced by sodium ions, said polymer having an average molecular weight in the range of from about 1,000 to about 10,000, and a water-soluble organic cationic surface active compound selected from the group consisting of:

a primary alkylamine acetate having the following formula

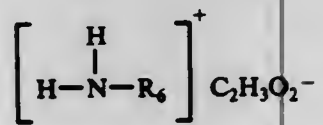

wherein R_6 represents an alkyl radical having from 8 to 18 carbon atoms,

a quaternary ammonium compound having the following formula

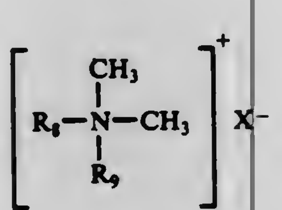

wherein R_8 represents hydrogen or an alkyl radical having from 1 to 20 carbon atoms, R_9 represents a benzyl radical and X represents a halide, and

mixtures of said compounds wherein said water-soluble organic cationic surface active compound is present in said additive in an amount substantially equal to the neutralization equivalent of said acrylic acid polymer.

4,062,797
STABILIZED ACCELERATOR COMPOSITIONS
Rudolf Adolf Behrens, Gladstone, N.J., assignor to American Cyanamid Company, Stamford, Conn.
Continuation-in-part of Ser. No. 606,266, Aug. 20, 1975, abandoned, which is a continuation of Ser. No. 430,865, Jan. 4, 1974, abandoned. This application May 26, 1976, Ser. No. 690,128
Int. Cl.² C09K *3/00*
U.S. Cl. 252—182 **21 Claims**

1. A stabilized accelerator composition for rubber comprising (a) a primary accelerator compound represented by Formula (I):

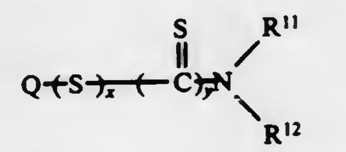

wherein Q represents a benzothiazyl or morpholinyl radical; R^{11} and R^{12} are, individually, selected from hydrogen, alkyl, cycloalkyl or taken together with the nitrogen atom, combine to form a 5- or 6- membered heterocyclic ring; x is 1 or 2 and y is 0 or 1, provided that when x is 2, y is 0; (b) a thiuram sulfide and (c) an effective stabilizing amount of a compound selected from the group consisting of (1) polyacrylic acid, (2) carboxylic acids represented by Formula (II):

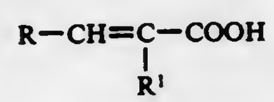

wherein R represents hydrogen, methyl, phenyl or a -COOH group and R^1 is hydrogen or methyl; (3) amides represented by the Formula (III):

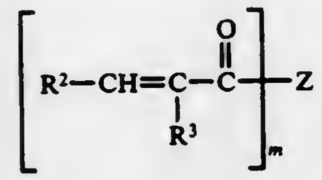

wherein R^2 and R^3 are, individually, hydrogen or methyl, m is an integer from 1-3, inclusive, and Z is selected from NH_2, $-NHR^4$, $-N(R^5)_2$, $-(NH)_2R^6$, $-(NHCH_2O)_2R^7$ or

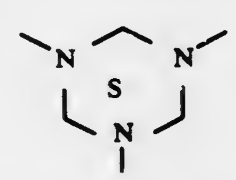

wherein R^4 and R^5 are, alkyl, alkoxyalkyl or hydroxymethyl, R^6 and R^7 are, alkylene, arylene or oxydialkylene and (4) esters represented by the Formula (IV):

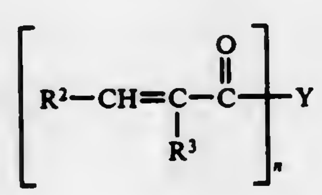

wherein R^2 and R^3 are as defined above, n is an integer from 1-4, inclusive, provided that when n is 1, Y is OR^8 wherein R^8 is alkyl or alkoxyalkyl; when n is 2, Y is $—OR^9O—$ wherein R^9 is alkylene or oxydialkylene; when n is 3, Y is

wherein R^{10} is alkylene; and when n is 4, Y is

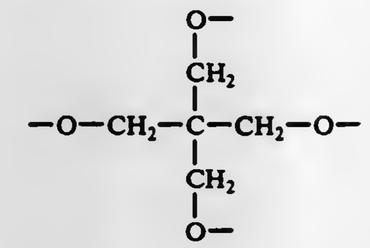

4,062,798
PHENYLPYRIMIDINE DERIVATIVES
Arthur Boller, Binningen; Marco Cereghetti, Basel, and Hanspeter Scherrer, Therwil, all of Switzerland, assignors to Hoffmann-La Roche Inc., Nutley, N.J.
Filed Aug. 30, 1976, Ser. No. 719,018
Claims priority, application Switzerland, Sept. 19, 1975, 12235/75; Jan. 9, 1976, 221/76; Feb. 25, 1976, 2317/76; July 30, 1976, 9761/76
Int. Cl.² C09K *3/34;* **C02F** *1/13;* **C07D** *239/26, 239/34, 239/48*
U.S. Cl. 252—299 **49 Claims**

1. A compound of the formula

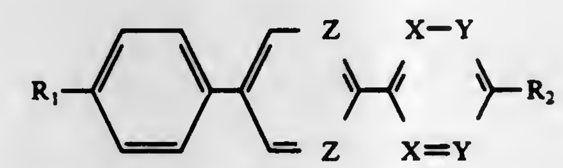

wherein when X is nitrogen, Y and Z are —CH—; or when Y is nitrogen, X and Z are —CH—; or when Z is nitrogen, X and Y are —CH—; and one of R_1 and R_2 is cyano and the other is straight-chain alkyl of 1 to 7 carbon atoms, straight-chain alkoxy of 1 to 7 carbon atoms or straight-chain alkanoyloxy of 2 to 7 carbon atoms.

32. A nematic composition for electro-optical display cells, which comprises one or more compounds of the formula

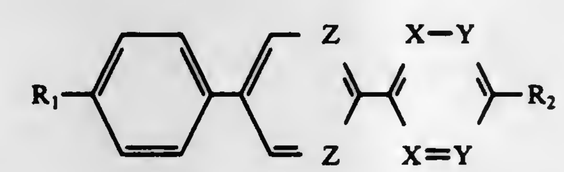

wherein when X is nitrogen, Y and Z are —CH—; or when Y is nitrogen, X and Z are —CH—; or when Z is nitrogen, X and Y are —CH—; and one of R_1 and R_2 is cyano and the other is straight-chain alkyl of 1 to 7 carbon atoms, straight-chain alkoxy of 1 to 7 carbon atoms or straight-chain alkanoyloxy of 2 to 7 carbon atoms, and one or more nematic compounds having a positive anisotropy.

4,062,799
METHOD OF FORMING MICROCAPSULE FILMS HAVING LOW POROSITY
Hiroharu Matsukawa, and Keiso Saeki, both of Fujinomiya, Japan, assignors to Fuji Photo Film Co., Ltd., Minami-ashigara, Japan
Continuation-in-part of Ser. No. 437,589, Jan. 29, 1974, abandoned. This application Apr. 19, 1976, Ser. No. 677,953
Claims priority, application Japan, Jan. 30, 1973, 48-12299
Int. Cl.² B01J *13/02*
U.S. Cl. 252—316 **17 Claims**

1. In a method of forming microcapsules having low porosity microcapsule films using a complex coacervation process which comprises the following steps of: (1) emulsifying a water-immiscible oil as a core material to be encapsulated in an aqueous solution of at least one hydrophilic colloid ionizable in water (the first sol), and admixing an aqueous solution of a hydrophilic colloid (the second sol) having an electric charge opposite to that of the first sol, the time of admixing the second sol being freely varied, or emulsifying a water-immiscible oil in an aqueous solution of hydrophilic colloids which are ionizable in water and at least one of which is positively charged; (2) either adding water thereto or adjusting the pH thereof to cause coacervation, thus obtaining coacervates wherein a complex colloid is adhered to the individual oil droplets; (3) cooling the coacervates to cause gelation thereof; (4) and adjusting the pH to the alkaline side in the presence of a hardening agent, or adding a hardening agent after adjusting the pH to the alkaline side, the improvement which comprises chemically or ionically binding a water soluble or water dispersible heterocyclic amine, said heterocyclic amine being a symmetrical or asymmetrical spiroacetal diamine represented by the following formula

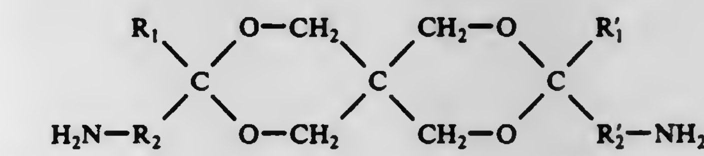

wherein R_1 and R_1' each represent a hydrogen atom or a lower alkyl group and R_2 and R_2' each represents a linear or a branched chain alkylene group having 1 to 7 carbon atoms or a derivative thereof selected from the group consisting of a condensation product of said heterocyclic amine with a compound containing at least one oxirane group, an addition product produced by reacting said heterocyclic amine with acrylonitrile, a reaction product produced by reacting said heterocyclic amine with urea, thiourea or guanidine and a reaction product produced by reacting said heterocyclic amine with an alkylene oxide, to the microcapsule film forming material by adding said amine during said complex coacervation process, or depositing said heterocyclic amine alone or a water insoluble material formed by reaction with said amine onto the microcapsule films after formation of said films, said heterocyclic amine being used in an amount of from 1/1000 to 1/2 by weight based on the weight of said core material.

4,062,800
BICHROMOPHORIC BENZOXAZOLE-STYRENE ESTER AND AMIDE ULTRAVIOLET STABILIZERS AND THEIR USE IN ORGANIC COMPOSITIONS
Gether Irick, Jr.; Charles A. Kelly, both of Kingsport, and James C. Martin, Johnson City, all of Tenn., assignors to Eastman Kodak Company, Rochester, N.Y.
Filed Aug. 16, 1976, Ser. No. 714,927
Int. Cl.² C08K *5/15, 5/34;* **C07D** *263/56;* **C09K** *15/00*
U.S. Cl. 252—402 **41 Claims**

1. An organic composition susceptible to ultraviolet light degradation stabilized against such degradation with a stabilizing amount of at least one bichromophoric compound having the formula:

A—B—C

wherein A is a group having the structure

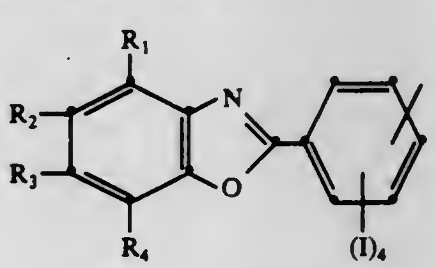

wherein

R_1, R_2, R_3 and R_4 are hydrogen, chloro, bromo, lower alkyl,

substituted lower alkyl, cycloalkyl, substituted cycloalkyl, aryl, substituted aryl, lower alkylaryl, aryl-substituted-aryl, alkoxy, substituted amino, cyano, carboalkoxy and the substituents R_1 and R_2, R_2 and R_3, and R_3 and R_4, combined with the carbon atoms to which they are attached, are joined alkylene groups completing a carbocyclic ring, which ring can also be substituted with one or more of the substituents listed above for R_1, R_2, R_3 and R_4;

I is the same as R_1, R_2, R_3 and R_4 and is present on all positions of the benzenoid ring, except the carbon atom attached to the heterocyclic ring and the carbon atom attached to the B group connecting the heterocyclic aromatic A group with the aromatic C group, wherein B is a linking group connecting A and C and can be oxy, oxycarbonylalkyleneoxy, alkyleneoxy, alkyleneoxyalkyleneoxy, oxyalkylenearylenealkyleneoxy, thio, thioalkyleneoxy, aminocarbonylalkyleneoxy, N-alkylaminocarbonylalkyleneoxy, N-arylaminocarbonylalkyleneoxy, N-alkylamino, N-arylamino, N-arylaminoalkyleneoxy, N-alkyleneaminoalkyleneoxy, oxyalkyleneoxy, oxyaryleneoxy; and

wherein C is a group having the formula

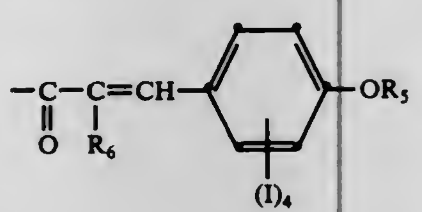

where I is the same substituent as listed above and said I substituents can all be one of the substituents listed above or different listed substituents and R_5 is an alkyl group containing 1 to 20 carbon atoms and R_6 is cyano, carboxamido, alkanoyl or alkylsulfonyl.

4,062,801

CATALYST REGENERATION METHOD

Vance P. Burton, Arlington Heights, and Michael Z. Mikulicz, Palatine, both of Ill., assignors to VOP Inc., Des Plaines, Ill.

Continuation-in-part of Ser. No. 605,561, Aug. 11, 1975, abandoned, which is a continuation-in-part of Ser. No. 475,686, June 3, 1974, abandoned. This application Dec. 16, 1976, Ser. No. 751,421

Int. Cl.² B01J *27/28, 21/20;* **C07C** *3/10*

U.S. Cl. 252—414 **4 Claims**

1. An in-situ method of regenerating a used fixed-solid phosphoric acid catalyst bed which has been deactivated by agglomerization of polymers formed during polymerization of an olefinic feed stream which comprises the steps of:

a. terminating the flow of said olefinic stream through said catalyst bed, and then draining any liquid from said catalyst bed while maintaining said catalyst bed at a temperature above 280° F.;
b. depressurizing said catalyst bed from a pressure above about 300 psig.; to a pressure below about 10 psig.;
c. immersing said catalyst bed drained of said olefinic feed stream in a liquid hydrocarbon mixture containing at least 5 wt. % aromatic hydrocarbon and which has a temperature above 280° F., without a throughput of said hydrocarbon mixture through said catalyst bed and wherein said hydrocarbon mixture is ingressed to said catalyst bed from the bottom of said bed in an upwardly direction;
d. pressurizing said catalyst bed to a pressure above 100 psig. and soaking said catalyst bed at a temperature over 280° F. for at least 10 minutes while said liquid hydrocarbon mixture is retained within said catalyst bed;
e. depressurizing said catalyst bed to a pressure below about 10 psig. and draining said liquid hydrocarbon from said catalyst bed;
f. repeating said steps (c), (d) and (e) twice; and,
g. pressurizing said catalyst bed to the pressure at which said catalyst bed is placed in use.

4,062,802

CARBON MONOXIDE TREATMENT OF A PHOSPHORUS-VANADIUM-ZINC OXYGEN CATALYST

Ralph J. Bertolacini, Chesterton, Ind., and Robert M. Koca, Glen Ellyn, Ill., assignors to Standard Oil Company (Indiana), Chicago, Ill.

Filed May 12, 1976, Ser. No. 685,716

Int. Cl.² B01J *27/14;* **C07D** *307/60*

U.S. Cl. 252—435 **20 Claims**

1. An improved phosphorus-vanadium-oxygen containing complex catalyst having an atomic ratio of phosphorus to vanadium in the range of from about 0.5–5 to 1 produced by a process comprising:

A. reacting a mixture comprising vanadium oxide, pentavalent phosphorus and hydrogen halide in an aqueous solution;
B. removing liquid from the mixture to form a solid; the improvement comprising:
 1. heating the solid to a temperature of less than about 470° C to effect liberation of water of hydration;
 2. contacting solid from step (1) with a reducing material comprising a gas selected from the group consisting of CO, H_2, and H_2S and mixtures thereof at a temperature of from about 300° to about 600° C. and in the substantial absence of gaseous oxygen other than that liberated from the solid.

4,062,803

METHOD FOR THE PREPARATION OF COMPLEXES OF METALS OF THE VIII GROUP OF THE PERIODIC TABLE AND THEIR USE AS CATALYSTS FOR TRANSFERRING HYDROGEN IN A HETEROGENEOUS PHASE

Renzo Bianchi, Melegnano, and Mario Gabriele Clerici, San Donato Milan, both of Italy, assignors to ANIC, S.p.A., Palermo, Italy

Filed Jan. 9, 1976, Ser. No. 647,781

Claims priority, application Italy, Jan. 10, 1975, 19164/75

Int. Cl.² B01J *31/30*

U.S. Cl. 252—429 B **1 Claim**

1. A method for the preparation of a resin complex of iridium which comprises reacting $Ir(III)Cl_3$ with a copolymer of styrene, p-Br-styrene and divinylbenzene that has been phosphinated with $ClP(isopropyl)_2$ after lithiation with butyl lithium in benzene and said resin complex is reduced with an excess of sodium borohydride.

4,062,804

PROCESS FOR THE PRODUCTION OF A CATALYST COMPONENT FOR USE IN THE POLYMERIZATION OF ALPHA OLEFINS

Hiroshi Ueno; Naomi Inaba, both of Ohi; Tokuo Makishima, Kawagoe, and Shozo Wada, Zushi, all of Japan, assignors to Toa Nenryo Kogyo Kabushiki Kaisha, Tokyo, Japan

Filed July 8, 1976, Ser. No. 703,562

Claims priority, application Japan, July 9, 1975, 50-83561

Int. Cl.² C08F *4/64*

U.S. Cl. 252—429 B **7 Claims**

1. A process for the production of a catalyst component for use in polymerization of alpha-olefins which comprises:

reducing titanium tetrachloride with a mixture of a dialkyl aluminum halide with an alkyl aluminum dihalide, wherein said dialkyl aluminum halide is employed in an amount of at least 1 mole per 1 mole of titanium tetrachloride and said alkyl aluminum dihalide is employed in an amount within the range of from 0.3 to 1.2 moles per 1 mole of titanium tetrachloride, to obtain a violet titanium trichloride reduced solid containing aluminum compounds;
removing aluminum compounds from said violet titanium trichloride reduced solid; and thereafter
contacting said violet titanium trichloride reduced solid in an inert diluent with an activator selected from the group consisting of a complex of diisoamyl ether and titanium tetrachloride, and a mixture of diisoamyl ether and titanium tetrachloride at a temperature within the range of from −30° to 100° C for at least 30 minutes, wherein the mole ratio of diisoamyl ether to titanium trichloride is at least 0.1 and the concentration of titanium tetrachloride in the diluent is maintained at at least 1 volume percent.

4,062,805

PROCESS FOR MANUFACTURING A CATALYST COMPRISING ALUMINUM OXIDE AND BORON OXIDE, THE RESULTING CATALYST AND THE USE THEREOF IN ALKYLATION REACTIONS

Jean-Pierre Franck, Bougival, and Jean-François Le Page, Rueil Malmaison, both of France, assignors to Institut Francais du Petrole, Rueil-Malmaison, France

Filed June 24, 1976, Ser. No. 699,454

Claims priority, application France, June 25, 1975, 75.20198

Int. Cl.² B01J *31/14, 21/02*

U.S. Cl. 252—430 **12 Claims**

1. A process for manufacturing a catalyst, wherein an aluminum compound of the formula $AlX_yR_{(3-y)}$ where X is halogen, R is a hydrocarbon radical and y is 1, 3/2, or 2, is reacted with a carrier consisting essentially of a mixture of aluminum oxide and boron oxide in proportions by weight of 1: 0.01 to 1: 1, respectively, and wherein the compound of formula $AlX_yR_{(3-y)}$ is used in a sufficient amount to introduce 0.5–20% by weight of halogen into the catalyst.

4,062,806

CATALYTIC COATING COMPOSITION

William Owen Roberts, Wilmington, Del., assignor to E. I. Du Pont de Nemours and Company, Wilmington, Del.

Filed June 21, 1976, Ser. No. 697,946

Int. Cl.² B01J *31/02, 21/18, 29/00*

U.S. Cl. 252—430 **12 Claims**

1. A composition for applying an oxidation catalyst coating to the surface of a solid substrate comprising (a) finely divided catalytic metal oxides dispersed in (b) an aqueous solution of alkaline silicate in which is dissolved (c) a vicinal alkane polyol, the amount of alkaline silicate corresponding to 10–40 pbw per 100 of any waterinsoluble solids in the composition and the amount of polyol corresponding to 40–125 pbw per 100 pbw alkaline silicate, dry basis, in the composition.

12. An assemblage for the preparation of oxidation catalyst coating compositions comprising (a) a first container of finely divided catalytic metal oxides and (b) a second container of an aqueous solution of alkaline silicate in which is dissolved vicinal alkane polyol,the amount of alkaline silicate corresponding to 10–40 pbw per 100 pbw of dry water-insoluble solids in the first container and the amount of polyol corresponding to 40–125 pbw per 100 pbw of dry alkaline silicate, dry basis, in the second container.

4,062,807

NITROGEN OXIDE REDUCING CATALYST

Kazuo Suzuki, Tokyo, Japan, assignor to Tokyo Shibaura Electric Co., Ltd., Kawasaki, Japan

Filed June 11, 1976, Ser. No. 695,051

Claims priority, application Japan, June 17, 1975, 50-72672

Int. Cl.² B01J *27/20, 35/00;* **C01B** *31/30;* **B01J** *8/00*

U.S. Cl. 252—443 **12 Claims**

1. A nitrogen oxide reducing catalyst produced by the process which comprises:

a. immersing a metal skeleton structure in a suspension prepared by suspending in a dispersion medium carbide particles of at least one transition metal selected from the group consisting of Cr, Ti, Zr, and V to attach said carbide particles to the surface of said skeleton, wherein said skeleton comprises at least one metal selected from the group consisting of Ni, Co, Fe and an alloy mainly comprised of at least two of these metals, and
b. sintering the combination of said skeleton and said attached carbide particles so as to sinter said carbide particles onto said skeleton.

4,062,808

STABILIZED RHENIUM CATALYST

Haren S. Gandhi, Dearborn Heights; Mordecai Shelef, Southfield; Henryk K. Stepien, Detroit, and Hsien C. Yao, Dearborn Heights, all of Mich., assignors to Ford Motor Company, Dearborn, Mich.

Continuation-in-part of Ser. No. 607,658, Aug. 25, 1975, Pat. No. 4,006,106. This application Aug. 30, 1976, Ser. No. 719,048

The portion of the term of this patent subsequent to Feb. 1, 1994, has been disclaimed.

Int. Cl.² B01J *21/04, 21/06, 21/08, 23/36*

U.S. Cl. 252—454 **4 Claims**

1. A rhenium catalyst resistant to volatilization after oxidation to a higher oxidation state consisting of:

a substrate formed of a ceramic material;
a refractory oxide coating on said substrate, said refractory oxide coating having a BET surface area of at least 175 square meters per gram; and
rhenium metal deposited on said substrate in a finely divided form;
said refractory oxide coating being present on said substrate by weight in a ratio of at least 15 units of refractory oxide coating for each unit of weight of rhenium present on said substrate.

4,062,809

CATALYST FOR PRODUCTION OF MIDDLE DISTILLATE OILS

John W. Ward, Yorba Linda, Calif., assignor to Union Oil Company of California, Los Angeles, Calif.

Filed Mar. 18, 1976, Ser. No. 668,039

Int. Cl.² B01J *29/06*

U.S. Cl. 252—455 R **5 Claims**

1. A hydrocracking catalyst composition comprising a molybdenum and/or tungsten first component plus a nickel and-/or cobalt second component supported on a heterogeneous support comprising 10–50 weight-percent of a cracking component consisting essentially of a finely divided silica-alumina cogel or copolymer containing about 50–90 weight-percent of SiO_2, said cracking component being dispersed in a matrix consisting essentially of alumina.

4,062,810

CARRIER-SUPPORTED CATALYST

Wilhelm Vogt, Huth-Efferen; Hermann Glaser, Erftstadt Lechenich, and Helmut Dyrschka, Erftstadt Kottingen, all of Germany, assignors to Hoechst Aktiengesellschaft, Frankfurt am Main, Germany

Continuation of Ser. No. 557,925, March 13, 1975, abandoned. This application Aug. 27, 1976, Ser. No. 718,331

Claims priority, application Germany, Mar. 14, 1974, 2412230

Int. Cl.² B01J *23/10*

U.S. Cl. 252—462 **4 Claims**

1. A carrier-supported catalyst, wherein the active ingredient consists essentially of cerium in oxide form and wherein 0.2 to 10 weight% of cerium, based on the carrier, is deposited thereon and wherein the carrier is produced by suspending aluminum oxide selected from the group consisting of delta-alumina and boehmite, and having an alkali content of up to 0.2 weight%, in water; heating the resulting highly viscous magma so as to form a dry mass; admixing graphite to the dry mass and grinding it; compressing the ground graphite-containing mass into shapes; burning off the graphite from the shapes at temperatures within the range 550° to 750° C; and calcining the shapes for periods within the range 10 to 20 hours at temperatures within the range 1000° to 1250° C.

4,062,811
METHOD FOR PREPARING DESULFURIZATION CATALYST

John David Hargrove, Aldershot, and Geoffrey Charles Stevens, London, both of England, assignors to The British Petroleum Company Limited, Sunbury-on-Thames, England

Filed May 26, 1976, Ser. No. 690,061
Claims priority, application United Kingdom, June 27, 1975, 27266/75
Int. Cl.² B01J *23/10, 23/78, 23/84*
U.S. Cl. 252—462 **1 Claim**

1. A method for preparing a catalyst, suitable for the hydrodesulphurisation of hydrocarbons, comprising from 1–10% weight of an iron group metal and from 5–25% weight of a Group VIB metal on a refractory support, the method comprising the step of refluxing the catalyst with an aqueous solution of a salt selected from the group consisting of alkali metals salts, alkaline earth metal salts, rare earth metal salts and transition metal salts, and drying and calcining the treated catalyst.

4,062,812
METHOD FOR EXTENDING THE FUNCTIONAL LIFE OF POLYMERS USED IN XEROGRAPHIC DEVICES

George J. Safford, Webster, and James A. Lentz, Penfield, both of N.Y., assignors to Xerox Corporation, Stamford, Conn.

Filed July 1, 1976, Ser. No. 701,709
Int. Cl.² H01B *1/00*
U.S. Cl. 252—500 **31 Claims**

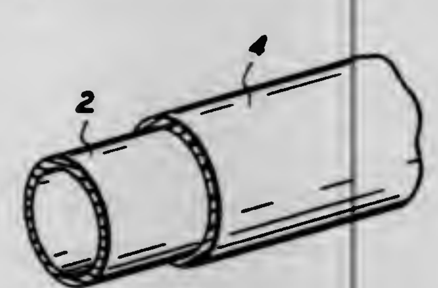

1. A method for controlling the electrical life of copolymers of butadiene and terminally unsaturated hydrocarbon nitrile comprising incorporating varying concentrations of at least one salt selected from the group of phosphonium salts and quaternary ammonium salts, said salt having an asymmetrical cation in the copolymer.

10. A method for controlling the electrical life of copolymers of butadiene and terminally unsaturated hydrocarbon nitrile comprising incorporating varying concentrations of at least one salt selected from the group consisting of phosphonium salts and quaternary ammonium salts, said salt having a structural charge specific anion in the copolymer.

4,062,813
SEMICONDUCTOR MATERIAL

Kuzma Andrianovich Andrianov, Vystavochny pereulok, 3, kv. 9, Moscow; Mikhail Izmailovich Topchiashvili, ulitsa Tashkentskaya 27/12, pod'ezd 3, Tbilisi; Lotary Mikhailovich Khananashvili, ulitsa Sumskaya 6, korpus 2, kv. 244, Moscow; Alexei Vladimirovich Danilov, Izmailovsky bulvar, 56, kv. 20, Moscow; Evgeny Ivanovich Ryabtsev, ulitsa Zelenodolskaya 11/16, kv. 15, Moscow; Dali Georgievna Pagava, ulitsa Takhvedadze, 30; Dzhimsher Shalvovich Bodzhgua, ulitsa Iosebidze, 78, both of Tbilisi; Veniamin Demyanovich Grigoriev, ulitsa Dzerzhinskogo, 16, kv. 14, and Vladimir Mikhailovich Fridland, ulitsa Gospitalnaya, 32, kv. 10, both of Kazan, all of U.S.S.R.

Continuation of Ser. No. 447,046, Feb. 28, 1974, abandoned. This application Apr. 20, 1976, Ser. No. 678,722
Int. Cl.² H01B *1/06*
U.S. Cl. 252—511 **10 Claims**

1. A semiconductor material consisting of polyvinyldimethylsiloxane rubber, filler material conducting electricity and a curing agent, which is dialkylaminomethyl trialkoxysilane, said components being taken in the following proportion (parts by weight):

polyvinyldimethylsiloxane rubber:100
electrically-conducting filler material:20–100 and a
dialkylaminomethyl trialkoxysilane:0.5–4,

said filler material being selected from the group consisting of carbon blacks, graphites, metals and metal salts, and said dialkylaminomethyl triethoxysilane being selected from the group consisting of diethylaminomethyl triethoxysilane, dimethylaminomethyl triethoxysilane, dibutylaminomethyl triethoxysilane, and dipropylamino-triethoxysilane.

4,062,814
LOW-FOAMING COLD-WATER GLASSWASHING DETERGENT

Gregory Blair Hansen, Royal Oak, Mich., assignor to BASF Wyandotte Corporation, Wyandotte, Mich.

Filed Oct. 18, 1976, Ser. No. 733,421
Int. Cl.² C11D *1/66*
U.S. Cl. 252—529 **14 Claims**

1. A composition consisting essentially of
1. a small amount, effective to promote detergency and sheeting action, of a hydrophobic nonionic surfactant, said nonionic surfactant being a block copolymer of ethylene diamine reacted first with propylene oxide to an average molecular weight of the oxypropylene hydrophobe of 5500 to 7000 and then with ethylene oxide to an extent such that oxyethylene units constitute about 8 to 12 percent of the weight of the average molecule of such copolymer,
2. an effectively solubility-promoting amount of a solubilizing compound having the formula

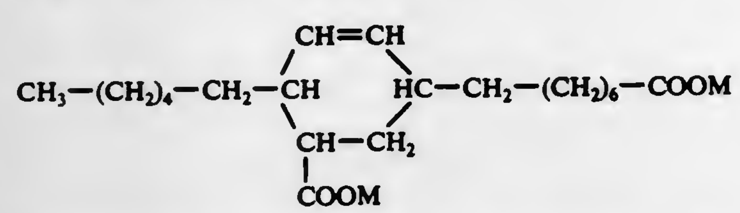

wherein M is independently an ion selected from the group consisting of hydrogen, sodium, potassium, and ammonium,
3. 5 to 30 weight percent of alkali-metal hydroxide selected from the group consisting of sodium hydroxide, potassium hydroxide, and mixtures thereof but not more than 20 weight percent of sodium hydroxide, and
4. water.

4,062,815
RESIN PEPTIDES

John Lawrence Hughes, Kankakee; Jay Kenneth Seyler, Bourbonnais, and Robert Chung-Huang Liu, Kankakee, all of Ill., assignors to Armour Pharmaceutical Company, Phoenix, Ariz.

Division of Ser. No. 496,539, Aug. 12, 1974, Pat. No. 3,926,938. This application Sept. 22, 1975, Ser. No. 615,303
Int. Cl.² C07C *103/52;* **C08L** *89/00*
U.S. Cl. 260—8 **2 Claims**

1. A resin peptide having the structure:

```
         BZ          BZ               C6H5
         |           |                |
NH2—SER—GLY—THR—PRO—NHCH— (X)
```

where X is divinylbenzene crosslinked polystyrene resin and BZ is benzyl, 4-methoxybenzyl, 3-4 dimethylbenzyl, 4-chlorobenzyl, 2-6 dichlorobenzyl, 4-nitrobenzyl, or benzhydryl.

2. A resin peptide having the structure:

```
      T          BZ          BZ
      |          |           |
NH2—ARG—THR—ASN—THR—GLY—
```


-continued

```
 BZ          BZ              C6H5
 |           |               |
—SER—GLY—THR—PRO—NHCH— (X)
```

where X is divinylbenzene crosslinked polystyrene resin BZ is benzyl, 4-methylbenzyl, 3-4 dimethylbenzyl, 4-chlorobenzyl, 2-6 dichlorobenzyl, 4-nitrobenzyl, or benzhydryl, and T is nitro or tosyl.

4,062,816
D-ALA⁵-SOMATOSTATIN AND INTERMEDIATES THERETO

James E. Shields, Indianapolis, Ind., assignor to Eli Lilly and Company, Indianapolis, Ind.

Filed Mar. 11, 1976, Ser. No. 665,979
Int. Cl.² C08L *37/00*
U.S. Cl. 260—8 **9 Claims**

1. A compound of the formula

```
H-L-Ala-Gly-L-Cys-L-Lys-D-Ala-L-Phe-L-Phe-L-Trp-L-
                |
-Lys-L-Thr-L-Phe-L-Thr-L-Ser-L-Cys-OH
```

and its pharmaceutically acceptable non-toxic acid addition salts, and intermediates to said compound, said intermediates having the formula R-L-Ala-Gly-L-Cys(R_1)-L-Lys(R_2)-D-Ala-L-Phe-L-Phe-L-Trp(R_5)-L-Lys(R_2)-L-Thr(R_3)-L-Phe-L-Thr(R_3)-L-Ser(R_4)-L-Cys(R_1)-X; in which

R is hydrogen or an α-amino protecting group;
R_1 is hydrogen or a thio protecting group;
R_2 is hydrogen or an ϵ-amino protecting group;
R_3 and R_4 each are hydrogen or a hydroxy protecting group;
R_5 is hydrogen or formyl; and
X is hydroxy or

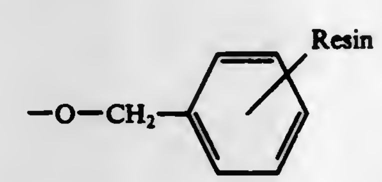

in which the resin is polystyrene; with the proviso that, when X is hydroxy, R, R_1, R_2, R_3, R_4, and R_5 each are hydrogen, and, when X is

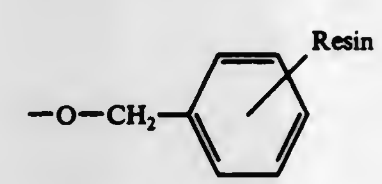

R, R_1, R_2, R_3, and R_4 each are other than hydrogen.

4,062,817
WATER ABSORBENT POLYMERS COMPRISING UNSATURATED CARBOXYLIC ACID, ACRYLIC ESTER CONTAINING ALKYL GROUP 10-30 CARBON ATOMS, AND ANOTHER ACRYLIC ESTER CONTAINING ALKYL GROUP 2-8 CARBON ATOMS

Ira John Westerman, Strongsville, Ohio, assignor to The B. F. Goodrich Company, Akron, Ohio

Filed Apr. 4, 1977, Ser. No. 784,099
Int. Cl.² C08L *5/00;* **C08F** *218/02, 218/14*
U.S. Cl. 260—17.45 G **19 Claims**

1. An interpolymer of monomers comprising from about 40 to 87 weight percent of an olefinically unsaturated carboxylic acid monomer, 2 to 20 weight percent of an (1) acrylic ester monomer of the formula

$$CH_2{=}\overset{R'}{\overset{|}{C}}-\overset{O}{\overset{\|}{C}}-O-R$$

where R′ is hydrogen, methyl or ethyl and R contains 10 to 30 carbon atoms and 5 to 30 weight percent of (2) at least one other acrylic ester monomer of the formula

$$CH_2{=}\overset{R'}{\overset{|}{C}}-\overset{O}{\overset{\|}{C}}-O-R$$

wherein R′ is hydrogen, methyl or ethyl and R contains 1 to 9 carbon atoms.

4,062,818
COMPOSITION FOR IMPARTING FLAME RESISTANCE AND WATER REPELLENCY TO TEXTILES

Zoltan Mate, Upper Nyack, N.Y., assignor to International Paper Company, New York, N.Y.

Filed Mar. 21, 1975, Ser. No. 561,086
Int. Cl.² C08L *1/26*
U.S. Cl. 260—17 R **14 Claims**

1. An aqueous composition for treating a fabric comprising, as ingredients:
a polyvinylacetate; a chloro- or bromo-substituted phosphate plasticizer; a polyfluoroalkyl polyacrylate, water repellent; and an inorganic, water soluble salt, flame retardant;
the relative amounts of said ingredients in said composition being such that said ingredients do not separate or precipitate from said composition;
said composition having a flame retardance adequate to enable a treated fabric to pass the Children's Sleepwear Flammability Standard for Test DOC-FF-3-71; and
said composition having a water repellency adequate to enable a treated fabric to hold a 4½ inch head of an aqueous 0.9% sodium chloride solution against a glass plate for one hour without wetting through.

5. The aqueous composition of claim 2 wherein the plasticizer is mixed with an emulsifier.

6. The aqueous composition of claim 5 wherein the emulsifier is carboxymethyl cellulose.

4,062,819
POLYAMIDE BLENDS HAVING IMPROVED PROCESSING CHARACTERISTICS

Harold E. Mains; Frederick R. Williams, and William L. O'Brien, all of Cincinnati, Ohio, assignors to Emery Industries, Inc., Cincinnati, Ohio

Filed Sept. 7, 1976, Ser. No. 720,535
Int. Cl.² C08L *77/08*
U.S. Cl. 260—18 N **15 Claims**

1. A method for improving the flow characteristics and rheological properties of a nylon resin which comprises blending therewith from 0.01% to 20% by weight of a high molecular weight polyamide additive having an amine value less than 3 and obtained by the reaction of a high molecular weight aliphatic or cycloaliphatic dibasic acid containing from 18 to 52 carbon atoms and up to 30 weight percent, based on total dibasic acid charge, of a short-chain, saturated, aliphatic dibasic acid having from 2 to 13 carbon atoms with a stoichiometric amount of an aliphatic, saturated diamine having from 2 to 10 carbon atoms or a mixture of said diamines.

4,062,820
THERMOPLASTIC REINFORCING ADHESIVES AND SUBSTRATES COATED THEREWITH
Mark L. Mitchell, III, and Hubert J. Sharkey, both of Cincinnati, Ohio, assignors to Emery Industries, Inc., Cincinnati, Ohio
Filed Dec. 6, 1976, Ser. No. 747,771
Int. Cl.² C08G *69/26*
U.S. Cl. 260—18 N 6 Claims

1. An improved copolyamide resin composition useful as a hot-melt reinforcing adhesive for flexible materials which comprises the condensation product of essentially stoichiometric amounts of (a) a mixture of a polymeric fatty acid, obtained from the polymerization of an olefinically unsaturated monocarboxylic acid containing from 16 to 20 carbon atoms, and a saturated aliphatic dicarboxylic acid having from 7 to 12 carbon atoms, the equivalent ratio of the respective acid components ranging from about 0.95:0.05 to about 0.7:0.3, with (b) a mixture of a saturated aliphatic diamine having from 2 to 6 carbon atoms and a polyoxyalkylene diamine of the formula

$$H_2N-\overset{CH_3}{\overset{|}{C}}HCH_2\left(O\overset{R}{\overset{|}{C}}HCH_2\right)_m OCH_2\overset{CH_3}{\overset{|}{C}}H-NH_2$$

where R is hydrogen or a methyl group and m is a positive integer so that the average molecular weight of the polyoxyalkylene diamine is between 600 and 5000, the equivalent ratio of said aliphatic diamine to said polyoxyalkylene diamine ranging from about 0.92:0.08 to 0.995:0.005.

4,062,821
RHEOLOGICALLY MODIFIED METAL DECORATING AND AQUEOUS COATING COMPOSITION COMPRISING COPOLYMER LATEX AND AMINOPLAST
Thomas M. Haag, Feasterville; William H. Brendley, Jr., Hatboro, both of Pa., and Richard Martorano, Marlton, N.J., assignors to Rohm and Haas Company, Philadelphia, Pa.
Continuation-in-part of Ser. No. 333,594, Feb. 20, 1973, abandoned. This application June 21, 1973, Ser. No. 372,447
Int. Cl.² C08L *61/20*
U.S. Cl. 260—29.4 UA 9 Claims

1. A pigmented or unpigmented thermosettable composition adapted for direct-roller coating of metals comprising an alkaline aqueous blend having a binder consisting essentially of:

A. a latex of a water-insoluble addition copolymer (2) 18 to 68% of at least one ester of acrylic or methacrylic acid, (3) at least one olefinically unsaturated monomer having at least one of an amide and a hydroxyl group, and (4) on olefinically unsaturated monomer having a carboxyl group, the amount of (3) being from 1.5 to 10% when said monomer contains an amide group and from 1.5 to 15% when said monomer contains a hydroxyl group, and the amount of (4) being from 0.5 to 5% based on the total weight of monomers, the Tg of the polymer being below 45° C., the total of (1), (2), (3), and (4) being 100, and

B. a water-soluble condensation products of urea or a triazine with formaldehyde or a water-soluble methanol or ethanol ether thereof,

the weight ratio of A to B on a solids basis being from 35:65 to 65:35, the minimum film-forming temperature of the composition being no higher than about 25° C., the solids content of the composition being between 40 and 80% by weight, said composition containing from 1 to 5% by weight based on the weight of the solids in the composition of a water-soluble rheology modifier in the form of a polyethylene glycol.

4,062,822
PROCESS FOR MANUFACTURING HYDRAULIC CONCRETES, MORTARS AND CEMENT SLURRIES OF IMPROVED PROPERTIES
Jean Lesage, Elancourt, France, assignor to Institut Francais du Petrole, France
Filed May 16, 1975, Ser. No. 578,184
Claims priority, application France, May 24, 1974, 74.18523
Int. Cl.² C04B *7/35*
U.S. Cl. 260—29.4 R 8 Claims

1. A process for the preparation of hydraulic cement products selected from the group consisting of slurries, concretes and mortars, comprising the step of admixing the usual components of said products with a hardenable fluidifying agent comprised of a combination of at least one epoxy resin in the form of an aqueous emulsion, a hardening agent for said resin and an aqueous solution of melamine-formaldehyde; the aqueous emulsion of epoxy resin being admixed in an amount from 0.5 to 10% of the cement weight and the melamine-formaldehyde aqueous solution being admixed in an amount from 1 to 10% of the cement weight.

4,062,823
HYBRID WATER-BASED ENAMELS WITH PARTIALLY CROSSLINKED LATEXES
Mo-Fung Cheung, Warren, and Ray A. Dickie, Birmingham, both of Mich., assignors to Ford Motor Company, Dearborn, Mich.
Filed Sept. 20, 1976, Ser. No. 724,823
Int. Cl.² C08L *61/24, 61/28*
U.S. Cl. 260—29.4 UA 7 Claims

1. In an aqueous dispersion of paint in which a carboxy-functional polymer is at least partially neutralized with a water-soluble amine and dispersed with an amino resin crosslinking agent selected from melamine-formaldehyde resins and urea-formaldehyde resins in an aqueous solution of water and a water-soluble amine, the improvement wherein the film-forming components of said dispersion of paint exclusive of said amino resin comprises the combination of:

I. about 30–70 parts by weight of a solution polymer which is a carboxy-functional copolymer of acrylic monomers that:
 A. is at least partially neutralized with watersoluble amine,
 B. is essentially soluble in said aqueous solution,
 C. has average molecular weight (M_n) in the range of about 3,000 to about 20,000 and
 D. has Tg in the range of −15° C. to 50° C., and

II. about 70 to about 30 parts by weight of an emulsion polymer selected from carboxy-functional, hydroxy-functional and carboxy-and hydroxy-functional copolymers of acrylic monomers, the constituent monomers of said emulsion polymer consisting of
 A. about 98 to about 99.5 mole percent of monoethylenically unsaturated monomers consisting essentially of acrylates, methacrylates, acrylic acid, methacrylic acid and vinyl hydrocarbons, and
 B. about 0.5 to about 2 mole percent of multiolefinically unsaturated monomers consisting essentially of diacrylates, dimethacrylates, triacrylates, trimethacrylates, tetraacrylates, tetramethacrylates, and divinyl hydrocarbons, that
  1. is essentially insoluble in said aqueous solution,
  2. has Tg in the range of −15° to 50° C., and
  3. has bimodal molecular weight distribution and comprises
   a. a noncrosslinked fraction having average molecular weight (M_n) in the range of about 3000 to about 20,000 and
   b. a crosslinked fraction constituting a gel,

and wherein said amino resin crosslinking agent is present in an amount in the range of about 15 to about 35 weight percent of the sum of the weights of said solution polymer and said emulsion polymer.

4,062,824
VINYL RESINS CONTAINING EPOXIDIZED MIXED MELLITATE COMPOUNDS
Alfred Johannes Dieterman, Mississauga, and Roland Hendrick Riem, Oakville, both of Canada, assignors to Emery Industries, Inc., Cincinnati, Ohio
Division of Ser. No. 417,586, Nov. 20, 1973. This application May 20, 1975, Ser. No. 579,091
Int. Cl.² C08K *5/12, 5/15, 5/49*
U.S. Cl. 260—30.4 R 3 Claims

1. A plasticized vinyl resin composition having impoved resistance to hydrocarbons comprising 100 parts polyvinyl chloride homopolymer or polyvinyl chloride copolymer and 5 to 100 parts of an epoxidized mixed mellitate of the formula

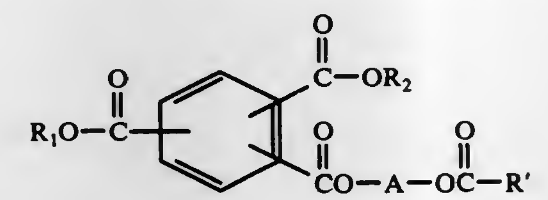

wherein R_1 and R_2 are alkyl radicals having from 4 to 18 carbon atoms, A is a bivalent hydrocarbon radical having from 2 to 8 carbon atoms and R' is a branched or straight-chain epoxyalkyl radical having from 3 to 21 carbon atoms derived from an unsaturated monobasic acid and epoxidized at the sites of unsaturation.

4,062,825
POLYURETHANE COMPOSITION HAVING IMPROVED TEAR STRENGTH AND PROCESS FOR PREPARATION THEREOF
Yoji Watabe, Fuchu; Michio Ishii, Murayama, and Yutaka Iseda, Tachikawa, all of Japan, assignors to Bridgestone Tire Company, Ltd., Tokyo, Japan
Filed Oct. 23, 1975, Ser. No. 625,248
Claims priority, application Japan, Oct. 29, 1974, 49-123961
Int. Cl.² C08K *3/36*
U.S. Cl. 260—37 N 16 Claims

1. A polyurethane composition for the preparation of articles having a high tear strength, comprising proportionally 100 parts by weight of prepolymer having terminal isocyanate groups, 20 to 50 parts by weight of finely divided acidic silica particles having a pH value of from 3 to 7 and appropriate parts of curative, the number average molecular weight of said prepolymer ranging from 1,000 to 5,000, the ratio (l/d) being such that the average distance (l) between adjacent crosslinking points of the cured polyurethane chains to average size (d) of the acidic silica particles ranges from 2.5 to 20.

4,062,826
POLYMERIC SHAPED ARTICLES
Francis Gowland Hutchinson; Richard George Cleveland Henbest, and Margaret Kenley Leggett, all of Runcorn, England, assignors to Imperial Chemical Industries Limited, London, England
Continuation-in-part of Ser. No. 230,092, Feb. 28, 1972, abandoned, which is a continuation-in-part of Ser. No. 45,946, June 12, 1970, abandoned. This application Jan. 9, 1976, Ser. No. 647,890
Claims priority, application United Kingdom, Feb. 20, 1970, 8224/70; June 23, 1969, 31605/69
Int. Cl.² C08L *75/06*
U.S. Cl. 260—40 TN 34 Claims

1. A tractable shaped article capable of being further shaped and cured into an intractable shaped article, said tractable shaped article consisting essentially of a homogeneously prepared mixture which has been polymerized to a degree that a tractable partially polymerized article is obtained, said homogeneously prepared mixture consisting essentially of:

a. from 5% to 95% by weight of polyurethane precursors free of ethylenic unsaturation comprising
 1. at least one polyol or hydroxy-terminated polyester containing hydroxy groups reactive with isocyanate groups wherein the hydroxy groups of said polyol or polyester polyurethane precursors are the only polyurethane precursor substituents reactive with isocyanate groups, and
 1. at least one polyisocyanate of the structure

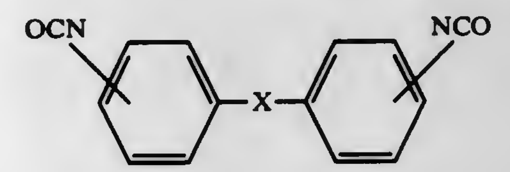

I

wherein X is a divalent radical containing at most three atoms in the chain between the phenyl groups in said structure, or a mixture comprising at least 40% by weight of the total polyisocyanate of at least one other polyisocyanate, said polyurethane precursors being capable of forming if cured alone in the absence of precursors of cured polyester resin a cross-linked polyurethane having a glass-rubber transition temperature of at least 25° C, as measured with a DuPont 900 thermal analyzer, the rate of heating the sample being 20° C per minute, at least one of said polyol, hydroxy-terminated polyester or other polyisocyanate being tri-functional or of higher functionality; and

b. from 95% to 5% by weight of precursors of cured polyester resin consisting essentially of
 3. at least one ethylenically unsaturated polyester containing in each molecule at least two hydroxy or carboxylic acid groups reactive with isocyanate groups, and
 4. at least one vinyl monomer containing at least one ethylenically unsaturated group which will react with ethylenically unsaturated groups in the polyester, said precursors of cured polyester resin comprising from 40–90% by weight of (3) and from 60–10% by weight of (4) and said vinyl monomer being selected from the group consisting of styrene, methyl methacrylate, divinyl benzene, diallyl phthalate and vinyl toluene.

4,062,827
COLORED CYANOACRYLATE ADHESIVE COMPOSITIONS
Herbert T. Zollman, Kingsport, Tenn., assignor to Eastman Kodak Company, Rochester, N.Y.
Filed Oct. 26, 1976, Ser. No. 735,653
Int. Cl.² C08K *5/04*
U.S. Cl. 260—42.21 7 Claims

1. A stable adhesive composition which is autopolymerizable when spread in thin films comprising a monomeric α-cyanoacrylate ester of the formula:

$$CH_2=\overset{CN}{\overset{|}{C}}-\overset{O}{\overset{\|}{C}}OR$$

wherein R is alkyl of 1 to 16 carbon atoms, alkenyl of 2 to 6 carbon atoms, alkoxyalkyl of 1 to 16 carbon atoms, cyclohexyl or phenyl; said compositions containing from 0.1 to about 5% by weight of a dye selected from 2-(3-hydroxy-2-quinolinyl)-1H-indene-1,3(2H)-dione and 12H-phthaloperin-12-one.

4,062,828

FLAME RESISTANT POLYAMIDE MOULDING COMPOSITIONS

Walter Herwig, Neuenhain, Taunus, and Hans-Jerg Kleiner, Kronberg, Taunus, both of Germany, assignors to Hoechst Aktiengesellschaft, Frankfurt am Main, Germany

Filed May 21, 1976, Ser. No. 688,895

Claims priority, application Germany, May 24, 1975, 2523145

Int. Cl.[2] C08K *5/04*

U.S. Cl. 260—45.7 P 6 Claims

1. A flame-proofed polyamide molding composition containing as a flame-proofing substance at least one phosphinylphosphinic acid of the formula

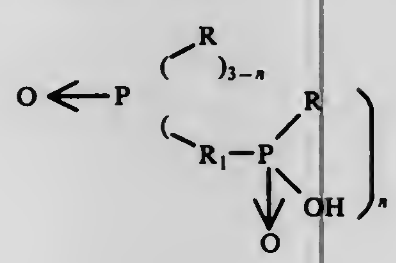

wherein

R is selected from saturated open chain-, branched and cyclic alkyl radicals having from 1 to 16 carbon atoms and aryl and aralkyl radicals having from 6 to 16 carbon atoms,

R_1 is selected from alkylene groups having from 1 to 8 carbon atoms and arylene groups and *n* is 1 to 3.

4,062,829

POLYESTER COMPOSITIONS AND METHODS OF STABILIZING SAME

William L. O'Brien, Cincinnati, Ohio, assignor to Emery Industries, Inc., Cincinnati, Ohio

Filed Nov. 8, 1976, Ser. No. 739,500

Int. Cl.[2] C08K *5/53*

U.S. Cl. 260—45.85 T 9 Claims

1. A polyester resin composition comprising

a high polymeric condensation thermoplastic polyester resin of a dicarboxylic acid and a glycol and,

as a stabilizer thereof in an effective amount an organophosphorus compound selected from the group consisting of compounds having the following formula and polycondensates thereof

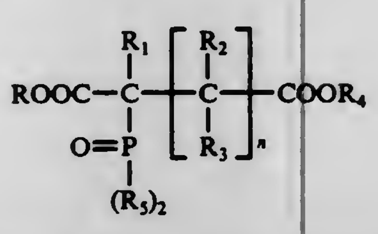

wherein R and R_4 are selected from the group consisting of alkyl, aralkyl, cycloalkyl, alkcycloalkyl, hydroxyalkyl, hydroxyaralkyl, hydroxyalkylether and hydroxyaralkylether, where R or R_4 is at least one of said hydroxyl terminated groups; where R_1, R_2 and R_3 are selected from the group of hydrogen and alkyl; where R_5 is selected from the group of alkyl, aryl, alkaryl, cycloalkyl, alkcycloalkyl, alkoxy, aralkyl and aralkoxy; and *n* is 1 or greater.

4,062,830

VULCANIZABLE COMPOSITIONS BASED ON ELASTOMERIC COPOLYMERS OF VINYLIDENE FLUORIDE, PROCESS FOR VULCANIZATION THEREOF UTILIZING PHOSPHOROUS METAL COORDINATION COMPLEX AND VULCANIZED COMPOSITIONS OBTAINED THEREBY

Giovanni Ceccato; Giovanni Moggi, and Sergio Geri, all of Milan, Italy, assignors to Montedison S.p.A., Milan, Italy

Filed June 2, 1975, Ser. No. 582,931

Claims priority, application Italy, June 3, 1974, 23505/74

Int. Cl.[2] C08K *5/49;* C08F *14/22;* C08L *23/32*

U.S. Cl. 260—47 UP 6 Claims

1. Vulcanizable compositions comprising:

1. 100 parts by weight of an elastomeric copolymer of (a) vinylidene fluoride, and (b) at least one fluorinated or chloro-fluorinated ethylenically unsaturated monomer selected from 1-hydropentafluoropropene, 2-hydropentafluoropropene, 1,1-dihydrotetrafluoropropene, hexafluoropropene, tetrafluoroethylene, trifluorochloroethylene, and fluorinated alkyl and aryl vinyl ethers;
2. 1–40 parts by weight of an inorganic acid acceptor selected from magnesium oxide, calcium oxide, lead monoxide, zinc oxide and basic lead phosphite as such or in the form of a complex or cationic chelate;
3. 0.5–10 parts by weight of at least one basic compound selected from calcium, strontium or barium hydrate, the alkali metal or alkaline earth metal salts of weak acids as such or in the form of complexes with chelating agents or cationic complexants;
4. 0.5–15 parts by weight of a vulcanizing agent selected from polyhydroxy and polythiol compounds of the formulae:

$$A(BC)_n \text{ and } CB—R—BC$$

wherein

A is an arylene radical;

n is a whole number equal to or greater than 2;

B is oxygen or sulfur;

C is hydrogen, an alkali metal or an alkaline earth metal;

R is an organic radical selected from the group consisting of alkylene, cycloalkylene, mono- or polyalkylenecycloalkyl, alkylenediaryl, bis-aryl sulfone, bis-arylsulfide, bis-aryl ether and bis-aryl ketone; and

5. 0.1–5 parts by weight of at least one phosphorus complex of the formulae:

$$a(MX)_m.b[(R_1R_2R_3)P] \quad (I)$$

$$a(MX_m).b[(R_1R_2R_3)P].c(R_4Y) \quad (II)$$

wherein

M is an element or oxygen containing group capable of forming coordination complexes with phosphorus and capable of yielding cations with a valence *m* of of from 1 to 4 and being selected from the group consisting of Cu, Hg, Zn, Cd, Fe, Co, Ni, Pd, VO^{+2} and TiO^{+2};

a, b and *c* are whole numbers of from 1 to 4;

R_1, R_2, R_3 and R_4 are the same or different and are selected from hydrogen, alkyl, aralkyl, alkylaryl, cycloalkyl, aryl, oxyalkyl, carbomethoxy alkyl or linear or cyclic polyoxyalkyl radicals with the hydroxyl group either free or etherified, or alkyl, cycloalkyl, aralkyl, alkylaryl, oxyalkyl, or linear or cyclic polyoxyalkyl radicals substituted by halogen groups;

R_1, R_2 and R_3 may also be selected from alkoxyl, cycloalkoxyl, aryloxyl, or alkylenearyloxyl radicals;

R_1, R_2, R_3 and R_4 when not hydrogen, have from 1 to 18 carbon atoms; and X and Y are organic and inorganic monovalent anions independently selected from the group consisting of halides, perchlorates, nitrates, acetates, haloacetates and benzoates.

4,062,831

COPOLYMERS BASED ON N-SUBSTITUTED ACRYLAMIDES, N-SUBSTITUTED METHACRYLAMIDES AND N,N-DISUBSTITUTED ACRYLAMIDES AND THE METHOD OF THEIR MANUFACTURING

Jindřich Kopeček; Karel Ulbrich; Jiří Vacík; Jiří Strohalm; Vladimír Chytrý; Jaroslav Drobník, and Jaroslav Kálal, all of Prague, Czechoslovakia, assignors to Ceskoslovenska akademie ved, Prague, Czechoslovakia

Filed Apr. 17, 1975, Ser. No. 568,777

Claims priority, application Czechoslovakia, Apr. 23, 1974, 2879/74

Int. Cl.[2] C08F *222/12;* C08J *5/20;* C08G *69/44, 73/16*

U.S. Cl. 260—47 UA 5 Claims

1. A copolymer consisting of:

1. 39.9 to 99.9 molar percent of a first monomeric component consisting of:
   a. 100 to 75 molar percent of a monomer comprising an N-monosubstituted acrylamide or methacrylamide or an N,N-disubstituted methacrylamide, each N-substituent being an alkyl or an alkyloxyalkyl group having 1 to 6 carbon atoms and 0 to 3 hydroxy groups; and
   b. 0 to 25 molar percent of a monovinylic monomer other than (a); and
2. a minor molar percent proportion of a second monomeric component having the general formula:

$$CH_2{=}\overset{\displaystyle R_4}{\overset{|}{C}}—CO—(NH—CH_2—CO)_n—NH—(CH_2)_x—COOR_5,$$

wherein:

R_4 is H or CH_3;

R_5 is the radical form of p-nitrophenol, 2,3,5-trichlorophenol, 8-hydroxyquinoline, N-hydroxysuccinimide, or N-hydroxyphthalimide;

n is 0 to 4; and

x is 1 to 10.

4,062,832

QUATERNIZED EPICHLOROHYDRIN COPOLYMER USEFUL IN TREATING POTABLE WATER AND METHOD OF PREPARATION

Herman S. Gilbert, Lake Jackson, and Stephen F. Kelley, Dallas, both of Tex., assignors to The Dow Chemical Company, Midland, Mich.

Continuation-in-part of Ser. No. 543,577, Jan. 23, 1975, abandoned. This application Mar. 3, 1976, Ser. No. 663,381

Int. Cl.[2] C08G *65/24, 65/32*

U.S. Cl. 260—47 EP 5 Claims

1. A water-soluble, crosslinked, quaternized halogen-containing alkylene oxide copolymer consisting essentially of mer units derived from (1) an epihalohydrin in the proportion of 50 to 99.9 mole percent, (2) a non-halogen-containing alkylene oxide in the proportion of 0 to 49.9 mole percent and (3) a polyepoxide in the proportion of from 0.1 to 10 mole percent, wherein from 10 to 100 percent of the halomethyl groups of the copolymer have been quaternized by reaction with a tertiary amine.

4,062,833

BIURET POLYISOCYANATES

Michael J. Van Eyck, and Kenneth A. Burdett, both of Midland, Mich., assignors to The Dow Chemical Company, Midland, Mich.

Filed Aug. 23, 1976, Ser. No. 716,850

Int. Cl.[2] C07C *119/042*

U.S. Cl. 260—77.5 AT 4 Claims

1. A compound having not more than six isocyanato groups and corresponding to the formula:

$$\begin{array}{l} OCN—R—N—C(O)—NX—R—NCO, \\ \qquad\qquad\;\; | \\ \qquad\quad O{=}C—NX—R—NCO \end{array}$$

wherein:

R is $—CH_2CH_2—O—CH_2CH_2—$ and X is hydrogen or $—C(O)—NX—R—NCO$.

4. In a process for making a biuret polyisocyanate-based polyurethane which comprises reacting an organic biuret polyisocyanate with an organic compound having at least 2 reactive hydrogen atoms, as determined by the Zerewitinoff procedure, the improvement comprising using the compound defined by claim 1 as the biuret polyisocyanate.

4,062,834

METHOD FOR PREPARING EXTRUDABLE POLYTETRAMETHYLENE ETHER POLYURETHANE-UREA RESINS

Denis Keith Gilding, Liverpool, England, and John Albert Taylor, Jr., Furlong, Pa., assignors to Ethicon, Inc., Somerville, N.J.

Continuation-in-part of Ser. No. 361,012, May 16, 1973. This application Apr. 29, 1975, Ser. No. 572,773

Int. Cl.[2] C08G *18/32*

U.S. Cl. 260—77.5 AA 11 Claims

1. A process for preparing melt-extrudable polytetramethylene ether polyurethane-urea resins which comprises:

a. reacting a polytetramethylene ether glycol having a molecular weight of from about 650 to 2,000 with 4,4'-diphenyl methane diisocyanate to form a prepolymer having isocyanate termination and a number average molecular weight of from about 2,000 to 10,000,

b. dissolving the prepolymer in an organic solvent,

c. extending said prepolymer by reaction in said organic solvent with water to form a solution of polytetramethylene ether polyurethane-urea polymer having a molecular weight of from about 50,000 to 100,000 in said solvent,

d. precipitating said polytetramethylene ether polyurethane-urea polymer from said solvent in an aqueous monohydric alcohol solution, and

e. recovering said precipitated polymer from said aqueous solution.

4,062,835

PENTAPEPTIDES AND METHODS FOR THEIR PRODUCTION

Francis John Tinney, Ann Arbor, Mich., assignor to Parke, Davis & Company, Detroit, Mich.

Filed June 23, 1976, Ser. No. 699,123

Int. Cl.[2] C07C *103/52*

U.S. Cl. 260—112.5 LH 4 Claims

1. A pentapeptide of the formula

X-R-Tyr(methyl)-Ser(benzyl)-R^1-Y

wherein X is t-butoxycarbonyl or benzyloxycarbonyl, R is a single amino acid fragment, a dipeptide fragment or tripeptide fragment utilizing amino acids selected from the group consisting of Pro, Aze, His(benzyl) and Trp; R^1 is a single bond or a single amino acid fragment or a dipeptide fragment utilizing amino acids selected from the group consisting of Ala, Trp and His and Y is lower alkoxy, amino, lower alkylamino or di(-lower alkyl)amino with the proviso that the total number of amino acid units when R and R^1 are combined is three.

4,062,836

DISPERSE PHENYLAZOPHENYLAZOBARBITURIC ACID DYESTUFFS

Hans Wilhelm Liechti, Oberwil, and Dieter Reinker, Seltisberg, both of Switzerland, assignors to Ciba-Geigy Corporation, Ardsley, N.Y.

Continuation of Ser. No. 546,864, Feb. 3, 1975, abandoned, which is a continuation of Ser. No. 225,276, Feb. 10, 1972, abandoned. This application Mar. 24, 1976, Ser. No. 669,771
Int. Cl.² C09B *31/28;* **D06P** *1/18, 3/26, 3/54*
U.S. Cl. 260—154 **1 Claim**

1. A disazo dyestuff of the formula

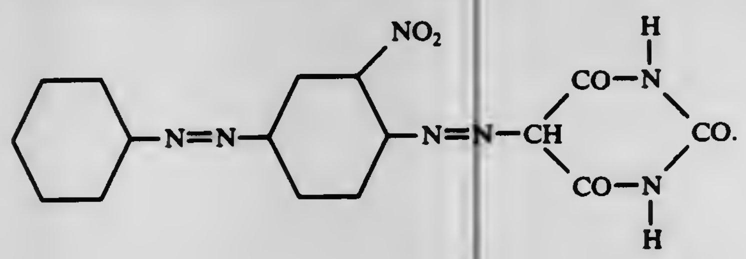

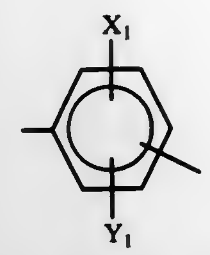

wherein X_1 and Y_1 denote hydrogen, halogen, alkyl containing 1 to 4 carbon atoms, alkoxy containing 1 to 4 carbon atoms, phenoxy, trifluoromethyl, nitro, cyano, or alkoxycarbonyl containing 2 to 5 carbon atoms, or naphthylene; X denotes hydrogen, alkyl containing 1 to 4 carbon atoms, alkoxy containing 1 to 4 carbon atoms, nitro, cyano, alkoxycarbonyl containing 2 to 5 carbon atoms, or alkanoylamino containing 2 to 5 carbon atoms; Y denotes hydrogen, halogen, alkyl containing 1 to 4 carbon atoms, or alkoxy containing 1 to 4 carbon atoms; and R denotes alkyl containing 1 to 6 carbon atoms.

4,062,837

DISAZO COMPOUNDS USEFUL AS COMPLEMENT INHIBITORS

Ransom Brown Conrow, Pearl River; Seymour Bernstein, New City, and Norman Bauman, Nanuet, all of N.Y., assignors to American Cyanamid Company, Stamford, Conn.

Filed Dec. 12, 1975, Ser. No. 640,098
Int. Cl.² C07C *107/04*
U.S. Cl. 260—175 **3 Claims**

1. A compound selected from those of the formula:

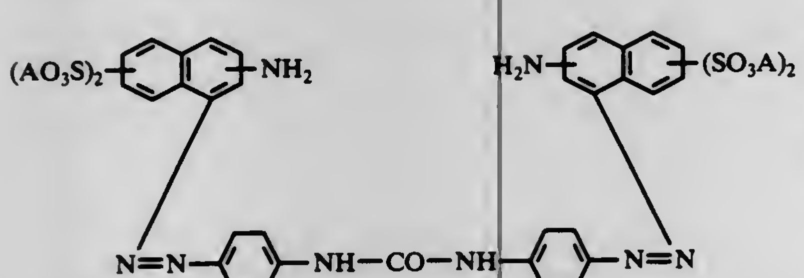

wherein A is H, Na or K, with the proviso that each A is identical in the same compound.

4,062,838

DISAZO PIGMENTS CONTAINING ACYLAMINO GROUPS

Georg Cseh, Arlesheim, and Stefan Hari, Allschwil, both of Switzerland, assignors to Ciba-Geigy Corporation, Ardsley, N.Y.

Continuation-in-part of Ser. No. 575,105, May 6, 1975, abandoned. This application May 14, 1976, Ser. No. 686,431
Claims priority, application Switzerland, May 9, 1974, 6373/74
Int. Cl.² C09B *33/14*
U.S. Cl. 260—176 **6 Claims**

1. A disazo pigment of the formula

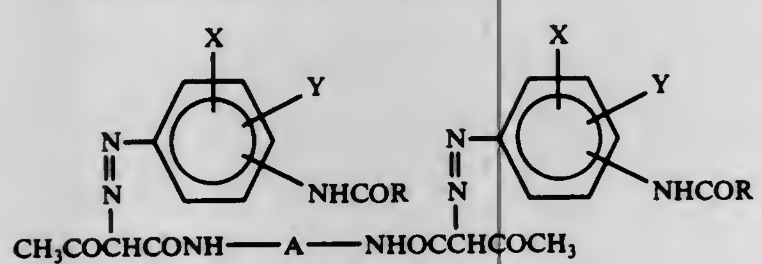

wherein A denotes a group of the formula

4,062,839

RESOLUTION OF α-AMINO-E-CAPROLACTAM OPTICAL ISOMERS

Stylianos Sifniades, Madison, and William J. Boyle, Jr., Warren, both of N.J., assignors to Allied Chemical Corporation, Morris Township, N.J.

Filed Sept. 16, 1976, Ser. No. 723,830
Int. Cl.² C07D *223/10*
U.S. Cl. 260—239.3 R **5 Claims**

1. A complex containing three mols of alpha-amino-e-caprolactam and one mol of magnesium chloride.

3. Process of obtaining at least partial separation of a mixture of D- and L-isomers of alpha-amino-e-caprolactam, comprising forming a supersaturated solution of such mixture and magnesium chloride, in a solvent containing ethanol, isopropanol or methanol or a mixture thereof; then contacting the solution with seed crystals of complex as defined in claim **1**, predominantly containing the desired isomer of aminocaprolactam.

4,062,840

AMINO-SUBSTITUTED 1,2,3,4-TETRAHYDRO-9H-TRIBENZO[b,d,f]AZEPINES

Willem Jacob van der Burg, Heesch, Netherlands, assignor to Akzona Incorporated, Asheville, N.C.

Division of Ser. No. 463,636, April 24, 1974, Pat. No. 3,950,425. This application Jan. 23, 1976, Ser. No. 651,760
Claims priority, application Netherlands, May 2, 1973, 7306069
Int. Cl.² C07D *223/14*
U.S. Cl. 260—239 D **25 Claims**

1. A compound of the formula:

I

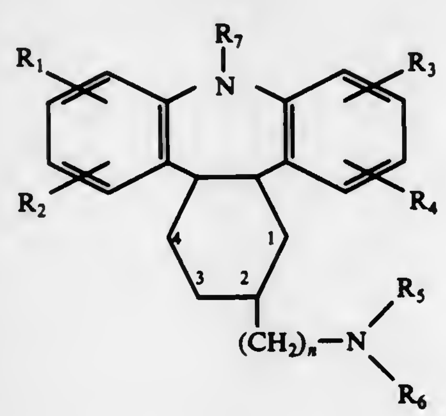

or a pharmaceutically acceptable salt thereof, in which
R_1, R_2, R_3 and R_4 are selected from the group consisting of hydrogen, hydroxy, halogen, alkyl having 1 to 6 carbon atoms, alkoxy having 1 to 6 carbon atoms, alkylthio having 1 to 6 carbon atoms and trifluoromethyl,

R_5, R_6 are selected from the group consisting of hydrogen, alkyl having 1 to 6 carbon atoms, aralkyl having 7 to 10 carbon atoms,
R_7 is selected from the group consisting of hydrogen and alkyl having 1 to 4 carbon atoms,
n is selected from 0, 1 and 2, and
the dotted line signifies an optional bond.

4,062,841

HETEROCYCLIC FATTY ACID AMIDES

Robert R. Mod, New Orleans; James A. Harris, Pearl River; Jett C. Arthur, Jr.; Frank C. Magne, both of Metairie; Gene Sumrell, New Orleans, and Arthur F. Novak, Baton Rouge, all of La., assignors to The United States of America as represented by the Secretary of Agriculture, Washington, D.C.

Filed Nov. 23, 1976, Ser. No. 744,583
Int. Cl.² C07D *295/18*
U.S. Cl. 260—239 BF **9 Claims**

1. A sulfur-containing fatty amide having antimicrobial activity and the general structure:

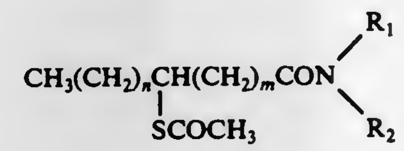

where R_1 and R_2 form a morpholine or piperidine ring; $n + m = 15$ and $n = m$ plus or minus 1.

3. A sulfur containing fatty amide having antimicrobial activity and the general structure:

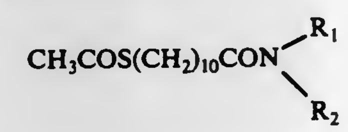

where R_1 and R_2 form a morpholine, piperidine or hexamethyleneimine ring.

8. A sulfur-containing fatty amide having antimicrobial activity and the general structure:

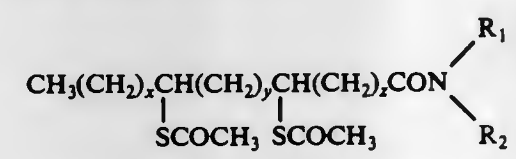

where R_1 and R_2 form a morpholine or piperidine ring; and $x = 4$ or 5; $y = 1,2$, or 3; and $z = 7$ or 8; if $x = 4$, then $y + z = 10$; if $x = 5$, then $y + z = 9$.

4,062,842

METHOD FOR PREPARING 7-SUBSTITUTED CEPHALOSPORINS AND 6-SUBSTITUTED PENICILLINS BY REPLACEMENT OF SULFUR-CONTAINING GROUPS

Joseph E. Dolfini, Cincinnati, Ohio; William A. Slusarchyk, Belle Mead, and William H. Koster, Pennington, both of N.J., assignors to E. R. Squibb & Sons, Inc., Princeton, N.J.

Continuation-in-part of Ser. No. 394,943, Sept. 6, 1973, abandoned, and a continuation-in-part of Ser. No. 394,713, Sept. 6, 1973, abandoned, said Ser. No. 394,943 is a continuation-in-part of Ser. No. 312,436, Dec. 6, 1972, abandoned, said Ser. No. 394,713 is a continuation-in-part of Ser. No. 312,472, Dec. 6, 1972, abandoned. This application Jan. 19, 1976, Ser. No. 650,221
Int. Cl.² C07D *501/04, 499/04*
U.S. Cl. 260—239.1 **23 Claims**

1. A process for preparing a compound of the formula:

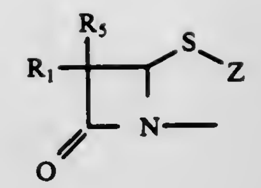

wherein Z is

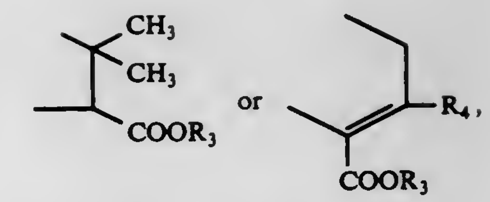

R_1 is selected from the group consisting of phthalimido, benzalimino, substituted benzalimino,

$$R_{10}-CH_2-\overset{\overset{O}{\|}}{C}-NH-$$

wherein R_{10} is selected from the group consisting of phenyl, substituted phenyl, 1,4-cyclohexadienyl, phenoxy, substituted phenoxy, thienyl, furyl, phenylthio and substituted phenylthio,

$$R_{11}-\underset{\underset{NH_2}{|}}{CH}-\overset{\overset{O}{\|}}{C}-NH-$$

wherein R_{11} is selected from the group consisting of phenyl, substituted phenyl, and 1,4-cyclohexadienyl, and

$$R_{12}-\overset{\overset{O}{\|}}{C}-NH-$$

wherein R_{12} is selected from the group consisting of lower alkyl, phenyl and substituted phenyl, and wherein said benzalimino, phenyl, phenoxy, or phenylthio substituent is one or two members selected from the group consisting of lower alkyl, lower alkoxy, nitro, chloro, fluoro and trifluoromethyl; R_3 is selected from the group consisting of hydrogen, t-butyl, trichloroethyl, trimethylsilyl, p-methoxybenzyl, and a cation selected from the group consisting of Na^+, Ca^{++}, Li^+, K^+, NH_4^+, and $(C_2H_5)NH^+$; R_4 is selected from the group consisting of methyl, acetoxymethyl, and carbamoyloxymethyl; and R_5 is selected from the group consisting of lower alkoxy, phenoxy, benzoyloxy, lower alkanoyloxy, amino, lower alkylamino, lower dialkylamino, and azido; which comprises reacting a compound of the formula

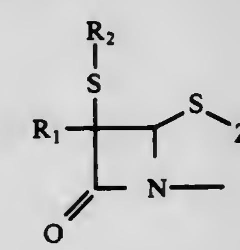

wherein R_2 is selected from the group consisting of lower alkyl, phenyl, phenyl-lower alkyl and substituted phenyl or phenyl-lower alkyl wherein said phenyl substituent is one or two members selected from the group consisting of lower alkyl, lower alkoxy, nitro, chloro, fluoro and trifluoromethyl; with a compound selected from the group consisting of a lower alkyl alcohol, phenol, lower alkanoic acid or its heavy metal salt, sodium azide, potassium azide, ammonia, lower alkylamine, and lower dialkylamine in the presence of an effective

catalytic amount of a catalyst selected from the group consisting of mercuric acetate, mercuric chloride, dimethoxy mercury, thallium acetate, silver tetrafluoroborate, silver acetate, lead acetate, silver nitrate, and silver perchlorate.

4,062,843

23-HYDROXY-3-OXO-24-NORCHOLA-4,17(20)-DIEN-21-OIC ACID γ-LACTONE AND INTERMEDIATES THERETO

Walter R. Benn, Deerfield, Ill., assignor to G. D. Searle & Co., Chicago, Ill.

Filed Dec. 29, 1976, Ser. No. 755,306

Int. Cl.[2] C07J *71/00, 9/00, 17/00*

U.S. Cl. 260—239.55 R **7 Claims**

1. A compound which is 23-hydroxy-3-oxo-24-norchola-4,17(20)-dien-21-oic acid γ-lactone.

4,062,844

PROCESS FOR PREPARING HYPOTENSIVE 2-(4-AROYLPIPERAZIN-1-YL)-AMINO-6,7-DIMETHOXYQUINAZOLINES

Philip D. Hammen, East Lyme, Conn., assignor to Pfizer Inc., New York, N.Y.

Filed Sept. 20, 1976, Ser. No. 724,707

Int. Cl.[2] C07D *239/95*

U.S. Cl. 260—256.4 Q **7 Claims**

1. A process for preparing a product of the formula

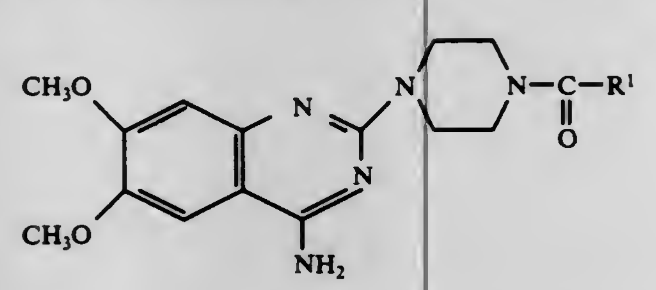

which comprises the steps of

a. contacting one mole of a first reactant of the formula

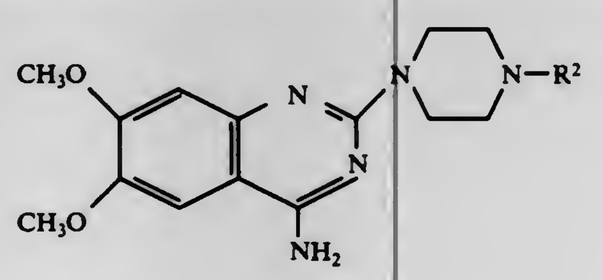

wherein

R^2 is a member selected from the group consisting of —CN,

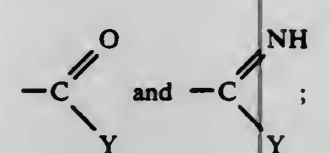

Y is a member selected from the group consisting of $—OR^3$, $—SR^3$ and $—NR^4R^5$;

R^3 is a member selected from the group consisting of alkyl having from one to four carbon atoms and phenyl;

R^4 and R^5 are the same or different and are each selected from the group consisting of alkyl having from one to four carbon atoms and phenyl;

with from about one to three moles of a second reactant of the formula

R^1M

wherein R^1 is a member selected from the group consisting of furyl, phenyl and thienyl;

and M is a member selected from the group consisting of Li, Na and MgX where X is Cl, Br or I;

under substantially anhydrous conditions in the presence of a reaction inert organic solvent at a temperature from about −80° to 65° C.; and

b. hydrolyzing the reaction mixture obtained in step a.

4,062,845

NAPHTHOLACTAM DYES

Ernst Schefczik, Ludwigshafen, Germany, assignor to BASF Aktiengesellschaft, Ludwigshafen, Germany

Division of Ser. No. 574,401, Pat. No. 4,009,165. This application June 18, 1976, Ser. No. 697,442

Claims priority, application Germany, June 11, 1974, 2428198

Int. Cl.[2] C07D *209/56*

U.S. Cl. 260—256.5 R **8 Claims**

1. A compound of the formula

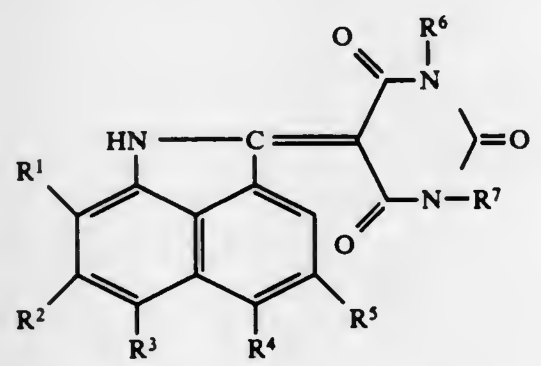

in which

R^1 is hydrogen, chloro, bromo, C_1 to C_4 alkyl, methoxy, ethoxy, nitro, phenylmercapto, or phenylmercapto substituted by chloro, methyl or methoxy,

R^2 is hydrogen or chloro,

R^3 is chloro, bromo, C_1-C_4-alkyl, methoxy, ethoxy, nitro, acetylamino, propionylamino, benzoylamino, methylsulfonylamino, ethylsulfonylamino, phenylsulfonylamino, tolylsulfonylamino, methylmercapto, ethylmercapto, phenylmercapto, phenylmercapto substituted by chloro, methyl or methoxy, napthylmercapto, phenylsulfonyl, phenylsulfonyl substituted by chloro or methyl, methylsulfonyl, ethylsulfonyl, N-mono-C_1- to C_8-alkyl-substituted sulfamoy, N,N-di-C_1- to C_4-alkyl-substituted sulfamoyl, N-phenylsulfamoyl, N-chloro-, -methyl-, -methoxy- or trifluoromethylphenylsulfamoyl, sulfopyrrolidide, sulfo-piperidide, sulfomorpholide, C_2- to C_4-alkanoyl, benzoyl or benzoyl substituted by chloro, bromo, methyl, ethyl, methoxy, or ethoxy,

R^4 is hydrogen, chloro, methoxy, ethoxy phenylmercapto, or phenylmercapto substituted by chloro, methyl or methoxy, or

R^3 and R^4 together are

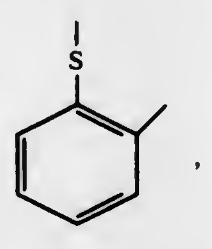

R^5 is hydrogen or chloro, methoxy or ethoxy, and

R^6 and R^7 are independently C_1- to C_8-alkyl, C_2- to C_8-alkyl substituted by hydroxy, cyano, C_1- to C_4-alkoxy or C_1- to C_4-alkoxy-carbonyl, phenyl, or phenyl substituted by chloro, methyl or methoxy with the proviso that at least one of the substituents R^1, R^3 or R^4 contains a sulfur atom.

4,062,846

HYDROXY PYRIMIDO COMPOUNDS

Harry Louis Yale, New Brunswick, N.J., and Ramesh B. Petigara, Lansdale, Pa., assignors to E. R. Squibb & Sons, Inc., Princeton, N.J.

Continuation-in-part of Ser. No. 395,326, Sept. 7, 1973, abandoned. This application Nov. 19, 1974, Ser. No. 525,144

Int. Cl.[2] C07D *513/04*

U.S. Cl. 260—256.5 R **5 Claims**

1. A compound of the formula

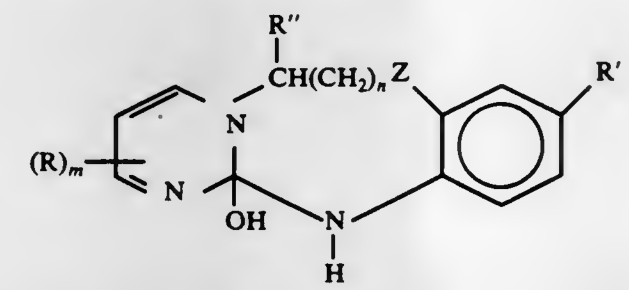

and tautomer thereof,

wherein *m* is 1 or 2; when *m* is 1, R occupies either position-4 or -5 of the starting 2-aminopyrimidine, but when R is halogen, it occupies only position -5; when *m* is 2, the two R's occupy the 4- and 5-positions of the starting 2-aminopyrimidine, but only one of the two R-substituents can be halogen and it must occupy the 5-position; R is the same or different and is hydrogen, F, Cl, Br, alkyl of from 1 to 4 carbons except where both alkyls are t-butyl, benzyl, phenyl, or mono-substituted phenyl wherein the substituent is F, Cl, Br, I, alkyl of from 1 to 4 carbons, alkoxy of from 1 to 4 carbons, or trifluoromethyl;

R′ is hydrogen, F, Cl, Br, CF_3, alkyl of from 1 to 4 carbons, or dialkylamidosulfonyl wherein each alkyl radical has from 1 to 4 carbons;

n is 0 or 1;

R″ is hydrogen or alkyl of from 1 to 4 carbons;

Z is S or SO_2,

and pharmaceutically acceptable acid additions salts thereof.

4,062,847

PROCESS FOR PREPARING OROTIC ACID

Paul Rambacher, Rosenheim-Mitterfeld, and Siegfried Mäke, Kirchdorf, Inn, both of Germany, assignors to Diamalt Aktiengesellschaft, Munich, Germany

Filed Jan. 21, 1976, Ser. No. 651,145

Claims priority, application Germany, Jan. 24, 1975, 2502951

Int. Cl.[2] C07D *239/54*

U.S. Cl. 260—260 **6 Claims**

1. A process for preparing a compound of the formula:

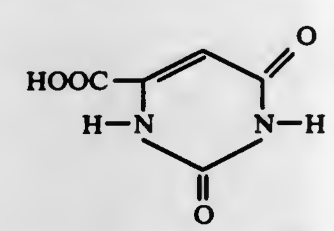

IA

which comprises reacting a compound of the formula:

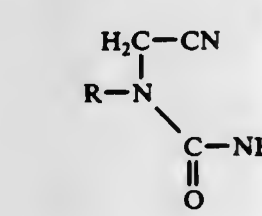

wherein R is hydrogen or an acyl group with glyoxylic acid in an alkaline medium to form a compound of the formula:

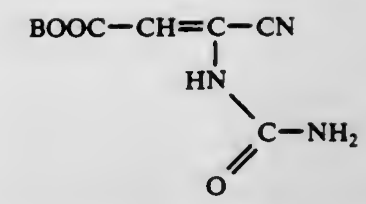

wherein B is an inorganic or organic cation, resulting from the alkaline medium saponifying and ring closing said compound in an alkaline medium to form a compound of the formula:

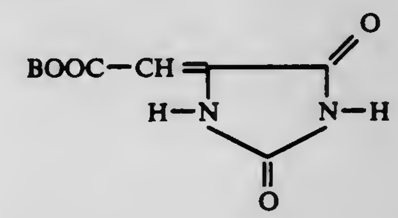

converting said compound in an alkaline medium to the salt of a compound of Formula IA, above, and recovering the free acid.

4,062,848

TETRACYCLIC COMPOUNDS

Willem Jacob van der Burg, Heesch, Netherlands, assignor to Akzona Incorporated, Asheville, N.C.

Filed Mar. 23, 1976, Ser. No. 669,544

Claims priority, application Netherlands, Apr. 5, 1975, 7504075

Int. Cl.[2] C07D *471/22*

U.S. Cl. 260—268 PC **4 Claims**

1. A compound of the formula:

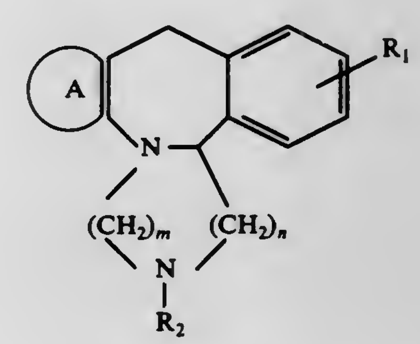

an acid addition salt thereof of a pharmaceutically acceptable acid, or a pharmaceutically acceptable quaternary ammonium salt thereof, in which

A represents pyridine or halogen-substituted pyridine,

R_1 respresent hydrogen, alkyl having 1 to 6 carbon atoms, alkoxy having 1 to 6 carbon atoms, alkylthio having 1 to 6 carbon atoms, halogen, OH, SH or CF_3,

R_2 represents hydrogen, alkyl having 1 to 6 carbon atoms or phenylalkyl, the alkyl of which has 1 to 4 carbon atoms, and

n and *m* represent the values 1, 2 or 3, with the proviso that the sum of $n + m$ must be 2, 3 or 4.

4,062,849

PERFLUOROALKYLENE QUATERNARY HETEROCYCLIC NITROGEN SALTS

Louis Foulletier, Oullins (Rhone), and Jean-Pierre Lalu, La Mulatiere (Rhone), both of France, assignors to Produits Chimiques Ugine Kuhlmann, Saint-Denis, France

Continuation of Ser. No. 821,132, May 1, 1969, abandoned. This application June 16, 1976, Ser. No. 696,727

Claims priority, application France, May 2, 1968, 68.150252

Int. Cl.[2] C07D *219/00*

U.S. Cl. 260—279 R **4 Claims**

1. A compound corresponding to the general formula:

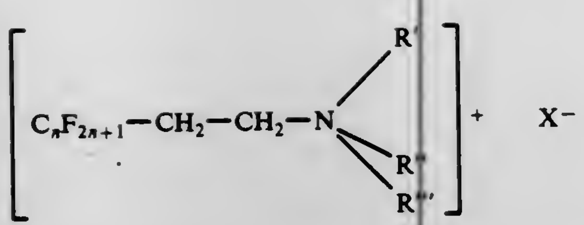

a. C_nF_{2n+1} represents a straight or branched perfluorinated chain with n being between 1 and 20;

b. X^- is a halogen, sulfate or an alkyl sulfate; and

c. R' is an alkyl radical containing from 1 to 8 atoms of carbons, and R" and R ''' together represent a divalent radical linked to the nitrogen by two simple bonds comprising cycloalkyl radicals containing from 4 to 9 carbons, cycloalkenyl radicals containing 4 to 9 carbons, or cyclodienic radicals containing from 4 to 9 carbons.

4,062,850

THIAZOLOISOQUINOLINES WITH CORONARY AND RESPIRATORY EFFECTS

Kalman Harsanyi; Kalman Takacs; Pal Kiss, all of Budapest; Laszlo Szekeres; Gyula Papp, both of Szeged, and Eva Benedek, Gyor, all of Hungary, assignors to Chinoin Pharmaceutical and Chemical Works Ltd., Budapest, Hungary

Continuation-in-part of Ser. No. 473,918, May 28, 1974, Pat. No. 3,979,397. This application June 30, 1976, Ser. No. 701,130

Claims priority, application Hungary, May 30, 1973, CI-1381

Int. Cl.² C07D *513/04;* **A61K** *31/47*

U.S. Cl. 260—286 R **3 Claims**

1. 1-cyano-2-imino-2H, 4H -5,6-dihydro-8,9-dimethoxy-1,2-thiazolo(3,2a) isoquinoline or 2-imino-2H,4H-5,6-dihydro-8,9-dimethoxy-1,2-thiazolo(3,2a) isoquinoline or a pharmaceutically acceptable salt thereof.

4,062,851

PROCESS FOR THE RESOLUTION OF CERTAIN OCTAHYDROBENZOCYCLOHEPTAPYRIDOISOQUINOLINOLS

Karel Pelz, St. Laurent; Francois T. Bruderlein, Montreal, and Leslie G. Humber, Dollard des Ormeaux, all of Canada, assignors to Ayerst McKenna and Harrison Ltd., Montreal, Canada

Filed Nov. 26, 1975, Ser. No. 635,993

Int. Cl.² C07D *471/06*

U.S. Cl. 260—289 C **4 Claims**

1. A process for resolving (±)-(4*a*,13*b*-trans)-(3-hydroxy,13*b*-trans)-3-isopropyl-2,3,4,4*a*,8,9,13*b*,14-octahydro-1H-benzo[6,7]**cyclohepta**[1,2,3-*de*]pyrido[2,1-a]isoquinolin-3-ol and (±)-(4*a*,13*b*-trans)-(3-hydroxy,13*b*-trans)-3-tert-butyl-2,3,4,4*a*,8,9,13*b*14-octahydro-1H-benzo[6,7]cyclohepta[1,2,3-*de*]pyrido[2,1-*a*]isoquinolin-3-ol, which consists of dissolving one part by weight of a racemic mixture of the (±)-(4*a*,13*b*-trans)-(3-hydroxy,13*b*-trans)-3-isopropyl-2,3,4,4*a*,8,9,13*b*,14-octahydro-1H-benzo[6,7]cyclohepta[1,2,3-*de*]pyrido[2,1-*a*]isoquinolin-3-ol or (±)-(4*a*,13*b*-trans)-(3-hydroxy,13*b*-trans)-3-tert-butyl-2,3,4,4*a*,8, -9,13*b*,14-octahydro-1H-benzo[6,7]cyclohepta[1,2,3-*de*]pyrido[2,1-a]isoquinolin-3-ol and 1.0 to 1.3 parts by weight of L-(+)-tartaric acid in 4 to 6 parts by volume of methanol at 20° to 40° C, diluting the solution with 1 to 3 parts of volume of acetone or ether at 15° to 25° C to crystallize the corresponding L-(+)-tartrate of the (+)-enantiomer of the compound; dissolving one part by weight of the L-(+)-tartrate in a mixture of 5 to 8 parts by volume of water and 5 to 8 parts by volume of a water-immiscible organic solvent containing 5 to 10 parts by weight of alkali; separating the water-immiscible solvent from the aqueous phase, and isolating the corresponding (+)-enantiomer free base from the water-immiscible solvent.

4,062,852

DIELS-ALDER ADDUCTS OF BENZOXADIAZEPINES AND BENZOTHIADIAZEPINES

Harry L. Yale, New Brunswick, and James A. Bristol, Boonton, both of N.J., assignors to E. R. Squibb & Sons, Inc., Princeton, N.J.

Division of Ser. No. 531,512, Dec. 11, 1974, Pat. No. 4,003,905. This application Oct. 22, 1976, Ser. No. 734,778

Int. Cl.² C07D *471/04*

U.S. Cl. 260—293.55 **12 Claims**

1. A compound having the structure

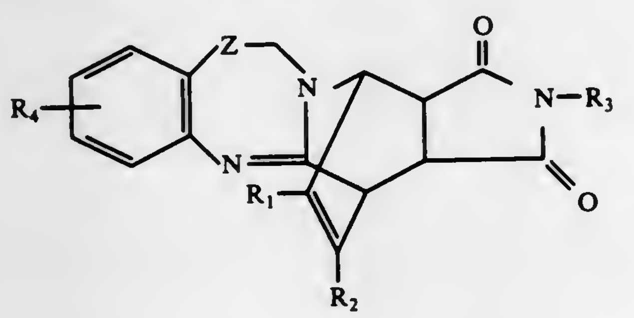

or a pharmaceutically acceptable salt thereof, wherein Z is oxygen or sulfur; R_1 is hydrogen, halogen, alkyl, aryl or arylalkyl; R_2 is hydrogen, alkyl, or arylalkyl; l; R_3 is hydrogen, alkyl, aryl or arylalkyl; and R_4 is hydrogen, halogen, alkyl phenyl, dialkylamidosulfonyl or trifluoromethyl; with the proviso that when R_4 is phenyl or dialkylamidosulfonyl, R_4 must be para to the oxygen or sulfur atom; and wherein alkyl and alkoxy refer to groups having 1 to 4 carbon atoms and aryl refers to phenyl or phenyl substituted with halogen, alkyl or alkoxy.

4,062,853

CHLORO-PYRIDINYLOXYMETHYL ESTERS OF THIOCYANIC ACID

James K. Pierce, Midland, and Sharon S. Whipple, Sanford, both of Mich., assignors to The Dow Chemical Company, Midland, Mich.

Filed July 23, 1973, Ser. No. 381,942

Int. Cl.² C07D *213/70*

U.S. Cl. 260—294.8 G **8 Claims**

1. A chloro-pyridinylyoxymethyl ester of thiocyanic acid corresponding to the formula ,03/0010

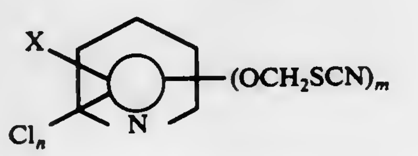

wherein m represents an integer from 1 to 3, n represents an integer from 1 to 4, X represents H, F, CCl_3 or OCH_2Cl, and the total number of substituent groups is no greater than 5.

4,062,854

PROCESS FOR PREPARING N-SUBSTITUTED-18,13-DIOXODINAPHTHO-(2,1-b; 2',3'-d)FURAN-6-CARBOXAMIDES

Bernard Grushkin, Pittsford, N.Y., assignor to Xerox Corporation, Stamford, Conn.

Filed July 9, 1973, Ser. No. 377,667

Int. Cl.² C07D *307/92*

U.S. Cl. 260—295 A **12 Claims**

1. A method of preparing a compound of the formula:

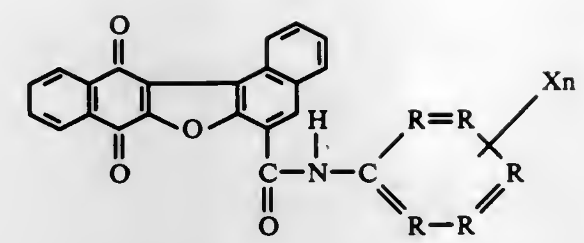

wherein:

each R is selected from the group consisting of N and "CH", from 1–3 R's being N;

each X is selected from the group consisting of H, CH_3, C_2H_5, NO_2, OCH_3, OC_2H_5, CN, SO_2NH_2, CO_2CH_3, $CO_2C_2H_5$, $SO_2NHC_6H_5$, Cl, F, Br, I and mixtures thereof; and

n is a positive integer from 1–4;

which comprises heating to a temperature within the range of from 50° C. to reflux a reaction mixture comprising:

i. 2,3-dichloro-1,4-naphthoquinone,

ii. a compound of the formula:

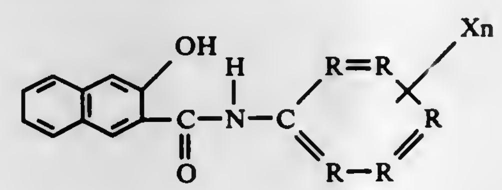

wherein R, X, and n are as defined above,

iii. an inorganic base selected from the group consisting of carbonates and bicarbonates of the alkali metals, oxides of the alkaline earth metals, and alkali metal and alkaline earth salts of organic acids; and

iv. a solvent selected from the group consisting of alcohols, 1-chloronaphthalene, high boiling ethers, dimethylformamide, dimethylacetamide and mixtures thereof.

4,062,855

SYNTHETIC POLYMERS FURNISHING CONTROLLED RELEASE OF A BIOLOGICALLY ACTIVE COMPONENT DURING DEGRADATION

G. Graham Allan, and Sreeman Amar Nath Neogi, both of Seattle, Wash., assignors to University of Washington, Seattle, Wash.

Filed Sept. 27, 1971, Ser. No. 184,259

Int. Cl.² C07G *69/08*

U.S. Cl. 260—295 PA **2 Claims**

1. A controlled release pesticide polymer made up of a polymer-forming pesticide component having di-functional reactive groups selected from the group consisting of $-NH_2$, -COOH and -OH, the polymer-forming pesticide component homopolymerized to form a polymer with a polymeric backbone having hydrophyllic linkages and a degree of polymerization such that when the pesticide polymer is placed in the medium where its activity is desired, the pesticide component is slowly released as a monomer over an extended period of time into the medium by random scission of the hydrophyllic linkages in the backbone of the pesticide polymer in an amount effective to control the pest.

4,062,856

UREIDOTETRALIN COMPOUNDS

Larry Dean Spicer, Princeton; Joseph Michael Pensack, Trenton; Robert Daniel Wilbur, Titusville, and Gary Michael Demkovich, Cranbury, all of N.J. (by Ruth Ellen Demkovich, legal representative), assignors to American Cyanamid Co., Stamford, Conn.

Division of Ser. No. 652,353, Jan. 26, 1976, Pat. No. 4,005,140, which is a division of Ser. No. 440,625, Feb. 7, 1974, Pat. No. 3,953,506. This application Sept. 9, 1976, Ser. No. 721,919

Int. Cl.² C07D *213/56*

U.S. Cl. 260—295.5 B **4 Claims**

1. A compound of the formula:

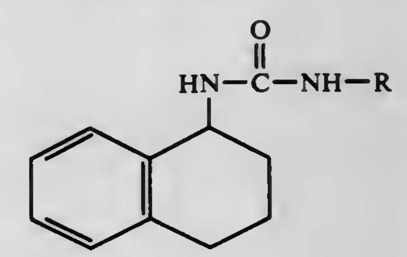

wherein R is selected from the group consisting of 2-pyridinyl and pyridinylmethyl.

4,062,857

PROCESS FOR PRODUCING ACRYLONITRILE POLYMER MELT

Toshiyuki Kobashi; Masahiko Ozaki, and Kenichi Ono, all of Okayama, Japan, assignors to Japan Exlan Company Limited, Osaka, Japan

Filed Nov. 4, 1976, Ser. No. 738,699

Claims priority, application Japan, Nov. 7, 1975, 50-134516

Int. Cl.² C08F *220/44;* **C08L** *33/20*

U.S. Cl. 260—29.6 AN **10 Claims**

1. A process for producing an acrylonitrile polymer melt which comprises polymerizing a monomer mixing consisting of 50 – 98 mol percent acrylonitrile and the remainder composed of at least one different ethylenically unsaturated compound in a system in which water is present in a quantity within the range of 3 – 60 weight percent based on the total amount of the monomer mixture and the water, under a pressure above the self-generated pressure, at a temperature of 80° – 120° C., to convert at least 45 weight percent of the monomer mixture to the acrylonitrile polymer.

4,062,858

DERIVATIVES OF 5,6-DIHYDROBENZO[5,6]CYCLOHEPTA[1,2-b]PYRAZOLO[4,3-e]PYRIDIN-11(1H)-ONES AND 11(1H)-IMINES

Hans Hoehn, Tegernheim, Germany; Jack Bernstein, New Brunswick, N.J., and B. Richard Vogt, Yardley, Pa., assignors to E. R. Squibb & Sons, Inc., Princeton, N.J.

Filed Dec. 22, 1976, Ser. No. 753,116

Int. Cl.² C07D *471/22*

U.S. Cl. 260—296 P **17 Claims**

1. A compound of the formula

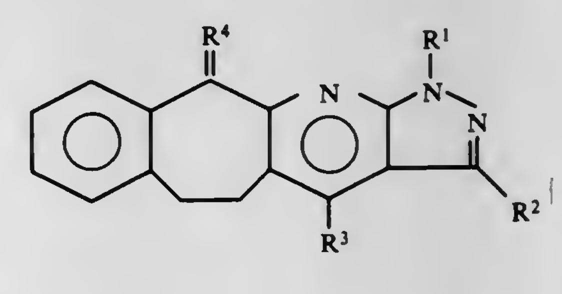

wherein

R^1 is lower alkyl, phenyl or phenyl-lower alkyl;

R^2 is hydrogen, lower alkyl or phenyl;

R^3 is hydroxy, lower alkoxy, halo or the group

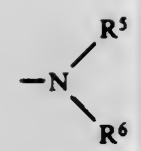

wherein R^5 is hydrogen, lower alkyl or phenyl and R^6 is lower alkyl or phenyl, or

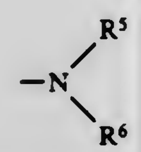

together is one of the unsubstituted heterocyclics piperidine or morpholine or one of said heterocyclics substituted with a lower alkyl or hydroxy-lower alkyl group;

R^4 is oxo, lower alkylimino or phenylimino; and physiologically acceptable salts thereof.

4,062,859
HALOGENATED 3-ISOTHIAZOLIDINONE 1-OXIDE AND 1,1-DIOXIDES
Ernest D. Weiler, Ambler, and George A. Miller, Glenside, both of Pa., assignors to Rohm and Haas Company, Philadelphia, Pa.
Filed Aug. 21, 1975, Ser. No. 606,618
Int. Cl.^{2} C07D *275/02*
U.S. Cl. 260—302 A **9 Claims**

1. A compound of the formula

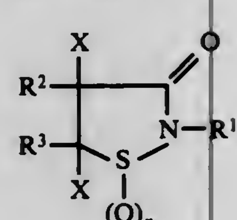

wherein

R^1 is hydrogen; (C_1–C_{18}) unsubstituted alkyl or hydroxy, halogen, (C_1–C_4) carbalkoxy, cyano or carboxy monosubstituted (C_1–C_{18}) alkyl; a cycloalkyl group having a (C_3–C_8) cycloalkyl ring and up to 12 carbon atoms; unsubstituted benzyl, or halogen-, (C_1–C_4) alkyl-, (C_1–C_4) alkoxy-, nitro or cyano- substituted benzyl; phenyl or naphthyl, or halogen-, (C_1–C_4) alkyl, or nitro- substituted phenyl or naphthyl;

X is halogen; and

n is 1 or 2.

4,062,860
PROCESS FOR PREPARING 3,4-DICYANO-1,2,5-THIADIAZOLE
Giuseppe Ribaldone, Gallarate (Varese), and Renato Grecu, Cameri (Novara), both of Italy, assignors to Montedison S.p.A., Milan, Italy
Filed Oct. 19, 1976, Ser. No. 733,940
Claims priority, application Italy, Nov. 18, 1975, 29384/75
Int. Cl.^{2} C07D *285/10*
U.S. Cl. 260—302 D **8 Claims**

1. A process for preparing 3,4-dicyano-1,2,5-thiadiazole comprising reacting diaminomaleonitrile with thionyl chloride wherein the thionyl chloride/diaminomaleonitrile molar ratio is from 2:1 to 10:1 at a temperature between 40° C. and the boiling point of thionyl chloride.

4,062,861
3-ISOXAZOLYLUREA DERIVATIVES
Hisajiro Yukinaga, Kusatsu; Shinzaburo Sumimoto, Osaka; Ichiro Ishizuka, Higashinose, and Jitsuo Sugita, Ikeda, all of Japan, assignors to Shionogi & Co., Ltd., Osaka, Japan
Continuation of Ser. No. 491,491, July 23, 1974, abandoned. This application Mar. 15, 1976, Ser. No. 667,033
Claims priority, application Japan, July 27, 1973, 48-85339
Int. Cl.^{2} C07D *261/14*
U.S. Cl. 260—307 H **13 Claims**

1. A compound selected from the group consisting of 1-methyl-3-(5-i-propyl-3-isoxazolyl)urea, 1-methyl-3-(5-t-butyl-3-isoxazolyl)urea, 1,1-dimethyl-3-(5-t-butyl-3-isoxazolyl) urea, 1,3-dimethyl-3-(5-t-butyl-3-isoxazolyl)urea, 1,1,3-trimethyl-3-(5-t-butyl-3-isoxazolyl)urea, 1-methyl-1-butyl-3-(5-t-butyl-3-isoxazolyl)urea, 1-allyl-1-methyl-3-(5-t-butyl-3-isoxazolyl) urea, 1,1-dimethyl-3-(5-i-propyl-3 -isoxazolyl)urea, 1-methoxy-1-methyl-3-(5-t-butyl-3-isoxazolyl)urea, 1-butylthio-1-methyl-3-(5-t-butyl-3-isoxazolyl)urea, 1-methyl-1-butyl-3-(5-i-propyl-3-isoxazolyl)urea and 1,3-dimethyl-3-(5-i-propyl-3-isoxazolyl-)urea.

4,062,862
5-BENZYL-2-OXAZOLIDONE DERIVATIVES AND A PROCESS FOR PRODUCING THE SAME
Yasuo Fujimoto, and Terumi Tamada, both of Tokyo, Japan, assignors to Nippon Chemiphar Co., Ltd., Tokyo, Japan
Filed July 1, 1976, Ser. No. 701,506
Claims priority, application Japan, July 4, 1975, 50-082546; Oct. 17, 1975, 50-125143
Int. Cl.^{2} C07D *263/20, 263/22, 263/24*
U.S. Cl. 260—307 C **9 Claims**

1. 5-(o-Chlorobenzyl)-2-oxazolidone.
6. 5-(o-Phenoxybenzyl)-2-oxazolidone.
8. 5-(o-Methoxybenzyl)-2-oxazolidone.

4,062,863
PHARMACOLOGICALLY ACTIVE CYCLO BUTENEDIONES
Charon Robin Ganellin, Welwyn Garden City, and Rodney Christopher Young, Bengeo, both of England, assignors to Smith Kline & French Laboratories Limited, Welwyn Garden City, England
Filed July 14, 1976, Ser. No. 705,216
Claims priority, application United Kingdom, July 31, 1975, 31971/75
Int. Cl.^{2} C07D *233/60;* A61K *31/41, 31/44, 31/425*
U.S. Cl. 424—273 R **7 Claims**

1. A compound of the formula:

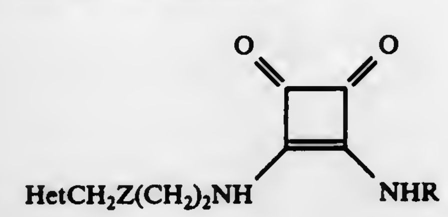

wherein R is hydrogen or lower alkyl; Z is sulphur or methylene; and Het is an imidazole ring optionally substituted by methyl or bromo; or a pharmaceutically acceptable acid addition salt thereof.

7. A method of blocking histamine H_2-receptors which comprises administering to an animal in an effective amount to block said receptors a compound of claim 1.

4,062,864
3-HYDROXY CARBAZOLE DERIVATIVES
Aram Mooradian, Schodack, N.Y., assignor to Sterling Drug Inc., New York, N.Y.
Continuation-in-part of Ser. No. 425,205, Dec. 17, 1973, Pat. No. 3,959,309, which is a continuation-in-part of Ser. No. 465,238, April 29, 1974, abandoned, which is a continuation-in-part of Ser. No. 172,206, Aug. 16, 1971, abandoned, which is a continuation-in-part of Ser. No. 793,545, Jan. 23, 1969, abandoned, which is a continuation-in-part of Ser. No. 659,606, Aug. 10, 1967, Pat. No. 3,642,816. This application May 20, 1975, Ser. No. 579,157
Claims priority, application Canada, Jan. 24, 1968, 10686
Int. Cl.^{2} C07D *209/88*
U.S. Cl. 260—315 **8 Claims**

1. A 3-(OZ)-9-R_4-1,2,3,4-tetrahydrocarbazole having the formula

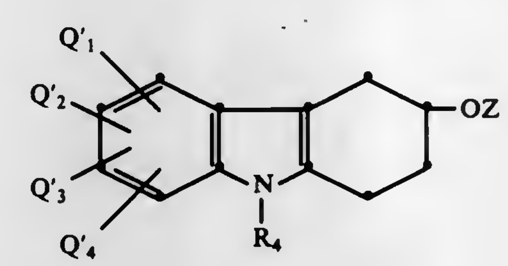

where Z is hydrogen or

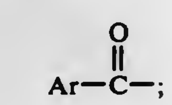

R_4 is hydrogen, lower-alkyl, Ar-lower-alkyl, carboxy-lower-alkyl or lower-alkoxy-carbonyl-lower-alkyl, or R_4 is Y-NR'R'', where R' and R'' are lower-alkyl and Y is lower-alkylene;

Q'_1 is selected from hydrogen, lower-alkoxy and halo;

Q'_2 is selected from hydrogen, non-tertiary-lower-alkyl, lower-alkoxy and halo;

Q'_3 and Q'_4 each are hydrogen; and

Ar is phenyl or phenyl mono-substituted by lower-alkyl or halo;

where lower-alkyl and lower-alkoxy, every occurrence, have from one to six carbon atoms and lower-alkylene has from two to four carbon atoms;

provided that when Z is hydrogen then R_4 cannot be lower-alkoxycarbonyl-lower-alkyl, and when R_4 is hydrogen or lower-alkyl at least one of Q'_1 and Q'_2 is other than hydrogen or lower-alkyl.

4,062,865
PROCESS FOR THE SYNTHESIS OF SUBSTITUTED INDOLENINES
Pietro Antonio Moggi, Milan, Italy, assignor to Snamprogetti S.p.A., Milan, Italy
Filed Apr. 4, 1975, Ser. No. 565,132
Claims priority, application Italy, Apr. 5, 1974, 50203/74
Int. Cl.^{2} C07D *209/04*
U.S. Cl. 260—319.1 **20 Claims**

1. A process for the preparation of an indolenine of the formula:

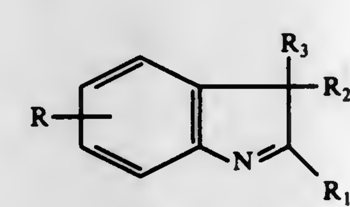

IV

wherein R is hydrogen, alkyl, aryl, cycloalkyl, halogen, or a functional group selected from among cyano, hydroxyl, alkoxy, nitro and sulphonic groups; each of R_1, R_2 and R_3 are the same, or different, and are alkyl, aryl, or cycloalkyl, comprising reacting an aromatic amine of the formula:

I

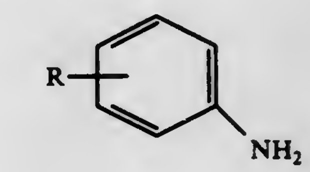

wherein R is the same as in formula IV, in an organic solvent, with a tertiary hydroxyketone of the formula:

II

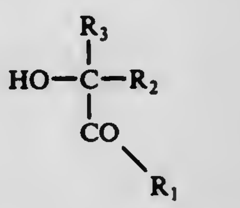

wherein R_1, R_2 and R_3 are as defined in formula IV, to form an imine of the formula:

III

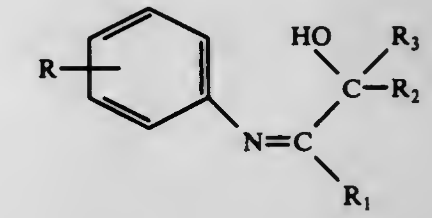

wherein R_1, R_2 and R_3 are as defined in formula IV and removing water from said imine to cyclize it to form the indolenine of formula IV.

4,062,866
3-INDOLYL-3-PHENYL-PHTHALIDES
Robert Garner, Bury, England, and Jean Claude Petitpierre, Kaiseraugst, Switzerland, assignors to Ciba-Geigy Corporation, Ardsley, N.Y.
Continuation of Ser. No. 471,395, May 20, 1974, abandoned. This application May 17, 1976, Ser. No. 686,863
Claims priority, application United Kingdom, May 21, 1973, 24077/73
Int. Cl.^{2} C07D *209/20*
U.S. Cl. 260—326.14 R **8 Claims**

1. A phthalide compound of the formula

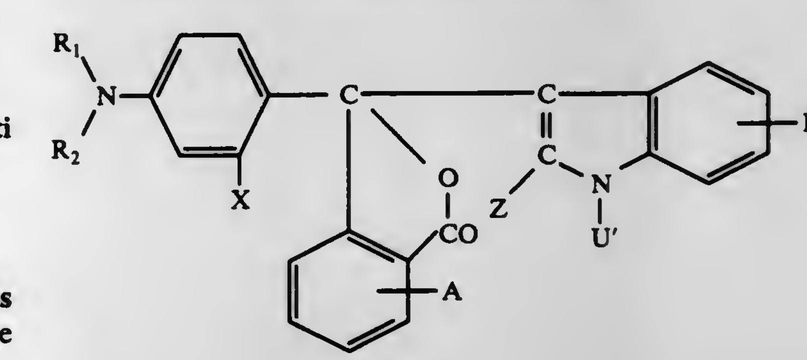

wherein R_1 and R_2, independently of the other, represent hydrogen, alkyl with 1 to 12 carbon atoms, alkoxyalkyl with 2 to 8 carbon atoms, cycloalkyl with 5 or 6 carbon atoms, benzyl or phenyl, X represents alkyl with 1 to 12 carbon atoms, alkoxy with 1 to 12 carbon atoms or alkanoyloxy with 2 to 4 carbon atoms, Z represents hydrogen, alkyl having 1 to 12 carbon atoms or phenyl, U' represents alkyl having 7 to 12 carbon atoms, benzyl or β-cyanoethyl, and A and B represent hydrogen, dimethylamino, diethylamino or n-hexylamino and B also represents nitro or halogen.

4,062,867
METAL 1,2 DITHIOLENE THIOPHENE DERIVATIVES
Stanley M. Bloom, Waban, Mass., assignor to Polaroid Corporation, Cambridge, Mass.
Division of Ser. No. 251,284, May 8, 1972, Pat. No. 3,875,199, which is a division of Ser. No. 60,982, July 6, 1970, Pat. No. 3,687,862, which is a division of Ser. No. 577,576, Sept. 2, 1966, Pat. No. 3,588,216. This application Dec. 26, 1974, Ser. No. 536,419
Int. Cl.^{2} C07D *333/00;* **F21V** *9/04;* **G02B** *3/00*
U.S. Cl. 260—329 ME **3 Claims**

1. A compound of the formula

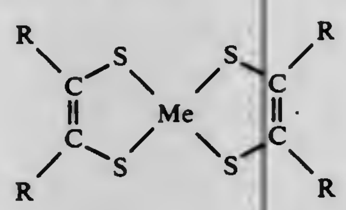

where Me is a metal selected from the group consisting of nickel, platinum or palladium and each R is the same radical selected from the group consisting of

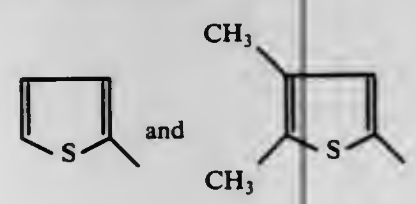

4,062,868
SYNTHESIS OF BIOTIN
Pasquale Nicholas Confalone; Elizabeth Dianne Lollar, both of Bloomfield; Giacomo Pizzolato, Belleville, and Milan Radoje Uskokovic, Upper Montclair, all of N.J., assignors to Hoffmann-La Roche Inc., Nutley, N.J.
Filed Feb. 23, 1977, Ser. No. 771,218
Int. Cl.^{2} C07D *333/24;* **A01N** *9/22, 9/00*
U.S. Cl. 260—332.2 A **3 Claims**

1. A compound of the formula

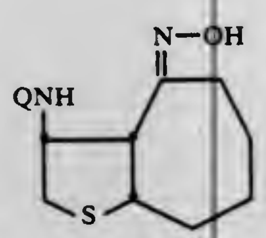

wherein Q is —CO_2R_4, where R_4 is lower alkyl the racemates and optical antipodes thereof.

4,062,869
PROCESS FOR PREPARATION OF TRYPTOPHOLS
George Oliver Weston, Havant, England, assignor to John Wyeth & Brother Limited, Maidenhead, England
Filed June 3, 1976, Ser. No. 692,619
Claims priority, application United Kingdom, June 3, 1975, 23884/75
Int. Cl.^{2} C07D *209/12*
U.S. Cl. 260—326.16 **9 Claims**

1. A process for preparing a 1-unsubstituted-3-(2-hydroxyethyl)indole which comprises reducing a 1-unsubstituted-3-indoleglyoxylic acid ester or acid halide with an alkali metal borohydride in the presence of a solvent selected from alkanols of 2 to 6 carbon atoms; ether derivatives of ethylene glycol; and dioxane.

4,062,870
CHROMAN DERIVATIVES
Eric Alfred Watts, Harlow, England, assignor to Beecham Group Limited, Great Britain
Division of Ser. No. 577,614, May 14, 1975. This application June 28, 1976, Ser. No. 700,555
Claims priority, application United Kingdom, May 31, 1974, 24348/74
Int. Cl.^{2} C07D *311/02;* **A01K** *31/35*
U.S. Cl. 260—345.2 **3 Claims**

1. an intermediate of the formula (VII ,03/0010

(VII)

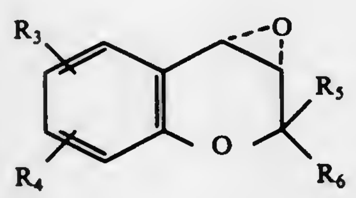

wherein
R_3 is nitro;
R_4 is hydrogen;
R_5 is hydrogen, alkyl of 1 to 6 carbon atoms or phenyl; and
R_6 is hydrogen, alkyl of 1 to 6 carbon atoms or phenyl.

4,062,871
PROCESS FOR THE DESUBLIMATION OF PHTHALIC ANHYDRIDE
Hubert Gehrken, Ahe, and Gerhard Keunecke, Geyen, both of Germany, assignors to Chemiebau Dr. A. Zieren Gesellschaft Mit Beschraenkter Haftung & Co. KG, Cologne, Germany
Continuation of Ser. No. 422,903, Dec. 7, 1973, abandoned. This application Feb. 14, 1975, Ser. No. 549,998
Int. Cl.^{2} C07D *307/89*
U.S. Cl. 260—346.4 **7 Claims**

1. In a process of the separation of phthalic anhydride from reaction gas obtained from the catalytic air oxidation of o-xylene which comprises cooling the gas in a separator in indirect heat exchange relationship with tubular cooling surfaces inside the separator maintained at 45°-60° C., collecting and withdrawing residual reaction gas through a gas outlet and melting off resultant desublimated phthalic anhydride from the cooling surfaces by heating the latter to a temperature in the range of 150°-250° C. said separator having a separator case section extending above the uppermost tubular cooling surfaces,

the improvement wherein the internal surface of said separator case section extending above the uppermost tubular cooling surfaces is maintained during the cooling of the gas inside the separator at a temperature of 150°-250° C. to prevent a buildup of non-meltable impurities on said uppermost tubular cooling surfaces.

4,062,872
PROCESS OF OXIDIZING HYDROCARBONS USING CATALYSTS WITH HIGH HEAT CONDUCTIVITY
Sandy Y. Lew, Libertyville, Ill., and Edward F. Conley, Hollis-ton, Mass., assignors to Brunswick Corporation, Skokie, Ill.
Continuation of Ser. No. 382,489, July 25, 1973, abandoned, which is a division of Ser. No. 133,391, April 12, 1971, Pat. No. 3,769,240. This application May 24, 1976, Ser. No. 689,248
Int. Cl.^{2} C07D *307/89;* **C07B** *3/00*
U.S. Cl. 260—346.4 **4 Claims**

1. In a method for the catalytic oxidation of a fluid hydrocarbon material which comprises the steps of:
1. contacting the hydrocarbon with a catalyst, the catalytic material being an oxide of a metal selected from Group I through Group VIII of the Periodic Table and (2) recovering the product: the improvement comprising using as the catalyst a plurality of pellets comprised of:
a compacted powdered catalytic matrix material and

a plurality of textile metal fibers uniformly dispersed in a random orientation throughout the matrix, the fibers being free of a catalytic coating and having a diameter less than 1 mil and comprising from about 2% to about 25% of the pellet weight.

4. A method of producing phthalic anhydride which comprises the steps of:
1. providing a bed of catalytic pellets, each comprised of:
a compacted powdered catalytic matrix material, the catalytic material consisting of a mixture of about 6% by weight of calcinated activated vanadium oxide and about 94% by weight silica gel; and,
a plurality of textile metal fibers uniformly dispersed in a random orientation throughout the matrix, the fibers being free of a catalytic coating and having a diameter of less than 1 mil and comprising from about 2% to about 25% of the pellet weight;
2. heating and maintaining the bed of catalytic pellets to a temperature within the range of about 350° - 370° C; and
3. passing a mixture of napthalene vapor and air in contact with the bed of heated catalytic pellets to produce phthalic anhydride.

4,062,873
PRODUCING MALEIC ANHYDRIDE USING CERTAIN PHOSPHOROUS-VANADIUM-SILICON-OXYGEN CONTAINING CATALYSTS
Jonas P. Harrison, Pinole, Calif., assignor to Chevron Research Company, San Francisco, Calif.
Continuation of Ser. No. 535,456, Dec. 23, 1974, abandoned. This application Oct. 21, 1976, Ser. No. 734,706
Int. Cl.^{2} C07D *307/60*
U.S. Cl. 260—346.75 **8 Claims**

1. A process for producing maleic anhydride which comprises partially oxidizing a normal-butane feed at a temperature in the range 300°-600° C by contacting said feed and an oxygen-containing gas with a catalyst comprising oxides of vanadium, phosphorus and silicon prepared by steps comprising:
a. coprecipitating vanadium oxide and an alkyl orthosilicate in an organic medium to form a coprecipitate of vanadium oxide and silica precursor and wherein the alkyl groups of the alkyl orthosilicate have 1 to 10 carbon atoms;
b. coprecipitating phosphorus either simultaneously with the vanadium oxide and alkyl orthosilicate coprecipitation or thereafter to thereby obtain the catalyst precursor; and
c. calcining the catalyst precursor to thereby obtain the silica-containing catalyst.

4,062,874
PHENOLIC STABILIZATION OF MALEIC ANHYDRIDE
Michael A. Sciaraffa, Bolingbrook, and Gregory S. Cermak, Westmont, both of Ill., assignors to Standard Oil Company (Indiana), Chicago, Ill.
Filed Dec. 20, 1976, Ser. No. 752,156
Int. Cl.^{2} C07D *307/32*
U.S. Cl. 260—346.76 **5 Claims**

1. A composition consisting essentially of maleic anhydride and a heat stabilizing concentration of from 1 to 200 ppm based on the concentration of maleic anhydride of at least one phenolic compound selected from the group consisting of 4-alkylphenols having the structure

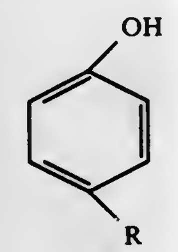

and 4,4'-di(hydroxyphenyl) alkanes having the structure

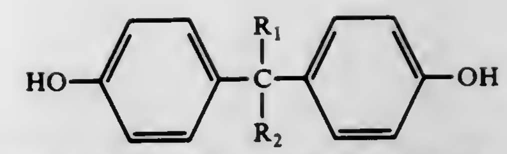

wherein R is an alkyl group of from 1 to 18 carbon atoms, R_1 and R_2 are independently hydrogen, alkyl groups of from 1 to 9 carbon atoms and R_1 and R_2 contain a total of 0 to 9 carbon atoms.

4,062,875
PREPARATION AND OXIDATION OF 4-ACYLAMINO-ANTHRONES
Horst Jäger, Leverkusen, and Erich Klauke, Odenthal, both of Germany, assignors to Bayer Aktiengesellschaft, Leverkusen, Germany
Filed Feb. 19, 1976, Ser. No. 659,601
Claims priority, application Germany, Mar. 8, 1975, 2510260
Int. Cl.^{2} C07C *63/44;* **C09B** *1/00*
U.S. Cl. 260—351 **13 Claims**

1. A process comprising treating a 2-acylamino-2'-carboxy-diphenylmethane with an acid condensing agent, whereby there is formed the corresponding 4-acylamino-anthrone.

9. A process according to claim 1, including the further step of oxidizing the 4-acylamino-anthrone, whereby there is formed the corresponding 1-acylamino-anthraquinone.

4,062,876
SENSITIVE PH INDICATOR
Clifton Aldridge, Maryland Heights, Mo., and Michael C. Meyer, O'Fallon, Ill., assignors to McDonnell Douglas Corporation, St. Louis, Mo.
Filed May 3, 1976, Ser. No. 682,652
Int. Cl.^{2} C09B *11/10*
U.S. Cl. 260—391 **5 Claims**

1. A process for reducing aniline blue in order to make it suitable for detecting minute changes in pH comprising the steps of
a. dissolving water-soluble aniline blue in an alkaline solution,
b. boiling the solution of step (a) in the presence of sodium thioglycollate until the aniline blue is reduced.

4,062,877
PROCESS FOR THE PREPARATION OF VIOLET DYESTUFFS OF THE TRIPHENYLMETHANE SERIES
Manfred Hahnke, Kelkheim, Taunus, and Theodor Papenfuhs, Frankfurt am Main, both of Germany, assignors to Hoechst Aktiengesellschaft, Frankfurt am Main, Germany
Filed Oct. 6, 1976, Ser. No. 730,207
Claims priority, application Germany, Oct. 11, 1975, 2545649
Int. Cl.^{2} C09B *11/10*
U.S. Cl. 260—391 **5 Claims**

1. In a process for preparing a triphenylmethane dyestuff wherein one mol of an aluminum chloride, borotrifluoride or iron-III-chloride complex compound of a 4,4',4"-trihalogenotriphenylmethyl-halide is reacted with 1 to 1.5 mols of a phenyl- or naphthyl amine substituted in m- or p-position by halogen, alkyl of 1 to 4 carbon atoms, alkoxy of 1 to 4 carbon atoms, phenyl, naphthyl, nitro, cyano, sulfonamide, a sulfonic acid (lower alkyl) ester or a carboxylic acid (lower alkyl) ester group, at a temperature of from about 110° to about 135° C, in the presence of an organic solvent which is inert under the reaction conditions, and the 4,4'-dihalogeno-4"-(m- or p-substituted)-phenylamino-(or naphthylamino)-triphenylmethyl halide formed is reacted with an arylamine, the improvement for preparing a violet dyestuff consisting of reacting said 4,4'-dihalogeno-4"-(m- or p-substituted)-phenylamino- or naphthylamino-triphenylmethylhalide formed with 5 to 20 mols of an ortho-substituted phenyl or naphthyl amine at a temperature between 150° and 190° C.

4,062,878
PREPARATION OF NOVEL KETO-ESTERS
Pierre Pesnelle, Rueil-Malmaison, and Paul Jose Teisseire, Grasse, both of France, assignors to Societe Anonyme Roure Bertrand Dupont, Paris, France
Division of Ser. No. 444,488, Feb. 21, 1974. This application Sept. 16, 1976, Ser. No. 723,720
Claims priority, application Switzerland, Feb. 28, 1973, 2885/73
Int. Cl.² C07C *49/27;* **C09B** *11/06;* **C07C** *49/76*
U.S. Cl. 260—395 **6 Claims**

1. Compounds of the general formula

A

wherein R¹ represents methyl or benzyl, and X represents hydroxy, trityloxy, tosyloxy or halogen.

4,062,879
PROCESS FOR SYNTHESIS OF COENZYME Q COMPOUNDS
Shizumasa Kijima; Isao Yamatsu, both of Tokyo; Norio Minami, Kawasaki, and Yuichi Inai, Tokyo, all of Japan, assignors to Eisai Co., Ltd., Tokyo, Japan
Filed Sept. 22, 1976, Ser. No. 725,447
Claims priority, application Japan, Sept. 29, 1975, 50-116399
Int. Cl.² C07C *49/73;* **C07F** *5/04*
U.S. Cl. 260—396 R **7 Claims**

1. A process for synthesizing 2,3-dimethoxy-5-methyl-6-substituted-1,4-benzoquinone having the formula

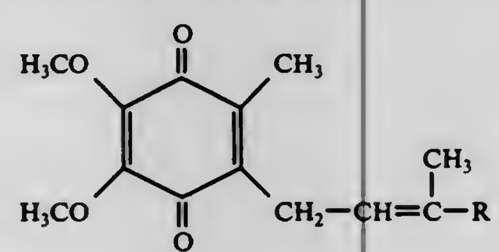

wherein R is

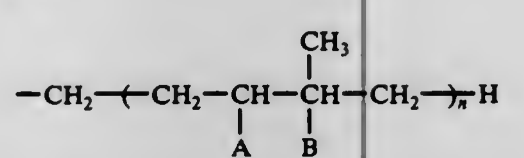

in which n is an integer from zero to 9, and A and B are hydrogens or A-B is a direct valence bond between the carbon atoms to which they are attached,

which comprises

1. reacting 2-methyl-4,5,6-trimethoxyphenol with a member selected from the group consisting of borax, boric anhydride, orthoboric acid and metaboric acid to form the corresponding borate,
2. reacting the borate obtained in step (1) with a prenol compound having the formula

$$R-\overset{CH_3}{\overset{|}{C}}=CH-CH_2-OH \quad \text{or}$$

an iso-prenol compound having the formula

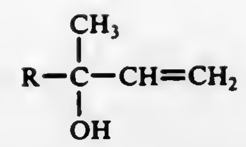

wherein R has the same meaning as defined above, or a corresponding halide derivative thereof, in the presence of a silica-alumina compound, to obtain the 2-methyl-3-substituted-4,5,6-trimethoxyphenyl borate,

3. hydrolyzing the borate obtained in step (2) to obtain a compound having the formula

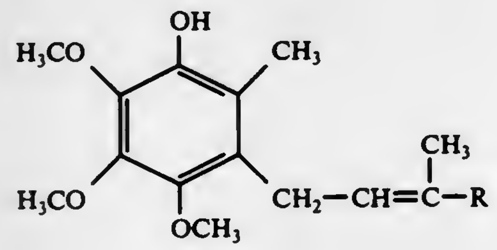

wherein R has the same meaning as defined above and then reacting the latter compound with a mild oxidizing agent to obtain a compound of the first-named formula.

4,062,880
9α-HYDROXY-BIS-NOR-CHOLANIC ACID
Frederick J. Antosz; Willard J. Haak, and Merle G. Wovcha, all of Kalamazoo, Mich., assignors to The Upjohn Company, Kalamazoo, Mich.
Division of Ser. No. 681,789, April 30, 1976, Pat. No. 4,029,549, which is a continuation-in-part of Ser. No. 670,657, March 26, 1976, abandoned. This application Jan. 21, 1977, Ser. No. 761,059
Int. Cl.² C07J *9/00*
U.S. Cl. 260—397.1 **1 Claim**

1. The compound 9α-hydroxy-3-ketobisnorchol-4-en-22-oic, in its essentially pure form, having the formula:

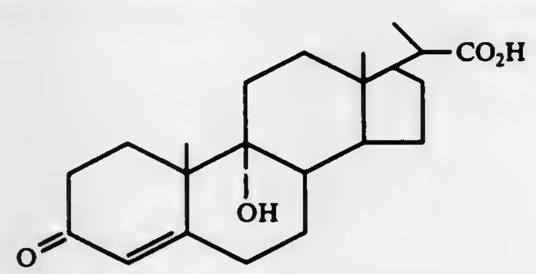

4,062,881
SULFIDE CONTAINING TIN STABILIZERS
Thomas G. Kugele, Cincinnati, Ohio, assignor to Cincinnati Milacron Chemicals, Inc., Reading, Ohio
Filed July 26, 1974, Ser. No. 492,969
Int. Cl.² C08H *3/00;* **C07F** *7/22*
U.S. Cl. 260—399 **61 Claims**

1. A monoorganotin or diorganotin mercaptoalkyl ester of a carboxylic acid or mercapto hydroxyalkyl ester of a carboxylic acid mono or poly sulfide useful as a stabilizer for improving the resistance to deterioration of vinyl chloride polymers when heated at 350° F, containing at least one tin atc having one to two hydrocarbyl groups having from 1 to 20 carbon atoms and selected from the group consisting of alkyl, aryl, cycloalkyl, aralkyl and alkenyl and linked to the tin through carbon, at least one mercaptoalkyl ester of a carboxylic acid group linked to tin through the sulfur of the mercaptoalkyl group and at least one mono or polysulfide sulfur group bonded exclusively to tin, the organotin compound having an amount of tin within the range from 10 to 42% by weight and an amount of sulfur within the range from 8 to 42% by weight.

2. An organotin compound according to claim 1, having the formula:

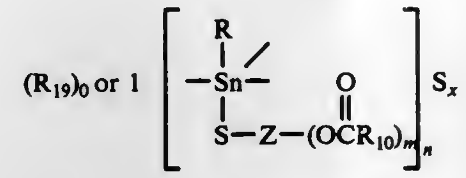

wherein R is alkyl, aryl, cycloalkyl, aralkyl or alkenyl of 1 to 20 carbon atms, R_{19} is R or

$$-S-Z\,(O\overset{O}{\overset{\|}{C}}R_{10})_m$$

where Z is a polyvalent alkylene or hydroxy-alkylene radical of at least 2 carbon atoms, the valency of Z being $m+1$ R_{10} is hydrogen, hydrocarbyl of 1 to 19 carbon atoms wherein the hydrocarbyl is alkyl, aryl, aralkyl, cycloalkyl, aralkenyl or alkenyl having up to 3 ethylene double bonds, hydroxyalkyl of up to 19 carbon atoms, hydroxyalkenyl of up to 19 carbon atoms, m is an integer of 1 to 3, n is an integer from 1 to 2 and x is 1 to 10.

4,062,882
PROCESS FOR REFINING CRUDE GLYCERIDE OILS BY MEMBRANE FILTRATION
Achintya Kumar Sen Gupta, Schenefeld, Germany, assignor to Lever Brothers Company, New York, N.Y.
Filed May 9, 1975, Ser. No. 575,869
Claims priority, application United Kingdom, May 16, 1974, 21813/74
Int. Cl.² C09F *5/10*
U.S. Cl. 260—428.5 **27 Claims**

1. A process for refining crude glyceride oil compositions comprising the steps of

a. diluting the composition with a non-acidic non-alcoholic organic solvent to provide a more mobile and essentially non-aqueous solution containing glycerides and components of greater effective molecular weight in the solution,
b. contacting one side of a semi-permeable, non-porous, anistropic membrane having a retention cut-off limit between 1,500 and 200,000 with the resulting solution under positive pressure from 5 to 50 kgs/cm² until constituents of the composition, of different molecular weight are separated into retentate and liquid permeate fractions in contact with the respective sides of the membrane containing the glyceride oil in substantially the same concentration in the two fractions, in solution in the said solvent,
c. recovering at least one liquid composition comprising one of said fractions and removing solvent therefrom to provide a refined product.

4,062,883
POLYMER-BOUND METALLOCARBORANE CATALYST PRODUCT AND PROCESS
M. Frederick Hawthorne, and William Kalb, both of Los Angeles, Calif., assignors to The United States of America as represented by the Secretary of the Navy, Washington, D.C.
Filed Aug. 6, 1976, Ser. No. 712,416
Int. Cl.² C07F *15/00*
U.S. Cl. 260—429 R **4 Claims**

1. A heterogeneous catalyst for the hydrogenation and isomerization of olefins, said catalyst consisting of:

the polymer-bound rhodacarborane 3-3-$(Ph_3P)_2$-3-H-4 polystyryl methyl-3,1,2-Rh $C_2B_9H_{10}$.

2. A method of forming a polymer-bound heterogeneous rhodacarborane catalyst for the hydrogenation and isomerization of olefins comprising:

reacting preformed polystyrene beads with $C_2B_9H_{11}^-$ to obtain a bead-like product, and

reacting said product with a rhodium compound to obtain said polymer-bound rhodacarborane as a final product, the general composition of said final product being a metallocarborane directly bound to said preformed bead.

4,062,884
PROCESS FOR THE PREPARATION OF DIALKYLCARBONATES
Ugo Romano, Milan, and Ugo Melis, S. Donato Milanese (Milan), both of Italy, assignors to ANIC, S.p.A., Palermo, Italy
Filed Apr. 8, 1976, Ser. No. 674,893
Claims priority, application Italy, Apr. 9, 1975, 22143/75
Int. Cl.² C07C *68/00, 68/06*
U.S. Cl. 260—463 **6 Claims**

1. A process for the preparation of a dialkylcarbonate, which consists in reacting an alcohol with a cyclic carbonate having the formula:

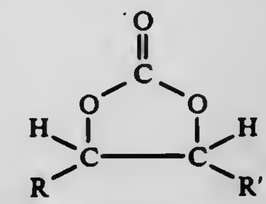

in which R and R' represent hydrogen, alkyl or alkoxy, in the in the presence of a catalyst consisting of a tertiary aliphatic amine in the temperature range of from 50° to 150° C and in the pressure of from 0.1 to 10 kg/cm².

4,062,885
PROCESS FOR PRODUCING PHTHALONITRILE
Soltan Dzhafarovich Mekhtiev, ulitsa Khagani, 26/32, blok 5, kv. 92; Ramiz Gasan Kuli Ogly Rizaev, ulitsa Sharif-zade, 148, blok 5, kv. 67; Adilya Shir Mamed Kyzy Novruzova, ulitsa Shaumiana, 59, blok 3, kv. 42; Roida Jusuf Kyzy Magerramova, ulitsa 12 Nagornaya, 123, blok 1, kv. 9; Gelbat Nagmetovich Suleimanov, ulitsa 4 Khrebtovaya, 558 kvartal, blok 1, kv. 7; Murshud Sary Ogly Rafiev, poselok 8 kilometr, ulitsa Nasimi, 33, blok 3, kv. 33; Fikret Dzhabrail Ogly Guseinov, ulitsa A. Aslanova, 115, kv. 73, and Viktor Efimovich Sheinin, ulitsa Pervomaiskaya, 251, blok 2, kv. 28, all of Baku, U.S.S.R.
Filed June 17, 1976, Ser. No. 697,253
Int. Cl.² C07C *120/14*
U.S. Cl. 260—465 C **4 Claims**

1. A process for producing phthalonitrile comprising reacting o-xylene with ammonia at a temperature ranging from 350° to 550° C in the presence of oxygen or a mixture thereof with inert gases and a catalyst selected from the group consisting of a mixture of oxides of bismuth, antimony, molybdenum and chromium taken in a molar ratio of 1–15:1–10:0.5–5:0.5–20 respectively, and a mixture of oxides of bismuth, antimony, molybdenum and vanadium taken in a molar ratio of 1–20–:1–10:0.1–15:1–20 respectively, deposited onto a support, followed by isolation of the desired product.

4,062,886
FLUORENONE CARBOXYLE ACID ESTERS
Sam R. Turner, Webster, N.Y., assignor to Xerox Corporation, Stamford, Conn.
Filed July 16, 1975, Ser. No. 596,690
Int. Cl.² C07C *79/46*
U.S. Cl. 560—21 **1 Claim**

1. Monomers of the formula

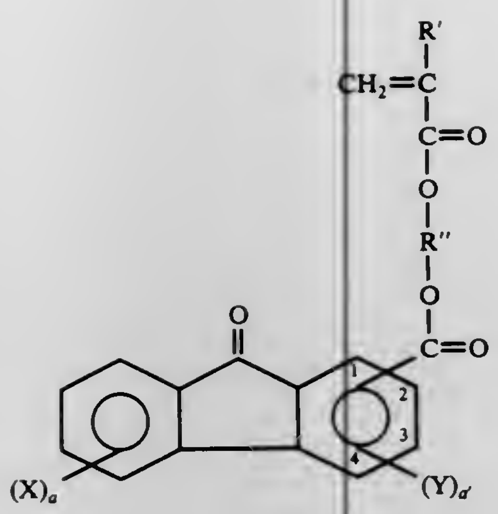

wherein
R' is hydrogen or methyl;
R'' is alkyl of 1–10 carbon atoms;
X and Y are independently selected from the group consisting of NO_2, halogen and $—CF_3$; and
a and *a'* can range from 0–3.

4,062,887
TRANSPARENT, OPTICALLY CLEAR POLY(LACTONE-URETHANE) INTERLAYERS FOR LAMINATED SAFETY GLASS
Wen-Hsuan Chang, Gibsonia, and Vernon G. Ammons, Glenshaw, both of Pa., assignors to PPG Industries, Inc., Pittsburgh, Pa.
Continuation of Ser. No. 474,645, May 30, 1974, abandoned. This application Dec. 11, 1975, Ser. No. 639,728
Int. Cl.² C07C *65/66*
U.S. Cl. 560—185 **2 Claims**
1. A poly(lactone-ester) polyol having a hydroxyl number within the range of 62 to 140 inclusive formed from ring opening a lactone having 6 to 8 carbon atoms with a hydroxy-terminated polyester having a hydroxyl number below 600 formed from an aliphatic polycarboxylic acid containing from 3 to 10 carbon atoms and a polyol selected from the class consisting of aliphatic diols free of alkyl substitution, cycloaliphatic diols and aliphatic triols containing from 2 to 10 carbon atoms and oxyalkylated products of these polyols.

4,062,888
CONTINUOUS PRODUCTION OF 2,5-DIOXO-1-OXA-2-PHOSPHOLANES
Alexander Ohorodnik, Erfstadt-Liblar; Elmar Lohmar, Rodenkirchen; Klaus Gehrmann, Erfstadt-Lechenich, and Paul Stutzke, Walberberg, all of Germany, assignors to Hoechst Aktiengesellschaft, Knapsack near Cologne, Germany
Filed July 7, 1976, Ser. No. 703,174
Claims priority, application Germany, July 12, 1975, 2531238
Int. Cl.² C07F *9/02, 9/28;* **C07C** *51/54*
U.S. Cl. 260—545 P **1 Claim**
1. In a process for the continuous production of a 2,5-dioxo-1-oxa-2-phospholane of the general formula ,04/0010

$R^1—P(O)—CHR^2—CHR^3—CO—O$ (ring closed between P and O)

from a beta-halogenoformyl-ethyl phosphinic acid halide of the general formula

$R^1XP(O)—CHR^2—CHR^3—CO—X$

in which formulae R^1 stands for an alkyl radical having 1, 2, 3 or 4 carbon atoms, or a phenyl radical, R^2 and R^3 each stands for hydrogen or CH_3, and X stands for chlorine or bromine, by reacting the said acid halide with acetic anhydride the improvement comprises introducing, into a heatable circulation reactor, an initial quantity of the desired 2,5-dioxo-1-phospholane and circulating it therein at a temperture of 110 to 190° C; separately preheating the respective beta- halogenoformylethyl phosphinic acid halide and acetic anhydride starting materials to a temperature of 60 to 160° C; mixing these starting materials together and continuously adding the resulting mixture to the material circulated in the reactor, the mixture being introduced into the lower third of the reactor; distilling off resulting acetyl halide near the head of the circulation reactor, a pressure difference of 0.1 to 5 bar being established between the point of introduction of the mixture of starting materials and the overflow level in the circulation reactor, and the material being kept circulating by the evaporating acetyl halide; and removing the resulting desired 2,5-dioxo-1-oxa-2-phospholane from the reactor at a location which is below that at which the acetyl halide is distilled off.

4,062,889
PREPARATION OF SULFONYLUREAS
Lucien Eric, 1141 Lucerne Road, Mount Royal, Montreal 305, and Francis L. Chubb, 4835 Pierre Lauzon, Pierre Fondes 910, both of Canada
Filed May 17, 1971, Ser. No. 144,271
Claims priority, application Canada, May 21, 1970, 083550
Int. Cl.² C07C *127/19*
U.S. Cl. 260—553 D **8 Claims**
1. A process or preparing a sulfonylurea selected from the group consisting of 1-[p-(2-{5-chloro-2-methoxybenzamido}ethyl)benzenesulfonyl]-3-cyclohexyl urea; 1-(4-chlorobenzenesulfonyl)-3-n-propyl urea and 1-(p-toluenesulfonyl-3-n-butyl urea which comprises reacting a sodium, potassium or lithium salt of an appropriate substituted benzene sulfonamide with an hydroxyethyl carbamate at temperatures of from 110° to 130° C in the presence of dimethylformamide solvent and recovering the desired product from the reaction medium.

4,062,890
PROCESS FOR MANUFACTURE OF ISOBUTYLIDENE DIUREA
Joseph L. Shank, Matteson, Ill., assignor to Swift Agricultural Chemicals Corporation, Chicago, Ill.
Filed May 23, 1975, Ser. No. 580,218
Int. Cl.² C07C *127/15;* **C05C** *9/00*
U.S. Cl. 260—553 R **9 Claims**
1. A process for manufacturing isobutylidene diurea comprising reacting an aqueous solution of urea with isobutyraldehyde at a pH of from about 7.0–9.0 and in the presence of from about 1–10% by weight of a glue or gelatin protein emulsifier derived from collagen and in the presence of from about 0.5–10% by weight of a polyvalent inorganic ammonium salt reaction accelerator.

4,062,891
N-FORMYL-2,3,5,6-DIBENZOBICYCLO[5.1.0]OCTAN-4-METHYLAMINE
David C. Remy, North Wales, Pa., assignor to Merck & Co., Inc., Rahway, N.J.
Division of Ser. No. 309,832, Nov. 27, 1972, abandoned, which is a continuation-in-part of Ser. No. 827,038, May 22, 1969, abandoned, which is a continuation-in-part of Ser. No. 663,930, Aug. 24, 1967, abandoned. This application Oct. 1, 1976, Ser. No. 728,677
Int. Cl.² C07C *103/37*
U.S. Cl. 260—562 P **2 Claims**
1. A compound of the formula:

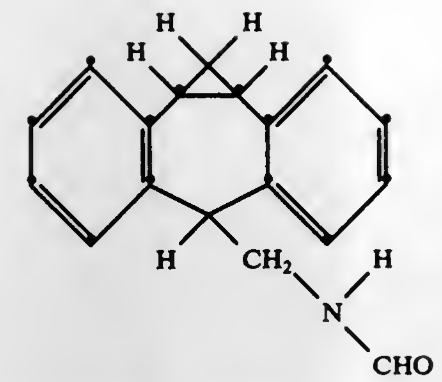

and the non-toxic pharmaceutically acceptable acid addition salts thereof.

4,062,892
INSECTICIDAL, MITICIDAL AND LEPIDOPTERICIDAL ACTIVE ISOTHIURONIUM COMPLEX ACIDS AND FREE BASES
Llewellyn W. Fancher, Orinda, and Ashley H. Freiberg, Santa Clara, both of Calif., assignors to Stauffer Chemical Company, Westport, Conn.
Division of Ser. No. 722,464, Sept. 13, 1976, which is a continuation of Ser. No. 596,483, July 16, 1975, abandoned, which is a continuation of Ser. No. 456,103, March 29, 1974, abandoned. This application Mar. 7, 1977, Ser. No. 775,063
Int. Cl.² C07C *127/26*
U.S. Cl. 260—564 E **2 Claims**
1. A compound having the formula

$$RN{=}\overset{\overset{\textstyle SR_1}{|}}{C}NH{-}R_2 \cdot X$$

wherein R can be selected from the group consisting of benzhydryl and lower alkyls having from about 5 to about 8 carbon atoms; R_1 is alkenyl; R_2 can be selected from the group consisting of alkenyl, aryl, aralkyl, methyl thiomethyl, cycloalkyl and lower alkyls, having from about 5 to about 10 carbon atoms; and X can be selected from the group consisting of insecticidally, miticidally and lepidoptericidally acceptable acids or is non-existent.

4,062,893
PROCESS FOR PREPARING N,N-DIALKYL AROMATIC AMINES
Tatsuo Kyuma, and Mikio Nakazawa, both of Kyoto, Japan, assignors to New Japan Chemical Company, Limited, Japan
Filed Mar. 1, 1976, Ser. No. 662,592
Claims priority, application Japan, Mar. 5, 1975, 50-27455
Int. Cl.² C07C *87/62*
U.S. Cl. 260—577 **10 Claims**
1. Process for preparing an N,N-dialkyl aromatic amine which comprises subjecting an aromatic amine of the formula

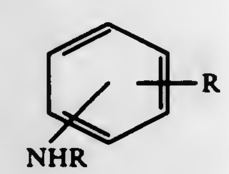

wherein R is a hydrogen atom or a lower alkyl group, to reaction with a lower alcohol in the presence of at least one catalyst selected from the group consisting of (a) sulfuric acid and (b) compounds capable of forming sulfuric acid during the reaction process, in a suitable vessel, maintaining the reaction at a temperature of about 170° to about 230° C, maintaining the reaction pressure at a pressure not higher than about 10 kg/cm² gauge which is capable of keeping the reaction phase liquid, and feeding the amine and alcohol starting materials to the reaction system in said vessel already containing at least one of the amine starting materials and N,N-dialkyl aromatic amine, the desired product, and withdrawing the resulting reaction product and unreacted lower alcohol from the system in the form of a vapor while maintaining the above-mentioned pressure.

4,062,894
DERIVATIVES OF 1-ACETYL-3,3-DIMETHYLCYCLOHEXANE
Mark A. Sprecker, Sea Bright; Manfred Hugo Vock, Locust; Frederick Louis Schmitt, Holmdel; John B. Hall, Rumson, and James Milton Sanders, Eatontown, all of N.J., assignors to International Flavors & Fragrances Inc., New York, N.Y.
Filed Aug. 11, 1976, Ser. No. 713,357
Int. Cl.² C07C *49/43*
U.S. Cl. 260—586 R **1 Claim**
1. The compound having the structure:

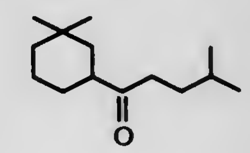

4,062,895
2-(3-PHENOXYPHENYL) PROPANOL
Winston S. Marshall, Indianapolis, Ind., assignor to Eli Lilly and Company, Indianapolis, Ind.
Continuation of Ser. No. 608,614, Aug. 28, 1975, abandoned, which is a continuation of Ser. No. 379,020, July 13, 1973, abandoned, which is a division of Ser. No. 122,999, March 10, 1971, Pat. No. 3,972,934, which is a continuation-in-part of Ser. No. 828,756, May 28, 1969, Pat. No. 3,600,437, which is a continuation-in-part of Ser. No. 823,477, May 9, 1969, abandoned, and Ser. No. 752,801, Aug. 15, 1968, abandoned. This application Feb. 14, 1977, Ser. No. 768,242
Int. Cl.² C07C *43/22*
U.S. Cl. 260—613 R **1 Claim**
1. 2-(3-phenoxyphenyl)propanol.

4,062,896
NITRO-DIPHENYL ETHERS
Takeo Yoshimoto; Keiichi Igarashi, both of Yokohama; Takeo Harayama, Kamakura; Masaaki Ura, Yokohama; Teruhiko Toyama, Fujisawa; Osamu Morikawa, Chigasaki; Yoshio Takasawa, Chigasaki, and Yoshikata Hojo, Chigasaki, all of Japan, assignors to Mitsui Toatsu Chemicals, Incorporated, Tokyo, Japan
Filed Oct. 16, 1974, Ser. No. 515,316
Claims priority, application Japan, Dec. 19, 1973, 48-141331
The portion of the term of this patent subsequent to July 13, 1993, has been disclaimed.
Int. Cl.² C07C *43/22*
U.S. Cl. 260—613 R **6 Claims**
1. 2,4-Dichloro-6-fluoro-3'-(β-chloroethoxy)-4'-nitrodiphenyl ether.

4,062,897
ACETALS DERIVED FROM NEGATIVELY SUBSTITUTED ALDEHYDES AND POLYNITRO- OR HALONITROETHANOLS
Horst G. Adolph, Beltsville, Md., assignor to The United States of America as represented by the Secretary of the Navy, Washington, D.C.
Division of Ser. No. 461,554, April 17, 1974, Pat. No. 3,946,085. This application Dec. 12, 1975, Ser. No. 640,090
Int. Cl.² C07C *43/30*
U.S. Cl. 260—615 A **5 Claims**
1. A compound selected from the group consisting of

$CHCl_2CH(OR)_2$, $CCl_3CH(OR)_2$, $CHF_2CH(OR)_2$ and $CF_3CH(OR)_2$ wherein R is selected from the group consisting of $—CH_2CYZ(NO_2)$ and $—CH_2C(NO_2)_2CH_3$ wherein Y and Z vary independently and are selected from the group consisting of Cl, F, and NO_2.

4,062,898
CONVERSION OF ACETALS
Michael Dubeck, Birmingham, and Gordon G. Knapp, Southfield, both of Mich., assignors to Ethyl Corporation, Richmond, Va.
Filed Oct. 6, 1975, Ser. No. 620,108
Int. Cl.² C07C *29/00*
U.S. Cl. 260—632 B **1 Claim**

1. Process for preparing ethanol, said process comprising reacting methylal with H_2 and CO in the presence of a catalyst system comprising cobalt iodide and ruthenium chloride, said process being conducted at a temperature of from about 150° C. to about 250° C. and at a pressure of from about 500 psig to about 5,000 psig, wherein the ratio of H_2 to CO is from about 2:1 to about 1:0.05.

4,062,899
BUTYNEDIOL MANUFACTURE
Peter Rudolf Laurer, Ludwigshafen; Wolfgang Schroeder, Bad Duerkheim; Herwig Hoffmann, Frankenthal, and Heinz Lingk, Bobenheim-Roxheim, all of Germany, assignors to BASF Aktiengesellschaft, Ludwigshafen, Germany
Division of Ser. No. 613,525, Sept. 15, 1975, Pat. No. 4,009,124. This application Aug. 9, 1976, Ser. No. 712,701
Claims priority, application Germany, Sept. 21, 1974, 2445303
Int. Cl.² C07C *29/00*
U.S. Cl. 260—635 Y **2 Claims**

1. A process for the manufacture of butynediol which comprises: reacting acetylene and aqueous formaldehyde solution in the presence of a copper-containing catalyst forming copper (I) acetylide in the presence of acetylene, wherein the copper-containing catalyst is said catalyst formed by precipitating, at pH 8 to 9.5 and a temperature of from 60° to 90° C,

a. an aqueous dilute solution of copper and aluminum salts capable of being precipitated by carbonate, the copper and aluminum being present in said solution in an atomic ratio of *m*:6, *m* being a number between 2 and 6, with
b. an aqueous alkali metal carbonate or bicarbonate solution, the atomic concentration of alkali being about twice the concentration of copper and aluminum in said solution,

whereby a composition is obtained of the formula $Cu_mAl_6(CO_3)_{0.5m}O_3—(OH)_{m+12}$, having the above definition, and thereafter drying and annealing the precipitate at 350° to 600° C.

4,062,900
PROCESS FOR PREPARING BUTANEDIOL AND/OR BUTENEDIOL
Yasuo Tanabe; Jun Toriya; Masato Sato, and Ken Shiraga, all of Kurashiki, Japan, assignors to Mitsubishi Chemical Industries Limited, Tokyo, Japan
Filed July 15, 1976, Ser. No. 705,718
Claims priority, application Japan, Aug. 7, 1975, 50-96153
Int. Cl.² C07C *29/24*
U.S. Cl. 260—637 R **8 Claims**

1. In a process for preparing butanediol or butenediol by hydrolyzing diacetoxybutane or diacetoxybutene in the presence of a cation-exchange resin having at least one sulfo group as a functional group, and recovering butanediol or butenediol from the hydrolyzed product by distillation, the improvement which comprises treating the hydrolyzed product containing butanediol or butenediol with a weak anion-exchange resin which has a primary, secondary or tertiary amine groups at a temperature of 20° to 100° C at any stage before the butanediol or butenediol are fractionated.

4,062,901
PROCESS FOR THE STABILIZATION OF METHYLENE CHLORIDE
Jacques Lolivier, and André Ryckaert, both of Brussels, Belgium, assignors to Solvay & Cie., Brussels, Belgium
Filed Mar. 30, 1973, Ser. No. 346,269
Claims priority, application Belgium, Apr. 7, 1972, 116047; Nov. 16, 1972, 124196
Int. Cl.² C07C *17/40*
U.S. Cl. 260—652.5 R **9 Claims**

1. A methylene chloride composition comprising stabilizing quantities of 2-methylfuran and one or more epoxides.

4,062,902
SELECTIVE HYDROGENATION OF CYCLOPENTADIENE USING A PRESULFIDED MOLYBDENUM CATALYST
Angelo A. Montagna, Fox Chapel, Pa., assignor to Gulf Research & Development Company, Pittsburgh, Pa.
Filed Dec. 8, 1976, Ser. No. 748,711
Int. Cl.² C07C *5/16, 13/12*
U.S. Cl. 260—666 A **8 Claims**

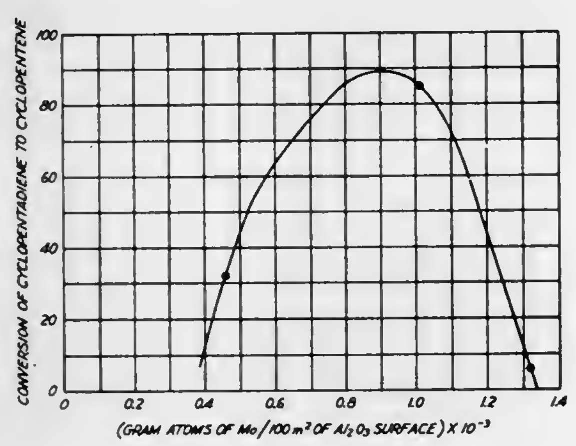

1. A process for the selective hydrogenation of cyclopentadiene to cyclopentene which comprises contacting a charge stock comprising cyclopentadiene and hydrogen with a catalyst consisting essentially of a sulfided form of molybdenum on alumina, the amount of molybdenum on the catalyst being from 0.52×10^{-3} to 1.18×10^{-3} gram atoms of molybdenum per 100 m^2 of alumina surface area.

4,062,903
PROCESS FOR ISOMERIZING ALKYLAROMATICS
Robert L. Jacobson, Pinole, Calif., assignor to Chevron Research Company, San Francisco, Calif.
Filed Sept. 24, 1976, Ser. No. 726,359
Int. Cl.² C07C *15/08*
U.S. Cl. 260—668 A **3 Claims**

1. A process for producing a first selected xylene isomer from a feedstock including a substantially greater than equilibrium concentration of ethylbenzene, a substantially less than equilibrium concentration of said selected isomer, and a weight ratio of C_8 naphthenes to C_8 alkylaromatics of less than 1:50, comprising the steps of:

a. forming an intermediate reaction mixture having a weight ratio of C_8 naphthenes to C_8 alkylaromatics of greater than 1:50 and less than 1:10 by contacting said feedstock and hydrogen with a first catalyst comprising 0.1–3 weight percent platinum, 0.1–3 weight percent rhenium and 1.25–2.0 weight percent chloride on an alumina carrier at isomerization conditions including an isomerization temperature between about 750° F and 900° F and an isomerization hydrogen pressure of about 100 psia to 250 psia;

b. forming a final hydrocarbon product mixture including a substantially equilibrium concentration of said first isomer and having a weight ratio of C_8 naphthenes to C_8 alkylaromatics of less than 1:50 by contacting said intermediate reaction mixture with a second catalyst having essentially the same composition as said first catalyst and comprising 0.1–3 weight percent platinum, 0.1–3 weight percent rhenium, and 1.25–2.0 weight percent chloride on an alumina carrier at dehydrogenation conditions including a temperature at least 25° F above said isomerization hydrogen temperature and in the range from about 775° F to 950° F and a pressure not higher than said isomerization hydrogen pressure; and

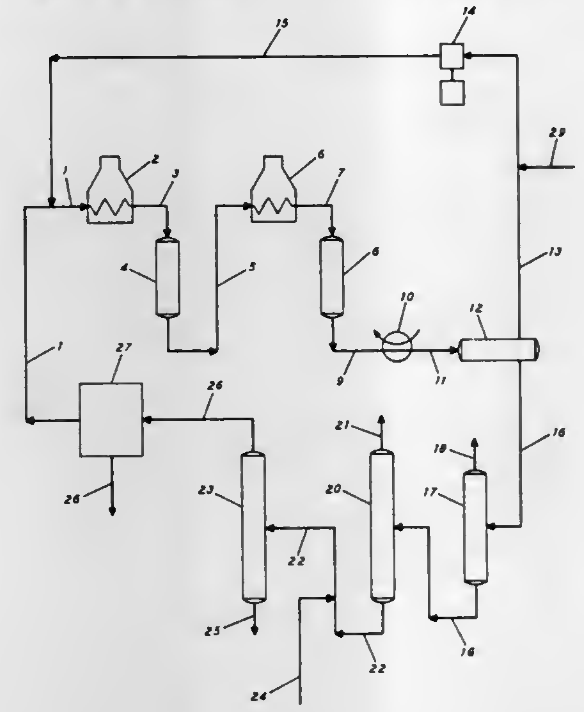

c. recovering said first isomer from said final product mixture.

4,062,904
REMOVAL OF HYDROXYL-, CARBOXY-, OR AMINO SUBSTITUENTS FROM AROMATIC COMPOUNDS USING A GROUP VI B CATALYST
Louis Schmerling, Riverside, Ill., assignor to UOP Inc., Des Plaines, Ill.
Filed Sept. 27, 1976, Ser. No. 727,207
Int. Cl.² C07C *15/00*
U.S. Cl. 260—668 R **7 Claims**

1. In a process for the removal of a hydroxyl-, carboxy- or amino- moiety from an aromatic compound substituted with said hydroxyl, carboxy or amino moiety which comprises contacting said aromatic compound with hydrogen at a temperature of from about 300° C. to about 500° C. and a pressure of from about 1 atmosphere to about 150 atmospheres and recovering the resultant aromatic compound, the improvement which comprises effecting said contacting in the presence of a catalyst consisting essentially of an oxide or sulfide of Group VIB of the Periodic Table of Elements.

4,062,905
MANUFACTURE OF LIGHT OLEFINS
Clarence D. Chang, Princeton; William H. Lang, Pennington, both of N.J., and Anthony J. Silvestri, Morrisville, Pa., assignors to Mobil Oil Corporation, New York, N.Y.
Continuation-in-part of Ser. No. 710,967, Aug. 2, 1976, which is a continuation-in-part of Ser. No. 691,959, June 1, 1976, abandoned, which is a division of Ser. No. 537,043, Dec. 27, 1974, abandoned, which is a continuation-in-part of Ser. No. 387,222, Aug. 9, 1973, Pat. No. 3,894,106. This application Dec. 6, 1976, Ser. No. 747,581
Int. Cl.² C07C *1/20*
U.S. Cl. 260—682 **12 Claims**

1. A catalytic process for converting a charge consisting essentially of methanol, dimethyl ether or mixtures thereof to a hydrocarbon product rich in ethylene and propylene which comprises contacting said charge under conversion conditions including a temperature between about 500° F and about 1100° F, a pressure from about 0.2 to 30 atmospheres and a liquid hourly space velocity of between about 0.1 and about 200 with a catalyst comprising a crystalline aluminosilicate zeolite characterized by pores, the major dimension of which is less than 6 Angstroms, further characterized by pore windows of about a size such as would be provided by 8-membered rings of oxygen atoms and the capability, under said conditions, of producing less than 20 weight percent methane in said hydrocarbon product.

4,062,906
TREATMENT OF RUBBER LATEX
Geoffrey Thomas Knight, Brickendonbury, England, assignor to The Board of the Rubber Research Institute of Malaysia, Malaysia
Filed Nov. 17, 1975, Ser. No. 632,719
Claims priority, application United Kingdom, Nov. 18, 1974, 49919/74
Int. Cl.² C08K *5/32, 5/36;* **C08L** *7/00, 7/02*
U.S. Cl. 260—739 **12 Claims**

1. In a method of treating preserved natural rubber latex which method comprises reacting rubber in the latex with a p-nitrosoaniline in the presence of a metal dialkyldithiocarbamate, the improvement which consists of including in the rubber latex, before, during or after the reaction, but before any significant coloration of the rubber latex has taken place, a hydroxylamine salt in an amount of from 0.05 to 0.5 parts by weight per 100 parts of rubber to reduce coloration of the latex on storage.

4,062,907
POLYESTER HOT MELT ADHESIVE
Bobby J. Sublett, Kingsport, Tenn., assignor to Eastman Kodak Company, Rochester, N.Y.
Continuation-in-part of Ser. No. 607,169, Aug. 25, 1976, abandoned. This application Nov. 15, 1976, Ser. No. 741,907
Int. Cl.² C08L *67/02;* **C08G** *63/66, 63/68*
U.S. Cl. 260—860 **4 Claims**

1. A polyester having an inherent viscosity of at least 0.5 consisting essentially of

A. a dicarboxylic acid component which is
 1. 25 to 65 mole percent terephthalic acid,
 2. 10 to 25 mole percent isophthalic acid,
 3. 25 to 50 mole percent adipic acid,
B. a diol component which is
 1. 60 to 25 mole percent 1,4-butanediol,
 2. 40 to 75 mole percent ethylene glycol, and
 3. 20 to 45 weight percent, based on the weight of the polyester, of a polyoxyethylene glycol selected from the group consisting of

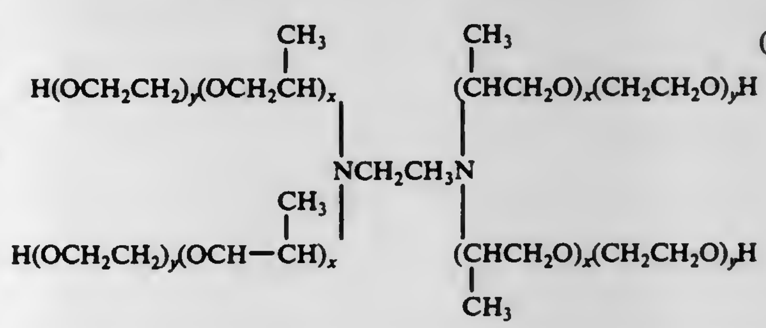
(a)

where *x* is in the range of 1 to 127 and *y* is in the range of 1 to 110,

$$R-N\left<\begin{matrix}(CH_2CH_2O)_xH\\(CH_2CH_2O)_xH\end{matrix}\right. ,\qquad (b)$$

where x is in the range of 16 to 612, and

(c) $H(OCH_2CH_2)_x-OH$

where x is in the range of 4 to 180.

3. A polyester having an inherent viscosity of at least 0.5 consisting essentially of

A. a dicarboxylic acid component which is
   1. 100 to 60 mole percent terephthalic acid,
   2. 0 to 40 mole percent adipic acid,

B. a diol component which is
   1. 70 to 30 mole percent 1,6-hexanediol,
   2. 30 to 70 mole percent ethylene glycol, and
   3. 2 to 40 weight percent, based on the weight of the polyester, of a polyoxyethylene glycol selected from the group consisting of

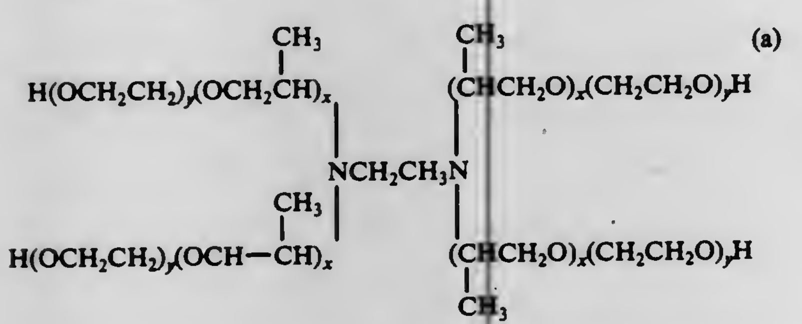
(a)

where x is in the range of 1 to 127 and y is in the range of 1 to 110,

$$R-N\left<\begin{matrix}(CH_2CH_2O)_xH\\(CH_2CH_2O)_xH\end{matrix}\right. ,\qquad (b)$$

where x is in the range of 16 to 612, and

(c) $H(OCH_2CH_2)_x-OH$

where x is in the range of 4 to 180.

4,062,908

PROCESS FOR BULK COPOLYMERIZATION OF VINYL ESTERS

Eduard M. A. A. J. van Acker, and Geert J. M. Bijl, both of Delft, Netherlands, assignors to Shell Oil Company, Houston, Tex.

Filed Apr. 9, 1976, Ser. No. 675,679

Claims priority, application United Kingdom, Apr. 9, 1975, 14574/75

Int. Cl.² C08F *2/02, 255/10*

U.S. Cl. 260—885 **5 Claims**

1. In a process for the preparation of copolymers of monoethylenically unsaturated compounds in the presence of a free-radical forming initiator by bulk copolymerization of

A. 1–50 parts by weight of vinyl esters of alpha-branched saturated aliphatic monocarboxylic acids having from 5 to 22 carbon atoms per acid molecule;

B. 1–60 parts by weight of a vinyl aromatic hydrocarbon;

C. 0–50 parts by weight of an ester, amide, and/or nitrile of an ethylenically unsaturated monocarboxylic acid having 3 to 4 carbon atoms per molecule;

D. 0–30 parts by weight of an ester of an ethylenically unsaturated dicarboxylic acid having 4–5 carbon atoms per molecule:

E. 0–20 parts by weight of an ethylenically unsaturated mono-or dicarboxylic acid, or anhydride thereof, having 3 to 5 carbon atoms per molecule, and

F. 1–20 parts by weight of a polyisobutylene having a molecular weight; of from 2,000 to 15,000 the total amount of ethylenically unsaturated monomers being 100 parts by weight, the improvement which comprises first adding component (F) and optionally a part of the initiator, to the reactor and heating to at least 150° C and then gradually adding the other monethylenically unsaturated components and remaining initiator during a period from about 3 to about 24 hours at a reaction temperature between 150° C and 200° C in two stages, the first stage comprising gradual addition of component (A), at least part of component (B), initiator, and optionally part of components (C), (D), and (E), the second stage comprising gradual addition of the remainder of component (B), initiator, and optionally the remainder of components (C), (D), and (E).

4,062,909

PHOSPHOROAMIDATES

Albert W. Morgan, Collinsville, Ill.; Ignatius Schumacher, and William Vaderlinde, both of St. Louis, Mo., assignors to Monsanto Company, St. Louis, Mo.

Division of Ser. No. 459,257, April 8, 1974. This application July 28, 1975, Ser. No. 599,571

Int. Cl.² C07C *9/24;* **C08K** *5/53*

U.S. Cl. 260—928 **4 Claims**

1. A compound of the formula

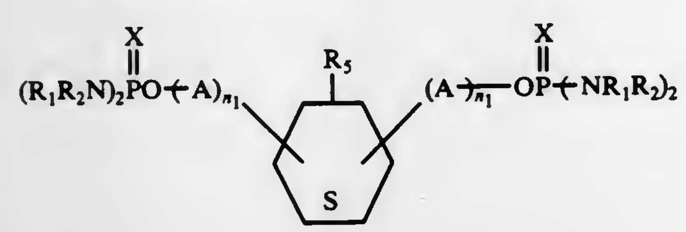

wherein

X represents oxygen or sulfur;

R_1 and R_2 individually represent an alkyl group of 1 to 10 carbon atoms, an aryl group or an alkylaryl group;

R_5 represents hydrogen, an alkyl group of 1 to 20 carbon atoms, an aryl group, an alkylaryl group or halogen;

A represents a methylene or phenylene group;

n_1 represents an integer selected from 0, 1 to 6 when A=λ methylene and 1 to 2 when A=phenylene;

and the acid and alkaline and ammonium salts thereof.

4,062,910

CARBURETOR FUEL BOWL VENT CONTROL

Jerry B. Rogerson, Dearborn, and Calvin J. Simmons, Madison Heights, both of Mich., assignors to Ford Motor Company, Dearborn, Mich.

Continuation of Ser. No. 595,977, July 14, 1975, abandoned, which is a continuation of Ser. No. 422,945, Dec. 7, 1973, abandoned. This application Feb. 7, 1977, Ser. No. 766,453

Int. Cl.² F02M *5/02*

U.S. Cl. 261—34 A **4 Claims**

1. A fuel bowl rollover anti-spill device for use in a carburetor having a float bowl and a cover closing the float bowl, the bowl containing liquid and vaporous fuel and a fuel vapor space above the fuel, an atmospheric air passage connected at one end to the cover, the cover having a hole therethrough connecting the vapor space to the air passage for the venting of fuel vapors into the air passage, a valve movably mounted in the air passage adjacent the hole for movement to a first position into the hole to close the hole and for movement to a second position out of the hole to open the hole, first means to move the valve to the second position out of the hole to permit venting of fuel vapors from the space into the passage when the carburetor and fuel bowl are in a normal attitude, and second means to move the valve to the first position into the hole to close the hole and seal against any leakage of fuel from the bowl into the atmosphere through the cover when the carburetor and fuel bowl attain an attitude permitting fuel to flow to the hole, the second means including spring means acting on the valve biasing the valve in a direction towards the

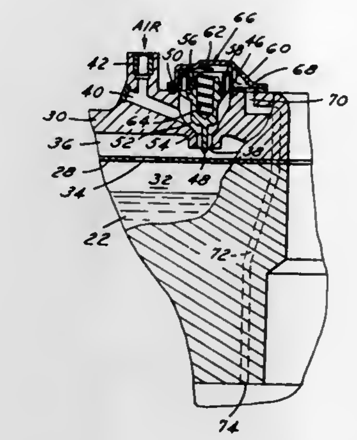

first position to close the hole, the first means including vacuum means acting on the valve to move it to the second position opening the hole in response to engine running operation to permit venting of the fuel vapor through the hole into the air passage.

4,062,911

DEVICE FOR THE PURIFICATION OF WASTE WATER

Roelf Pepping, Sneek, Netherlands, assignor to Landustrie Sneek Machinefabriek Elektrotechniek B.V., Netherlands

Filed Aug. 18, 1976, Ser. No. 715,477

Claims priority, application Netherlands, Aug. 27, 1975, 7510116

Int. Cl.² B01F *3/04*

U.S. Cl. 261—91 **1 Claim**

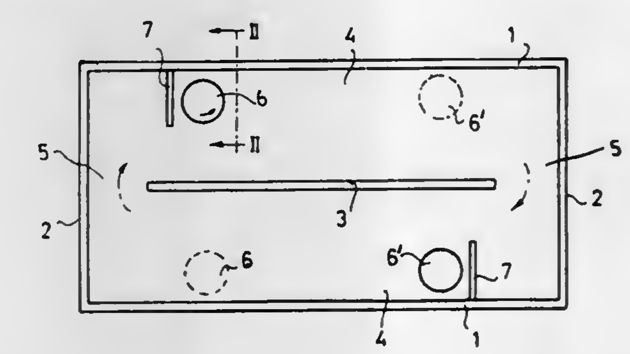

1. In a device for aerating waste liquid by the activated sludge method, in combination:

i. a first pair of opposed walls which are elongated and spaced and substantially parallel

ii. a second pair of opposed walls which are disposed transversely to said elongated walls and which are spaced and substantially parallel and are shorter than said elongated walls

iii. a partition disposed substantially parallel to and equidistantly between said elongated walls, said partition being of shorter length than said elongated walls and being disposed with its end substantially equidistantly spaced from said transverse walls, whereby the entirety of said walls and said partition together bound a horizontal closed loop path for flow of liquid, said path including elongated substantially linear side path portions defined between the partition and the respective elongated walls, and connecting path portionsbetween each end of said partition and the respective transverse walls,

iv. at least one surface aerator including an aerator body rotatable about a vertical axis, said surface aerator being disposed in one of said linear side path portions and fixedly mounted with its periphery at a small radial distance from one of said elongated walls and at a substantial distance from the partition, said surface aerator when rotated causing a flow of liquid along said linear side path portion between said periphery and said partition in a direction corresponding to the direction of rotation of the aerator, and

v. baffle means positioned in said side path portion upstream of said surface aerator, considered in the direction of liquid flow in the horizontal closed path, said baffle means extending from said elongated wall transversely of said flow path portion towards said partition, said baffle means being of such a length that it does not substantially extend into the flow of liquid between the surface aerator and said partition.--

4,062,912

STEAM CONDENSATION SYSTEM

Hans Sonnenschein, and Felix Pohl, both of Essen, Germany, assignors to Ludwig Taprogge Reinigungsanlagen fur Rohren-Warmeaustauscher, Angermund, Germany

Filed Apr. 8, 1975, Ser. No. 566,127

Claims priority, application Germany, Apr. 9, 1974, 2417163

Int. Cl.² B01F *3/04*

U.S. Cl. 261—116 **1 Claim**

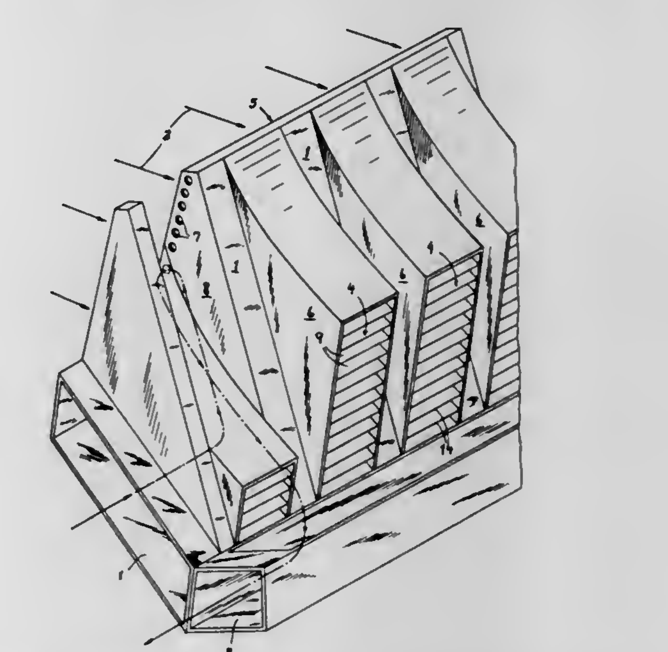

1. A steam condenser comprising:

a stack of elongated ducts, a water manifold at one side of said stack for feeding water in respective streams to said ducts;

a steam manifold at said side of said stack for feeding respective flows of steam to said ducts whereby said steam passes through each of said ducts in codirectional flow with the water therein whereby said water is progressively heated by the heat of condensation of the steam as the water and steam flow along said ducts;

means including a respective body within each of said ducts progressively constricting the steam flow cross-sections of each of said ducts from the upstream to the downstream ends thereof;

a collection manifold on the other side of said stack communicating with each of said ducts for withdrawing water therefrom, each of said ducts being generally of rectangular cross section, horizontal and formed with an upwardly convex curvature;

a flap at the downstream end of each of said ducts for limiting flow therefrom into the last-mentioned manifold exclusively to water; and

a tube connected to each of said ducts at a downstream end thereof between the respective body and flap for removing gas therefrom.

4,062,913

METHOD OF REINFORCING CONCRETE WITH FIBRES

Arvo Ivar Miller, Danderyd, and Fritz Rune Björklund, Stockholm, both of Sweden, assignors to AB Institutet for Innovationsteknik, Stockholm, Sweden

Filed July 17, 1975, Ser. No. 596,848

Int. Cl.[2] B28B *23/02*

U.S. Cl. 264—24 **6 Claims**

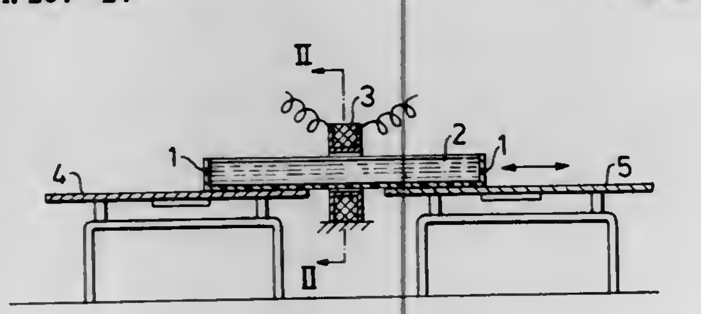

1. A method for reinforcing concrete comprising:
introducing steel fibers randomly into a mass of unset concrete, and
orienting the steel fibers in a desired direction by subjecting the steel fibers to a magnetic field.

4,062,914

METHOD AND APPARATUS FOR MONITORING THE COMPRESSION FORCE OF PELLETING PRESS RAMS

Jurgen Hinzpeter, Schwarzenbek, Germany, assignor to Fa. Wilhelm Fette GmbH, Postfach, Germany

Filed May 10, 1976, Ser. No. 684,821

Claims priority, application Germany, May 9, 1975, 2520662

Int. Cl.[2] B29C *3/06*

U.S. Cl. 264—40.1 **6 Claims**

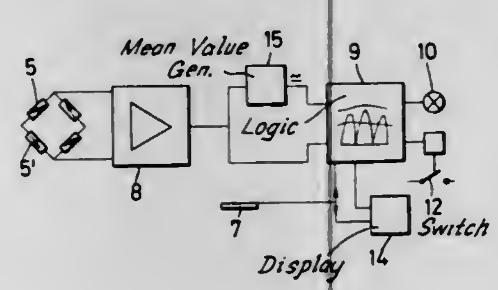

1. In a method of monitoring the pressing force of the rams of a tablet compressing machine, wherein successive measurement of the pressing forces are used to derive a means value and two fixed individual limit values the improvement comprising the steps of:
a. Continuously comparing the mean value with said two fixed theoretical limit values,
b. Comparing the maxima of the individual measured values of the pressing forces with two independently adjustable individual limit values, and
c. Automatically adjusting the individual limit values in response to fluctuations of the mean value independent of said fixed limit values.

4,062,915

STEREO RETICULATED POLYMERIC LACE-LIKE STRUCTURE AND PROCESS FOR MAKING THE SAME

Paul Thomas Stricharczuk, Solon, and Dennis Lee Lawson, Brunswick, both of Ohio, assignors to The B. F. Goodrich Company, Akron, Ohio

Filed Feb. 19, 1976, Ser. No. 659,412

Int. Cl.[2] B29D *27/00*

U.S. Cl. 264—50 **11 Claims**

1. A process for producing a stereo reticulated lace-like structure from a polymeric blend comprised of a polyurethane substantially free of cross-links, an acrylic polymer, a blowing agent and a lubricant which comprises melting said blend, passing said melted blend through an extrusion die to form a continuous film, passing said film through a zone wherein said film upon emergence from the extrusion die is subjected to the action of said blowing agent whereby said film is reticulated, quenching said reticulated film, drawing said reticulated film while in said zone to orient the same longitudinally and transversely, and removing said reticulated film from said zone to a windup zone, said polyurethane being one made by the reaction of (a) an essentially linear hydroxyl terminated polyester made by the reaction of a dicarboxylic acid having the formula

BLEND OF POLYURETHANE AND ACRYLIC TERPOLYMER

HOOC—R—COOH wherein R is an alkylene radical containing 2 to 8 carbon atoms with a glycol having the formula $HO(CH_2)_xOH$ wherein x is a number from 4 to 8; (b) a free glycol containing from 4 to 10 carbon atoms; and (c) a diphenyl diisocyanate, and said acrylic polymer being one comprising in 100 weight parts of polymer from about 40 to 97 weight parts of a lower acrylic acid ester, from about 0 to 45 weight parts of a methacrylic acid ester, and from about 3 to 15 weight parts of an α,β-olefinically unsaturated carboxylic acid having a terminal $CH_2{=}C<$ group and containing from 3 to 4 carbon atoms.

4,062,916

PRODUCTION OF TUBULAR FILM

Derek Skilling, Dumfries, Scotland, assignor to Imperial Chemical Industries Limited, London, England

Division of Ser. No. 497,512, Aug. 14, 1974, Pat. No. 3,954,360. This application Feb. 13, 1976, Ser. No. 658,044

Int. Cl.[2] B29D *23/04*

U.S. Cl. 264—95 **4 Claims**

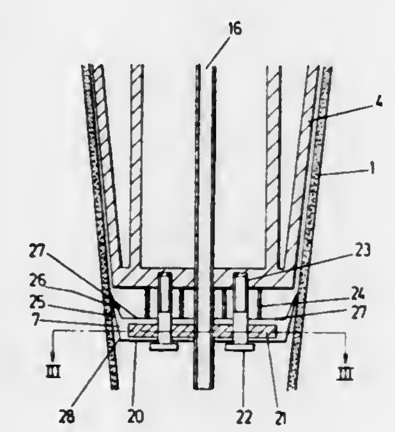

1. In a process for the production of an oriented tubular film of a thermoplastic polymeric material by extruding a tube of the material from an extrusion orifice, cooling the tube to a solid state by withdrawing the extruded tube over a cooling and sizing mandrel located within the tube, reheating the cooled tube to its stretching temperature, introducing gas under pressure, from a distributor beyond the end of the mandrel remote from the extrusion orifice, to expand the heated tube, and withdrawing the expanded tube, the improvement comprising sealing the tube by means of a cup seal, between the mandrel and distributor, said cup seal being in peripheral engagement with the internal surface of the tube, and having a peripheral region extending, in an upstream direction towards the mandrel, beyond at least a part of the upstream surface of the seal, thereby presenting a substantially concave surface to the mandrel.

4,062,917

METHOD OF MOLDING RESIN-IMPREGNATED FABRIC LAYER USING RELEASE SHEET AND ABSORBENT SHEET INSIDE EVACUATED BAG

Thomas B. Hill, Hartsdale, N.Y., and Charles Tomasino, Greensboro, N.C., assignors to Burlington Industries, Inc., Greensboro, N.C.

Filed Nov. 5, 1976, Ser. No. 739,195

Int. Cl.[2] B29D *3/02;* **B29G** *5/00*

U.S. Cl. 264—102 **4 Claims**

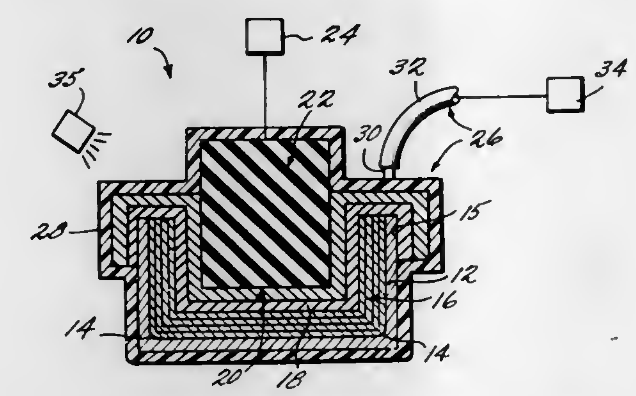

1. A method for producing a fiber reinforced plastic structural component having curved surface sections from a resin pre-impregnated partially cured fabric, comprising the steps of
a. disposing at least one layer of resin pre-impregnated partially cured fabric on a first mold section having curved portions,
b. disposing a release-coated fabric on said at least one layer of resin impregnated fabric,
c. disposing at least one layer of bleeder cloth on said release fabric to draw and hold excess resin from said resin pre-impregnated fabric, said bleeder cloth comprising a textile-like non-woven fabric comprising polyester fibers locked into place by fiber interaction, the fabric having a regular repeating pattern of entangled fiber regions of higher area density than the average area density of the fabric and interconnecting fibers which extend between the dense entangled fiber regions and which are randomly entangled with each other in said regions, said fibers of the fabric being locked into place by a three-dimensional fiber entanglement characterized by a fiber-interlock value due to fiber entanglement of at least 7 with a fiber entanglement completeness of at least 0.5, said values being determined in the absence of binder, and wherein fibers in said regions turn, wind, twist back and forth, and pass about one another in all directions of said regions in such an intricate entanglement that fibers interlock with one another when the fabric is subjected to stress, to thereby provide coherency and strength to the fabric;
d. disposing second mold section over said at least one layer of bleeder cloth,
e. applying pressure to all the components in the mold formed by said first and second mold sections, and
f. evacuating the gases through said release fabric and said at least one layer of bleeder cloth while heating all the components of the mold to completely cure the resin pre-impregnated fabric.

4,062,918

METHOD FOR PRODUCING A PRINTED THERMOPLASTIC RESIN TAPE FOR PACKAGING

Tokumitsu Nakanose, 1-17, Ikoma-cho, Kita, Nagoya, Aichi, Japan

Filed Mar. 17, 1976, Ser. No. 667,835

Claims priority, application Japan, Mar. 20, 1975, 50-33772

Int. Cl.[2] B29C *15/00*

U.S. Cl. 264—132 **5 Claims**

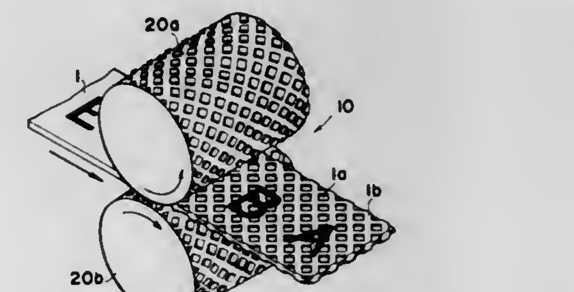

1. Method for producing a thermoplastic synthetic resin tape for packaging wherein the tape is printed thereon, comprising the steps of forming a tape-like synthetic resin base, pressing said resin base to extend it to form a continuous tape, annealing the tape, printing predetermined letters or marks on one side of said tape directly by a pair of printing rollers one of which has printing legends on the rolling surface thereof, and embossing the printed tape to effectively disorder the micelle particle orientation in the tape, thereby forming indentations on the printed and unprinted surfaces thereof.

4,062,919

METHOD OF MAKING A STRINGER ELEMENT FOR A SLIDE FASTENER

Fred H. Rojahn, Springfield, N.J., and Jose Lichtenberg, Mexico City, Mexico, assignors to U. Zip International, S. A., Panama City, Panama

Division of Ser. No. 656,397, Feb. 9, 1976, Pat. No. 4,037,295. This application May 21, 1976, Ser. No. 688,775

Int. Cl.[2] B29C *17/10;* **B29D** *5/00;* **B29F** *3/00*

U.S. Cl. 264—145 **5 Claims**

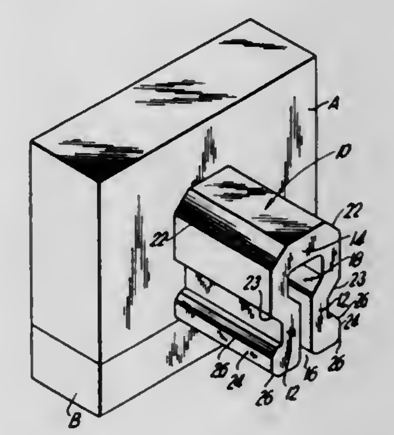

1. A method of forming a stringer for a slide fastener comprising the steps of:
extruding an elongated rigid body having two leg portions connected by a bight portion to form a generally U-shaped configuration in transverse cross section with said leg portions being rigidly maintained in a predetermined spaced apart position relative to each other;
said extruding including forming a longitudinally extending groove in an outside side surface of each of said leg portions;
said extruding further including forming said leg portions closer together at their free ends than at their ends adjacent to said bight portion to form a longitudinally extending aperture at said free ends for receiving fabric therebetween and to also form a longitudinally extending recess

adjacent to said bight portion for receiving head members of an associated stringer, said aperture and said recess being formed in direct open communication with each other;

forming a first plurality of transverse slots through closed end of said bight portion of said body to form a plurality of longitudinally spaced apart head members;

forming a second plurality of transverse slots through free ends of said leg portions of the body to form a plurality of longitudinally spaced apart legs on each side of said head members, and to form said groove of each leg portion into a plurality of groove means for receiving stitches when the stringer is sewn to the fabric;

positioning said first and said second plurality of slots in a longitudinally alternating pattern to form a pair of legs facing each other and disposed between adjacent head members with each leg of said pair being connected to each of said adjacent head members;

said forming of said first plurality of slots including forming pairs of inclined wall surfaces extending inwardly from an outside surface of said bight portion of said rigid U-shaped body so that each of said pairs of inclined wall surfaces forms a V-shaped configuration with an open end of said V-shaped wall surfaces being disposed adjacent to each other at said head members for longitudinal flexibility thereof to permit said adjacent head members to be spread apart when closing and opening the slide fastener; and

said forming of said second plurality of slots including forming sets of inclined walls extending inwardly from an outside surface of each of said leg portions of said rigid U-shaped body so that each of said sets of inclined walls forms a V-shaped configuration with an open end of said V-shaped walls being disposed adjacent to each other at said groove means associated therewith for longitudinal flexibility thereof to permit relative movement between longitudinally adjacent legs when closing and opening the slide fastener.

4,062,920

PROCESS FOR PRODUCING LITHIUM-CONTAINING FERRIMAGNETIC MATERIALS

Robert H. Lindquist, Berkeley, Calif., assignor to Chevron Research Company, San Francisco, Calif.

Continuation-in-part of Ser. No. 153,113, June 14, 1971, abandoned. This application Sept. 4, 1973, Ser. No. 394,426

Int. Cl.[2] C04B *35/26, 35/36*

U.S. Cl. 264—153 **7 Claims**

1. A process for manufacturing a material, a mass of finely divided particles of which an applied magnetic field can induce to change from a non-magnetized condition, in a sense of exhibiting no net external field, to a magnetized condition, in a sense of exhibiting an external field, which comprises:

a. reacting starting materials comprising a salt of an alkali metal, a salt of a metal in a divalent state, a salt of iron in a trivalent state, at least one of said salts being a halide, and an epoxy compound, in the presence of a solvent selected from the group consisting of lower alkanols and water, to obtain a mixture comprising a metal hydroxide-containing and solvent-containing gel;

b. freeze drying said gel to remove the majority of the solvent therefrom without significantly altering the distribution of alkali metal therein, to obtain porous particles; and

c. heating the porous particles to a temperature above 600° C. to produce the desired material.

4,062,921

SOLVENTS FOR AND PURIFICATION OF CHITIN

Paul R. Austin, Wilmington, Del., assignor to University of Delaware, Newark, Del.

Filed Feb. 19, 1976, Ser. No. 659,280

Int. Cl.[2] C07H *5/06*

U.S. Cl. 264—233 **2 Claims**

1. A process for forming films and fibers from chitin that is insoluble in dilute acids which comprises dissolving of said chitin in a solvent consisting of at least 2% lithium chloride in dimethylacetamide or N-methylpyrrolidone or mixtures thereof, casting the solution in the form of a film or fiber, removing the solvent by evaporation or by immersion in a non-solvent followed by washing in water and then drying said film or fiber.

4,062,922

PROCESS FOR PREPARING STRONTIUM FERRITES

Eugene E. Olson; Ronald Lee Clendenen, and Charles McCammon Schlaudt, all of Houston, Tex., assignors to Shell Oil Company, Houston, Tex.

Continuation-in-part of Ser. No. 390,624, Aug. 22, 1973, which is a continuation of Ser. No. 183,838, Sept. 27, 1971, abandoned. This application Feb. 23, 1976, Ser. No. 660,600

Int. Cl.[2] C04B *33/32*

U.S. Cl. 264—294 **9 Claims**

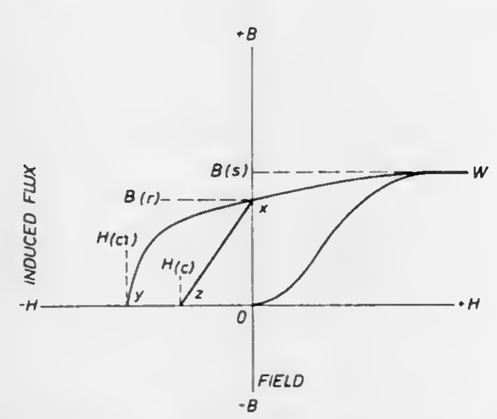

1. The process for preparing a metal ferrite of the formula $MO \cdot nFe_2O_3$ wherein M is strontium and n has a value of from 3 to 6.5, said ferrite having an average crystallite size of not greater than 2.5 microns, a normal coercive force of greater than about 3600 oersteds, a remanence of greater than about 3600 gauss and at least about 90% crystallite orientation, which comprises the steps of:

a. preparing solid particles comprising intimate agglomerates of (i) less than 0.1 micron grains of strontium oxide and (ii) less than 0.1 micron grains of ferric oxide, having a molar ratio of ferric oxide to divalent metal oxide of from 3:1 to 6.5:1;

b. maintaining the solid particles of agglomerated oxides at temperatures of from about 800° C to 1100° C for a period of from about 0.1 to about 24 hours, thereby forming less than 0.5 micron average diameter crystallites of divalent metal ferrite;

c. sintering the crystallites from about 0.1 to about 2 hours at a temperature of form 800° C to 1300° C and from about 100 to 30,000 psi into a solid ductile body having a uniform average grain size of less than 1 micron; and

d. hot forging the solid ductile body by applying a pressure of from 1000 psi to 30,000 psi and a temperature of from 800° C to 1300° C, said pressure and temperature being selected to give a strain rate of from about 1%/minute to about 500%/minute.

4,062,923

PROCESS AND APPARATUS FOR CONTINUOUS PREPARATION OF URANIUM TETRAFLUORIDE

Shingo Takada, and Ichiro Iwata, both of Kurayoshi, Japan, assignors to Doryokuro Kakunenryo Kaihatsu Jigyodan, Japan

Filed Mar. 31, 1976, Ser. No. 672,533

Claims priority, application Japan, Oct. 22, 1975, 50-127148

Int. Cl.[2] C01G *56/00*

U.S. Cl. 423—11 **5 Claims**

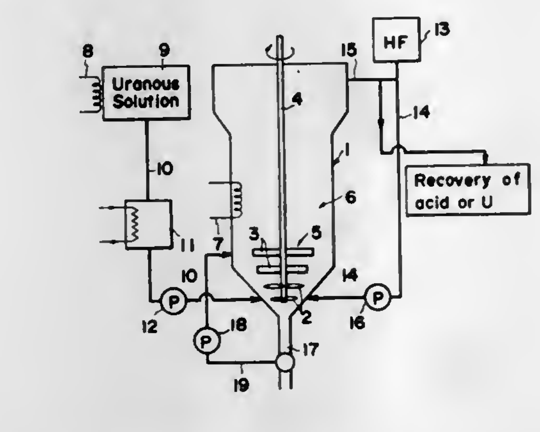

1. A process for continuous preparation of uranium tetrafluoride hydrate crystal particles of coarse size comprising the steps of:

continuously feeding a uranous solution selected from the group consisting of uranous chloride solution and uranous sulfate solution and hydrofluoric acid into the lower section of a reaction vessel to produce crystal particles of uranium tetrafluoride hydrate, said hydrofluoric acid concentration in the reaction vessel being maintained sufficiently low to avoid extreme supersaturation when hydrofluoric acid contacts the uranous solution;

floating up and suspending the crystal particles thus produced into the upper section of the reaction vessel by the action of agitation and permitting the crystal particles to grow in said upper section, the temperature in the reaction vessel being maintained within a range of from about 90° C to the boiling point of the solution in the vessel; and then

precipitating and discharging the thus grown crystal particles from the bottom of the vessel, while causing waste solution to overflow from the top of the vessel, thereby obtaining uranium tetrafluoride ¾ hydrate crystal particles of from about 40 to 140μ.

4,062,924

REDUCTIVE LEACHING OF LIMONITIC ORES WITH HYDROGEN SULFIDE

Gerald Vernon Glaum, Oakville; Charles Edward O'Neill, and Kohur Nagaraja Subramanian, both of Mississauga, all of Canada, assignors to The International Nickel Company, Inc., New York, N.Y.

Filed May 19, 1976, Ser. No. 687,910

Claims priority, application Canada, June 10, 1975, 229006

Int. Cl.[2] C01G *49/10, 49/14, 53/00*

U.S. Cl. 423—150 **8 Claims**

1. A process for extracting iron as a soluble ferrous salt from a limonitic ore comprising metal values soluble in acidic leaching media, said soluble metal values including a major amount of iron in the ferric state and a minor amount of nonferrous metals, at least one nonferrous metal value being selected from nickel and cobalt, comprising leaching a slurry of said ore at a temperature of up to about 110° C in an acidic leaching medium and feeding gaseous hydrogen sulfide to said slurry as a reducing agent for iron from the ferric to the ferrous state, said leaching medium comprising a nonoxidizing acid which forms soluble salts with said acid soluble metal values, the acid being present in sufficient amount to provide at least the stoichiometric amount required to dissolve substantially all the soluble metal values in the ore and a final pH during the leaching of up to about 2, whereby ferric iron is extracted into the leaching

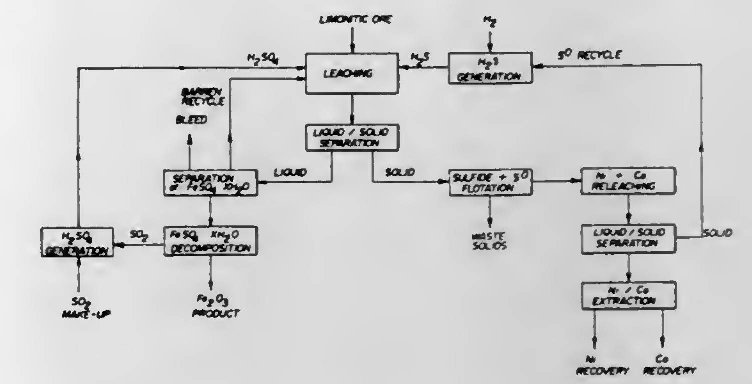

medium as a soluble ferrous salt of the acid and nickel and cobalt values are extracted into the solution.

4,062,925

OXIDATION OF VINYLIDENE HALIDES BY PERMANGANATES IN GASEOUS OR AQUEOUS PROCESS STREAMS

Donald Edward Witenhafer, North Olmsted; Charles Anthony Daniels, and Ralph Francis Koebel, both of Avon Lake, all of Ohio, assignors to The B. F. Goodrich Company, Akron, Ohio

Filed Jan. 21, 1976, Ser. No. 651,184

Int. Cl.[2] B01D *53/34*

U.S. Cl. 423—240 **8 Claims**

1. A process for oxidizing vinylidene halides in a gaseous or aqueous stream, comprising contacting at least one permanganate with at least one vinylidene halide in said stream, the permanganate being permanganic acid, at least one alkali metal permanganate, at least one alkaline earth metal permanganate or a mixture thereof, and the vinylidene halide having the formula ,02/0020

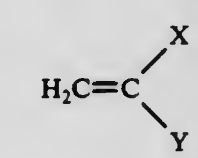

wherein X is chlorine, bromine or fluorine, and Y is hydrogen, chlorine, bromine or fluorine.

4,062,926

SULFUR DIOXIDE REMOVAL USING THERMALLY CRUSHED NAHCOLITE

John H. Knight, Aurora, Colo., assignor to The Superior Oil Company, Houston, Tex.

Filed Mar. 19, 1975, Ser. No. 559,816

The portion of the term of this patent subsequent to Apr. 19, 1994, has been disclaimed.

Int. Cl.[2] B01J *8/00;* **C01B** *17/00*

U.S. Cl. 423—244 **5 Claims**

1. A method of removing sulfur dioxide from a gas stream generated by the combustion of a sulfur-containing fuel, comprising:

generating a gas stream containing sulfur dioxide by the combustion of a sulfur-containing fuel in a high temperature combustion zone;

maintaining said high temperature combustion zone at a temperature of from about 2,000° F. to about 4,000° F. by said combustion;

introducing into said gas stream in said high temperature combustion zone an amount of nahcolite sufficient to provide a stoichiometric ratio of nahcolite to sulfur dioxide of from about 0.9 to about 3.0;

thermally crushing said particulate nahcolite to a predominant particle size of from about 0.1 to about 100 microns and a mean particle size of less than 10.8 microns by con-

tacting said particulate nahcolite with said gas stream in said high temperature combustion zone;

allowing said thermally crushed nahcolite and said gas stream to remain in contact in said high temperature combustion zone for a time effective to combine at least some of the sulfur dioxide in said gas stream with said thermally crushed nahcolite; and

removing said thermally crushed nahcolite with combined sulfur dioxide from said gas stream.

4,062,927

PROCESS FOR THE PREPARATION OF A HYDROXYLAMINE SALT

Abraham H. De Rooij; Jozef M. G. Prop, and Willem J. Wassen, all of Geleen, Netherlands, assignors to Stamicarbon, B.V., Geleen, Netherlands

Filed June 14, 1976, Ser. No. 695,552

Claims priority, application Netherlands, June 16, 1975, 7507119

Int. Cl.² C01B *21/14*

U.S. Cl. 423—387 8 Claims

1. An improved process for preparing hydroxyl-amine salts by reduction of nitrate ions or nitrogen monoxide by means of hydrogen in the presence of a noble metal catalyst in an aqueous reaction medium containing from about 2 to about 6 milligrams of molybdenum per liter by forming a complex iron-ammonium phosphate/molybdenum coprecipitate, comprising:

reducing hydroxyl amine concentration in said reaction medium to less than 0.2 mole of hydroxyl amine per kilogram prior to removing said molybdenum,

removing said 2 to 6 milligrams of molybdenum per liter from said reaction medium by adding an effective amount of iron, ammonium and phosphate salts to form a complex iron-ammonium phosphate/molybdenum coprecipitate in said reaction medium, stirring said reaction medium for a period of at least 15 minutes, forming a complex iron-ammonium phosphate/molybdenum coprecipitate in said reaction medium at a pH of over 3.5 and a temperature between 20° and 80° C., separating said complex iron-ammonium phosphate/molybdenum coprecipitate from said reaction medium,

reducing nitrate ions or nitrogen monoxide with hydrogen in the presence of a noble metal catalyst in said reaction medium to form a hydroxyl-amine salt, and

removing said hydroxyl-amine salt and reusing the residual reaction medium,

whereby the selectivity of said reduction of nitrate ions or nitrogen monoxide is enhanced.

4,062,928

PROCESS FOR THE PREPARATION OF NITRIC ACID

James M. Applegate, Granger, Utah; Stanford T. Holbrook, El Paso, Tex.; Wayne A. Proell, Seymour, Ind., and Clifford E. Selin, Salt Lake City, Utah, assignors to American Hydrocarbon Company, Salt Lake City, Utah

Filed Mar. 17, 1977, Ser. No. 778,792

Int. Cl.² C01B *21/40*

U.S. Cl. 423—392 15 Claims

1. A continuous process for the preparation of nitric acid comprising:

a. providing a reaction zone having a stripper region within said reaction zone for absorbing gaseous reaction products including nitrogen dioxide and a desorber region within said reaction zone for removing dissolved gaseous reaction products from an aqueous nitric acid solution and a concentration region between said stripper and desorber regions;

b. maintaining said reaction zone at about atmospheric pressure;

c. continuously introducing a first stream of aqueous nitric acid containing from about 10 to about 40% nitric acid into said stripper region so that first stream passes through said stripper region and said concentration region and into said desorber region at a rate sufficient to allow maintainance of a predetermined level of aqueous nitric acid in said desorber region;

d. continuously introducing gaseous ammonia oxidation products and a gaseous oxidizing agent including molecular oxygen into said concentration region;

e. reacting the ammonia oxidation products and the oxidizing agent in the presence of said first stream to produce gaseous reaction products including nitrogen dioxide and liquid reaction products including nitric acid which combine with said first stream to enrich the nitric acid content thereof;

f. maintaining the temperature of said first stream as it passes through the stripper region in the range of from about 40° F. to about 100° F. to dissolve at least a major amount of the gaseous reaction products entering the stripper region into said first stream;

g. maintaining the temperature of the aqueous nitric acid in the desorber region at a temperature of at least 130° F. to liberate at least a major amount of the dissolved gaseous reaction products therein;

h. withdrawing a second stream having the enriched nitric acid content from the liquid in the desorber region at a rate allowing maintenance of said predetermined liquid level;

i. separating said second stream into a product stream and a recycle stream;

j. continuously introducing said recycle stream into stripper region to provide said first stream; and

k. adding H_2O to said stripper region, the amount and rate of H_2O added, and product stream being separated, being coordinated to provide said first stream having a HNO_3 concentration in the range of from about 10 to about 40% by weight.

4,062,929

PRODUCTION OF HYDROGEN FLUORIDE

William Henry Thompson; Ralph Eric Worthington, both of Dublin, Ireland, and David John Stamper, Southampton, England, assignors to Fitzwilton Limited, Dublin, Ireland

Continuation-in-part of Ser. No. 389,572, Aug. 20, 1973, abandoned. This application Sept. 2, 1975, Ser. No. 609,299

Claims priority, application United Kingdom, Aug. 24, 1972, 39400/72; Jan. 29, 1973, 4373/73; Apr. 24, 1973, 19378/73; May 21, 1973, 24149/73

Int. Cl.² C01B *7/22, 33/12;* **C01C** *1/16;* **C01D** *3/02*

U.S. Cl. 423—483 11 Claims

1. A process for the production of the hydrogen fluoride from hydrofluosilicic acid comprising the following steps:

a. reacting ammonia with hydrofluosilicic acid to produce an aqueous solution of ammonium fluoride and a precipitate of silica, and separating said silica from said aqueous solution of ammonium fluoride;

b. feeding said aqueous solution of ammonium fluoride obtained in step (a) with an alkali metal fluoride, at least partly recycled from step (e), to a continuously operated reactor, wherein said ammonium fluoride and said alkali metal fluoride react to form a bifluoride of said alkali metal in aqueous solution;

c. continuously withdrawing reaction mixture from said reactor in step (b), crystallising therefrom a solid product comprising alkali metal bifluoride substantially free from ammonium fluoride, and recycling the mother liquor to said reactor in step (b), the mother liquor comprising a solution of ammonium fluoride, alkali metal fluoride and alkali metal bifluoride thereby obtaining substantially complete conversion of the ammonium fluoride fed to said reactor in step (b) from step (a);

d. drying said solid alkali metal bifluoride obtained in step (c) and decomposing at least part of it by heat to produce substantially pure hydrogen fluoride gas and solid alkali metal fluoride; and

e. recycling said alkali metal fluoride produced in step (d), together with undecomposed alkali metal bifluoride from step (d), to the reactor in step (b).

4,062,930

METHOD OF PRODUCTION OF ANHYDROUS HYDROGEN FLUORIDE

Bohdan Zawadzki, 30/2 Powstancow Wielkopolskich Str.; Anna Bulińska, 5/145 Winogrady Str., both of Poznan; Zenon Szulc, 52 Dzierzynskiego Str., Lubon; Ryszard Lońskі, 1/6 Wielkopolska Str., and Zbigniew Brzoskowski, 6/36 Matejki Str., both of Poznan, all of Poland

Continuation of Ser. No. 458,399, April 5, 1974, abandoned. This application Mar. 23, 1976, Ser. No. 669,661

Claims priority, application Poland, May 31, 1973, 162978

Int. Cl.² C01B *7/22*

U.S. Cl. 423—483 2 Claims

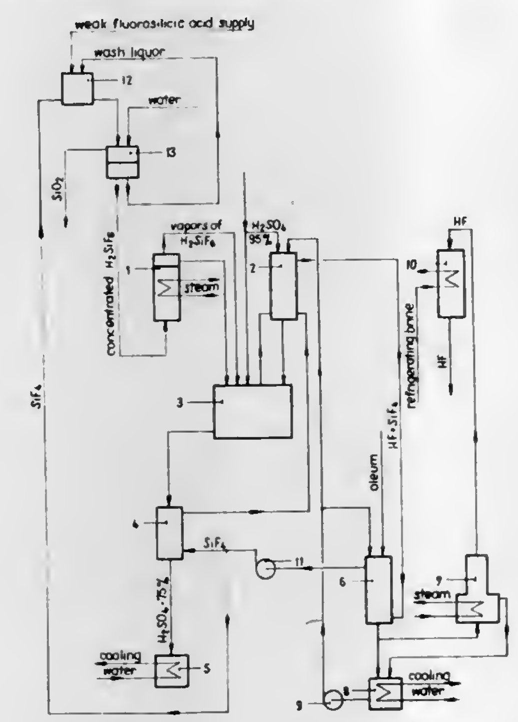

1. An improved process of producing anhydrous hydrogen fluoride from a fluorosilicic acid solution by dehydration and decomposition of said acid with sulphuric acid, which comprises the steps of:

a. heating an aqueous fluorosilicic acid solution free of silica suspension and having a concentration of 30 to 50% to the boiling point and partially evaporating said solution,

b. conveying the boiling fluorosilicic acid solution and its vapors into a closed reactor, containing sulphuric acid in such an amount that the concentration of sulphuric acid after the reaction will be 72–78%,

c. decomposing said fluorosilicic acid in said reactor at 150°–170° C to form steam, gaseous hydrogen fluoride and silicon tetrafluoride and a solution of 72–78% sulphuric acid, which may contain residual hydrogen fluoride,

d. passing gaseous silicon tetrafluoride through the sulphuric acid solution from step (c) to effect the liberation of any residual hydrogen fluoride from said solution,

e. withdrawing a gaseous stream comprising steam, hydrogen fluoride and silicon tetrafluoride from said closed reactor in step (c) and mixing with the liberated hydrogen fluoride from step (d), partially drying said gaseous stream with sulphuric acid, and then introducing said sulphuric acid into said closed reactor of step (c),

f. absorbing hydrogen fluoride from said partially dried gaseous stream from step (e) in sulphuric acid solution resulting in the formation of fluosulphonic acid and water and a partially dried gaseous stream containing silicon tetrafluoride,

g. distilling and condensing hydrogen fluoride from the sulphuric acid solution of step (f) to obtain a product containing about 99.9% HF,

h. returning the acid solution after distillation in step (g) for absorption of hydrogen fluoride in step (f) while maintaining the concentration of sulphuric acid in said solution by addition of oleum in step (f) to maintain a molar ratio of $H_2O : H_2SO_4$ of from 0.25 to 0.5,

i. absorbing the remaining part of the gaseous silicon tetrafluoride from step (f) into a fluorosilicic acid solution, thereby forming a more concentrated fluorosilicic acid solution and precipitating silica, and

j. separating the precipitated silica from step (i), from said concentrated fluorosilicic acid solution by filtration and introducing the filtered fluorosilicic acid solution into step (a).

4,062,931

PROCESS FOR PURIFYING GASES

Yoshio Nogami, 7/12, 5-chome, Tsukumodai, Suita, Osaka; Isami Ooka, 18/11, Narita-Higashimachi, Neyagawa, Osaka; Tetsuo Hamamoto, 13/27/921, Kusunoki-cho, Ashiya, Hyogo; Hirofumi Shibano, 7/7, Furuno-cho, Kawachinagano, Osaka, all of Japan; Kenji Miyao, deceased, late of Nara, Japan, by Mieko Miyao, legal heir, 3/23/3, Torimi-cho, Nara, Nara, Japan

Continuation of Ser. No. 338,418, March 6, 1973, abandoned. This application Aug. 5, 1975, Ser. No. 602,021

Int. Cl.² C01B *17/50, 17/74*

U.S. Cl. 423—522 9 Claims

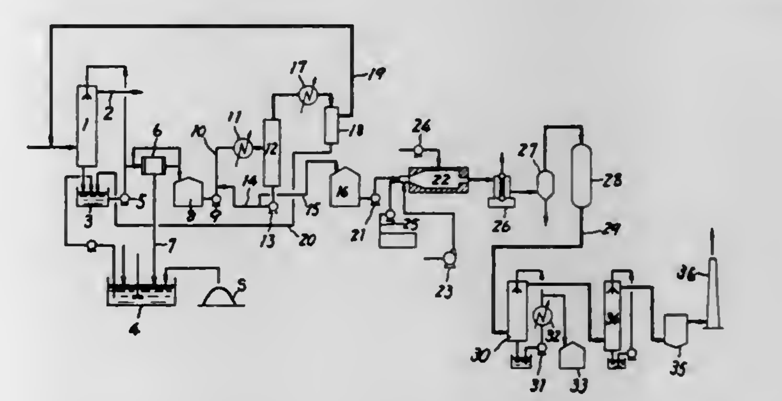

1. A method of removing HCN from a gas containing same without causing environmental pollution which comprises contacting said gas with an aqueous alkaline ammoniacal solution containing a suspension of solid sulfur to fix said HCN in said aqueous alkaline ammoniacal solution as ammonium thiocyanate, said solution having a concentration of 5 to 85% by weight of ammonium thiocyanate, burning said solution containing said ammonium thiocyanate by spraying said solution into a furnace maintained at a temperature of from 800° to 1300° C in the presence of oxygen in an amount of from 1.0 to 1.5 times the stoichiometric amount, said oxygen being charged into said furnace as air at least two stages thereof, to provide a sulfur dioxide containing gas essentially free of nitrogen oxides, recovering sulfur dioxide from said sulfur dioxide containing gas and exhausting the remaining gas to the atmosphere.

4,062,932

PROCESS FOR THE CATALYTIC OXIDATION OF HYDROGEN SULFIDE WITH SULFUR DIOXIDE

James M. Whelan, La Canada, Calif., assignor to University of Southern California, Los Angeles, Calif.

Division of Ser. No. 556,670, March 10, 1975, Pat. No. 3,976,599, which is a division of Ser. No. 194,769, Oct. 8, 1971, Pat. No. 3,926,854. This application Aug. 5, 1976, Ser. No. 712,000

Int. Cl.² C01B *17/04*

U.S. Cl. 423—574 R 1 Claim

1. A process for the oxidation of hydrogen sulfide with sulfur dioxide to produce sulfur which comprises: combining the hydrogen sulfide with a one-half molar equivalent of sulfur dioxide, and passing the hydrogen sulfide-sulfur dioxide mix-

ture over a ceramic catalyst of the following formula at a temperature between 100° C. and about 800° C.:

$W_kX_nJ_{(1-k-n)}ZO\ (\pm m)$

wherein

W is zirconium, tin or thorium, or mixture thereof;
X is an alkaline earth metal or mixture thereof;
J is scandium, yttrium, a rare-earth element or mixture thereof;
Z is a metal of the first transition series or a mixture thereof, at least 0.01% of said metal having an oxidation state other than +3;
k is a number having a value between 0 and about 0.1;
m is a number having a value of from 0 to about 0.26; and
n is a number having a value from 0 to about 0.51, provided when n has a value of 0, k has a value between 0 and about 0.05.

4,062,933

COLLOIDAL COMPOSITIONS WITH PROTECTIVE AGENTS SUITABLE FOR RADIOACTIVE LABELING

Robert G. Wolfangel, Ballwin, Mo., assignor to Mallinckrodt, Inc., St. Louis, Mo.

Filed May 27, 1975, Ser. No. 581,314

Int. Cl.² A61K *43/00, 29/00;* **B01J** *13/00*

U.S. Cl. 424—1 **28 Claims**

1. In a process wherein a dispersion of colloidal sulfur particles to which stannous ions are attached suitable for radioactive labeling and use a diagnostic agent is prepared and lyophilized and where the physical and chemical properties of said particles degrade during lyophilization or aging thereafter, the improvement comprising additionally including in said dispersion in a sufficient amount an amino acid as a protective agent to reduce degradation of the physical and chemical properties of the dispersion during lyophilization and aging thereafter.

13. In a process wherein a dispersion of denatured aggregates of serum albumin to which tin is attached, suitable for radioactive labeling and use as a diagnostic agent is prepared and lyophilized and where the physical and chemical properties of said particles degrade during lyophilization or aging thereafter the improvement comprising additionally including in a sufficient amount in said dispersion as a protective agent a mixture of a polycarboxylic acid and a disaccharide or monosaccharide.

4,062,934

X-RAY CONTRAST MEDIA

Guy Tilly; Michel Jean-Charles Hardouin, and Jean Lautrou, all of Aulnay-Sous-Bois, France, assignors to Laboratoires Andre Guerbet, Aulnay-Sous-Bois, France

Filed May 25, 1976, Ser. No. 689,929

Claims priority, application United Kingdom, June 4, 1975, 24118/75

Int. Cl.² A61K *29/02;* **C07C** *103/82*

U.S. Cl. 424—5 **3 Claims**

1. Compounds having the general formula:

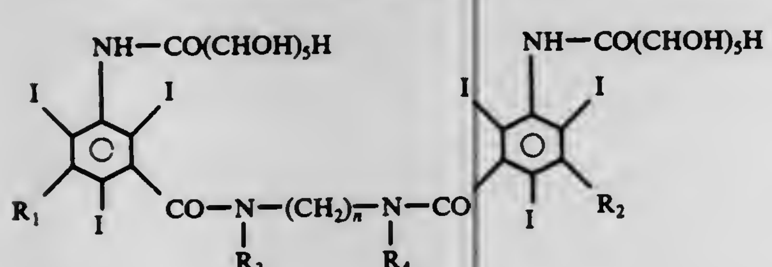

(I)

in which:

n is an integer from 0 to 4,
R_1 and R_2, independently from each other, are selected from the group consisting of a radical of the formula —$CONHR_5$, in which R_5 is selected from the group consisting of alkyl having 1–4 carbon atoms and hydroxyalkyl having 1–4 carbon atoms, and a radical of the formula

$$-\underset{\underset{R_6}{|}}{N}-COR_7$$

in which R_6 and R_7 each represent alkyl radicals having 1–4 carbon atoms, and
R_3 and R_4, independently from each other, are selected from the group consisting of hydrogen and alkyl having 1–4 carbon atoms.

3. X-ray contrast medium consisting of an aqueous solution containing 5–100 g of a compound of the formula (I) as claimed in claim 1 per 100 ml of solution.

4,062,935

IMMUNOASSAY INVOLVING THE BINDING OF RF TO THE ANTIGEN-ANTIBODY COMPLEX

Pierre Lucien Masson, Brussels, and Joseph Felix Heremans, Leuven, both of Belgium, assignors to Technicon Instruments Corporation, Tarrytown, N.Y.

Filed May 19, 1975, Ser. No. 578,698

Claims priority, application United Kingdom, May 20, 1974, 22377/74

Int. Cl.² G01N *31/14;* **B01N** *33/16*

U.S. Cl. 424—12 **31 Claims**

1. A method of analyzing a biological fluid sample for Ab, Ag, or Ab:Ag complexes therein which includes the step of adding to the sample a solution of RF to bind with Ab:Ag complexes formed or present therein, and thereafter analyzing the mixture so formed for complexes bound to RF.

4,062,936

CARRIER FOR IMMUNOCHEMICAL MEASUREMENT

Nobuhisa Ogawa, Omiya, and Masakatsu Hashimoto, Tokyo, both of Japan, assignors to Mochida Seiyaku Kabushiki Kaisha, Tokyo, Japan

Filed Nov. 3, 1975, Ser. No. 628,344

Claims priority, application Japan, Nov. 16, 1974, 49-132175

Int. Cl.² G01N *33/16, 31/02*

U.S. Cl. 424—12 **14 Claims**

1. A reaction system for immunochemical measurement comprising a carrier containing blood cells which are bound to tannic acid in a quantity of 30 to 500 mg of tannic acid per 1 ml of the blood cells, said carrier being sensitized with an antigen or antibody.

4,062,937

INSECT BITE RELIEF PREPARATION

La Verne Rea, 288 Broadway, Sp. 22, Chula Vista, Calif. 92010

Filed Mar. 12, 1976, Ser. No. 666,412

Int. Cl.² A61K *7/40, 31/195*

U.S. Cl. 424—47 **10 Claims**

1. A method of relieving the discomfort associated with an insect bite comprising topically applying to the area of the bite an effective amount of an alkali metal salt of glutamic acid in a cosmetically acceptable vehicle.

4,062,938

ALUMINUM HYDROXYBROMIDE ANTIPERSPIRANT COMPOSITIONS

Herbert H. Gary, Edison, and Chung T. Shin, Livingston, both of N.J., assignors to Bristol-Myers Company, New York, N.Y. Continuation-in-part of Ser. No. 82,784, Oct. 21, 1970, abandoned. This application Nov. 14, 1973, Ser. No. 415,575

Int. Cl.² A61K *7/38*

U.S. Cl. 424—47 **12 Claims**

1. An antiperspirant composition comprising a solvent system containing about 20% to 80% by weight of the total composition of ethyl alcohol and about from 0% to 80% by weight

of the total composition of a polyhydric compound; and about from 10 to 45% by weight of an aluminum hydroxybromide or hydrates thereof; said aluminum hydroxybromide being of formula:

$Al_2(OH)_xBr_{(6-x)}$

wherein

x is a number from 1 to 5;
and said polyhydric compound being of formula:

$R(OR')_nOH$

wherein R is hydrogen or alkyl having from 1 to 6 carbon atoms;
R' is polymethylene having 2 to 4 carbon atoms; and
n is a number from 1 to 3.

4,062,939

PERFLUOROCARBON RESINS IN A HAIR AND SCALP CONDITIONING AND CLEANSING COMPOSITION

Howard L. Scott, Philadelphia, Pa., assignor to Widner College, Chester, Pa.

Continuation-in-part of Ser. No. 430,912, Jan. 4, 1974, Pat. No. 3,911,106, which is a continuation-in-part of Ser. No. 358,897, May 10, 1973, abandoned, which is a continuation-in-part of Ser. No. 128,534, March 26, 1971, abandoned. This application Dec. 15, 1975, Ser. No. 620,330

Int. Cl.² A61K *7/06*

U.S. Cl. 424—70 **1 Claim**

1. A hair and scalp conditioning and cleansing composition comprising about 1–50% by weight of a lubricating and scouring agent selected from the group consisting of chlorotrifluoroethylene polymer, the homopolymer of hexafluoropropylene, and the copolymer of tetrafluoroethylene and hexafluoropropylene having the formula $(CF_2CF_2—CF_2CFCF_3)_n$ wherein n is an integer corresponding to the number of repeating units in the copolymerized chain, said polymers and copolymers each having a molecular weight of between about 1,000,000 and about 10,000,000, and the remainder of agents in the composition being selected from the group consisting of fatty alcohols, carboxypolymethylene, triethanolamine lauryl sulfate, methyl cellulose, lanolin, petrolatum, mineral oils and vegetable oils, and an antibacterial agent.

4,062,940

WATER-SOLUBLE COMPOSITION COMPRISING SULFADIMIDINE AND PYRIMETHAMINE

Morris E. Stolar, Tel Aviv, Israel, assignor to Abic Ltd., Israel

Filed Apr. 8, 1977, Ser. No. 786,043

Claims priority, application Israel, Apr. 14, 1976, 49412

Int. Cl.² A61K *31/79, 31/635*

U.S. Cl. 424—80 **11 Claims**

1. A water-soluble powderous composition comprising sulfadimidine sulfate, PVP and a physiologically acceptable water soluble salt of pyrimethamine.

4,062,941

METHOD FOR TREATING FUNGAL INFECTIONS USING CELL LYTIC ENZYMES

David Allen Lewis Davies, High Wycombe, England, assignor to G. D. Searle & Co. Ltd., High Wycombe, England

Filed May 24, 1976, Ser. No. 689,700

Claims priority, application United Kingdom, June 11, 1975, 25000/75

Int. Cl.² A61K *37/48*

U.S. Cl. 424—94 **6 Claims**

1. A method for treating fungal infections in animals comprising administering to an animal in need of antifungal treatment an effective amount of fungal cell lytic enzymes extracted from Coprinus or Lycoperdon.

4,062,942

INDUCTION OF OVULATION WITH PARTIALLY DESIALYLATED HUMAN CHORIONIC GONADOTROPIN

Pietro Donini, Rome, Italy, assignor to Serone Laboratories, Inc., Boston, Mass.

Filed Feb. 17, 1976, Ser. No. 658,490

Claims priority, application Italy, Feb. 17, 1975, 48202/75

Int. Cl.² A61K *35/12, 35/22, 35/48*

U.S. Cl. 424—100 **5 Claims**

1. In the method of inducing ovulation by the sequential administration of menotropins and human chorionic gonadotropin, the improvement which comprises employing partially desialylated human chorionic gonadotropin as said human chorionic gonadotropin, wherein said partially desialylated human chorionic gonadotropin has a degree of desialylation of 15 to 35%.

4,062,943

ANTIBIOTIC PRODUCTED FROM THE MICROORGANISM (*PSEUDOMONAS LINDBERGII*), ITS PREPARATION AND METHOD OF USE

George D. Lindberg, Baton Rouge, La., assignor to Board of Supervisors Louisiana State University A & M, Baton Rouge, La.

Continuation-in-part of Ser. No. 525,520, Nov. 20, 1974, abandoned, and Ser. No. 681,703, April 29, 1976, abandoned. This application Feb. 1, 1977, Ser. No. 764,576

Int. Cl.² A61K *35/74*

U.S. Cl. 424—115 **9 Claims**

1. A process for the production of an antibiotic which comprises cultivating *Pseudomonas lindbergii* (ATCC-31099) in a nutrient medium, containing sources of assimilable carbon and nitrogen, at temperatures ranging from about 15° C to about 40° C until substantial antiotic activity is imparted to said medium.

4,062,944

MIXTURE OF ANTIBIOTICS PRODUCED BY NEW SPECIES OF MICROMONOSPORA

Walter D. Celmer; Frank C. Sciavolino, both of New London; Walter P. Cullen, East Lyme, and John B. Routien, East Lyme, all of Conn., assignors to Pfizer Inc., New York, N.Y. Division of Ser. No. 581,808, May 29, 1975, Pat. No. 4,013,789, which is a division of Ser. No. 431,845, Jan. 9, 1974, Pat. No. 3,914,218. This application Dec. 16, 1976, Ser. No. 751,041

Int. Cl.² A61K *35/74*

U.S. Cl. 424—117 **1 Claim**

1. Antibiotic substance Compound 32,656 which in crystalline form dissolved in 0.01 M HCl in methanol exhibits absorption maxima in the ultraviolet light region of the spectrum at 225, 253 (inflection), 300 and 414 μ with $E_{1\%}$ values of 465, 280, 290 and 150 respectively; having the average composition by weight of 58.19% carbon, 5.97% hydrogen, 3.17% nitrogen, 3.52% sulfur and 29.15% oxygen (by difference); and when pelleted in KBr exhibits characteristic absorption in the infrared region at the following wavelengths in microns: 2.90, 3.40, 5.75, 6.05, 6.30, 6.60, 6.80, 6.95, 7.25, 7.55, 7.95, 8.65, 9.40, 10.25, 10.55, 11.35, 12.45 and 13.20.

4,062,945

POLYCYCLIC ETHER ANTIBIOTIC

Walter D. Celmer, New London; Walter P. Cullen, East Lyme; Charles E. Moppett; John R. Oscarson, both of Groton, and John R. Routien, Lyme, all of Conn., assignors to Pfizer Inc., New York, N.Y.

Division of Ser. No. 548,421, Feb. 10, 1975, Pat. No. 4,002,885. This application Mar. 1, 1976, Ser. No. 662,701

Int. Cl.² A61K *35/74*

U.S. Cl. 424—122 **5 Claims**

1. The method of controlling coccidiosis in poultry which comprises administering to poultry an effective amount for

controlling coccidiosis of antibiotic compound 38,986, or a pharmaceutically acceptable cationic salt thereof incorporated in the diet of said poultry, said antibiotic compound when in the form as the free acid having an optical rotation of $\alpha_D^{25°} = -7.5°$ at a concentration of 1% in acetone; an average composition by weight of 65.11% carbon, 9.54% hydrogen and 25.35% oxygen (by difference); and, when pelleted in KBr, exhibiting characteristic abosrption in the infrared region at the following wavelengths in microns: 2.98, 3.44, 5.75, 5.78, 6.85, 7.24, 7.98, 8.38, 8.65, 9.00, 9.23, 9.42, 9.67, 9.83, 10.10, 10.38, 10.92, 11.18, 11.45, 11.85, 13.40, 13.70, and 14.10.

4,062,946
PARASITICIDAL ANIMAL DIP COMPOSITIONS PROTECTED AGAINST MICROBIAL BUILDUP
Andrew B. Law, Levittown, Pa., assignor to Rohm and Haas Company, Philadelphia, Pa.
Filed Oct. 18, 1971, Ser. No. 190,298
Int. Cl.[2] A61K *33/36, 31/555, 31/425*
U.S. Cl. 424—134 **25 Claims**

1. An animal dip composition protected against the buildup of microorganisms which comprises a veterinary animal dip parasiticide, an acceptable carrier, and an effective amount of a compound of the formula

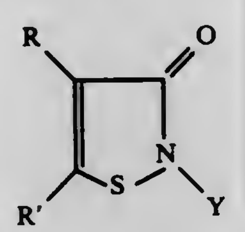

(I)

wherein

Y is a hydrogen atom, a (C_1–C_{18})alkyl group, a (C_6–C_{10})aryl group, or a (C_7–C_{10})aralkyl group,
R is a hydrogen atom, a halogen atom, or a (C_1–C_4)alkyl group,
R′ is a hydrogen atom, a halogen, or a (C_1–C_4)alkyl group, or
R and R′ can be taken together to complete a benzene ring, optionally substituted with one or more halogen atoms, nitro groups, (C_1–C_4)alkyl groups, cyano groups, or (C_1–C_4)alkoxy groups;

a salt of a compound of formula I with a strong inorganic or organic acid, or a metal salt complex of an isothiazolone having the formula

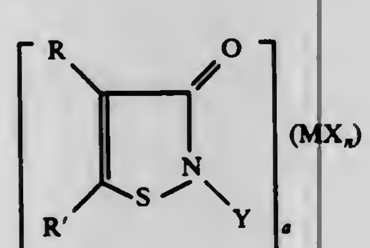

wherein

Y, R, and R′ are as defined above,
M is a cation of barium, calcium, lithium, magnesium, sodium or strontium;
X is an anion forming a compound with the cation M, in which the compound has sufficient solubility to form a complex of the invention;
a is the integer 1 or 2; and
n is an integer which for the anion X satisfies the valence of the cation M.

4,062,947
DI-N-ALKYLAMINOGLYCOSIDES, METHODS FOR THEIR MANUFACTURE AND NOVEL INTERMEDIATES USEFUL THEREIN, METHOD FOR THEIR USE AS ANTIBACTERIAL AGENTS AND PHARMACEUTICAL COMPOSITIONS USEFUL THEREFOR
John J. Wright; Peter J. L. Daniels, both of Cedar Grove; Alan K. Mallams, West Orange, and Tattanahalli L. Nagabhushan, Parsippany, all of N.J., assignors to Schering Corporation, Kenilworth, N.J.
Continuation-in-part of Ser. No. 628,637, Nov. 4, 1975, abandoned. This application July 19, 1976, Ser. No. 706,704
Int. Cl.[2] A61K *31/71;* **C07H** *15/22*
U.S. Cl. 424—180 **23 Claims**

22. The method of eliciting an antibacterial response in a warm blooded animal having a susceptible bacterial infection which comprises administering to saidd animal a non-toxic antibacterially effective amount of a 1,2′-di-N-X and a 1,6′-di-N-X derivative of a 4,6-di-O-aminoglycosyl-1,3-diaminocyclitol having antibacterial activity, said 4-O-aminoglycosyl having amino groups all of which are primary, said primary amino groups being on one or both of positions 2′ and 6′;

wherein X is a substituent selected from the group consisting of alkyl, alkenyl, cycloalkylalkyl, aralkyl, hydroxyalkyl, aminoalkyl, alkylaminoalkyl, aminohydroxyalkyl and alkylaminohydroxyalkyl, said substituent having 2 to 8 carbon atoms, the carbon in aid substituent adjacent to the aminoglycoside nitrogen being unsubstituted, and when said substituent is substituted by both amino and hydroxyl functions only one of said functions can be attached at any one carbon atom;
wherein the substituents, X, in said 1,2′-di-N-X-and in said 1,6′-di-N-X derivatives may be the same or different;
and the pharmaceutically acceptable acid addition salts thereof.

4,062,948
DIHYDROMOCIMYCIN ANTIBIOTICS
Cornelis Vos, Pijnacker; Jacobus Den Admirant, Delft; Jan Lambert van Os, Voorburg; Hendrik Marten Jongsma, Delft, and Hermanus Jacobus Kooreman, Maassluis, all of Netherlands, assignors to Gist-Brocades N.V., Delft, Netherlands
Continuation-in-part of Ser. No. 344,610, March 26, 1973, Pat. No. 3,927,211, which is a continuation-in-part of Ser. No. 170,516, Aug. 10, 1971, abandoned. This application Sept. 11, 1975, Ser. No. 612,542
Claims priority, application United Kingdom, May 16, 1975, 20926/75; July 22, 1975, 30646/75; Aug. 14, 1970, 39367/70
Int. Cl.[2] A61K *31/70;* **C07H** *7/00*
U.S. Cl. 424—180 **16 Claims**

1. A compound selected from the group consisting of dihydromocimycin of the formula

(II)

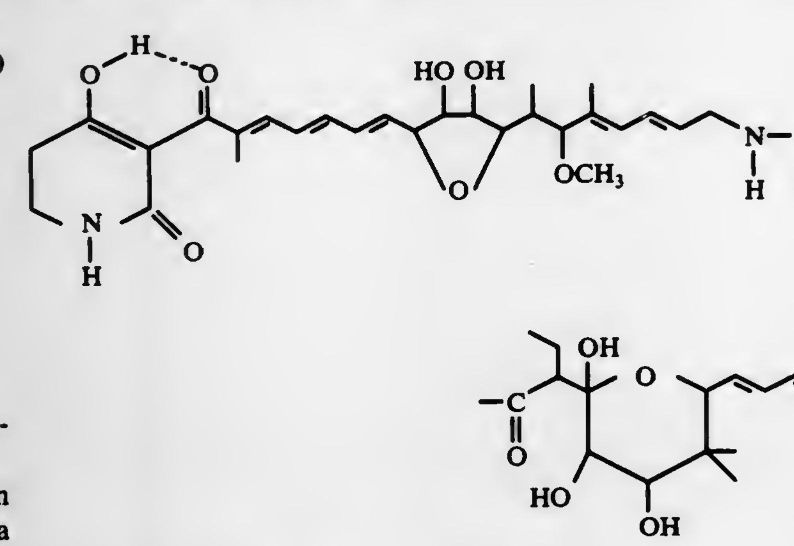

and its non-toxic, pharmaceutically acceptable salts.

6. A method of protecting pigs from Treponema disease comprising administering to pigs suffering from Treponema

disease an effective amount of at least one active compound of claim 1.

4,062,949
ABRIN COMPOSITION OF REDUCED TOXICITY
Ta-Cheng Tung, and Jung-Yaw Lin, both of Taipei, China /Taiwan, assignors to Eisai Co., Ltd., Japan
Filed Apr. 22, 1975, Ser. No. 570,372
Claims priority, application Japan, Apr. 30, 1974, 49-47593
Int. Cl.[2] A61K *31/70, 35/78*
U.S. Cl. 424—180 **1 Claim**

1. An abrin composition of reduced toxicity comprising abrin and nucleic acid, wherein the ratio of abrin to ribonucleic acid is about 1:40 by weight.

4,062,950
AMINO SUGAR DERIVATIVES
Werner Frommer; Bodo Junge; Uwe Keup; Lutz Müller; Walter Puls, and Delf Schmidt, all of Wuppertal, Germany, assignors to Bayer Aktiengesellschaft, Germany
Continuation-in-part of Ser. No. 506,550, Sept. 16, 1974, abandoned. This application Feb. 2, 1976, Ser. No. 654,627
Claims priority, application Germany, Sept. 22, 1973, 2347782
Int. Cl.[2] A61K *31/71;* **C07H** *15/20*
U.S. Cl. 424—181 **30 Claims**

1. The compound 0-{4,6-bisdesoxy-4-[1S-(1,4,6/5)-4,5,6-thihydroxy-3-hydroxymethylcyclohex-2-en-1-ylamino]-α-D-glucopyranosyl}-(1→4)-D-glucopyranose of the conformational structural formula:

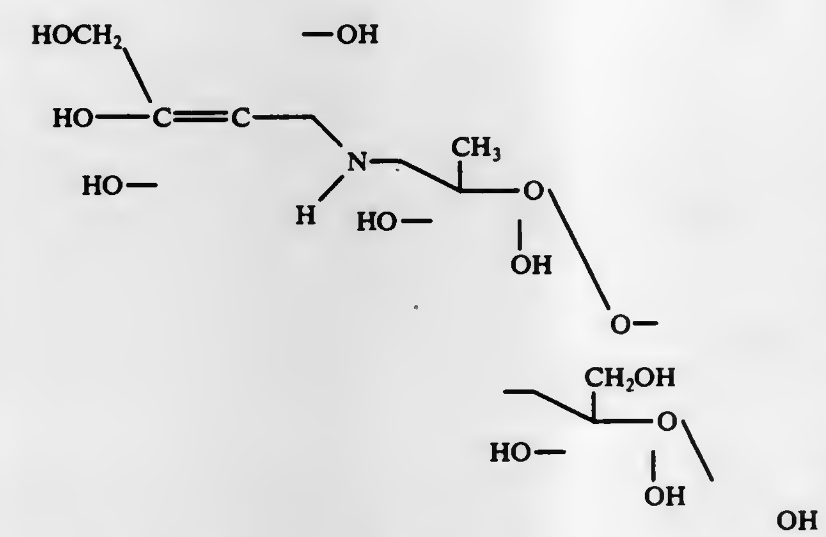

2. The method of inhibiting glucoside hydrolases in the digestive tract of humans and animals which comprises administering thereto at least an effective inhibitory amount of a compound according to claim 1.

4,062,951
ORGANOPHOSPHORUS COMPOUNDS, COMPOSITIONS CONTAINING THEM AND THEIR METHOD OF USE
Michel Sauli, Lyon, France, assignor to Philagro S.A., Lyon, France
Filed Mar. 11, 1976, Ser. No. 665,871
Claims priority, application France, Mar. 11, 1975, 75.07556
Int. Cl.[2] A01N *9/12, 9/22;* **C07D** *263/56, 277/64*
U.S. Cl. 424—200 **16 Claims**

1. An organophosphorus compound of the formula:

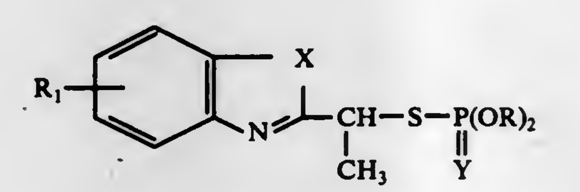

wherein R represents alkyl of from 1 to 4 carbon atoms, R_1 represents hydrogen or halogen, or alkyl, alkoxy or alkylthio, each such radical having from 1 to 4 carbon atoms, or nitro or trifluoromethyl, X is oxygen, and Y is oxygen or sulphur.

15. A method for killing insects and acarids comprising applying to said insects or acarids or to a locus expected to be infected with said insects or acarids, an amount effective to kill said insects and acarids of the compound of claim 1.

4,062,952
SUBSTITUTED BENZENEDISULFONAMIDES AS ANTHELMINTICS
Helmut H. Mrozik, Matawan, N.J., assignor to Merck & Co., Inc., Rahway, N.J.
Filed Nov. 24, 1975, Ser. No. 634,561
Int. Cl.[2] C07C *143/80;* **A01N** *9/16*
U.S. Cl. 424—228 **12 Claims**

1. A compound having the formula:

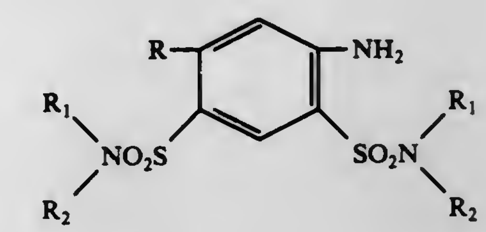

wherein each R_1 and R_2 is independently hydrogen or loweralkyl; and R is a secondary alkyl group of from 3 to 6 carbon atoms; and R is also cycloalkyl of 5 or 6 carbon atoms, or phenyl.

11. A method for the prevention and treatment of liver fluke infection which comprises administering to an animal so infected or suspected of being so infected, with a fasciolicidally effective amount of a compound having the formula:

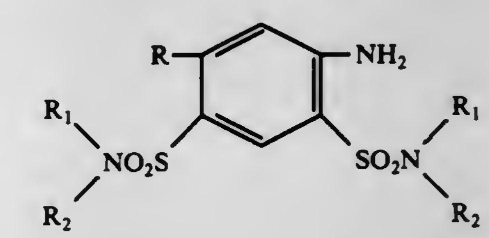

wherein each R_1 and R_2 is independently hydrogen or loweralkyl; and R is a secondary alkyl group of from 3 to 6 carbon atoms; cycloalkyl of 5 or 6 carbon atoms, or phenyl.

4,062,953
VARIOUS 2-SUBSTITUTED-1H-BENZ[DE]ISOQUINOLINE-1,3(2H)-DIONES
Peter C. Wade, Pennington, N.J., and Berthold Richard Vogt, Yardley, Pa., assignors to E. R. Squibb & Sons, Inc., Princeton, N.J.
Filed June 24, 1976, Ser. No. 699,724
Int. Cl.[2] A61K *31/47;* **C07D** *401/08*
U.S. Cl. 424—232 **17 Claims**

1. A compound of the formula

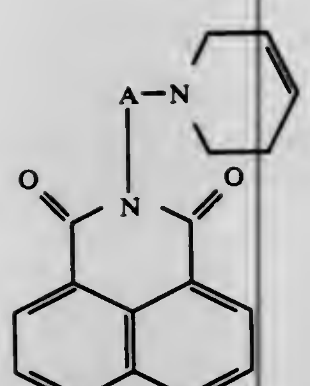

wherein A is straight chain alkylene of 2 to 4 carbons; and a pharmaceutically acceptable acid addition salt thereof.

16. A pharmaceutical composition useful for treating mammals having a protozoa infection comprising a pharmaceutically acceptable carrier and a compound or mixture of compounds of the formula:

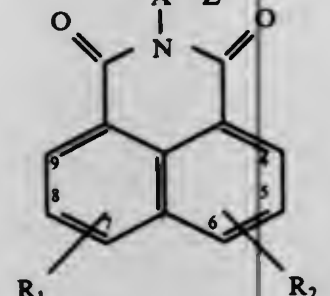

wherein Z is

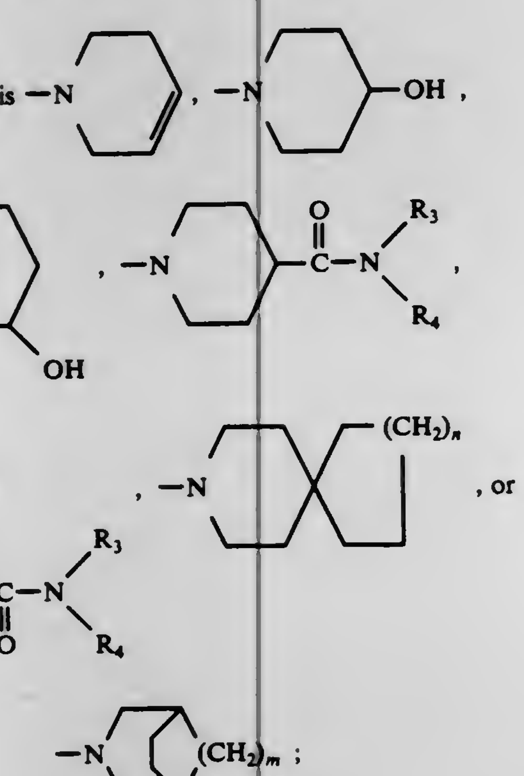

A is straight or branched chain alkylene of 2 to 6 carbons; R_1 and R_2 are located at the 7 or 8 and 5 or 6 position respectively and are independently selected from the group consisting of hydrogen, straight or branched chain alkyl of 1 to 4 carbons, straight or branched chain alkoxy of 1 to 4 carbons, Cl, Br, F, amino, nitro, cyano, and CF_3; R_3 and R_4 are independently selected from the group consisting of hydrogen and straight or branched chain alkyl of 1 to 4 carbons; *n* is 1, 2, or 3; *m* is 1 or 2; and a pharmaceutically acceptable acid addition salt thereof.

4,062,954
PROCESS FOR USING A STEROID COMPOUND
Gordon Oliver Potts, Chatham, N.Y., assignor to Sterling Drug Inc., New York, N.Y.
Filed Dec. 27, 1976, Ser. No. 753,989
Int. Cl.² A61K ***31/58***
U.S. Cl. 424—241 **2 Claims**

1. A method for disrupting pregnancy in a female mammal which comprises administering orally to said mammal, subsequent to implantation of a fertilized ovum in said mammal, an abortifaciently effective amount of 2α-cyano-4α,5α-epoxyandrostan-17β-ol-3-one or a pharmaceutically acceptable ester thereof.

4,062,955
ANALGESIC BASIC NAPHTHALENE DERIVATIVES
Derek Burn, Stoke Poges, and Richard J. Coles, Uxbridge, both of England, assignors to Glaxo Laboratories Limited, Greenford, England
Filed Oct. 28, 1975, Ser. No. 625,863
Claims priority, application United Kingdom, Nov. 4, 1974, 47589/74
Int. Cl.² A61K ***51/535;*** **C07D** ***295/12***
U.S. Cl. 424—248.56 **29 Claims**

1. A compound of the formula

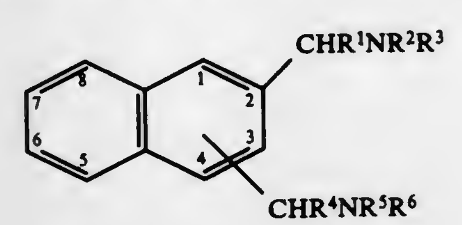

(I)

wherein R^1 and R^4 are hydrogen or phenyl; the group $CHR^4NR^5R^6$ is in the 1 or 3 position; R^2 and R^3 are C_{1-6} alkyl or monohydroxy C_{1-6} alkyl; R^5 and R^6 are hydrogen or C_{1-6} alkyl; R^2 and R^3 or R^5 and R^6 form together with the nitrogen atom piperidino, mono methyl piperidino, morpholino, 2,6-dimethyl morpholino, pyrrolidino, piperazino, N-methyl-or phenylpiperazino, tetrahydro pyridino or hexamethylene-imino, at least one of R^2 and R^3 or R^5 and R^6 being morpholino or 2,6-dimethyl morpholino; the naphthalene nucleus being unsubstituted or mono substituted by C_{1-6} alkyl, C_{1-6} alkoxy, a halogen atom or phenyl, or disubstituted at the 1 and 4 positions by halogen, at the 1 and 4 positions by C_{1-6} alkoxy or at the 5-position by a halogen atom and the 6-position by C_{1-6} alkoxy; or a pharmaceutically acceptable acid addition, or a methiodide quaternary salt, or a hydrate thereof.

5. An analgesic composition consisting essentially of a compound as defined in claim 1 together with a pharmaceutical non-toxic carrier or diluent.

8. A method of relieving pain in a patient comprising administering to said patient an effective amount of a compound as claimed in claim 1.

4,062,956
SUBSTITUTED 2-(2-HYDROXYETHYL)TETRAHYDRO-1,4 OXAZINES AND QUATERNARY SALTS THEREOF USEFUL FOR TREATING SPASMODIC SYNDROMES
Roland Yves Mauvernay, Riom; Norbert Busch, La Tourette; Jacques Moleyre, Menetrol; Jacques Simond, Chamalieres, and Andre Monteil, Gerzat, all of France, assignors to Centre Europeen de Recherches Mauvernay, Riom Cedex, France
Filed Sept. 16, 1976, Ser. No. 724,068
Claims priority, application France, Sept. 29, 1975, 75.29819
Int. Cl.² A01N ***9/00, 9/22;*** **C07D** ***265/00, 273/00***
U.S. Cl. 424—248.57 **8 Claims**

1. A compound selected from the group consisting of 2-(2-hydroxyethyl)tetrahydro-1,4-oxazines of the formula:

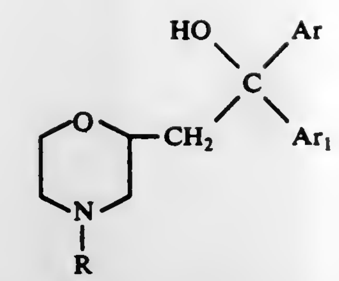

wherein *Ar* and Ar_1 are the same or different and are selected from the group consisting of unsubstituted and substituted aryl, said substituent being a halogen atom, R is lower alkyl having from 1 to 4 carbon atoms; and the quaternary salts thereof having the formula:

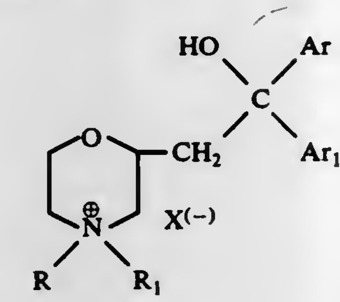

wherein *Ar*, Ar_1 and R are as defined above and R_1 is lower alkyl having from 1 to 4 carbon atoms and $X^{(-)}$ is selected from the group consisting of $Cl^{(-)}$, $Br^{(-)}$, $I^{(-)}$ and $CH_3SO_4(-)$.

7. Pharmaceutical composition for the treatment of spasmodic syndromes, notably of the smooth muscle, comprising an anti-spasmolytic effective amount of a compound of claim 1 and a pharmaceutically acceptable carrier.

4,062,957
BACTERICIDAL AND FUNGICIDAL 1,3,5 TRIALKANOL TRIAZINES
David A. Waldstein, 622 Bergen Ave., Jersey City, N.J. 07607
Division of Ser. No. 449,368, March 8, 1974, Pat. No. 3,981,998. This application June 23, 1976, Ser. No. 698,935
The portion of the term of this patent subsequent to Sept. 21, 1993, has been disclaimed.
Int. Cl.² A01N ***9/22***
U.S. Cl. 424—249 **5 Claims**

1. A bactericide and fungicide composition constituting a mixture of 1,3, 5 variegated and non-variegated trialkanol triazines of the formula

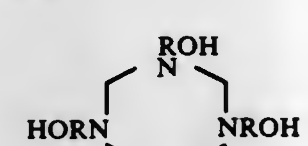

wherein each R is an alkyl moiety having from 1 to 4 carbon atoms, formed by mixing two or more monoalkanolamines having 1 to 4 carbon atoms and reacting said mixture with a stoichiometric amount of paraformaldehyde at a temperature of between 75° to 110° C under vacuum until the water produced by the reaction is substantially removed, and each of the said monoalkanolamines being present for the reaction in an amount of at least 5% by weight of the total weight of all the monoalkanolamines.

4,062,958
METHOD OF TREATING ANXIETY AND COMPOSITIONS THEREFOR
George Rodger Allen, Jr., Old Tappan, N.J.; John William Hanifin, Jr.; Daniel Bryan Moran, both of Suffern, N.Y., and Jay Donald Albright, Nanuet, N.Y., assignors to American Cyanamid Company, Stamford, Conn.
Filed Sept. 22, 1976, Ser. No. 725,598
Int. Cl.² A61K ***31/495***
U.S. Cl. 424—250 **2 Claims**

1. The method of meliorating anxiety in a mammal which comprises administering internally to said mammal an anxiolytically effective amount of 3-methyl-6-phenyl-1,2,4-triazolo[4,3-b]-pyridazine or a pharmacologically acceptable acid-addition salt thereof.

4,062,959
N-METHYL-IMIDAZOLE DERIVATIVES FOR TREATING MYCOTIC INFECTIONS
Wilfried Draber, Wuppertal; Karl Heinz Büchel, Wuppertal-Elberfeld; Erik Regel, Wuppertal-Elberfeld, and Manfred Plempel, Wuppertal-Elberfeld, all of Germany, assignors to Bayer Aktiengesellschaft, Germany
Division of Ser. No. 474,873, May 31, 1974, Pat. No. 3,934,014, which is a division of Ser. No. 310,423, Nov. 29, 1972, Pat. No. 3,887,556, which is a division of Ser. No. 120,333, March 2, 1971, Pat. No. 3,784,415. This application Feb. 28, 1975, Ser. No. 554,009
Claims priority, application Germany, Mar. 23, 1970, 2013793
Int. Cl.² A61K ***31/495***
U.S. Cl. 424—250 **12 Claims**

1. A pharmaceutical composition for treating mycotic infections in humans and animals which comprises an antimycotically effective amount of a compound of the formula:

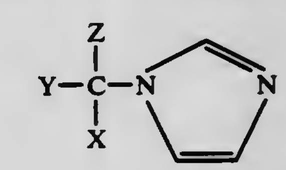

or a pharmaceutically acceptable non-toxic salt thereof, wherein

X is a heteroaromatic moiety of the formula:

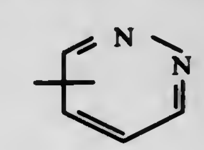

unsubstituted or substituted by chlorine,

Y is phenyl unsubstituted or substituted by alkyl of 1 to 4 carbon atoms, alkoxy of 1 to 4 carbon atoms or halogen and

Z is phenyl, in combination with a pharmaceutically acceptable non-toxic inert diluent or carrier.

4,062,960
HYPOLIPIDEMIC ALKENESULFONAMIDES
Gerald F. Holland, Old Lyme, Conn., assignor to Pfizer Inc., New York, N.Y.
Division of Ser. No. 521,445, Nov. 6, 1974, Pat. No. 3,983,107, which is a continuation-in-part of Ser. No. 422,088, Dec. 5, 1973, abandoned. This application May 24, 1976, Ser. No. 689,580
Int. Cl.² C07D ***217/26***
U.S. Cl. 424—258 **7 Claims**

1. A method for lowering elevated blood lipid levels in a hyperlipidemic mammal which comprises administering to said mammal a blood lipid level lowering amount of a compound selected from the group consisting of

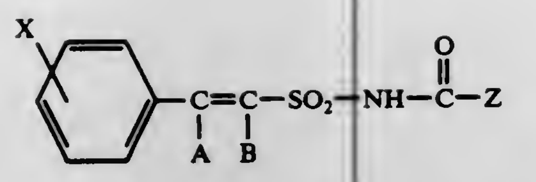

and the pharmaceutically acceptable salts thereof wherein X is selected from the group consisting of hydrogen, chloro and methyl; A and B are each selected from the group consisting of hydrogen, methyl and ethyl and Z is 1,2,3,4-tetrahydroisoquinolino.

4,062,961
PHARMACEUTICAL COMPOSITIONS AND METHODS OF INHIBITING PHENYLETHANOLAMINE N-METHYLTRANSFERASE

Carl Kaiser, Haddon Heights, N.J., and Robert G. Pendleton, Philadelphia, Pa., assignors to SmithKline Corporation, Philadelphia, Pa.

Division of Ser. No. 590,772, June 26, 1975, Pat. No. 3,988,339, which is a continuation-in-part of Ser. No. 440,925, Feb. 8, 1974, Pat. No. 3,939,164. This application Aug. 5, 1976, Ser. No. 712,125

The portion of the term of this patent subsequent to Oct. 26, 1993, has been disclaimed.

Int. Cl.² A61K *31/47*

U.S. Cl. 424—258 **8 Claims**

4. A method of inhibiting phenylethanolamine N-methyltransferase which comprises administering to an animal, in an amount sufficient to inhibit phenylethanolamine N-methyltransferase, a tetrahydroisoquinoline compound of the formula:

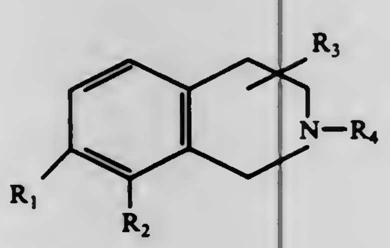

in which:

R_1 and R_2 are both trifluoromethyl or R_1 is sulfamoyl and R_2 is hydrogen and

R_3 and R_4 are hydrogen or a pharmaceutically acceptable, acid addition salt thereof.

4,062,962
SUBSTITUTED PYRIDINES AS SYSTEMIC PLANT PROTECTANTS

Robert L. Noveroske, Midland, Mich., assignor to The Dow Chemical Company, Midland, Mich.

Continuation of Ser. No. 551,820, Feb. 21, 1975, abandoned, which is a continuation-in-part of Ser. No. 393,856, Sept. 4, 1973, abandoned, which is a continuation-in-part of Ser. No. 269,792, July 7, 1972, abandoned. This application Feb. 9, 1976, Ser. No. 656,458

Int. Cl.² A01N *9/22*

U.S. Cl. 424—263 **15 Claims**

1. A method for protecting plants planted in soil containing soil-borne plant disease organisms of the genera Verticillium, Rhizoctonia, Phytophthora, Phythium and Pseudomonas for an extended time period, of a minimum of 3 weeks, from attack by said soil-borne plant disease organisms which comprises contacting plant parts with a non-phytotoxic plant protecting amount of a systemic plant protectant corresponding to the formula **,04/0010**

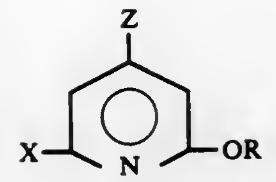

wherein X represents chloro, fluoro or bromo; Z represents trichloromethyl, dichloromethyl or dichlorofluoromethyl and R represents lower alkyl of 1 to 4 carbon atoms or phenyl, in intimate admixture with an inert adjuvant therefor.

4,062,963
N²-NAPHTHALENESULFONYL-L-ARGININE DERIVATIVES, AND THE PHARMACEUTICALLY ACCEPTABLE ACID ADDITION SALTS THEREOF

Shosuke Okamoto, Kobe; Ryoji Kikumoto; Kazuo Ohkubo, both of Machida; Shinji Tonomura, Tokyo, and Yoshikuni Tamao, Yokohama, all of Japan, assignors to Mitsubishi Chemical Industries Limited, Tokyo and Shosuke Okamoto, both of, Japan

Continuation-in-part of Ser. No. 622,390, Oct. 14, 1975, abandoned. This application Mar. 29, 1976, Ser. No. 671,435

Claims priority, application Japan, Nov. 8, 1974, 49-128774; Nov. 8, 1974, 49-128775; Nov. 29, 1974, 49-136695; Nov. 29, 1974, 49-136697; Feb. 25, 1975, 50-23268; Feb. 26, 1975, 50-23635; Mar. 5, 1975, 50-26768; Mar. 11, 1975, 50-29357; Mar. 11, 1975, 50-29358

The portion of the term of this patent subsequent to Aug. 31, 1993, has been disclaimed.

Int. Cl.² A61K *31/445;* **C07D** *211/16*

U.S. Cl. 424—267 **11 Claims**

1. N²-naphthalenesulfonyl-L-arginine amides having the formula

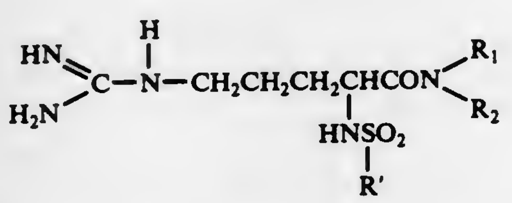

or the acid addition salts thereof with a pharmaceutically acceptable acid, wherein R_1 and R_2 are members selected from the group consisting of hydrogen and a hydrocarbon selected from the group consisting of C_{1-10}alkyl, C_{6-10}aryl, C_{7-15}aralkyl, C_{3-10}cycloalkyl and C_{4-15}cycloalkylalkyl, or R_1 and R_2 together form a polymethyleneiminyl group of 3-10 carbon atoms, the methylene groups of which are optionally substituted by one or two alkyl groups of not more than 10 carbon atoms; and R′ is 1-naphthyl substituted with a member selected from the class consisting of 2-alkylamino, 3-dialkylamino, 4-dialkylamino, 6-dialkylamino, 7-dialkylamino, 8-dialkylamino, respectively, containing not more than 20 carbon atoms, and 5-dialkylamino containing 3-20 carbon atoms; or 2-naphthyl substituted with dialkylamino containing not more than 20 carbon atoms.

11. A method for inhibiting activity and suppressing of activation of thrombin in vivo, comprising administering to a patient a pharmaceutically effective amount of a compound of claim 1.

4,062,964
ANTIFERTILITY-COMBINATIONS

Bernard George Steinetz, Jr., Franklin Lakes, N.J., assignor to Ciba-Geigy Corporation, Ardsley, N.Y.

Continuation-in-part of Ser. No. 637,333, Dec. 3, 1975, abandoned. This application Oct. 4, 1976, Ser. No. 729,571

Int. Cl.² A61K *31/445, 31/215, 31/19*

U.S. Cl. 424—267 **9 Claims**

1. A pharmaceutical antifertility composition comprising: (a) a pharmacological amount of an α-(4-aminophenyl)-α-lower

alkylglutarimide, or its lower alkanoyl derivative corresponding to Formula I

(I)

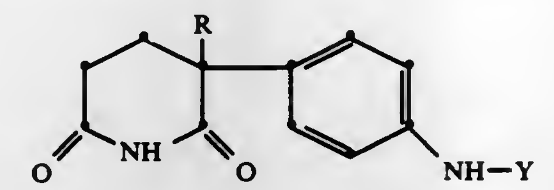

wherein R is lower alkyl and Y is hydrogen or lower alkanoyl, or a therapeutically acceptable acid addition salt thereof; (b) a pharmacological amount of a natural prostaglandin, or analogs thereof corresponding to Formula II

(II)

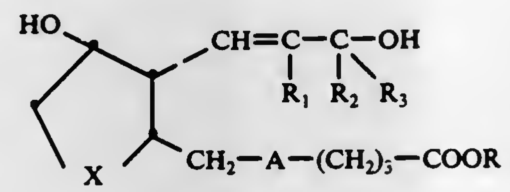

wherein A is methylene, ethylene or ethenylene, X is carbonyl, hydroxymethylene, oxa, thia, sulfinyl or sulfonyl, each of R_1 and R_2 is hydrogen or lower alkyl, each of R and R_3 are an aliphatic, cycloaliphatic, cycloaliphatic-aliphatic or araliphatic radical or R is hydrogen or one base-equivalent, whereby both of said amounts together are so selected to cause interception in mammals and (c) a pharmaceutical excipient for oral or parenteral administration.

4,062,965
QUATERNARY IMIDAZOLE COMPOUNDS AS MICROBICIDES

Ulrich Holtschmidt, and Günter Schwarzmann, both of Essen, Germany, assignors to Th. Goldschmidt AG, Germany

Filed Mar. 5, 1976, Ser. No. 664,273

Claims priority, application Germany, Mar. 11, 1975, 2510525

Int. Cl.² A61K *31/415;* **C07D** *233/58*

U.S. Cl. 424—273 R **10 Claims**

1. A process for killing microbes which comprises contacting said microbes with a microbiocidally effective amount of a compound having the formula ,02/0020

I

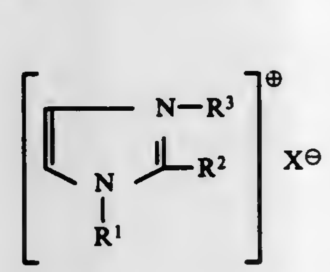

wherein R¹ is a straight-chain alkyl group having 8 to 18 carbon atoms, R² is a straight-chain alkyl group having 1 to 3 carbon atoms, R³ is a straight-chain alkyl group having 8 to 16 carbon atoms, and X is chlorine or bromine.

4,062,966
1-ARYL-2-(1-IMIDAZOLYL) ALKYL ETHERS AND THIOETHERS

Geoffrey E. Gymer, Sandwich, England, assignor to Pfizer Inc., New York, N.Y.

Filed Apr. 12, 1976, Ser. No. 676,104

Claims priority, application United Kingdom, Apr. 30, 1975, 17922/75

Int. Cl.² C07D *409/12;* **A61K** *31/415*

U.S. Cl. 424—273 R **18 Claims**

1. A 1-aryl-2-(1-imidazolyl)alkyl ether or thioether having the formula:

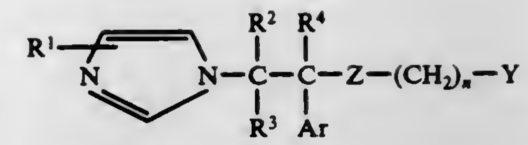

and the pharmaceutically acceptable acid addition salts thereof wherein R¹, R², R³ and R⁴ are each hydrogen or alkyl of from 1 to 6 carbon atoms; Ar is phenyl, substituted phenyl, said substituents being halogen, alkyl of from 1 to 6 carbon atoms or alkoxy of from 1 to 6 carbon atoms, thienyl or halothienyl; Z is oxygen or sulfur; n is 1 or 2; and Y is thienyl or substituted thienyl group, said substituents being halogen, alkyl of from 1 to 6 carbon atoms or alkoxy of from 1 to 6 carbon atoms.

18. A method of treating fungal infections in animals which comprises parentally or orally administering to an animal in need of such treatment an antifungal effective amount of a compound as claimed in claim 1.

4,062,967
BIS-GUANIDINO-ALKANE COMPOUNDS

Graham John Durant, and Charon Robin Ganellin, both of Welwyn Garden City, England, assignors to Smith Kline & French Laboratories Limited, Welwyn Garden City, England

Division of Ser. No. 542,971, Jan. 22, 1975, Pat. No. 3,968,227. This application Apr. 20, 1976, Ser. No. 678,563

Claims priority, application United Kingdom, Feb. 7, 1974, 5596/74

Int. Cl.² A61K *31/415;* **C07D** *233/64*

U.S. Cl. 424—273 R **12 Claims**

1. A compound of the formula:

$$R_1NH-\overset{X_1}{\overset{\|}{C}}-W-(CH_2)_q-W-\overset{X_2}{\overset{\|}{C}}-NHR_2$$

wherein R_1 and R_2, which may be the same or different, each represent a grouping of the structure:

$$\text{Het} - (CH_2)_mZ - (CH_2)_n-$$

wherein Het is imidazole which is attached at a ring carbon and which is optionally substituted by lower alkyl or halogen; Z is sulphur or a methylene group; m is 0, 1 or 2; n is 2 or 3 and the sum of m and n is 3, 4 or when Y is other than hydroxyl, 2; X_1 and X_2, which may be the same or different, are each NY wherein Y is hydroxy, cyano, $CONH_2$ or SO_2R_3 or one of X_1 and X_2 is NH or N-lower alkyl; R_3 is lower alkyl, phenyl, tolyl, trifluoromethyl or amino; W is NH; and q is an integer from 2 to 8; or a pharmaceutically acceptable acid addition salt thereof.

12. A method of inhibiting H-2 histamine receptors, said H-2 histamine receptors being those histamine receptors which are not inhibited by mepyramine but are inhibited by burimamide, which comprises administering to an animal in need of inhibition of said H-2 histamine receptors in an effective amount to inhibit said H-2 histamine receptors a compound of claim 1.

4,062,968

INSECTICIDAL SUBSTITUTED ACETATE COMPOUNDS

Keimei Fujimoto, Kobe; Nobuo Ohno, Toyonaka; Yoshitoshi Okuno, Toyonaka; Toshio Mizutani, Toyonaka; Isao Ohno, Minoo; Masachika Hirano, Toyonaka; Nobushige Itaya, Ikeda, and Takashi Matsuo, Amagasaki, all of Japan, assignors to Sumitomo Chemical Company, Limited, Osaka, Japan

Division of Ser. No. 387,301, July 11, 1973, Pat. No. 3,996,244. This application July 16, 1975, Ser. No. 596,334

Claims priority, application Japan, July 11, 1972, 47-69805

Int. Cl.^{2} A01N *9/00*

U.S. Cl. 424—275 **27 Claims**

1. A substituted acetate compound of the formula

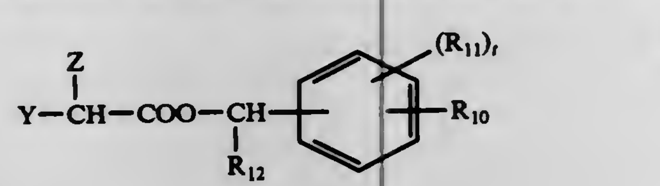

(I)

wherein Y is selected from the group consisting of the formulae:

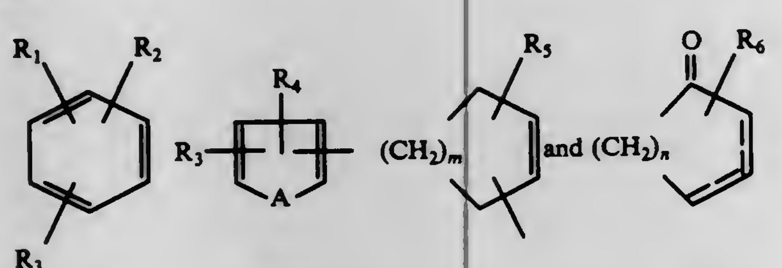

(II) (III) (IV) (V)

in which R_1 and R_2 are individually hydrogen, halogen, cyano, nitro, lower alkyl, lower alkenyl, lower alkynyl, lower alkoxy, lower alkoxyalkyl, halogen-substituted lower alkyl, halogen-substituted lower alkenyl, halogen-substituted lower alkynyl, lower alkylthio, lower alkylsulfoxyl, C_2–C_4 alkanoyl, C_2 alkanoyloxy, lower alkoxycarbonyl, lower alkenyloxycarbonyl, lower alkynyloxycarbonyl, methylenedioxy, tetramethylene or trimethylene group R_3 and R_4 are individually hydrogen, halogen, cyano, nitro, lower alkyl, lower alkenyl, lower alkynyl, lower alkoxy, lower alkoxyalkyl, halogen-substituted lower alkyl, halogen-substituted lower alkenyl, halogen-substituted lower alkynyl, lower alkylthio, lower alkylsulfoxyl, C_2–C_4 alkanoyl, lower alkoxycarbonyl, lower alkenyloxycarbonyl or lower alkynyloxycarbonyl group; A represents an oxygen atom or a sulfur atom; R_5 represents hydrogen, halogen, cyano, nitro or lower alkyl group; m is an integer of from 1 to 3; R_6 represents hydrogen, halogen, cyano, nitro or lower alkyl group; n is an integer of from 1 to 3; and the dotted line in the formula (V) represents a double bond present at a position conjugated or non-conjugated with the ketone (C=O), or Y represents a substituted ethylene group of the formula (VI)

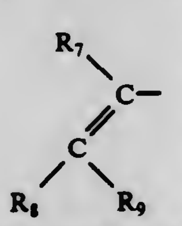

(VI)

in which R_7, R_8 and R_9 constitutes a plane together with the double bond at β–γ position of the ester group, and are individually hydrogen, lower alkyl, lower alkenyl, lower alkynyl, halogen, Z represents a straight or branched lower alkyl, lower alkenyl, lower alkynyl, lower alkoxy, cyano, halogen-substituted lower alkyl, halogen-substituted lower alkenyl group or an alicyclic group having 3 to 7 carbon atoms; in which R_{10} represents an allyl, propargyl, benzyl, thenyl, furylmethyl, phenoxy or phenylthio group; R_{11} represents hydrogen, methyl, trifluoromethyl or halogen R_{10} and R_{11} may, when they are bonded to each other at terminals, form a trimethylene or tetramethylene group; R_{12} represents hydrogen, ethynyl or cyano; t is an integer of from 1 to 2.

25. An insecticidal and miticidal composition comprising an insecticidally and miticidally effective amount of at least one substituted acetate compound as defined in claim 1 and an inert carrier.

4,062,969

DIOXANE OXIME COMPOUNDS AND PESTICIDAL DIOXANE CARBAMOYLOXIME DERIVATIVES

Themistocles D. J. D'Silva, South Charleston, W. Va., assignor to Union Carbide Corporation, New York, N.Y.

Filed June 25, 1976, Ser. No. 699,960

Int. Cl.^{2} A01N *9/28*

U.S. Cl. 424—278 **21 Claims**

1. A compound of the formula

wherein:

R_1, R_2, R_3, R_4, R_5 and R_6 are individually hydrogen or alkyl;

Z is hydrogen or

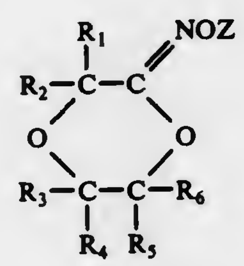

wherein:

R_7 and R_8 are individually hydrogen or alkyl; and when R_7 is alkyl, R_8 may also be alkanoyl or haloalkanoyl;

with the proviso that R_1, R_2, R_3, R_4, R_5, R_6, R_7 and R_8 individually may not include more the eight aliphatic carbon atoms.

10. An insecticidal and miticidal composition comprising an acceptable carrier and as the active toxicant an insecticidally or miticidally effective amount of a compound of the formula

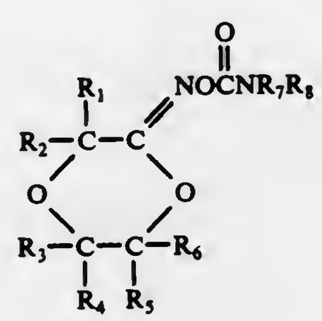

wherein:

R_1, R_2, R_3, R_4, R_5 and R_6 are individually hydrogen or alkyl;

R_7 and R_8 are individually hydrogen or alkyl; and when R_7 is alkyl, R_8 may also be alkanoyl or haloalkanoyl;

with the proviso that R_1, R_2, R_3, R_4, R_5, R_6, R_7 and R_8 individually may not include more than eight aliphatic carbon atoms.

16. A method of controlling insects and mites which comprises subjecting them to an insecticidally or miticidally effective amount of a compound of the formula:

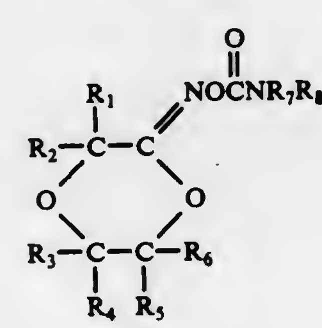

wherein:

R_1, R_2, R_3, R_4, R_5 and R_6 are individually hydrogen or alkyl;

R_7 and R_8 are individually hydrogen or alkyl; and when R_7 is alkyl, R_8 may also be alkanoyl or haloalkanoyl;

with the proviso that R_1, R_2, R_3, R_4, R_5, R_6, and R_7 and R_8 individually may not include more than eight aliphatic carbon atoms.

4,062,970

ZEARALIN ETHERS

Mohammed T. Shipchandler, Terre Haute, Ind., assignor to IMC Chemical Group, Inc., Terre Haute, Ind.

Filed July 29, 1976, Ser. No. 709,694

Int. Cl.^{2} A61K *31/335;* **C07D** *313/00*

U.S. Cl. 424—279 **8 Claims**

1. A compound having the structural formula ,03/0010

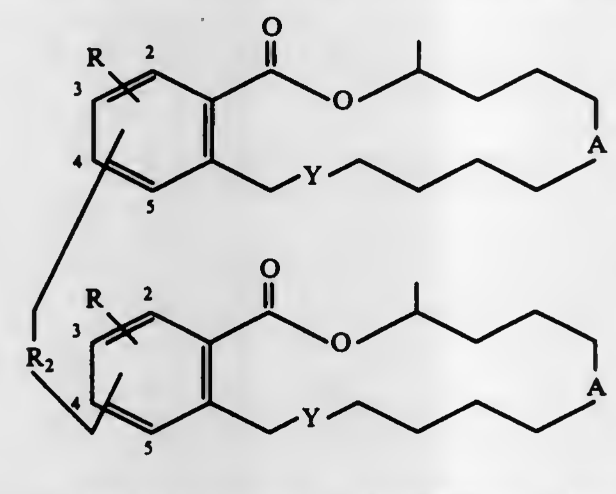

wherein Y may be a single bond or a double bond; A is selected from the group consisting of —CH_2—, >C=O, and >CH-OR_1; R represents substituents on each of the aromatic rings in either the 2 or 4 positions, and is selected from the group consisting of —H and —OR_1; R_1 is selected from the group consisting of lower alkyl of from 1 to about 6 carbon atoms, lower acyl of from 1 to about 6 carbon atoms, monocyclic aryl of about 6 to 8 carbon atoms, monocyclic aralkyl in which the alkyl group has 1 to about 5 carbon atoms and the aryl group has about 6 to 8 carbon atoms; R_2 represents a substituent common to each of the aromatic rings at either of the 2 or 4 positions which are not substituted by R, and is represented by the formula —OR_3O—, wherein R_3 is a straight chain or branched chain hydrocarbon of from 1 to about 16 carbon atoms; and the substituents on the 3 and 5 positions are selected from the group consisting of H and halogen atoms.

7. An animal feed comprising a nutrient ration and a growth promoting amount of the compound of claim 1.

4,062,971

S-ALKYL CARBONIMIDOTHIOATES AND THEIR USE AS APHICIDES

Harry Tilles, El Cerrito, Calif., assignor to Stauffer Chemical Company, Westport, Conn.

Filed Aug. 2, 1976, Ser. No. 710,505

Int. Cl.^{2} A01N *9/00;* **C07C** *154/00*

U.S. Cl. 424—298 **195 Claims**

1. A compound having the formula

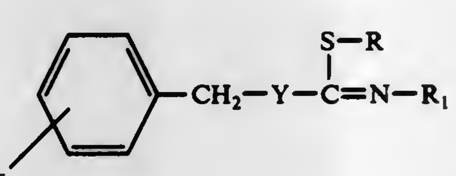

in which X is hydrogen, mono- or dihalo or 2-methyl; Y is oxygen or sulfur; R is alkyl, lower alkenyl, chloro-lower alkyl, chloro-lower alkenyl, carbomethoxymethyl or methyl-thiomethyl and R_1 is lower alkyl, lower alkenyl or p-chlorobenzyl; provided that if X is 4-chloro, R is other than methyl-thiomethyl.

4,062,972

POLYCHLORINATED NAPHTHALENIC PESTICIDES

Grover L. Farrar, Greenville, S.C., and Phillip W. Storms, Littleton, Colo., assignors to Marathon Oil Company, Findlay, Ohio

Division of Ser. No. 608,315, Aug. 27, 1975, Pat. No. 4,022,827, which is a division of Ser. No. 35,244, May 6, 1970, Pat. No. 3,939,198, which is a continuation-in-part of Ser. No. 529,221, Feb. 23, 1966, abandoned. This application May 17, 1976, Ser. No. 687,417

Int. Cl.^{2} A01N *9/24*

U.S. Cl. 424—308 **1 Claim**

1. A pesticidal composition comprising an inert carrier and a pesticidally effective amount of a compound selected from the group consisting of 1,4-dichloro-2,6-dicarbomethoxynaphthalene, 1,4,7,8-tetrachloro-2,6-dicarbomethoxynaphthalene, 1,3,4,7,8-pentachloro-2,6-dicarbomethoxynaphthalene, hexachloro-2,6-dicarbomethoxynaphthalene, 3,4,5,7-tetrachloro-alpha-methyl naphthoate, 2,4,5,6,8-pentachloro-alpha-methyl naphthoate, 2,3,4,6,7,8-hexachloro-alpha-methyl naphthoate, 1,3,4,7,8-pentachloro-beta-methyl naphthoate, and heptachloro-alpha-naphthalene carbonyl chloride.

4,062,973

SULFUR-CONTAINING DERIVATIVES OF CYCLOHEXYLPHENYL-ETHANE

Josef Nickl; Berthold Narr; Erich Müller; Josef Roch, and Walter Haarmann, all of Biberach, Germany, assignors to Boehringer Ingelheim GmbH, Ingelheim am Rhein, Germany

Filed Oct. 6, 1976, Ser. No. 730,122

Claims priority, application Germany, Oct. 16, 1975, 2546319

Int. Cl.^{2} C07C *149/40, 147/107;* **A61K** *31/215, 31/19*

U.S. Cl. 424—308 **8 Claims**

1. A compound of the formula

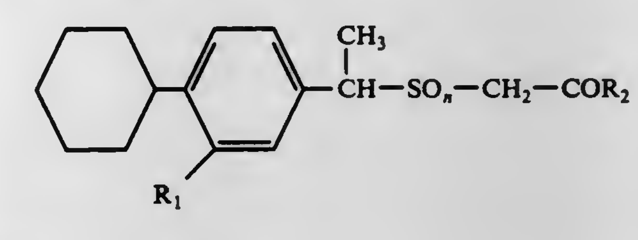

wherein

R_1 is hydrogen or halogen,

R_2 is hydroxyl, alkoxy of 1 to 6 carbon atoms or aralkoxy of 7 to 10 carbon atoms, and

n is 0, 1 or 2,

a diastereoisomer thereof or, when R_2 is hydroxyl, a non-toxic, pharmacologically acceptable salt thereof formed with an inorganic or organic base.

7. An antithrombotic pharmaceutical dosage unit composition consisting essentially of an inert pharmaceutical carrier and an effective antithrombotic amount of a compound of claim 1.

4,062,974

METHOD FOR TREATING DREPANOCYTOSIS

Raymond Coirault, Paris, France, assignor to Albert Rolland S.A., Chilly Mazarin, France

Filed Nov. 29, 1976, Ser. No. 745,546

Int. Cl.^{2} A61K *31/235*

U.S. Cl. 424—308 **3 Claims**

1. A method for the remedial or prophylactic treatment of attacks suffered by patients having drepanocytosis, comprising administering by the IM or oral route an effective amount of the betadimethylaminoethyl ester of para-chlorophenoxyacetic acid or one of its physiologically acceptable acid addition salts.

4,062,975
AMINO SUBSTITUTED ARYLTHIO-ALKANOIC ACIDS HAVING HYPOLIPIDEMIC ACTIVITY

Eugene R. Wagner, Midland, and Bobbie J. Allen, Detroit, both of Mich., assignors to The Dow Chemical Company, Midland, Mich.

Filed Mar. 29, 1976, Ser. No. 671,909
Int. Cl.^{2} A61K *31/20, 31/24, 31/195;* **C07C** *149/40*
U.S. Cl. 424—319 **10 Claims**

1. A compound of the formula ,02/0120

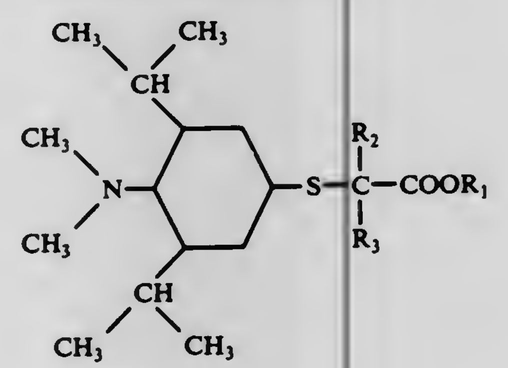

wherein
- R_1 represents hydrogen
- and R_2 and R_3 independently represent hydrogen or an alkyl having from 1 to about 5 carbon atoms
- and the pharmaceutically acceptable salts thereof.

7. A method for lowering elevated serum lipids in a mammal which comprises administering internally to the mammal a hypolipidemically effective amount of a compound having the formula ,04/0120

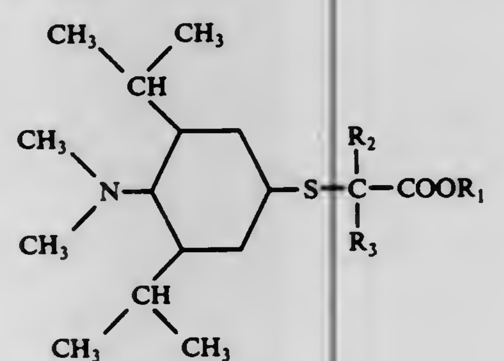

wherein
- R_1 represents hydrogen
- and R_2 and R_3 independently represent hydrogen or an alkyl having from 1 to about 5 carbon atoms
- and the pharmaceutically acceptable salts thereof.

4,062,976
ANTIMICROBIAL COMPOSITIONS EMPLOYING CERTAIN SUBSTITUTED ALANINES AND CERTAIN T-AMINE OXIDES

Edwin B. Michaels, Gregory Court, East Norwalk, Conn. 08655

Filed Dec. 18, 1975, Ser. No. 641,730
Int. Cl.^{2} A61K *31/195*
U.S. Cl. 424—319 **8 Claims**

1. A broad spectrum, antimicrobial composition having low toxicity which consists essentially of:
  a. 0.1 to 40 parts, by weight, of a higher alkylsubstituted alanine having the structure:
     1 $RNHCH_2CH_2COOH$, or
     2 $RN(CH_2CH_2COOH)_2$
  where R is a higher alkyl of from 10 to 18 carbon atoms,
  b. 0.1 to 40 parts, by weight, of (1) a higher alkyl-N,N-dimethylamine oxide, (2) a higher alkyl-N,N-dihydroxyethylamine oxide, or (3) an acylamido t-amine oxide having the respective structure:

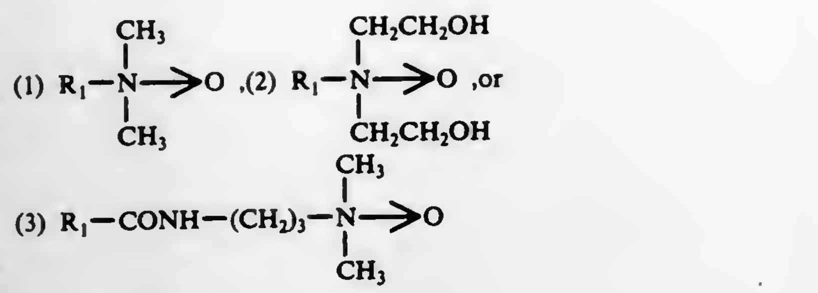

where R_1 is a higher alkyl of from 10 to 18 carbon atoms, or mixtures of the same, and
  c. a protonating agent, sufficient to adjust the pH of said composition from 4 to 6.0.

4,062,977
SUBSTITUTED-N-(1,1-DISUBSTITUTED ETHYL)-α-(SUBSTITUTED PHENOXY)-α-ALKOXYACETAMIDES AND THEIR USE AS MITICIDES

Don R. Baker, Orinda, and Francis H. Walker, Mill Valley, both of Calif., assignors to Stauffer Chemical Company, Westport, Conn.

Continuation of Ser. No. 591,729, June 30, 1975, abandoned. This application July 15, 1976, Ser. No. 705,504
Int. Cl.^{2} A01N *9/20, 9/24;* **C07C** *103/22*
U.S. Cl. 424—324 **11 Claims**

1. A method of controlling mites comprising applying to said mites a miticidally effective amount of a compound having the formula

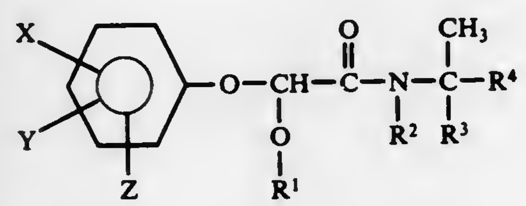

wherein X is selected from the group consisting of chlorine, flourine, and trifluoromethyl; Y and Z are independently selected from the group consisting of hydrogen, chloride, and methyl; R^1 is either methyl or ethyl; R^2 and R^3 are independently selected from the group consisting of hydrogen and methyl; and R^4 is either methyl or —C≡CH.

9. A compound having the formula

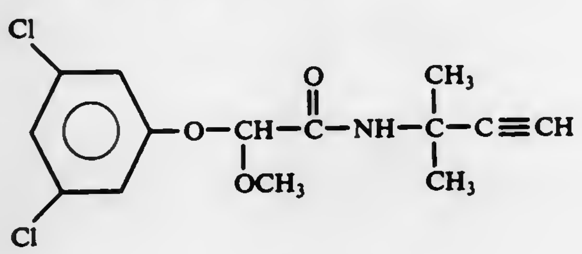

4,062,978
PHENYL BUTANONES

William Gwyn Cole, Twickenham; Alexander Crossan Goudie, Harlow, and Carl John Rose, London, all of England, assignors to Beecham Group Limited, Great Britain

Filed June 20, 1975, Ser. No. 588,638
Claims priority, application United Kingdom, July 4, 1974, 29651/74
Int. Cl.^{2} C07C *49/76, 49/84;* **A01N** *9/24*
U.S. Cl. 424—331 **23 Claims**

1. A pharmaceutical composition useful for the treatment of inflammation in humans and animals which comprises an anti-inflammatory amount of a compound of the formula

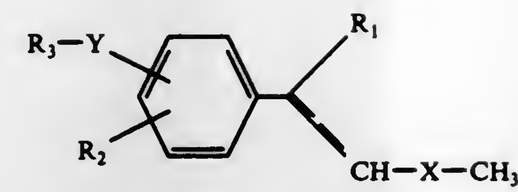

wherein X is CO; Y is an oxygen atom; the dotted line represents a double bond which may be present or absent; R_1 is hydrogen or methyl; R_2 is hydrogen; and R_3 is alkenyl of 3 to 8 carbon atoms or cycloalkenyl of 5 to 8 carbon atoms, in combination with a pharmaceutically acceptable carrier.

4,062,979
SPRAY DRIED MUSTARD FLOUR

Mark P. Haak, Shrewsbury, Pa., assignor to McCormick & Company, Incorporated, Hunt Valley, Md.

Filed Aug. 1, 1975, Ser. No. 601,439
Int. Cl.^{2} A23L *1/225*
U.S. Cl. 426—44 **37 Claims**

1. A process for manufacturing mustard flour having a selected degree of pungency versus blandness upon hydration from mustard seed which is known to naturally contain a glucoside and an enzyme which catalyzes a reaction of the glucoside, in the presence of water, to produce a volatile pungent oil, said process comprising:
  a. grinding a first quanta of mustard seed, hydrating this first quanta and heating it sufficiently to disable substantially all of said enzyme contained therein;
  b. drying the hydrated first quanta in a heated gas stream to produce a first mustard flour product, which, if rehydrated alone, is relatively bland due to the disabling of said enzyme;
  c. grinding a second quanta of mustard seed;
  d. hydrating the ground second quanta sufficiently to produce said reaction therein to produce at least some of the volatile pungent oil potentially producible therein;
  e. drying the hydrated second quanta in contact with a heated gas stream, to produce a second mustard flour product, which, if hydrated alone is relatively bland due to the evaporation therefrom during drying of at least a substantial proportion of said volatile oil therefrom;
  f. step (d) being carried out at such a cool temperature and step (e) being carried out for such a short time, that a substantial proportion of said enzyme originally present in the second quanta of mustard seed survives in the second mustard flour product; and
  g. blending the first mustard flour product with the second mustard flour product to produce a resulting mustard flour product whose characteristic degree of pungency upon hydration is substantially affected by how much of said glucoside of the first mustard flour product is available for producing said reaction, catalyzed by said enzyme of the second mustard flour product.

4,062,980
HUMIDIFYING AND SHIRRING EDIBLE COLLAGEN SAUSAGE CASING

John R. Wilson, and Noel I. Burke, both of Danville, Ill., assignors to Teepak, Inc., Chicago, Ill.

Filed Mar. 22, 1976, Ser. No. 669,074
Int. Cl.^{2} A23L *11/13*
U.S. Cl. 426—278 **6 Claims**

1. In a process for humidifying an artificial collagen sausage casing during shirring wherein an aqueous humidification fluid is applied to the inside wall of the unshirred casing and the casing subsequently shirred, the improvement which comprises dispersing in the aqueous fluid about 0.8–3% by weight of a mixture of the partial fatty acid esters of glycerine and sorbitol, the glycerine ester being present in the aqueous fluid at a concentration of more than 0.1% by weight and the mixture is applied to the casing in a proportion to provide from about 0.01 to about 0.10 mg./in^2 of the glycerine ester on the internal wall of the casing and about 0.04 to 0.10 mg./in^2 of the sorbitol ester on the internal wall of the casing.

4,062,981
HUMIDIFYING AND SHIRRING ARTIFICIAL SAUSAGE CASING

Douglas J. Bridgeford, Champaign, Ill., assignor to Teepak, Inc., Chicago, Ill.

Continuation-in-part of Ser. No. 488,646, July 15, 1974, abandoned. This application Mar. 1, 1976, Ser. No. 662,669
Int. Cl.^{2} A23L *11/31*
U.S. Cl. 426—278 **5 Claims**

1. In a process for humidifying an artificial sausage casing on a shirring machine wherein a moisture-providing fluid is contacted with the inside wall of unshirred casing and the casing subsequently shirred, the improvement which comprises employing as said moisture-providing fluid a mixture comprising water and from about 0.5–5% of a surfactant having lubricating properties which is applied to said casing in a proportion to provide from about 0.015 to 0.15 mg. surfactant per square inch of casing.

4,062,982
METHOD FOR STERILIZATION OF FOOD PRODUCTS

Kenneth R. McMillan, and Gary A. Henderson, both of Cobourg, Canada, assignors to General Foods, Limited, Toronto, Canada

Filed May 28, 1976, Ser. No. 691,126
Claims priority, application Canada, May 28, 1975, 227913
Int. Cl.^{2} A23L *3/34;* **A21D** *2/14*
U.S. Cl. 426—320 **7 Claims**

1. A method for sterilization of food products which comprises
  subjecting a food product to a free flowing system in a closed chamber containing a sterilant gas selected from the group consisting of ethylene oxide and propylene oxide and mixtures thereof at a concentration and at a temperature and for a period of time not greater than about 15 minutes effective to obtain a desired level of microbial kill while minimizing formation of chlorohydrins.

4,062,983
METHOD FOR MAINTAINING HEAT AND MOISTURE IN FOOD

Ronald R. Roderick, Evergreen, Colo., assignor to National Equipment Corporation, Denver, Colo.

Division of Ser. No. 536,456, Dec. 26, 1974, Pat. No. 3,999,475. This application Aug. 11, 1976, Ser. No. 713,416
Int. Cl.^{2} A23L *1/00*
U.S. Cl. 426—418 **7 Claims**

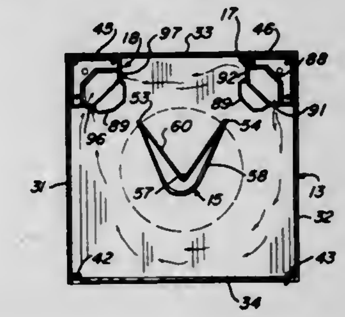

1. In a method of holding heat and moisture in a food comprising the steps of:
  confining a food in a volume of substantially still air; and
  directing a stream of heated, humidified air in a vortex pattern around the food substantially out of direct contact with the food so that there is no significant amount of airflow impinging on the food and so that there remains a

core of said substantially still air about the food which is heated and moisturized by said stream to hold the food at a selected temperature and at a selected moisture content level.

4,062,984
REMOVAL OF AFLATOXIN FROM PEANUTS
Robert H. Lindquist, Berkeley, Calif., assignor to Chevron Research Company, San Francisco, Calif.
Continuation-in-part of Ser. No. 506,374, Sept. 16, 1974, abandoned. This application Aug. 29, 1975, Ser. No. 608,591
Int. Cl.² A23L *1/36*
U.S. Cl. 426—430 **4 Claims**

1. A method for removal of aflatoxin from cleaned and hulled seeds or nuts which comprises introducing said seeds or nuts into an extraction zone, contacting the said seeds or nuts with a liquid solvent consisting essentially of methoxymethane in said extraction zone for a time and a number of treatments sufficient to extract aflatoxin from said seeds or nuts and separating methoxymethane extract in liquid form containing substantially all of said aflatoxin.

4,062,985
CONTINUOUS PEELING METHOD
John H. Amstad, Alameda, Calif., assignor to Atlas Pacific Engineering Company, Emeryville, Calif.
Division of Ser. No. 635,606, Nov. 26, 1975, which is a continuation-in-part of Ser. No. 452,420, March 18, 1974, abandoned. This application Aug. 19, 1976, Ser. No. 716,067
Int. Cl.² A23N *7/00*
U.S. Cl. 426—483 **3 Claims**

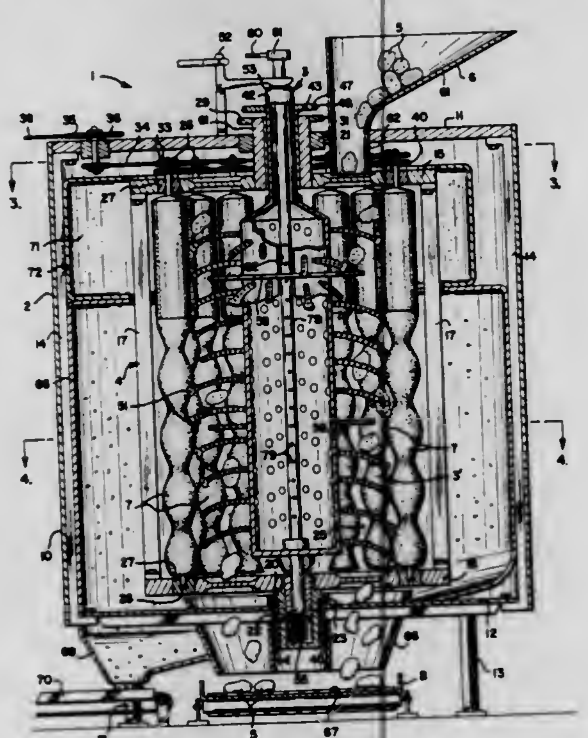

1. A method of peeling vegetables and separating the peelings from the resultant mixture of vegetables and peelings comprising the steps of:
a. rotating a peeling cage formed of rotating spindles with an abrading surface having sufficient abrading properties to peel vegetables, said rotation being at a rotary speed sufficient to maintain vegetables in continuous centrifugal force contact against said spindle abrading surface wherein said vegetables travel substantially at said speed in contact with said spindle abrading surface,
b. urging vegetables to be peeled into engagement with said spindle abrading surface,
c. permitting said cage to accelerate said vegetables to be peeled to said speed, and
d. separating peelings generated in said peeling cage from the vegetables by centrifugal force.

4,062,986
METHOD FOR PREPARING SWEETENED, STORAGE STABLE, CHUNKY PEANUT SPREAD AND PRODUCT THEREOF
Fred W. Billerbeck; Lawrence H. Everett; Patrick G. McGowan, and Paul V. Pettinga, all of Fremont, Mich., assignors to Gerber Products Company, Fremont, Mich.
Continuation-in-part of Ser. No. 422,496, Dec. 6, 1973, Pat. No. 4,000,322, which is a continuation-in-part of Ser. No. 308,369, Nov. 21, 1972, Pat. No. 3,903,311. This application June 2, 1975, Ser. No. 583,062
The portion of the term of this patent subsequent to Sept. 2, 1992, has been disclaimed.
Int. Cl.² A23L *1/38*
U.S. Cl. 426—633 **3 Claims**

1. In a method for preparing a desirably appearing, storage stable sweetened peanut spread composition having at least about 5 weight percent based on the total sweetened peanut spread composition of honey, by combining roasted peanuts with a glyceride stabilizer, a small amount of fortifying materials and a small amount of one or more substantially anhydrous hydrophilic edible additives of the group consisting of mono- and disaccharides and salt, to form a peanut composition; milling the peanut composition with vegetable oil and from about 0.15 to 0.85 weight percent based on the weight of honey of an emulsifier; subjecting said milled mixture to deaeration; adjusting the temperature of the milled mixture to about 140°-150° F; heating the honey to about 120°-140° F; blending said heat adjusted mixture with said heated honey to form a homogeneous sweetened peanut spread composition; and cooling said homogeneous composition to less than 120° F, wherein said roasted peanuts and vegetable oil are in an amount of from about 60 to 92 weight percent, said stabilizer is in an amount of from 1 to 3 weight percent, and said vegetable oil is in an amount of from 6 to 24 weight percent based on the final composition, the improvement comprising blending with said cooled composition granulated, roasted peanuts and subjecting said granulated peanut-containing cooled composition to further deaeration, prior to packing in containers for storage.

4,062,987
PROTEIN TEXTURIZATION BY CENTRIFUGAL SPINNING
William M. Hildebolt, Mickleton, N.J., assignor to Campbell Soup Company, Camden, N.J.
Filed Dec. 31, 1975, Ser. No. 645,615
Int. Cl.² A23J *3/00*
U.S. Cl. 426—641 **25 Claims**

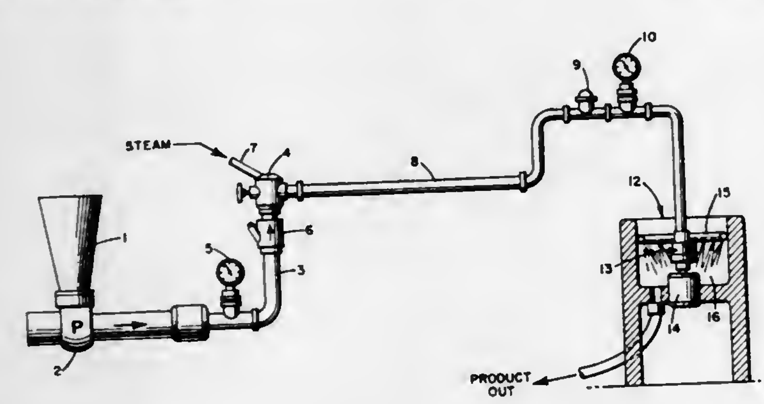

1. A process for producing texturized monofilaments of protein material comprising:
a. contacting a slurry of protein material with an injected heated gaseous stream in a confined zone for a time, and at a temperature and pressure sufficient to texturize the protein material in said slurry;
b. centrifugally spinning said texturized protein material to form texturized protein monofilaments; and
c. recovering said texturized protein monofilaments in a collection zone.

4,062,988
ANIMAL FEED BLOCK
Stanislao A. De Santis, Rolling Hills, Calif., assignor to Milo Don Appleman, Los Angeles, Calif., a part interest
Continuation-in-part of Ser. No. 668,225, March 18, 1976, Pat. No. 4,016,296. This application July 22, 1976, Ser. No. 707,510
The portion of the term of this patent subsequent to Apr. 5, 1994, has been disclaimed.
Int. Cl.² A23K *1/02*
U.S. Cl. 426—656 **16 Claims**

1. An animal feed block comprising:
about 25 to about 75% by weight of molasses;
about 0.5 to about 10% by weight of hard soap; and
natural protein source to make up 100% by weight of said feed block with the minimum concentration of said natural protein source in said feed block being at least about 20% by weight.

4,062,989
METHOD AND APPARATUS FOR COATING MOVING WEBS AND PRODUCTS PRODUCED THEREBY
Delmar D. Long, Rock Hill, S.C., assignor to M. Lowenstein & Sons, Inc., New York, N.Y.
Filed June 14, 1976, Ser. No. 695,723
Int. Cl.² B05D *3/12, 1/00, 5/00*
U.S. Cl. 427—176 **17 Claims**

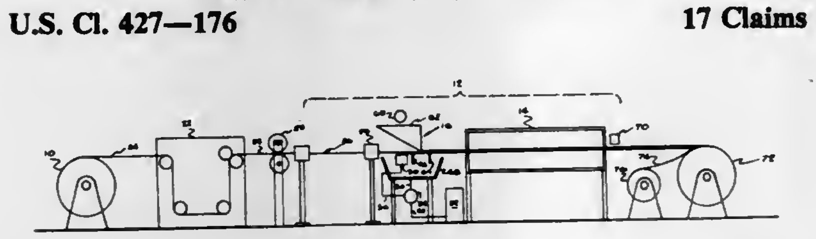

1. Apparatus for coating the surfaces of a moving web of porous material to substantially penetrate the interstices of the web with the coating material comprising:
a. means for moving the web in a generally horizontal path of travel;
b. first applicator means positioned beneath and extending across the path for continuously extruding a layer of viscous coating material onto the bottom surface of the moving web and substantially upwardly into the interstices thereof;
c. first scraper means positioned beneath and extending across the path closely adjacent the downpath side of said first applicator means for contacting the layer of coating material on the bottom surface to smooth the layer to a desired thickness and remove any excess coating material therefrom; and
d. second applicator means positioned above and extending across the path closely adjacent the downpath side of said first scraper means for continuously discharging a layer of viscous coating material onto the top surface of the moving web and substantially downwardly into the interstices of the web to contact the bottom layer of coating material thereon, said second applicator means including edge means extending across the path for contacting the top surface layer of coating material to smooth and control the thickness of surface layer applied to the web.

4,062,990
NON-POLLUTING SYSTEM FOR METAL SURFACE TREATMENTS
Lester Coch, Northport, N.Y., assignor to Walders Kohinoor, Inc., Long Island, N.Y.
Filed June 10, 1976, Ser. No. 694,830
Int. Cl.² B05D *3/12*
U.S. Cl. 427—242 **14 Claims**

1. A cyclic process for the mechanical impact plating of consecutive batches of base metal articles without discharge of ecologically objectionable liquid effluent from the process, which process comprises a multiplicity of sequences of several cycles each, with withdrawal of different used treating liquids and suspended excess metal powder from each cycle and re-use thereof in a later cycle and with rectification of treating liquid between sequences, and
A. wherein each cycle comprises the steps of
a. loading a batch of base metal articles having a known total surface area into a tumbling zone;
b. loading a mass of impacting media and an aqueous inorganic cleaning acid solution into said tumbling zone and agitating the resulting mixture in said tumbling zone until the articles are cleaned;
c. adding a water-soluble copper salt to the mixture of cleaned articles, impacting media and acid solution and agitating the resulting mixture of the tumbling zone until copper metal plates out onto the metal articles;
d. next adding to the mixture in the tumbling zone a water-soluble salt of tin and agitating the resulting mixture of solids and liquid in the tumbling zone;
e. adding a malleable metal powder selected from the group consisting of zinc, cadmium, brass, copper, aluminum, tin, lead, gold and silver to the mixture in the tumbling zone in an amount which is at least 1 to 75% in excess over the amount of metal required to deposit a predetermined thickness of said malleable metal uniformly over said metal articles and agitating the resulting mixture of solids and plating liquid in the tumbling zone at a pH between about 1.5 and about 4 for a time empirically predetermined to provide a malleable metal plating of predetermined thickness on said metal articles while the plating liquid becomes depleted;

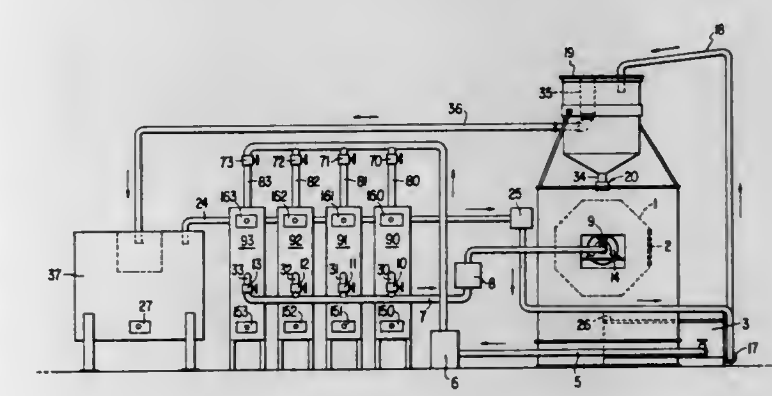

f. removing the depleted plating liquid including metal powder suspended therein from the tumbling zone and passing it to a plating liquid storage zone;
g. adding rinse water to the plated metal articles and impacting media in the tumbling zone and agitating the mixture to effect rinsing of the plated metal articles;
h. removing the used rinse water from the tumbling zone and passing it to a rinse water storage zone;
i. removing the plated metal articles and the impacting media from the tumbling zone and separating the articles from the media;
j. storing the separated media in a media storage zone; and
k. recovering the plated metal articles; and
B. wherein the next cycle comprising steps (a) through (k) is begun with a new batch of base metal articles while returning to the tumbling zone in step (a) the depleted plating liquid including suspended metal powder from the plating liquid storage zone and the separated impacting media from the media storage zone, adding a make-up amount of cleaning acid thereto insure proper acidity for cleaning the metal articles; and while returning to the tumbling zone in step (g) previously used rinse water from the rinse water storage zone; and
C. wherein additional cycles comprising steps (a) through (k) are carried out as in (B) until process performance in step (e) reaches a predetermined level, at which stage the plating liquid is rectified by adding alkali thereto to precipitate metal compounds from the liquid, mechanically separating the precipitated compounds from the liquid,

and further using the liquid in the process after acidifying it.

4,062,991
TREATMENT OF WOOD

Colin Trevor Kyte, Marlow; Geoffrey John Lewis, Hazelmere; Edgar Pearce, High Wycombe, and Keith Hume, Camberley, all of England, assignors to Fosroc A.G., Zug, Switzerland

Filed Aug. 13, 1974, Ser. No. 497,161
Claims priority, application United Kingdom, Aug. 15, 1973, 38648/73; Mar. 1, 1974, 9474/74; June 11, 1974, 25911/74
Int. Cl.[2] B27K *3/10*
U.S. Cl. 427—297 8 Claims

1. A method of treating timber comprising subjecting the timber to a first vacuum step, applying an organic preservative composition to the timber while under vacuum, said composition comprising a preservative in an organic solvent, said first vacuum being applied in a sufficient amount and for a sufficient time to permit the organic preservative composition to penetrate the timber, removing the preservative composition from the timber, subjecting the timber to a second vacuum step to remove excess preservative composition, drying said timber and applying stain thereto, said organic preservative composition including an air oxidizing agent selected from the group consisting of air oxidizing resin and oil, said agent serving to reduce drying time substantially.

4,062,992
FLOCKED HIGH OR LOW PRESSURE DECORATIVE LAMINATE COMPONENT

George Edward Power, and Dedley Wulfekotter, both of Cincinnati, Ohio, assignors to Formica Corporation, Cincinnati, Ohio

Filed Sept. 29, 1975, Ser. No. 617,927
Int. Cl.[2] B32B *33/00*
U.S. Cl. 428—90 17 Claims

1. An article of manufacture adapted to become a component of a high or low pressure decorative laminate comprising
1. a dry thermosetting resin impregnated paper sheet,
2. a dry adhesive coating positioned on one side of said sheet, said adhesive being substantially non-flowable in said dry state when subjected to the heat and pressure of high or low pressure decorative laminating and
3. flocked fibers implanted in said adhesive in generally a perpendicular orientation to said sheet.

4,062,993
TEXTILE AND METHOD OF MAKING SAME

William W. Seward, Dug Gap Road - P.O. Box 1068, Dalton, Ga. 30720

Continuation of Ser. No. 365,487, May 31, 1973, abandoned. This application Apr. 29, 1975, Ser. No. 572,840
Int. Cl.[2] D03D *27/00*
U.S. Cl. 428—93 14 Claims

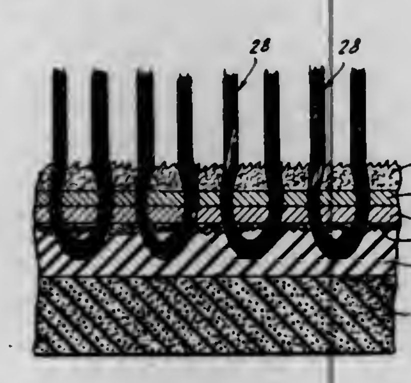

1. A fabric composition comprising
a fabric base,
a heat conductive initially continuous sheet-form metal foil overlying said base,
a non-woven batt of fibers overlying said metallic foil,
and a plurality of mechanical interlocks joining the base, the foil and the batt and more specifically comprising
a plurality of tufts of fibers from said batt extending in one direction through said foil through spaced apart needle punched apertures in the foil without impairing the unbroken thermal conductivity continuity of the foil between the apertures,
some of said fibers extending back in an opposite direction through the same apertures in the foil,
said batt and said foil being mechanically locked to said base solely by said fibers of said batt which have been pushed through said foil and said base to form fiber masses which are locked against the bottom of said base,
said foil forming unbroken continuous conductive paths to conduct heat away from a point of application to said composition for dissipation throughout the fabric composition.

4,062,994
ENERGY ABSORBING COMPOSITE STRUCTURES

Robert Savile Millman, Nottingham, and John Godfrey Morley, Little Eaton, both of England, assignors to National Research Development Corporation, London, England

Continuation-in-part of Ser. No. 274,014, July 21, 1972, abandoned. This application Feb. 19, 1975, Ser. No. 551,299
Claims priority, application United Kingdom, July 27, 1971, 35107/71; Dec. 23, 1971, 60110/71; Mar. 16, 1972, 12199/72; Apr. 15, 1972, 17505/72
Int. Cl.[2] B32B *7/06;* B60R *19/02;* F16D *63/00;* G01N *3/08*
U.S. Cl. 428—101 15 Claims

1. A composite article resistive to tensile stress, said article comprising at least two components and incorporating, as one component, a load-bearing tubular element of ductile material bonded to a second component having its longitudinal axis substantially parallel to the expected direction of tensile stress in the article, the ductility of the tubular element being such that the element deforms plastically at a part intermediate its ends when subjected to axial tensile stress less that the ultimate tensile strength of the element, said ductile material of the tubular element having deformation characteristics such that the wall of that portion of the tubular element contracts towards its longitudinal axis thereby absorbing energy.

4,062,995
RETICULAR WEB

Ralf Korpman, Bridgewater, N.J., assignor to Johnson & Johnson, New Brunswick, N.J.

Filed June 23, 1976, Ser. No. 699,102
Int. Cl.[2] B32B *3/10*
U.S. Cl. 428—134 8 Claims

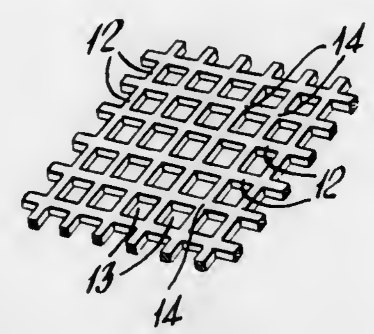

1. A permanently heat shaped elastic and thermoplastic reticular web which comprises strands intersecting in a pattern and defining a corresponding pattern of holes, said web being formed from an elastomeric and thermoplastic composition which comprises an elastomeric component and about 0–200 parts of a resin component per one hundred parts by weight of the elastomeric component, said elastomeric component consisting essentially of linear or radial A-B-A block copolymers or mixtures of these linear or radial A-B-A copolymers with simple A-B block copolymers, said A-blocks being derived from vinyl arenes and said B-blocks being derived from conjugated dienes or lower alkenes, and said web being easily stretchable and elastic and adapted to recover from deformation without substantial loss of its permanent shape.

4,062,996
TRANSMITTING AND REFLECTING DIFFUSER

Lloyd S. Keafer, Jr., Yorktown; Ernest E. Burcher, and Leonard P. Kopia, both of Newport News, all of Va., assignors to The United States of America as represented by the Administrator of the National Aeronautics and Space Administration, Washington, D.C.

Division of Ser. No. 239,803, March 30, 1970, Pat. No. 3,779,788, and a continuation-in-part of Ser. No. 38,816, May 19, 1970, abandoned. This application June 18, 1973, Ser. No. 370,999
Int. Cl.[2] G02B *13/14;* B32B *19/00*
U.S. Cl. 428—334 3 Claims

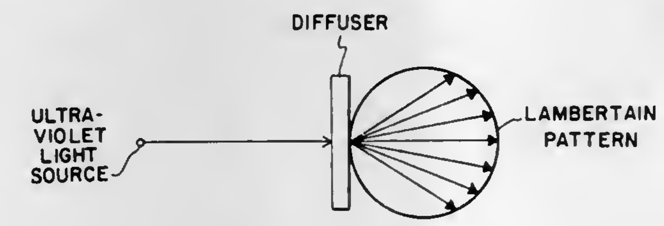

1. A diffuser for producing an ultraviolet near Lambertian pattern comprising:
a substrate; and
a diffusive coating condensed from a separate piece of fused silica evenly covering said substrate and having a sufficient thickness for producing an ultraviolet near Lambertian pattern.

4,062,997
OLEFIN RESIN-METAL BONDED STRUCTURE

Hisashi Hotta, and Fumio Mori, both of Yokohama, Japan, assignors to Toyo Seikan Kaisha Limited, Tokyo, Japan

Filed Apr. 19, 1976, Ser. No. 678,053
Claims priority, application Japan, Apr. 22, 1975, 50-48227
Int. Cl.[2] D02G *3/00*
U.S. Cl. 428—378 8 Claims

1. An olefin resin-metal bonded structure having high corrosion resistance and peel strength, which comprises a metal substrate and an olefin resin layer bonded together through a primer layer, said primer layer being formed by applying a coating solution containing (a) an oxidized polyethylene having an oxygen content of 0.1 to 10% by weight, a saponification value of 2 to 200, a density of 0.90 to 1.2 and an average molecular weight of 1000 to 50000 and (B) a coating-forming base resin having a density higher by at least 0.1 than the oxidized polyethylene and containing a functional group selected from hydroxyl and carbonyl groups at a concentration of at least 1 meq/g, the mixing weight ratio of the oxidized polyethylene (A) and the base resin (B) being within the following range:

$$(A):(B) = \text{from } 0.2{:}99.8 \text{ to } 45{:}55,$$

said primer layer having a distribution structure in which each of the concentrations of the oxidized polyethylene (A) and the base resin (B) varies with respect to the thickness direction of said primer layer with such a gradient that the base resin (B) is concentrated predominantly on that side of the primer layer toward the metal substrate and the oxidized polyethylene (A) is concentrated predominantly on that side of the primer layer toward the olefin resin.

4,062,998
HEAT-RESISTANT, RESIN COATED ELECTRIC WIRE CHARACTERIZED BY THREE RESIN COATINGS, THE OUTER OF WHICH IS LESS HIGHLY CROSS-LINKED THAN THE COATING NEXT ADJACENT THERETO

Miyuki Hagiwara, Maebashi; Masayoshi Sohara; Kunio Araki, both of Takasaki, and Tsutomu Kagiya, Kyoto, all of Japan, assignors to Japan Atomic Energy Research Institute, Tokyo and Kishimoto Sangyo Co., Ltd., Osaka, both of, Japan

Filed Apr. 9, 1976, Ser. No. 675,252
Claims priority, application Japan, Apr. 12, 1975, 50-44445; Oct. 13, 1975, 50-123087
Int. Cl.[2] B32B *15/02, 15/08;* H01B *3/44*
U.S. Cl. 428—380 10 Claims

1. Electric wire coated by a combustible, insulating resin and a self-extinguishing resin, the outer layer being the self-extinguishing resin, characterized in that the self-extinguishing resin is composed of two layers, the degree of crosslinking of which are different from each other, and gel percent of outer portion of the self-extinguishing resin is lower than that of inner portion of the self-extinguishing resin.

4,062,999
SYNTHETIC ORGANIC FIBERS COATED WITH AN AMINO SILANE AND AN EPOXY SILOXANE CONTAINING TREATING AGENT

Takamitsu Kondo, and Mikio Tashiro, both of Matsuyama, Japan, assignors to Teijin Limited, Osaka, Japan

Division of Ser. No. 604,047, Aug. 12, 1975, Pat. No. 3,980,599, which is a continuation-in-part of Ser. No. 546,906, Feb. 4, 1975, abandoned. This application Dec. 16, 1975, Ser. No. 641,286
Claims priority, application Japan, Feb. 12, 1974, 49-16312
Int. Cl.[2] B32B *9/00;* D02G *3/00*
U.S. Cl. 428—391 9 Claims

1. Filling organic synthetic fibers coated with a heat-treated product of a treating agent comprising (a) 1 part by weight of an aminosilane of the formula (I)

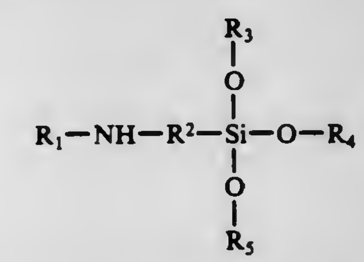

(I)

wherein R_1 is a hydrogen atom, an alkyl group containing 1 to 4 carbon atoms, or a phenyl group, R_2 is an alkylene group containing 1 to 4 carbon atoms, and R_3, R_4 and R_5, independently from each other, represent an alkyl group containing 1 to 4 carbon atoms,
and (b) 1 to 20 parts by weight of an epoxysiloxane containing at least one structural unit of the formula (II)

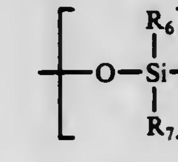

(II)

wherein R_6 and R_7, independently from each other, represent an alkyl group containing 1 to 3 carbon atoms, and at least two structural units of the formula (III)

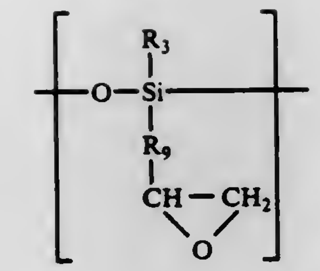

(III)

wherein R_8 is an alkyl group containing 1 to 3 carbon atoms or the group

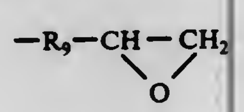

R_9 being an alkylene group containing 2 to 5 carbon atoms or a substituted or unsubstitued arylene group containing 6 to 10 carbon atoms.

4,063,000
PROCESS FOR PRODUCTION OF FERROMAGNETIC POWDER
Masashi Aonuma; Hiroshi Ogawa, and Yasuo Tamai, all of Odawara, Japan, assignors to Fuji Photo Film Co., Ltd., Minami-ashigara, Japan
Filed Sept. 17, 1975, Ser. No. 614,274
Claims priority, application Japan, Sept. 17, 1974, 49-106901
Int. Cl.² H01F *1/02*
U.S. Cl. 428—403 **14 Claims**

11. A ferromagnetic metal powder comprising at least about 75% by weight of a ferromagnetic metal selected from the group consisting of Fe, Co, Ni and combinations thereof; about 20% by weight of a non-magnetic metal selected from the group consisting of Al, Si, S, Sc, Ti, Vi, Cr, Mn, Zn, Y, Mo, Rh, Pd, Ag, Sn, Sb, Te, Ba, Ta, W, Re, Au, Hg, Pb, Bi, La, Ce, Pr, Nd, B, P and combinations thereof; and 15% by weight or less of a member selected from the group consisting of water, oxygen, hydroxyl groups, and combinations thereof; said ferromagnetic metal powder being produced by reducing, in a solution, a salt of said metal capable of forming a ferromagnetic metal powder and a salt of said non-magnetic metal with a reducing agent, and separating the ferromagnetic powder from the reaction bath, washing the ferromagnetic powder with water until the conductivity of the water after the washing is 50 m μ/cm or less, and then treating said ferromagnetic metal powder with an aqueous solution containing at least one anionic surface active agent.

4,063,001
METHOD OF PREPARING ACID RESISTANT GLASS FIBERS
Isaac A. Zlochower, Pittsburgh, Pa., assignor to PPG Industries, Inc., Pittsburgh, Pa.
Division of Ser. No. 566,471, April 9, 1975, abandoned, which is a continuation-in-part of Ser. No. 455,471, March 27, 1974, abandoned. This application May 13, 1976, Ser. No. 685,854
Int. Cl.² C03C *25/06, 13/00*
U.S. Cl. 428—410 **12 Claims**

1. A method of preparing a dual composition, acid resistant glass fiber comprising contacting the surface of the siliceous glass fiber with an aqueous acidic solution at a pH and temperature and for a period of time sufficient to increase the silica content of said surface without substantially reducing the tensile strength of said fiber and producing a glass fiber having an overall SiO_2 content of 52 to 64 percent by weight, removing said aqueous acid solution from the surface of said fiber and heating the fiber after removing said acid solution for a time and at a temperature sufficient to render the surface of said fiber acid resistant.

4,063,002
INSULATED GLASS AND SEALANT THEREFOR
Floyd Wilson, Jr., R.D. 1 Box 434A Pleasant Valley Road, Titusville, Mercer County, N.J. 05860
Continuation-in-part of Ser. No. 567,486, April 14, 1975, abandoned. This application Apr. 8, 1976, Ser. No. 675,084
Int. Cl.² B32B *9/04*
U.S. Cl. 428—411 **23 Claims**

1. Insulated glass, including as a sealant therefor, a composition comprising a plasticized cured polyurethane or a plasticized cured polyether, said composition having a moisture vapor transmission rating of no greater than about 1 g/day, an elongation of at least about 100% and low volatility.

3. A plasticized cured composition having a moisture vapor transmission rating of no greater than about 1 g/day, an elongation of at least about 100% and low volatility and comprising:

A. about 30 to about 40 wt. % of a polyurethane which is the reaction product of a hydroxyterminated polybutadiene and tolylene diisocyanate or methylene bis-(4-phenyl isocyanate);
B. about 20 to about 35 wt. % of plasticizing material, said material comprising about 3 to about 20 wt. % of coal tar having a distillation point of no lower than about 500° F. or roofing asphalt having substantially no volatiles at temperatures up to about 500° F., and said coal tar and said asphalt having substantially no weight loss for 24 hours at 200° F. or polybutene having a weight loss of about 1% or less when subjected to ASTM D-972 for 10 hours at 210° F. or a mixture thereof, and about 80 to about 97 wt. % of phthalates having a boiling point of 450° F. or higher at 10 mm Hg or aromatic resins or aromatic oil or a mixture thereof;
C. about 20 to about 35 wt. % of filler;
D. about 2 to about 6 wt. % of thixotropic agent; and
E. about 0.5 to about 2.5 wt. % of a glass adhesion promoter.

4,063,003
PRODUCT AND PROCESS FOR PRODUCING FIRE RETARDANT CELLULOSIC MATERIALS
Seymour Hartman, Mahopac, N.Y., assignor to Champion International Corporation, Stamford, Conn.
Filed Sept. 10, 1974, Ser. No. 504,704
Int. Cl.² B32B *21/04*
U.S. Cl. 428—537 **12 Claims**

1. A process for providing fire retardance to a cellulosic substrate comprising forming a solution by digesting plant material with chlorosulfonic acid, deactivating the resultant solution by decomposing the chlorosulfonic acid content thereof with alcohol and applying the deactivated solution to said substrate.

4,063,004
METAL PLATING OF PLASTICS
Edward J. Quinn, East Amherst, N.Y., assignor to Hooker Chemicals & Plastics Corporation, Niagara Falls, N.Y.
Filed Dec. 30, 1975, Ser. No. 645,157
Int. Cl.² C25D *5/56;* **B23P** *3/00*
U.S. Cl. 428—626 **32 Claims**

1. A process for treating a plastic substrate which comprises subjecting the substrate to an organic compound selected from the group consisting of water soluble di and mono ethers of glycols, di and mono ethers of diglycols, carbonates and lactones; subjecting the thus treated substrate to phosphorus sesquisulfide to deposit phosphorus sesquisulfide in the surface of the coated substrate; subjecting the phosphorus sesquisulfide treated surface to a solution of a metal salt or complex thereof so as to form a metal-phosphorus-sulfur coating, wherein the metal is selected from the Groups IB, IIB, IVB, VB, VIB, VIIB and VIII of the Periodic Table.

3. A process wherein the treated substrate resulting from the process of claim 1 is electroplated to deposit an adherent metal coating on the treated substrate.

4. The product of the process of claim 3.

4,063,005
CATHODE FOR MOLTEN SALT BATTERIES
Gleb Mamantov, Knoxville, Tenn., and Roberto Marassi, Camerino, Italy, assignors to The United States of America as represented by the United States Energy Research and Development Administration, Washington, D.C.
Filed Oct. 22, 1976, Ser. No. 734,836
Int. Cl.² H01M *10/39*
U.S. Cl. 429—103 **10 Claims**

1. In an electrochemical battery system comprising a partitioned cell having an anode compartment containing an anode and a cathode compartment containing a cathode and a first molten salt mixture comprising $AlCl_3$ and MCl, M being an alkali metal, the improvement in which said cathode comprises sulfur in the +4 oxidation state and said first molten salt mixture has an $AlCl_3$/MCl mole ratio of greater than 50.0/50.0 and up to 80/20.

4,063,006
HIGH POWER BATTERY WITH LIQUID DEPOLARIZER
Francis G. Murphy, Tiverton, R.I., assignor to The United States of America as represented by the Secretary of the Navy, Washington, D.C.
Filed Feb. 28, 1977, Ser. No. 772,418
Int. Cl.² H01M *6/34*
U.S. Cl. 429—119 **6 Claims**

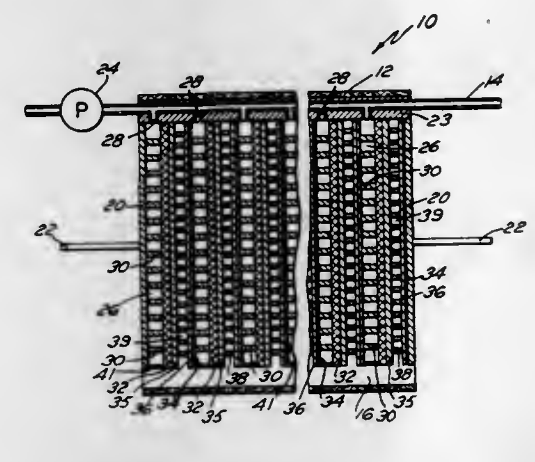

1. A sea water battery comprising:
a solid anode;
a porous flow through cathode;
an entrance chamber adjacent to one side of said cathode;
an electrolyte chamber adjacent to the other side of said cathode and one side of said anode;
first means adapted for supplying reactant through said entrance chamber and said porous flow through cathode to said electrolyte chamber;
second means adapted for supplying an aqueous electrolyte to said electrolyte chamber; and
third means adapted for removing spent reaction products from said chamber.

4,063,007
MOLDED PLASTIC BATTERY CONTAINER
Bernard N. Spiegelberg, Milwaukee, Wis., assignor to Gould Inc., Rolling Meadows, Ill.
Division of Ser. No. 551,295, Feb. 20, 1975, Pat. No. 3,995,008. This application Sept. 7, 1976, Ser. No. 721,037
Int. Cl.² H01M *2/02*
U.S. Cl. 429—176 **2 Claims**

1. A molded plastic battery container comprising
a generally rectangular hollow container with a closed bottom and open top,
a plurality of vertical partitions formed as integral parts of the container bottom and side walls and extending upwardly to the top of the container to divide the container into separate cells,
the external surface of the container bottom forming a plurality of grooves aligned with said partitions, the width of the grooves being at least as wide as the thickness of the top ends of the partitions so that multiple containers nest together when stacked on top of each other with the top

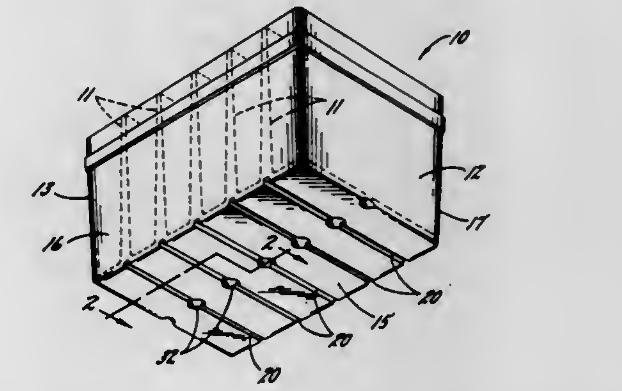

ends of the partitions of one container fitting into the bottom grooves of another container, a depression
formed in the center of each groove due to the seating of feed nozzles therein during the molding of the container, the depression being at least as deep as the groove and the thicknesses of said said partition being increased in the regions of said depression at the lower ends thereof to provide a substantially uniform bottom wall thickness.

4,063,008
SELENIUM-CONTAINING POLYMERS AND PROCESS FOR PRODUCING SAME
Masao Kato, Yokohama, Japan, assignor to Director-General of the Agency of Industrial Science and Technology, Tokyo, Japan
Filed Oct. 26, 1976, Ser. No. 735,773
Claims priority, application Japan, Dec. 6, 1975, 50-145370; Dec. 6, 1975, 50-145371
Int. Cl.² C08F *8/42*
U.S. Cl. 526—47 **2 Claims**

1. A process for the production of selenium-containing polymers which are composed of a recurring unit of the general formula:

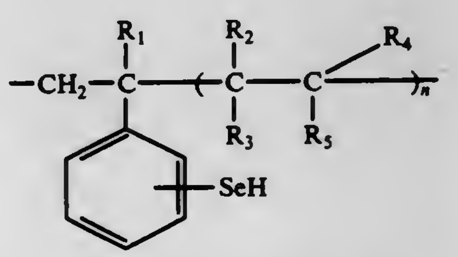

characterized by diazotizing a polymer composed of a recurring unit of the general formula:

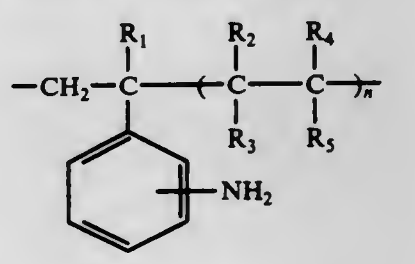

wherein R_1, R_2, R_3 and R_4 each stands for a member selected from the group consisting of hydrogen atom and methyl group, R_5 for a member selected from the group consisting of hydrogen atom, methyl group and a phenyl group, and n is zero or an integer of at least 1, reacting the diazotized polymer with an alkali metal selenocyanate, and then subjecting the reaction product to an alkali treatment.

4,063,009
POLYMERIZATION OF ETHYLENICALLY UNSATURATED HYDROCARBONS

Karl Ziegler, deceased, late of Mulheim (Ruhr), Germany (by Heinz Martin); Heinz Breil, Mulheim (Ruhr), Germany; Erhard Holzkamp, Mulheim (Ruhr), Germany, and Heinz Martin, Mulheim (Ruhr), Germany, assignors to Studiengesellschaft Kohle m.b.H., Mulheim (Ruhr), Germany

Filed July 1, 1958, Ser. No. 745,999
Claims priority, application Germany, Jan. 19, 1954, Z 3942; Aug. 16, 1954, Z 4375; Dec. 27, 1954, Z 4629; Aug. 3, 1954, Z 4348
Int. Cl.² C08F *4/66, 4/68, 10/00*
U.S. Cl. 526—159 **29 Claims**

1. Method for the production of polymers which comprises contacting at least one alpha-olefin selected from the group consisting of ethylene, propylene and isobutylene, at a pressure below 100 atmospheres, with a catalyst formed from a mixture of a first and second component, said first component being present in about 0.1 to 12 times the molar amount of the second component and essentially consisting of a magnesium or zinc di-lower alkyl and said second component essentially consisting of a non-ionized heavy metal compound selected from the group consisting of salts and freshly precipitated oxides and hydroxides of metal of groups IV-B, V-B, and VI-B of the Periodic System, including thorium and uranium, and recovering the high molecular polymer formed.

4,063,010
COPOLYMERS OF OLEFINS OR OF OLEFINS AND NON-CONJUGATED DIENES WITH UNSATURATED DERIVATIVES OF CYCLIC IMIDES

Gilbert Marie, Pau; Andre Lang, Billere, and Gilbert Chapelet, Bron, all of France, assignors to Societe Nationale Elf Aquitaine (SNEA), Courbevoie, France

Filed Dec. 3, 1975, Ser. No. 637,221
Claims priority, application France, Dec. 12, 1974, 49.40949
Int. Cl.² C08F *22/40*
U.S. Cl. 526—169 **16 Claims**

1. A process for obtaining by coordination catalysis a substantially amorphous copolymer containing from 99.9 to about 80% by weight of non-polar units, 80 to 100% of said non-polar units derived from two or more mono-olefins having the formula R—CH=CH₂ wherein R is a hydrogen atom or an alkyl radical having 1 to 16 carbon atoms and up to about 20% are derived from one or more non-conjugated diene selected from the group consisting of 1,4-hexadiene, methyl-2-pentadiene, 1,4-cyclopentadiene, 1,5-cyclooctadiene, tetrahydro-4,7,8,9-indene, bicyclo(3,2,0) heptadiene-2,6, dicyclopentadiene, and alkylidene-5-norbornene-2, and containing from 0.1 to 20% by weight of polar units derived from one or more cyclic imide having the formula

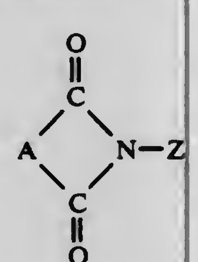

wherein Z is an alkenyl radical having 2 to 16 carbon atoms and wherein A is a hydrocarbon radical selected from the group consisting of saturated bivalent hydrocarbon radicals having 2 to 12 carbon atoms, unsaturated bivalent hydrocarbon radicals having 2 to 12 carbon atoms, amino, halogeno and carboxyl substituted bivalent unsaturated hydrocarbon radicals having 2 to 12 carbon atoms which comprises contacting, at a temperature from −80° C to 150° C, a member selected from the group consisting of a mixture of two or more of said mono-olefins, and a mixture of two or more of said mono-olefins with one or more of said non-conjugated dienes, with one or more of said unsaturated imides in the form of a complex formed with a Lewis acid, in the presence of a catalytic system formed by the association of an organometallic compound of one or more elements of the groups I, II and III of the Mendeleev Periodic Table of the Elements with a compound of a transition metal of groups IV to VIII of said Periodic Table.

2. A substantially amorphous copolymer prepared by the process of claim 1.

4,063,011
ALPHA METHYL STYRENE AND VINYL TOLUENE AND PROCESSES OF PREPARATION

Clarence Clayton Campbell, West Chester, and Dean Almon Finfinger, Forward Township, Allegheny County, both of Pa., assignors to Hercules Incorporated, Wilmington, Del.

Continuation-in-part of Ser. No. 266,386, June 26, 1972, Pat. No. 3,956,250, which is a continuation-in-part of Ser. No. 135,492, April 19, 1971, abandoned, and Ser. No. 52,139, July 2, 1970, abandoned, which is a division of Ser. No. 831,540, June 9, 1969, Pat. No. 3,630,981, said Ser. No. 135,492, is a continuation-in-part of Ser. No. 831,540,. This application Feb. 6, 1976, Ser. No. 655,810
The portion of the term of this patent subsequent to May 11, 1993, has been disclaimed.
Int. Cl.² C08F *210/00, 212/00*
U.S. Cl. 526—194 **4 Claims**

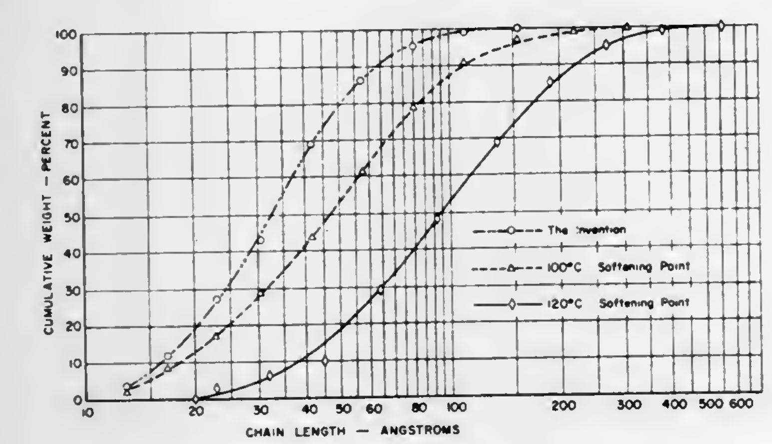

1. A resinous composition consisting essentially of copolymers of alpha methyl styrene and vinyl toluene wherein the weight ratio of vinyl toluene to alpha methyl styrene is in the range of 2.5:1 to 4.5:1, said composition being characterized by a softening point (Ring and Ball) in the range of about 10° C. to 90° C. and being derived by use of an acid clay catalyst.

2. A resinous composition consisting essentially of copolymers of alpha methyl styrene and vinyl toluene wherein the weight ratio of vinyl toluene to alpha methyl styrene is in the range of 2.5:1 to 4.5:1, said composition being characterized by a softening point (Ring and Ball) in the range of about 25.5° C. to about 89° C. and being derived by use of an acid clay catalyst.

4,063,012
POLYMERIZATION OF ETHYLENICALLY UNSATURATED MONOMERS EMPLOYING CATALYST OF ALIPHATIC α-(HYDROPEROXY)AZO COMPOUNDS AND SALTS THEREOF

Ronald Edward MacLeay, Williamsville, and Chester Stephen Sheppard, Tonawanda, both of N.Y., assignors to Pennwalt Corporation, Pa.

Division of Ser. No. 453,445, March 21, 1974, Pat. No. 4,010,152, which is a continuation-in-part of Ser. No. 88,249, Nov. 9, 1970, abandoned, which is a continuation-in-part of Ser. No. 725,180, April 29, 1968, abandoned, which is a continuation-in-part of Ser. No. 616,158, Feb. 15, 1967, abandoned, which is a continuation-in-part of Ser. No. 409,306, Nov. 5, 1964, abandoned. This application Apr. 19, 1976, Ser. No. 678,088
Int. Cl.² C08F *4/00, 4/04, 14/06*
U.S. Cl. 526—219 **3 Claims**

1. In a process for the homo- or copolymerization of ethylenically unsaturated monomers which are responsive at suitable temperatures to free radical generators as polymerization initiators, the improvement which comprises employing as the free radical generator a compound of the formula

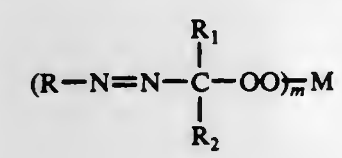

wherein:

M is selected from the group consisting of hydrogen, alkali metal and alkaline earth metal;

m is the valence of M;

R is selected from the group consisting of C_1 - C_{12} alkyl, C_3 - C_{12} cyclo-, bicyclo- or tricycloalkyl, and C_7 - C_9 aralkyl;

R_1 and R_2 are separately selected from the group consisting of hydrogen, C_1 - C_8 alkyl, C_3 - C_{12} cyclo-, bicyclo- or tricycloalkyl, C_7 - C_{12} aralkyl, C_6 - C_{14} aryl and 5 - 6 membered heterocyclic wherein the hetero atom is O, S or N, and R_1 and R_2 taken together form C_3 - C_7 alkylene; and

one or more of each of R, R_1 and R_2 can be substituted with a member selected from the group consisting of lower alkoxy, hydroxy, lower alkoxycarbonyl, lower acyloxy, halogen, cyano, dimethylamido and lower alkylsulfonato.

4,063,013
t-ALKYL PERESTERS OF t-HYDROPEROXIDES CATALYSTS FOR POLYMERIZATION OF UNSATURATED MONOMERS

Ronald L. Friedman, San Rafael, and Roger N. Lewis, Martinez, both of Calif., assignors to Argus Chemical Corporation, Brooklyn, N.Y.

Division of Ser. No. 333,904, Feb. 20, 1973, which is a continuation-in-part of Ser. No. 157,683, June 28, 1971, Pat. No. 3,726,847, which is a continuation-in-part of Ser. No. 725,931, May 1, 1968, Pat. No. 3,624,123. This application Apr. 28, 1977, Ser. No. 791,819
Int. Cl.² C08F *4/28, 14/06, 110/02*
U.S. Cl. 526—227 **5 Claims**

1. In the polymerization of a monomer mass containing a monomer selected from the group consisting of styrene, vinyl chloride, vinyl acetate and ethylene, the improvement in which the polymerization of said monomer mass is initiated with t-alkyl perester of t-hydroperoxide comprising an initiating amount of at least one perester of the formula:

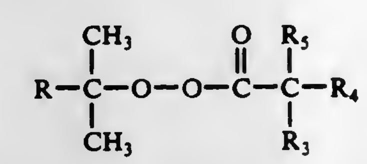

wherein R_3, R_4 and R_5 are the same or different alkyl groups of from 1 to 10 carbon atoms provided not more than one of R_3, R_4 and R_5 is methyl, and R_3, R_4 and R_5 together with the associated tertiary carbon atom and carbonyl group form a neodecanoate group; and R is straight chain alkyl of 2–5 carbon atoms.

4,063,014
4″-O-SULFONYL ERYTHROMYCIN-9-O-OXIME DERIVATIVES

Robert Hallas; Jerry Roy Martin, and John Soloman Tadanier, all of Waukegan, Ill., assignors to Abbott Laboratories, North Chicago, Ill.

Filed June 12, 1975, Ser. No. 586,127
Int. Cl.² C07H *17/08;* **A61K** *31/70*
U.S. Cl. 536—9 **6 Claims**

1. A 4″-O-sulfonyl erythromycin derivative of the following structural formula:

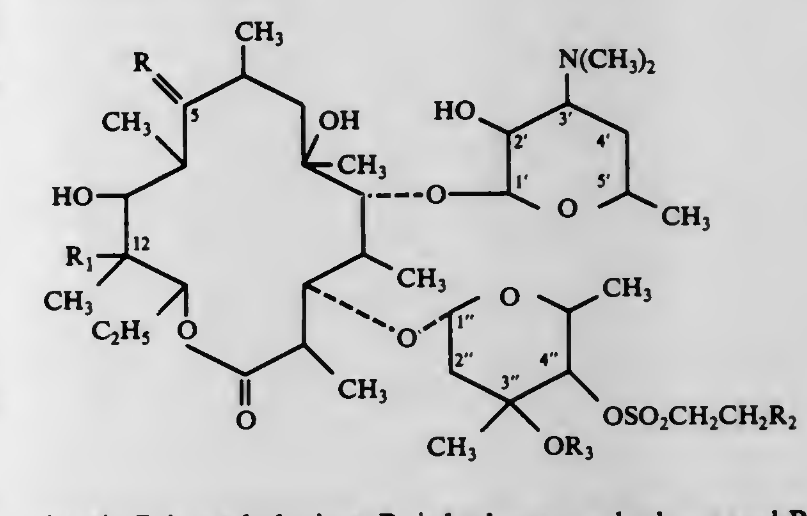

wherein R is methyloxime, R_1 is hydrogen or hydroxy and R_2 is, phthalimido, alkanoylamido, nitro- or amino-substituted-benzoylamido or -benzenesulfamido, phenyl-ureido or -thioureido wherein said phenyl group may carry dimethylamino, methoxy, chloro or nitro, or CBZ-glycylamido and R_3 is hydrogen or methyl.

4,063,015
GARAMINE AND DERIVATIVES THEREOF

Alan K. Mallams, West Orange, N.J., assignor to Schering Corporation, Kenilworth, N.J.

Continuation of Ser. No. 391,914, Aug. 27, 1973, abandoned, which is a continuation-in-part of Ser. No. 296,434, Oct. 10, 1972, abandoned, which is a continuation-in-part of Ser. No. 327,263, Jan. 29, 1973, abandoned, and a continuation-in-part of Ser. No. 308,061, Nov. 20, 1972, abandoned. This application July 17, 1975, Ser. No. 596,799
Int. Cl.² C07H *15/22*
U.S. Cl. 536—17 **18 Claims**

1. A compound represented by the structural formula:

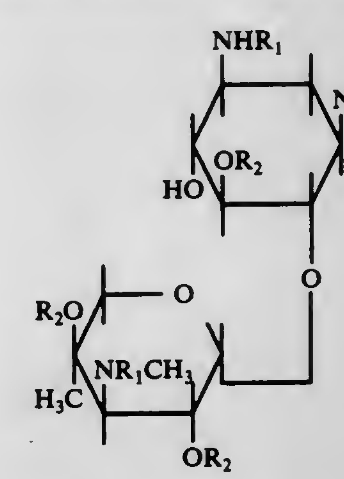

wherein R_1 is an amino protective group or hydrogen and R_2 is an hydroxy protective group or hydrogen.

4,063,016

CHITIN COMPLEXES WITH ALCOHOLS AND CARBONYL COMPOUNDS

Paul R. Austin, Wilmington, Del., assignor to University of Delaware, Newark, Del.

Filed Dec. 15, 1975, Ser. No. 640,583

Int. Cl.² C08B *37/08*

U.S. Cl. 536—20 **7 Claims**

1. A complex of chitin with an oxygen-containing complexing agent containing up to 10 carbon atoms selected from the group consisting of saturated aliphatic and alicyclic alcohols, aldehydes, and ketones, said complex having a sharp endothermic heat change when subjected to differential thermal analysis.

4,063,017

POROUS CELLULOSE BEADS AND THE IMMOBILIZATION OF ENZYMES THEREWITH

George T. Tsao, and Li Fu Chen, both of West Lafayette, Ind., assignors to Purdue Research Foundation, West Lafayette, Ind.

Filed Apr. 22, 1976, Ser. No. 679,497

Int. Cl.² C08B *15/10, 16/00*

U.S. Cl. 536—57 **22 Claims**

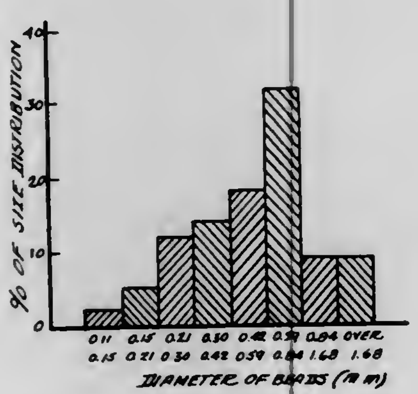

1. A process for the preparation of porous cellulose beads suitable for use as a carrier of enzymes and other biological agents which comprises the steps of:

a. dissolving a hydrolyzable cellulose derivative in an inert organic, water-miscible solvent selected from the group of a mixture of acetone and dimethylsulfoxide and a mixture of acetone and formamide to form a solution having a density greater than that of a precipitation solution the cellulose derivative to solvent ratio ranging from 1:20 to 1:3 weight/volume;

b. distributing said solution in the form of droplets into a precipitation solution whereby said cellulose derivative is precipitated in the form of uniformly porous beads;

c. separating the precipitated beads from said solution;

d. washing the separated porous beads with water;

e. hydrolyzing the washed beads to convert the beads to cellulose and to increase the active sites for attachment of enzymes and other biological agents;

f. washing the hydrolyzed beads to obtain porous cellulose beads having a uniformly distributed void space greater than 50% by volume.

4,063,018

PROCESS FOR PREPARING ALKALI METAL SALT OF CARBOXYMETHYL CELLULOSE ETHER

Kouichi Ohnaka; Shigeo Yokoi, and Takeo Ohmiya, all of Himeji, Japan, assignors to Daicel Ltd., Sakai, Japan

Filed Apr. 2, 1976, Ser. No. 673,211

Claims priority, application Japan, Apr. 7, 1975, 50-42012; Apr. 7, 1975, 50-42013

Int. Cl.² C08B *11/00*

U.S. Cl. 536—98 **19 Claims**

1. A process for preparing an alkali metal salt of carboxymethyl cellulose, which comprises the steps of: dissolving a water-soluble alkali in a solvent mixture of isopropanol and water to obtain a liquid alkaline mercerization medium, then adding non-pulverized cellulose to said mercerization medium in an amount such that the weight of said mixture of isopropanol and water is from 21 to 30 times the weight of said cellulose, subjecting the mixture of cellulose and said mercerization medium to high speed shearing and wet grinding to pulverize the cellulose in situ in contact with the mercerization medium to obtain a slurry of cellulose in said mercerization medium and continuing said high speed shearing and wet grinding while maintaining said slurry at from about zero to 45° C for from about 30 to 120 minutes to transform said cellulose in said slurry to an alkali cellulose, and then adding monochloroacetic acid or sodium monochloroacetate to said slurry and mixing it therein under conditions effective to transform said alkali cellulose to an alkali metal salt of carboxymethyl cellulose ether, and then recovering said alkali metal salt of carboxymethyl cellulose ether from the reaction mixture.

4,063,019

[[[(2,4-DIOXO-1-IMIDAZOLIDINYL)AMINO]CARBONYL]AMINO]-ACETYLCEPHALOSPORIN DERIVATIVES

Hermann Breuer, and Uwe D. Treuner, both of Regensburg, Germany, assignors to E. R. Squibb & Sons, Inc., Princeton, N.J.

Filed Mar. 30, 1976, Ser. No. 671,788

Int. Cl.² C07D *501/36*

U.S. Cl. 544—27 **12 Claims**

1. A compound of the formula

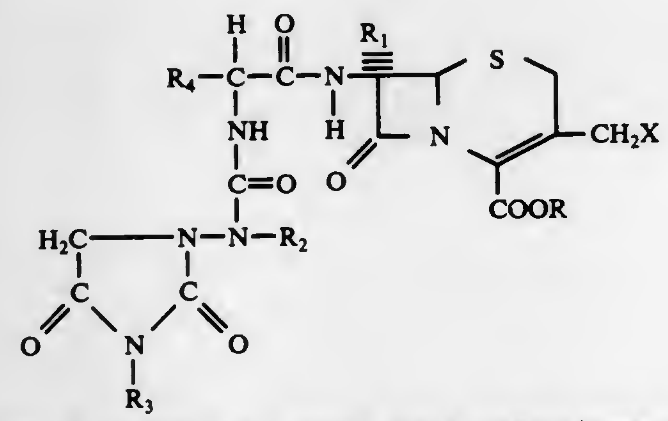

wherein R is hydrogen, lower alkyl, phenyl-lower alkyl, diphenyl-lower alkyl, tri(lower alkyl)silyl, trihaloethyl, aluminum, alkali metal, alkaline earth metal, phenyl-lower alkylamine, lower alkylamine, tri(lower alkyl)amine, N-lower alkylpiperidine or

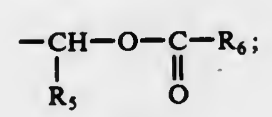

R_1 is in the α-configuration and is hydrogen or methoxy; R_2, R_3 and R_5 each is hydrogen or lower alkyl; R_4 is hydrogen, lower alkyl, cyclo-alkyl of 3 to 7 carbons, cycloalkenyl of 3 to 7 carbons, cycloalkadienyl of 6 or 7 carbons, phenyl, phenyl-lower alkyl, substituted phenyl or phenyl-lower alkyl wherein said phenyl substituent is one or two members selected from the group consisting of halogen, lower alkyl, lower alkoxy and hydroxy, or a mono substituted or unsubstituted heterocyclic selected from the group consisting of 2-thienyl, 3-thienyl, 2-furyl, 3-furyl, 2-pyridyl, 3-pyridyl and 4-pyridyl wherein said heterocyclic substituent is attached at an available carbon atom and is halogen or lower alkyl; R_6 is lower alkyl; and X is a heterothio group selected from the group consisting of

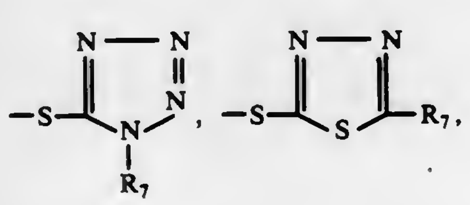

-continued

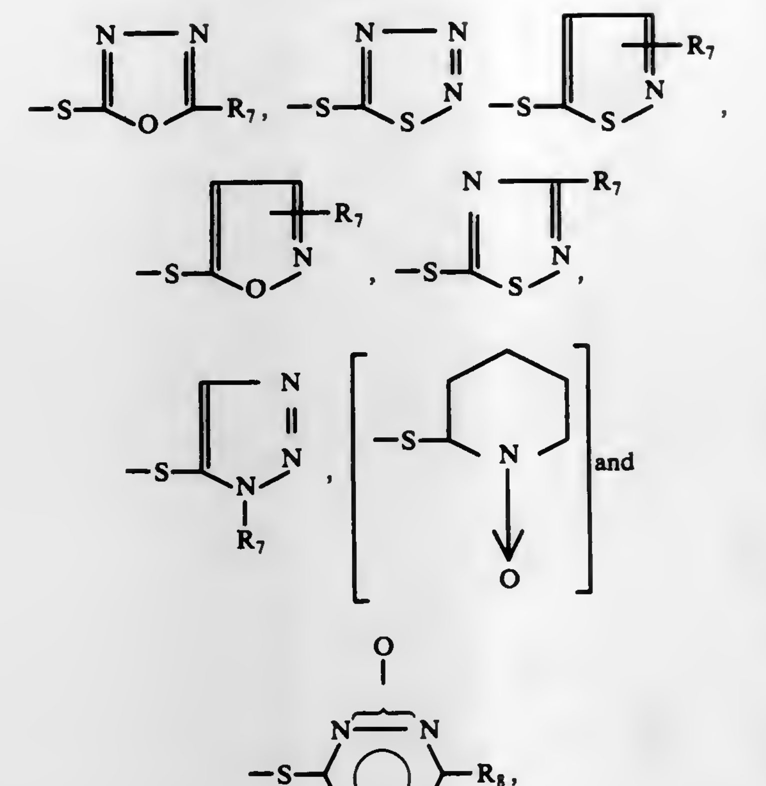

wherein R_7 is hydrogen or lower alkyl and R_8 is hydrogen, lower alkyl, methoxy, hydroxy or halogen.

4,063,020

MIXED HYDROXYMETHYL-HYDROXYALKYL ISOCYANURATES

Marinus J. A. M. denOtter, Munstergeleen, and Albert A. van Geenen, Brunssum, both of Netherlands, assignors to Stamicarbon, B.V., Geleen, Netherlands

Filed June 10, 1976, Ser. No. 694,645

Claims priority, application Netherlands, June 12, 1975, 7506982

Int. Cl.² C07D *251/34*

U.S. Cl. 544—221 **18 Claims**

3. Bis(hydroxymethyl)-mono(2-hydroxypropyl) isocyanurate.

4. Hydroxymethyl-bis(2-hydroxypropyl) isocyanurate.

4,063,021

METHOD FOR THE SYNTHESIS OF UREAS

Gioacchino Cipriani, and Carlo Neri, both of San Donato Milanese (Milan), Italy, assignors to ANIC, S.p.A., Palermo, Italy

Filed Dec. 10, 1975, Ser. No. 639,441

Claims priority, application Italy, Dec. 10, 1974, 30341/74

Int. Cl.² C07D *233/36;* **C07C** *127/19*

U.S. Cl. 548—317 **4 Claims**

1. A method for the synthesis of a urea having the formula:

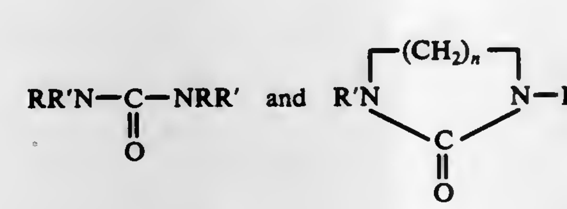

wherein *n* is 2, 3, or 4, R is hydrogen, R' is phenyl and R'' is lower alkyl, which consists in pyrolyzing the corresponding carbamate having the formula:

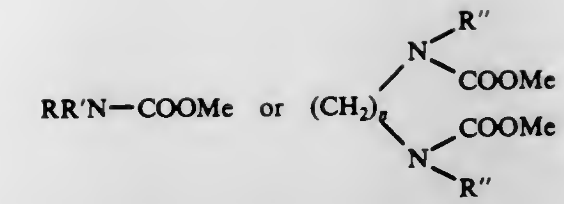

wherein *n*, R, R' and R'' have the meaning given above and Me is an alkali metal or an alkaline earth metal.

4,063,022

ANTISECRETORY 2-IMIDAZOLIDINONES

Thomas J. Schwan, and Nelson J. Miles, both of Norwich, N.Y., assignors to Morton-Norwich Products, Inc., Norwich, N.Y.

Filed Nov. 22, 1976, Ser. No. 743,677

The portion of the term of this patent subsequent to Jan. 13, 1993, has been disclaimed.

Int. Cl.² C07D *233/34*

U.S. Cl. 548—317 **3 Claims**

1. A compound of the formula: ,02/0010

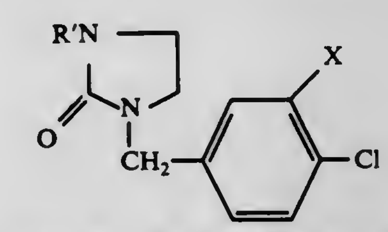

wherein X is chloro or trifluoromethyl and R' is hydrogen or methyl.

4,063,023

PROCESS FOR PREPARING 4-(HYDROXYMETHYL)IMIDAZOLE COMPOUNDS

Elvin L. Anderson, Moorestown, N.J.; Wilford L. Mendelson, Philadelphia, and George R. Wellman, Warminster, both of Pa., assignors to SK&F Lab Co., Carolina, P.R.

Continuation-in-part of Ser. No. 606,270, Aug. 20, 1975, abandoned. This application May 27, 1976, Ser. No. 690,476

Int. Cl.² C07D *233/64*

U.S. Cl. 548—342 **11 Claims**

1. A process for the preparation of a 4-(hydroxymethyl-)imidazole compound of the formula:

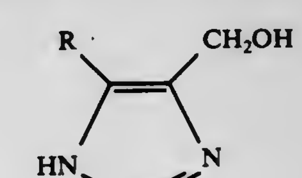

in which R is hydrogen or lower alkyl, which comprises reducing a 4-imidazolecarboxylic acid ester of the formula:

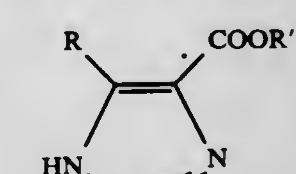

in which R is as defined above and R' is lower alkyl, using an alkali metal or calcium in liquid ammonia with an additional proton source.

4,063,024
POLYOXYALKYLENE FLUOROALKYLTRIMELLITATES
Stanley Robert Sandler, Springfield, Pa., assignor to Pennwalt Corporation
Division of Ser. No. 596,779, July 17, 1975, Pat. No. 3,994,951. This application Sept. 10, 1976, Ser. No. 722,178
Int. Cl.[2] C07C *69/76, 103/24*
U.S. Cl. 560—26 **14 Claims**

1. A compound of the formula:

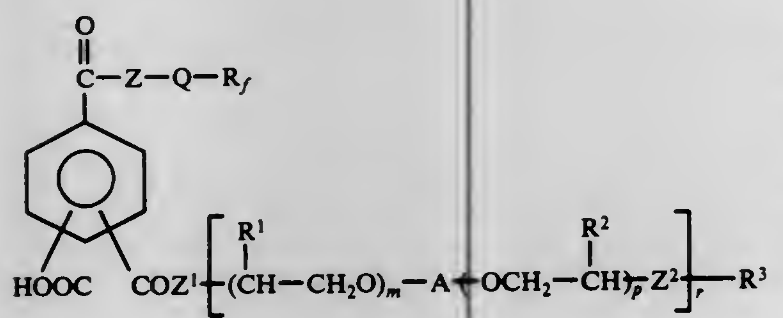

wherein:
a. the ring is 1, 3, 4 tri-substituted,
b. Z is O, Z^1 is selected from O or NR, and Z^2 is selected from O, S or NR where R is H or an alkyl of 1–4 carbon atoms,
c) Q is selected from $-(CH_2-)_{1-10}$, $-C_2H_4-N(R)-C(=O)-$, or $-C_2H_4-N(R)-SO_2-$,
d. R^1 and R^2 are moieties independently selected from hydrogen or an alkyl having 1 to 4 carbon atoms,
e. *m* and *p* are independent integers from 0 to 30 describing repeating units of polyoxyalkylene groups that form a chain with at least one polyoxyalkylene chain of at least three repeating units being present.
f. R^1 and R^2 are one or more of said moieties within the repeating units m and p,
g. R_f is selected from the group consisting of a linear or branched perfluoroalkyl, a linear or branched monochloroperfluoroalkyl or a linear or branched perfluoroisoalkoxyalkyl wherein each member of the group has 3 to 20 carbon atoms,
h. r is an integer from 1 to 10,
i. A is a linking group selected from the group consisting of the acyl segment of alkanoic or mono or dicyclic aromatic polycarboxylic acids, alkanoic or mono or dicyclic aromatic anhydrides or alkanoic or mono or dicyclic carbomates, linear alkylene of 2 to 12 carbon atoms or a cyclic alkylene of 5–8 carbon atoms or a branched alkylene of 3–12 carbon atoms, and
j. R^3 is selected from H or an alkyl of 1 to 20 carbon atoms.

4,063,025
4-SUBSTITUTED AMINO-α-AMINOMETHYLBENZYL ALCOHOL DERIVATIVES
Masuo Murakami; Kozo Takahashi, both of Tokyo; Kiyoshi Murase, Urawa; Toshiyasu Mase, Tokyo; Hisashi Ida, Urawa, and Toichi Takenaka, Tokyo, all of Japan, assignors to Yamanouchi Pharmaceutical Co., Ltd., Tokyo, Japan
Filed Jan. 23, 1976, Ser. No. 651,738
Claims priority, application Japan, June 2, 1975, 50-14993; May 24, 1975, 50-62207
Int. Cl.[2] C07C *125/06*
U.S. Cl. 560—29 **10 Claims**

1. A 4-substituted amino-α-aminomethylbenzyl alcohol derivative represented by the formula:

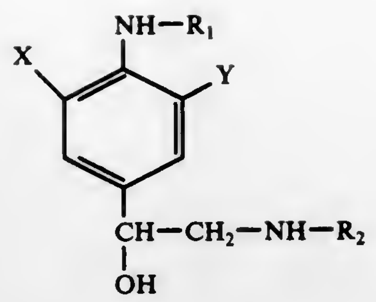

wherein X represents a halogen atom; Y represents a hydrogen atom or a halogen atom; R_1 represents a lower alkoxycarbonyl group, a lower alkoxy-substituted lower alkoxycarbonyl group, a phenyl-substituted lower alkoxycarbonyl group, or a cycloalkyloxycarbonyl group; and R_2 represents a lower alkyl group, a cycloalkyl group, or a group shown by the formula

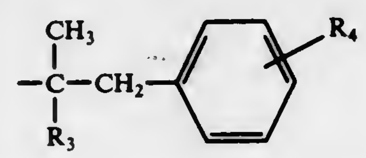

wherein R_3 represents a hydrogen atom or a lower alkyl group and R_4 represents a hydrogen atom, a hydroxy group, or a lower alkoxy group and the pharmaceutically acceptable nontoxic salts thereof.

4,063,026
4,5-CIS-DIDEHYDRO-PGE$_1$ ANALOGS
Barney J. Magerlein, Portage, Mich., assignor to The Upjohn Company, Kalamazoo, Mich.
Division of Ser. No. 440,629, Feb. 7, 1974, Pat. No. 3,933,889, which is a continuation-in-part of Ser. No. 247,993, April 27, 1972, abandoned. This application Nov. 7, 1975, Ser. No. 629,882
Int. Cl.[2] C07C *177/00*
U.S. Cl. 560—121 **22 Claims**

1. An optically active compound of the formula

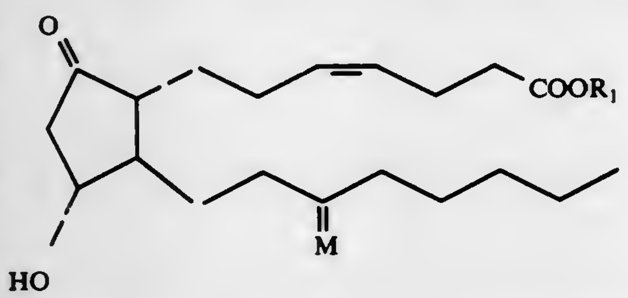

or a racemic compound of that formula and the mirror image thereof, wherein M is

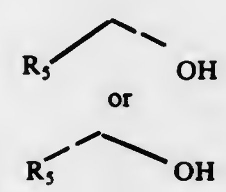

wherein R_5 is hydrogen, methyl, or ethyl; and wherein R_1 is hydrogen or alkyl of one to 12 carbon atoms, inclusive, cycloalkyl of 3 to 10 carbon atoms, inclusive, aralkyl of 7 to 12 carbon atoms, inclusive, phenyl, or phenyl substituted with one, 2, or 3 chloro or alkyl of one to 4 carbon atoms, inclusive; including the lower alkanoates thereof, and the pharmacologically acceptable salts thereof when R_1 is hydrogen.

5. An optically active compound of the formula

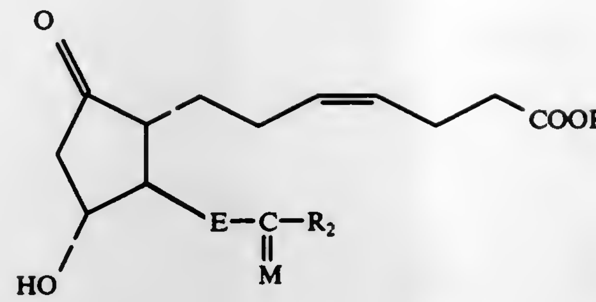

or a racemic compound of that formula and the mirror image thereof, wherein M is

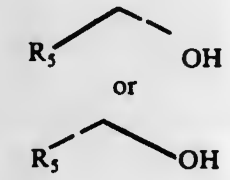

wherein R_5 is hydrogen, methyl, or ethyl; wherein R_1 is hydrogen or alkyl of one to 12 carbon atoms, inclusive, cycloalkyl of 3 to 10 carbon atoms, inclusive, aralkyl of 7 to 12 carbon atoms, inclusive, phenyl, or phenyl substituted with one, 2, or 3 chloro or alkyl of one to 4 carbon atoms, inclusive; wherein R_2 is alkyl of 2 to 4 carbon atoms, inclusive, substituted with one or 2 fluoro; and wherein E is trans—CH=CH— or —CH_2CH_2—; including the lower alkanoates thereof, and the pharmacologically acceptable salts thereof when R_1 is hydrogen.

11. An optically active compound of the formula

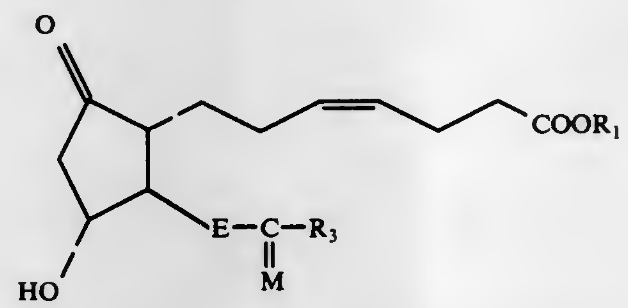

or a racemic compound of that formula and the mirror image thereof, wherein M is

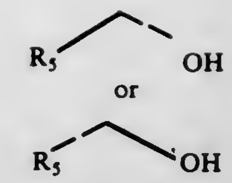

wherein R_5 is hydrogen, methyl, or ethyl; wherein R_1 is hydrogen or alkyl of one to 12 carbon atoms, inclusive, cycloalkyl of 3 to 10 carbon atoms, inclusive, aralkyl of 7 to 12 carbon atoms, inclusive, phenyl, or phenyl substituted with one, 2, or 3 chloro or alkyl of one to 4 carbon atoms, inclusive; wherein R_3 is alkyl of 5 carbon atoms substituted with one or 2 fluoro; and wherein E is trans—CH=CH— or —CH_2CH_2—; including the lower alkanoates thereof, and the pharmacologically acceptable salts thereof when R_1 is hydrogen.

17. An optically active compound of the formula

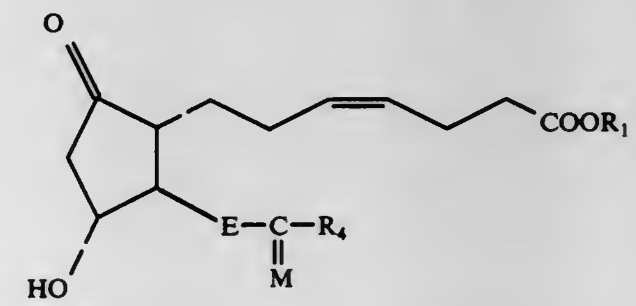

or a racemic compound of that formula and the mirror image thereof, wherein M is

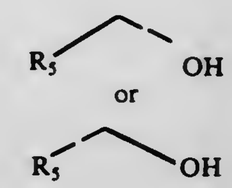

wherein R_5 is hydrogen, methyl, or ethyl; wherein R_1 is hydrogen or alkyl of one to 12 carbon atoms, inclusive, cycloalkyl of 3 to 10 carbon atoms, inclusive, aralkyl of 7 to 12 carbon atoms, inclusive, phenyl, or phenyl substituted with one, 2, or 3 chloro or alkyl of one to 4 carbon atoms, inclusive, wherein R_4 is alkyl of 6 to 10 carbon atoms, inclusive, substituted with one or 2 fluoro; and wherein E is trans—CH=CH— or —CH_2CH_2—; including the lower alkanoates thereof, and the pharmacologically acceptable salts thereof when R_1 is hydrogen.

4,063,027

METHOD OF AND APPARATUS FOR MONITORING FOR ELECTRODE DISPLACEMENT IN THE JOULE EFFECT HEATING OF HEAT SOFTENABLE MATERIAL

Eugene C. Varrasso, and John F. Maddux, both of Heath, Ohio, assignors to Owens-Corning Fiberglas Corporation, Toledo, Ohio

Continuation-in-part of Ser. No. 630,841, Nov. 10, 1975, Pat. No. 3,984,611, which is a continuation of Ser. No. 514,549, Oct. 15, 1974, abandoned. This application July 6, 1976, Ser. No. 702,543

Int. Cl.[2] C03B *5/02*

U.S. Cl. 13—6 **13 Claims**

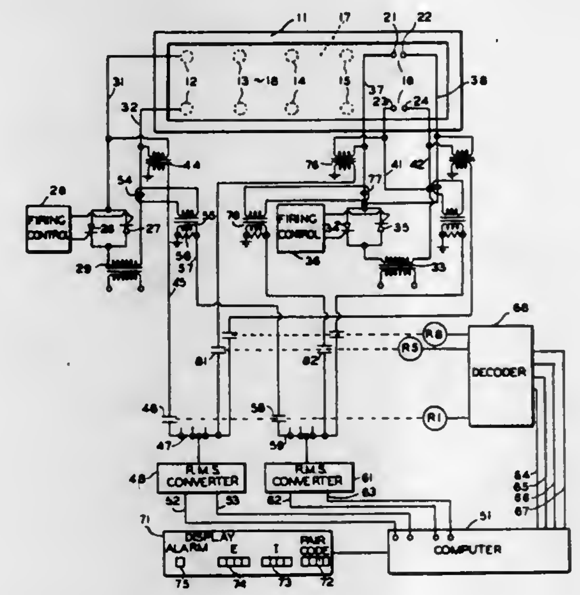

1. The method of monitoring the state of electrodes immersed in a mass of heat softenable material for Joule effect heating of the material which comprises ascertaining electrical parameters of the electrode and the material in proximity to the electrode when the electrode is initially utilized in the material; monitoring electrical parameters of the electrode and the material in proximity to the electrode during the useful life of the electrode; and ascertaining that the electrode has been displaced from its initial orientation in the mass as a function of the rate of change of the monitored electrical parameters and the magnitude of change of the monitored electrical parameters.

4,063,028

SUSPENDED ROOF FOR ELECTRIC ARC FURNACE

Levi S. Longenecker, 61 Mayfair Drive, Pittsburgh, Pa. 15228

Filed June 14, 1976, Ser. No. 695,365

Int. Cl.[2] F27D *1/02*

U.S. Cl. 13—35 **28 Claims**

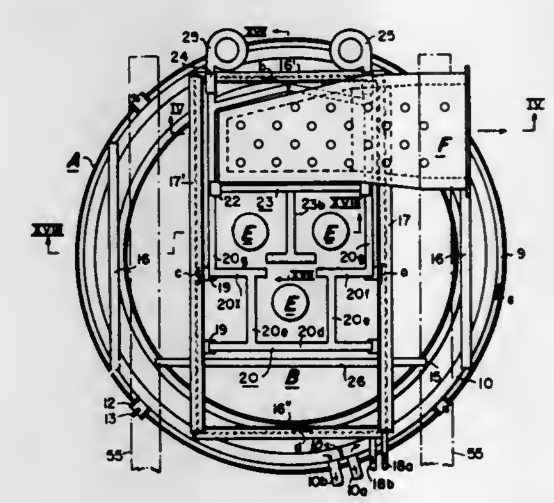

1. An improved liftable roof for an electric furnace and the like that has a mouth ledge portion with respect to which the roof is to be lowered into a closing-off position and lifted into an open position which comprises, an outer fluid-cooled metal roof ring adapted to rest on the ledge portion, an inner metal roof ring in a radially-inwardly spaced relation with respect to said outer ring, a first group of refractory tile members defining a roof skirt positioned between and carried by said inner and outer rings, an overhead frame structure connecting said inner and outer rings in a secure relation with respect to each other, a substantially centrally disposed heat-resistant supplemental metal frame structure carried within the confines of and by said overhead frame structure, a second group of refractory tile members defining a central roof part within the confines of said inner ring and having a fume exhaust hole portion and spaced-apart electrode hole portions therein, and said supplemental metal frame structure carrying refractory tile members of said second group adjacent said fume exhaust and electrode hole portions.

4,063,029

ARRANGEMENT FOR EFFECTING A VARIABLE MODIFICATION OF INFORMATION USED TO CONTROL A PRINTER UNIT OF A TELEPRINTER

Klaus Elstner, Munich, Germany, assignor to Siemens Aktiengesellschaft, Berlin & Munich, Germany

Filed July 16, 1976, Ser. No. 705,821

Claims priority, application Germany, Sept. 29, 1975, 2543468

Int. Cl.[2] H04L *13/08*

U.S. Cl. 178—17.5 **8 Claims**

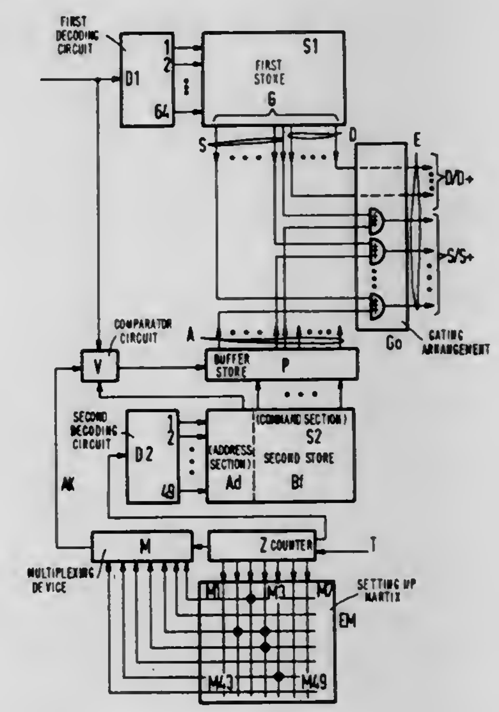

1. An arrangement for effecting a variable modification in information used to control a printer unit of a teleprinter, comprising:

a. a first store for controlling the printer unit, said store containing information for basic functions required to control the printer unit;
b. a first decoding circuit for analyzing received teleprinter characters and for driving the first store;
c. a second store containing information required to modify the basic functions;
d. a counter;
e. a second decoding circuit for analyzing the count reached by the counter and for driving the second store;
f. a setting up matrix scanned via the counter;
g. a multiplexing circuit connected with the counter and the setting up matrix in which a selection criterion is formed by means of a result from scanning the setting up matrix; and
h. a comparator device in which the selection criterion resulting from the scanning of the setting up matrix and an address read out from the second store are compared with a received teleprinter character, and, if the results are positive, the information contained in the second store being relayed to the printer unit.

4,063,030

DETECTION CIRCUIT FOR SIGNIFICANT PEAKS OF SPEECH SIGNALS

Jean-Frédéric Zurcher, 34, Residence Corlay, Lannino, France (22300)

Filed Oct. 26, 1976, Ser. No. 735,788

Claims priority, application France, Nov. 25, 1975, 75.36006

Int. Cl.² G10L *1/00*

U.S. Cl. 179—1 SC **4 Claims**

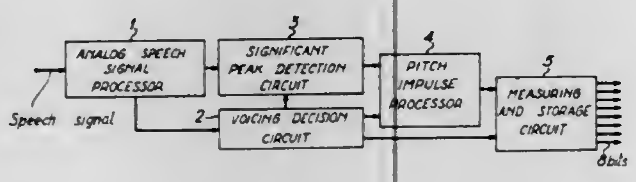

1. A detection circuit for the detection of the significant peaks of a speech signal, comprising means for detecting the positive peaks and means for detecting the negative peaks of said speech signal, two peak charging circuits respectively associated with said detecting means, each of said peak charging circuits comprising a first integrator for storing peaks and providing a first relatively large discharge time constant, a comparator comparing the detected speech signal and the output signal of the said first integrator, and a second integrator for storing peaks and providing a second relatively smaller discharge time constant than said first discharge time constant, the discharge of said first integrator being effected up to a voltage equal to the output voltage of said second integrator during said first discharge time constant and the discharge of said second integrator being effected down to a voltage depending on the output voltage of said first integrator during said second discharge time constant.

4,063,031

SYSTEM FOR CHANNEL SWITCHING BASED ON SPEECH WORD VERSUS NOISE DETECTION

Gene Grunza, Blackwood, N.J., assignor to Threshold Technology, Inc., Delran, N.J.

Filed Apr. 19, 1976, Ser. No. 678,299

Int. Cl.² H04B *1/06;* **H04K** *5/20*

U.S. Cl. 179—1 P **10 Claims**

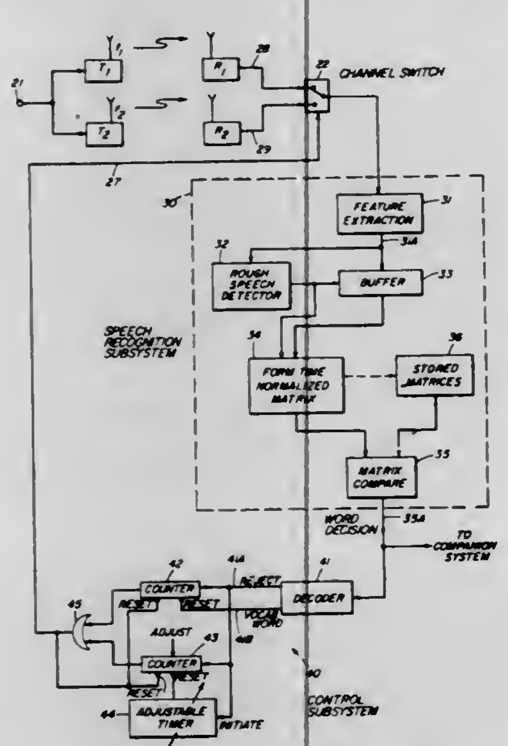

1. Apparatus for transmitting and receiving audio signals including recognizable speech information of a predetermined restricted vocabulary, comprising:

a. first and second parallel channels;

b. means for applying said audio signals to said first and second channels;

c. channel selecting means responsive to a control signal for selecting said first or second channel;

d. a speech recognition subsystem responsive to the audio signals transmitted over the selected channel, said speech recognition subsystem including means for determining the presence of speech-like sounds and for generating a speech-indicative signal as a function thereof, and means responsive to said speech-indicative signal for comparing portions of said audio signals with said predetermined vocabulary to determine the probable occurrence of a word from among said predetermined vocabulary and for thereupon generating an occurrence indication signal; and

e. control means coupled to said speech recognition subsystem for generating said control signal as a function of said speech-indicative signal and said occurrence indication signal; whereby said control signal is operative, in response to the presence of extraneous signals on a channel being utilized, to effect switching to the other channel.

4,063,032

CONSTANT POWER BALANCE CONTROLS FOR STEREOPHONIC AND QUADRAPHONIC SOUND SYSTEMS

Martin Edmund George Willcocks, Somersham, England, assignor to John C. Bogue, Santa Monica and Wesley Ruggles, Jr., Beverley Hills, both of, Calif.

Filed Mar. 16, 1976, Ser. No. 667,455

Int. Cl.² H04R *5/00*

U.S. Cl. 179—1 GQ **5 Claims**

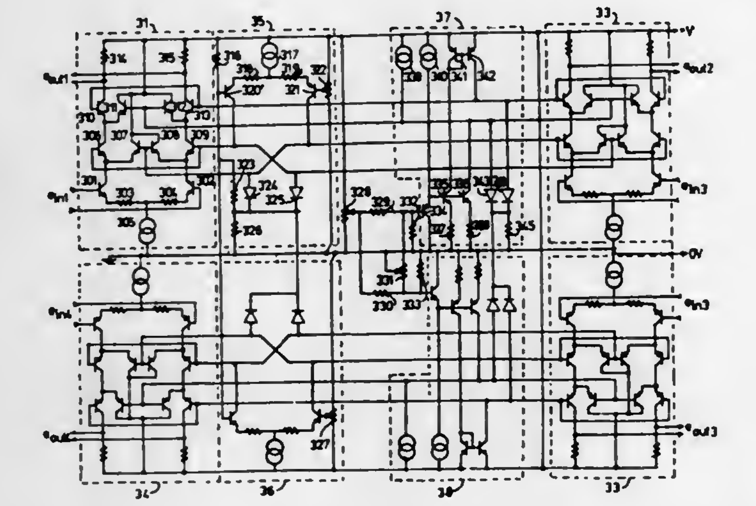

1. In apparatus for reproducing on two loudspeaker the audio signals contained in two independent channels, a balance control circuit comprising:

first and second differential voltage-to-current converters each having a pair of input terminals to which the respective one of said first and second audio input signals is applied differentially, and a pair of output terminals, and being operative to provide at its output terminals a pair of output currents having equal direct current components and equal signal current components in antiphase,

first, second, third and fourth current-splitting means, each having an input terminal, a first and a second output terminal, a first and a second control terminal, and being operative to split any current flowing through its input terminal into a first output current at its first output terminal and a second output current at its second output terminal in a predetermined constant ratio dependent on the voltage applied between its first and second control terminals,

the input terminals of said first and second current-splitting means being connected respectively to the first and second output terminals of said first differential voltage-to-current converter and the input terminals of said third and fourth current-splitting means being connected respectively to the first and second output terminals of said second differential voltage-to-current converter,

first, second, third and fourth load resistors respectively connected between said first output terminal of said first, second, third and fourth current-splitting means and a common signal ground terminal, said second output terminal of each of said first, second, third and fourth current-splitting means being connected directly to said common signal ground terminal,

said first control terminals of said first and second current-splitting means being connected together with said second control terminals of said third and fourth current-splitting means to a common first control terminal, and

said second control terminals of said first and second current splitting means being connected together with said first control terminals of said third and fourth current-splitting means to a common second control terminal,

the first output audio signals from the balance control circuit being taken differentially between said first output terminals of said first and second current-splitting means and the second output audio signal being taken differentially between said first output terminals of said third and fourth current-splitting means,

each of said current-splitting means being configured to split the input current applied to its input terminal into two output currents in a ratio determined by the control voltage applied between its first and second control terminals, the fraction of the input current which appears at the first output terminal being approximately equal to $(1 + x)/(1.414 + 0.586x)$ where x is the ratio of the control voltage applied between the first and second control terminals to the maximum value of control voltage which may be applied thereto, and x may be varied between -1 and 1 by varying the control voltage,

the whole circuit being operative to provide at its differential outputs first and second audio output signals which are identical in content to said first and second input signals respectively but are amplified or attenuated by different factors depending on the applied control voltage such that if equal input signal voltages are applied to said first and second voltage-to-current converters the r.m.s. sum of the output signal voltages is maintained substantially constant irrespective of the applied control voltage.

4,063,033

SIGNAL QUALITY EVALUATOR

Donald Duane Harbert, Prosperity, and George Roy Kamerer, McMurray, both of Pa., assignors to RCA Corporation, New York, N.Y.

Filed Dec. 30, 1975, Ser. No. 645,397

Int. Cl.² H04B *1/10*

U.S. Cl. 179—1 P **5 Claims**

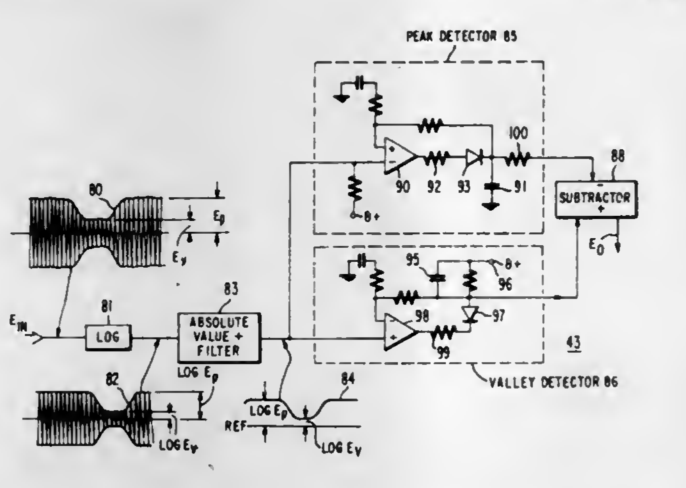

1. A speech signal quality evaluator comprising:

a logarithmic amplifier responsive to said speech signal including noise level signals occurring during pauses between speech signals for providing a signal proportional to the logarithm of said speech signals and said noise signals,

an envelope detector responsive to said signal proportional to the logarithm of said speech signals and said noise signals for providing a detected signal proportional to the envelope of the logarithm of said speech signals and noise signals,

a peak detector responsive to said detected signal over a first time period including normal speech for providing a signal proportional to the peaks of said detected signal,

a valley detector responsive to said detected signal over a second time period including said speech pauses for providing a signal proportional to the intersyllable noise floor, and

subtractor means responsive to the amplitude level of said peak detected signal and to the amplitude level of said valley detected signal for providing a signal quality signal equal to the arithmetic difference between the amplitude levels of said peak detected signal and said valley detected signal.

5. A system for selecting a speech signal from a plurality of speech signals of like information content where said speech signals include normal speech and pauses between said speech comprising:

a separate signal quality detector responsive to each of said speech signals over a time period including normal speech and pauses between speech for providing a level signal equal to the logarithm of the ratio of the peak of the speech signal to the valley of the speech signal, a separate selection gate responsive to each of said speech signals with the outputs of said gates connected in common to a utilization circuit, and means connected to each of said quality detectors responsive to said level signals for providing a control signal to that one of said selection gates corresponding to the quality detector responsive to the highest of said peak to valley ratio signal to cause that selection gate to couple the speech signal to which it is responsive to said utilization circuit.

4,063,034

AUDIO SYSTEM WITH ENHANCED SPATIAL EFFECT

Richard W. Peters, Algonquin, Ill., assignor to Industrial Research Products, Inc., Elk Grove Village, Ill.

Filed May 10, 1976, Ser. No. 684,640

Int. Cl.² H04R *3/00*

U.S. Cl. 179—1 J **18 Claims**

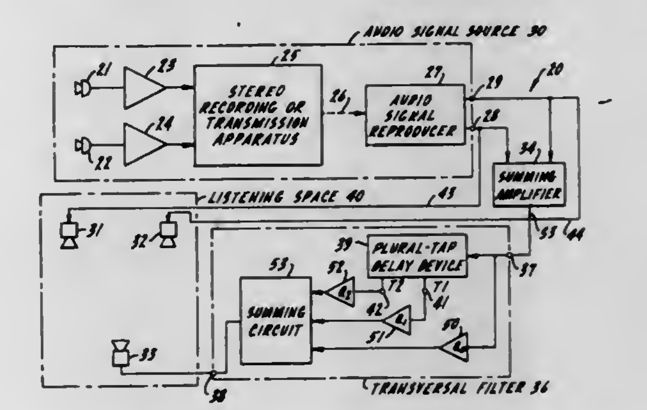

17. A non-recursive audio transversal filter for generating a spatial effect audio signal from a primary audio signal compressing:

delay means for developing a series of at least two delayed audio signals each corresponding to the primary audio signal but each delayed by a successively longer delay interval, in which the delay spacing between successive signals in the series of delayed audio signals is uniform, and the delay spacing between successive signals in the series does not exceed about 100 milliseconds;

and summing circuit means for additively combining the primary audio signal and the delayed audio signals in predetermined amplitude ratio and predetermined phase relationship to develop a spatial effect audio signal having a relatively flat amplitude-frequency characteristic over a broad band of frequencies and a delay-frequency characteristic with relatively uniform delay distribution and small frequency spacing over that range of frequencies.

4,063,035
DEVICE FOR VISUALLY DISPLAYING THE AUDITORY CONTENT OF THE HUMAN VOICE
Dudley Ralph Appelman; David Allen Link, and Gerald Louret Stout, all of Bloomington, Ind., assignors to Indiana University Foundation, Bloomington, Ind.
Filed Nov. 12, 1976, Ser. No. 741,464
Int. Cl.² G10L *1/12*
U.S. Cl. 179—1 SP 17 Claims

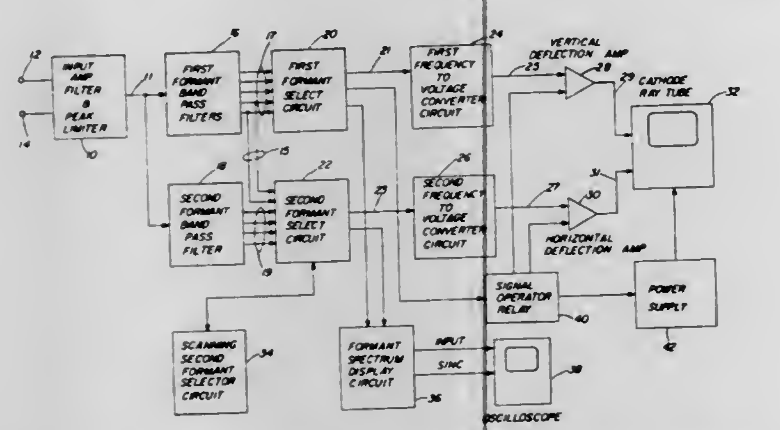

1. A device for visually displaying the auditory content of the human voice comprising:
input means for receiving human voice utterances and for converting the auditory content of the voice utterances to an electronic audio signal having a frequency spectrum;
a first set of filter means covering a first formant frequency range of the frequency spectrum of the voice utterances for separating the electronic audio signal into a first set of individual frequency signals;
a second set of filter means covering a second formant frequency range of the frequency spectrum of the voice utterances for separating the electronic audio signal into a second set of individual frequency signals;
first comparator means for comparing the first set of individual frequency signals and selecting and transmitting the individual frequency signal of the first set having the greatest magnitude;
second comparator means for comparing the second set of individual frequency signals and selecting and transmitting the individual frequency signal of the second set having the greatest magnitude;
first converter means for converting the selected individual frequency signal from the first comparator means to a first voltage representative of the frequency of the selected frequency signal of the first set;
second converter means for converting the selected individual frequency signal from the second comparator means to a second voltage representative of the frequency of the selected frequency signal of the second set;
a display means including a cathode ray tube having a vertical input and a horizontal input, said first voltage from said first converter means being applied to said vertical input, and said second voltage from said second converter means being applied to said horizontal input so that a luminescent dot appears on the face of said cathode ray tube at a vertical and horizontal position corresponding to the values of said first and said second voltages.

4,063,036
COIN TELEPHONE SYSTEM HAVING RESTRICTED COIN-FREE DIALING CAPABILITY
William Robert Hunsicker, 1721 Fredericksburg Pla., P.O. Box 2564, Lakeland, Fla. 33803
Filed Dec. 8, 1975, Ser. No. 638,835
Int. Cl.² H04M *17/02*
U.S. Cl. 179—6.3 R 29 Claims

1. In a telephone system including a pay station having a receiver and a transmitter coupled to a central office by a pair of line conductors through a hook switch and dialing means associated therewith, said paystation operable for initiating calls only upon the insertion therein of a coin or the like, said system including coin-free operating means for rendering said pay station operable for initiating calls without the insertion of said coin, said coin-free operating means comprising:
first means for detecting an offhook condition of said hook switch;
second means having at least two operating conditions, including a first condition for suppressing calls from said pay station and a reset condition for allowing calls to be transmitted from said pay station to said central office along said line conductors;

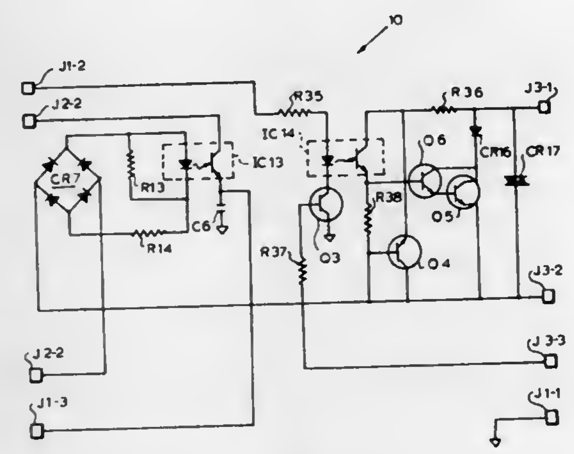

third means for receiving inputs responsive to operation of said dialing means for preventing further dialing from said pay station to said central office after a preselected number of digits have been dialed; and
fourth means coupled to said second means and responsive to detection of said offhook condition by said first means for resetting said second means to thereafter allow dialing of said preselected number of digits only after a predetermined time delay.

4,063,037
TELEPHONE METERING INTERFACE WITH REVERSE SIGNAL SENSOR
Stuart D. Heffernan, Fairport, and Donald G. Maring, Rochester, both of N.Y., assignors to Rochester Telephone Corporation, Rochester, N.Y.
Filed June 14, 1976, Ser. No. 696,061
Int. Cl.² H04M *15/28*
U.S. Cl. 179—7.1 R 14 Claims

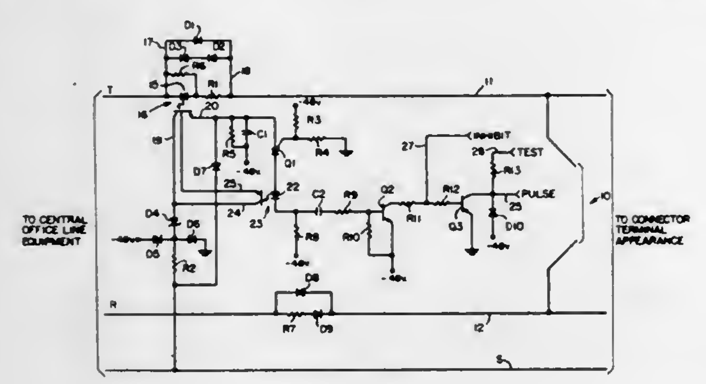

1. In combination with a telephone having tip and ring lines the polarities of which are reversed upon each successful placement of an outgoing call, message metering interface apparatus, comprising
means connected in circuit with said lines for detecting when an outgoing call from the telephone has been successfully completed,
said detecting means including means generating a first signal when the current flow in one of said lines flows in a predetermined direction,
second signal generating means including signal sensing means optically coupled to said first signal generating means and operative upon sensing said first signal to generate a second signal, and
means responsive to the generation of said second signal to generate a third signal for actuating a message metering device associated with the telephone.

4,063,038
ERROR CODING COMMUNICATION TERMINAL INTERFACE
Pradman Kaul, Gaithersburg, and Ova Gene Gabbard, Germantown, both of Md., assignors to Digital Communications Corporation, Gaithersburg, Md.
Filed Nov. 24, 1975, Ser. No. 634,387
Int. Cl.² H04J *3/02*
U.S. Cl. 179—15 BA 12 Claims

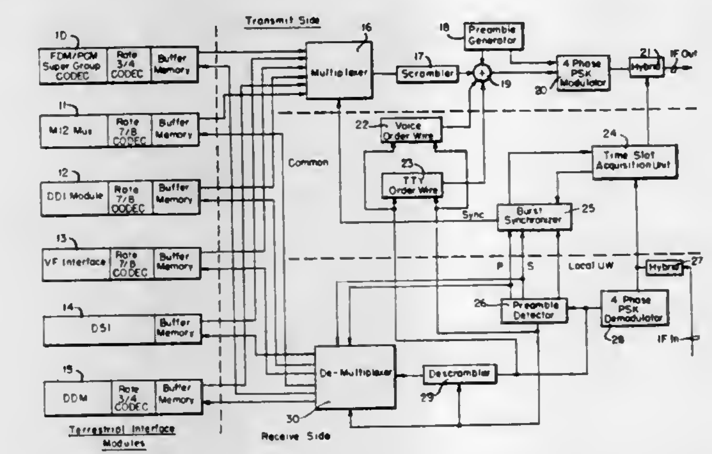

1. Apparatus for interfacing a plurality of terrestrial communication links to a TDMA communication system including a remote transponder, comprising:
a plurality of interface modules, each including a compression/expansion memory means for increasing the nominal clock rate of data flowing from one of said terrestrial links toward the transponder and for decreasing the nominal clock rate of data flowing from the transponder toward one of said terrestrial links, each of said memory means thus establishing low speed data on one side adjacent one of said terrestrial links and a higher speed data on the side opposite to said one side,
selected ones of said modules further including forward acting error correcting coding/decoding means connected to said memory means on the terrestrial side thereof,
said compression/expansion memory means including a separate compression memory and a separate expansion memory.
said compression memory including a pair of memories each of which includes a pair of memory banks,
said expansion memory including a pair of memories, each of said memories including a pair of memory banks,
address control means for each of said compression memory banks to control writing data into said compression memory banks in sequential order and to control reading from said compression memory banks in interleaved fashion.

4,063,039
STEREO NOISE REDUCTION CIRCUIT
Thomas E. Endres, and Donald W. Rodeman, both of Kokomo, Ind., assignors to General Motors Corporation, Detroit, Mich.
Filed June 16, 1976, Ser. No. 696,815
Int. Cl.² H04H *5/00*
U.S. Cl. 179—15 BT 2 Claims

1. An FM radio frequency receiver comprising:
means effective to provide left and right stereophonically related audio signals at left and right audio output terminals, said last-mentioned means including a radio frequency amplifier stage and a gain control circuit effective to generate a gain control voltage for controlling the gain of the radio frequency amplifier stage, the magnitude of the gain control voltage being indicative of the strength of a received carrier signal;
a time delay circuit responsive to the gain control voltage effective to supply a variable control signal, the time delay circuit having a first short time delay with a change in the gain control voltage associated with a decreasing strength of the received carrier signal and having a second time delay greater than the first time delay with a change in the gain control voltage associated with an increasing strength of the received carrier signal;
means responsive to the control signal effective to vary the separation between the left and right audio output terminals in accordance with the magnitude of the control signal when the control signal attains a predetermined magnitude resulting from a decreasing strength of the received carrier signal to provide cancellation of the

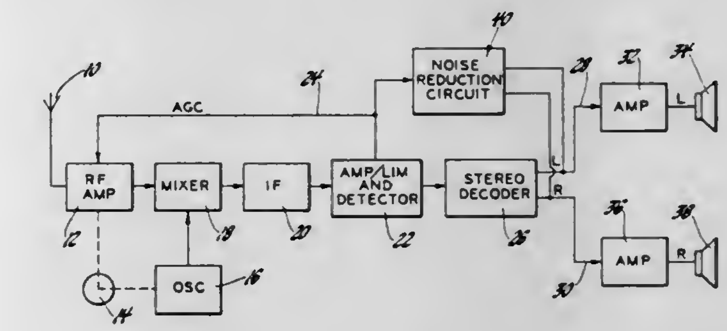

out-of-phase noise on the left and right audio output terminals at low signal strength levels of the received carrier signal, the last-mentioned means including first and second diodes each coupled between the time delay circuit and a respective one of the left and right audio output terminals and being forward biased by the control signal when the control signal attains the predetermined magnitude, the separation between the left and right audio output terminals being decreased rapidly in response to decreasing strengths of the received carrier signal to provide immediate out-of-phase noise cancellation and increased slowly in response to increasing strengths of the received carrier signal to prevent rapid oscillation of separation between the left and right audio output terminals in response to rapid variations in the strength of the received carrier signal.

4,063,040
HIGH SPEED MULTIPLEXER AND DEMULTIPLEXER FOR PULSE CODE CHANNELS
Sylvain Fontanes, and Daniel Forster, both of Chatou, France, assignors to Compagnie Europeenne de Teletransmission (C.E.T.T.), Chatou, France
Filed Nov. 22, 1976, Ser. No. 744,048
Claims priority, application France, Nov. 25, 1975, 75.36004
Int. Cl.² H04J *3/04*
U.S. Cl. 179—15 A 8 Claims

1. A multiplexer for receiving $3n$ coded binary channels forming n groups of three channels, n being a positive integer, and delivering successive corresponding time multiplex frames, said multiplexer comprising: means for, before the forming of each frame, inserting the bits of a locking word among the bits of each group of channels; n transcoding means for simultaneously transcoding said n groups of channels respectively, each transcoding means being designed for delivering successive ternary three-channel frames in which successive pairs of ternary moments translate three binary bits respectively belonging to the three channels of the group transcoded

by this transcoding means; and time multiplexing means for sequentially transmitting the values of each ternary moment

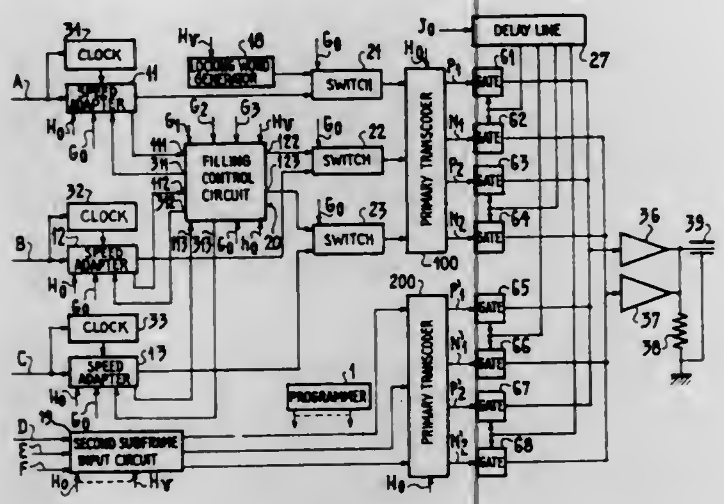

delivered by said n transcoding arrangements, the moments originating from a given three channel frame being equidistant.

4,063,041
METHOD OF TRANSMITTING DIGITAL DATA OF A PCM/TDM TELECOMMUNICATION NETWORK
Friedemann Vollnhals, Wolfratshausen, Germany, assignor to Siemens Aktiengesellschaft, Munich, Germany
Filed Mar. 17, 1976, Ser. No. 667,876
Claims priority, application Germany, Mar. 17, 1975, 2511619
Int. Cl.² H04J *3/00*
U.S. Cl. 179—15 BV **1 Claim**

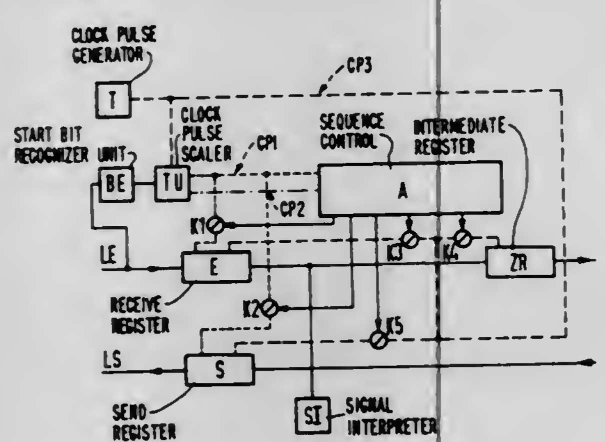

1. A method for transmitting digital data between a digitally operating subscriber station and the subscriber concentrator of a PCM/TDM telecommunication network via a two-wire trunk line at a lesser signalling bit rate than on the TDM highways of the network, wherein the improvement comprises alternately transmitting in both directions of transmission information blocks with at least two PCM words which correspond to successive information samplings of the digital data.

4,063,042
CIRCUIT ARRANGEMENT FOR DECODING A FREQUENCY MODULATED STEREO RADIO SIGNAL
Dietmar Mallon, Zorneding, Germany, assignor to Siemens Aktiengesellschaft, Berlin & Munich, Germany
Filed Feb. 20, 1976, Ser. No. 659,945
Claims priority, application Germany, Mar. 13, 1975, 2511098
Int. Cl.² H04H *5/00*
U.S. Cl. 179—15 BT **2 Claims**

1. A correcting amplifier for connection between a FM demodulator and a stereo decoder and matrix, in which matrix two reproduction signals are formed by sum and difference formation from a sum signal component of the output signal of the FM demodulator and a difference signal component converted from an auxiliary carrier frequency state to the audio frequency state by a synchronous demodulator connected to said stereo decoder, said correcting amplifier comprising:

a high gain operational amplifier having an inverting input, a noninverting input and an output; and

a RC feedback circuit connecting said output and said inverting input to provide a linear frequency response for the sum signal component and the difference signal component,

said operational amplifier comprising

a differential amplifier including first and second transistors each having a base, an emitter and a collector, said emitters connected together, said base of said first transistor connected to receive the output signal of the FM demodulator,

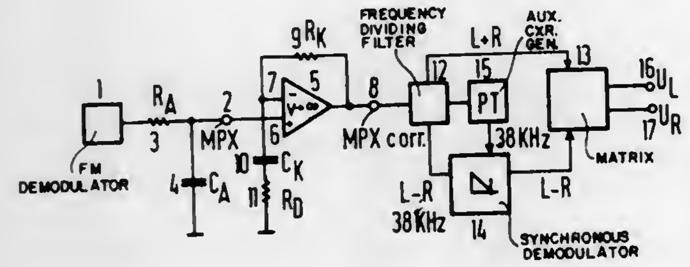

a current reflector connecting said collectors of said first and second transistors to a reference potential,

a constant current source connecting said emitters to a supply potential,

a first resistor,

a second resistor,

a capacitor, and

an amplifier transistor including a base connected to said collector of said first transistor, an emitter connected to the reference potential, and a collector connected to the supply potential via said first resistor and to said base of said second transistor via said second resistor and to the reference potential via said capacitor, and said collector providing the corrected signal output for connection to the stereo decoder.

4,063,043
INTRAOFFICE ALTERNATE CONNECTION ARRANGEMENT
Joji Tashiro, Kawasaki; Tadahiko Kawanabe, Nagareyama; Noboru Araki, Tokyo; Kazuo Ashihara, Kodaira; Toshio Ando, Machida; Sadayuki Hiragi; Kazuo Itoh, both of Yokohama; Yukio Ozawa, Hiratsuka; Eiichi Odera, Kunitachi, and Kosuke Inoue, Kawasaki, all of Japan, assignors to Nippon Telegraph and Telephone Public Corporation; Oki Electric Industry Co., Ltd.; Nippon Electric Company, Limited; Hitachi, Ltd. and Fujitsu Limited, all of, Japan
Continuation of Ser. No. 431,370, Jan. 7, 1974, abandoned, which is a continuation of Ser. No. 327,231, Jan. 26, 1973, abandoned, which is a continuation of Ser. No. 194,074, Oct. 29, 1971, abandoned, which is a continuation of Ser. No. 627,930, April 3, 1967, abandoned. This application June 6, 1975, Ser. No. 584,502
Claims priority, application Japan, Apr. 14, 1966, 41-23180
Int. Cl.² H04Q *3/495*
U.S. Cl. 179—18 EA **3 Claims**

1. An intraoffice connection system in a common controlled automatic switching system, comprising:

a plurality of subscriber equipment;

a plurality of line link frames for accommodating said subscriber equipment at each line terminal of said line link frames;

a plurality of intraoffice trunk equipment;

a plurality of trunk link frames for accommodating said intraoffice trunk equipment, each of said line link frames being connected with each of said trunk link frames through linking means; and

common control equipment including means for controlling connection between a called-subscriber and first idle intraoffice trunk equipment through a first connecting path including a first selected one of said line link frames and a first selected one of said trunk link frames, means for controlling release of said first connecting path together with said idle intraoffice trunk equipment when a second connecting path including a second selected other one of said line link frames and a second selected other one of said trunk link frames for establishing the connection between a calling subscriber and said intraoffice trunk equipment cannot be completed therethrough after connection with said first connecting path, means for control-

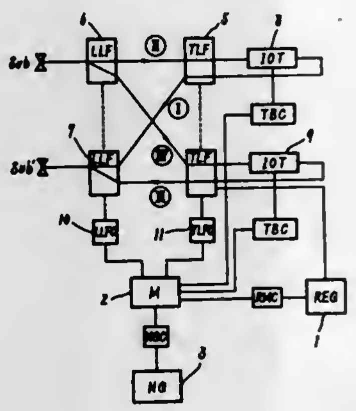

ling connection between said called subscriber and second idle intraoffice trunk equipment through a third trunk link frame other than said first selected trunk link frame in a third connecting path;

means for controlling connection of said second intraoffice trunk equipment with the calling subscriber through a fourth selected one line link frame and a fourth trunk link frame in a fourth connecting path after the completion of connecting said third connecting path; and

said third and fourth line link frames being independent of said first and second line link frames and said third and fourth trunk link frames being independent of said first and second trunk link frames.

4,063,044
LIGHT RESPONSIVE MONITORING SYSTEM
Edward R. Stephan, Manassas, Va., assignor to The United States of America as represented by the Secretary of the Treasury, Washington, D.C.
Filed Jan. 20, 1976, Ser. No. 650,650
Int. Cl.² H04M *1/22*
U.S. Cl. 179—81 C **2 Claims**

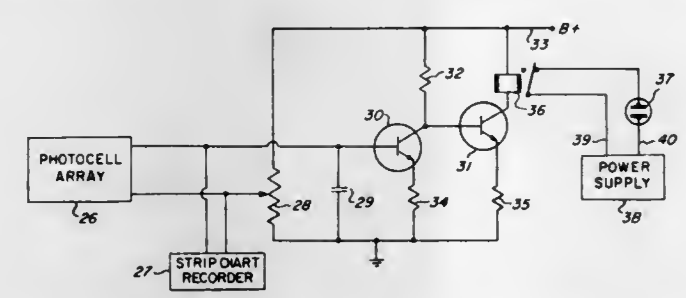

1. A light responsive monitoring system comprising:

a. a mounting bracket placed over an array of illuminable line selector pushbuttons of a key telephone set having holes adapted to receive the pushbuttons;

b. spring loaded pistons fitted into the holes in the mounting bracket and capable of vertical movement;

c. removable inner shims slideably mounted into the holes in the mounting bracket between the piston and the pushbuttons;

d. photocells held within the shims and aligned normal to the pushbuttons;

e. recording means electrically coupled to the output of the photocells for recording the number of key telephone set lines in use as a function of time; and,

f. alarm triggering means electrically connected to the output of the photocells responsive to a preset threshold voltage level for indicating when all lines on the key telephone set are in use; said triggering means comprising means for adjusting the threshold voltage level to compensate for ambient lighting conditions.

4,063,045
TELECOMMUNICATION LINE SWITCHING CIRCUIT
Richard H. Greischar, Chicago, Ill., assignor to Extel Corporation, Northbrook, Ill.
Filed July 27, 1976, Ser. No. 709,234
Int. Cl.² H04M *3/02;* **H04L** *25/02*
U.S. Cl. 179—84 R **5 Claims**

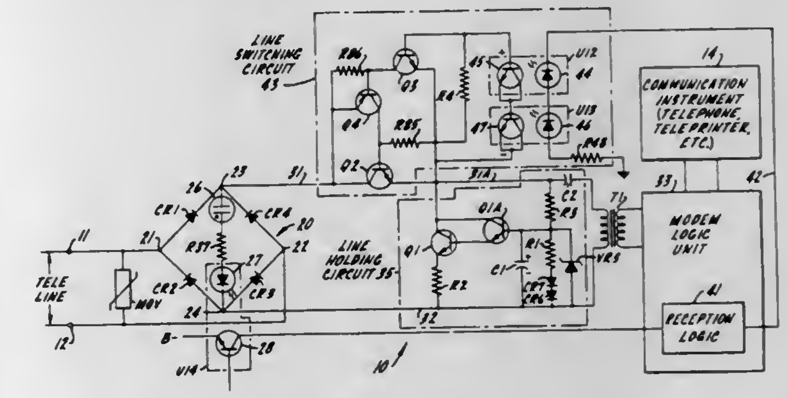

1. In a telecommunication station modem for a telephone, teleprinter, or like communication instrument, of the kind including a line holdng circuit for coupling a transmission line to the instrument, a line switching circuit interposed between the instrument and the transmission line, and a reception logic circuit for generating a switch actuation signal in response to a ring signal received on the transmission line and maintaining that switch actuation signal until completion of a communication, the improvement comprising an isolated line switchin circuit having high off resistance and including:

a light-emitting device connected to the reception logic circuit for energization by the switch actuation signal;

a light-actuated optical receiver which generates an electrical signal when illuminated by the light-emitting device;

a solid-state switching device having a main discharge path, including first and second main electrodes, connected in series between the communication instrument and the transmission line, and having a control electrode and one main electrode connected to the optical receiver so that the main discharge path of the switching device is actuated from a normal non-conductive state to an actuated conductive state in response to a signal from the optical receiver, with no additional external energization;

and a leakage current circuit connected between the control electrode and one main electrode of the switching device to drain leakage current for the other main electrode.

4,063,046
TELEPHONE MOUNTED CALCULATOR
Jerome D. Schiffman, Wilmette, and Bernard L. Kleinke, Des Plaines, both of Ill., assignors to Jerome D. Schiffman and Milton Shiaes, both of Chicago, Ill.
Continuation-in-part of Ser. No. 508,768, Sept. 24, 1974, Pat. No. 4,002,855. This application Jan. 12, 1976, Ser. No. 648,124
Int. Cl.² H04M *1/21*
U.S. Cl. 179—90 K **10 Claims**

1. A calculator adapted to be used with a push button telephone having an array of telephone push buttons, said calculator comprising:

a cup-shaped housing having an opened mouth adapted to fit over the array of push buttons of the telephone and to be secured in place thereover, said housing having a plate,

said plate including an array of apertures extending therethrough, said plate having inner and outer faces;
a first array of finger discs corresponding to at least some of the telephone push buttons for actuating them and bearing indicia on the front faces of said discs, said discs normally at least partially extending outwardly from the outer face of said plate, said discs having rear faces on the opposite side of said front faces;
a series of elongated legs fixedly connected to said rear faces and slidably extending through said apertures to the telephone push buttons for actuating them selectively when depressed and alternatively maintaining said discs normally at least partially extending outwardly from the outer face of said plate, at least one of said legs having an axially-extending front portion disposed in axial alignment with its aperture in said plate and having a laterally ex-

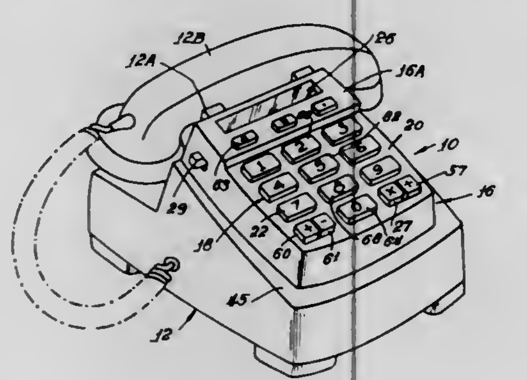

tending intermediate portion connected at its forward end to said front portion and terminating in a foot portion adapted to engage one of the telephone push buttons;
logic circuit means mounted within said housing for performing mathematical calculations;
display means mounted on said housing and responsive to said logic circuit means for indicating information concerning said calculations;
first switching means mounted on said housing and responsive to said finger discs for causing the generation of input information for said logic circuit means;
a second array of finger discs bearing calculating indicia on the front faces thereof; and
second switching means mounted on said housing and responsive to said second array of finger discs for causing additional input information to be generated for said logic circuit means.

4,063,047

KEY TELEPHONE SYSTEM MULTILINK HANDS FREE ANSWER CIRCUIT

William Andrew Huryn, Bricktown, N.J., assignor to Bell Telephone Laboratories, Incorporated, Murray Hill, N.J.

Filed Mar. 4, 1977, Ser. No. 774,489

Int. Cl.[2] H04M *1/00*

U.S. Cl. 179—99 11 Claims

1. A hands free answer control circuit for use in a key telephone system having a plurality of stations and a multilink intercom such that calling stations can communicate with selected called stations over the intercom link between them, said hands free answer control circuit adapted for association with each telephone station having hands free answer capability, each said hands free control circuit arranged for multilink operation and arranged to be enabled when the associated station is selected by a selector circuit common to all of the intercom links, each said hands free answer control circuit comprising
means for detecting lamp flash signals transmitted via said selector circuit to all of the stations connected with the intercom link currently engaged by said selector circuit,
means for detecting ringing signals transmitted via said selector circuit to said associated station,
means jointly responsive to the detection of said ringing signals and the detection of said lamp flash signals at a called hands free answer station for enabling said associated hands free answer control circuit thereby providing hands free communication capability between said called station and a calling station over said engaged intercom link, and

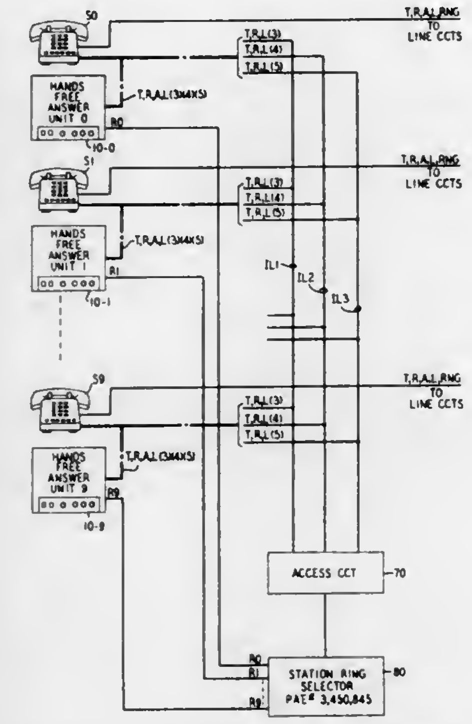

means responsive to said enabling means for releasing said selector circuit so that said selector circuit is available to establish intercom connections on any intercom link other than said engaged intercom link.

4,063,048

IMPLANTABLE ELECTRONIC HEARING AID

Adam M. Kissiah, Jr., 155 E. Brandy Lane, Merritt Island, Fla. 32952

Filed Mar. 16, 1977, Ser. No. 778,193

Int. Cl.[2] H04R *25/00*

U.S. Cl. 179—107 R 6 Claims

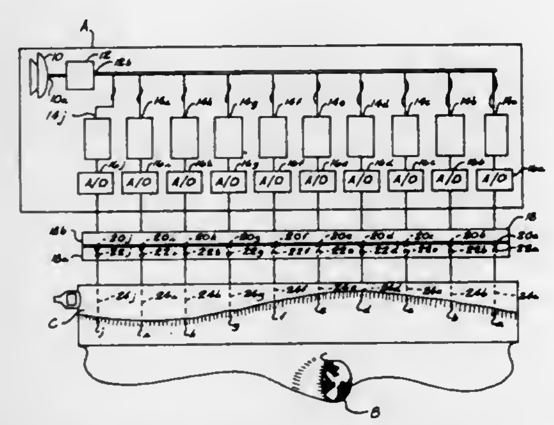

1. An electronic hearing aid device for use in aiding a person having a non-functioning inner ear mechanism comprising:
receiver means for receiving an external audio signal and converting said signal into an analog voltage signal;
amplifier means connected to said receiver means for receiving said analog voltage signal and amplifying said voltage signal;
a plurality of frequency filter networks each having an input connected to an output of said amplifier means for receiving said amplified voltage signal and filtering said analog signal into a number of separate frequency component signals corresponding to a predetermined frequency range of each respective filter network;
analog-digital converter circuit means connected to the output of each filter network for receiving each said frequency component signal and converting said signal into a digital component signal; and

a plurality of elongated electrode members each having one end connected to an output of one of said converter circuit means with the remote end thereof adapted for being implanted adjacent a portion of the auditory nerve system of the inner ear for transmitting said digital component signals for interpretation in the hearing portion of the brain.

4,063,049

PIEZOELECTRIC ELECTROACOUSTIC TRANSDUCER

Roberto Pipitone, and Colombo Gnocchi, both of Milan, Italy, assignors to Societa Italiana Telecomunicazioni Siemens S.p.A., Milan, Italy

Filed Dec. 29, 1976, Ser. No. 755,208

Claims priority, application Italy, Dec. 30, 1975, 30842/75

Int. Cl.[2] H04R *17/00*

U.S. Cl. 179—110 A 10 Claims

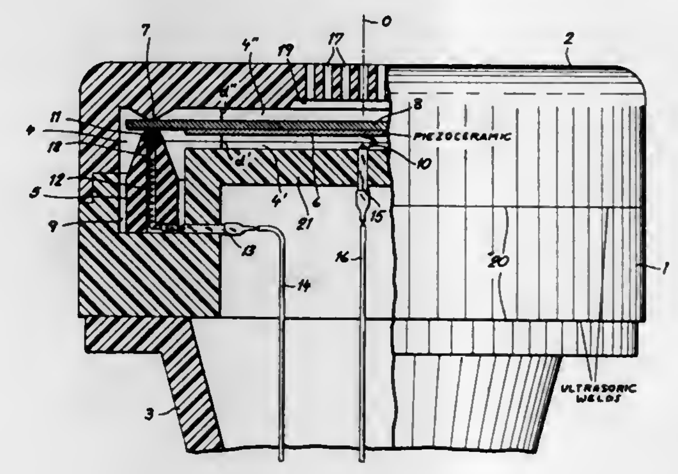

1. An electroacoustic transducer comprising a dielectric body centered on an axis and provided with a central plateau surrounded by an annular recess, an apertured dielectric cover overlying said body and forming a flat sound chamber therebetween, an elastic ring in said recess rising above said plateau, said cover being formed within said sound chamber with an annular rib registering with said ring, a piezoelectric membrane in said sound chamber having a rim clamped between said ring and said rib, and conductor means in said body for connecting said membrane in an electric circuit.

4,063,050

ACOUSTIC TRANSDUCER WITH IMPROVED ELECTRET ASSEMBLY

Elmer V. Carlson, Prospect Heights, and Mead C. Killion, Elk Grove Village, both of Ill., assignors to Industrial Research Products, Inc., Elk Grove Village, Ill.

Filed Dec. 30, 1976, Ser. No. 755,468

Int. Cl.[2] H04R *19/00, 19/04*

U.S. Cl. 179—111 E 10 Claims

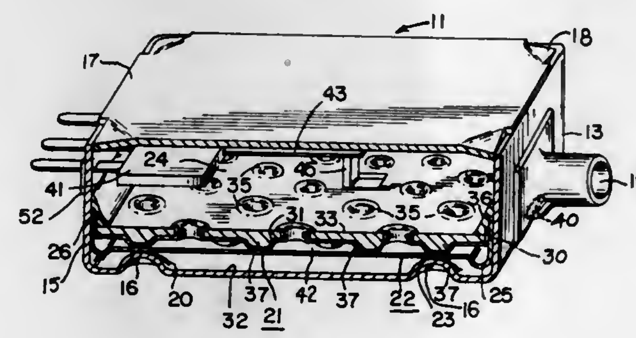

1. An acoustical transducer, comprising, in combination, a case having a bottom and side walls; an electret assembly including a diaphragm having a central vibratable plate-like portion and a relatively flexible surround on the periphery of the plate-like portion, a backplate having apertures extending therethrough, protrusions on one surface of the backplate, and an electret film formed on the surface of the backplate having the protrusions, the electret film cooperating with the diaphragm to develop a signal; and, spaced support posts on the interior surface of the bottom of the case and selectively aligned with protrusions on the surface of the backplate for supporting the electret assembly in the case and for forming an acoustical chamber between the electret assembly and the interior surface of the bottom of said case.

4,063,051

APPARATUS FOR DETECTING BUMPS IN A WEB

Robert W. Gundlach, Victor, and Frederick W. Hudson, West Henrietta, both of N.Y., assignors to Standard Products Corporation, New Rochelle, N.Y.

Filed May 4, 1976, Ser. No. 683,068

Int. Cl.[2] B65H *25/14*

U.S. Cl. 200—61.13 16 Claims

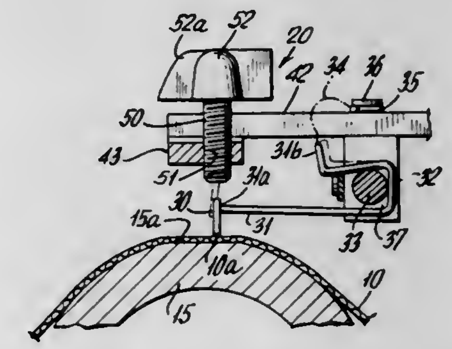

1. Apparatus for detecting bumps in a soft, compressible web adapted to move relative to said apparatus, comprising at least one sensing member having an edge for riding on the web during said relative movement, means for supporting the sensing member with said edge oriented transversely of the direction of said movement, a contact member, means for supporting the contact member a distance above the sensing member greater than the height of the bumps to be detected, said contact member being contacted by said sensing member in response to the displacement of said sensing member by a bump on said moving web, the sensing member being of sufficiently low weight and so mounted that it will bear on the web sufficiently lightly so as not to substantially compress a bump on the web when engaged thereby and so as to bounce off a bump a distance sufficient to contact said contact member.

4,063,052

INERTIA SWITCH HAVING A VARIABLE OPERATING THRESHOLD

Albert Grosseau, Chaville, France, assignor to Societe Anonyme Automobiles Citroen, Paris, France

Filed Dec. 9, 1975, Ser. No. 639,178

Claims priority, application France, Dec. 13, 1974, 74.41211; May 7, 1975, 75.14425

Int. Cl.[2] H01H *35/00; B60T 8/12*

U.S. Cl. 200—61.46 11 Claims

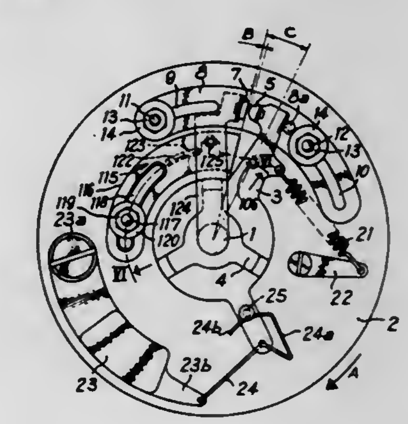

1. An improved inertia switch having a variable operating

threshold for detecting impending locking of a rotary device, such as a vehicle wheel, comprising:

a shaft mounted for rotation by said rotary member;

a flywheel mounted on said shaft for idling rotation relative thereto;

a stop carried by said flywheel;

a flywheel drive member mounted on said shaft for rotation therewith and cooperable with said stop to drive said flywheel in said direction of rotation;

return means coupled between said flywheel and said drive member, the effect of which tends to maintain the said stop in contact with said drive member;

a support member frictionally coupled to said flywheel and capable of being displaced relative thereto;

two pairs of contact means, each pair comprising contact elements, said first pair of contact means being normally open when said drive member engages said stop and including a contact element mounted on said drive member and a contact element mounted on said support member, said contact elements being arranged to be closed upon relative movement of said flywheel and said drive member through a predetermined annular distance, said second pair of contact means being normally open when said drive member engages said stop and including a contact element mounted on said flywheel and a contact element carried by one of said members and shiftable upon movement of said drive member relative to said flywheel through a predetermined annular distance greater than said first mentioned annular distance to effect contact with said contact element of said second pair of contact means mounted on said flywheel.

4,063,053

ADJUSTING AND SEALING MEANS FOR HIGH PRESSURE GAS STORAGE TANK

John J. Abdou, Brandon, Miss., assignor to Allis-Chalmers Corporation, Milwaukee, Wis.

Filed Nov. 24, 1975, Ser. No. 635,159

Int. Cl.² H01H *33/82*

U.S. Cl. 200—148 R **9 Claims**

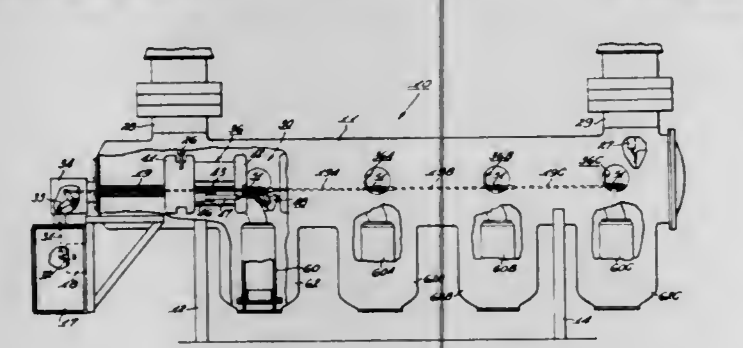

1. In a gas insulated circuit breaker having an interrupter which is provided with a blast of high pressure gas from a blast valve unit;

a storage tank (**60A**) of an insulating material having gas at a relatively high pressure therein;

support means including a base (**101A**) having an axially extending threaded portion threadedly connected to one end of said storage tank in gas tight relationship; and,

adjusting means comprising a lower collar ring (**131**) disposed on said support means in gas tight relationship for radial movement relative to said support means also including an upper collar ring (**139**) in gas sealing relationship with said blast valve unit, said upper collar ring (**139**) also being radially movable relative to said blast valve unit; a bellows (**152**) connected in gas tight relationship to said lower and upper collar rings to form a gas flow passage between said storage tank and said gas blast valve unit, said adjusting means being operable to receive and connect the blast valve unit to said storage tank in any radially adjusted position.

4,063,054

KEY SWITCH

Osamu Hirata, Tokyo, Japan, assignor to Canon Kabushiki Kaisha, Tokyo, Japan

Filed Nov. 14, 1975, Ser. No. 632,105

Claims priority, application Japan, Nov. 22, 1974, 49-134924; Nov. 22, 1974, 49-134925

Int. Cl.² H01H *9/20*

U.S. Cl. 200—159 R **4 Claims**

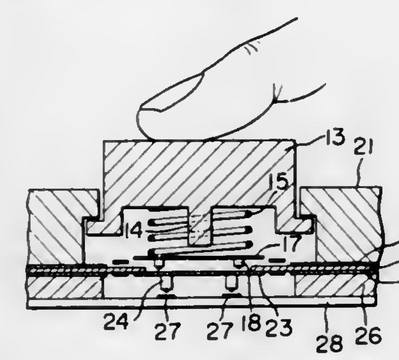

1. A key switch comprising:

a key top movable in response to an external force applied thereto;

a first plate spring for supporting said key top and responding to the movement thereof;

a first switch circuit operable by said first plate spring;

a second plate spring actuated in response to said first plate spring;

a second switch circuit operable by said second plate spring; and

a means operable in response to the movement of said key top to close said second switch circuit and to open said first switch circuit.

4,063,055

SWITCH WITH AN ON-OFF INDICATING MECHANISM

Shigeo Ohashi, 5-14 Minamimagome 1-chome, Ota, Tokyo, Japan

Filed Apr. 13, 1976, Ser. No. 676,434

Claims priority, application Japan, Apr. 16, 1975, 50-50372[U]

Int. Cl.² H01H *9/16*

U.S. Cl. 200—308 **11 Claims**

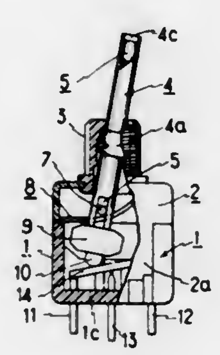

1. In a switch, an open top switch housing, a cover having depending walls seated on said switch housing, and an indicating mechanism comprising:

a laterally tiltable actuating member having a longitudinally extending bore, said actuating member being disposed with its lower end in said housing and its upper end extending through an aperture in said cover;

a movable indicating member slidably received in said bore;

a switching member connected to the lower end of said actuating member and carried by said actuating member to switch movable contact segments into contact with contact segments fixed to said switch housing and extending through the bottom of said switch housing;

a receiving plate disposed above said switch housing and received within the volume defined by said depending walls, said receiving plate having an inclined surface and being located above said switching member, supported on said housing and within said cover;

a spring inserted between said actuating member and said indicating member;

a longitudinal groove formed at the lower portion of said indicating member; and

a vertically movable pin provided adjacent to the lower end of said indicating member, adapted to be pressed against said inclined surface by the action of said spring;

whereby the upper end of said indicating member is made to be selectively visible or concealed by extending out of or being recessed within the upper surface of the actuator in accordance with the operating position of said actuating member.

4,063,056

BI-DIRECTIONAL LIMIT SWITCH

Robert K. Baker, Lemay, Mo., assignor to Potter Electric Signal Co., St. Louis, Mo.

Filed July 19, 1976, Ser. No. 706,749

Int. Cl.² H01H *3/20*

U.S. Cl. 200—332 **8 Claims**

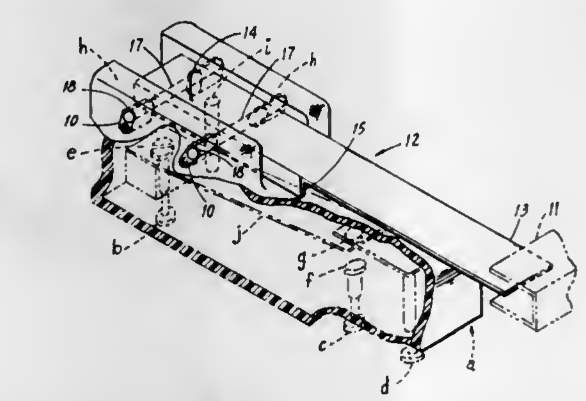

1. In an electrical switch of the type actuated by a spring-loaded plunger extending outwardly along a reciprocating axis to an operating end,

the improvement comprising

two fulcrum means on opposite sides of the plunger, aligned parallel to each other and spaced from and transverse to the said axis of the plunger, and

lever means, including an outstanding actuating arm portion, mounted operably on said fulcrum means and normally held by the spring-loaded plunger in an undeflected position,

said fulcrum means and lever means together having means to actuate the plunger upon linear deflection of the said actuating arm portion in either of two opposite directions.

4,063,057

TEMPERATURE COMPENSATED PRESSURE DIFFERENTIAL SENSING DEVICES, INCLUDING IMPROVED PRESS-TO-TEST AND GLASS HEADER SWITCH MOUNTING

Daniel T. Meisenheimer, Jr., 404 Longmeadow, Orange, Conn. 06477

Continuation-in-part of Ser. No. 353,466, April 23, 1975, Pat. No. 3,922,515. This application Nov. 24, 1975, Ser. No. 634,513

Int. Cl.² H01H *35/34*

U.S. Cl. 200—83 Y **21 Claims**

1. A pressure differential sensing device for detecting loss of gas from a gas pressurized chamber, the device comprising a flexible, gas-filled, sealed capsule mounted within a space pressurized by the gas in the pressurized chamber, the capsule comprising two convoluted diaphragms joined together along their peripheral edges, whereby the gas pressure of the chamber is applied to the outside of the capsule, and means for sensing expansion of the capsule and for providing a signal in response thereto, wherein the initial internal pressurization of the capsule is chosen such that the capsule size remains substantially constant throughout a range of temperature variations causing pressure increases and decreases in both the capsule and the chamber, whereby a loss of gas from the chamber results in a decrease of the gas pressure of the chamber relative to the internal gas pressure of the capsule thereby permitting the capsule to expand, the expansion of the capsule being sensed by the sensing means, and wherein the gas pres-

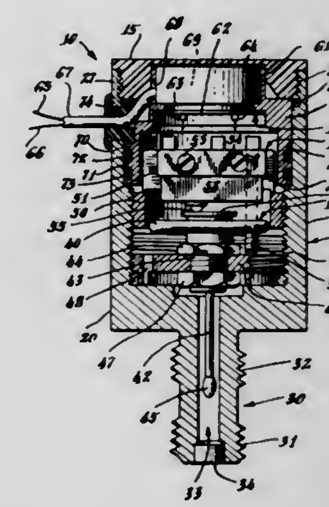

sure of the chamber is higher than the internal gas pressure of the capsule whereby the capsule is normally compressed from its free position and failure of the capsule seal permitting equalization of the internal gas pressure of the capsule with the gas pressure of the chamber allows the capsule to expand to its free position, the expansion of the capsule being sensed by the sensing means.

4,063,058

APPARATUS FOR MAKING SEAM WELDED TUBING

Heinz Gross, Dortmund, Germany, assignor to Hoesch Werke Aktiengesellschaft, Dortmund, Germany

Filed July 12, 1976, Ser. No. 704,640

Claims priority, application Germany, July 23, 1975, 2532901

Int. Cl.² B23K *11/08*

U.S. Cl. 219—62 **9 Claims**

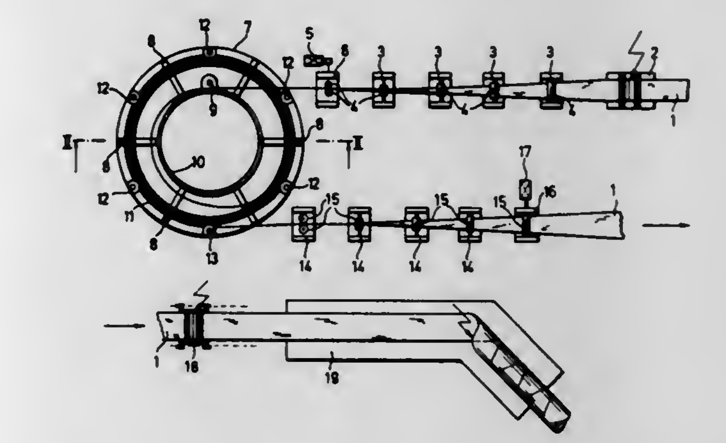

1. In apparatus for manufacturing seam welded tubing from strip, said apparatus being of the type having a first submerged arc butt welding machine for joining together the ends of successive lengths of said strip to form a continuous strip, a strip storing device for storing said continuous strip, a tube forming and welding machine for forming said continuous strip into a tube and welding said tube, and means for feeding said strip through said first butt welding machine, said storing device and then to said forming and welding machine, the improvement comprising a second butt welding machine, and strip turning means between said first butt welding machine and said second butt welding machine, said strip turning means being operative to turn said strip over laterally whereby said second butt welding machine can make butt welds between said ends of said successive lengths of strip on the opposite

faces of said lenghts of strip from the welds made by said first butt welding machine.

4,063,059
PUNCH PRESS WITH CUTTING TORCH
Theodore F. Brolund; Burton A. Rolland, and Merle R. Pauley, all of Rockford, Ill., assignors to W. A. Whitney Corporation, Rockford, Ill.
Filed Oct. 22, 1976, Ser. No. 735,087
Int. Cl.² B23K *9/00*
U.S. Cl. 219—68 **11 Claims**

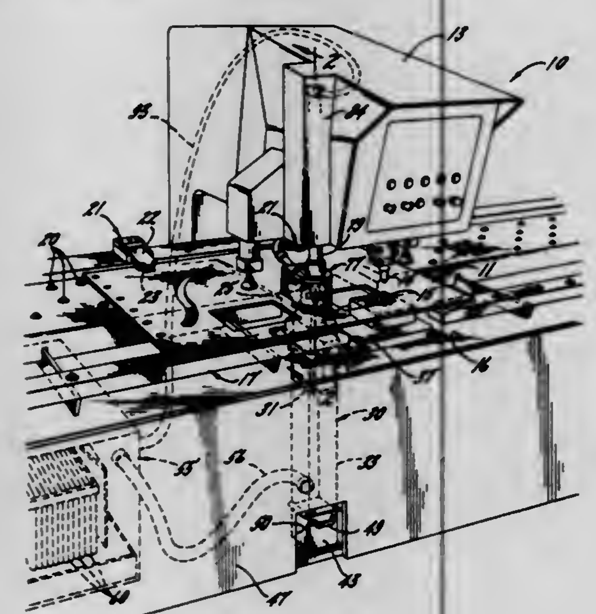

1. Apparatus for cutting a metal workpiece, said apparatus comprising a support, a metal melting tool mounted in a horizontally stationary position on said support and operable to emit downwardly directed energy for melting said workpiece, a horizontal work table located below said tool and supporting said workpiece for movement beneath said tool whereby parts of said workpiece may be melted by said tool, an upright duct extending upwardly through said table, an opening in the upper end of said duct and alined with said tool whereby molten metal is directed downwardly into said duct, at least a portion of said duct being mounted for movement between an active raised position in which the upper end of said duct is disposed closely adjacent the underside of said workpiece and an inactive lowered position in which the upper end of said duct is spaced below the underside of said workpiece.

4,063,060
METHODS OF MAKING TORSIONAL VIBRATION ISOLATING MOTOR MOUNTING SYSTEMS AND ARRANGEMENTS
Ernest W. Litch, III, Fort Wayne, Ind., assignor to General Electric Company, Fort Wayne, Ind.
Filed Dec. 1, 1975, Ser. No. 636,547
Int. Cl.² B23K *11/14*
U.S. Cl. 219—93 **7 Claims**

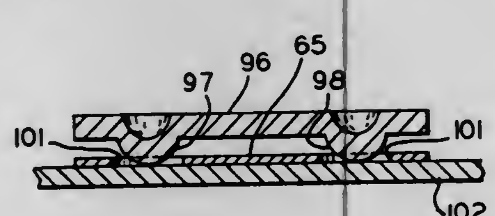

1. A method of manufacturing a torsional mode vibration isolating motor mounting system comprising a stationary motor member oriented along a longitudinally extending axis and a plurality of martensitic steel flexible motor supporting arms particularly adapted for supporting an induction motor, including the motor member, from a plurality of locations along a mounting structure and for establishing a torsional mode resonant frequency for the arrangement of less than $\sqrt{2}$ times the motor power supply frequency, and a tilting mode resonant frequency greater than twice the motor power supply frequency; wherein at least one of said arms has a radially extending portion of generally rectangular cross-section and also has a pre-selected thickness less than the width thereof, and wherein the at least one of said arms further has a motor mounting tab, said method comprising: positioning said at least one of said arms with the radially extending portion thereof oriented so that the thickness thereof is oriented in a direction generally transversely relative to the longitudinally extending axis, so that the width thereof is oriented in a generally parallel direction relative to the longitudinally extending axis, and so that the motor mounting tab thereof is closely adjacent to the stationary motor member, and positioning at least one weldable projection along a projection accommodating portion of the tab and positioning a mass of heat absorbing and tab reinforcing material adjacent to the tab with the tab sandwiched between the stationary motor member and mass of heat absorbing and tab reinforcing material so as to establish, with the motor member, heat sink means; welding the mass of heat absorbing and tab reinforcing material to said stationary motor member by passing welding current through the at least one projection; and dissipating welding heat caused by the welding current through the motor member and mass of heat absorbing and tab reinforcing material whereby excessive heating of the at least one of said arms due to the welding heat is avoided.

4,063,061
BUTT-WELDING DEVICE
Yoshiharu Fujino, Yokohama; Iwane Chiba, Soka; Toshimi Chiyonobu, Fukuyama; Tomihisa Takahata, Fukuyama, and Yasuhiko Kachi, Fukuyama, all of Japan, assignors to Ishikawayima-Harima Jukogyo Kabushiki Kaisha, Tokyo, Japan
Filed Dec. 23, 1975, Ser. No. 643,705
Claims priority, application Japan, May 23, 1975, 50-61716
Int. Cl.² B23K *11/02*
U.S. Cl. 219—101 **9 Claims**

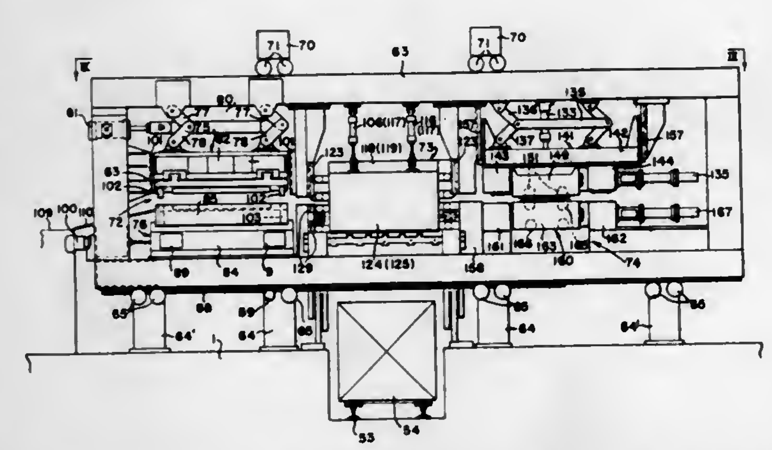

1. A butt welding device for welding the ends of strip material movable along a path of travel, comprising a bed, a feed side frame mounted on the bed for reciprocal movement along the direction of said path of travel, strip clamping means mounted on a discharge side of the frame, a box-shaped frame mounted on said bed and movable transversely of said path of travel, a shear unit mounted on said box-shaped frame for cutting off the ends of the strips to be welded, an electrode unit mounted on the box-like frame to clamp the strips and butt weld them together, said strip clamping means including two pairs of opposed clamping devices for respectively clamping adjacent ends of a pair of strips, said box-shaped frame being movable to bring the shear unit into position to shear the clamped ends of the strips, means for moving the box-shaped frame to another position to move said electrode unit in position to butt weld the ends together, a flash trimmer unit mounted on said box-shaped frame and adapted to remove the flash formed along the joint between the strips, a rapid displacement cylinder mounted on said bed for moving the first named frame toward said electrode unit, and an upset cylinder mounted on said bed for applying upset pressure to the strips during butt welding.

4,063,062
ELECTRON BEAM WELDING TECHNIQUE FOR JOINING TWO WORKPIECES TOGETHER
Gottfried Kuhnen, Oberrohrdorf, Switzerland, assignor to BBC Brown Boveri & Company Limited, Baden, Switzerland
Filed Oct. 21, 1975, Ser. No. 624,471
Claims priority, application Switzerland, Oct. 28, 1974, 14398/74
Int. Cl.² B23K *9/00*
U.S. Cl. 219—121 EM **2 Claims**

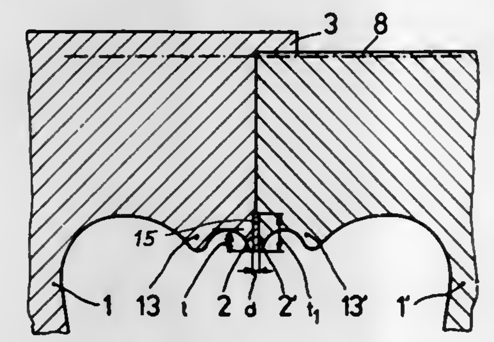

1. In the method of welding together the adjoining end faces of two thick-walled rotationally symmetrical hollow bodies and which after completion of the welding operation establish closed and inaccessible hollow spaces and wherein the welding is effected by means of an electron beam movable along the outer surface of the bodies at the interface formed by the adjoining end faces and which produce a full-penetration type welded joint from the outer to the inner surfaces, the improvement wherein the end faces of the hollow bodies are provided with adjoining annular fusion lips extending radially inward at their inner surfaces, the side of each said fusion lip facing away from the end face to be welded having a substantially quadrant-shaped profile and the width of said lip at the exit point of the electron beam being at least equal to the diameter of the electron beam thereby resulting in formation of an inner bead therebetween.

4,063,063
METHOD OF DESCALING METAL PRODUCTS
Alfred Funck, and Jo Simon, both of Esch, Alzette, Luxembourg, assignors to Acieries Reunies de Burbach-Eich-Dudelange S.A. ARBED, Luxembourg, Luxembourg
Filed Feb. 13, 1976, Ser. No. 658,107
Claims priority, application Luxembourg, Feb. 14, 1975, 71852
Int. Cl.² B23K *26/00*
U.S. Cl. 219—121 LM **6 Claims**

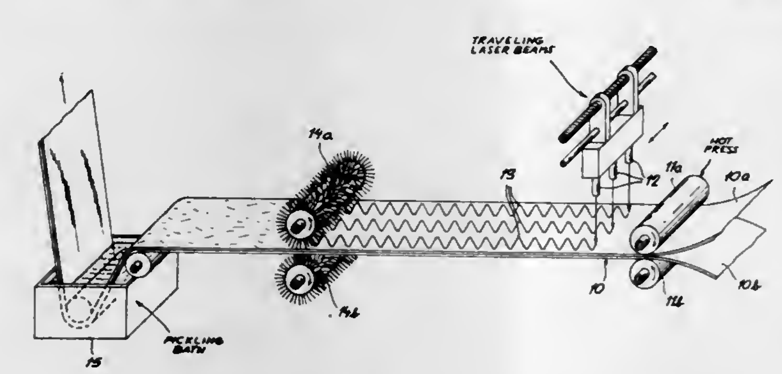

1. A method of descaling metallic workpieces having surfaces coated with an oxide film, comprising the steps of subjecting the oxide film of a workpiece to be descaled to sudden localized heating by continuously displacing at least one laser beam in a multiplicity of closely spaced but discrete passes across the coated surface, thereby detaching the film from the subjacent metallic substrate along the path of the beam sweep and substantially loosening the film between said discrete passes, and thereafter subjecting said coated surface in its entirety to an oxide-removing aftertreatment.

4,063,064
APPARATUS FOR TRACKING MOVING WORKPIECE BY A LASER BEAM
Richard J. Saunders, San Jose, and Wayne Sherman Mefferd, Los Altos Hills, both of Calif., assignors to Coherent Radiation, Palo Alto, Calif.
Division of Ser. No. 660,219, Feb. 23, 1976, which is a continuation of Ser. No. 524,585, Nov. 18, 1974, abandoned. This application Aug. 23, 1976, Ser. No. 716,475
Int. Cl.² B23K *27/00*
U.S. Cl. 219—121 L **7 Claims**

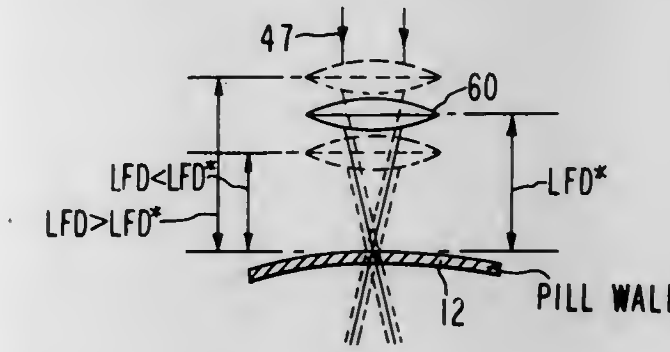

1. A system for drilling holes with a laser beam in a plurality of discrete moving workpieces comprising
- a support which moves said plurality of discrete workpieces sequentially along a predetermined path at a predetermined velocity, and
- apparatus for sequentially tracking along a portion of such path each said workpiece being drilled seriatum by said laser beam, said tracking apparatus comprising
- means for directing said laser beam generally transversely of the direction of movement of said workpiece on said support;
- a mirror for folding said transversely directed laser beam toward said workpiece on said support; and
- means for oscillating said beam folding mirror synchronously with the movement of said workpiece, said mirror being oscillated between a first position directing said laser beam at a preselected point on the surface of said workpiece facing said folding mirror when said workpiece is at a location corresponding to the beginning of said path portion, and a second position directing said laser beam at the same said workpiece point when said workpiece is at a location corresponding to the termination of said path portion, whereby, during the portion of the mirror oscillation from the first position to the second position the laser beam is caused to track the preselected point on each workpiece; and
- a focusing lens positioned between said oscillating beam folding mirror and said workpiece for focusing said laser beam upon said workpiece surface and maintaining that focus throughout the tracking of said workpiece by said laser beam.

4,063,065
METHOD AND APPARATUS FOR THE RESISTANCE HEATING OF WIRE PINS
Toni Wüst, Cologne, Germany, assignor to Meyer, Roth & Pastor Maschinenfabrik GmbH, Cologne, Germany
Filed Dec. 1, 1975, Ser. No. 636,585
Claims priority, application Germany, Dec. 4, 1974, 2457225
Int. Cl.² H05B *1/00*
U.S. Cl. 219—162 **8 Claims**

1. A method for the consecutive resistance heating of se-

quentially advanced wire pins by means of electrodes positioned on end faces of the pins for the manufacture of chain links, comprising the following steps:

a. connecting in series two wire pins to a current source through two electrode pairs; the electrodes of one electrode pair engaging two ends of one wire pin and the electrodes of the other electrode pair engaging two ends of the other wire pin;
b. passing heating current through each wire pin for a preheating period and a consecutive main heating period;

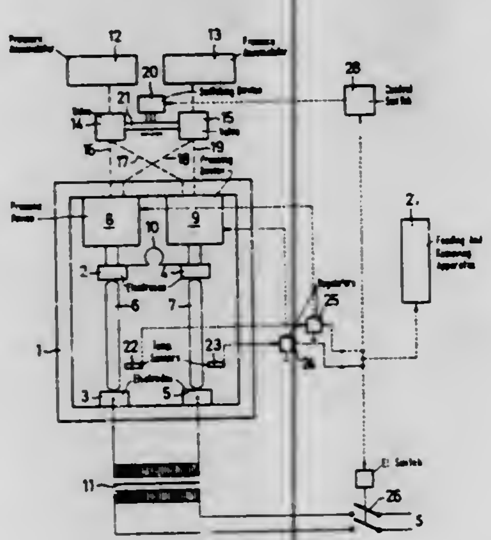

c. applying a relatively large pressing force with which the electrodes of one electrode pair are urged against the ends of the pin exposed to said pre-heating period;
d. concurrently with step (c), applying a relatively small pressing force with which the electrodes of the other electrode pair are urged against the ends of the pin exposed to said main heating period; and
e. between each said heating period removing that wire pin which has been exposed to both heating periods and, in its stead, introducing a new wire pin.

4,063,066
FIXING APPARATUS FOR A COPYING MACHINE
Mitsuru Nagoshi, Hachioji, Japan, assignor to Konishiroku Photo Industry Co., Ltd., Tokyo, Japan
Filed Nov. 30, 1976, Ser. No. 746,090
Claims priority, application Japan, Dec. 4, 1975, 50-164726
Int. Cl.² H05B 1/00
U.S. Cl. 219—216 2 Claims

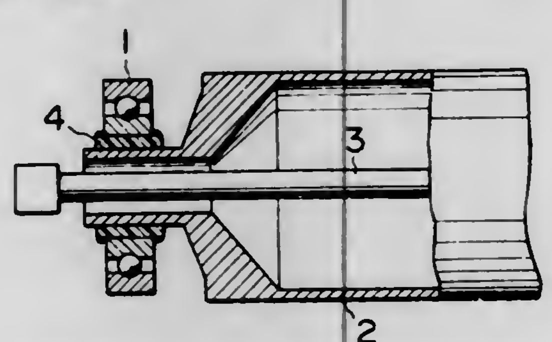

1. In a fixing apparatus for a copying machine including a bearing device, a rotatable hollow fixing roll supported by said bearing device, and a heater contained within said hollow fixing roll, the improvement wherein said bearing device comprises a bearing, an annular resin adiabatic member, and an annular rigid metal member disposed between said bearing and said annular resin adiabatic member, said annular rigid metal member having a flange portion extending radially inwardly from an end of said annular rigid metal member.

4,063,067
FURNACE FOR HEATING A CIRCULATING GAS STREAM ESPECIALLY FOR PRODUCING MOLECULAR JETS
Jacques Bouffenie; Roger Campargue, both of Paris, and Albert Recule, Igny, all of France, assignors to Commissariat a l'Energie Atomique, France
Filed July 8, 1975, Ser. No. 594,033
Int. Cl.² F24H 3/04
U.S. Cl. 219—374 7 Claims

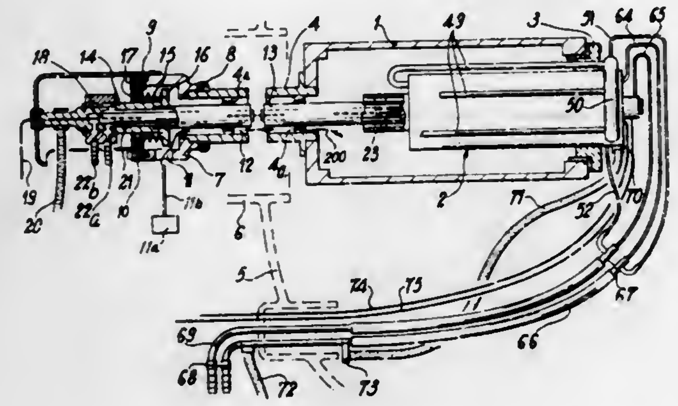

1. A furnace for producing high-temperature, gaseous molecular jets, comprising:
a fluid-tight support casing;
a tubular, resistance-type heating assembly disposed within said casing and having an open end portion positioned adjacent to one end of said casing;
containment means coaxially disposed about said heating assembly and defining an enclosed space about said heating assembly;
means for supplying an electric current to said heating assembly for energizing said heating assembly;
an end cap on said casing adjacent to said open end portion of said heating assembly, and having a nozzle orifice positioned opposite said open end portion of said heating assembly for the discharge of heated gas from said casing;
means for providing a gas stream into the enclosed space defined by said containment means, said gas stream being circulated externally and then internally of said heating assembly, and then being discharged from the open end portion of said heating assembly;
an annular thermal screen disposed coaxially with and surrounding said heating assembly to contain the heat generated by said heating assembly;
means for circulating cooling fluid around said thermal screen and around the extremities of said heating assembly to control the temperatures thereof; and
pumping means operatively connected adjacent to said open end portion of said heating assembly to remove a portion of said heated gas stream prior to its discharge through said nozzle orifice to increase the temperature of the discharged gas stream.

4,063,068
FOOD HEATING AND COOKING RECEPTACLE
David G. Johnson, Maplewood, and Robert D. Thorson, St. Paul, both of Minn., assignors to Minnesota Mining and Manufacturing Company, St. Paul, Minn.
Filed Aug. 12, 1976, Ser. No. 713,907
Int. Cl.² F27D 11/02
U.S. Cl. 219—441 1 Claim

1. A food heating receptacle for heating food comprising:
a. a base member;
b. a metallic dish having a thickness of about 0.09 cm suspended in said base member and sealed at its outer edges with said base member, the bottom edge of the dish being in spaced relation to the bottom of said base member;
c. a heating element secured to the bottom of said dish, the element consisting of a laminate of polymeric material and first and second electrical conductors interwoven in said

laminate to form electrical conductors spaced from each other within said laminate to provide electrical insulation, the laminate forming thermal insulation means to control the rate of heat flow generated by said conductors through said laminate and dish to the interface of the dish and food so that the amount of heat transferred to the food at any point along the interface of the food and dish maintain said food in the range of 91.1° C and 106.6° C;
d. a first thermostat connected to said first conductor and disposed on said dish to energize and de-energize said first

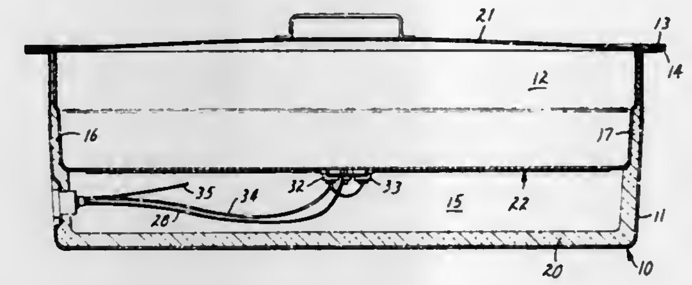

conductor within predetermined temperature levels for heating and cooking food;
e. a second thermostat connected to a second conductor and disposed on said dish to energize and de-energize said second conductor within predetermined temperature levels for maintaining the food at serving temperatures and for de-energizing said conductors in event said temperature levels exceed predetermined temperature levels for the operation of said receptacle; and
f. a thermal cover disposed over said dish and base member.

4,063,069
ELECTRICALLY HEATABLE FLOOR CARPET
Menachem Peeri, 21, Hagefen St., Neve Monoson, Israel
Filed Mar. 3, 1976, Ser. No. 663,368
Int. Cl.² H05B 3/36
U.S. Cl. 219—545 1 Claim

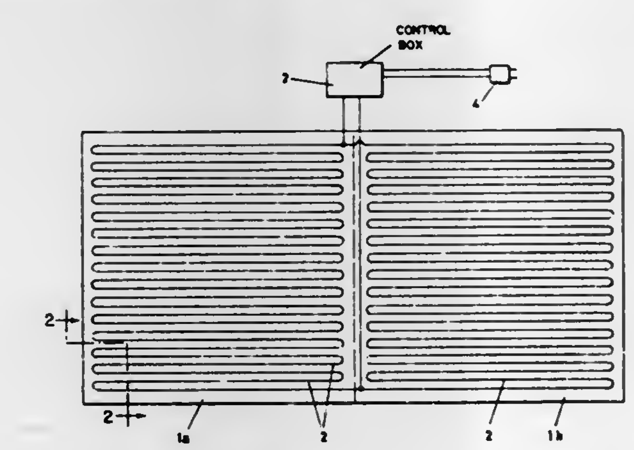

1. An electrically heatable floor covering comprising a carpet of woven electrically non-conducting fibers, wherein the improvement comprises an electrical heating element woven in the carpet as a weft thread in a zig-zag pattern covering the area of the carpet, said heating element being made of a stranded wire having a resistivity per meter of about 0.36 ohm, and being composed of a plurality of copper filaments each of which has a diameter of about 0.1 mm and is covered with a reinforcing coating of polytetrafluoroethylene which causes the wire to withstand impressions produced by footsteps and by heavy furniture without being broken, the total wire length being about 15 m. per square m.

4,063,070
WIDEBAND FREQUENCY MULTIPLIER PARTICULARLY ADAPTED FOR USE IN BADGE READERS AND THE LIKE
Gerard Jean-Marie Delarue, Antibes, and Michel Paul Verhaeghe, Vence, both of France, assignors to International Business Machines Corporation, Armonk, N.Y.
Filed Nov. 12, 1976, Ser. No. 741,254
Claims priority, application France, Apr. 1, 1976, 76.10353
Int. Cl.² G06K 5/00; G11B 5/09
U.S. Cl. 235—474 16 Claims

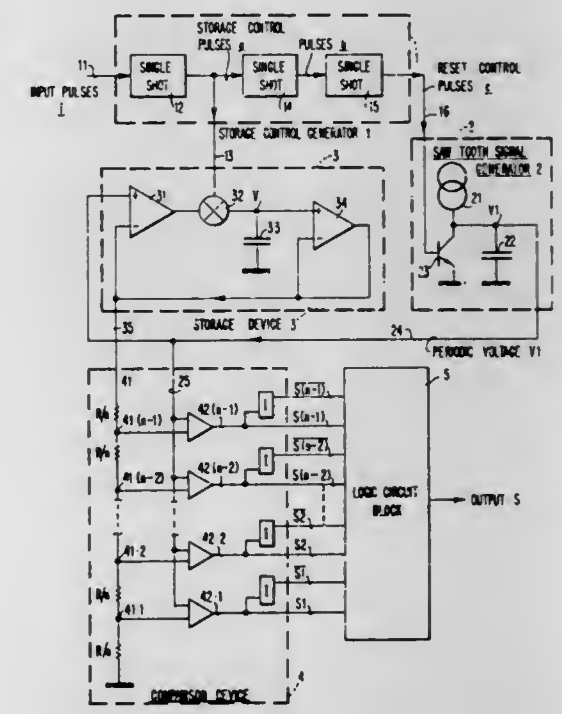

1. A frequency multiplier including in combination the following structural elements:
sawtooth signal generator means producing a sawtooth linear voltage with a frequency equal to the frequency to be multiplied, the magnitude of the sawtooth linear voltage varying between a reference magnitude and a maximum magnitude which is mathematically related to the frequency to be multiplied;
a storage device coupled to said sawtooth signal generator means for a storing voltage having a magnitude equal to said maximum magnitude;
a voltage divider coupled to said sawtooth signal generator means and said storage device, said voltage divider including a plurality of outputs, each of said outputs electrically manifesting a voltage magnitude which is a predetermined fraction of the maximum magnitude stored voltage stored by said storage device;
a number of comparators, each comparator being associated with one of the outputs of the voltage divider and coupled to said sawtooth signal generator means, each comparator comparing the instantaneous magnitude of the sawtooth voltage with the magnitude of the voltage manifested at its associated voltage divider output, each comparator supplying a first level signal when the sawtooth voltage is higher in magnitude than the magnitude of the voltage manifested at its associated divider output and, a second level signal when the sawtooth voltage is lower in magnitude than the magnitude of the voltage manifested at its associated divider output; and
logic circuit means, coupled to said number of comparators, said logical circuit means logically combining the signals from said number of comparators to provide an output signal the basic time-period of which is a given sub-multiple of the time-period of the sawtooth signal.

4,063,071
FLEXITIME RECORDER
Erich Willmann, Zell, and Günter Trischler, Plochingen, both of Germany, assignors to Simplex Time Recorder Co., Gardner, Mass.
Division of Ser. No. 491,068, July 23, 1974, Pat. No. 3,974,362. This application Apr. 12, 1976, Ser. No. 676,397
Int. Cl.² G07C *1/00*
U.S. Cl. 235—92 T **4 Claims**

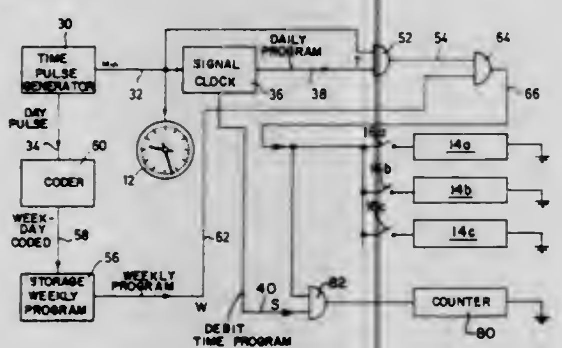

1. A flexitime recorder for informing workers of the respective actual times they have worked during a day's program of work time between a start time and a finish time and including a break time as well as of a set work time within the day's work time between said start time and said finish time less any said break time whereby each worker is apprised of the amount of his overtime or undertime with respect to said set time including in combination, timing pulse generating means for generating timing pulses, a plurality of first pulse actuated time storage counting means for counting said pulses, a plurality of respective switch means associated with said counting means, each of said switch means adapted to be actuated to render its associated counting means active to record the actual time a worker has worked during a day's work program, programming means for producing a first output signal representing said day's program of work time and including a break time represented by an absence of said first signal during said day's program and for producing a second output signal representing a set work time within said day's program, first coupling means responsive to said first output signal for coupling said timing pulses to said switch means as an input thereto, an additional counter, and second coupling means responsive to said second output signal and to the output of said first coupling means for coupling timing pulses to said additional counter to register therein said set work time less any break time falling within said day's program of work time and said set work time.

4,063,072
AUTOMATIC PROCESS FOR THE OPTIMUM REGULATION OF AIRCRAFT FUEL FLOW
Gerhard Sochtig, Weissdornstrasse 13, 4 Dusseldorf, and Heinz Heltfeld, Waldblick 27, 43 Essen, both of Germany
Filed Aug. 5, 1975, Ser. No. 602,008
Claims priority, application Germany, Aug. 7, 1974, 2438030
Int. Cl.² G06F *15/20;* **G05D** *13/00;* **G05B** *13/02*
U.S. Cl. 364—431 **4 Claims**

1. A method for the optimum regulation of the fuel flow of an aircraft, relating to a flight between two airports using a computer with a store and a comparator, comprising the steps of:

1. entering into the computer the flying time costs of the aircraft per unit of time, the fuel price, the first fuel flow, and the first aircraft speed,
2. determining from the fuel price, first fuel flow, and first aircraft speed in the first fuel cost per unit of distance,
3. determining from the flying time cost and the first aircraft speed the first flying time cost per unit of distance,
4. storing the sum of the first fuel cost per unit of distance and the first flying time cost per unit of distance as a first total cost per unit distance,
5. changing the fuel flow by a predetermined amount to a second fuel flow,
6. determining from the second fuel flow, the second speed resulting from the second fuel flow and the fuel price the second fuel cost per unit of distance,
7. determining from the second aircraft speed and the flying time cost the second flying time cost per unit of distance,
8. adding together the second fuel cost per unit of distance and the second flying time cost per unit of distance to provide a second total cost per unit distance,
9. comparing the first total cost per unit distance and the

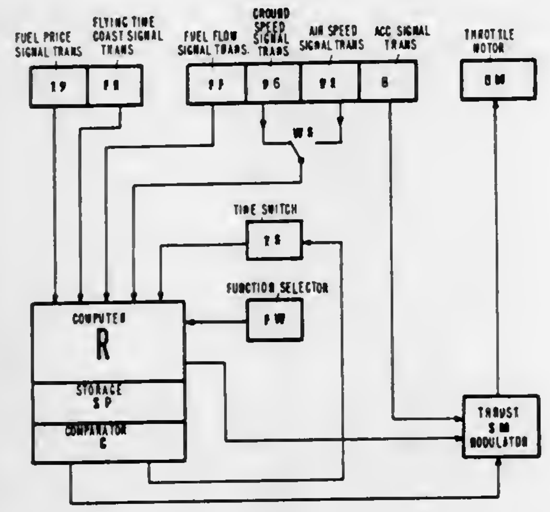

second total cost per unit distance to determine which is the lesser amount,
10. automatically adjusting the fuel flow a predetermined amount from said second fuel flow to a third fuel flow in the direction of the lesser of the first or second total cost per unit of distance,
11. successively repeating steps (5) through (10) until a minimum total cost per unit of distance is determined at a final fuel flow.

4,063,073
COMPUTER SYSTEM TO PREVENT COLLISION BETWEEN MOVING OBJECTS SUCH AS AIRCRAFT MOVING FROM ONE SECTOR TO ANOTHER
Larry G. Strayer, 10300 Strafford Lane, Chatsworth, Calif. 91311
Filed Nov. 29, 1974, Ser. No. 528,435
Int. Cl.² G06F *15/50*
U.S. Cl. 364—439 **1 Claim**

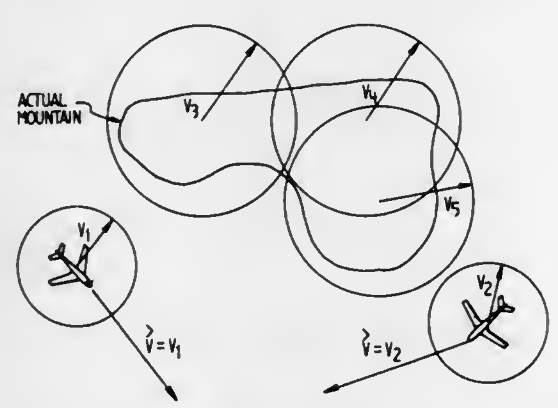

1. A method of preventing collisions between aircraft moving in an aircraft control sector comprising:

continuously generating signals in each aircraft moving within the aircraft control sector which represent the instantaneous velocity and altitude of each aircraft,

establishing a communication link between each aircraft moving within the control sector and a ground station for providing the ground station with the signals representative of the instantaneous velocity and altitude of each aircraft moving within the aircraft control sector,

defining an imaginary airspace around the center of each aircraft, the airspaces having a given radius (R) and height (H), and moving with and at the same velocity as the aircraft,

defining an imaginary airspace having zero velocity around selected objects of terrain located within the aircraft control sector,

updating the parameters of each defined airspace as the corresponding aircraft travels by analysis of the instantaneous velocity and altitude of each aircraft moving within the control sector which has been relayed to the ground station by the communication link between the aircraft and the ground station,

comparing the parameter of each aircraft defined airspace one at a time with the parameter of all other defined airspaces within a discreet altitude band to determine whether there is an existing or future course conflict under predetermined criteria,

producing an indication in the event such conflict is determined, and

communicating with any aircraft moving within the control sector on which an indication of conflict has been determined.

4,063,074
DEVICE FOR MEASURING RADIATION ABSORPTION OR RADIATION EMISSION DISTRIBUTIONS IN A PLANE THROUGH A BODY
Wolfgang Wagner, Norderstedt, Germany, assignor to U.S. Philips Corporation, New York, N.Y.
Filed Sept. 4, 1975, Ser. No. 610,445
Claims priority, application Germany, Sept. 5, 1974, 2442412
Int. Cl.² G01T *1/16;* **G01N** *23/02;* **G06F** *15/52*
U.S. Cl. 364—414 **8 Claims**

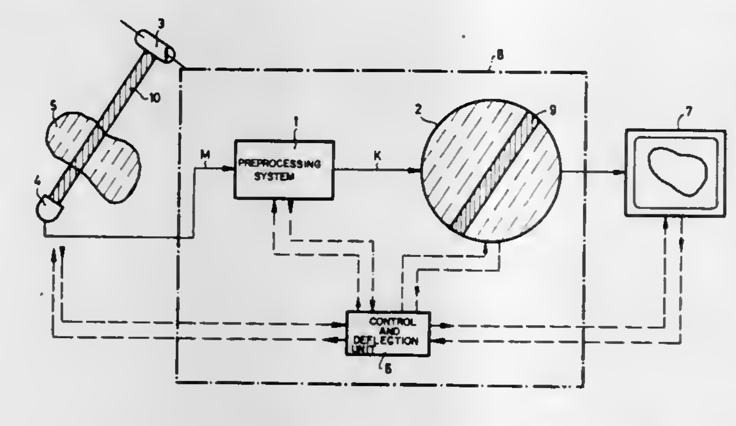

1. A device for measuring the spatial distribution of the absorption or emission of radiation in a plane of a body, comprising:

means for measuring the absorption or emission of the body in a large number of directions all situated in the plane, the measurements forming a multiplicity of measuring series, each measuring series comprising a multiplicity of measuring values measured along approximately parallel straight lines, the lines of different series being oriented in different directions;

a preprocessing unit for calculating a correction value corresponding to each measuring value from the measuring values of the same series in accordance with a predetermined function,

a cathode-ray tube device having a charge storage target area for superposing correction values, the target area being scanned in parallel strips corresponding in position and direction with the straight lines of the measuring values, the amount of charge added or taken away from each strip being determined by the correction value of the corresponding measuring value; and

a control section for controlling the preprocessing unit and the cathode-ray tube device such that while the cathode-ray tube scans a strip corresponding to a measuring value, the preprocessing unit calculates the correction value corresponding to the next measuring value.

4,063,075
WELDING AND AUTOMATION CONTROL SYSTEM
Donald J. Collom, Clare, Mich., assignor to Weltronic Company, Southfield, Mich.
Continuation of Ser. No. 553,919, Feb. 28, 1975, abandoned. This application June 1, 1976, Ser. No. 691,850
Int. Cl.² B23K *9/10*
U.S. Cl. 364—119 **6 Claims**

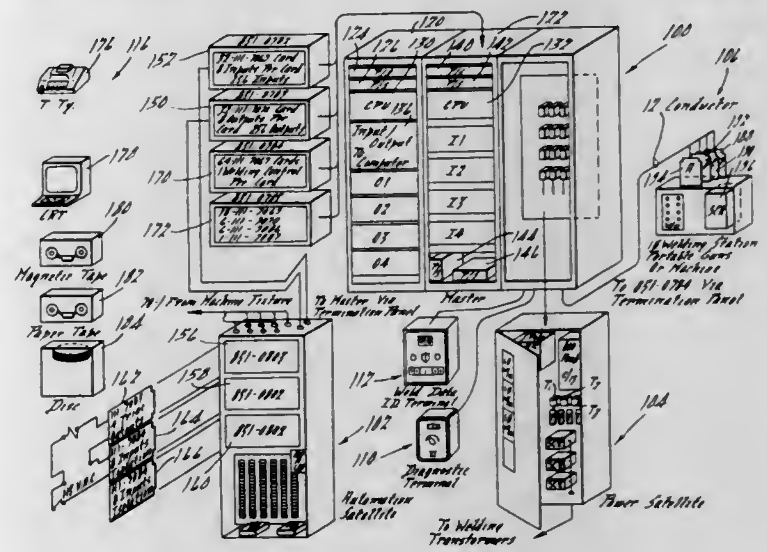

1. In a welding control system including a general purpose computer having computer cycles and programmed, to provide timing signals for the various portions of a welding sequence, and a hardware control system for the welder, the improvement comprising circuit means for enabling the hardware controller in response to a signal generated by the computer, said computer having an output data buss, said enabling signal being generated at least once for each computer cycle during the operation of said computer and said control system.

4,063,076
METHOD OF AUTOMATIC WIDTH CONTROL OF HOT ROLLED STRIPS
Yasuo Morooka, and Shinya Tanifuji, both of Hitachi, Japan, assignors to Hitachi, Ltd., Japan
Filed Dec. 16, 1976, Ser. No. 751,053
Claims priority, application Japan, Dec. 26, 1975, 50-154969; Jan. 7, 1976, 51-826
Int. Cl.² B21B *37/10*
U.S. Cl. 364—472 **17 Claims**

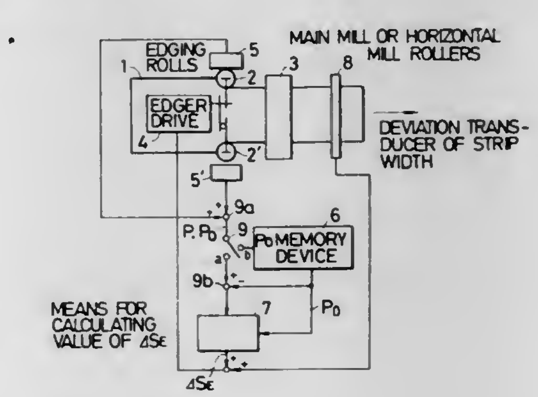

1. A method of automatic width control of hot rolled strip comprising guessing the temperature of a strip under edging rolls, adjusting the roll position of said edging rolls based on the relation between the strip temperature and the deviation of the strip width, and controlling the strip width to be a certain determined width.

4,063,077
SOLVENT PROGRAMMER CONTROLLER
Julian R. Wright, 3204 Rexford, Austin, Tex. 78723
Filed Feb. 15, 1977, Ser. No. 768,778
Int. Cl.² G01N *31/08;* G06F *15/46*
U.S. Cl. 364—502 11 Claims

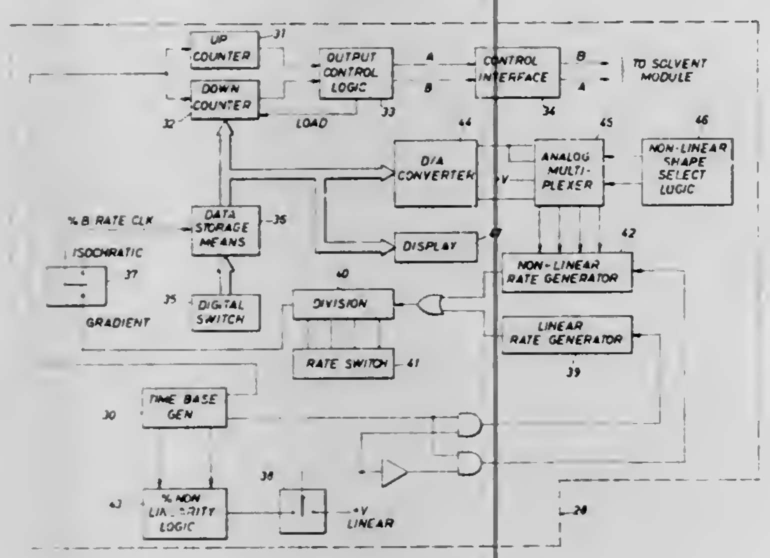

1. In a solvent programmer apparatus that provides programmed solvent mixtures for introduction to a liquid chromatographic analyzer by accessing first and second solvents during a defined cycle of operation and proportioning the same on the basis of the time within the cycle that each solvent is accessed, a controller comprising:
a time base generator for generating a timing clock signal of a prescribed frequency;
first and second counters receiving the timing signal from said time base generator;
said first counter defining a cycle of operation within which the solvents are proportioned;
data storage means for holding a representation of the percentage value of the first solvent that is to be in a mixture produced by the solvent programmer; and
output control logic responsive to the count value in said first and second counters for causing
the first solvent to be accessed upon said first counter reaching a prescribed count that indicates the beginning of a cycle of operation and
the second solvent to be accessed for the remainder of the cycle of operation, upon said second counter reaching a prescribed count which is dependent upon the percentage value stored in said data storage means, with access of the first solvent being discontinued.

4,063,078
CLOCK GENERATION NETWORK FOR LEVEL SENSITIVE LOGIC SYSTEM
Sumit Das Gupta, Syracuse, and Edward Baxter Eichelberger, Purdy Station, both of N.Y., assignors to International Business Machines Corporation, Armonk, N.Y.
Filed June 30, 1976, Ser. No. 701,376
Int. Cl.² G06F *1/04*
U.S. Cl. 364—700 21 Claims

16. A clock generation network for providing first and second pulse trains, where each said pulse in said first pulse train is precisely time displaced from each said corresponding pulse in said second pulse train, said clock generation network comprising:
an input terminal for receiving a periodic input;
first and second interconnected logical circuit means connected to said input terminal;
said first logical circuit means comprised of inverter circuit means and AND circuit means having an output for electrically manifesting said first pulse train;

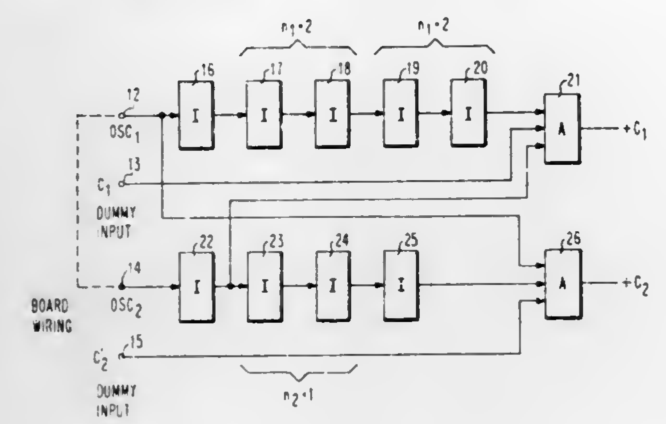

said second logical circuit means comprised of inverter circuit means and AND circuit means having an output for electrically manifesting said second pulse train.

4,063,079
LAMP ADAPTOR WITH FINIAL MOUNTING
Abe H. Feder, 15 W. 38 St., New York, N.Y.
Filed Feb. 18, 1976, Ser. No. 659,077
Int. Cl.² F21V *17/00*
U.S. Cl. 362—290 10 Claims

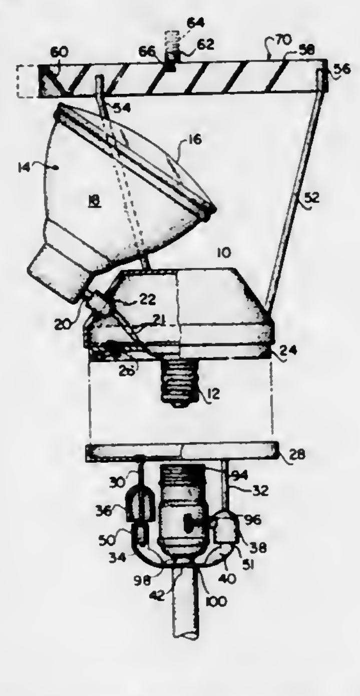

1. A lamp adaptor with finial support comprising:
A. a base including at least one base socket for support of an electric bulb fixture, together with an electrical connection extending from said socket;
B. an exterior male plug contacting said electrical connection and extending from said base, so as to be engageable with an electric lamp socket;
C. at least one electrical lighting fixture supported in said base socket;
D. a baffle supported above said base, so as to direct selectively light from said electric lighting fixture with respect to said base; and
E. a base support engageable at its top with the bottom of said base and including at least one strut member extending downwardly, so as to be engageable with an electrical lamp socket support;
all in combination with a threaded electric light bulb socket into which said exterior male plug is fitted, said socket being mounted upon an elongated arm and having a collar encircling said arm, so as to be engageable with said strut member extending downwardly so as to be engageable with an electric lamp socket support.

4,063,080
METHOD OF PROPAGATION DELAY TESTING A LEVEL SENSITIVE ARRAY LOGIC SYSTEM
Edward Baxter Eichelberger, Purdy Station, N.Y.; Eugene Igor Muehldorf, Potomac, Md.; Ronald Gene Walther, Vestal, N.Y., and Thomas Walter Williams, Longmont, Colo., assignors to International Business Machines Corporation, Armonk, N.Y.
Filed June 30, 1976, Ser. No. 701,041
Int. Cl.² G06F *11/00*
U.S. Cl. 235—302 25 Claims

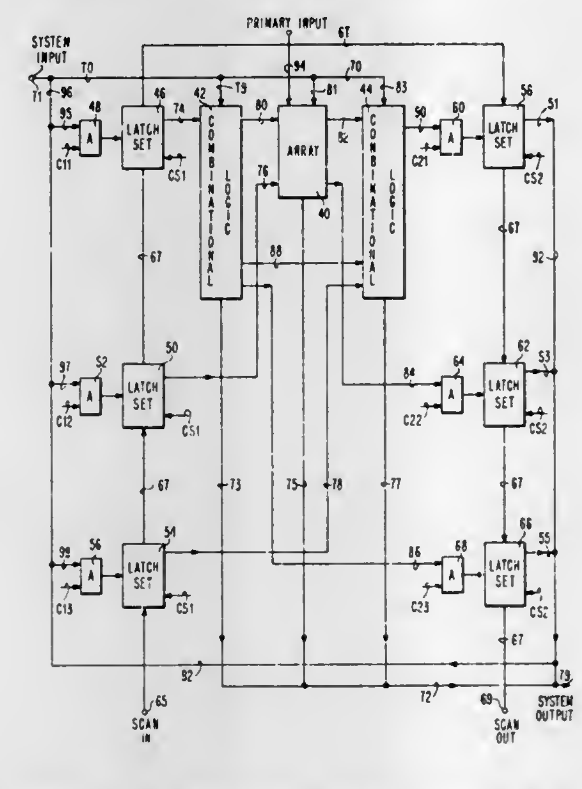

1. A method of propagation delay testing a single-sided delay dependent level sensitive embedded array logic unit having primary inputs and primary outputs and formed of interconnected combinational network circuit means, array circuit means and sets of sequential circuit means having access for scanning independent of said primary inputs and outputs, said method including the steps of:
a. selecting for test sensitization one path from a plurality of different paths, where each of said plurality of different paths extends from primary inputs of said single-sided delay dependent level sensitive embedded array logic unit to primary outputs of said unit;
b. initializing the states of said sets of sequential circuits;
c. applying a test pattern to at least some of said primary inputs for said selected path;
d. altering at least one of said primary inputs to the selected path;
e. monitoring the output of said selected path for a change of state after a given period of time has elapsed from the altering of the primary input, whereby an indication of the propagation delay through the selected path is obtained.

4,063,081
COMPUTER APPARATUS
Robert J. Handly, and Robert H. Douglas, both of Phoenix, Ariz., assignors to Honeywell, Fort Washington, Pa.
Filed June 8, 1976, Ser. No. 693,857
Int. Cl.² G06F *9/20;* G11C *29/00*
U.S. Cl. 235—312 6 Claims

1. In a computer apparatus including means for producing a digital signal to be monitored, a signal monitoring means comprising:
selectively settable reference control means or establishing a preset digital reference signal,
digital comparator means for comparing said reference signal with said signal to be monitored, said comparator means being responsive to an identity between said compared signals to produce an output signal,
alarm control means responsive to said output signal from said comparator means for actuating alarm condition means in said computer apparatus, and

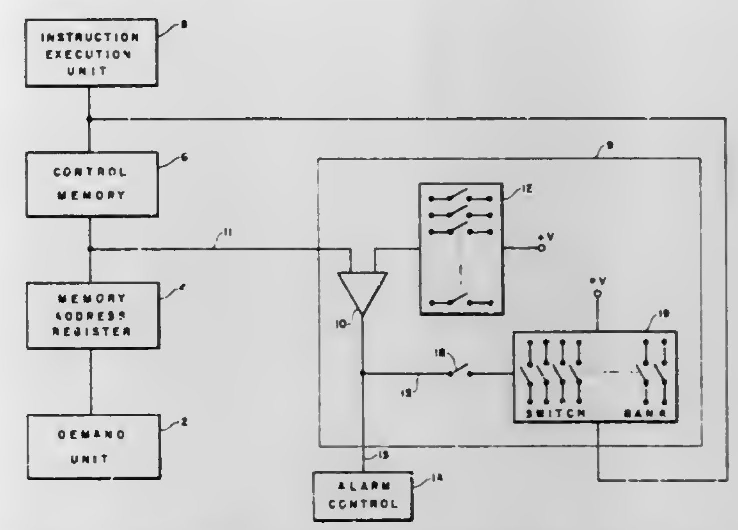

selectively settable control signal means for producing a preset digital control signal for said computer apparatus in response to said output signal from said comparator means.

4,063,082
DEVICE GENERATING A DIGITAL FILTER AND A DISCRETE CONVOLUTION FUNCTION THEREFOR
Henri Nussbaumer, LaGaude, France, assignor to International Business Machines Corporation, Armonk, N.Y.
Filed Mar. 10, 1976, Ser. No. 665,473
Claims priority, application France, Apr. 18, 1975, 75.12569
Int. Cl.² G06F *15/34*
U.S. Cl. 364—728 5 Claims

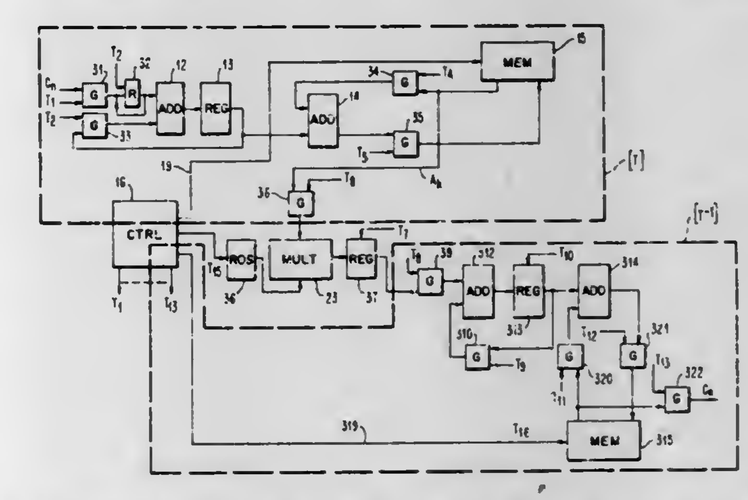

1. A device for generating the circular convolution function of two series of values $\{a_n\}$ and $\{b_n\}$ said device including:
a pair of means, each for generating the primitive root transforms $\{A_k\}$ or $\{B_k\}$ respectively of one of said series $\{a_n\}$ and $\{b_n\}$
means connected to said pair of means for multiplying term-by-term, the terms of said transforms generated by said pair of means; and
a third means of generating a series of terms which are a constant multiple q of the terms of the inverse transform of the series of said products from said multiplying means, said device characterized in that at least one of said pair of means generating said primitive root transforms includes:
a. means for building by successive accumulations, multiples of the terms of the associated one of said series; and
b. means for building the primitive root transforms of the terms of said associated one of said series by successive and selective accumulations of said multiples.

4,063,083

DATA COMMUNICATION SYSTEM USING LIGHT COUPLED INTERFACES

Wade Thomas Cathey, 359 Pinebrook Hills, Boulder, Colo. 80302, and Burton Jordon Smith, 1557 S. Dexter Way, Denver, Colo. 80222

Filed Apr. 21, 1976, Ser. No. 679,022

Int. Cl.² H04B *9/00*

U.S. Cl. 250—199 **22 Claims**

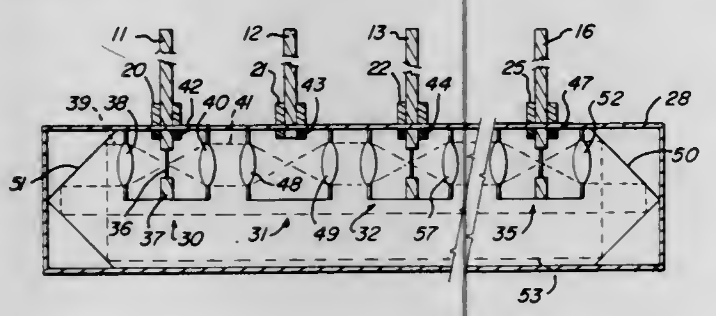

1. In a system for allowing communications between a plurality of stations through a free space light column path, apparatus for establishing a communication interface for a said station comprising:
a frame mounted in transverse relation in the light column path, said frame including a plurality of means transferring light therethrough for passing portions of the light column intended for other stations,
at least one light sensitive element attached relative to said frame for intercepting a portion of the light column intended for the associated station and for producing an electrical output signal indicative of the intercepted light level, and
means coupling said element electrical output signal to the associated station for permitting data communication therewith from another station.

4,063,084

DUAL CHANNEL OPTICAL HOMODYNE RECEIVER

Frank E. Goodwin, Malibu, and Thomas A. Nussmeier, Thousand Oaks, both of Calif., assignors to Hughes Aircraft Company, Culver City, Calif.

Filed July 19, 1976, Ser. No. 706,723

Int. Cl.² H04B *9/00*

U.S. Cl. 250—199 **11 Claims**

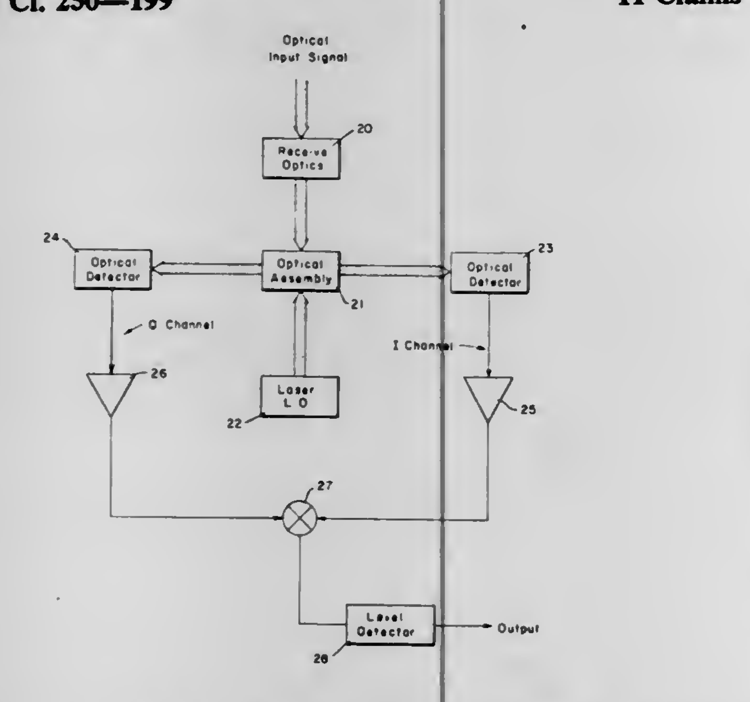

1. An optical homodyne receiver comprising, in combination:
optical input means for receiving an input signal, said input signal being characterized by a carrier frequency and information-containing modulation components;
a laser oscillator for generating a local oscillator signal having substantially the same frequency as said carrier frequency;
an optical assembly coupled to said optical input means and to said laser oscillator, said optical assembly being capable of combining a first portion of said input signal with a first portion of said local oscillator signal and a second portion of said input signal with a second portion of said local oscillator signal, the phase difference between the first portion of said local oscillator signal and the carrier of the first portion of said input signal differing by substantially 90 degrees from the phase difference between the second portion of said local oscillator signal and the carrier of the second portion of said input signal;
a first optical detector coupled to said optical assembly for detecting the first portion of said input signal with respect to the first portion of said local oscillator signal to produce a first video signal;
a second optical detector coupled to said optical assembly for detecting the second portion of said input signal with respect to the second portion of said local oscillator signal to produce a second video signal;
means coupled to said first optical detector for squaring said first video signal;
means coupled to said second optical detector for squaring said second video signal;
summing means for combining said first and second squared video signals; and
means for deriving an output signal from said summing means.

4,063,085

METHOD OF AND APPARATUS FOR ELECTRONIC SCANNING

Michel Henri Montanvert, Grenoble, France, assignor to Cometa S. A., Montfleury, France

Filed Nov. 3, 1975, Ser. No. 628,345

Int. Cl.² G01D *21/04*

U.S. Cl. 250—221 **8 Claims**

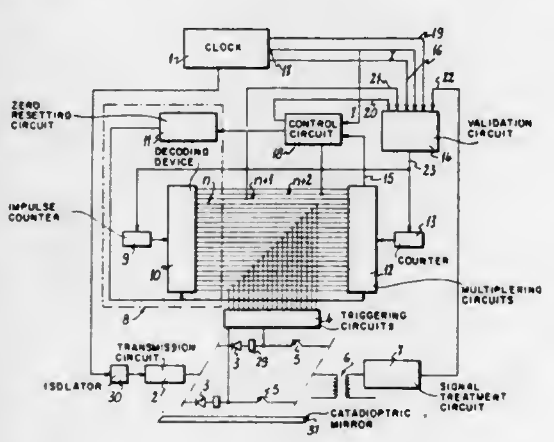

1. A method of controlling a scanning luminous barrier system comprising
providing a series of electro-luminescent diodes, and associating a series of phototransistors respectively with said electro-luminescent diodes,
triggering said diodes in sequence to emit a light pulse, and simultaneously triggering the associated phototransistors in sequence to enable the phototransistors to sense a light pulse,
reflecting the light pulse from each diode to its associated phototransistor for detection,
simultaneously pulsing a multi state switching circuit and a multi state comparison circuit,
triggering said diodes and phototransistors in response to the state of said switching circuit,
providing a first control step, said first control step including comparing the state of the switching circuit with the state of the comparison circuit to determine agreement between the states of these circuits and continuing triggering of the electro-luminescent diodes and phototransistors only upon a condition of agreement of the states of the switching circuit and comparison circuit,
providing a second control step, said second control step including monitoring signals indicating reception of light pulses by the phototransistors and stopping the scanning if the signal monitored indicates reception of light pulses by the phototransistors during a time period in which said diodes are not to be triggered,
providing a third control step, said third control step including changing the state of said switching circuit during a time period in which said diodes are not to be triggered while maintaining the state of the comparison circuit and continuing the scanning only if there is disagreement between the levels of the comparison circuit and the switching circuit, and
providing a fourth control step, said fourth control step including monitoring the level of the light pulses sensed at the phototransistors, providing an indication of signal from the phototransistors only if the level monitored is within a predetermined range of levels, and stopping sequencing in the absence of indication of signal from the phototransistors.

4,063,086

SCALE READING APPARATUS

Touji Hirose, Yokohama, Japan, assignor to Mitutoyo Manufacturing Co., Ltd., Tokyo, Japan

Filed Sept. 22, 1976, Ser. No. 725,573

Claims priority, application Japan, Sept. 22, 1975, 50-130267[U]

Int. Cl.² H01J *3/14*

U.S. Cl. 250—237 G **6 Claims**

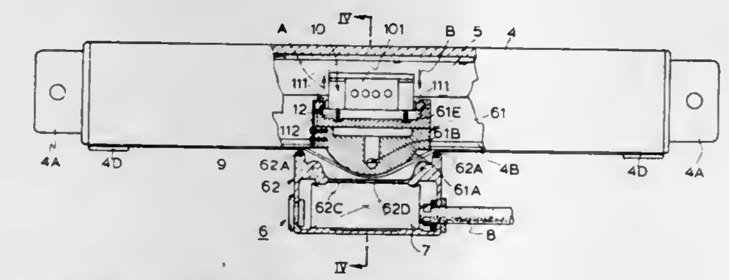

1. A scale reading apparatus comprising:
a housing of hollow tubular construction;
a transparent bar scale provided in said housing;
a longitudinal guide opening in said housing extending in the longitudinal direction of said scale;
a pair of slide surfaces extending parallel to said guide opening;
a slider member for operative association with said housing, said slider having an extension portion extending from the exterior of said housing into the interior thereof through said guide opening;
a sensor holding member detachably coupled to the end of said extension portion;
a plurality of sensors for reading said scale provided in said sensor holding member;
a magnetic means provided in the longitudinal side wall of said housing adjacent to said slide surfaces and along both sides of said guide opening;
a flexible strip band extending longitudinally along and substantially covering the entire length of said guide opening, said flexible strip band being made of a magnetic material and being held in contact with said guide opening by said magnetic members;
an arcuate protrudent guide portion formed in said extension portion of said slider member, said guide portion being in slidable contact with the inner surface of said strip band;
holding members provided at the ends of said slider member to press down said strip band to said guide opening; and
a means for detachably coupling said sensor holding member to said extension portion.

4,063,087

REDUCING NOISE IN URANIUM EXPLORATION

Robert L. Fleischer, Schenectady, N.Y., assignor to Terradex Corporation, Walnut Creek, Calif.

Filed Aug. 18, 1976, Ser. No. 715,225

Int. Cl.² G01V *5/00*

U.S. Cl. 250—253 **11 Claims**

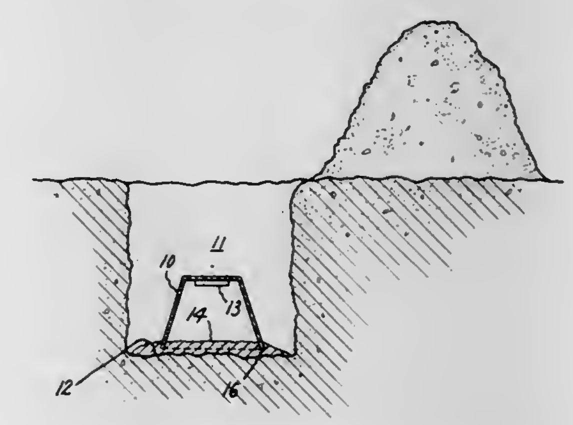

1. Radon detection apparatus for uranium-ore prospecting comprising in combination:
an imperforate protective housing defining an enclosed volume and having an opening therein, said housing being adapted for burial in the earth with said opening disposed at the underside thereof,
an unshielded body of alpha particle detection material disposed within said housing and secured thereto for direct exposure to soil gases entering said enclosed volume through said opening and
a quantity of a porous medium for closing off said opening whereby soil gases leaving the soil and entering said housing must traverse the thickness of said porous medium, said porous medium being substantially free of content emitting either ^{220}Rn or ^{222}Rn.

4,063,088

METHOD OF AND MEANS FOR TESTING A GLANCING-INCIDENCE MIRROR SYSTEM OF AN X-RAY TELESCOPE

Carroll C. Dailey, Huntsville, Ala., assignor to The United States of America as represented by the Administrator of the National Aeronautics and Space Administration, Washington, D.C.

Continuation-in-part of Ser. No. 445,398, Feb. 25, 1974, abandoned. This application Nov. 25, 1975, Ser. No. 636,193

Int. Cl.² G01N *23/20*

U.S. Cl. 250—272 **2 Claims**

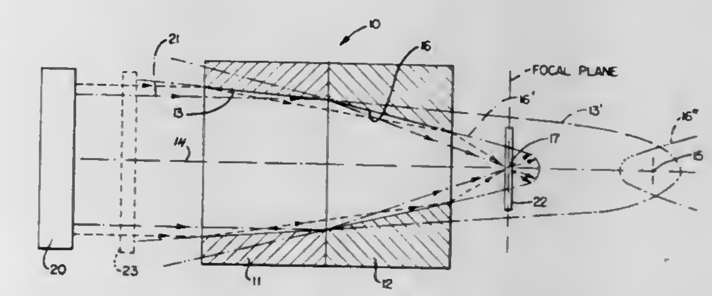

1. Apparatus for testing a glancing-incidence mirror system of an X-ray telescope, the system having an even number of coaxial and confocal reflecting surfaces comprising:
a. an X-ray laser for generating a collimated test beam of X-rays directed along the axis of the system and incident on a substantial area of the reflecting surfaces;
b. a sheet of film located at the common focus and lying in the focal plane of the reflecting surfaces; and
c. a test pattern interposed between the laser and the mirror so that the resultant image on the film can be compared with the test pattern to determine the performance of the system.

4,063,089
X-RAY CHEMICAL ANALYZER FOR FIELD APPLICATIONS

Otto O. M. Gamba, Clairton, Pa., assignor to The United States of America as represented by the United States Energy Research and Development Administration, Washington, D.C.

Filed Nov. 24, 1976, Ser. No. 744,493
Int. Cl.[2] G01N *23/20*

U.S. Cl. 250—272 3 Claims

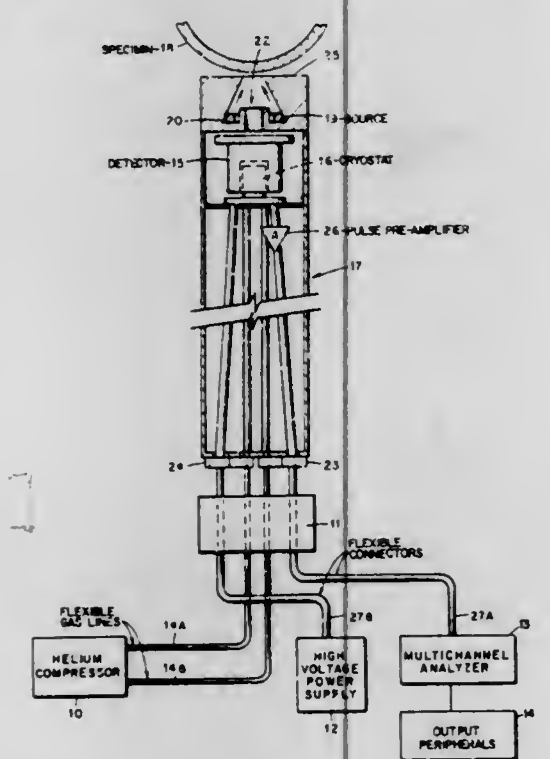

1. A self-contained portable field X-ray multichannel analyzer for in situ analysis of the chemical composition of a specimen comprising:
 a cylindrical sensing probe having
  means for receiving electrical energy and a cooling fluid at one end thereof, and
  an irradiator head at the other end thereof, said irradiator head containing
   a radioactive γ emitter adapted to irradiate said specimen with γ-rays, thereby generating X-ray photons having an energy spectrum chacteristic of the chemical composition of said specimen;
   a radiation detector adapted to receive said X-rays and produce output electrical pulses having an amplitude proportional to the energy level of said X-ray photons;
   a pulse amplifier connected to said detector adapted to receive said output pulse and provide an amplified output pulse thereof; and
   a cryostat in a heat exchange relationship with said detector so as to maintain said detector at a cryogenic temperature;
 a closed cycle cryocooler, said cryocooler being remotely locatable with respect to said cryostat, flexibly coupled thereto and adapted to provide a closed cycle circulation of compressed coolant through said cryostat so as to maintain said detector at a cryogenic temperature, independent of any supply of consumable cryogenic fluid;
 a multichannel X-ray analyzer adapted to receive, sort, store, count and record said X-ray photons present in said X-radiation energy spectrum, said multichannel X-ray analyzer being remotely locatable with respect to said pulse amplifier and flexibly electrically connected thereto so as to receive said output pulse therefrom;
 a voltage source adapted to provide an operating voltage potential for said energy dispersive spectrometry detecting means; and
 means for connecting said operating voltage potential across said detecting means, said connecting means being flexible so as to facilitate remote relocation of said voltage source with respect to said detecting means.

4,063,090
METHOD FOR ISOTOPE SEPARATION BY PHOTODEFLECTION

Anthony F. Bernhardt, Oakland, Calif., assignor to The United States of America as represented by the United States Energy Research and Development Administration, Washington, D.C.

Filed Oct. 30, 1974, Ser. No. 519,706
Int. Cl.[2] B01D *59/44*

U.S. Cl. 250—284 8 Claims

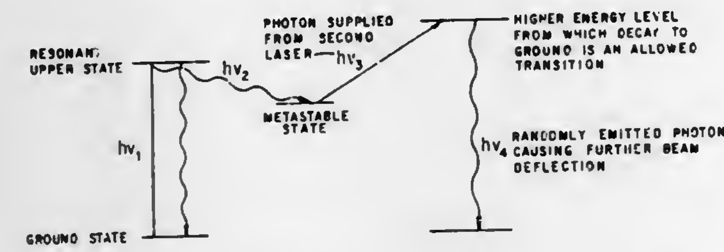

1. A method for separating a mixture of isotopes of the same element, one of said isotopes having the property that it will absorb light of a predetermined frequency and be raised thereby from an initial energy state to a primary excited state from which there is a significant probability of radiative decay to a metastable excited state and at least one other of said isotopes having the property that it will not absorb light of said predetermined frequency which comprises:
 a. forming a directed beam of vapor consisting essentially of atoms of said isotopes;
 b. irradiating the isotope beam with a primary directed beam of light of said predetermined frequency, the light absorbing atoms being thereby raised to said primary excited state from which a portion of the thus excited atoms radiatively decays into a metastable excited state and another portion of the thus excited atoms radiatively decays into the initial energy state;
 c. simultaneously with step (b), irradiating the light absorbing atoms with a secondary directed beam of light having a frequency substantially different from that of said primary beam and so selected as to cause depopulation of the metastable excited state, said light absorbing atoms being deflected toward a predetermined location as a result of said primary and said secondary irradiation steps; and
 d. collecting the deflected atoms at said predetermined location.

4,063,091
HIGH SPEED SWITCHING CIRCUIT

Alan E. Gee, Sunnyvale, Calif., assignor to American Optical Corporation, Southbridge, Mass.

Filed Oct. 18, 1976, Ser. No. 733,643
Int. Cl.[2] H01J *37/26*

U.S. Cl. 250—310 1 Claim

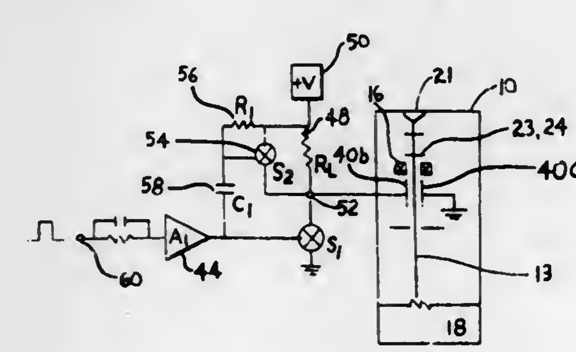

1. In a scanning charged particle microprobe comprising a charged particle gun for generating a beam of charged particles directed to impinge upon a specimen, scanning means to cause said beam to scan the surface of said specimen, the improvement comprising:
 a high-speed beam-deflecting circuit comprising a pair of deflection plates disposed intermediate the charged particle gun and said specimen so disposed such that said beam is also intermediate each of said pair of plates;
 means connecting one of said plates to grounding means;
 a voltage source electrically connected to the other of said pair of plates for deflecting said beam;
 current-limiting resistive means connected in series with said beam-deflecting voltage source and said other beam-deflecting plate;
 vertical MOSFET switch means connected to said deflection circuit at a point intermediate said current-limiting resistance means and said other plate, said limiting resistor and said switch having a predetermined resistance ratio;
 a ground source connected to the other side of said switch means;
 actuating means for said switch operationally connected to an informational signal carrying beam-blanking instructions and connected to said switch so as to drive said switch in response to said information signal;
 second semi-conducting switching means connected to a point intermediate said plate and said current-limiting resistor and said deflection potential source, said second switch being operated during the transient time substantially equal the resistance-capacitive network forming said plates and current-limiting resistor.

4,063,092
SELECTIVE IMAGE AREA CONTROL OF X-RAY FILM EXPOSURE DENSITY

C. Martin Berdahl, Sierra Madre, Calif., assignor to The United States of America as represented by the Administrator of the National Aeronautics and Space Administration, Washington, D.C.

Filed Apr. 9, 1976, Ser. No. 675,328
Int. Cl.[2] G03B *41/16*

U.S. Cl. 250—322 3 Claims

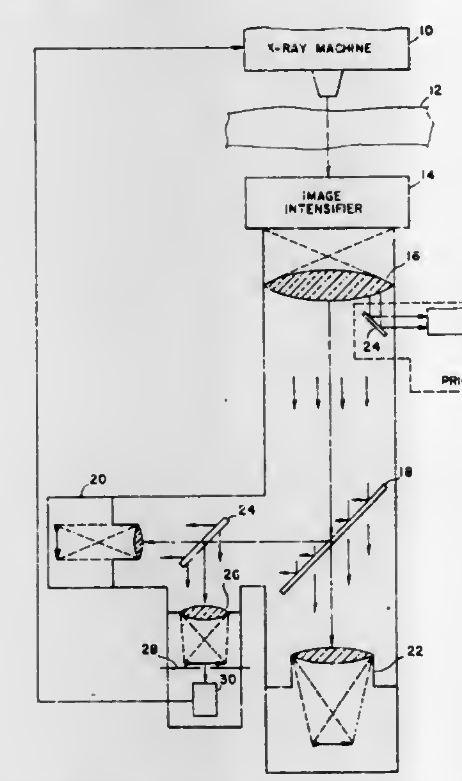

1. A system of the type wherein the x-rays passing through a patient are applied to an image intensifier which generates a light image in response thereto, the light image is collimated and then directed at a first beam splitting means which directs some of the light at a motion picture camera and passes the remainder of the light to a television camera, the improvement comprising
 a mask having an aperture sized to encompass the central area of interest of the image being intensified by said image intensifier,
 a light intensity sensing means responsive to light impinging thereon for controlling the x-ray intensity required for determining correct motion picture camera exposure, said light intensity sensing means being positioned at one side of said aperture mask to receive an area of light passing therethrough corresponding to the area of said aperture,
 a second beam splitting means positioned between said first beam splitting means and said motion picture camera for receiving light directed at said motion picture camera by said first beam splitting means and directing a portion thereof at said apertured mask to pass therethrough and impinge upon said light intensity sensing means, and
 an imaging lens between said second beam splitter and said apertured mask for focusing the image defined by the light, directed by said second beam splitting means, on said apertured mask.

4,063,093
INFRARED VIDICON SYSTEM

Robert W. Astheimer, Westport, and Gerald Falbel, Stamford, both of Conn., assignors to Barnes Engineering Company, Stamford, Conn.

Filed Nov. 22, 1976, Ser. No. 743,552
Int. Cl.[2] H01J *31/49*

U.S. Cl. 250--330 7 Claims

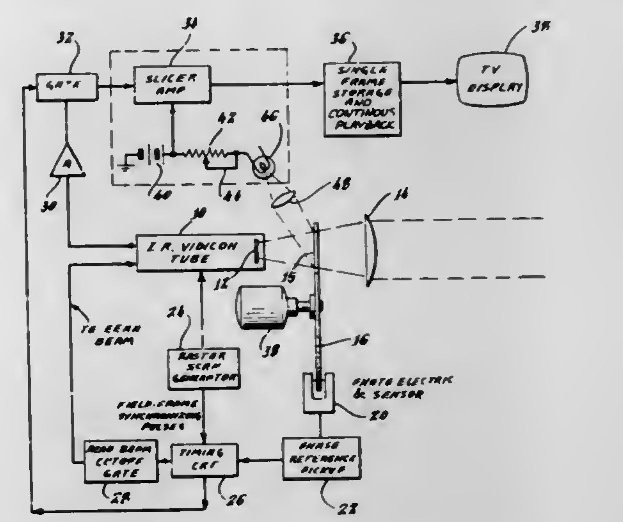

1. An infrared vidicon system for providing an infrared picture of a target scene, comprising in combination
 a. a vidicon image tube having a capacitance type vidicon target,
 b. chopper means for modulating the radiation applied to said vidicon target, the duty cycle of said chopper means being less than 50%,
 c. storage means for storing the scene of a single frame of said vidicon image tube,
 d. a display monitor, and
 e. means for continuously playing back on said display monitor said single frame from said storage means.

4,063,094
GAS ANALYZER

Mark Schuman, Washington, D.C., assignor to American Standard Inc., New York, N.Y.

Filed Oct. 17, 1966, Ser. No. 587,054
Int. Cl.[2] G01J *1/00*

U.S. Cl. 250—338 10 Claims

1. Apparatus for detecting the presence of chemical substances in a gaseous medium by detection of characteristic infrared spectral wavelengths of radiant energy emitted therefrom, said apparatus comprising a variable volume optical cavity; said optical cavity having highly reflective surfaces arranged to provide random optical paths for said emitted radiant energy; means for cyclically varying the volume of said cavity for adiabatic compression and expansion of a sample of said gaseous medium within said cavity, so that the temperature of said sample varies substantially as $TV^{\gamma-1} = K$, where T is the temperature, V the volume, and γ the ratio of specific heat at constant pressure and specific heat at constant volume of said sample, and K is a constant; and means for detecting

radiant energy emitted at the characteristic infrared emission wavelength of the substance or substances sought to be detected, emanating from said sample as a result of said temperature variation; said optical cavity comprising a hollow cylinder having an end wall, said means for cyclically varying the

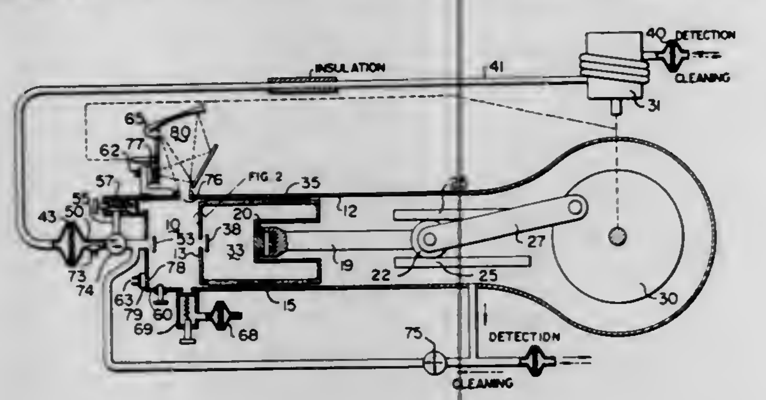

cavity volume including a hollow gas centered piston reciprocable inwardly and outwardly of said cylinder and having a face in confronting relationship and forming with said end wall a cavity of high volume-to-surface area ratio at maximum compression of said sample.

4,063,095
BALANCING RADIOMETER
Solomon Wieder, 17 Blueberry Hill Road, Monsey, N.Y. 10952
Filed Dec. 10, 1976, Ser. No. 749,213
Int. Cl.[2] G01J *1/00*
U.S. Cl. 250—338 10 Claims

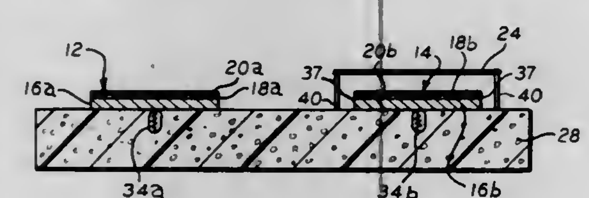

1. A balancing radiometer for measuring the intensity of a source of electromagnetic radiation comprising:
a. a pair of substantially identical electromagnetic radiation sensors, each of said sensors including:
i. a thermally conductive substrate, at least one surface of said substrate being comprised of an electrically insulating material, said at least one surface being disposable in confronting relation with said radiation source; and
ii. means disposed on said at least one surface of said substrate for resisting the flow of electric current and absorbing incident radiation;
b. means for shielding one of said pair of sensors from said radiation source, the other of said sensors being unshielded;
c. first means disposed in thermal conducting relation with the substrate of said shielded sensor for providing a first signal proportional to the temperature of said shielded sensor;
d. second means disposed in thermal conducting relation with the substrate of said unshielded sensor for providing a second signal proportional to the temperature of said unshielded sensor;
e. means for comparing said first and second signals;
f. variable power supply means responsive to said signal comparing means;
g. means for connecting said power supply means to said electric current flow resisting means for heating said shielded sensor to a temperature equal to the temperature of said unshielded sensor whereby to equalize said first and said second signals; and
h. means for measuring the power output of said power supply means.

4,063,096
SELF-PROTECTING INFRARED DETECTOR WITH A CONTINUOUSLY VARIABLE ATTENUATOR
Thomas G. Roberts, Huntsville, Ala., assignor to The United States of America as represented by the Secretary of the Army, Washington, D.C.
Filed Jan. 3, 1977, Ser. No. 756,229
Int. Cl.[2] G01J *1/42*
U.S. Cl. 250—343 8 Claims

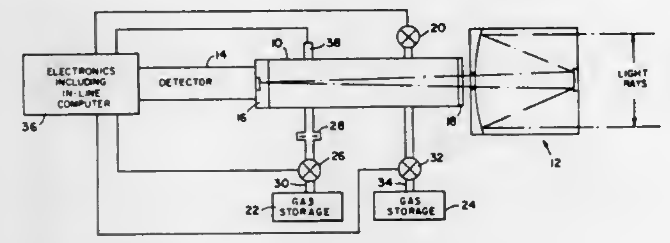

1. In an infrared detection system having an infrared detector and collecting optics, protection means for protecting said detector from high intensity radiation comprising:
a. a gas absorption cell disposed forwardly of said detector to limit the amount of radiation reaching said detector;
b. gas storage means connected to said absorption cell to supply gas thereto;
c. control means for controlling flow of gas to said cell in proportion to the intensity of radiation reaching said cell.

4,063,097
X-RAY BODY SCANNER FOR COMPUTERIZED TOMOGRAPHY COMPRISING INNER FLUID CONTAINER SURROUNDED BY OUTER FLUID CONTAINER
David M. Barrett, Brookfield, Wis.; John L. Henkes, Jr., Latham, N.Y.; Lewis S. Edelheit, Schenectady, N.Y., and Robert Godbarsen, Elm Grove, Wis., assignors to General Electric Company, Schenectady, N.Y.
Filed Sept. 16, 1976, Ser. No. 723,777
Int. Cl.[2] A61B *6/02, 6/04;* G03B *41/16*
U.S. Cl. 250—360 15 Claims

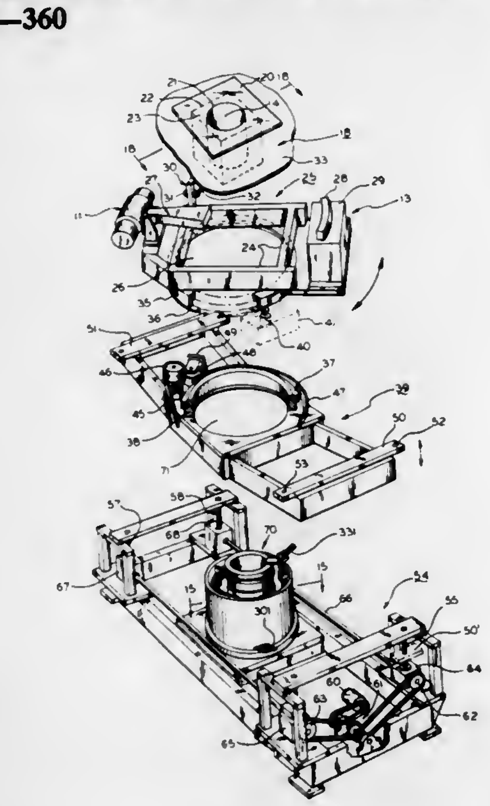

1. Apparatus for examining at least a portion of a body such as a breast with a scanned x-ray beam, comprising:
scan arm means rotatable about a vertical axis that is disposed for being directed through the body portion that is to be examined,
x-ray source means and x-ray detector means mounted on said scan arm means on opposite sides of said axis, said source means being operative to project an x-ray beam through a layer of said body portion toward said detector means,
an x-ray permeable inner container having side wall means with upper edges defining a top opening and being disposed on said axis for containing the body portion and a fluid having x-ray absorption properties comparable to water, which fluid contacts and surrounds said body portion,
an outer container having x-ray permeable side wall means surrounding the inner container and defining a space for water,
means for rotating said outer container concurrently with said scan arm means,
means for supporting a body in a position for said body portion to extend generally vertically into said inner container and to permit tissue adjacent said portion to be substantially contiguous with the upper edges of said inner container, and
conduit means for communicating fluid to and from said containers.

4,063,098
BEAM SCANNING SYSTEM
Harald A. Enge, Winchester, Mass., assignor to Industrial Coils, Inc., Middleton, Mass.
Filed Oct. 7, 1976, Ser. No. 730,436
Int. Cl.[2] G21R *1/08*
U.S. Cl. 250—396 R 13 Claims

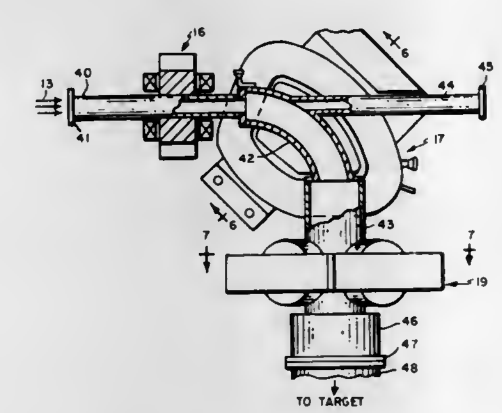

1. A system for deflecting an input beam of charged particles having a spread of momenta from a source thereof to cause said beam to impinge on a target having a predetermined spatial relationship with said source, said system comprising
means responsive to said input beam for periodically scanning said beam in a scanning plane;
means responsive to said periodically scanned beam for deflecting said periodically scanned beam through preselected angle in a deflection plane, the said scanning plane subsequent to said deflection being angularly oriented with respect to said scanning plane prior to said deflection, said deflected and periodically scanned beam being thereupon directed to impinge upon said target plane; and
means for substantially reducing the momentum dispersion of said beam in the deflection plane at said target due to the deflection thereof by said deflecting means and for substantially reducing the momentum dispersion of said beam in the scanning plane at said target due to the periodic scanning movement thereof by said beam scanning means.

4,063,099
DENTAL APPARATUS FOR X-RAY DIAGNOSIS
Ulrich Grassmé, Nurnberg, Germany, assignor to Siemens Aktiengesellschaft, Berlin & Munich, Germany
Filed Apr. 22, 1976, Ser. No. 679,501
Claims priority, application Germany, Apr. 25, 1975, 2518549
Int. Cl.[2] H05G *1/30*
U.S. Cl. 250—413 5 Claims

1. In an apparatus for x-ray diagnosis comprising a unit rotatable about a vertical axis and having an x-ray tube and an opposed holder for x-ray film, a support for the head of a patient disposed between said x-ray tube and said holder, shutter means disposed in front of said holder for passage of x-rays to said film for producing tomograms, x-ray detector means disposed in a position for receiving at least the x-ray radiation passing through the jaw of a patient during the entire duration of a recording and for providing an electrical signal corresponding to the actual x-ray dose output, adjustable means for producing a reference electrical signal corresponding to the desired exposure time for the x-ray film, energizing means for said x-ray tube, and an x-ray dose regulator means having a first input for receiving the electrical signal from the detector

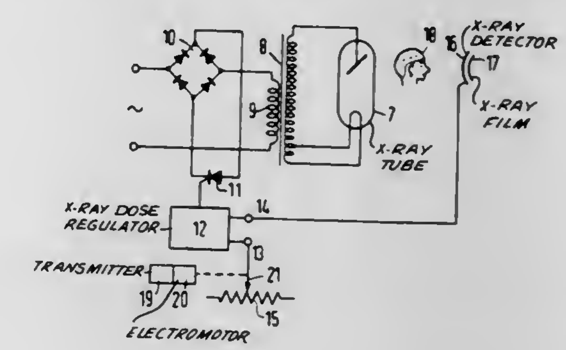

means and a second input for receiving the reference electrical signal, said regulator means activating the energizing means to regulate the x-ray dose output supplied to the film to provide an optimum exposure thereof in response to a comparison of the actual x-ray dose output to the reference electrical signal, the improvements comprising means for producing an output signal related to the speed of transport of the holder and film, and means for receiving said output signal and adjusting the reference electrical signal of said adjustable means in relation thereto so that the reference signal for a desired value x-ray dose output is adjusted as a function of the speed of transport of the holder and film in addition to its dependent on the exposure time of the film.

4,063,100
RADIOGRAPHIC TABLE WITH MOVABLE GRID ASSEMBLY
Lee B. Williams, 396 Dayloma Ave., Ventura, Calif. 93003
Filed Oct. 4, 1976, Ser. No. 729,420
Int. Cl.[2] A61B *6/06*
U.S. Cl. 250—452 4 Claims

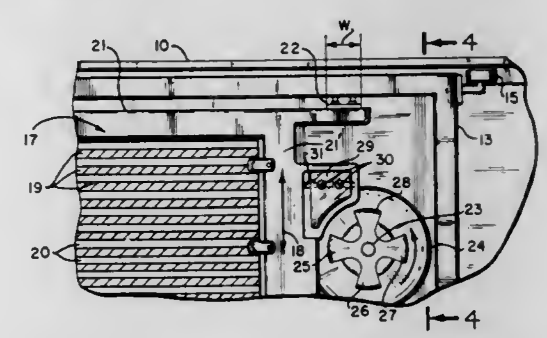

1. A radiographic table with a movable grid assembly including, in combination:
a. a table bed frame;
b. a carriage for a film cassette mounted on said bed frame for longitudinal movement to selected positions between the head and foot of the bed frame;
c. a grid assembly;
d. resilient means mounting said grid assembly to said carriage for transverse oscillating movement;
e. movable magnetic responsive means carried on said carriage; and
f. a magnet in magnetic field coupling relationship to said movable magnetic responsive means secured to said grid assembly, whereby movement of said movable magnetic

responsive means past said magnet in a direction having a transverse component results in transverse oscillating movement of said grid assembly relative to said carriage.

4,063,101
PACKAGE FOR FILMS
Emanuel Hubert Duden, Mortsel, Belgium, assignor to AGFA-GEVAERT N.V., Mortsel, Belgium
Continuation of Ser. No. 464,501, April 26, 1974, abandoned. This application Sept. 11, 1975, Ser. No. 612,544
Claims priority, application United Kingdom, Apr. 27, 1973, 20183/73
Int. Cl.[2] G03B *41/16*; G03C *5/16*
U.S. Cl. 250—475 5 Claims

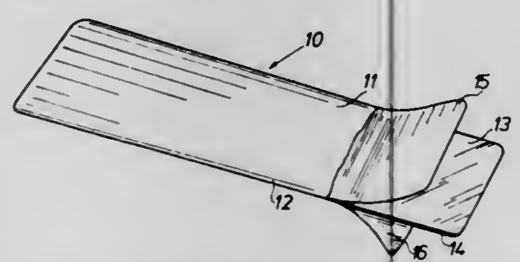

1. An elongated strip package for flat radiographic film in elongated strip form which is adapted to be wound around a tubular body in multiple abutting helical windings with the film strip portions in adjacent windings of said package in tight edge to edge alignment, said package comprising two elongated webs of thermoplastic material disposed in flat face to face contact with opposite surface of said radiographic film strip, said webs having their corresponding longitudinal side edges pinched tightly against the corresponding side edges of said radiographic film strip and being heat sealed to one another along a line directly proximate with each such side edge of said film strip with substantially zero clearance from said side edge, whereby said radiographic film is enveloped in an intimate, tight-fitting sleeve, preventing any displacement of said radiographic film, and said webs having their opposite ends transversely sealed together adjacent the end edges of said strip to hermetically seal the package.

4,063,102
CASSETTE
Mary Rachel Ronci, 15 Cartier St., and Robert Bray Heaton, 18 Cartier St., both of Cranston, R.I. 02910
Filed Dec. 3, 1975, Ser. No. 637,174
Int. Cl.[2] G03B *11/00*
U.S. Cl. 250—482 3 Claims

1. A cassette for sensitive sheet material comprising a frame having a ray transparent base of relatively rigid material having an ambient surface temperature and provided with an uninterrupted surface, four sides provided on said base and forming a chamber, a sheet of static electricity insulating material in said chamber against said base, a sheet of X-ray film in said chamber against said sheet of static electricity insulating material, an X-ray screen in said chamber against said X-ray film, a sheet of static electricity repellant material in said chamber against said X-ray screen, a pressure pad in said chamber against said sheet of static electricity repellant material, and a top slide, means to releasably secure said top slide in said frame in position covering said pressure pad in light tight seal condition and yieldingly urging said pressure pad towards said base, and means on one end of said top slide and a second means on said frame opposite to said means on said top slide to aid in manually engaging and disengaging said top slide from said frame.

4,063,103
ELECTRON BEAM EXPOSURE APPARATUS
Masahiko Sumi, Yokohama, Japan, assignor to Tokyo Shibaura Electric Co., Ltd., Kawasaki, Japan
Filed Apr. 8, 1976, Ser. No. 675,170
Claims priority, application Japan, Apr. 11, 1975, 50-43332; Dec. 10, 1975, 50-146287; Dec. 26, 1975, 50-154767
Int. Cl.[2] H01J *37/26*
U.S. Cl. 250—492 A 18 Claims

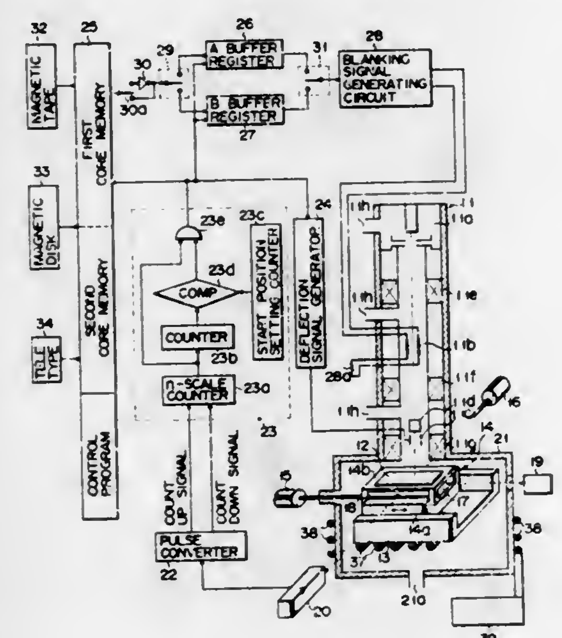

1. A radiant beam exposure apparatus for forming a desired pattern on a workpiece by means of a radiant beam comprising
a radiant beam gum for projecting a radiant beam onto the workpiece;
a carriage for supporting the workpiece in the directions X and Y which intersect at a right angle;
a carriage movement detector for detecting the movement of the carriage to generate a pulse signal which corresponds to the amount and speed of the carriage movement;
a memory device for storing information corresponding to the desired pattern and for reading out the information in response to the pulse signal from the carriage movement detector;
a blanking signal generator for generating, in response to the information read out from the memory device, a blanking signal which corresponds to the information;
a blanking means for blanking the radiant beam in response to the blanking signal;
a deflection signal generator for generating a deflection signal in responsive to the pulse signal from the carriage movement detector;
deflection means for deflecting the radiant beam in response to the deflection signal from the deflection signal generator; and
a thermostatic device for maintaining the carriage and the workpiece at a substantially constant temperature and having means for permitting flow of a liquid kept at a substantially constant temperature with a deviation of about 0.1° C.

4,063,104
SCANNING X-RAY MACHINE ARRANGEMENT
Norman Arthur Gadd, Taplow, England, assignor to EMI Limited, Middlesex, England
Filed Mar. 19, 1976, Ser. No. 668,519
Claims priority, application United Kingdom, Mar. 21, 1975, 11850/75
Int. Cl.[2] A61B *6/02*; H01J *35/16*
U.S. Cl. 250—523 9 Claims

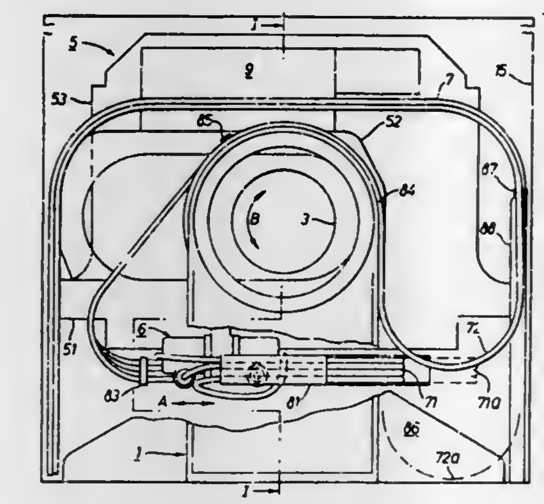

1. In a scanning X-ray machine in which an X-ray source is supported inside a machine cover for scanning movement to direct radiation along substantially coplanar paths in various directions and has at least one flexible connection between movable and fixed machine parts, a connection handling arrangement including guide means to form at least one guided loop extending unsupported within the machine cover of each flexible connection, said guide means having a connection guide which is movable with the source and to which said connection is attached to take in and return said connection from and to said loop with movement of the source.

4,063,105
METHOD OF AND APPARATUS FOR GENERATING TUNABLE COHERENT RADIATION BY NONCOLLINEAR PHASE-MATCHED SUM-DIFFERENCE FREQUENCY OPTICAL MIXING
Roshan L. Aggarwal, Burlington; Neville K. S. Lee, Framingham, and Benjamin Lax, Chestnut Hill, all of Mass., assignors to Massachusetts Institutes of Technology, Cambridge, Mass.
Filed June 24, 1976, Ser. No. 699,557
Int. Cl.[2] H02M *5/04*
U.S. Cl. 307—88.3 18 Claims

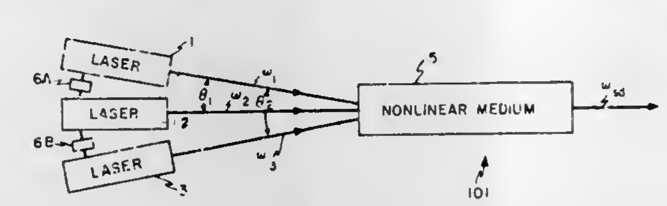

3. Apparatus for generating tunable coherent radiation at a frequency ω_{sd} by noncollinear nonlinear four-photon sum-difference frequency optical mixing, that comprises: means generating a first laser beam, a second laser beam, and a third laser beam of frequencies ω_1, ω_2 and ω_3, respectively, so that $\omega_{sd} = \omega_1 + \omega_2 - \omega_3$; a nonlinear medium positioned to receive the beams which are directed upon the nonlinear medium in a noncollinear configuration to generate the sum-difference frequency radiation as an output from the nonlinear medium, said nonlinear medium having a third order nonlinearity; the first beam being directed upon the nonlinear medium, the second and third beams being directed at certain angles to the first beam and to at least a substantial part of the same portion of the nonlinear medium excited by the first beam, the beams being mixed in said portion of nonlinear medium to provide said sum-difference frequency ω_{sd}, and means adjusting the angle between the first and second beams as well as the angle between the first and third beams to achieve the phase matching necessary for efficient generation of the radiation at the said sum-difference frequency ω_{sd}.

4,063,106
OPTICAL FIBER RAMAN OSCILLATOR
Arthur Ashkin, Rumson; Ravinder Kumar Jain, Matawan; Chinlon Lin, Middletown, and Rogers Hall Stolen, Rumson, all of N.J., assignors to Bell Telephone Laboratories, Incorporated, Murray Hill, N.J.
Filed Apr. 25, 1977, Ser. No. 790,192
Int. Cl.[2] H03F *7/00*
U.S. Cl. 307—88.3 13 Claims

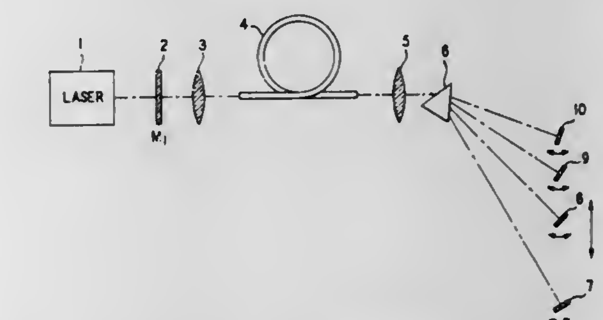

1. A Raman oscillator having a pump laser for generating a coherent optical pump beam and a multifrequency Raman oscillator cavity for generating Stokes radiation at at least two frequencies in response to said coherent optical pump beam, said cavity comprising:
an optical fiber having optical waveguiding properties at the wavelengths of said optical pump beam and of said Stokes radiation,
means for focusing radiation into said fiber and for collimating radiation emitting from said fiber, and
means for selectively resonating simultaneously in said optical fiber radiation of at least two frequencies, whereby Stokes radiation of at least two frequencies is generated in said optical fiber and resonated in said multifrequency oscillator cavity.

4,063,107
METHOD AND APPARATUS FOR PRODUCING INTERFERENCE-FREE PULSES
Gunter Hartig, Hansastrasse 29, 7500 Karlsruhe 21, Germany
Division of Ser. No. 418,794, Nov. 23, 1973, abandoned. This application June 11, 1975, Ser. No. 585,902
Claims priority, application Switzerland, Dec. 5, 1972, 17686/72
Int. Cl.[2] H03K *3/00*
U.S. Cl. 307—106 20 Claims

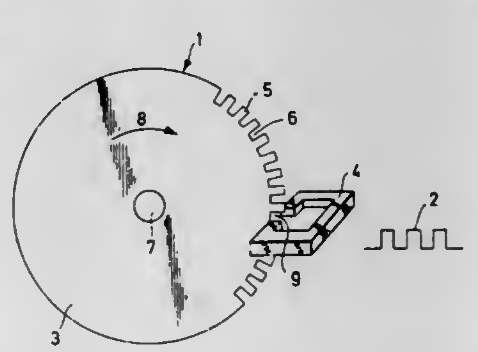

1. Method of inductively producing interference-free electrical pulses comprising the following steps:
a. strengthening or weakening periodically the flux of a magnetic field within a gap by moving past or through said magnetic field a member of a material which is able to strengthen or weaken a magnetic field,
b. modulating said magnetic field within said gap with a carrier frequency voltage,

c. inducing a voltage in each of at least two induction elements by said magnetic field so that said voltage in each of said induction elements has a frequency being identical with said carrier frequency and has an amount which varies according to the variations of said magnetic field caused by said member, said voltages further being phase shifted relative to each other due to spatial displacement of said two induction elements relative to each other in the direction of the movement of said member,

d. comparing the phase of the voltage difference of said two voltages with the phase of said carrier frequency voltage so that there are by phase sorting obtained two pulse sequences which are synchronized relative to each other such that the interference-affected regions of one of said pulse sequences occur at the same time as interference-free regions of the other of said pulse sequences, and vice versa,

e. and controlling by said pulse sequences the level of an output value which is variable between two levels, said controlling is made such that the first change of level in an interference-affected region of one of said pulse sequences which takes place during an interference-free region of the other of said pulse sequences effects a change in the level of that output value, and said changed output value is maintained during the interference-free region of said other pulse sequence irrespectively of other changes of level in the interference-affected region of said one pulse sequence, and vice versa.

4,063,108

INVERTER LOCKOUT CIRCUIT

Keith Karl Klett, 203 E. 13th St., and Robert Philbrick Alley, 9 Laurel Drive, both of Danville, Ill. 61832

Filed Jan. 2, 1976, Ser. No. 646,009

Int. Cl.² H02J *9/00*

U.S. Cl. 307—64 **16 Claims**

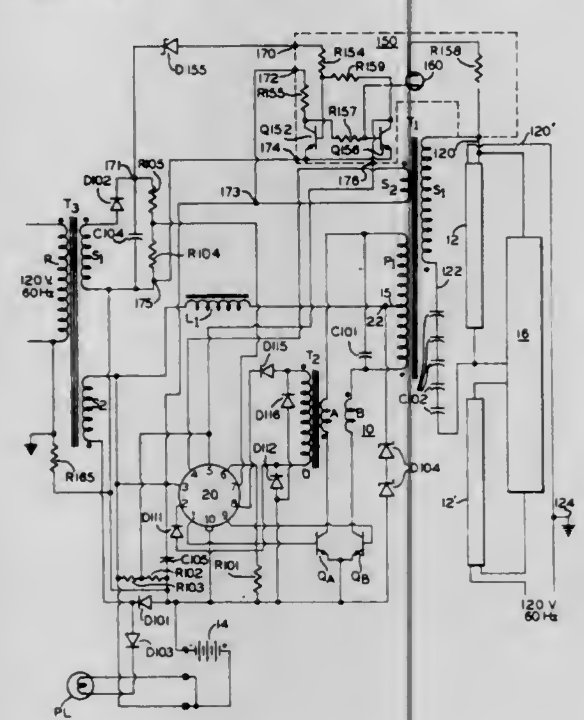

1. In a circuit having an inverter including an output for operating at least one gaseous discharge lamp from a DC electrical energy source, the improvement comprising:

means for shutting down inverter operation including means responsive to placing the output in an unloaded condition by at least partial removal of said at least one gaseous discharge lamp from the circuit when the inverter is operating.

4,063,109

CLOCK PULSE SYSTEM

Jacobus van der Mark, Beekbergen, Netherlands, assignor to U.S. Philips Corporation, New York, N.Y.

Continuation of Ser. No. 585,958, June 11, 1975, abandoned. This application Dec. 2, 1976, Ser. No. 746,956

Claims priority, application Netherlands, June 24, 1974, 7408437

Int. Cl.² H03K *3/00*

U.S. Cl. 307—106 **5 Claims**

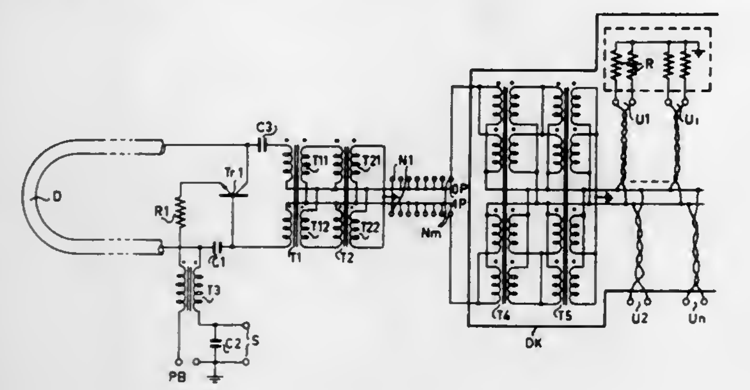

1. A clock pulse system for generating and distributing two clocks pulse signals which are symmetrical and shifted in time with respect to each other, comprising

a pulse source;

a current source which can be switched on and off by said pulse source, comprising control means having electrodes, said pulse source being reactively coupled between said electrodes of said control means; and

a delay line arranged to be floating with respect to a fixed potential, connected to said current source; the ends of said delay line being connected to said electrodes.

4,063,110

SECURITY DEVICE

Michael B. Glick, 2865 Turk Blvd., San Francisco, Calif. 94118

Filed Jan. 12, 1976, Ser. No. 648,459

Int. Cl.² H01H *19/04*

U.S. Cl. 307—112 **4 Claims**

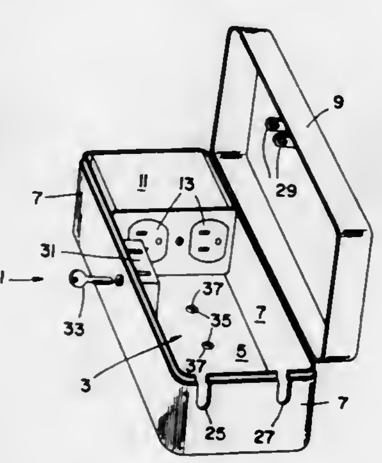

1. A security device comprising a rigid container having a bottom wall portion, a plurality of contiguous side wall portions and a hinged top portion having complementary locking fingers thereon, all of said portions bounding a hollow interior with a key operated lock fixed to the interior of one of said side wall portions; said hinged top portion being moveable between a closed position and an open position away from said hollow interior; a plug receiving station having two plug receiving apertures fixedly secured within said hollow interior, and being connected to a power supply by an electrical cord passing through an opening formed within one of said side wall portions; two slots formed in the side wall portion opposite to said side wall portion having the opening formed therein, and in alignment with said two plug receiving apertures, whereby when a plug of an electrical appliance is inserted in either or both of said apertures, a cord attached to said plug will pass through the aligned slot to enable said hinged top portion to be moved to the closed position and move said complementary locking fingers into said key operated lock to releasably capture said plug within said hollow interior.

4,063,111

SOLID STATE TOUCH SWITCH

Steve Dobler, 166-36 20 Road, Whitestone, N.Y. 11357; Christian Grund, 4219 Wickham Ave., Bronx, N.Y. 10466, and Robert Fondiller, 200 W. 58th St., New York, N.Y. 10019

Filed Nov. 3, 1975, Ser. No. 627,973

Int. Cl.² H03K *13/00*

U.S. Cl. 307—116 **2 Claims**

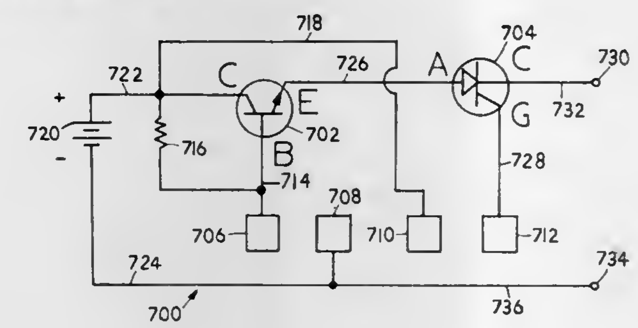

1. A touch-on, touch-off solid state switch comprising a case, a first pair of contacts mounted on said case, a second pair of contacts mounted on said case, a pair of switch terminals mounted on said case, transistor means having an on-state an an off-state mounted in said case, silicon controlled rectifier means having an on-state and an off-state mounted in said case, a direct current power source mounted in said case and circuit connection means connecting said first pair of contacts, said second pair of contacts, said pair of switchterminals, said transistor means, said silicon controlled rectifier means and said direct current power source, with said silicon controlled rectifier means in a normally off, non-conducting, state and with said transistor means held in a normally on, conducting, state by said circuit connection means causing the application of positive voltage to the base of said transistor means from said direct current power sources and with said circuit connection means connecting a first contact of said first set of contacts to said direct current power source and connecting a second contact of said first pair of contacts to the gate of said silicon controlled rectifier means for application of a positive voltage to said gate responsive to a user placing a finger across said first set of contacts, turning said silicon controlled rectifier means, on with said circuit connection means providing a current path passing through said silicon controlled rectifier means and passing through said transistor means from said switch terminals to said direct current power source and, with said circuit connecttion means causing the base of said transistor means to receive negative voltage causing it to turn off, and interrupt said current pathresponsive to a user placing a finger across said second set of contacts.

4,063,112

INDUCTION MOTOR LOAD MONITOR AND CONTROL APPARATUS

Robert Francis Dumbeck, 104 Anderson Drive, Elgin, Tex. 78621

Continuation-in-part of Ser. No. 548,011, Feb. 7, 1975, abandoned. This application Apr. 12, 1976, Ser. No. 675,780

Int. Cl.² G08B *21/00*

U.S. Cl. 307—116 **20 Claims**

12. The combination of: drive means whose speed varies with load, means operable from rotation of said drive means producing repetitive signal pulses each derived in response to a predetermined measure interval of rotation of said drive means and load determining means determining from said signal pulses, signal pulses of variable duration having a duration identifying speed of said drive means and thereby signifying the load.

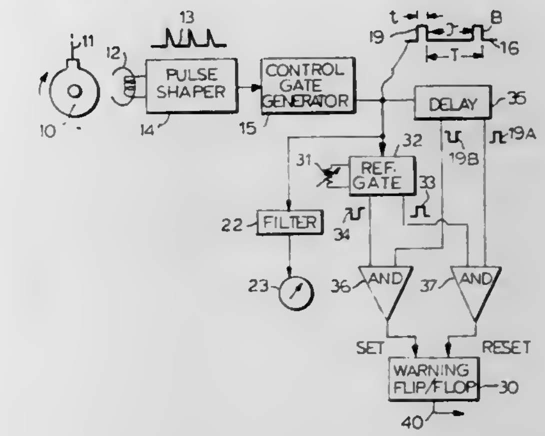

4,063,113

LOGIC TRANSFER CIRCUIT EMPLOYING MOS TRANSISTORS

Alexander Douglas Odell, Great Dunmow, England, assignor to International Standard Electric Corporation, New York, N.Y.

Filed June 14, 1976, Ser. No. 696,166

Claims priority, application United Kingdom, Aug. 19, 1975, 34407/75

Int. Cl.² H03K *19/08, 19/20, 3/353;* **G11C** *19/00*

U.S. Cl. 307—205 **9 Claims**

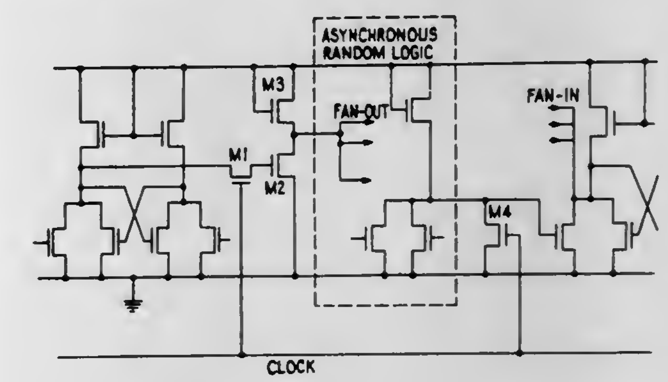

1. A logic transfer circuit including at least two switching devices controlled by a single phase clock, comprising:

a first switching device;

a second switching device;

means for applying a single phase clock pulse waveform to said first and second switching devices for simultaneously switching said first and second switching devices;

at least one logic input storage device;

means for coupling an input logic signal to said logic input storage device via said first switching device when said first switching device is conducting, said storage device maintaining an input level transferred thereto during any one conducting period of said transfer circuit throughout the next non-conducting period when said storage device is isolated from said logic input;

logic output means controlled by said storage device and clamped by said second switching device such that if any change occurs in the input level during any one of said non-conducting periods, said output means is clamped at the pre-change level until the next non-conducting period; and

asynchronous logic means coupled between said first and second switching devices.

4,063,114
DYNAMIC DIVIDER CIRCUIT
Shinji Morozumi, Shimosuwa, Japan, assignor to Kabushiki Kaisha Suwa Seikosha, Tokyo, Japan
Filed July 8, 1975, Ser. No. 594,402
Claims priority, application Japan, July 8, 1974, 49-78104
Int. Cl.² H03K *23/08*
U.S. Cl. 307—225 C **11 Claims**

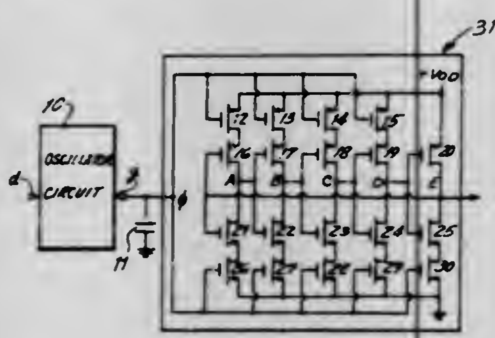

1. A dynamic divider circuit for dividing a clock signal by $n-1$, where n is an odd integer larger than 3, comprising n series-connected C-MOS inverter stages, the output of the last of said series-connected inverter stages being coupled to the input of the first of said series-connected inverter stages to define a closed loop, first switching circuit means coupled to $n-1$ inverter stages, said first switching circuit means including $n-1$ pairs of first and second complementary switching transistor means, said first and second transistor means of each said pair being series coupled to said $n-1$ C-MOS inverter stages, and second switching circuit means coupled to the remaining inverter stage, said second switching circuit means including a further switching transistor means series coupled to said remaining inverter stage in the same manner that said first transistor means of each of said $n-1$ pairs is coupled to said inverter stages, said further switching transistor means being the same type of transistor means at said first transistor switching means series coupled to said $n-1$ pairs of first switching circuit means, said first and second switching circuit means in response to said clock signal being applied thereto controlling the switching of each said inverter stage to which both said switching means are respectively coupled to produce an output signal having a frequency equal to the frequency of the clock signal divided by $n-1$ at the output of each said inverter stage.

4,063,115
SEMICONDUCTOR SWITCH
Shinzi Okuhara, Fujisawa; Yoshikazu Hosokawa, Hitachi; Tatsuya Kamei, Hitachi, and Masayoshi Suzuki, Hitachi, all of Japan, assignors to Hitachi, Ltd., Japan
Filed Sept. 3, 1976, Ser. No. 720,492
Claims priority, application Japan, Sept. 10, 1975, 50-108968
Int. Cl.² H03K *17/72*
U.S. Cl. 307—252 G **7 Claims**

1. A semiconductor switch comprising: a PNPN switch of an equivalently four-layered PNPN structure including at least three PN-junctions, an anode and a cathode; switching means including a control terminal and connected with said PNPN switch to shunt one of said three PN-junctions at either one end of said PNPN switch; amplifying means; and a capacitive element for differentiating a voltage applied between the anode and the cathode of said PNPN switch to allow a current to flow into the control terminal of said switching means through said amplifying means, so that said switching means is driven

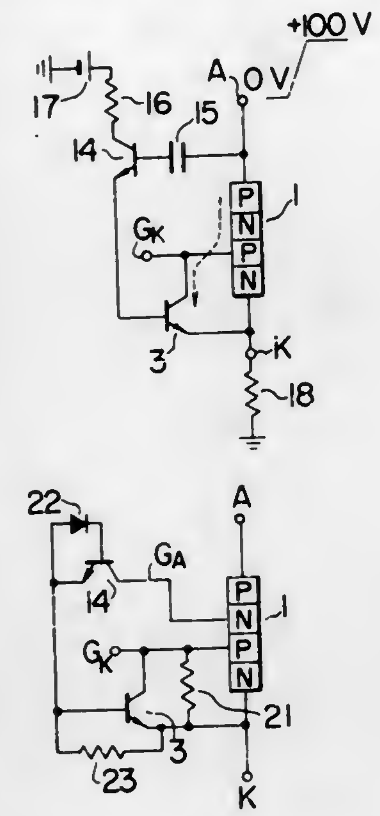

by said current thereby to short-circuit said one of three PN-junctions.

4,063,116
TEMPERATURE COMPENSATED CURRENT SOURCE
James C. Schmoock, San Jose, Calif., assignor to Raytheon Company, Lexington, Mass.
Filed Aug. 26, 1976, Ser. No. 717,975
Int. Cl.² H03K *17/00*
U.S. Cl. 307—254 **24 Claims**

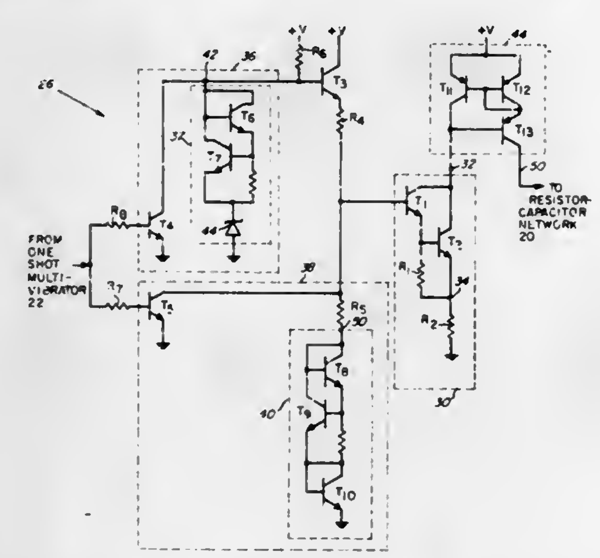

1. A temperature compensated switching circuit, comprising:

a. an emitter-follower circuit including a pair of transistors arranged in a Darlington configuration, a first one of such pair of transistors having a base electrode adapted for coupling to a source of switching signals through two electrical paths and an emitter electrode connected to the base electrode of a second one of such pair of transistors, and a resistor connected between the emitter electrode of the second one of the pair of transistors and ground;

b. a pair of input transistors disposed in corresponding ones of such paths, each one of such transistors being arranged in a grounded emitter configuration having base electrodes adapted for coupling to the source of switching signals and collector electrodes coupled to the base electrode of the first one of the pair of transistors in the Darlington configuration; and

c. means, including a pair of diode networks coupled to the collector electrodes of the pair of input transistors, for producing a voltage variation at the base electrode of the first one of the pair of transistors in the Darlington configuration which varies inversely to the temperature variation developed across the base-emitter junctions of the pair of transistors arranged in the Darlington configuration.

4,063,117
CIRCUIT FOR INCREASING THE OUTPUT CURRENT IN MOS TRANSISTORS
Ronald C. Laugesen, Sunnyvale, and Ury Priel, Cupertino, both of Calif., assignors to National Semiconductor Corporation, Santa Clara, Calif.
Filed Jan. 7, 1977, Ser. No. 757,710
Int. Cl.² H03K *17/12, 17/04, 17/28, 17/60*
U.S. Cl. 307—270 **5 Claims**

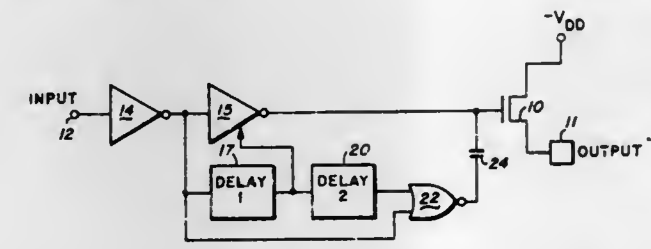

1. An output stage MOS transistor driver circuit comprising:

tri-state inverter means coupled between a source of input signal and the gate electrode of said output stage transistor, said tri-state inverter having a control electrode for rendering the inverter floating upon application of a logic zero signal condition thereto:

first delay means coupled between said source of input signal and said control electrode whereby said tri-state inverter couples said input signal from said source to said gate during the interval of said first delay;

a NOR gate having a pair of input terminals and an output terminal, one input terminal being coupled to said source of input signals; a capacitor coupled between said gate electrode and said NOR gate output electrode; and

second delay means coupled between said control electrode and the other input terminal of said NOR gate, whereby said capacitor is charged during said first delay interval and discharges into said gate electrode after said second delay interval to increase the signal drive on said gate electrode.

4,063,118
MIS DECODER PROVIDING NON-FLOATING OUTPUTS WITH SHORT ACCESS TIME
Kotaro Nishimura, Fuchu, Japan, assignor to Hitachi, Ltd., Japan
Filed May 25, 1976, Ser. No. 689,816
Claims priority, application Japan, May 28, 1975, 50-62867
Int. Cl.² H03K *19/08, 19/34;* **G11C** *8/00, 15/04*
U.S. Cl. 307—270 **7 Claims**

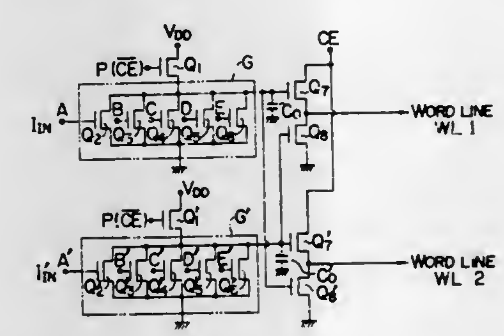

1. An MIS decoder circuit arrangement of the dynamic drive type including at least a pair of decoder circuits, each decoder circuit comprising a dynamic ratioless circuit including a first MISFET for charging a predetermined capacitor by the application of a precharge pulse to the gate thereof, a MISFET gate circuit for discharging said capacitor by the application of an address pulse in the non-selection mode, a second MISFET receiving a third pulse and the terminal voltage of said capacitor at the drain and the gate thereof, respectively, for providing an output from the source thereof, and a third MISFET having a drain connected to the source of said second MISFET and a gate applied with a voltage controlled by the terminal voltage of the capacitor for grounding the source of said second MISFET, the terminal voltages of said capacitors in the respective decoder circuits being supplied to the gates of the third MISFETs of different decoder circuits.

4,063,119
SCHMITT TRIGGER CIRCUIT
Alexander D. Odell, Great Dunmow; John M. Young, and Kenneth A. M. Arton, both of Harlow, all of England, assignors to International Standard Electric Corporation, New York, N.Y.
Filed Sept. 22, 1976, Ser. No. 725,209
Claims priority, application United Kingdom, Sept. 25, 1975, 39281/75
Int. Cl.² H03K *3/286, 3/295, 3/353*
U.S. Cl. 307—279 **2 Claims**

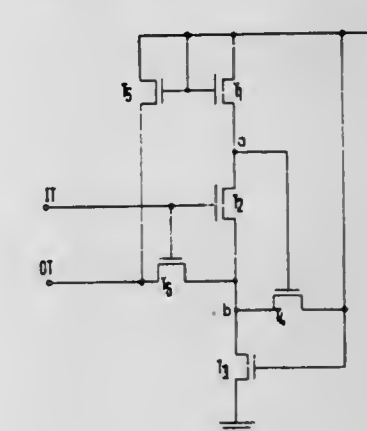

1. A Schmitt trigger circuit comprising a power supply terminal, a reference terminal, a signal input terminal, a signal output terminal, a first MOS transistor, a second MOS transistor; and a third MOS transistor having their source-drain paths series connected between said power supply terminal and said reference terminal, the gates of said first and third MOS transistors being connected to said power supply terminal and the gate of said second MOS transistor being connected to said input terminal; a fourth MOS transistor having its source-drain path connected between said power supply terminal, and the common point between said second MOS transistor and said third MOS transistor, the gate of said fourth MOS transistor being connected to the common point between said first MOS transistor and said second MOS transistor, a fifth MOS transistor and a sixth MOS transistor having their source-drain paths series connected between said power supply terminal and the common point between said second MOS transistor and said third MOS transistor, the gate of said fifth MOS transistor being connected to said power supply terminal, the gate of said sixth MOS transistor being connected to said signal input terminal, and said signal output terminal being connected to the common point between said fifth MOS transistor and said sixth MOS transistor.

4,063,120
CONSTANT VOLTAGE CIRCUIT
Gijun Idei, Yokohama, Japan, assignor to Tokyo Shibaura Electric Co., Ltd., Tokyo, Japan
Filed Aug. 10, 1976, Ser. No. 713,243
Claims priority, application Japan, Aug. 12, 1975, 50-97985
Int. Cl.² H03K *17/00*
U.S. Cl. 307—297 **37 Claims**

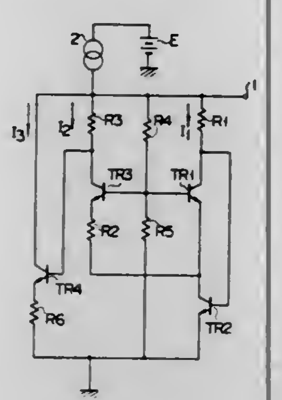

1. A constant voltage circuit comprising first and second circuit terminals; a first transistor of one conductivity type having a collector coupled to said first circuit terminal; a second transistor of said one conductivity type having a collector and base respectively coupled to the emitter and collector of said first transistor and an emitter coupled to said second circuit terminal; a third transistor of said one conductivity type having a base and emitter respectively coupled to the base and emitter of said first transistor and a collector coupled to said first circuit terminal; a fourth transistor of said one conductivity type having a base coupled to the collector of said third transistor and a collector and emitter respectively coupled to said first and second circuit terminals; and bias means for applying a bias voltage to the bases of said first and third transistors.

4,063,121
INPUT CONVERTER
Peter G. Bartlett, Davenport, Iowa, assignor to Automation Systems Inc., Eldridge, Iowa
Filed July 22, 1976, Ser. No. 707,630
Int. Cl.² H03K *3/26*
U.S. Cl. 307—311 **12 Claims**

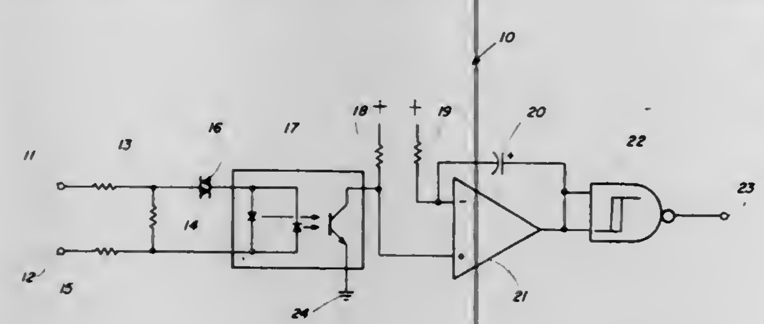

1. An input signal converter comprising:
1. an input coupled from an input signal source;
2. light emitting means coupled to said input for producing light in response to input signals;
3. a light sensitive semiconductor device positioned adjacent said light emitting means;
4. an amplifier having a low voltage, current sensitive, low impendance input connected in shunt across said light sensitive device; and
5. a constant current source supplying current to the shunted pair of said light sensitive device and said amplifier input.

4,063,122
ROTOR CONTAINING A FIELD WINDING COOLED TO A LOW TEMPERATURE
Dieter Kullmann, Langenzenn, and Lutz Intichar, Nurenberg, both of Germany, assignors to Siemens Aktiengesellschaft, Berlin and Munich, Germany
Filed Apr. 10, 1975, Ser. No. 566,839
Claims priority, application Germany, Apr. 16, 1974, 2418260
Int. Cl.² H02K *3/24*
U.S. Cl. 310—64 **7 Claims**

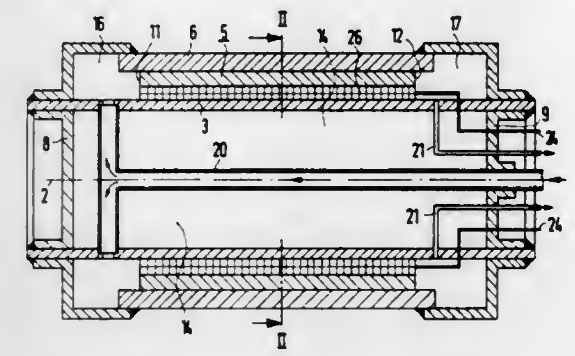

1. A rotor for an electric machine such as a synchronous machine containing a field winding which is cooled to a low temperature comprising:
a. an inner cylinder made of a non-magnetic material;
b. a hollow cylindrical support body made of a non-magnetic material containing on its inside a plurality of internal slots, said cylindrical support body concentrically surrounding and being in close contact with said inner cylinder;
c. a plurality of field windings disposed in the slots of said support body;
d. means at each end of said rotor defining a pressure tight space between said inner cylinder and said support body which spaces are in communication with said internal slots; and
e. means for supplying a cooling medium to the space at one end of said rotor and means for removing cooling medium at low temperature from the space at the other end of said rotor whereby said cooling medium will be conducted from one end of said rotor to an other end of said rotor past said field windings.

4,063,123
ROTOR WINDING IMPROVEMENT
John Addison Herr, Garwood, and Wolfgang Jaffe, Roselle Park, both of N.J., assignors to The Singer Company, New York, N.Y.
Continuation-in-part of Ser. No. 453,738, March 22, 1974, abandoned. This application June 25, 1975, Ser. No. 590,246
Int. Cl.² H02K *3/46*
U.S. Cl. 310—270 **12 Claims**

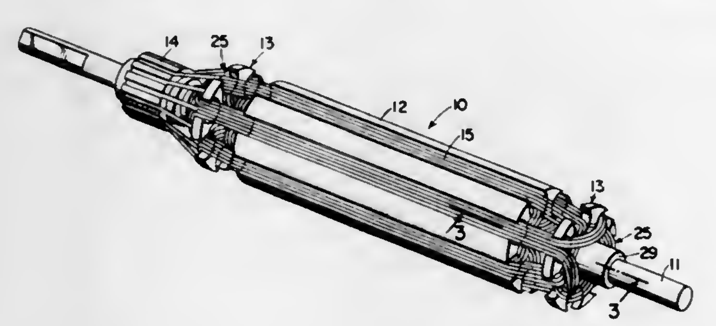

1. A rotor for an electromechanical device including a cylindrical core formed with lengthwise exterior slots, said slots having a least radial dimension, electrically conductive wire wound in said slots, said electrically conductive wire forming end windings at the ends of said cylindrical core by progressing from one slot to another slot separated therefrom by at least one intervening slot, at least one winding guide disc arranged in axially spaced relation beyond each of the ends of

said cylindrical core, each of said discs having substantially the same circular dimensions as said cylindrical core and having a plurality of circumferentially open apertures equal in number and substantially aligned with said slots, a portion of said end windings being accommodated in the space between said cylindrical core and said winding guide discs up to no more than said least radial dimension of said slots, a remaining portion of said end windings being accommodated at the opposite end of said winding guide discs from said cylindrical core by passing from one aperture aligned with said one slot to another aperture aligned with said another slot, said one aperture being separated from said another aperture by at least one intervening aperture aligned with said intervening slot, whereby said end windings by being axially distributed beyond said cylindrical core by said winding guide discs are accommodated within the circular dimension of said core.

4,063,124
ROTATING ANODE FOR X-RAY TUBES
Günter Appelt, Erlangen, Germany, assignor to Siemens Aktiengesellschaft, Berlin & Munich, Germany
Filed Jan. 28, 1977, Ser. No. 763,430
Claims priority, application Germany, Mar. 6, 1976, 2613060
Int. Cl.² H01J *35/10*
U.S. Cl. 313—60 **7 Claims**

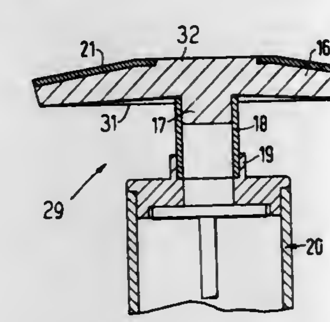

1. In an improved rotating anode assembly for an X-ray tube such rotating anode assembly being one of the type which includes an anode plate member and a cylindrical rotor means therefor, such rotor means having (a) an axis, (b) means responsive to circumferentially applied electromagnetic force causing said rotor means to rotate about such axis, and (c) bearing means functionally associated therewith and adapting said rotor means for rotational movements relative to said bearing means, said bearing means including contact portions for applying during such rotational movements an electron accelerating potential to said plate member, the improvement which comprises the combination of
A. a shaft axially extending from one end of said rotor means and terminating forwardly in a tubular configuration, said shaft being rotationally associated with said rotor means and rotatable therewith,
B. said plate member having a generally disc-shaped body and being coaxial with said axis, said plate member having radially tapered surface portions on one face thereof adjacent the circumferential periphery of said plate member, said surface portions being adapted to convert incident electron energy striking same in an axially parallel direction into X-ray energy emitted therefrom at a predetermined angle relative to said incident electron energy, and further having an axial projection extending from the opposed face thereof,
C. said tubular configuration having an inside diameter ranging from about 2 to 0.8 times the axial length of said axial projection,
D. said axial projection being shrink fitted into said tubular configuration.

4,063,125
HIGH-FREQUENCY FOCUSING DEVICE FOR FOCUSING A BEAM OF CHARGED PARTICLES ACCELERATED WITHIN A CYCLOTRON
Duc Tien Tran; Jacques Kervizic, and Bernard Hurt, all of Paris, France, assignors to C.G.R.-MeV, Paris, France
Filed June 28, 1976, Ser. No. 700,156
Claims priority, application France, July 1, 1975, 75.20647
Int. Cl.² H05H *13/00*
U.S. Cl. 313—62 **7 Claims**

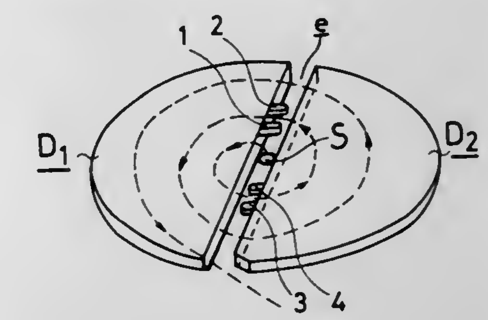

1. A high-frequency focusing device for a beam of charged particles accelerated in an accelerator of cyclotron type, said accelerator comprising a particle source, at least two accelerating electrodes or "Dee's" provided with two plates parallel to the plane of the trajectory followed by said beam and arranged between the pole pieces of an electro-magnet furnishing a magnetic field of a predetermined value, means for creating a high-frequency electric field between said electrodes, said high-frequency focusing device comprising at least one pair of metal focusing electrodes attached to one of the "Dee's" in the neighbourhood of said source, said focusing electrodes projecting into the accelerator space defined between the "Dee's", said focusing electrodes being arranged in such a manner that they are disposed to either side of one of the approximately circular trajectories followed by the particle beam during the course of one of it's first revolutions.

4,063,126
VACUUM ARC DISCHARGE DEVICE WITH TAPERED ROD ELECTRODES
Joseph A. Rich, and Willem F. Westendorp, both of Schenectady, N.Y., assignors to General Electric Company, Schenectady, N.Y.
Filed Feb. 16, 1977, Ser. No. 769,275
Int. Cl.² H01J *17/26*
U.S. Cl. 313—146 **17 Claims**

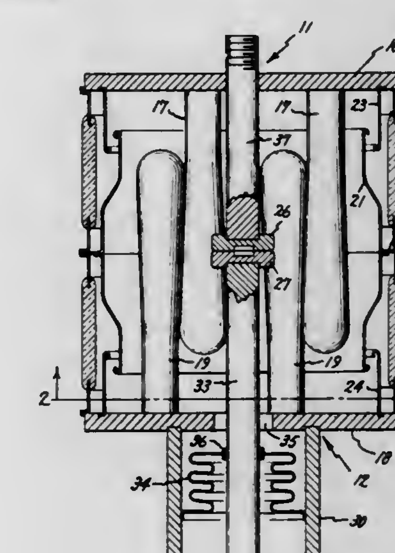

1. A vacuum arc discharge device comprising:
a hermetically sealed, evacuated envelope having first and second opposed, conductive end walls;
a first plurality of electrically conducting rods contained in

said envelope, each rod of said first plurality being mechanically and electrically coupled to said first conductive end wall;

a second plurality of electrically conducting rods contained in said envelope, each rod of said second plurality being mechanically and electrically coupled to said second conductive end wall, the rods of said second plurality being interdigitally spaced in alternating fashion with respect to said first plurality of rods;

each rod of said first and second pluralities being tapered along at least the arcing surfaces of longitudinally overlapped portions thereof, each rod of said first and second pluralities exhibiting an increasing diameter toward the free end and terminating the substantially hemispherical surface; and

means within said envelope coupled to said first conductive end wall for initiating an arc discharge in the vicinity of said rods.

4,063,127

OVERLOAD PROTECTION TUBE

Yves Dominique Le Cain, Le Chesnay; Ali Nagati, Massy, and Bruno A. F. Pellet, Levallois, all of France, assignors to International Standard Electric Corporation, New York, N.Y.

Filed June 21, 1976, Ser. No. 698,393

Int. Cl.[2] H01J *17/00, 21/00*

U.S. Cl. 313—325 7 Claims

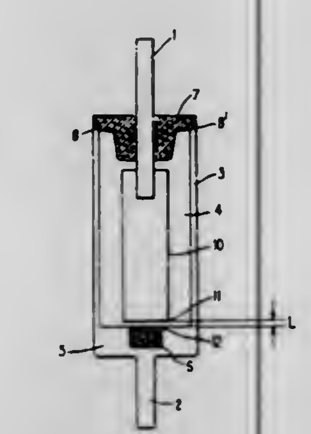

1. An overload protection discharge tube comprising an enclosure, an opening in the enclosure, a first electrode extending through said opening and having a first discharge surface inside said enclosure, a plug between said first electrode and said enclosure to hermetically seal said opening onto said first electrode, a second electrode having a second discharge surface inside said enclosure facing said first discharge surface and being separated from said first discharge surface by a discharge gap, and a gas atmosphere filling said enclosure at a pressure lower than atmospheric pressure, wherein said plug is comprised of a material which will soften at a temperature lower than the softening temperatures of the other portions of said discharge tube to enable the atmospheric pressure to drive said first electrode until said first discharge surface comes in contact with said second discharge surface, when said discharge tube is overheated due to abnormal operating conditions.

4,063,128

CATHODE SUPPORT STRUCTURE FOR COLOR PICTURE TUBE GUNS TO EQUALIZE CUTOFF RELATION DURING WARM-UP

Richard Henry Hughes, Lancaster, Pa., assignor to RCA Corporation, New York, N.Y.

Filed July 2, 1976, Ser. No. 702,010

Int. Cl.[2] H01J *29/02, 29/50*

U.S. Cl. 313—409 6 Claims

1. In an electron gun assembly having a center cathode disposed between two outer cathodes in substantially co-planar relationship therewith, each of which is supported at a predetermined nominal spacing from a common control grid by a separate cathode support, wherein each spacing varies as a function of temperature of the respective cathode support and one of said cathode supports stabilizes at a higher operating

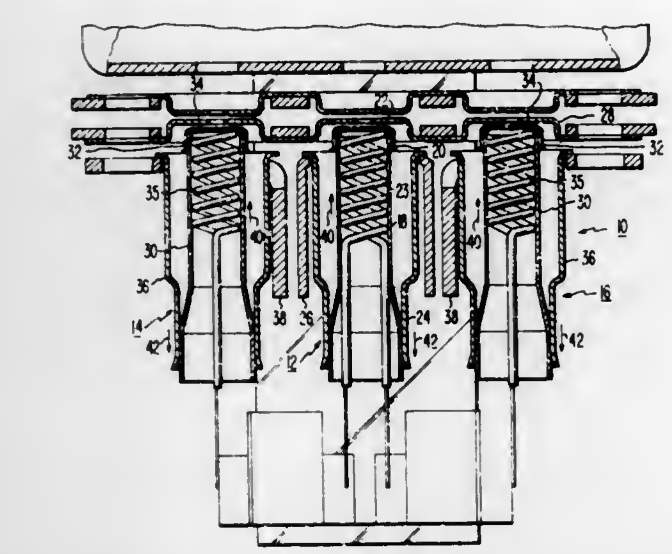

temperature than the other cathode supports, the improvement comprising means for maintaining said temperature dependent variations in said spacings substantially equal from cathode to cathode.

4,063,129

MAGNETRON HAVING IMPROVED MAGNETIC FIELD DISTRIBUTION IN THE INTERACTION SPACE AND ONE STRAP OF MAGNETIC AND ELECTRICAL CONDUCTIVE MATERIAL

Hiroshi Miura, Tokyo, and Norio Tashiro, Yokohama, both of Japan, assignors to Tokyo Shibaura Electric Co., Ltd., Japan

Filed Apr. 26, 1976, Ser. No. 680,441

Claims priority, application Japan, Apr. 25, 1975, 50-50347

Int. Cl.[2] H01J *25/50*

U.S. Cl. 315—39.71 6 Claims

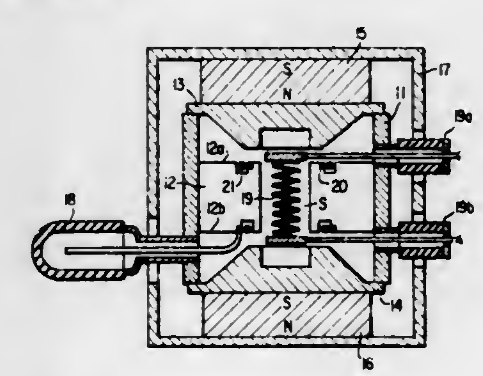

1. A magnetron comprising:

an anode cylinder,

a plurality of inwardly projecting spaced radial vanes defining resonant cavities therebetween within the cylinder,

a concentrically positioned cathode within the cylinder spaced from the ends of the vanes defining an interaction space between the cathode and the vanes, the cathode emitting electrons into the interaction space,

a plurality of straps at least one of which is comprised of magnetic and electrically conductive material coupling alternate ones of the vanes at their ends adjacent the cathode to maintain equal RF potentials on alternate vanes, and

magnetic field generating means for inducing a magnetic field in the axial direction of the cylinder in the interaction space,

whereby the magnetic field distribution in the interaction space is aligned substantially parallel to the axial direction.

4,063,130

LOW IMPEDANCE ELECTRON-BEAM CONTROLLED DISCHARGE SWITCHING SYSTEM

Robert O. Hunter, Jr., c/o Physics Department, University of California, Irvine, Calif. 92664

Filed Feb. 4, 1976, Ser. No. 655,235

Int. Cl.[2] H05B *41/02, 41/36*

U.S. Cl. 315—150 24 Claims

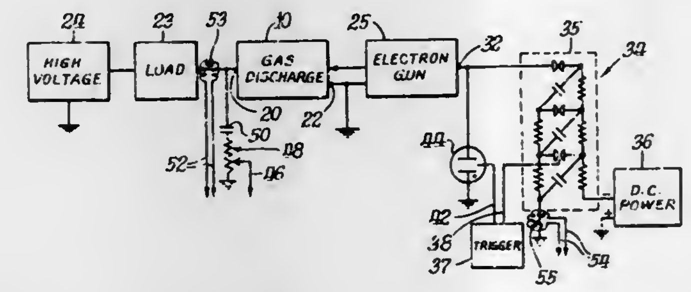

1. A high-voltage switching system for switching large load currents in short periods comprising

an envelope,

gas contained within said envelope at a pressure of the order of magnitude of at least 0.1 atmosphere,

said gas providing a relatively high electron drift velocity at relatively low electric field intensity,

first and second terminals external to said envelope for connection in a switching circuit,

first and second electrodes spaced apart within said envelope and connected to said first and second terminals, respectively, the electric field intensity between said electrodes so spaced being insufficient at rated voltage to produce any substantial secondary ionization of the gas,

an electron beam generator for introducing a beam of high energy electrons into said gas through said envelope to ionize said gas, and

means for turning said beam on or off.

4,063,131

SLOW RISE TIME WRITE PULSE FOR GAS DISCHARGE DEVICE

John W. V. Miller, Toledo, Ohio, assignor to Owens-Illinois, Inc., Toledo, Ohio

Filed Jan. 16, 1976, Ser. No. 649,828

Int. Cl.[2] H05B *41/14*

U.S. Cl. 315—169 TV 13 Claims

1. In an operating system for a multicelled gas discharge display/memory device, said device including a pair of opposed electrode arrays with proximate electrode portions of at least one electrode in each array defining the cells; an ionizable gas volume between the spaced electrode portions of each cell; a dielectric charge storage member in contact with the gas insulating at least one electrode portion of each cell from the gas; a sustainer voltage source connected across each cell to cyclically impose an alternating voltage having a period; pulser means for generating write and erase voltage pulses to manipulate the discharge state of individual cells between an "on state" and an "off state"; and keyer pulser means for generating a steeply rising leading edge on the write and erase voltage pulses, the improvement comprising: said dielectric charge storage member formed from a low operating voltage material and means for turning off said keyer pulser means during the generation of said write voltage pulses to form a relatively

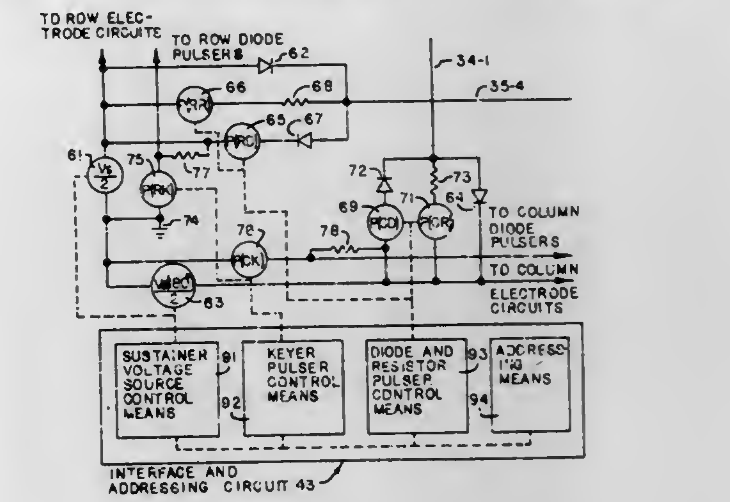

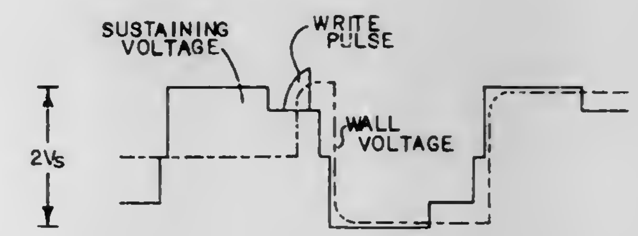

slow rise time leading edge on said write voltage pulses whereby crosstalk between adjacent cells is reduced.

4,063,132

DC POWERED MICROWAVE DISCHARGE IN AN ELECTRODELESS LIGHT SOURCE

Joseph M. Proud, Wellesley Hills, Mass.; Richard A. Bessett, Derry, N.H., and William H. McNeill, Carlisle, Mass., assignors to GTE Laboratories Inc., Waltham, Mass.

Filed Aug. 4, 1976, Ser. No. 711,743

Int. Cl.[2] H05B *41/16, 41/24*

U.S. Cl. 315—248 6 Claims

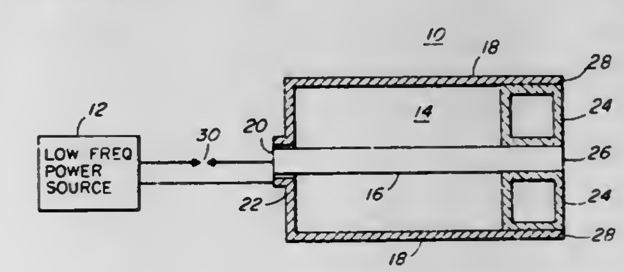

1. A light source comprising:

a. a low frequency power source,

b. a resonant device having an inner conductor and an outer conductor disposed around the inner conductor, the conductors having first ends coupled to the power source,

c. an electrodeless lamp having an envelope made of a light-transmitting material and a fill material which emits light upon breakdown and excitation, the lamp being disposed at a second end of the conductors in the region therebetween, the fill material, in response to a low frequency electrical field build-up to a predetermined level, breaking down to produce repetitive exponentially damped bursts of radio frequency oscillations of current within the fill material to produce light, and

d. means external to the device for rapidly charging the resonant device.

4,063,133
HORIZONTAL DEFLECTION CIRCUIT WITH TIMING CORRECTION
Leroy William Nero, and Ronald Eugene Fernsler, both of Indianapolis, Ind., assignors to RCA Corporation, New York, N.Y.
Filed Nov. 19, 1976, Ser. No. 743,313
Int. Cl.² H01J *29/56*
U.S. Cl. 315—370 8 Claims

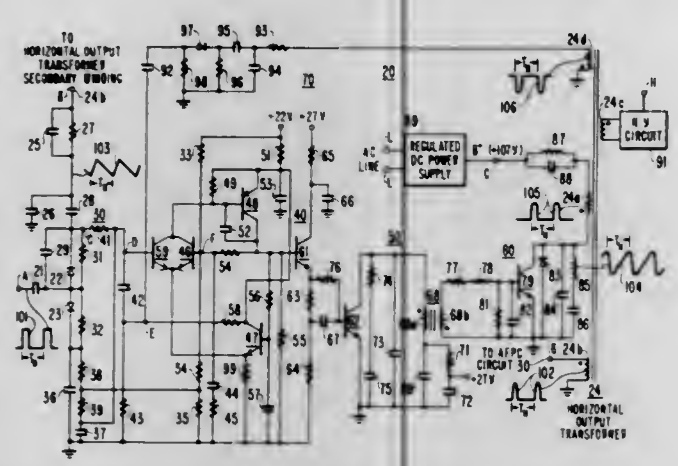

1. A deflection circuit for generating deflection current in synchronization with synchronizing signals, comprising:
a deflection winding;
output deflection means coupled to said deflection winding and responsive to driving signals for generating said deflection current in said deflection winding during each deflection cycle, including means for generating retrace signals indicative of the initiation of the retrace interval in said deflection cycle;
oscillator and driver means coupled to said output deflection means and responsive to control and correction signals for generating said driving signals at predetermined instants in said deflection cycle;
synchronization means coupled to said oscillator and driver means and responsive to said synchronizing signals and said retrace signals for providing said control signals to said oscillator and driver means for synchronizing said deflection current with said synchronizing signals; and
correction means coupled to said oscillator and driver means for providing said correction signals to said oscillator and driver means for correcting for variations in initiation of said retrace interval that are not adjusted by said synchronizing means, said correction means comprising:
sawtooth generating means responsive to said retrace signals for providing a sawtooth voltage;
a peak separator coupled to said sawtooth means for providing voltage pulses during a peak voltage excursion of said sawtooth voltage; and
means for coupling said voltage pulses to said oscillator and driver means for providing said correction signals.

4,063,134
RASTER DISTORTION CORRECTION CIRCUIT
Mikio Iida, Tokyo, Japan, assignor to Sony Corporation, Tokyo, Japan
Filed May 19, 1976, Ser. No. 687,655
Claims priority, application Japan, May 22, 1975, 50-69040
Int. Cl.² H01J *29/56*
U.S. Cl. 315—371 14 Claims

1. For use with a cathode ray tube of the type having trapezoidal distortion of the raster caused by beam mislanding correction means adapted to correct for beam mislanding caused by the magnetic field of the earth, a raster distortion correction circuit for correcting both pincushion distortion and said trapezoidal distortion of said raster, comprising:
means for supplying a periodic parabolic signal having a parabolic waveform and a frequency equal to the vertical deflection frequency of said cathode ray tube;
means for supplying plural periodic sawtooth signal components, each having a sawtooth waveform and a frequency equal to said vertical deflection frequency of said cathode ray tube;
adjusting means for receiving said sawtooth signal components and producing an output sawtooth signal as a function of said supplied sawtooth signal components, said output sawtooth signal having adjustable amplitude and polarity for correcting said trapezoidal distortion caused by said beam mislanding correction means;

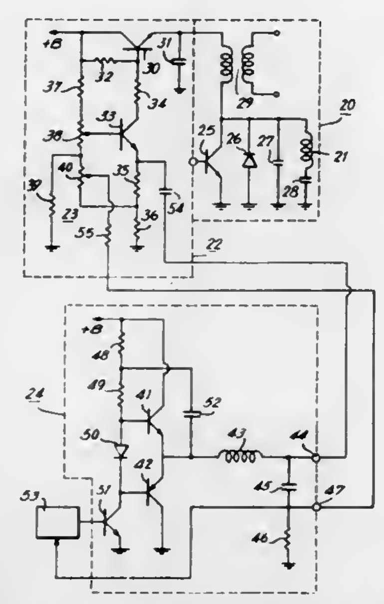

a horizontal deflection circuit including a horizontal deflection coil for passing a horizontal deflecting current through said horizontal deflection coil at the horizontal deflection frequency of said cathode ray tube; and
modulating means for receiving both said parabolic signal and said output sawtooth signal to modulate said horizontal deflecting current therewith, whereby said parabolic signal corrects said pincushion distortion and said adjusted sawtooth signal corrects said trapezoidal distortion.

4,063,135
ELECTRIC MOTOR HAVING CONTROLLED MAGNETIC FLUX DENSITY
Cravens L. Wanlass, Santa Ana, Calif., assignor to Cravens Research Company, Santa Ana, Calif.
Filed July 21, 1975, Ser. No. 597,529
Int. Cl.² H02P *1/44*
U.S. Cl. 318—220 A 24 Claims

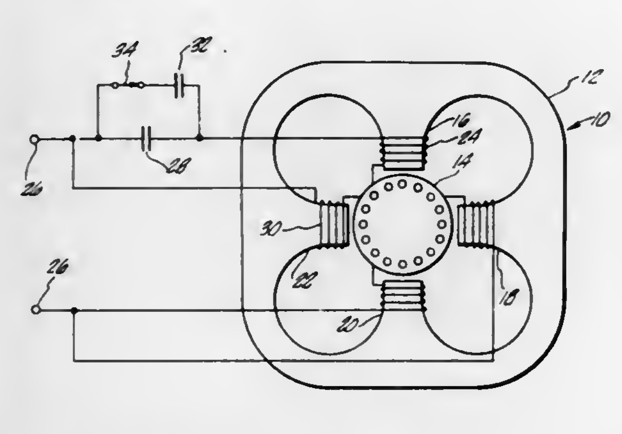

1. An electric motor comprising:
a stator including magnetic material;
a rotor;
a main stator winding encompassing the magnetic material;
an input adapted to be connected to a source of AC voltage including an inverter;
a capacitor; and
means connecting the main stator winding and the capacitor in a series circuit across said input, said capacitor having a capacitance large enough to maintain a non-inductive power factor in said series circuit in the operating mode, and being capable of storing a voltage sufficient, together with a voltage applied to said input, to cause said magnetic material to periodically change from a non-saturated to a saturated condition.

4,063,136
METHOD AND CONTROL DEVICE FOR THE SERIES AND PARALLEL COUPLING OF ELEMENTS OF AN ELECTROCHEMICAL GENERATOR SUPPLYING A MOTOR
Jean Cadiou, Paris, France, assignor to Societe Anonyme Automobiles Citroen, Paris, France
Filed Sept. 18, 1973, Ser. No. 398,381
Claims priority, application France, Sept. 21, 1972, 72.33404
Int. Cl.² H02P *7/06*
U.S. Cl. 318—139 20 Claims

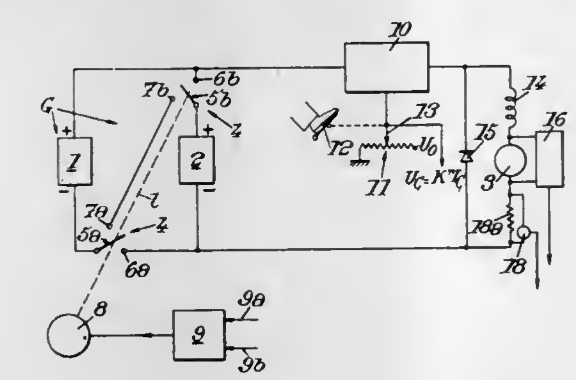

1. Method for modifying the coupling of elements of an electrochemical generator for supplying a continuous current motor, comprising using commutating means enabling, according to the conditions of operation, the coupling of at least two groups of elements of the generator, either in parallel or in series, and actuating the commutating means as a function of at least one of the parameters of the power demanded at the motor, in such a way that whatever the rotary speed of the motor, parallel coupling is effected in all cases where the power demanded can be supplied by this coupling.

4,063,137
ELECTRIC BRAKING APPARATUS FOR ALTERNATING CURRENT MOTORS
Susumu Hoshimi, Yokohama, and Toshio Sato, Zama, both of Japan, assignors to Sony Corporation, Tokyo, Japan
Filed Mar. 1, 1976, Ser. No. 662,951
Claims priority, application Japan, Mar. 5, 1975, 50-26778
Int. Cl.² H02P *3/20*
U.S. Cl. 318—212 3 Claims

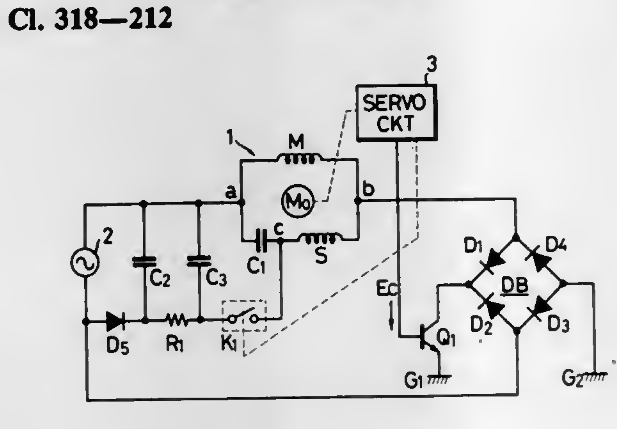

1. An electric braking apparatus for alternating current electric motors comprising:
a. a motor circuit having, a first winding and a series circuit consisting of a second winding and a capacitor, the series circuit being connected in parallel to said first winding;
b. an a.c. power source for applying a.c. to said motor circuit;
c. a diode bridge circuit connected between said motor circuit and said a.c. power source;
d. a variable impedance means connected to said diode bridge circuit so as to be in the path of the full cycle of the current applied to said motor circuit;
e. a servo circuit for detecting the rotation of said motor to produce a control signal in response to said rotation, said control signal being supplied to said variable impedance means so as to control the impedance value thereof;
f. a rectifier circuit connected to said a.c. power source for producing a d.c. voltage;
g. a smoothing circuit connected to said rectifier circuit for smoothing an output of said rectifier circuit; and
h. a switching circuit connected to said smoothing circuit for selectively applying the rectified smoothed output voltage therefrom to at least one of said windings to brake said motor, said switching circuit including at least a semiconductive device having first, second and third electrodes, said first and second electrodes being connected in series with said smoothing circuit and said at least one winding, and said third electrode being supplied with a braking signal to place said semiconductive device in the ON state.

4,063,138
DRIVE CIRCUIT FOR PULSE SYNCHRONIZED MOTOR
Osamu Maida, Tokyo, Japan, assignor to Nippon Kogaku K.K., Tokyo, Japan
Filed Nov. 24, 1975, Ser. No. 634,334
Int. Cl.² H02P *5/00*
U.S. Cl. 318—318 17 Claims

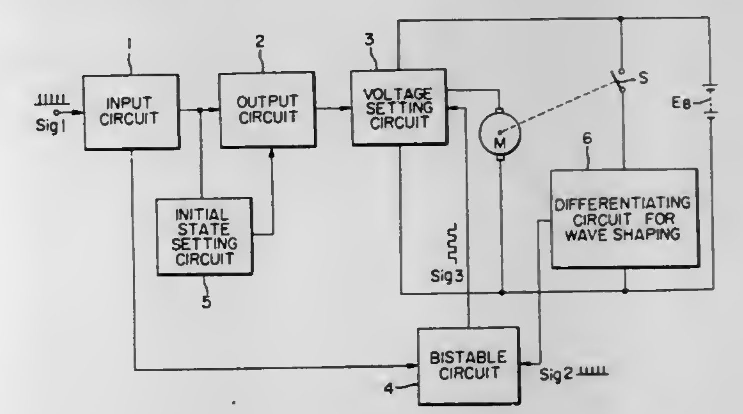

1. A drive circuit for a pulse synchronized motor for controlling the rotational speed of the motor in response to a synchronizing pulse signal instructing the rotational speed of the motor, comprising:
a circuit for detecting the rotational speed of the motor and for generating a periodic pulse signal proportional thereto;
a circuit responsive to the synchronizing pulse signal for automatically producing in accordance with the frequency of the synchronizing pulse signal a DC voltage applied to the motor having a voltage value at which the motor can be in synchronization with the rotational speed instructed by the synchronizing pulse signal; and
a bistable circuit for interrupting application of said voltage to the motor, the bistable circuit being placed in one of its states by the synchronizing pulse signal and being placed in its other state by the motor speed pulse signal.

4,063,139
TAPE DRIVE MOTOR CONTROL CIRCUIT
Donald E. Miller, Waynesboro, Va., assignor to General Electric Company, Waynesboro, Va.
Filed Apr. 14, 1975, Ser. No. 567,913
Int. Cl.² B65H *23/20;* H02P *5/00*
U.S. Cl. 318—331 21 Claims

1. A tape drive comprising a source of a constant first reference voltage of predetermined amplitude, a winding reel, a direct current winding reel motor for driving said winding reel, a winding motor armature current regulator, a direct current capstan motor, a capstan motor armature counter electromotive force regulator, said capstan regulator respon-

sive to said reference voltage for driving said capstan motor at a substantially constant speed and in a first direction, and said

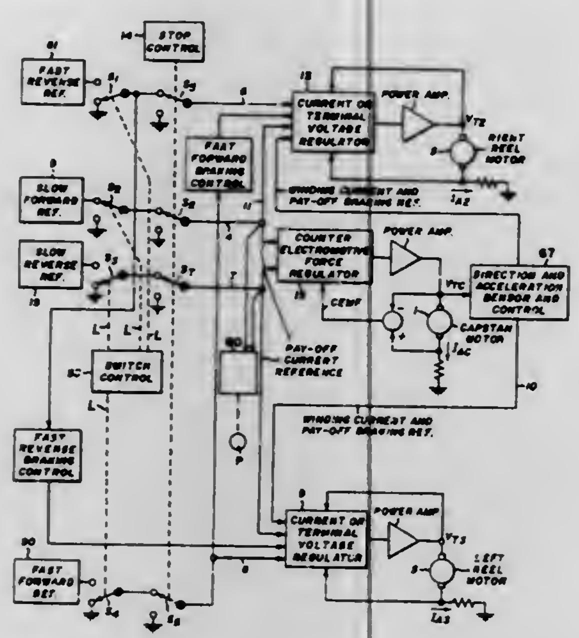

winding motor regulator responsive to the terminal voltage of said capstan motor for controlling the winding torque exerted by said winding reel motor on said winding reel.

4,063,140
METHOD AND APPARATUS FOR LIMITING POSITION SERVO AUTHORITY
Leo P. Kammerer; Gordon R. Fabian, and Roger D. Burns, all of Cedar Rapids, Iowa, assignors to Rockwell International Corporation, El Segundo, Calif.
Filed Feb. 5, 1976, Ser. No. 655,653
Int. Cl.² G05B *13/00*
U.S. Cl. 318—561 **10 Claims**

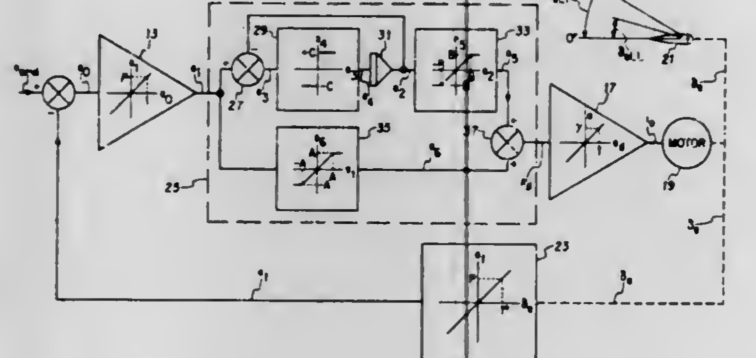

1. For use in a closed loop position servo system having input control signal S_I, feedback signal S_P, a signal S_C indicative of a comparison between S_I and S_P, and an electromechanical actuator driven by an energizing signal S_E, apparatus for limiting the authority of said actuator and having S_C as input and providing S_E as output, said apparatus comprising (i) first circuit means for providing a first component of S_E wherein said first component is limited to a first predetermined constant value, (ii) second circuit means for providing a second component of S_E wherein said second component is permitted to increase with time at least up to a second predetermined constant value, and (iii) third circuit means for combining said first and second components of S_E.

4,063,141
LINEAR D.C. DRIVE CIRCUIT
Seymour Levine, Huntington, N.Y., assignor to Sperry Rand Corporation, New York, N.Y.
Filed Apr. 19, 1976, Ser. No. 677,993
Int. Cl.² B64C *17/02*
U.S. Cl. 318—648 **6 Claims**

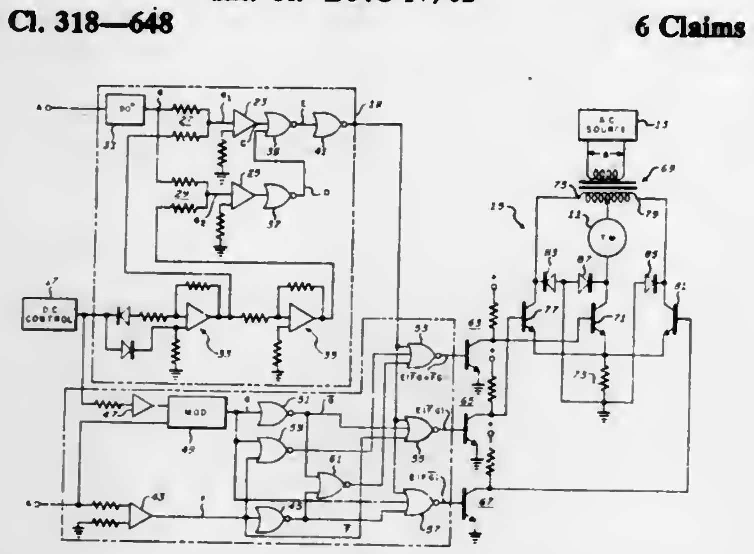

1. Apparatus for driving a d.c. load from a sinusoidal a.c. source in accordance with a d.c. control signal comprising:
- a transformer for coupling energy from said a.c. source to the load;
- pulse width modulating means including means to produce a sinusoidal signal in quadrature with a signal from said a.c. source, means to produce first and second offset signals equal to the instantaneous sum and difference, respectively, of said quadrature and said d.c. control signals, means to produce a variable duration d.c. voltage when and only when said first and second offset signals are of opposite polarity with respect to the zero axis of said quadrature signal;
- switching means including forward and reverse transistor means connected to pass energizing current from said transformer through said load in forward and reverse directions, respectively; and
- steering means for applying said variable duration d.c. voltages to said forward transistor means in response to a d.c. control signal of one polarity and to said reverse transistor means in response to a d.c. control signal of the opposite polarity;
- said forward and reverse transistor means being constructed and arranged to saturate throughout the occurrence of an applied variable duration d.c. voltage.

4,063,142
SERVO SYSTEM FOR TRIP RECORDER
Manfred Sieber, Villingen; Manfred Fichter, Weiler, and Ingo Müller, Schwenningen, all of Germany, assignors to Kienzle Apparate GmbH, Villingen-Schwenningen, Germany
Continuation of Ser. No. 118,070, Feb. 23, 1971, abandoned. This application May 16, 1975, Ser. No. 577,996
Claims priority, application Germany, Feb. 24, 1970, 2008403
Int. Cl.² G01P *3/46*; G05F *1/00*
U.S. Cl. 318—678 **5 Claims**

1. A servo system for vehicle trip recorders, comprising, in combination, first signal generating means for providing a first signal dependent upon the speed of the vehicle; second signal generating means for providing a second signal dependent upon the indicated speed; operational amplifier circuit means having differential input means connected with said first and second signal generating means and having output means and operative for producing at said output means output signals dependent upon the difference between said first and second signals, said operational amplifier circuit means including negative-feedback means connecting said output means to said input means for establishing a preselected relationship between said output signal and said first and second signals by feeding back to said input means feedback signals having a preselected relationship to said output signals; a servomotor for operating indicating means and having two motor terminals; control circuit means comprising supply lines for connection with an electrical supply and further comprising first and second push-pull output stages connected to said output means of said operational amplifier circuit means and to said servo motor for controlling operation of the latter in dependence on said output signals, said push-pull output stages each comprising two complementary-symmetry transistors whose emitters are connected with each other and with one of said motor terminals, and whose collectors are connected with respective ones of said supply lines, the voltages at the bases of said complementary-symmetry transistors being a function of the magnitude

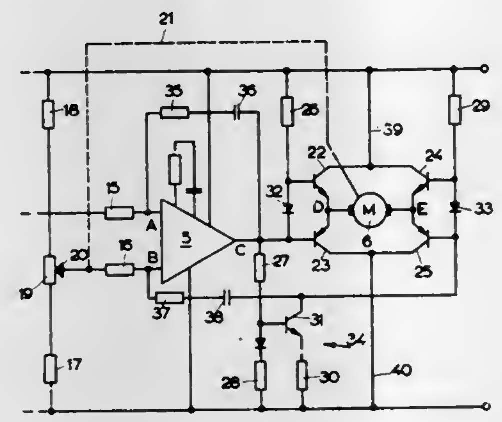

and sign of said output signals and determining the direction of current flow into and out of said motor terminals; first and second voltage dividers connected between two voltages, the bases of the two transistors of each push-pull output stage being connected with one of said first and second voltage dividers to form an electrical bridge composed of said first and second voltage dividers and of the four said transistors, said transistors composing the diagonal of said bridge; and diode means connected in series in each of said first and second voltage dividers, each of said diode means being connected between the bases of the two transistors of the respective output stage for compensating the threshold voltage of the base-emitter diodes of said two transistors.

4,063,143
INVERTER ARRANGEMENT WITH TWO CONTROLLED THREE-PHASE INVERTERS
Wilhelm Forstbauer, Erlangen, Germany, assignor to Siemens Aktiengesellschaft, Berlin and Munich, Germany
Filed Sept. 11, 1975, Ser. No. 612,455
Claims priority, application Germany, Sept. 30, 1974, 2446635
Int. Cl.² H02P *13/20*
U.S. Cl. 363—40 **5 Claims**

1. An inverter arrangement for use with a DC voltage source comprising:
- a first inverter having an input adapted to be connected to said DC source, exactly six main valves arranged in a first three-phase bridge arrangement, and first quenching devices for quenching said first main valves, and said first inverter providing a first three-phase system of inverter output voltages which are each of a rectangular waveshape and are phase-shifted by 120° el relative to each other;
- a second inverter having an input adapted to be connected to said DC source, exactly six main valves arranged in a second three-phase bridge arrangement, and second quenching devices for quenching said second main valves, said second inverter providing a second three-phase system of inverter output voltages which are phase-shifted, in the sense of a time lag, by 30° el and smaller in magnitude by a factor equal to $\sqrt{3}$ relative to said first system of voltages, said second system of voltages each being of rectangular waveshape and being phase-shifted by 120° el relative to each other;
- a combining means for combining said first and second systems of voltages to derive a three-phase system of resultant output voltages;
- a control unit for controlling said main valves and said quenching devices of said first and second inverters so as to fire and extinguish said main valves several times per period of said resultant voltages, and such that each of said inverter output voltages includes per period of said resultant voltages a positive voltage pulse and a negative voltage pulse which are separated from each other by a no-voltage interval of 60° el length, each of said pulses being of a 120° el length and having two no-voltage intervals whose widths are symmetrically adjustable relative to the center of the pulse and are spaced on opposite sides of said center at a distance of 30° el therefrom;
- said combining means combining one of said inverter voltages of said first system additively with a first inverter voltage of said second system, and subtractively with a second inverter voltage of said second system to generate one of said resultant voltages, said first inverter voltage being displaced 30° el relative to said one inverter voltage and said second inverter voltage being displaced 150° el relative to said one inverter voltage;

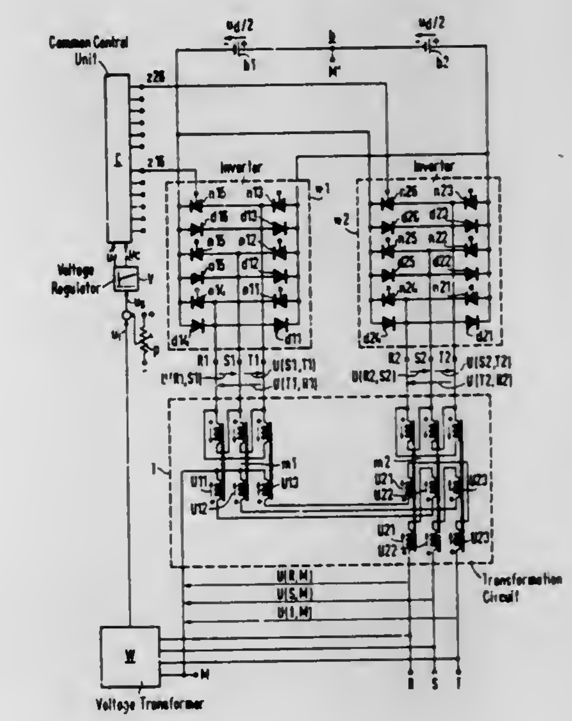

and said combining means comprising:
- a first transformer which is connected to said first inverter, said first transformer having three primary windings which are delta connected and three secondary windings, and being connected in a Dy-connection; and
- a second transformer which is connected to said second inverter, said second transformer having three primary windings which are delta connected and having six secondary windings, and being connected in a Dz-connection and having a transformation ratio which is greater than the transformation ratio of said first transformer by a factor equal to $\sqrt{3}$;
- one of said first and second transformers having an open neutral point;
- the other of said first and second transformers having its neutral point connected as a neutral terminal for said three-phase system of resultant output voltages; and
- each of said secondary windings of said first transformer being connected in series with a series connection of two of said secondary windings of said second transformer.

4,063,144

INVERTER FOR PROVIDING A SINUSODIAL OUTPUT HAVING A LOW HARMONIC CONTENT

David J. Hucker, Rockford, Ill., and Norbert L. Schmitz, Middleton, Wis., assignors to Sundstrand Corporation, Rockford, Ill.

Filed Mar. 25, 1976, Ser. No. 670,539

Int. Cl.² H02M *1/12*

U.S. Cl. 363—43 A **18 Claims**

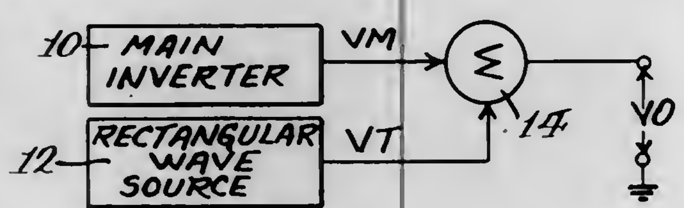

1. An inverter comprising:

means for generating an alternating stepped waveform having a magnitude which varies incrementally during each half cycle, said magnitude having a first value at the beginning and end segments of each half cycle thereof and a second value greater than said first value during a segment intermediate said beginning and end segments;

means for generating a rectangular wave, having a constant magnitude during each half cycle, in fixed phase relationship with and having a harmonic frequency greater than that of said alternating stepped waveform, the duration of the rectangular wave being shorter than the duration of the second value of the alternating stepped waveform during each half cycle of the alternating stepped waveform; and

means for summing said alternating stepped waveform and said rectangular wave to form a composite waveform approximating a sinusoidal waveform, said composite waveform having three steps in each quarter cycle thereof.

4,063,145

CIRCUIT ARRANGEMENT FOR FIRING CONTROLLED, PARALLEL-CONNECTED ELECTRIC VALVES

Karl-Friedrich Leowald, Erlangen, Germany, assignor to Siemens Aktiengesellschaft, Berlin and Munich, Germany

Filed May 6, 1976, Ser. No. 683,688

Claims priority, application Germany, May 13, 1975, 2521262; Mar. 24, 1976, 2612549

Int. Cl.² H02M *1/08*

U.S. Cl. 363—71 **6 Claims**

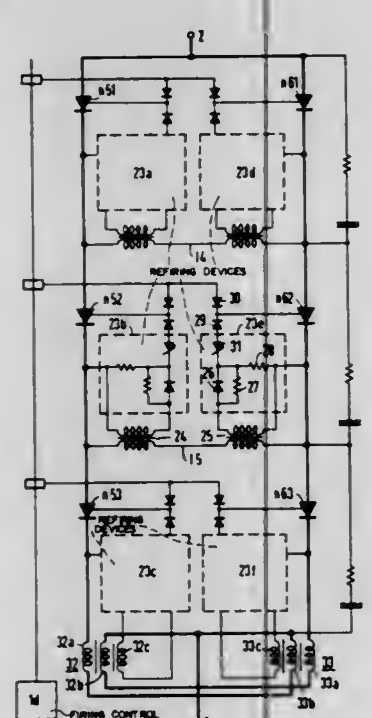

1. Apparatus for firing controllable valves disposed in parallel connected first and second valve branches, said first valve branch including at least a first valve and said second valve branch including at least a second valve, said first valve being adjacent said second valve, connected thereto via a cross lead, and having a control path adapted to receive firing pulses from a firing device, the apparatus comprising:

first means for determining the difference in load current carried by said first valve and by said second valve; said first means comprising a transformer arrangement; and

second means responsive to said first means for generating firing pulses for application to one of said first and second valves when said one valve carries a lesser amount of current than the other valve of said first and second valves and when said current difference exceeds a predetermined value, said second means including:

a series circuit comprising an ohmic resistor and a first diode;

a threshold member connected at one end to the junction point between said ohmic resistor and said diode and at the other end to said control path of said one valve;

means for connecting the secondary winding of said transformer across said series circuit; and

means for connecting the primary winding of said transformer into said cross lead.

4,063,146

DIGITAL FIRING CONTROL FOR A CONVERTER

Theodore A. Oliver, Ann Arbor, Mich., assignor to Reliance Electric Company, Cleveland, Ohio

Filed May 22, 1975, Ser. No. 579,921

Int. Cl.² H02P *7/28*

U.S. Cl. 323—4 **49 Claims**

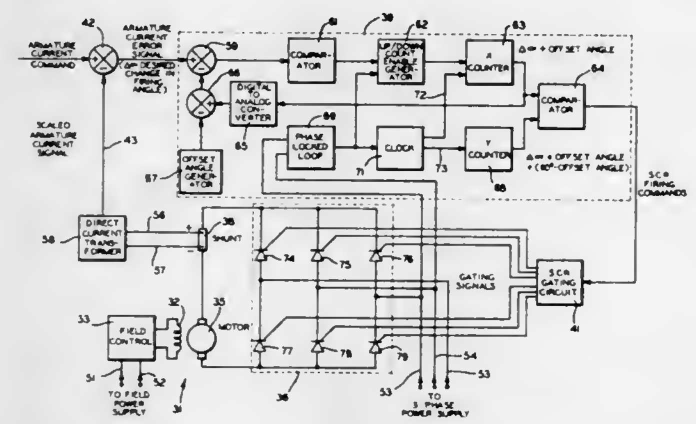

1. An apparatus for controlling the firing angle of a triggerable switch comprising:

a source of a first signal representing a desired change in the firing angle;

a source of a second signal representing said desired change in the firing angle plus the angle between firing command signals when said first signal is zero wherein said source of a second signal includes timing means for generating timing signals and counting means responsive to said timing signals for generating said second signal in digital form; and

means responsive to said first and second signals for generating said firing command signals for turning on said triggerable switch.

28. An apparatus for determining when at least one phase of a multi-phase alternating current power source is incorrectly connected to a load, comprising:

means for generating an alternating current wave form having a predetermined phase relationship with one of the phases of said power source;

means responsive to said one phase for generating at least one unipolar signal coinciding with the negative portion of said alternating current wave form when the phases of said power source are correctly connected to said load wherein said means for generating at least one unipolar signal includes means responsive to said one phase and a first pulse train of a first predetermined frequency for generating a control signal, means responsive to said control signal for generating a second pulse train of a second predetermined frequency, first frequency dividing means responsive to said second pulse train for generating said first pulse train, and second frequency dividing means responsive to said second pulse train for generating said unipolar signal; and

means responsive to said alternating current wave form and said one unipolar signal for generating an incorrect phasing signal when at least one of said phases of said power source is incorrectly connected to said load.

4,063,147

STABILIZED POWER SUPPLY CIRCUIT

Hiroshi Hatanaka, Sagamihara, and Kiyosuke Suzuki, Kitamoto, both of Japan, assignors to Sony Corporation, Tokyo, Japan

Filed Apr. 14, 1976, Ser. No. 676,911

Claims priority, application Japan, Apr. 16, 1975, 50-51735

Int. Cl.² G05F *1/56, 3/14*

U.S. Cl. 323—22 Z **3 Claims**

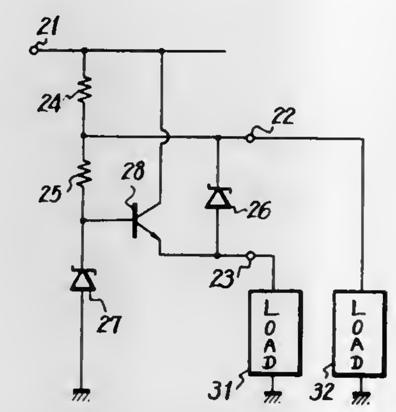

1. A stabilized power supply circuit, comprising:

a. an input terminal for receiving a DC voltage;

b. a first output terminal for supplying a first stabilized output voltage;

c. a regulator circuit connected between said input terminal and said first output terminal, said regulator circuit having a transistor with emitter and collector electrodes connected between said input terminal and said first output terminal, and a first Zener diode;

d. a second output terminal;

e. a second Zener diode connected between said first and second output terminals; and

f. a resistor connected between said input terminal and said second output terminal.

4,063,148

FIRST HOUSE PROTECTOR FOR VOLTAGE REGULATORS AND THE LIKE

Hans R. Fehlmann, Lenox, and Richard D. Blackburn, Dalton, both of Mass., assignors to General Electric Company

Filed July 1, 1976, Ser. No. 701,521

Int. Cl.² G05F *1/64*

U.S. Cl. 323—43.5 S **1 Claim**

1. A control circuit for limiting the output of voltage regulating equipment, such equipment including a drive means, said control circuit comprising:

a. means for sensing the output of voltage regulating equipment;

b. a first voltage divider fed by said sensing means;

1. said first voltage divider having means for setting a desired upper limit of the output,

c. first operating means actuated by an overvoltage from said setting means of said first voltage divider;

d. first relay means, said first relay means energized by said operating means to block further operation of the drive of the voltage regulating equipment in a direction to increase the voltage output of the voltage regulating equipment and;

e. time delay means connected to said first operating means to prevent immediate de-energization of said first relay means when said divider voltage drops below said preset limit;

f. a second operating means, said second operating means actuated by a further overvoltage from said first voltage divider, said second operating means energizing a second relay,

1. said second relay effective to cause the drive means of the voltage regulating equipment to drive the voltage regulating equipment to reduce the output voltage,

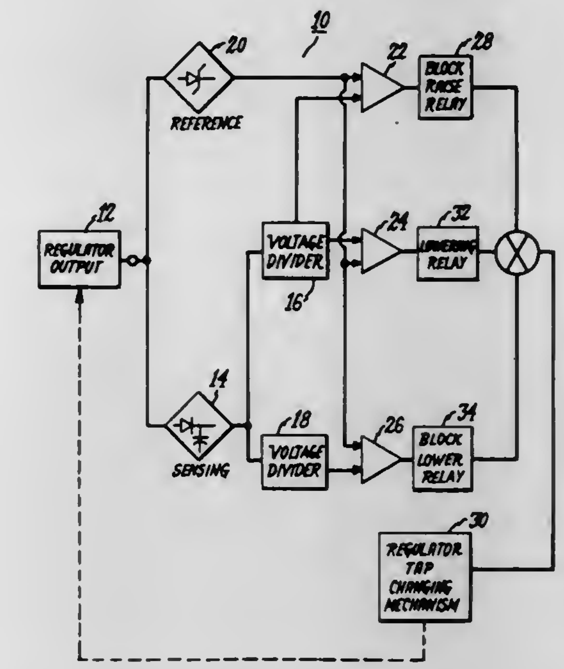

g. a second voltage divider, said second voltage divider having means for setting a desired lower limit of the output;

h. third operating means actuated by an undervoltage from said setting means of said second voltage divider;

i. and a third relay means energized by said third operating means to block further operation of the drive means of the voltage regulating equipment in a direction to lower the voltage output of the voltage regulating equipment.

4,063,149

CURRENT REGULATING CIRCUITS

Brian Crowle, Ashford, England, assignor to RCA Corporation, New York, N.Y.

Filed Jan. 7, 1976, Ser. No. 646,954

Claims priority, application United Kingdom, Feb. 24, 1975, 07658/75; July 22, 1975, 30627/75

Int. Cl.² G05F *1/56*

U.S. Cl. 323—4 **11 Claims**

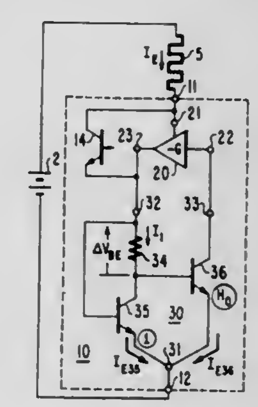

1. A current regulating circuit comprising:

a first current amplifier, having input and output circuits and exhibiting a current gain between its input and output circuits which tends to decrease exponentially with increasing current in its input circuit; and

a second current amplifier having an input circuit to which the output circuit of said first current amplifier is direct

coupled and having an output circuit direct coupled to the input circuit of said first current amplifier, thereby to form a loop connection of said first and said second current amplifiers, and exhibiting a current gain between its input and output circuits of a sense which causes said loop connection to be regenerative in nature and of an amplitude which causes current levels in the loop to tend to increase until predetermined levels are achieved whereat the current gain of the loop is reduced to unity.

4,063,150
RESONANCE THERMOMETER
Akira Ohte; Hideto Iwaoka, and Muneki Araragi, all of Musashino, Japan, assignors to Yokogawa Electric Works, Ltd., Tokyo, Japan
Filed Sept. 14, 1976, Ser. No. 723,144
Claims priority, application Japan, Sept. 17, 1975, 50-112784
Int. Cl.² G01R *33/08*
U.S. Cl. 324—.5 R **2 Claims**

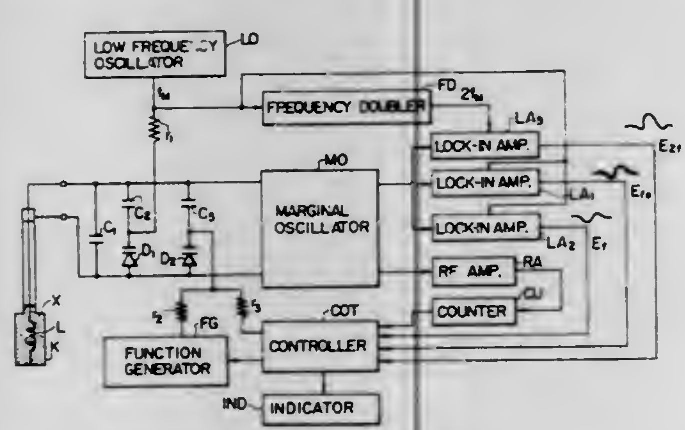

1. A resonance thermometer comprising: a temperature-responsive resonant material; a coil arranged in said resonant material; a marginal oscillator having a resonant circuit including said coil and a variable capacitance diode; a modulator means for modulating the oscillation frequency of said marginal oscillator; a first detecting means with a short time constant for detecting a component from the modulated output of said marginal oscillator; a second detecting means with a long time constant for detecting a component from the modulated output of said marginal oscillator; a function generator means for supplying said variable capacitance diode with a signal changing in the form of ramp function and for sweeping the oscillation frequency of said marginal oscillator at high speed; and means receiving from said first and second detecting means their output signals to stop the sweep of said function generator means according to the output signal of said first detecting means and to determine the resonance-absorption frequency of said resonant material according to the output of said second detecting means.

4,063,151
MICROWAVE APPARATUS AND METHOD FOR DETERMINATION OF ADSORBED FLUID IN SUBSURFACE FORMATIONS SURROUNDING A BOREHOLE
Jean A. Suau, London, England, and Rama A. Rau, League City, Tex., assignors to Schlumberger Technology Corporation, New York, N.Y.
Filed Apr. 8, 1976, Ser. No. 674,791
Int. Cl.² G01V *3/12, 3/18*
U.S. Cl. 324—6 **30 Claims**

1. Apparatus for determining the amount of adsorbed fluid in formations surrounding a borehole, comprising:
means for deriving a first quantity which is a function of the dielectric constant of said formations as measured by passing microwave electromagnetic energy of a first frequency through said formations;
means for deriving a second quantity which is a function of the dielectric constant of said formations as measured by passing microwave electromagnetic energy of a second frequency through said formations; and

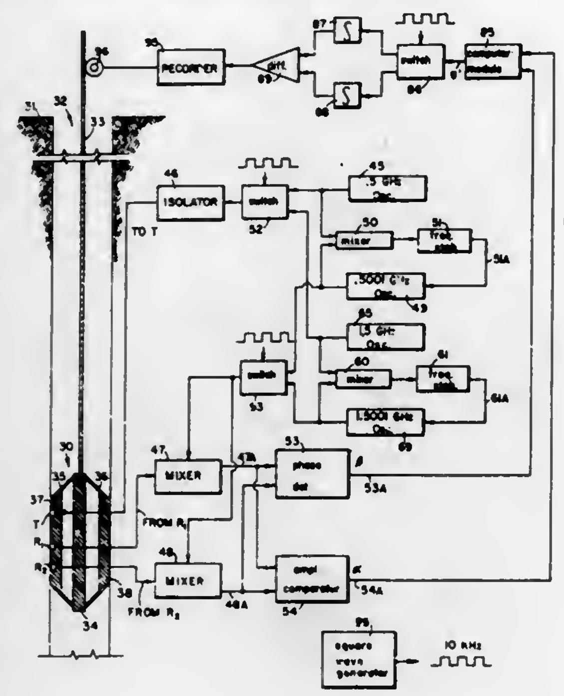

means for determining the amount of adsorbed fluid in said formations as a function of said first and second quantities.

4,063,152
METHOD AND APPARATUS FOR TIMING LIGHT CALIBRATION
George I. Reeves, Fullerton, Calif., assignor to Beckman Instruments, Inc., Fullerton, Calif.
Filed Aug. 16, 1976, Ser. No. 707,919
Int. Cl.² F02P *17/00*
U.S. Cl. 324—16 T **9 Claims**

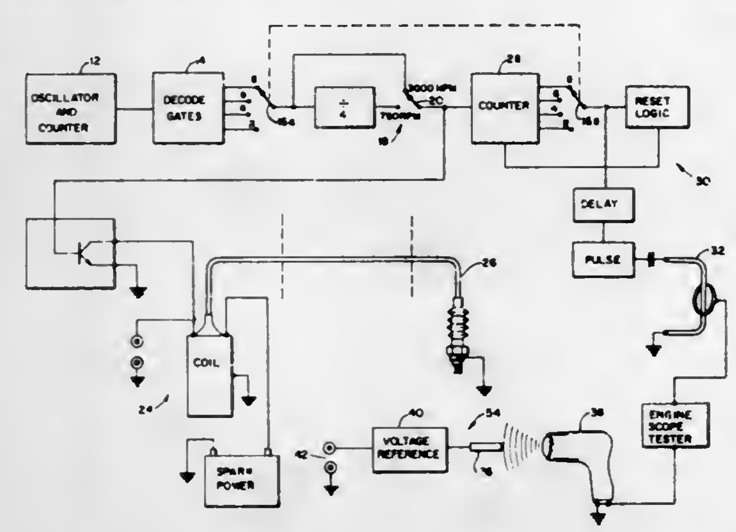

1. The method of calibrating a timing light associated with an internal combustion engine scope analyzer having a cathode ray tube with a sweep calibrated in units of engine rotation, an adjustable driver for firing the timing light offset in advance or retarded from top dead center of cylinder #1 of the engine, and a display indicating the amount of offset the timing light is being fired in advance or retarded, said method comprising the steps of:
a. detecting the fire signals from the driver to the timing light;
b. deflecting the sweep of the cathode ray tube to create a spike in response to each fire signal from the driver to the timing light;
c. adjusting the offset to the timing light to zero to create a spike at a first position;
d. adjusting the offset to the timing light to provide an offset to create a spike at a second position;
e. calculating the offset in units of engine rotation as a function of the change in position of the spike on the cathode ray tube from its first position to its second position; and,
f. adjusting the display to accurately reflect the calculated offset.

4,063,153
VAPOR LIQUID FRACTION DETERMINATION
Ronald L. Dechene, Boxford; Frank G. Grimaldi, and Robert E. Newton, both of Tewksbury, all of Mass., assignors to Auburn International, Inc., Danvers, Mass.
Filed Aug. 31, 1976, Ser. No. 719,196
Int. Cl.² G01N *27/42*
U.S. Cl. 324—30 R **11 Claims**

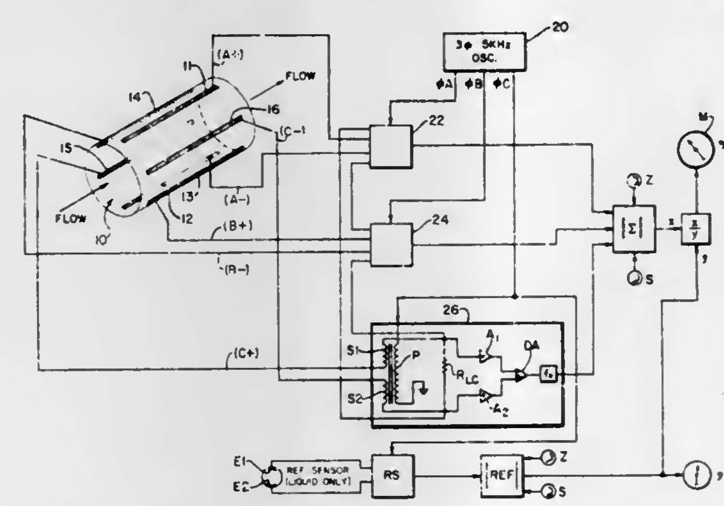

1. Method of determining liquid and vapor fractions in a non-homogeneous conductive fluid flowing through an elongated conduit with a flow axis comprising,
establishing a moving electric field vector through application of polyphase alternating electrical field excitation to the fluid by direct contact to create distributed but crossing alternating current loci across the cross section of the conduit on a cyclic repeating basis,
measuring and summing the magnitudes of such currents to produce a conductivity signal representative of the liquid and vapor fractions of fluid flowing through the conduit.

4,063,154
D. C. ELECTROMETER
Paul G. Andrus, Powell, and James M. Hardenbrook, Columbus, both of Ohio, assignors to Xerox Corporation, Stamford, Conn.
Filed Nov. 26, 1976, Ser. No. 744,912
Int. Cl.² G01R *5/28*
U.S. Cl. 324—32 **2 Claims**

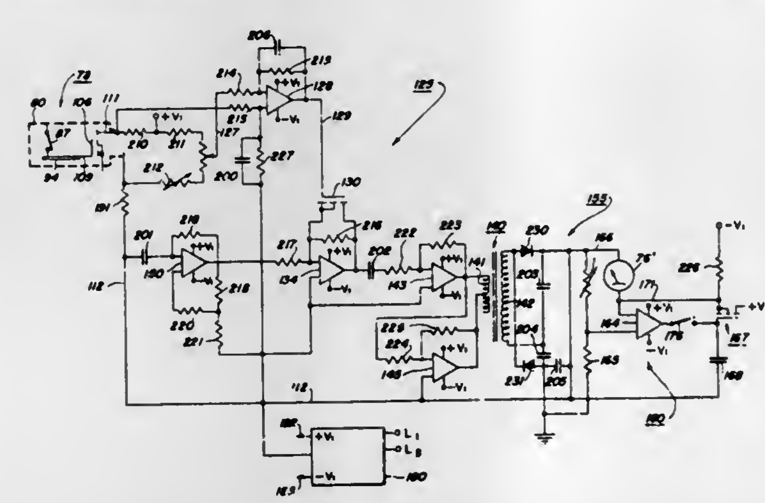

1. In a d.c. type electrostatic voltmeter for measuring charge potentials on a xerographic plate, the voltmeter including a probe to be disposed opposite the xerographic plate and is spaced relationship thereto and a housing for the probe, the combination of:
a. first control means;
b. means for applying the d.c. signal output of said probe to said first control means whereby said first control means provides a control signal proportional to said probe signal;
c. an a.c. signal source;
d. second control means for regulating the amplitude of the signal produced by said a.c. signal source in response to said control signal whereby to provide a regulated a.c. signal having an amplitude proportional to said probe signal;
e. power transformer means;
f. third control means for driving said power transformer means in response to said regulated a.c. signal:
g. means for rectifying the a.c. output of said power transformer means whereby to provide a d.c. signal having a potential substantially equal to the potential on said xerographic plate; and
h. means for applying said d.c. signal output of said rectifying means to said probe housing to null the voltage gradient between said xerographic plate and said probe housing and render said probe substantially spacing insensitive.

4,063,155
D.C. ELECTROMETER PROBE
Robert F. Buchheit, Pittsford, N.Y., assignor to Xerox Corporation, Stamford, Conn.
Filed Nov. 26, 1976, Ser. No. 744,911
Int. Cl.² G01R *5/28*
U.S. Cl. 324—32 **3 Claims**

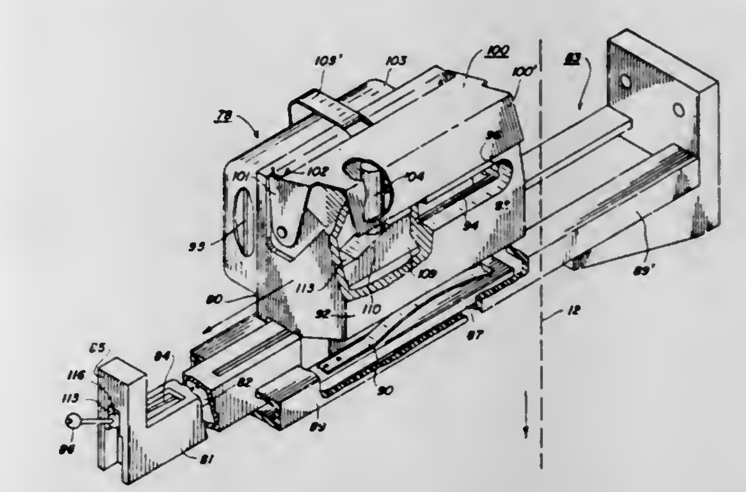

1. In an apparatus for determining voltages on a previously charged xerographic plate, the combination of:
an elongated supported member;
a housing on said support member, said housing including a wall portion having a window therein;
means mounting said support member for movement relative to said plate with said housing window facing said plate in spaced relationship thereto;
a probe disposed in said housing opposite said window, said probe generating a signal indicative of the charge on the portions of said plate opposite said probe;
a shutter on said housing for closing off said window;
means to withdraw said shutter and open said window to permit said probe to measure charges on said plate;
switch means effective when actuated to couple said probe to a known potential whereby to permit said probe to be calibrated; and
means responsive to returning of said shutter and closing of said window to actuate said switch means and calibrate said probe.

4,063,156
ASSYMETRIC CYLINDER ELECTRON CAPTURE DETECTOR
Paul Louis Patterson, Walnut Creek, Calif., assignor to Varian Associates, Inc., Palo Alto, Calif.
Filed Feb. 27, 1976, Ser. No. 662,064
Int. Cl.² G01N *27/00*
U.S. Cl. 324—33 **28 Claims**

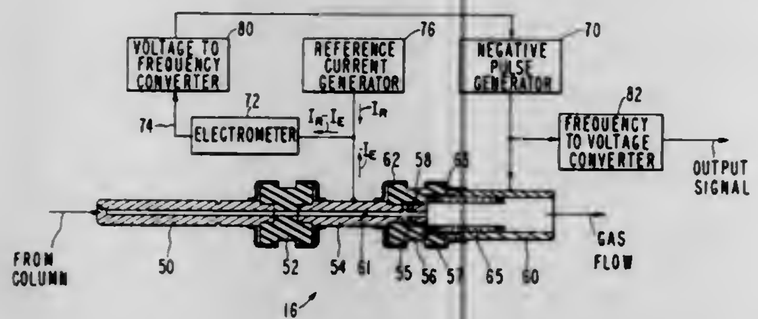

1. An electron capture detector comprising a first electrode defining an ionization volume, a collector electrode disposed externally of said ionization volume, means for allowing a gas to flow past said collector electrode into said ionization volume, means for ionizing the gas in said ionization volume, and electrical pulse generating means connected to said electrodes for causing free electrons in said ionization volume to migrate to said collector electrode during a pulse, said electrodes being coaxially disposed with respect to each other, one end of said collector electrode being spaced apart from one end of said first electrode by no more than 0.125 inch.

4,063,157
MAGNETIC TESTING DEVICE FOR INTERNAL SURFACES OF PIPE USING A MAGNETIZING MEANS AND EXPANDABLE MAGNETIZABLE MATERIAL WITHIN THE PIPE
Donald E. Lorenzi, Des Plaines; Richard C. Sabielny, McHenry, and Kenneth W. Schroeder, Arlington, all of Ill., assignors to Magnaflux Corporation, Chicago, Ill.
Continuation of Ser. No. 652,428, Jan. 26, 1976, abandoned. This application Mar. 7, 1977, Ser. No. 774,919
Int. Cl.² G01R *33/12*
U.S. Cl. 324—213 **1 Claim**

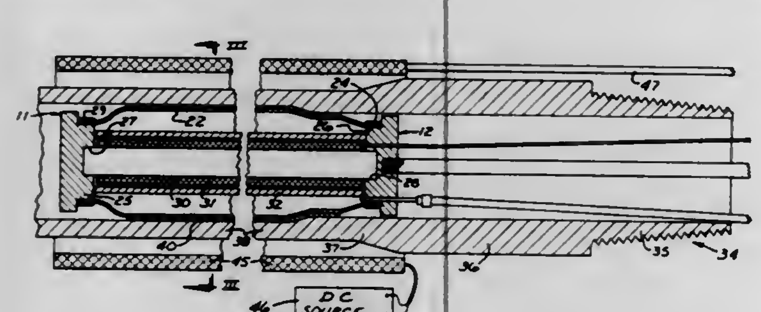

1. A device for magnetic testing of pipe, comprising: a tubular member of flexible material, support means for said pressure member including an elongated rigid central portion extending axially within said pressure member and a pair of end portions on opposite ends of said central portion, and seal means securing opposite ends of said pressure member to said end portions of said support means, said pressure member being arranged to receive and support a sheet of magnetizable material wrapped therearound, said device being insertable to a stationary portion within a pipe to position a sheet of magnetizable material wrapped on said pressure member in alignment with a portion of the pipe, magnetizing means operable with said device in said stationary position for applying a magnetizing field through substantially the full length of said portion of the pipe and substantially uniform throughout said portion, said support means being in the form of a yoke of magnetic material including an elongated core portion forming said central portion and a pair of circular pole portions at opposite ends of said core portion and forming said pair of end portions, said pole portions having generally cylindrical peripheral surfaces on a common axis coincident with a central longitudinal axis of said core portion, said magnetizing means comprising a magnetizing coil wound on said core portion, a split cylindrical shield of conductive material extending between said pole portions arond said magnetizing coil, means operable with said device in said stationary position for applying a burst of alternating current to said magnetizing coil, said split cylindrical shield being effective to obtain a uniform longitudinal field in said portion of the pipe and a uniform relationship between the size of inhomogeneities and the intensity of leakage fields in said portion of the pipe, and means operable with said device in said stationary position for supplying pressurized fluid into the space within said pressure member for inflating said pressure member and pressing a sheet of magnetizable material wrapped therearound into intimate contact with the inner surface of said portion of the pipe to record on said sheet localized leakage fields corresponding to inhomogeneities in said portion of the pipe.

4,063,158
GAUSSMETER
Edward Stephen Sabisky, Trenton, and Charles Hammond Anderson, Rocky Hill, both of N.J., assignors to RCA Corporation, New York, N.Y.
Filed Dec. 29, 1975, Ser. No. 644,817
Int. Cl.² G01R *33/02*
U.S. Cl. 324—224 **11 Claims**

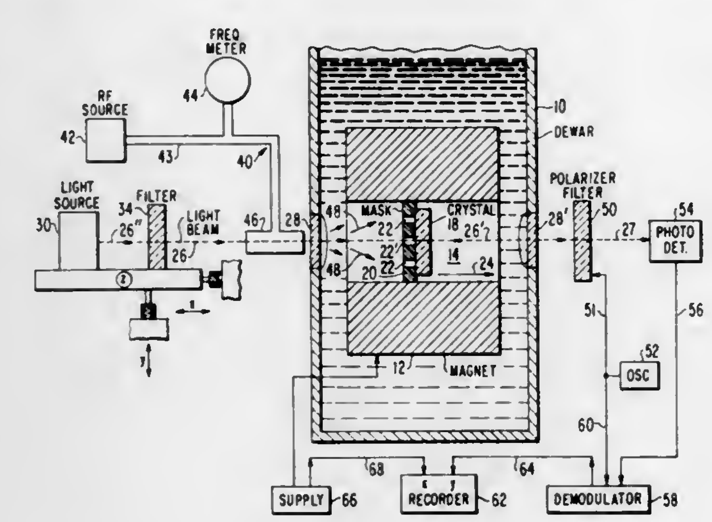

1. A gaussmeter comprising:
means for providing an input beam of electromagnetic radiation of relatively restricted cross-section and having a bandwidth in the visible spectrum,
electromagnetic radiation transmission means including a crystal adapted to be disposed in a magnetic field whose magnitude is to be determined, said crystal being responsive to said beam impinging thereon for producing an output beam of radiation manifesting the magnitude of said magnetic field,
positioning means coupled to said beam providing means for locating said beam at a given position on a portion of said crystal in said magnetic field, and
radiation processing means responsive to said output beam applied as an input thereto for producing as an output thereof a signal representing said magnetic field magnitude at said given position.

4,063,159
ADJUSTING DEVICE FOR MAGNETIC PROBES
Peter Häberlein, Reutlingen, Germany, assignor to Institut Dr. Friedrich Forster, Prufgeratebau, Reutlingen, Germany
Filed June 18, 1976, Ser. No. 697,446
Claims priority, application Germany, June 10, 1975, 2525751
Int. Cl.² G01R *33/02*
U.S. Cl. 324—260 **8 Claims**

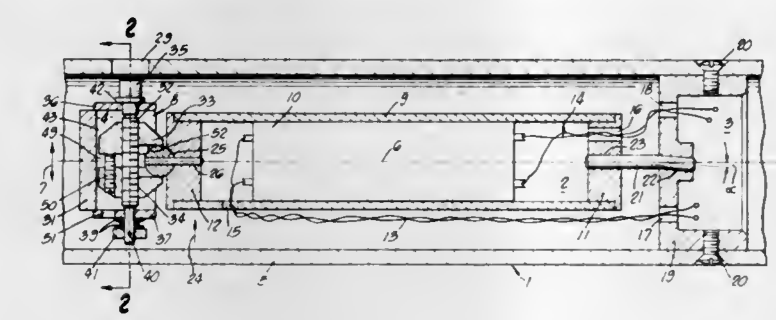

1. A device for adjustably locating a magnetic field probe having two ends within a hollow base, comprising:
first and second supporting bodies located within said base and affixed to said base at spaced points;
a resilient element interconnecting one probe end with the first supporting body providing the probe body with at least two resilient degrees of freedom generally at right angles to the axis formed by the two probe ends;
a socket and included spherical element interconnecting the second supporting body and the other probe end, and means for adjusting said socket and included spherical element as a unit transversely of the probe axis and relative to said second supporting body.

4,063,160
METHOD AND APPARATUS FOR LOCATING A FAULT ON A LINE BY MEANS OF TRAVELLING WAVE SIGNALS
Otto Lanz, Niederrohrdorf, and Michael Vitins, Zurich, both of Switzerland, assignors to BBC Brown Boveri & Company Limited, Baden, Switzerland
Filed Apr. 14, 1976, Ser. No. 676,983
Claims priority, application Switzerland, Apr. 28, 1975, 5427/75
Int. Cl.² G01R *31/08*
U.S. Cl. 324—52 **20 Claims**

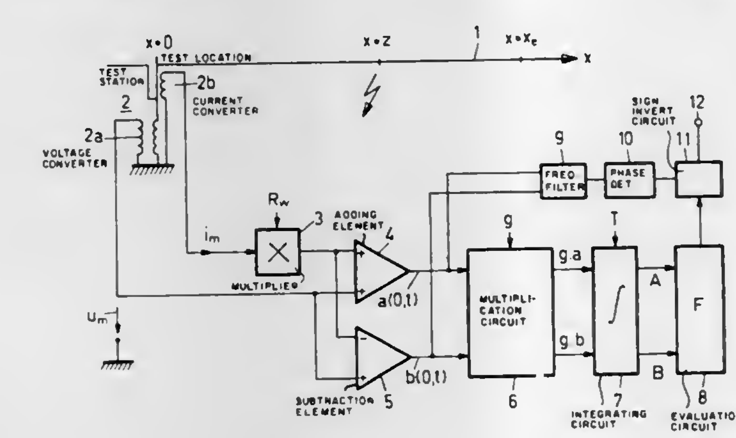

1. A method for locating a fault on a line in which there is formed from the voltage and current at a measuring location at least one signal (travelling-wave signal) associated with a travelling wave on the line and its variation with time at the measuring location, comprising the steps of forming a number of pairs of oppositely moving travelling-wave signals corresponding to the number of phases or conductors of the line, forming from these travelling-wave signals or signals derived therefrom as integrands at least two time integrals, each of which is associated with a direction of wave propagation on the line, processing said time integrals into an evaluation function characterizing at least any one of the fault direction and fault distance with respect to the measuring location and which evaluation function corresponds to a relation arising at the fault location between the oppositely moving travelling waves on the line.

4,063,161
BURIED CABLE FAULT LOCATOR WITH EARTH POTENTIAL INDICATOR AND PULSE GENERATOR
Robert J. Pardis, Darien, Ill., assignor to Joslyn Mfg. and Supply Co., Chicago, Ill.
Filed Apr. 14, 1975, Ser. No. 567,816
Int. Cl.² G01R *31/08;* **H02M** *3/18*
U.S. Cl. 324—52 **13 Claims**

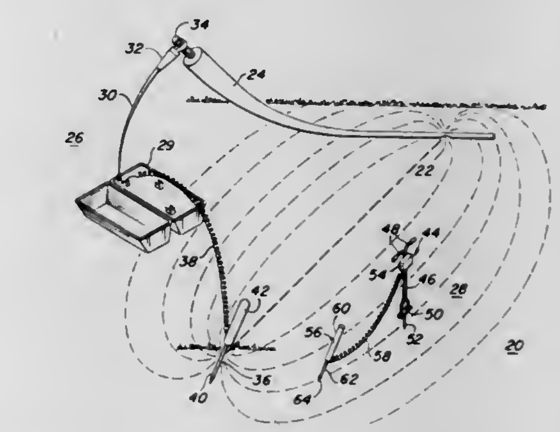

1. An earth potential gradient fault location device operable by a single operator for locating a fault to earth ground in a buried portion of an insulated power cable comprising
means adapted for energization by a battery power source for generating repetitive high voltage electrical pulses for application to said cable to generate potential gradients in the earth to aid in locating said fault, said generating means comprising an electrical power source, a plurality of capacitors and means for charging in parallel said plurality of capacitors from said power source and for discharging in series said plurality of capacitors to form said repetitive high voltage electrical pulses, and
means for monitoring potential differences in the earth and the polarity thereof established by said repetitive pulses, said monitoring means comprising probe means for obtaining the potential difference between two earth locations and means responsive to said potential difference for providing a visually perceptible indication of said potential difference to said operator, said potential difference monitoring means including means including direct current blocking means for automatically maintaining said visually perceptible indication providing means in a null condition in the absence of said pulses.

4,063,162
PROCESS AND APPARATUS FOR LOCATING FAULTS ON A LINE THROUGH THE USE OF TRAVELLING WAVE SIGNALS
Otto Lanz, Niederrohrdorf, and Michael Vitins, Zurich, both of Switzerland, assignors to BBC Brown Boveri & Company Limited, Baden, Switzerland
Filed Apr. 16, 1976, Ser. No. 677,685
Claims priority, application Switzerland, Apr. 28, 1975, 5428/75
Int. Cl.² G01R *31/08*
U.S. Cl. 324—52 **30 Claims**

1. A process for locating faults on a line, wherein at least one signal (travelling-wave signal) associated with a travelling wave on the line and corresponding to the temporal progression thereof at the measuring location is formed from the voltage and current at the measuring location, the improvement comprising the steps of: forming pairs of oppositely moving travelling-wave signals corresponding in number to the phases or conductors in the line and decoupled from one

another in relation to the line inductances and line capacitances, forming at least two time-integrals with these travelling-wave signals or signals derived therefrom as integrands, each time-integral being associated with one direction of wave-propagation on the line, and processing these time-integrals by an evaluating function to produce a value which characterizes

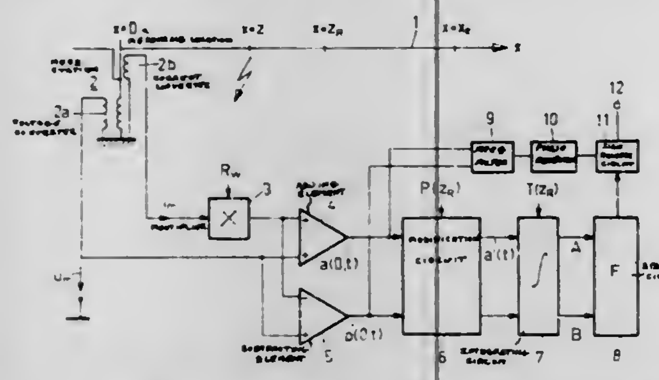

by way of at least any one of its sign and magnitude the direction and distance, respectively, of the fault with respect to a predetermined reference location on the line, which evaluating function corresponds to a relationship prevailing at the fault location between the travelling waves moving in opposite directions on the line.

4,063,163

APPARATUS FOR LOCALIZATION OF A LINE FAULT THROUGH THE USE OF PREDETERMINABLY SHIFTABLE REFERENCE LOCATION

Michael Vitins, Zurich, Switzerland, assignor to BBC Brown Boveri & Company Limited, Baden, Switzerland

Filed May 28, 1976, Ser. No. 691,142

Claims priority, application Switzerland, June 12, 1975, 7593/75

Int. Cl.² G01R *31/08*

U.S. Cl. 324—52 **4 Claims**

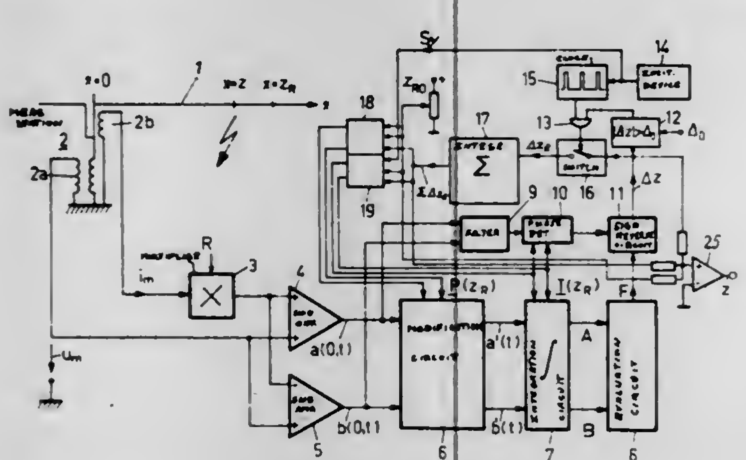

1. An apparatus for fault localization on a line wherein an evaluation signal is formed from at least one measurement voltage signal derived from the line voltage and at least one measurement current signal derived from the line current, the evaluation signal characterizing the direction and/or the distance of a fault location with respect to a reference location on the line which can be controlled by at least one adjustment magnitude, a voltage- and current-measurement device provided at the measurement location, a signal processing- and evaluation circuit having an input side operatively connected in circuit with said voltage- and current-measurement device, said signal processing - and evaluation circuit having an output side delivering said evaluation signal, the signal processing- and evaluation circuit possessing at least one reference location-adjustment input for the infeed of said adjustment magnitude, and means providing an operative connection between an output of the evaluation circuit and the reference location-adjustment input, said means providing said operative connection changing the momentarily effective reference location adjustment as a function of said evaluation signal.

4,063,164

METHOD AND APPARATUS FOR DETECTION OF SHORT CIRCUITS BY PHASE MONITORING TRAVELING WAVE SIGNALS

Otto Lanz; Jiri Mastner, both of Niederrohrdorf, and Michael Vitins, Zurich, all of Switzerland, assignors to BBC Brown Boveri & Company Limited, Baden, Switzerland

Filed June 14, 1976, Ser. No. 696,140

Claims priority, application Switzerland, June 19, 1976, 7979/76

Int. Cl.² G01R *31/08*

U.S. Cl. 324—52 **13 Claims**

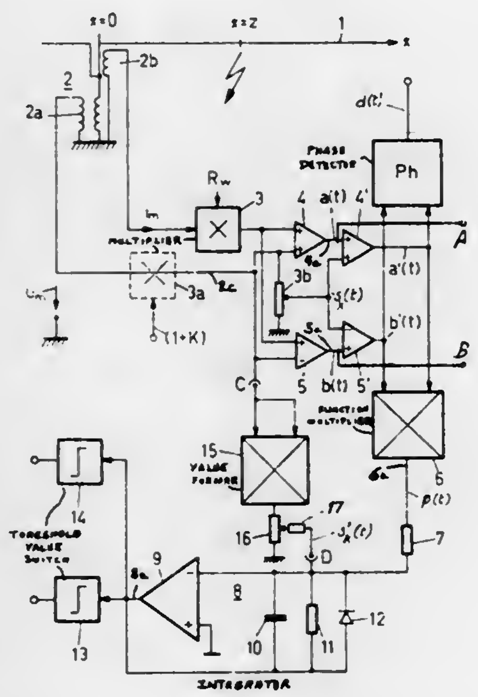

8. An apparatus for the detection of short-circuits on a line, operated with voltages and currents containing an alternating component, by detecting the course as a function of time of the voltage and current at a measurement location in the form of measurement voltages and measurement currents, said apparatus comprising a voltage measurement device for detecting the measurement voltage, a current measurement device for detecting the measurement current, a measurement voltage channel connected in circuit with the voltage measurement device, a measurement current channel connected in circuit with said current measurement device, said measurement current channel including a constant factor multiplier, an addition circuit having input means and output means, a subtraction circuit having input means and output means, said measurement voltage channel and said measurement current channel being connected in parallel with the respective input means of said addition circuit and said subtraction circuit, a phase angle detector, said output means of both said addition circuit and said subtraction circuit being connected with said phase angle detector.

4,063,165

APPARATUS FOR LOCALIZATION OF A LINE FAULT BY USING TRAVELING WAVE SIGNALS ESPECIALLY FOR LOCATING FAULTS BOTH NEAR AND FAR FROM A MEASURING LOCATION

Otto Lanz, Niederrohrdorf, Switzerland, assignor to BBC Brown Boveri & Company Limited, Baden, Switzerland

Filed May 27, 1976, Ser. No. 690,611

Claims priority, application Switzerland, June 6, 1975, 7347/75

Int. Cl.² G01R *31/08*

U.S. Cl. 324—52 **7 Claims**

1. An apparatus for localization of a line fault wherein there

is formed at least one signal (traveling wave signal) from the voltage and current at a measuring location and associated with a traveling wave on the line and its variation as a function of time at the measuring location, said apparatus comprising the combination of:

a. a voltage- and current-measuring circuit provided at the measuring location on the line, said voltage- and current-measuring circuit having outputs which carry a number of voltage-current signal pairs independent of one another with respect to the line inductances and line capacitances and corresponding to the number of phases or conductors of the line;
b. a summation circuit having at least two outputs;
c. the summation circuit being connected via at least one voltage signal channel and one current signal channel with the measuring circuit, said summation circuit additively and subtractively superimposing at least one pair of

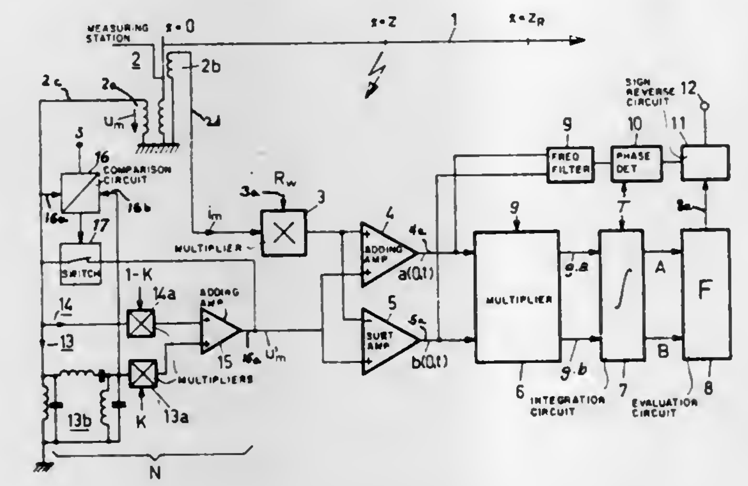

mutually independent voltage and current signals into traveling wave signals related to oppositely moving traveling waves, said traveling wave signals appearing at the outputs of the summation circuit;
d. an integration circuit for the formation of time integrals of the traveling wave signals;
e. an evaluation circuit for processing at least two traveling wave-time integrals into an evaluation function selectively characterizing at least any one of the (i) fault direction, (ii) the fault distance from the measuring location, (iii) both the fault direction and fault distance from the measuring location, or (iv) at least a predetermined reference location on the line;
f. said voltage signal channel comprising two parallel branches, one of said parallel branches comprises an oscillating circuit having a natural frequency contained in the fault-free line voltage.

4,063,166

METHOD FOR LOCATING A FAULT ON A LINE NEAR TO A MEASURING LOCATION WITH THE AID OF SUBSTITUTE SIGNALS

Hans Glavitsch, Nussbaumen, and Michael Vitins, Zurich, both of Switzerland, assignors to BBC Brown Boveri & Company Limited, Baden, Switzerland

Filed May 24, 1976, Ser. No. 689,653

Claims priority, application Switzerland, June 5, 1975, 7245/75

Int. Cl.² G01R *31/08*

U.S. Cl. 324—52 **4 Claims**

1. A method of locating a fault on a line wherein at least at one measuring location there is formed at least one measurement voltage signal derived from a line voltage and at least one measurement current signal derived from a line current, producing from the measurement signals at least one traveling wave signal associated with the temporal progression prevailing at the measurement location of a traveling wave on the line, and forming an evaluation signal characterizing at least the direction of the location of a fault relative to the measuring location, the improvement comprising the steps of: starting from an operating condition of the line free of faults deriving a substitute-measurement voltage signal which at least approximately corresponds to a frequency component of the line

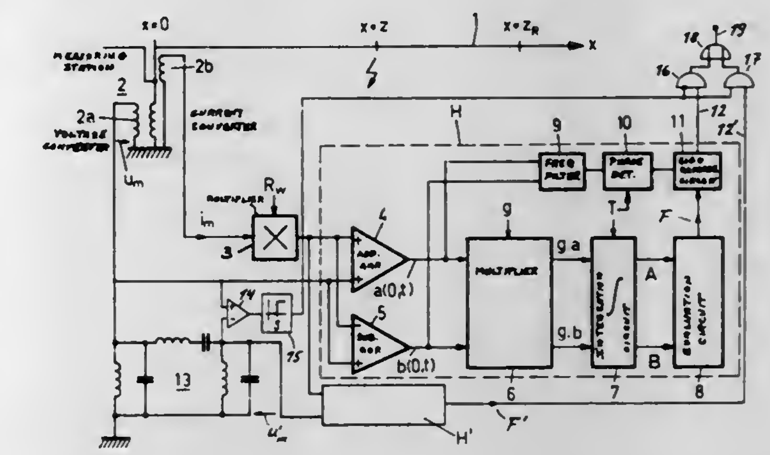

voltage in magnitude and phase and is at least approximately independent of a breakdown of the line voltage for a limited time interval, and forming by means of the substitute-measurement voltage signal at least one substitute-traveling wave signal and a substitute-evaluation signal.

4,063,167

BLADE TIP CLEARANCE MEASURING APPARATUS

Alan R. Duly, Huntington, Conn., assignor to AVCO Corporation, Stratford, Conn.

Filed June 7, 1976, Ser. No. 693,493

Int. Cl.² G01R *27/26*

U.S. Cl. 324—61 R **7 Claims**

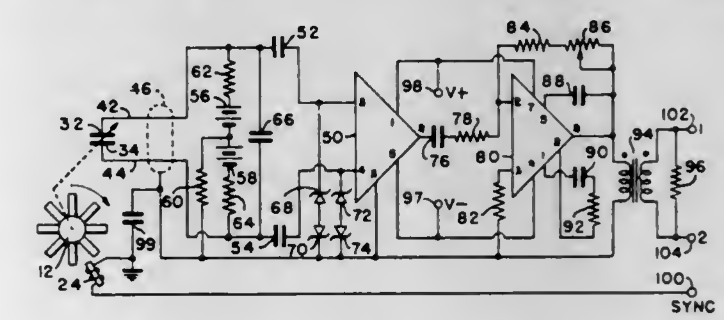

1. Apparatus for the noncontact measurement of the clearance between a rotating member and the housing in which said member is mounted, said apparatus comprising:

a sensor probe fixedly mounted in said housing in close proximity to but not touching said rotating member, said probe consisting of two metallic conductors positioned side by side and insulated one from the other, said conductors forming the anode and cathode electrodes of a capacitor, the capacitance of said probe being a function of the proximity of said member to said electrodes;

a source of direct current voltage connected across said electrodes, the positive voltage source being connected via a first resistor element and a first conductor lead to the anode electrode and the negative voltage source being connected via a second resistor element and a second conductor lead to the cathode electrode, said direct current voltage source being connected to common ground at its mid-voltage point;

electronic circuit means coupled to the electrodes of said sensor probe for producing a voltage wave output, said means including a charge differential amplifier having one of its inputs coupled to said anode electrode and the second of its inputs coupled to said cathode electrode, the output of said charge differential amplifier serving as the input to an inverting AC-coupled feedback amplifier, the output of said feedback amplifier passing through an isolation transformer and serving as the signal voltage wave output of said electronic circuit means, the amplitude of

said voltage wave being proportional to the changing value of capacitance measured across the electrodes of said sensor probe; and

means for displaying the electrical analog of the separation between the sensor probe and the peripheral extremities of said rotating member.

4,063,168

METHOD AND APPARATUS FOR LOCATING THE SOURCE OF CORONA DISCHARGE

Earnest Allen Franke, Howell Township, Monmouth County, N.J., assignor to Bell Telephone Laboratories, Incorporated, Murray Hill, N.J.

Filed Nov. 7, 1975, Ser. No. 630,073

Int. Cl.² G01R *31/02*

U.S. Cl. 324—72 **7 Claims**

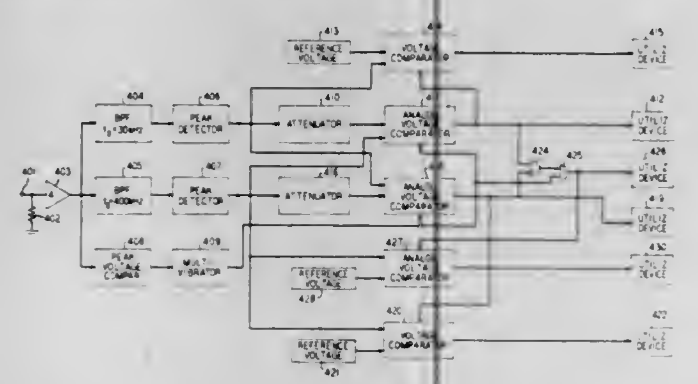

1. A discharge detector for apparatus subject to discharges from a plurality of particular sources within said apparatus, a plurality of signature waveforms having uniquely identifiable time dependent shapes and associated frequency spectrum shapes being predetermined, each of said particular sources generating upon discharge a discharge signal being uniquely identifiable in the time and frequency domains as one of said signature waveforms comprising means for measuring the spectral energies of a discharge signal at two or more predetermined frequencies, means for comparing the magnitudes of said spectral energies at said predetermined frequencies, and means for determining from the relationship between the magnitudes of the spectral energies at said predetermined frequencies the signature waveform in the frequency domain to which said discharge signal is identified and for determining the source of said discharge from said identified signature waveform.

4,063,169

METHOD AND APPARATUS FOR MICROWAVE FREQUENCY COUNTING

Roger C. Palmer, Edmonds, Wash., assignor to John Fluke Manufacturing Company, Inc., Mountlake Terrace, Wash.

Filed Apr. 9, 1976, Ser. No. 675,468

Int. Cl.² G01R *23/14*

U.S. Cl. 324—79 D **25 Claims**

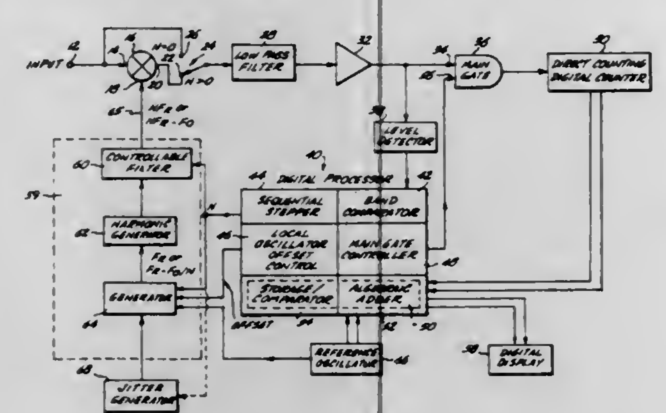

1. A frequency counter suitable for determining the unknown frequency of an input signal over a wide frequency range up to and including at least a portion of the microwave frequency range comprising:

1. a local oscillator means suitable for selectively producing one of:
   a. a sequence of principal local oscillator signals, said principal local oscillator signals comprising a fundamental frequency and a predetermined number of harmonics of said fundamental frequency; and,
   b. a sequence of offset signals, one offset signal related to each of said principal local oscillator signals each of said offset signals being at a frequency offset from its related principal local oscillator signal by a predetermined amount;
2. a two-input mixer means, having one input connected to receive the signal whose frequency is to be determined and a second input connected to said local oscillator means for receiving a selected one of the signals produced by said local oscillator means, for producing a signal having a frequency equal to the difference between the two signals applied to the inputs of said two input mixer;
3. a controllable gate having a signal input connected to the output of said mixer for passing the difference signals produced at the output of said mixer when said controllable gate is enabled;
4. frequency counting means connected to the output of said controllable gate for counting the frequency of signals passed by said controllable gate, said frequency counter having a maximum frequency counting capability;
5. a control and summation means for controlling the operation of said local oscillator means and said controllable gate and for summing a predetermined count made by said frequency counting means with the frequency of the signal produced by said local oscillator means when said predetermined count was made, said control and summation means:
   a. connected to the output of said mixer means, for receiving the output thereof and determining whether or not said output includes a signal whose frequency is below the maximum frequency counting capability of said frequency counting means;
   b. connected to the enable input of said controllable gate for enabling said controllable gate when the output of said mixer means includes a signal whose frequency is below the maximum frequency counting capability of said frequency counting means;
   c. connected to said local oscillator means for controlling said local oscillator means such that said local oscillator means:
      i. produces, one-at-a-tine, said sequence of principal local oscillator signals until the output of said mixer means includes a first signal whose frequency is below the maximum frequency counting capability of said frequency counting means; and,
      ii. subsequent to the occurrence of said first signal being included in the output of said mixer, produces one of said sequence of offset signals, said one of said sequence of offset signals being the one related to the one of said sequence of principal local oscillator signals produces when said first signal was included in the output of said mixer; and,
   d. connected to said frequency counting means for receiving the counts made by said frequency counting means.

4,063,170

LEVEL METER CIRCUIT

Kozo Kobayashi, Kodaira, Japan, assignor to Nakamichi Research Inc., Kodaira, Japan

Continuation-in-part of Ser. No. 542,924, Jan. 22, 1975, abandoned. This application July 1, 1976, Ser. No. 701,910

Claims priority, application Japan, Jan. 26, 1974, 49-11370; Jan. 29, 1974, 49-12212

Int. Cl.² G01R *15/10*

U.S. Cl. 324—132 **3 Claims**

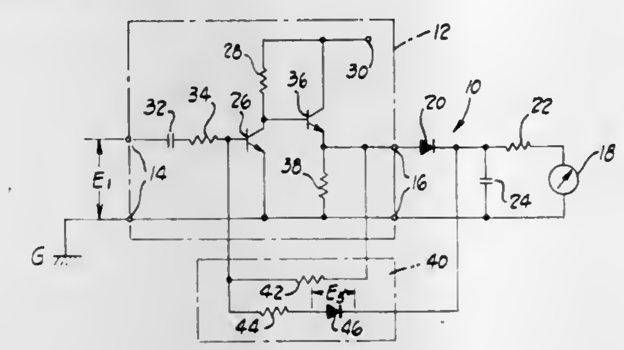

1. A level meter circuit for indicating a level of input signal over a wide dynamic range, comprising an amplifier of relatively high amplification factor having input terminal means to which an input signal is supplied and output terminal means to be connected to a level meter and negative feedback means including a feedback resistance to feedback an output signal from said output terminal means to an input side of said amplifier, and non-linear impedance means operatively connected in parallel to said feedback resistance and having such characteristics that when said output signal from said output terminal means is below a predetermined level said non-linear impedance means has a substantially infinite impedance and when said output signal from said output terminal means reaches said predetermined level said non-linear impedance means has a predetermined impedance, said amplifier including means to amplify and to feed to said ouput terminal means substantially only one of positive and negative amplitudes of an A.C. input signal supplied to said input terminal means, a forwarded diode connected in series with said level meter between said output terminal and said level meter, and a capacitance connected in parallel with said level meter, with one end of said capacitance being connected to said forwarded diode at the level meter side thereof, and wherein said non-linear impedance means has one end connected to the point of the junction between said forwarded diode and said capacitance and the other end connected to said input side of said amplifier so as to be operatively connected in parallel to said feedback resistance.

4,063,171

FAULT INDICATOR RESPONSIVE TO FLOW OF FAULT CURRENT IN A CONDUCTOR WHEN POWER FLOW IS IN ONE DIRECTION ONLY

Edmund O. Schweitzer, Jr., 1002 Dundee Road, Northbrook, Ill. 60118

Filed Nov. 4, 1976, Ser. No. 738,969

Int. Cl.² G01R *19/14, 31/08, 19/16*

U.S. Cl. 324—133 **8 Claims**

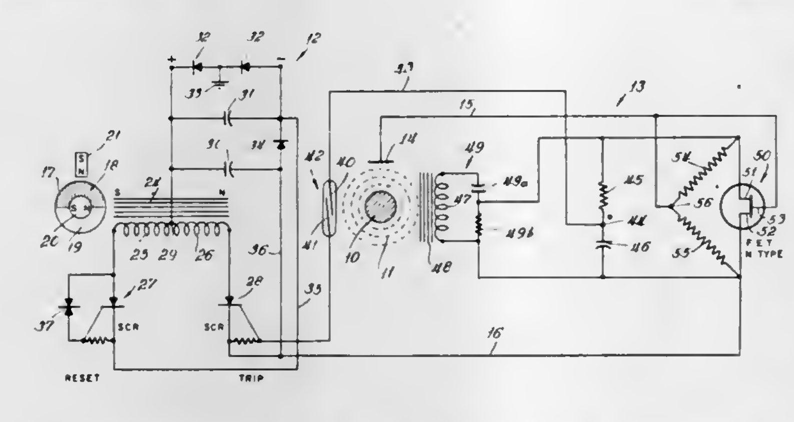

1. Means responsive to flow of alternating fault current in and high voltage energization of a conductor in which the power flow may be in a preferred direction or in the opposite direction depending upon the location of the fault comprising: a fault indicator including, a target, a magnetic core, a trip winding on said magnetic core for moving said target from a non-indicating position to a fault indicating position and voltage sensitive switch means connected to said trip winding for energizing it from a current source on application of predetermined control potential thereto; power flow direction responsive means energized in accordance with the voltage at which said conductor is energized and the current flow in said conductor arranged to generate said control potential when the power flow is in said preferred direction, and circuit means interconnecting said voltage sensitive switch means and said power flow direction responsive means including switch means responsive to flow of fault current in said conductor to render said voltage sensitive switch means conducting when said power flow is in said preferred direction to energize said trip winding.

4,063,172

MULTIPLE SITE, DIFFERENTIAL DISPLACEMENT, SURFACE CONTACTING ASSEMBLY

Louis Henry Faure; Howard Thomas Johnston, Jr., both of Poughkeepsie, and Dana Roberts Townsend, Fishkill, all of N.Y., assignors to International Business Machines Corporation, Armonk, N.Y.

Filed June 1, 1976, Ser. No. 691,685

Int. Cl.² G01R *31/02*

U.S. Cl. 324—158 P **9 Claims**

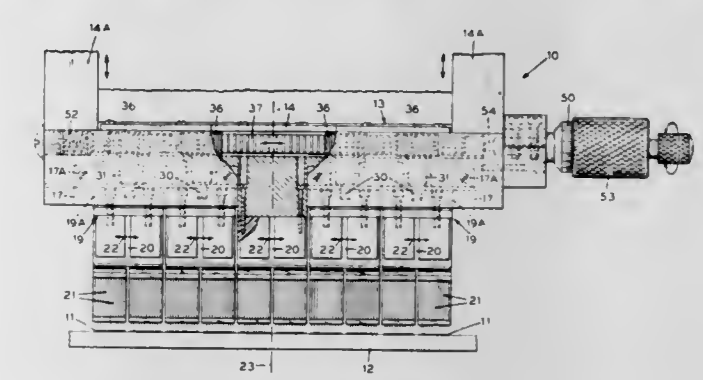

1. A multiple site surface contacting assembly comprising in combination:

a mount, a plurality of groups of surface impinging contactors; means mounting said groups for movement thereof relative to said mount; a reference; a plurality of cam means and at least some of said groups of surface impinging contactors of said plurality of groups having cam follower means for association with a cam means of said plurality of cam means; each of said cam and cam follower means having a displacement dependent upon its distance from said reference; and actuating means connected to said cam means for effecting simultaneous actuation of said cam means.

4,063,173

DUAL MODE RECEIVER

John Raymond Nelson, Scottsdale; James Robert Shaner, and Don Reginald Holcomb, both of Phoenix, all of Ariz., assignors to Motorola, Inc., Schaumburg, Ill.

Filed Apr. 1, 1976, Ser. No. 672,588

Int. Cl.² H04B *1/59*

U.S. Cl. 325—11 **6 Claims**

1. In a transponder including a receiver and a transmitter, apparatus providing dual mode operation of the receiver comprising

a. a first phase locked loop including a first mixer connected to the receiver for receiving therefrom a signal of a first frequency in a first mode of operation and a signal of a

second frequency, different from said first frequency, in a second mode of operation, said first phase locked loop supplying an output signal to control the transmitter;

b. a second phase locked loop connected to receive the output signal from said first phase locked loop and further connected to supply a low-side injection signal to said first

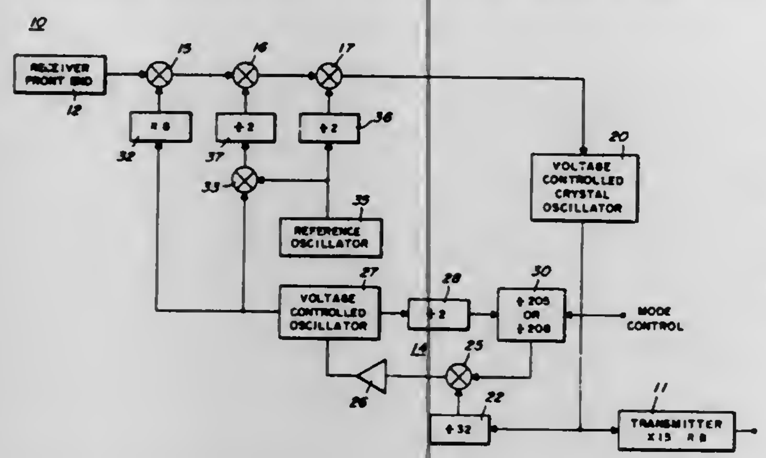

mixer in the first mode of operation and a high-side injection signal to said first mixer in the second mode of operation, said second phase locked loop including switchable frequency divider means for switching said second phase locked loop between the first and the second modes of operation.

4,063,174
CIRCUIT ARRANGEMENT FOR DIVERSITY DATA TRANSMISSION
Jutta Das Gupta, Wolfratshausen; Wernhard Markwitz, and Werner Paetsch, both of Munich, all of Germany, assignors to Siemens Aktiengesellschaft, Munich, Germany
Filed June 29, 1976, Ser. No. 700,880
Claims priority, application Germany, July 2, 1975, 2529574
Int. Cl.² H04B *7/02*
U.S. Cl. 325—304 **5 Claims**

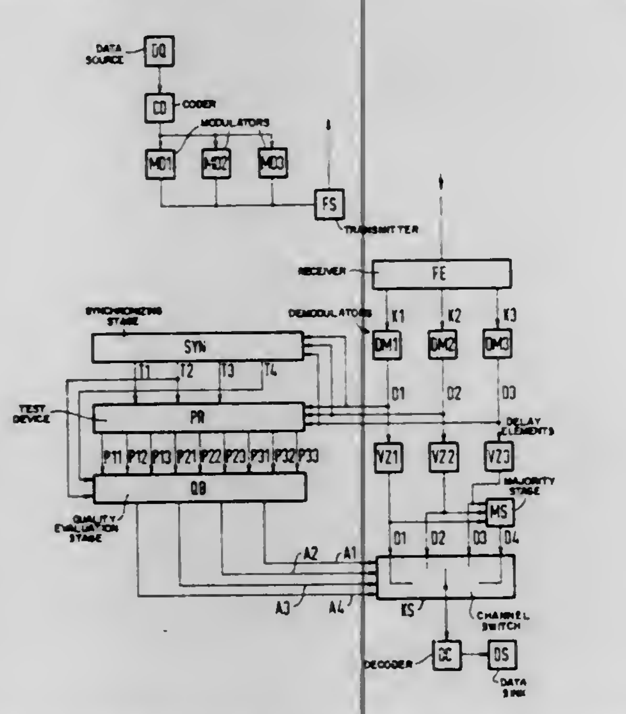

1. A circuit arrangement for increasing the transmission quality in a diversity data transmission system, comprising:
a plurality of diversity data channels,
majority logic circuit means connected to receive said diversity data channels for emitting a majority signal indicating which binary value a majority of said diversity data channels is carrying,
channel switch means having inputs connected to receive said diversity data channels and said majority signal as data channels,
quality evaluation means for operating said channel switch means to emit the signal on one of said diversity data channels when during a predetermined test period a majority of said diversity data channels are of better transmission quality than the remaining diversity data channels by a first predetermined value, said quality evaluation means being operable to cause said channel switch means to switch through said majority signal when during said test period the majority of said diversity data channels are of poorer quality than the remaining diversity data channels by a predetermined second value.

4,063,175
AMPLIFIER FOR RECEIVE MODE OPERATION
Eliot I. Friedman, 1175 Wendy Road, Ann Arbor, Mich. 48103
Filed Aug. 5, 1976, Ser. No. 711,785
Int. Cl.² H04B *1/10*
U.S. Cl. 325—377 **8 Claims**

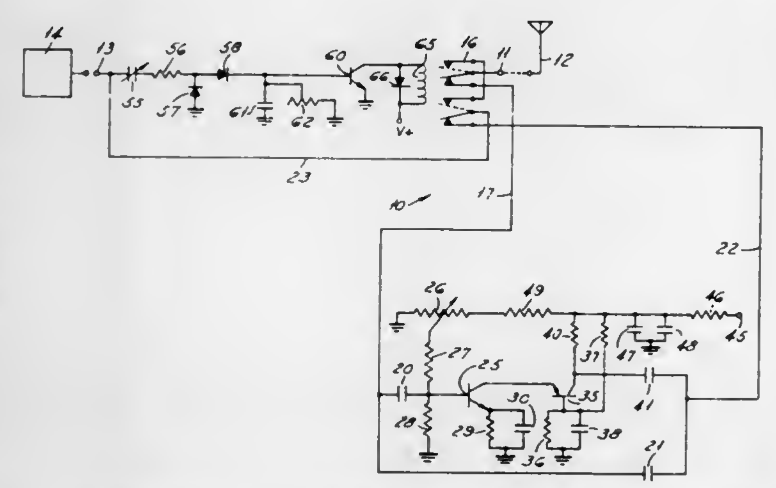

1. An amplifier circuit adapted to be interposed between an antenna and a communications device such as a radio, scanner, transceiver or the like to amplify incoming signals comprising:
an input terminal to receive incoming signals from said antenna;
an output terminal to couple amplified signals to said communications device;
a current divider for dividing incoming signals into first and second portions, said first portion being coupled directly from said input terminal through said current divider to said output terminal;
a current amplifier including a pair of cascaded transistors to receive incoming signals from said second portion of said current divider and for amplifying said signals and coupling said signals to the output terminal of said amplifier circuit; and
a filter network, coupled to said current amplifier, for bypassing to ground electrical noise, such as engine ignition noise and alternator noise, when the amplifier circuit is utilized in a mobile installation.

4,063,176
BROADBAND HIGH FREQUENCY MIXER
Thomas A. Milligan, Littleton, and Peter Will, Denver, both of Colo., assignors to Vari-L Company, Inc., Denver, Colo.
Filed July 29, 1976, Ser. No. 709,581
Int. Cl.² H04B *1/26;* H03H *7/42*
U.S. Cl. 325—446 **16 Claims**

1. A broadband mixer comprising:
first balun means coupled to a first signal port for converting an unbalanced first signal applied to said first signal port to a balanced to ground first signal;
second balun means coupled to a second signal port for converting an unbalanced second signal applied to said second signal port to a balanced to ground second signal, said first balun means being connected in a polarity relationship with said second balun means so that the balanced to ground signals of one of said first and second balun means do not pass to the signal port coupled to the other of said first and second balun means;
third balun means coupled to a third signal port;

frequency converting means having at least a first set of terminals and a second set of terminals to which are applied said balanced to ground first signal and said balanced to ground second signal, and a third set of terminals, said frequency converting means including an arrangement of non-linear devices associated with said first, second and third sets of terminals for converting said balanced to

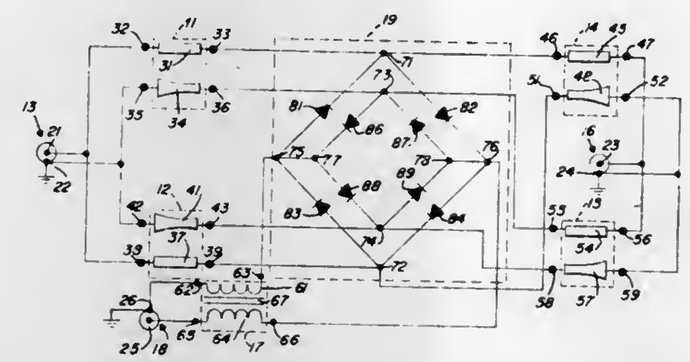

ground first and second signals to a balanced to ground third signal at said third set of terminals that is conducted via said third balun means to produce an unbalanced to ground third signal at said third signal port, said non-linear devices electrically isolating first and second signals at said first and second signal ports from said third signal port.

4,063,177
PLURAL BAND, SINGLE/DOUBLE CONVERSION RADIO RECEIVER
Masami Yanagibori, Tokyo, Japan, assignor to Sony Corporation, Tokyo, Japan
Filed Oct. 5, 1976, Ser. No. 729,680
Claims priority, application Japan, Oct. 9, 1975, 50-138485[U]
Int. Cl.² H03D *7/16;* H04B *1/28*
U.S. Cl. 325—460 **7 Claims**

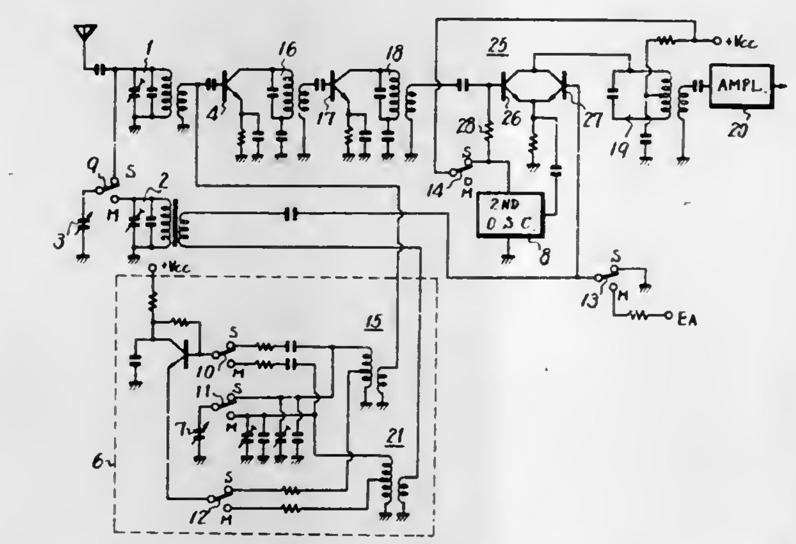

1. A radio receiver for selectively receiving broadcast signals in first and second frequency bands, comprising:
first and second local oscillators for producing respective local oscillation signals;
a first tuning circuit for tuning to a broadcast signal in said first frequency band;
a first mixer coupled to said first tuning circuit for converting the broadcast signal of said first frequency band into a first intermediate frequency signal with a local oscillation signal from said first local oscillator;
a second tuning circuit for tuning to a broadcast signal in said second frequency band;
a second mixer consisting of first and second transistors each having input, output and common electrodes, said common electrodes of said first and second transistors being connected to each other, and said output electrodes of said first and second transistors being connected to each other;
means coupling the input electrode of said first transistor to said first mixer for converting said first intermediate frequency signal into a second intermediate frequency signal with a local oscillation signal from said second local oscillator;
means coupling the input electrode of said second transistor to said second tuning circuit and said first local oscillator for converting the broadcast signal of said second frequency band into an intermediate frequency signal by means of a local oscillation signal from said first local oscillator; and
switching means for selectively enabling and disabling said first and second transistors and thereby providing a respective predetermined intermediate frequency signal at the output electrodes of said transistors corresponding to a broadcast signal selectively received in one of said frequency bands.

4,063,178
MEMORY TUNING SYSTEM WITH DIFFERENT SPEEDS IN PROGRAM AND OPERATE MODES
Akio Tanaka, Chicago, Ill., assignor to Zenith Radio Corporation, Glenview, Ill.
Filed Dec. 18, 1975, Ser. No. 641,782
Int. Cl.² H04B *1/06*
U.S. Cl. 325—464 **10 Claims**

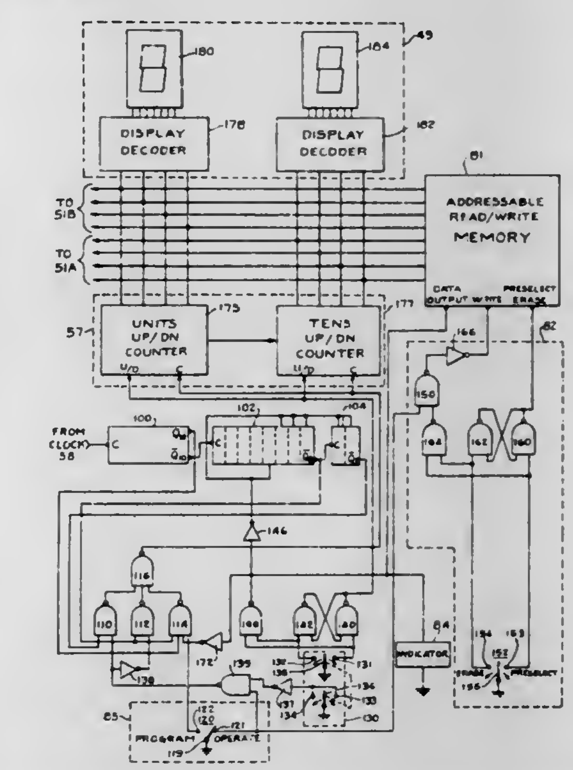

1. A television tuning system having counting means, generating sequential channel number information for tuning all channels, coupled to read/write memory means accessed by said channel number information and having a plurality of addressable locations for storage and recall of signals related to selected channel number information, said tuning system having a program mode for storage of said signals and an operate mode for recall from said memory means of said signals to cause tuning to channels corresponding to the addresses of individual locations of said memory means, including:
mode selection means for establishing either of said two modes; and
sequence control means, coupled to said counting means and responsive to said mode selection means, for changing the counting speed of said counting means to produce different access speeds for said memory locations in said two modes.

4,063,179

CHANNEL SELECTOR FOR A SCANNING MONITOR RECEIVER

Marshall M. Brown, San Marino, Calif., assignor to Craig Corporation, San Marino, Calif.

Filed July 21, 1976, Ser. No. 707,387

Int. Cl.^{2} H04B *1/32*

U.S. Cl. 325—470 10 Claims

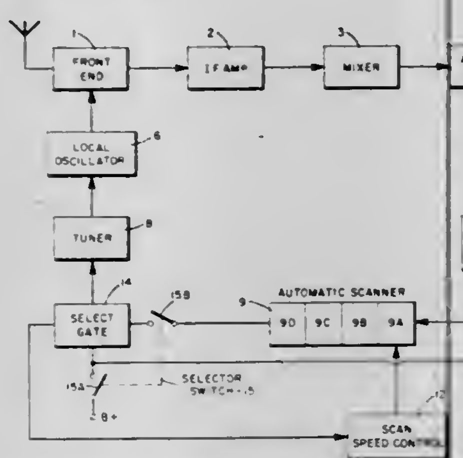

1. In a radio broadcast receiver for automatically monitoring a plurality of preselected broadcast channels, said receiver comprising a plurality of tuning means for enabling said receiver to receive a preselected plurality of broadcast channels, scanning means connected to said tuning means for sequentially scanning said plurality of tuning means to determine whether a ratio signal is present in any of said plurality of preselected channels, locking means connected to said scanning means for stopping the sequential scanning, said locking means being responsive to the presence of a radio signal in a particular preselected channel for locking said scanning means on said particular preselected channel for the length of transmission, said scanning means automatically recommencing sequential scanning upon termination of said transmission, the improvement comprising:

a plurality of select gate means connected between said scanning means and each of said plurality of tuning means for controlling the activation of each of said tuning means in response to the sequential scanning of said scanning means; and

a plurality of three-position switches, one of which is connected to each of said select gate means in each of the preselected broadcast channels, whereby the operation of each of said select gate means is controlled by the position of the three-position switch connected thereto, said switches being positionable to select one of the following three modes of operation for said select gate means with respect to each of said preselected channels:

a. a select mode wherein a subgroup of one or more of the preselected channels is selected for scanning, said select mode being represented by a first contact position in each of said switches;

b. a normal scan mode wherein all the preselected channels are scanned, said scan mode being represented by a second contact position in each of said switches; and

c. a bypass mode wherein a subgroup of one or more of the preselected channels may be bypassed during sequential scanning, said bypass mode being represented by a third contact position in each of said switches.

4,063,180

NOISE DETECTING CIRCUIT

Stanley R. C. Norman, Brockville, Canada, assignor to GTE Automatic Electric (Canada) Ltd., Brockville, Canada

Filed Oct. 12, 1976, Ser. No. 731,402

Int. Cl.^{2} H03K *5/20*

U.S. Cl. 328—112 10 Claims

1. A noise detecting circuit for a data processing channel which is adapted to receive a train of data pulses preceded by a start pulse of a known duration and noise pulses of characteristic durations less than that of the start pulse and for providing an inhibit signal to the data processing channel in response to a first incoming pulse being a noise pulse, comprising:

a first circuit responsive to a first incoming pulse for generating a noise verification pulse after a predetermined interval of time which is greater than the characteristic duration of a noise pulse and less than the duration of a start pulse;

a second circuit receiving the first incoming pulse and the noise verification pulse and responsive to a lack of time coincidence between the first incoming pulse and the noise verification pulse for generating an inhibit signal to inhibit the processing of a next incoming pulse by the data processing channel, whereby upon receipt of a first incoming pulse having a duration corresponding to that of a start pulse for a succeeding train of data pulses, the succeeding train of data pulses is coupled through the data processing channel and upon receipt of a first incoming pulse of a duration less than that of a start pulse an inhibit signal is generated in said second circuit for inhibiting the coupling of succeeding pulses through the data processing channel.

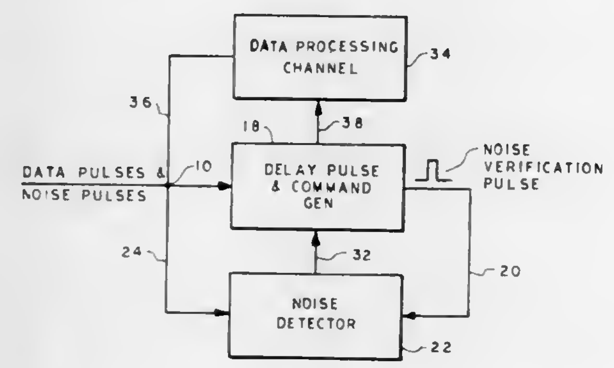

4,063,181

POSITIVE SAFETY CONTROL DEVICE

Claude Lefebvre, Les Lilas, and Jean-Paul Therond, Versailles, both of France, assignors to Commissariat a l'Energie Atomique, Paris, France

Filed Dec. 3, 1975, Ser. No. 637,432

Claims priority, application France, Dec. 11, 1974, 74.40768

Int. Cl.^{2} H03B *3/02*

U.S. Cl. 328—147 10 Claims

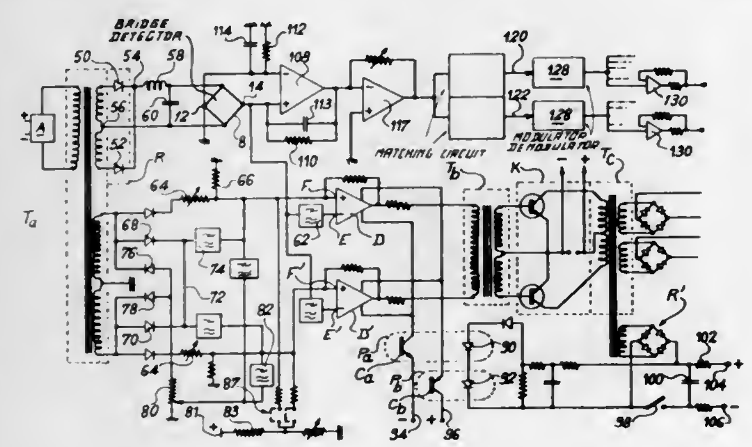

1. A positive-safety control device for producing action when the value of a signal delivered in the form of direct-current voltage by a detector is located outside a range limited by two adjustable values, namely the value of voltage at which the device delivers a direct-current output voltage having the logic value +1, said device being such as to deliver the output logic value 0 in respect of any other value of the signal outside said range of values or in the event of any failure of an element of the circuit, wherein said device comprises:

a stabilized supply which delivers a periodic rectangular-wave voltage of constant amplitude,

a rectifier connected to a secondary winding of an electrical isolation transformer whose primary winding is supplied with the voltage delivered by the supply said rectifier being such as to deliver a direct-current voltage,

a detector which is supplied with direct-current voltage through the rectifier and delivers a direct-current voltage having an amplitude V*e* which is proportional to the lvalue of the signal to be measured,

two generators for producing direct-current voltages of opposite sign V*d* and Vref, the inputs of said generators being supplied with the voltage induced in the secondary winding of the transformer

an adjustable voltage divider which is connected to the secondary winding of the electrical isolation transformer and delivers a periodic rectangular-wave voltage having an amplitude V*s*,

means for comparing the voltage V*e* with the algebraic sum of three voltages having amplitudes V*d* and Vref and the periodic rectangular-wave voltage V*s* and for delivering an output voltage S which is zero if the voltage V*e* is not comprised within the range (V*d* + Vref, V*d* + Vref + V*s*) and equal to +1 if the output voltage is comprised within said range,

means for electrically isolating, amplifying and rectifying the output voltage S.

4,063,182

SAMPLE-AND-HOLD CIRCUIT FOR ANALOG VOLTAGES

Yves Besson, Paris, France, assignor to Thomson-CSF, Paris, France

Filed Dec. 19, 1975, Ser. No. 642,322

Claims priority, application France, Dec. 27, 1974, 74.43144

Int. Cl.^{2} H03K *17/26*

U.S. Cl. 328—151 6 Claims

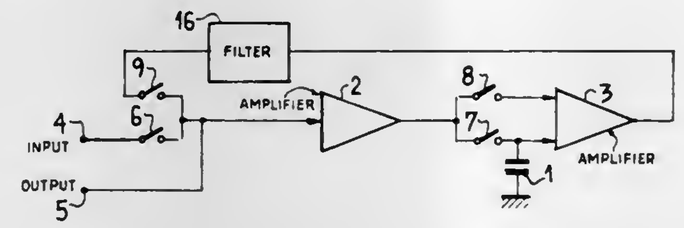

1. A sample-and-hold circuit comprising:

a first amplifier having an input and an output;

a second amplifier having a pair of differential inputs and an output;

an input terminal connected to a source of voltage to be stored;

an output terminal permanently connected to the input of said first amplifier;

a first switch inserted between said input terminal and said output terminal;

a storage capacitor permanently connected to one of said differential inputs;

a second switch inserted between the output of said first amplifier and said one of said differential inputs;

a third switch inserted between the output of said first amplifier and the other of said differential inputs;

a feedback path extending from the output of said second amplifier to the input of said first amplifier and to said output terminal;

a fourth switch in said feedback path; and

control means connected to said first, second, third and fourth switches for closing said first and second switches to the exclusion of said third and fourth switching during a sampling phase of an operating cycle, thereby connecting said input terminal independently of said amplifiers to said output terminal and via said first amplifier to said storage capacitor for building up a charge voltage thereon, and for closing said third and fourth switches to the exclusion of said first and second switches during a holding phase of said operating cycle, thereby feeding back an error voltage whose magnitude on the input of said first amplifier and thus on said output terminal substantially equals the magnitude of the source voltage at the end of the preceding sampling phase and whose magnitude on the output of said first amplifier and thus on said other of said differential inputs substantially balances said charge voltage.

4,063,183

ADAPTIVE EQUALIZER WITH IMPROVED DISTORTION ANALYSIS

John Brian Evans, Plano, Tex., assignor to Xerox Corporation, Stamford, Conn.

Division of Ser. No. 672,108, March 31, 1976, abandoned. This application Feb. 10, 1977, Ser. No. 767,604

Int. Cl.^{2} H04B *3/04*

U.S. Cl. 328—163 4 Claims

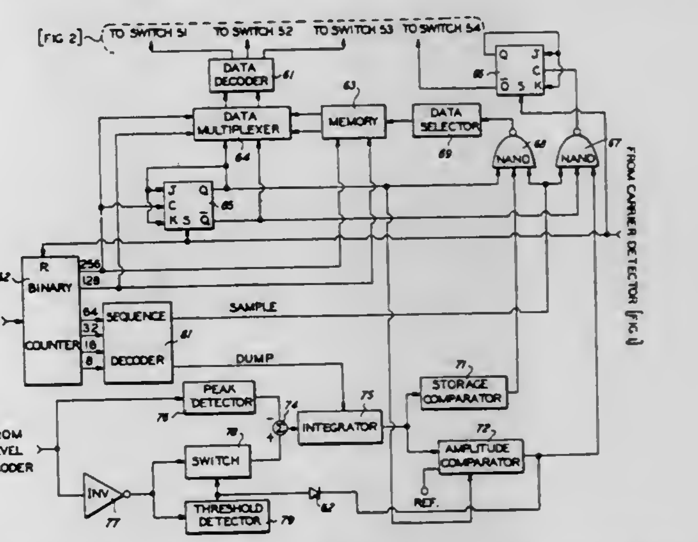

1. A method for analyzing the phase distortion characteristics of a limited bandwidth transmission channel, said method comprising the steps of

obtaining a baseband response of said channel to a seris of test pulses,

rectifying said response,

tracking peak values of said rectified response to generate a first current proportional to said peak values,

tracking ripple components of said rectified response to generate a second current proportional to said ripple components,

differentially combining said first and second currents in accordance with predetermined weighting factors to obtain a weighted difference current, and

integrating said difference current to obtain a weighted peak-to-average rectified ripple measurement for said channel.

4,063,184

SIGNAL TRANSFER CIRCUIT

Mitsuo Ohsawa, Fujisawa, Japan, assignor to Sony Corporation, Tokyo, Japan

Filed Sept. 27, 1976, Ser. No. 727,016

Claims priority, application Japan, Oct. 9, 1975, 50-122275

Int. Cl.^{2} H04B *1/16*

U.S. Cl. 328—221 7 Claims

1. A signal transfer circuit comprising:

a first loop including a first signal source providing an output signal which is composed of an AC signal component superimposed on a DC voltage, and a first resistor connected in series with said first signal source;

a second loop including a second signal source providing an output signal of substantially the same level as said output signal from the first signal source but of reversed polarity in respect to the latter, second and third resistors connected in series with said second signal source, and a

capacitor connected between a reference point and a connection point of said second resistor with said third resistor;
means connecting said first and second loops in parallel with each other at opposed connection points; and

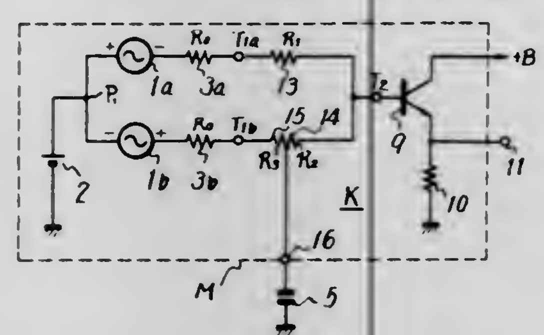

an output terminal connected with one of said connection points at which the first and second loops are connected in parallel.

4,063,185
DIRECT COUPLING TYPE POWER AMPLIFIER CIRCUIT
Shinichi Kojima, Mitaka, and Yoshio Sakamoto, Kokubunji, both of Japan, assignors to Hitachi, Ltd, Japan
Filed Feb. 8, 1977, Ser. No. 766,725
Claims priority, application Japan, Feb. 25, 1976, 51-18990
Int. Cl.² H03F *3/04*
U.S. Cl. 330—255 **19 Claims**

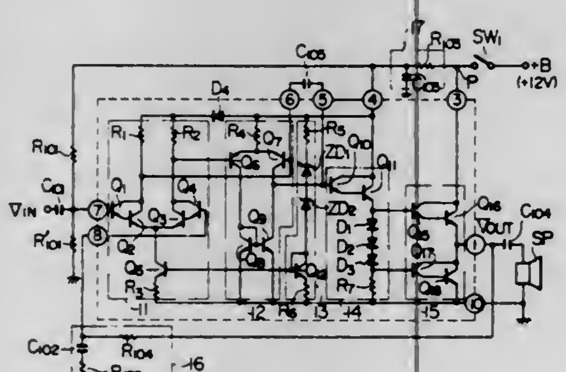

1. A direct coupling type power amplifier circuit comprising:
an input differential amplifier stage having first and second input electrodes, an input signal being supplied to said first input electrode;
a drive amplifier stage responsive to the output signal of said input differential amplifier stage dc-wise and ac-wise;
a push-pull output amplifier stage responsive to the output signal of said drive amplifier stage dc-wise and ac-wise;
a negative feedback circuit network coupled between said push-pull output amplifier stage and said second input electrode of said input differential amplifier stage, the output of said push-pull output amplifier stage being supplied to said second input electrode of said input differential amplifier stage through said negative feedback circuit network;
a bias circuit network coupled with said input differential amplifier stage for defining the dc bias current through said input differential amplifier stage, said bias circuit network including constant voltage means for providing a constant voltage; and
a delay circuit means coupled between said bias circuit network and a first power source voltage supply point to which a first power source voltage is supplied, said delay circuit means providing a predetermined delay time,
whereby the dc bias current through said input differential amplifier stage is cut off to hold the whole power amplifier circuit non-responsive to said input signal supplied to said first input electrode of said input differential amplifier stage during a predetermined time interval after the application of said first power source voltage to said first power source voltage supply point, said predetemined time interval being substantially determined by the delay time of said delay circuit means and the constant voltage of said constant voltage means in said bias circuit network.

4,063,186
BROADBAND MILLIMETER WAVE AMPLIFIER
David Rubin, San Diego, Calif., assignor to The United States of America as represented by the Secretary of the Navy, Washington, D.C.
Filed Oct. 10, 1975, Ser. No. 622,285
Int. Cl.² H03F *3/10*
U.S. Cl. 330—287 **10 Claims**

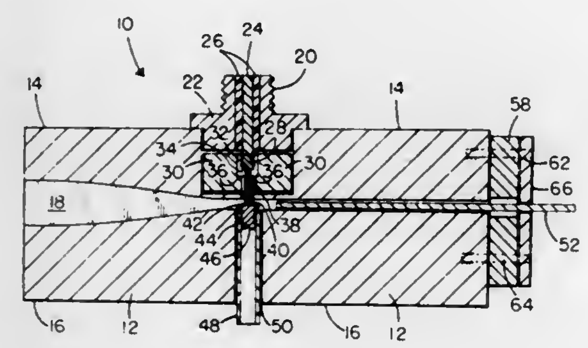

1. A millimeter wave amplifier comprising:
a reduced height waveguide section having top and bottom walls and a waveguide cavity;
a packaged two terminal negative resistance device having a heat sink integral therewith positioned intermediate said top and bottom walls;
first means secure to said two terminal negative resistance device for externally, selectively adjusting the depth of penetration of said heat sink into said cavity and for presenting said heat sink as a discontinuity to the propagation of energy waves within said cavity such that said heat sink can be positioned within said cavity at any required depth of penetration so as to effectuate cancellation of the parasitic reactances caused by said packaged two terminal negative resistance device.

4,063,187
EQUALIZER CIRCUIT
Henry John Orchard, Santa Monica, Calif., assignor to GTE Automatic Electric Laboratories Incorporated, Northlake, Ill.
Filed Dec. 4, 1975, Ser. No. 637,789
Int. Cl.² H03F *1/36*
U.S. Cl. 330—107 **11 Claims**

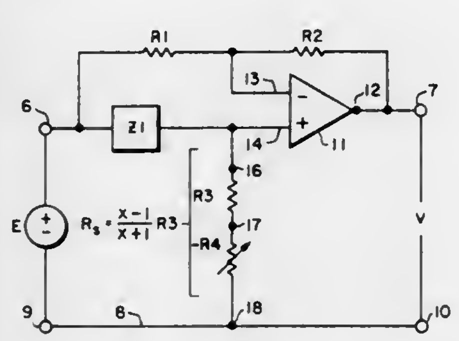

1. An active minimum-phase equalizer, which provides the special characteristics of a passive Bode equalizer circuit, said equalizer having input and output terminals and a common reference comprising:
a differential input operational amplifier having an output connected to said output terminal, and having first and second inputs;

a first impedance Z_1 connected between said input terminal and said amplifier first input;
a first resistor R_1 connected between said input terminal and said amplifier second input, and a second resistor R_2 connected between said amplifier output and said amplifier second input; and
a fixed resistance and a variable negative resistance connected in series between said amplifier first input and said common reference.

4,063,188
INJECTION-LOCKED VOLTAGE CONTROLLED OSCILLATORS
Daniel David Mawhinney, Livingston, N.J., assignor to RCA Corporation, New York, N.Y.
Filed Mar. 22, 1976, Ser. No. 668,907
Int. Cl.² H03B *3/04, 3/06*
U.S. Cl. 331—11 **6 Claims**

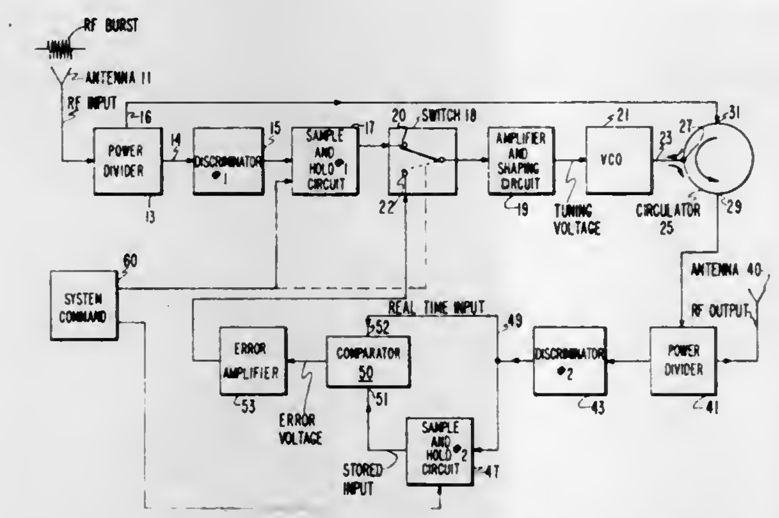

1. A system for generating an output RF signal at the same frequency as a received RF input signal comprising:
first means responsive to said input signal for power dividing said input signal to provide separate first and second power divided signals,
a voltage controlled RF oscillator,
second means including a discriminator coupled to said oscillator and responsive to said first power divided signals for providing a control voltage related to the frequency of an input signal to said voltge controlled oscillator whereby said oscillator is broadly tuned toward the frequency of said input signal,
said second means further including a sample and hold circuit coupled to the output of said discriminator for storing the control voltage provided therefrom, and
third means for coupling said second power divided signals directly to the RF portion of said voltage controlled oscillator in a manner to cause injection locking of said oscillator whereby said oscillator is locked exactly on the frequency of the said input signal when the control voltage causes said oscillator to be within the locking range.

4,063,189
LEAKY WAVE DIODE LASER
Donald R. Scifres, Los Altos; Robert D. Burnham, Los Altos Hills, and William Streifer, Palo Alto, all of Calif., assignors to Xerox Corporation, Stamford, Conn.
Filed Apr. 8, 1976, Ser. No. 674,692
Int. Cl.² H01S *3/19*
U.S. Cl. 331—94.5 H **9 Claims**

1. An electrically pumped heterojunction diode laser comprising:
a solid state body including a plurality of contiguous layers, one of said layers being an active region layer formed of a semiconductor material,
a carrier confinement layer on at least one side of said active region layer, said confinement layer being of a semiconductor material having an index of refraction lower than the index of refraction of the semiconductor material of said active region layer,
an additional layer of semiconductor material on the side of said confinement layer remote from said active region layer, the material of said additional layer having a higher refractive index than the material of said confinement layer, said additional layer being substantially thicker than both said confinement layer and said active region layer,
a rectifying junction within said semiconductor body adjacent said active region layer,
means for biasing said rectifying junction to provide for carrier injection across said rectifying junction with car-

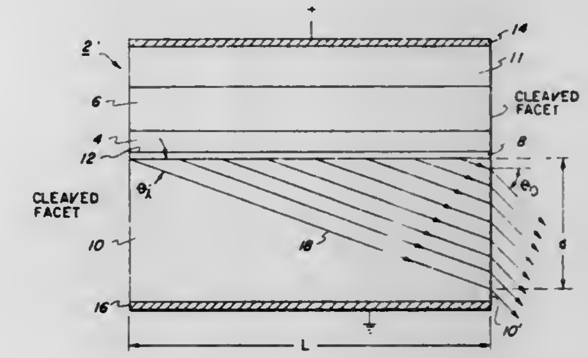

rier recombination in said active region layer providing for the generation of radiation of a given wavelength and mode pattern,
said confinement layer being sufficiently thin so that a portion of said mode pattern of said generated radiation extends into said additional layer to provide an unguided leaky wave in said additional layer, said leaky wave making an angle to said rectifying junction and being emitted from said body at an angle to said rectifying junction, and
the absorption coefficient of said additional layer being such that said leaky wave portion of said mode pattern is not attenuated substantially by said additional layer.

4,063,190
CO_2 LASER
John P. Rink, Los Alamos, N. Mex., assignor to The United States of America as represented by the United States Energy Research and Development Administration, Washington, D.C.
Filed Dec. 30, 1975, Ser. No. 645,168
Int. Cl.² H01S *3/223*
U.S. Cl. 331—94.5 G **5 Claims**

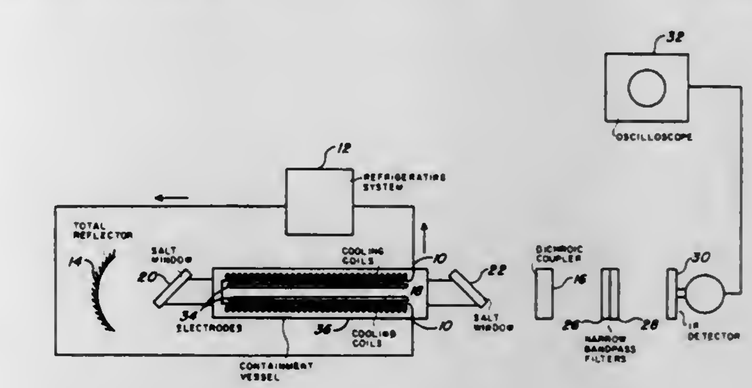

1. In a pulsed gas laser comprising an optical resonant cavity, a Co_2 lasing medium, means for comprising said CO_2 lasing medium within said optical cavity, and means for causing a population inversion in said lasing medium, an improvement comprising:
means for cooling the CO_2 lasers as to lower the number of CO_2 molecules already at the 010 level to obtain an inversion between the 100 and 020 energy levels and the 010 energy levels to provide a laser pulse comprising a wavelength of about 14 μm and about 16 μm.

4,063,191
XENON FLUORIDE LASER UTILIZING NITROGEN TRIFLUORIDE AS A FLUORINE DONOR
Earl Rema Ault, Rolling Hills Estates; Robert Spencer Bradford, Jr., Los Angeles; Mani Lal Bhaumik, Malibu, and Danny Doyce Floyd, Carson, all of Calif., assignors to Northrop Corporation, Los Angeles, Calif.
Filed June 7, 1976, Ser. No. 693,710
Int. Cl.[2] H01S *3/00*
U.S. Cl. 331—94.5 G **5 Claims**

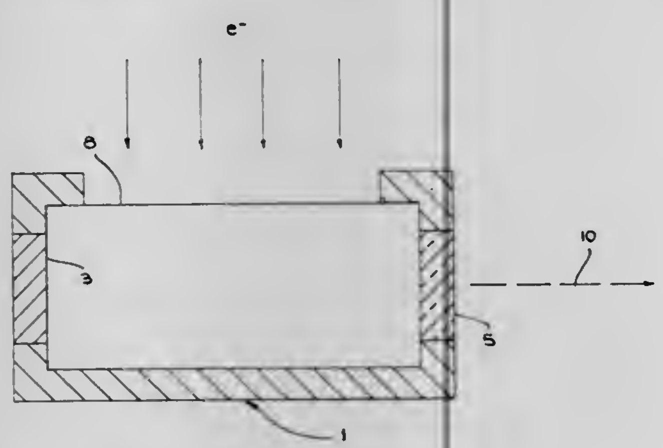

1. An XeF gas laser comprising:
a gas chamber,
a pair of reflectors, one of which is only partially reflective, positioned opposite each other to define a laser oscillator cavity which passes through the chamber,
a gas mixture comprising Ar, Xe, and NF_3 being fed to said chamber, and
laser pump means for exciting said gas mixture, said NF_3 operating as a flourine donor to the Xe to form XeF, the pump means effecting a population inversion in the XeF whereby XeF laser emission passes through said partial reflector.

4,063,192
KRYPTON FLUORIDE EXCIMER LASER UTILIZING NITROGEN TRIFLUORIDE AS A FLUORINE DONOR
Mani Lal Bhaumik, Malibu; Robert Spencer Bradford, Jr., Los Angeles; Earl Rema Ault, Rolling Hills Estates, and Philip Clyde Stevens, Redondo Beach, all of Calif., assignors to Northrop Corporation, Los Angeles, Calif.
Filed June 7, 1976, Ser. No. 693,709
Int. Cl.[2] H01S *3/00*
U.S. Cl. 331—94.5 G **5 Claims**

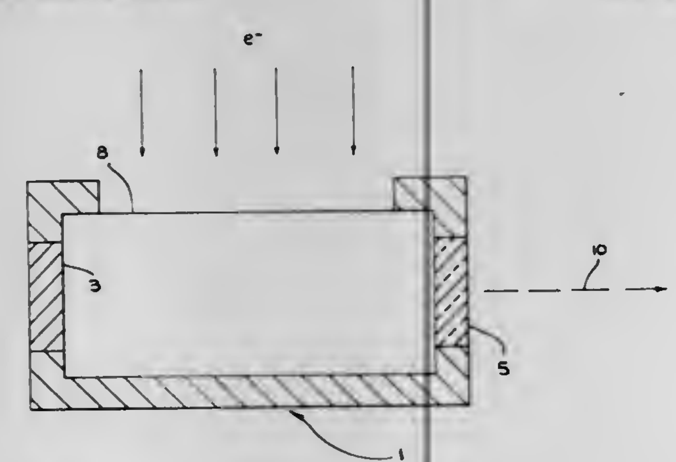

1. A KrF laser comprising:
a gas chamber,
a pair of reflectors, one of which is only partially reflective, positioned opposite each other to define a laser ocsillator cavity which passes through the chamber,
a gas mixture comprising Ar, Kr and NF_3 being fed to said chamber, and
laser pump means for exciting the gas mixture, the NF_3 operating as a fluorine donor to the Kr to form KrF, the pump means effecting a population inversion in the KrF whereby KrF laser emission passes through said partial reflector.

4,063,193
DIFFERENTIAL TRANSISTOR PAIR INTEGRATED CIRCUIT OSCILLATOR WITH L-C TANK CIRCUIT
Milton E. Wilcox, San Jose, Calif., assignor to National Semiconductor Corporation, Santa Clara, Calif.
Filed Oct. 12, 1976, Ser. No. 731,167
Int. Cl.[2] H03B *5/12*
U.S. Cl. 331—117 R **6 Claims**

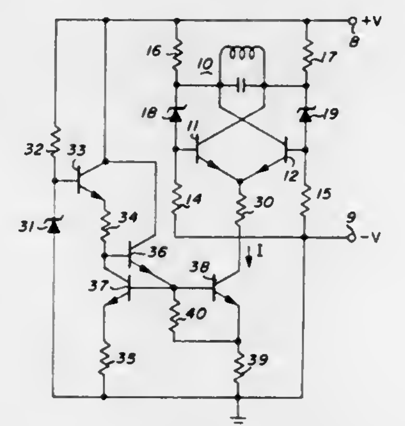

1. A transistor oscillator suitable for incorporation into a bipolar integrated circuit in which the frequency of oscillation is determined by an externally connected antiresonant tank circuit, and adapted to operate from a single source of operating potential, said circuit comprising:
a pair of transistors, the emitters of said pair being coupled together and coupled through conductive impedance means to a first terminal for connection to said source of operating potential, the collectors of said pair being coupled to terminals adapted for connection to said tank circuit, conductive impedance means coupling said collectors to a second terminal for connection to said source of operating potential, and the bases of said pair being coupled through a current mirror to said first terminal of said source of operating potential, said current mirror operative to equalize the currents flowing in the two branches thereof coupled to said bases of said pair of transistors;

5. An integrated circuit oscillator adapted to operate from a source of operating potential and an extremely connected anti-resonant tank, said circuit comprising
a pair of transistors coupled together to function as a differential pair, said collectors of said pair being coupled to terminals adapted for connection to said tank and to means for coupling said collectors to one terminal of said potential source, said bases of said pair being coupled to means for biasing said pair;
a pair of zener diodes cross coupled between the collectors and bases of said pair to provide positive feedback coupling in said pair, said diodes poled to operate in reverse breakdown responsive to said biasing means;
a current source transistor having a collector coupled to the emitters of said pair of transistors and an emitter coupled to the other terminal of said potential source; and
means for biasing said current source transistor to produce a collector current that rises with temperature to stabilize the gain of said pair.

4,063,194
WIDE-BAND FREQUENCY-CONTROLLED CRYSTAL OSCILLATOR
Jacques Helle, Sartrouville, France, assignor to Compagnie d'Electronique et de Piezo-Electricite, Sartrouville, France
Filed Nov. 3, 1976, Ser. No. 738,593
Claims priority, application France, Nov. 7, 1975, 75.34163
Int. Cl.[2] H03B *5/32*
U.S. Cl. 331—162 **4 Claims**

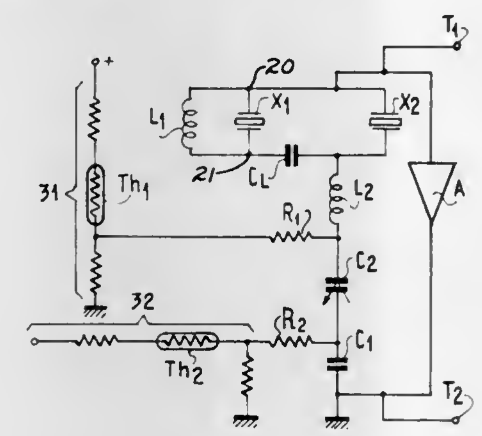

1. A wide-band frequency-controlled crystal oscillator, consisting, of an oscillating circuit in the form of a feedback loop, comprising an amplifier (A), a first element (C_2) having variable reactance in dependence upon electrical quantities or signals, and a second element oscillating with a high Q-factor, wherein said second element is formed by two piezoelectric crystals (X_1) (X_2) connected in parallel through a connecting capacitor (C_l), these two crystals having resonance frequencies respectively above the below those of said wide band.

4,063,195
PARAMETRIC FREQUENCY CONVERTER
Richard L. Abrams, Pacific Palisades, and Amnon Yariv, San Marino, both of Calif., assignors to Hughes Aircraft Company, Culver City, Calif.
Filed Mar. 26, 1976, Ser. No. 670,601
Int. Cl.[2] H01S *3/22;* H03F *7/02*
U.S. Cl. 332—7.51 **18 Claims**

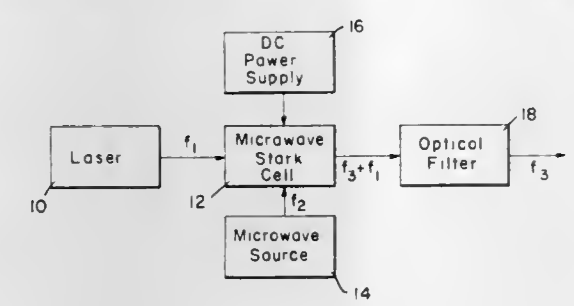

1. A parametric frequency converter comprising:
a cell containing a fluid the elementary particles of which have an energy level system including three energy levels, said energy level system being such that normally electric dipole transitions involving two of the three paired combinations of said energy levels are allowed but electric dipole transitions involving the third paired combination of said energy levels are forbidden by symmetry;
means for generating a dc electric field within said cell producing sufficient mixing of one of the energy levels of said third paired combination with the energy level not in said third paired combination such that electric dipole transitions are allowed in all of the paired combinations of said three energy levels;
means for introducing into said cell electromagnetic radiation at a first frequency corresponding substantially to the energy difference between two of said three energy levels; and
means for introducing into said cell electromagnetic radiation at a second frequency corresponding substantially to the energy difference between one of said two energy levels and the third energy level, whereby parametric frequency mixing occurs in said fluid to produce electromagnetic radiation at a third frequency corresponding substantially to the energy difference between the other of said two energy levels and said third energy level.

4,063,196
PLURAL OSCILLATOR PHASE CONTINUOUS FREQUENCY ENCODER
Elden Roger Larson, Bloomington, and Robert Donald Dreher, Roseville, both of Minn., assignors to Control Data Corporation, Minneapolis, Minn.
Filed Nov. 12, 1976, Ser. No. 741,321
Int. Cl.[2] H03C *3/02*
U.S. Cl. 332—16 T **6 Claims**

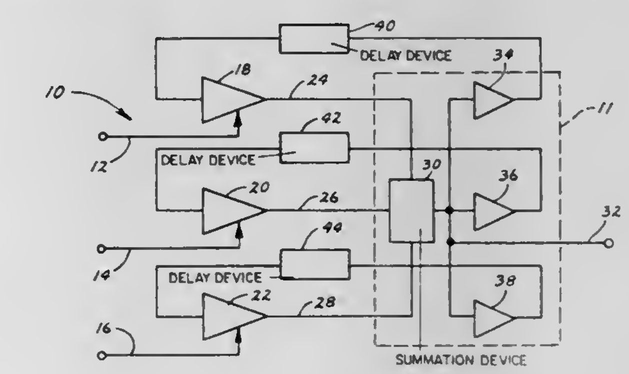

4. A data encoder comprising:
at least three oscillators, each oscillator responsive to an input control signal to produce an output signal and each oscillator having a different primary frequency,
each of said oscillators including a feedback means and a feedback amplifier, each feedback amplifier having as an input a signal comprising the electrical sum of the outputs of all of said oscillators, said input being electrically isolated from the output of said feedback amplifier, the output of said feedback amplifier being connected through said feedback means to the associated oscillator, and,
means for electrically summing the output signals of all of said oscillators to produce an output signal for said encoder.

4,063,197
PLURAL TRANSISTOR OSCILLATOR PHASE CONTINUOUS FREQUENCY ENCODER CIRCUIT
Robert Donald Dreher, Roseville, Minn., assignor to Control Data Corporation, Minneapolis, Minn.
Filed Nov. 12, 1976, Ser. No. 741,322
Int. Cl.[2] H03C *3/02*
U.S. Cl. 332—16 T **13 Claims**

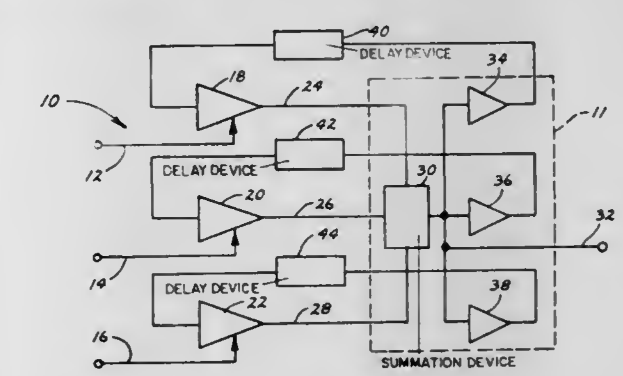

1. A frequency modulation encoder circuit comprising:
a least three differential amplifiers, each of said amplifiers being comprised of at least two transistors,

a plurality of switch means for individually activating and deactivating each of said differential amplifiers,
means for electrically summing an output signal from the collector of one of the transistors comprising each differential amplifier to form an output signal for said circuit,
a plurality of common base, emitter coupled, transistor feedback amplifiers, one of said feedback amplifiers being associated with each of said differential amplifiers,
means for supplying to the emitter connection of each of said feedback amplifiers an input signal comprised of the electrical sum of the signals appearing at the collectors of another of the transistors in each of the differential amplifiers, and
feedback means for supplying a feedback signal from the output of each of said feedback amplifiers to an input of the differential amplifier associated therewith to provide oscillation wherein said feedback means determines the frequency of oscillation.

4,063,198
ACOUSTIC RIDGE INTERACTIVE STRUCTURE
Robert S. Wagers, Richardson, and Clinton S. Hartmann, Dallas, both of Tex., assignors to Texas Instruments Incorporated, Dallas, Tex.
Division of Ser. No. 451,718, March 14, 1974, Pat. No. 3,974,464. This application May 12, 1976, Ser. No. 685,572
Int. Cl.² H03H *9/26, 9/30, 9/02;* **H01L** *41/04*
U.S. Cl. 333—30 R **5 Claims**

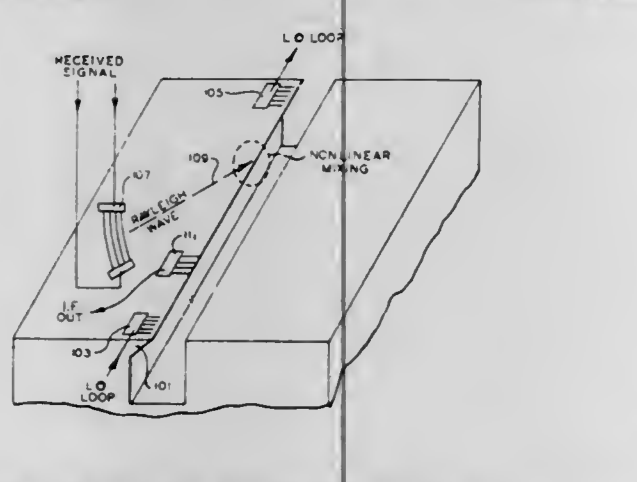

1. An interactive acoustic structure comprising:
a horizontal ledge having at least a top surface portion thereof made of piezoelectric material, said ledge extending outwardly from said substrate with the top surface portion of said ledge being coplanar with the top surface of said substate, said substate and said ledge defining an acoustic waveguide;
means disposed on said substate for exciting a tightly confined acoustic wave in the ledge of said waveguide at one frequency;
means disposed on said ledge for exciting an acoustic wave in said waveguide at a second frequency whereby said two frequencies will mix; and
an output transducer on said waveguide responsive to one of the sum and difference of the two input frequencies.

4,063,199
RADIO FREQUENCY PULSE WIDTH AMPLITUDE MODULATION SYSTEM
Leonard Lewis Oursler, Jr., Canonsburg, Pa., assignor to RCA Corporation, New York, N.Y.
Filed Feb. 10, 1977, Ser. No. 767,478
Int. Cl.² H03C *1/00*
U.S. Cl. 332—41 **5 Claims**

1. A system for amplitude modulating a carrier frequency signal in accordance with a modulating signal having a maximum frequency of f_m, said system comprising:
converting means responsive to said signal for generating an output signal which is the arc sine of said modulating signal:
carrier generator means for generating a carrier signal having a substantially triangular waveform at said carrier frequency f_c;
pulse width modulation means responsive to said carrier signal and said converting means output signal for generating a pulse width modulated signal,

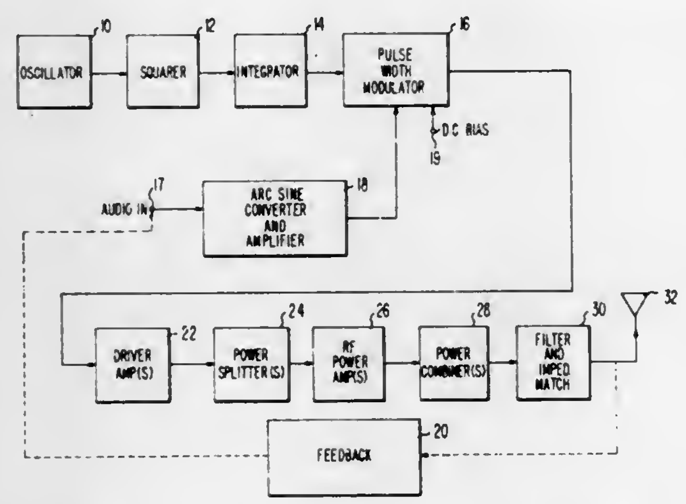

band pass filtering means responsive to said pulse width modulated signal for passing only signals from $f_c - f_m$ to $f_c + f_m$ with low attenuation whereby said carrier frequency is amplitude modulated by said modulating signal.

4,063,200
HYBRID MULTIPLEXED FILTER
John Mattern, Baltimore, Md., assignor to Westinghouse Electric Corporation, Pittsburgh, Pa.
Filed Feb. 10, 1976, Ser. No. 656,911
Int. Cl.² H03H *7/10, 7/28;* **H03K** *5/159;* **H04J** *3/06*
U.S. Cl. 333—70 A **9 Claims**

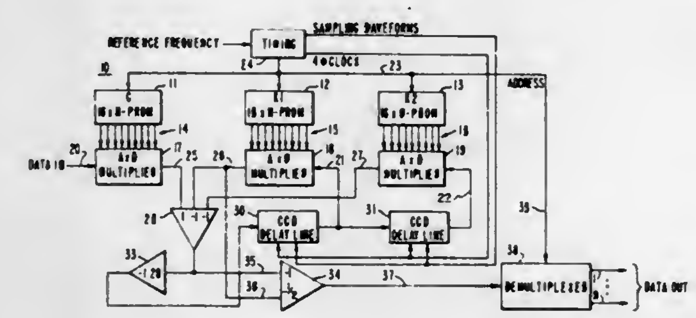

1. A multiplexed recursive filter, comprising
an analog delay line having a plurality of data sampling stages including input and output stages,
means to transfer serially a predetermined number of discrete voltage samples through the delay line stages from the input to the output stages within one of repetitive predetermined time periods,
means including digital storage and sequencing means to store and output a number of predetermined constants,
means including analog by digital multiplication means to weigh each of the discrete voltage samples with one of said predetermined constants serially within each one of said repetitive time periods to produce weighted voltage samples, and
demultiplexing means to output each one of the weighted voltage samples on a separate channel.

4,063,201
PRINTED CIRCUIT WITH INDUCTIVELY COUPLED PRINTED COIL ELEMENTS AND A PRINTED ELEMENT FORMING A MUTUAL INDUCTANCE THEREWITH
Michimasa Komatsubara; Toshihiko Waku, both of Tokyo; Tetsuya Fukai, Yokohama, and Akito Satsuka, Fujisawa, all of Japan, assignors to Sony Corporation and Soshin Electric Company Limited, both of, Japan
Filed June 12, 1974, Ser. No. 478,534
Claims priority, application Japan, June 16, 1973, 48-71319; June 16, 1973, 48-71320
Int. Cl.² H03H *7/08, 13/00;* **H01G** *4/40;* **H01F** *27/40*
U.S. Cl. 333—70 R **7 Claims**

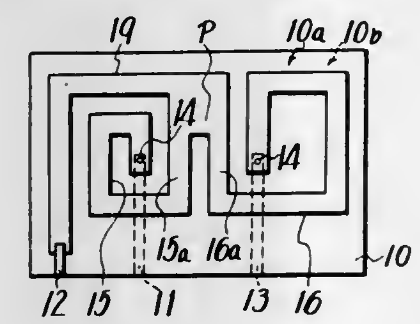

1. A printed circuit adapted to function as a bandpass filter for a selected band of frequencies comprising:
a. a first conductor formed as a first inductance element on an insulating plate;
a second conductor formed as a second inductance element on said insulating plate electromagnetically coupled to said first inductance element; one end of each of said first and second inductance elements being connected at a common point, the other ends of said first and second inductance elements being connected to first and second input and output terminals respectively; and
c. a common conductor formed as a third inductance element connected at one end to said common point of said first and second inductance element on said insulating plate, and the other end being connected to a ground terminal, whereby said common conductor inductance element determines the mutual inductance of the printed circuit.

4,063,202
BAND-PASS FILTER WITH SURFACE ACOUSTIC WAVE DEVICES
Carmine F. Vasile, Thousand Oaks, Calif., assignor to Rockwell International Corporation, El Segundo, Calif.
Filed May 5, 1976, Ser. No. 683,608
Int. Cl.² H03H *9/26, 9/32, 13/00*
U.S. Cl. 333—72 **28 Claims**

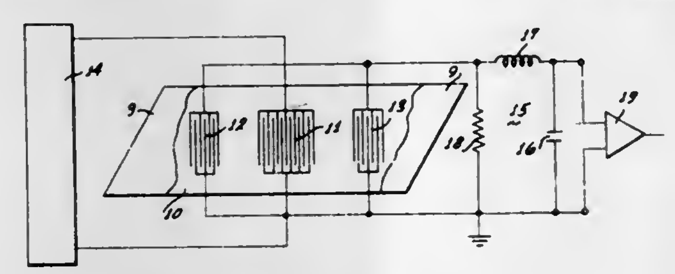

5. An electric band pass filter comprising:
a surface acoustic wave filter having a transmitting transducer coupled to a piezoelectric substrate for launching acoustic surface waves therein, further having a receiving transducer coupled to said substrate for receiving said surface waves; and
circuit means connected to at least one of said transducers for establishing short circuit load impedance across said transducer, for a frequency in the pass band of said filter, for inhibiting the one transducer from launching surface waves in response to electrical signals generated in the one transducer in response to any surface waves received.

4,063,203
REED SWITCH
Kazushi Fujiwara; Mituyuki Asai, and Susumu Aoki, all of Kitakyushu, Japan, assignors to Kabushiki Kaisha Yaskawa Denki Seisakusho, Japan
Filed Apr. 7, 1976, Ser. No. 674,563
Claims priority, application Japan, Apr. 15, 1975, 50-45590
Int. Cl.² H01H *51/28*
U.S. Cl. 335—154 **2 Claims**

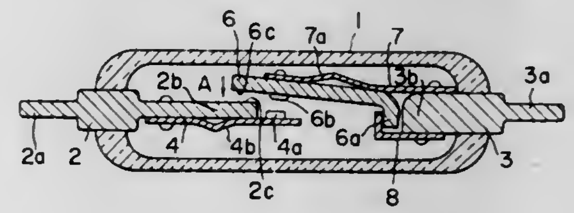

1. A reed switch comprising:
a. a protective envelope of non-magnetic material;
b. a first stationary terminal of magnetic material provided at one end of said envelope in such a manner that said first stationary terminal is penetrated into said envelope to have internal and external terminal portions, said first stationary terminal being fixed and sealed at said one end of said envelope;
c. a second stationary terminal of magnetic material provided at the other end of said envelope in such a manner that said second stationary terminal is penetrated into said envelope to have internal and external terminal portions, said first stationary terminal being fixed and sealed at said other end of said envelope;
d. a resilient contact member support, at one end, on the internal terminal portion of said first stationary terminal and extended along said internal terminal portion of said first stationary terminal, said resilient contact member have a contact on the other end thereof;
e. a supporting member of electrically conductive elastic material supported at one end on the internal terminal portion of said second stationary terminal and extended toward said first stationary terminal;
f. a movable member of magnetic material extended in parallel with said supporting member, one end portion of said movable member having a first end face which is larger in sectional area than the other portion of said movable member and which is opposed to a second end face of the internal terminal portion of said second stationary terminal, said second end face being larger in sectional area than the other portion of said second stationary terminal, the other end portion of said movable member being opposed to the internal terminal portion of said first stationary terminal with a magnetic gap therebetween; and
g. a movable contact having a movable contact surface which effects on-off operation with said stationary contact, said movable contact fixedly securing said movable member to said supporting member.

4,063,204
ENERGY ABSORBING AND PRESSURE APPLYING ARRANGEMENT FOR ELECTRICAL CONTACTS
William B. McFarlin, Wauwatosa, Wis., assignor to Allis-Chalmers Corporation, Milwaukee, Wis.
Continuation of Ser. No. 591,281, June 30, 1975, abandoned. This application Feb. 28, 1977, Ser. No. 772,766
Int. Cl.² H01H *3/60*
U.S. Cl. 335—193 **16 Claims**

1. An electric switch comprising a stationary contact and a movable contact engageable with said stationary contact to complete an electrical circuit through said contacts, a switch

operating member, pressure applying means operatively associated with said switch operating member and with said movable contact and so positioned as to transmit force between said switch operating member and said movable contact, said pressure applying means being engageable with said movable contact and being operated by said switch operating member to move said movable contact into engagement with said stationary contact and to hold said movable contact in pressurized engagement with said stationary contact, said pressure applying means comprising an energy absorbing means having

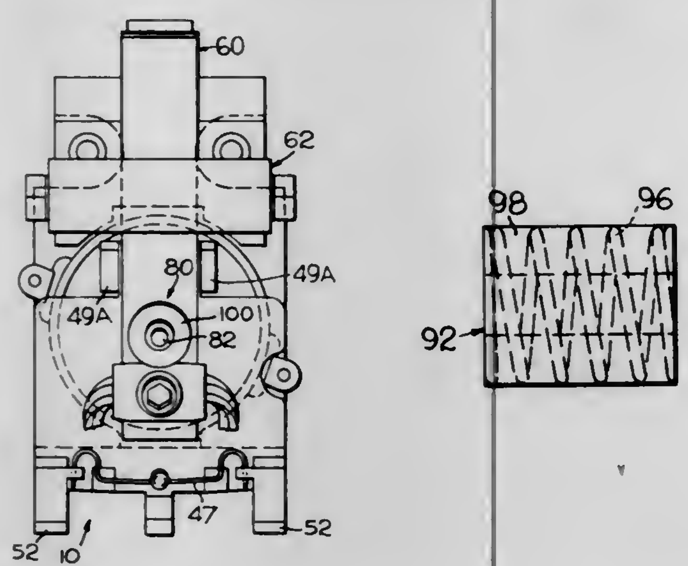

substantial elastic hysteresis which minimizes bounce of said movable contact relative to said stationary contact upon closure of said contacts, said pressure applying means additionally comprising resilient spring means having low elastic hysteresis and structurally interrelated with said energy absorbing means to form a composite spring, said energy absorbing means and said resilient spring means acting in aiding relation to each other and being deformed simultaneously with each other by movement of said switch operating member to hold said movable contact in pressurized engagement with said stationary contact.

4,063,205
PRINTED WIRING CARD MOUNTABLE REED RELAY
Sigitas Miknaitis, Clarendon Hills, Ill., assignor to GTE Automatic Electric Laboratories Incorporated, Northlake, Ill.
Filed May 25, 1976, Ser. No. 689,880
Int. Cl.[2] H01H *9/02, 51/28*
U.S. Cl. 335—202 **9 Claims**

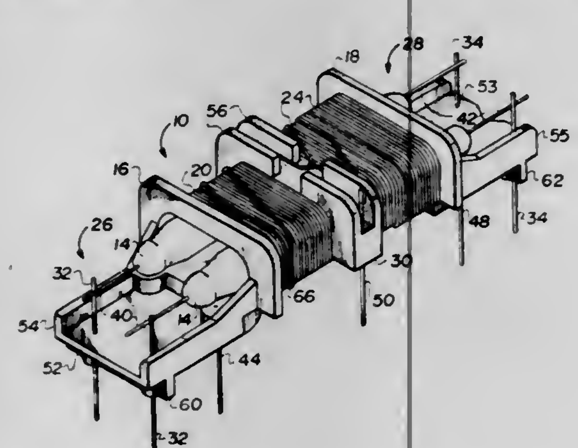

1. A reed relay comprising:
an insulative bobbin having a longitudinal channel therein, a first circumferential flange formed at a first end of the bobbin, a second circumferential flange formed at a second end of the bobbin, a first base portion formed at the first circumferential flange, a second base portion formed at the second circumferential flange, and a circumferential spacer formed at the substantial midpoint of the bobbin, the circumferential spacer and the first circumferential flange serving to define a first coil receiving bobbin portion and the circumferential spacer and the second circumferential flange serving to define a second coil receiving bobbin portion;
a first electrically conductive terminal disposed through the first base portion and extending from a first end at the top of the first base portion and from a second end at the bottom of the base portion;
a second electrically conductive terminal disposed through the second base portion and extending from a first end at the top of the second base portion and extending from a second end at the bottom of the second base portion;
an encapsulated reed switch disposed in the longitudinal channel having a first electrical lead connected to the first end of the first electrically conductive terminal and a second electrical lead connected to the first end of the second electrically conductive terminal;
a plurality of coils wound about the bobbin including at least a first coil disposed about the first coil receiving bobbin portion; and
means for connecting the coils.

4,063,206
TUNABLE ELECTRICAL COMPONENT
Edgar Walker, III, Lot No. 16, Cedar Lake Village, Mount Washington, Ky. 40047
Filed Aug. 16, 1976, Ser. No. 714,478
Int. Cl.[2] H01F *29/02*
U.S. Cl. 336—45 **11 Claims**

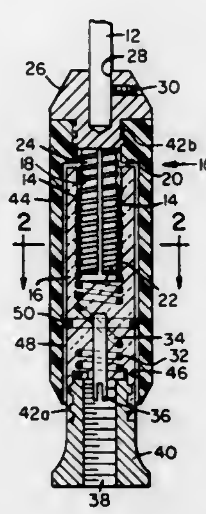

1. An electrical component comprising
a first coil of electrically conductive material having a plurality of windings,
an adjustable shorting screw disposed in line with the longitudinal axis of said coil, said shorting screw being adapted to rotate on at least a portion of said windings and translate along said longitudinal axis to vary the electrical inductance of said coil,
a mass of dielectric material defining a generally cylindrically shaped hollow shaft therein opening onto one end of said mass, at least a portion of said first coil being partially embedded in said mass around the defining wall of said shaft, said screw being adapted to translate at least partially into and out of said shaft and first coil, and
a rotatable sleeve defining a hollow cylindrically shaped chamber therein opening onto one end of said sleeve, said mass having a cylindrically shaped surface adapted to fit at least partially in said chamber in relatively close conforming rotatable relation therewith, said screw being attached to the other end of said sleeve.

4,063,207
COIL STRUCTURE
Howard E. Williams, Reseda, Calif., assignor to Litton Systems, Inc., Woodland Hills, Calif.
Filed Jan. 31, 1977, Ser. No. 764,399
Int. Cl.[2] H01F *27/30*
U.S. Cl. 336—171 **13 Claims**

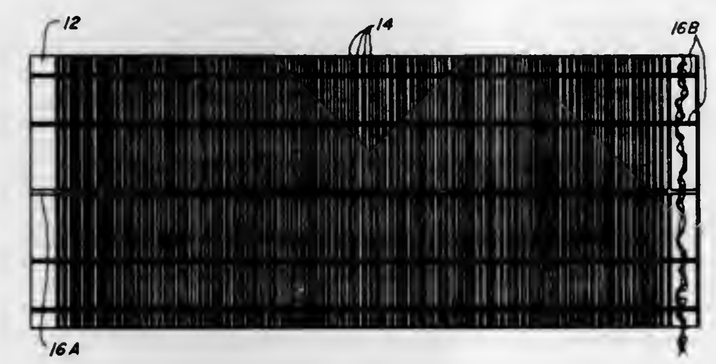

1. In a coil structure for applying a strong magnetic field in a predetermined direction, and weaker magnetic field in two additional mutually orthogonal directions:
a generally cylindrical coil form, said coil form having a plurality of peripheral grooves along its length, and a plurality of longitudinal grooves extending parallel to the axis of said form along the outer surface of said form;
first coil means including wires wound in said peripheral grooves for providing strong magnetic coupling along the axis of said coil form;
second coil means including a wire extending down at least one of said longitudinal grooves and back in another of said longitudinal grooves for providing weak magnetic coupling in a first transverse direction perpendicular to the axis of said coil form, and
third coil means including a wire extending down one of said longitudinal grooves and back in another for providing weak magnetic coupling perpendicular the axis of said coil form, and at an angle with respect to said first transverse direction.

4,063,208
FUSE HOUSING END CAPS SECURED BY MAGNETIC PULSE FORMING
Joseph Bernatt, Arlington Heights, Ill., assignor to S & C Electric Company, Chicago, Ill.
Filed Nov. 19, 1975, Ser. No. 633,488
Int. Cl.[2] H01H *85/14*
U.S. Cl. 337—248 **13 Claims**

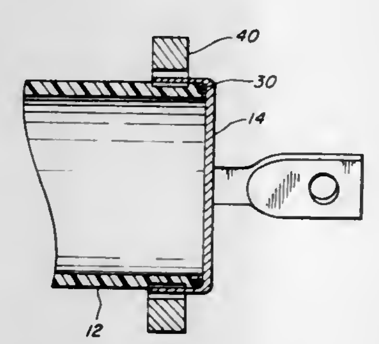

1. An electrical fuse comprising:
a cylindrical hollow housing formed of a non-metallic, low compressive stress resistant, electrically insulating material, said housing having opposite open ends and an annular recess formed adjacent each end on the exterior of said housing;
first and second end members each comprising:
a circular end wall having a first thickness sufficient to withstand mechanical stress incident to mounting and operation of said fuse;
an annular flange formed integrally with said circular end wall along the edge thereof and extending approximately perpendicular thereto, said flange having a second thickness less than the first thickness:
said first and second end members positioned over the opposite open ends of said housing, the annular flanges being compressed into the annular recesses formed in said housing by magnetic pulse forming to attach and seal said first and second end members over the open ends of said housing;
said second thickness being thin enough to permit said annular flanges to be compressed by magnetic pulse forming without causing damage to said housing;
a current responsive element connected between said first and second end members.

4,063,209
INTEGRAL TRANSDUCER ASSEMBLIES EMPLOYING BUILT-IN PRESSURE LIMITING
Anthony D. Kurtz, Englewood, and Joseph R. Mallon, Alpine, both of N.J., assignors to Kulite Semiconductor Products Inc., Ridgefield, N.J.
Filed May 1, 1975, Ser. No. 573,624
Int. Cl.[2] G01L *1/22*
U.S. Cl. 338—4 **14 Claims**

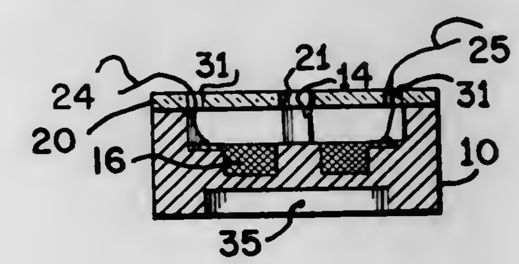

1. An electromechanical transducer for responding to the magnitude of an applied force, comprising:
a. a semiconductor member having a depression of a predetermined depth located on a first surface thereof,
b. at least one piezoresistive element diffused within said depression and located relatively centrally and comprising a given line configuration having a line width selected in accordance to said predetermined depth,
c. pressure limiting means including a layer of glass coupled to said semiconductor member to cover said depression to restrain said semiconductor material containing said element from moving beyond said pressure limiting means.

4,063,210
TEMPERATURE INDEPENDENT SEMICONDUCTOR RESISTOR AND METHOD OF MAKING SAME
Michael W. Collver, Sterling Heights, Mich., assignor to General Motors Corporation, Detroit, Mich.
Filed Feb. 17, 1976, Ser. No. 658,846
Int. Cl.[2] H01C *7/02*
U.S. Cl. 338—7 **6 Claims**

3. An electrical resistor that is substantially constant in its resistance throughout a temperature range of about 4° – 373° Kelvin, said resistor comprising:
a substrate having a surface;
a layer of polycrystalline semiconductive material selected from the group consisting of silicon and germanium on said surface, said layer having substantially only one crystalline phase and the crystals forming that phase having a grain size of about 500 – 10,000 angstroms; 'atoms of a deep level dopant dispersed in supersaturated solid solution within said crystals in a concentration within about 10 – 18 atomic percent and being within about 1 atomic percent of a metal-semiconductor transition concentration with respect to electrical characteristics;
said deep level dopant having an activation energy greater than about 0.1 electron volt, when at room temperature and at

concentrations below its normal limit of solid solubility in said semiconductive material; and
means for passing electrical current though said layer.

4,063,211
METHOD FOR MANUFACTURING STABLE METAL THIN FILM RESISTORS COMPRISING SPUTTERED ALLOY OF TANTALUM AND SILICON AND PRODUCT RESULTING THEREFROM
Nobuo Yasujima, Kawagoe; Natsuo Itokawa, Manba, and Juichiro Arai, Matsudo, all of Japan, assignors to Taisei Denski Kabushiki Kaisha, Manba and Nobuo Yasujima, Kawagoe, both of, Japan
Continuation-in-part of Ser. No. 422,920, Dec. 7, 1973, abandoned. This application Oct. 1, 1975, Ser. No. 618,618
Claims priority, application Japan, Oct. 9, 1972, 47-123046
Int. Cl.² H01C *1/012;* **C23C** *15/00*
U.S. Cl. 338—308 **6 Claims**

1. A method for manufacturing a stable metal thin film resistor comprising:
a. sputtering tantalum-silicon upon a substrate to form an amorphous tantalum-silicon alloy film containing from 50 to 72 atomic percent of silicon, and
b. completely crystallizing the sputtered amorphous film by heat-treating the same at a temperature within the range of 500°-750° C. for a time period ranging from 1 to 60 minutes in an ambient atmosphere selected from the group consisting of air and an oxidizing gas.

4,063,212
SIDE SCAN SONAR SYSTEM
Kenneth L. Sublett, Seattle, Wash., assignor to Western Marine Electronics, Inc., Seattle, Wash.
Filed May 19, 1976, Ser. No. 687,990
Int. Cl.² G05B *19/40;* **G01D** *19/38, 15/28;* **G01S** *9/66*
U.S. Cl. 340—3 F **16 Claims**

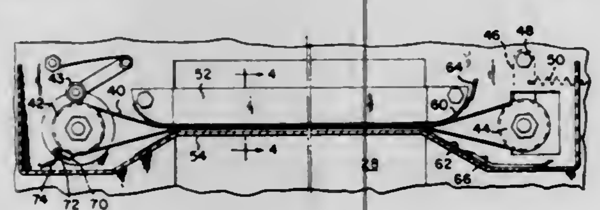

2. A side scan sonar system for recording images of topographical features on an ocean floor, comprising:
a side looking port transducer and a side looking starboard transducer each having a relatively narrow beam in a horizontal plane and a relatively wide beam in a vertical plane;
port and starboard transmitter means for driving said port and starboard transducers, respectively, upon receipt of respective port and starboard transmit initiate signals thereby propagating acoustic waves from said transducers;
port and starboard receiver means connected to said transducers for detecting reflections of said acoustic wave from respective port and starboard topographical features, and for producing respective port and starboard data signals in response thereto;
a strip of a recording medium adapted to move in a longitudinal direction;
a continuous belt carrying at least one writing stylus extending transversely across said recording medium;
a belt drive wheel engaging said belt at one end thereof such that rotation of said drive wheel circulates said belt;
a stepping motor operatively connected to said drive wheel, said motor rotating at a speed corresponding to the frequency of sequenced pulses applied to at least three input lines;
an oscillator generating a clock signal having a constant frequency;
a phase-lock loop having a voltage controlled oscillator for generating drive pulses, said voltage controlled oscillator operating at a frequency determined by a control voltage which is, in turn, determined by a phase comparison between said drive pulses and a reference signal derived from said clock signal;
loop control means for selectively reducing the operating frequency of said voltage controlled oscillator below the frequency of said reference signal such that said stepping motor initially operates at a relatively low speed before increasing to a constant operating speed responsive to the frequency of said voltage controlled oscillator increasing to equal the frequency of said reference signal when said phase-lock loop is locked;
pulse sequencing means for generating a sequence of pulses on said stepping motor input lines responsive to said drive pulses, the frequency of said sequence of pulses being proportional to the frequency of said drive pulses such that said belt circulates at a speed determined by the frequency of said clock signal and the manner in which said clock signal is processed by said signal processing means to generate said drive pulses; and
control means for generating said transmit initiate signals when said belt is at a predetermined position, and for allowing a writing stylus to record said port data signal when said stylus is moving across said recording medium in one transverse direction and for allowing a writing stylus to record said starboard data signal when said stylus is moving across said recording medium in the other transverse direction such that said topographical features are recorded in a manner which realistically simulates the spatial relationships between the topographical features and said transducers.

4,063,213
METHODS FOR ACCURATELY POSITIONING A SEISMIC ENERGY SOURCE WHILE RECORDING SEISMIC DATA
Oswald A. Itria, Bellaire, and James D. Todd, Houston, both of Tex., assignors to Texaco Inc., New York, N.Y.
Filed June 28, 1976, Ser. No. 700,674
Int. Cl.² H04R *15/00;* **G01V** *1/00*
U.S. Cl. 340—7 PC **9 Claims**

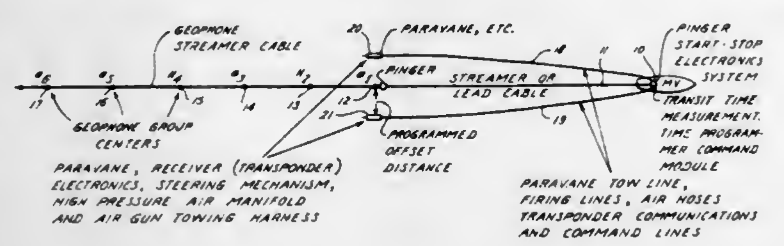

1. While recording offshore marine seismic reflection data from a seismic tow system including a tow vessel for towing both a submerged geophone streamer cable having at least one geophone thereon and a steerable paravane supporting a seismic energy source positioned laterally from the geophone, in a method for maintaining the steerable paravane supported seismic energy source positioned laterally at a precise predetermined fixed distance from the geophone, the improvements which comprise,
a. transmitting and receiving signals between the steerable paravane and the geophone,
b. measuring the precise distance between the steerable paravane and the geophone from the above signals,
c. generating corrective steering signals relative to the amount and direction that the instant precise distance is from the predetermined fixed distance, and
d. transmitting said corrective steering signals to the steerable paravane for maintaining the seismic energy source spaced from the geophone at the precise predetermined fixed distance for producing the most accurate seismic velocity measurements.

4,063,214
LENS TRANSDUCER FOR USE IN MARINE SONAR DOPPLER APPARATUS
Jacob A. Kritz, Westbury, N.Y., assignor to Sperry Rand Corporation, New York, N.Y.
Filed Dec. 15, 1975, Ser. No. 640,604
Int. Cl.² H04B *13/00*
U.S. Cl. 340—8 L **1 Claim**

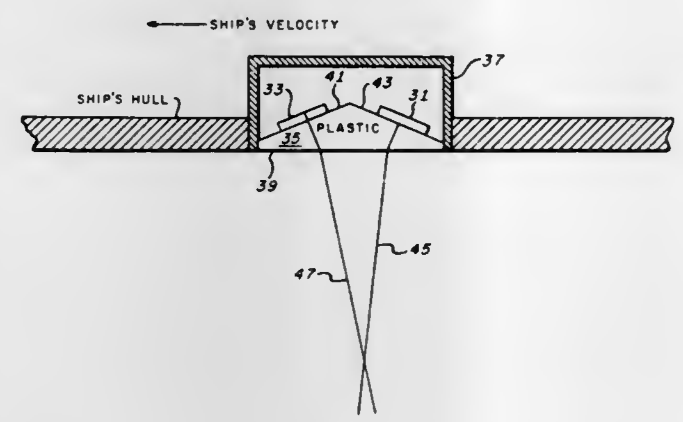

1. A lens transducer for use in a marine vessel's sonar doppler system of the Janus type, said transducer comprising electro-acoustic energy transformation means for radiating and receiving acoustic energy and acoustic lens means, said energy transformation means being of a type having a beam pattern comprising a primary lobe along a preferred axis and secondary lobes along divergent axes, said lens means being in the form of a pyramid and having an external face adapted to be mounted in an aperture in a vessel's hull and internal faces disposed angularly with respect to said external face, said transformation means including first and second transformation elements for producing forward-looking and aft-looking acoustic beams, respectively, and being mounted on opposing internal faces so that the preferred axis of each element is essentially normal to the internal face on which the element is mounted, said lens means being constructed of a material in which the velocity of sound is at least 1.5 times the velocity of sound in water, internal faces of the acoustic lens means are disposed at an angle with respect to said external face such that the energy transformation elements are effectively shielded from reflected acoustic signals arriving within an angle of at least 49° with respect to the vessel's hull.

4,063,215
HIGH FIDELITY LOW FREQUENCY TRANSDUCER FOR USE AT GREAT DEPTH
Frank R. Abbott, San Diego, Calif., assignor to The United States of America as represented by the Secretary of the Navy, Washington, D.C.
Filed Feb. 28, 1977, Ser. No. 772,718
Int. Cl.² H04B *13/00*
U.S. Cl. 340—8 LF **3 Claims**

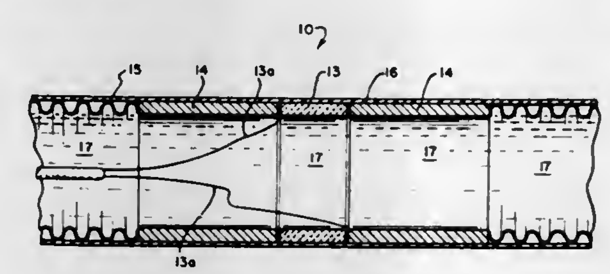

1. An apparatus for ensuring the pressure compensated transfer of acoustic energy in a water medium comprising:
a number of ferroelectric cylinders having a polarization for generating signals representative of impinging acoustic energy when the impinging acoustic energy causes a radial deformation;
pairs of rigid cylinders mounted at opposite sides of each of the ferrroelectric cylinders in an aligned relationship for providing a continuous rigid extention thereof;
elongate corrugated tubes each having a length greatly in excess of the length of the ferroelectric cylinders and being substantially radially imcompressible, the corrugated tubes are coupled in an aligned relationship with the ferroelectric cylinders and rigid cylinders and are coupled at opposite ends of the rigid cylinders, the ferroelectric cylinders, rigid cylinders and corrugated tubes are all mutually aligned to form a streamlined elongate array;
means filling the ferroelectric cylinders, the rigid cylinders and the corrugated tubes for liquidly yielding in response to the impinging acoustic energy thereby permitting the generating means to generate the representative signals, the yielding means having a compressibility in excess of the surrounding water medium;
means coupled to the ferroelectric cylinders for feeding the representative signals to remote monitoring circuitry; and
means for encasing the ferroelectric cylinders, the rigid cylinders, the elongate corrugated tubes and the yielding means and mounted thereabout to further provide a streamlined elongate array.

4,063,216
DISPLAYING SEISMIC SECTIONS IN ISOMETRIC VIEW
Lloyd Russell Chapman, Tunbridge Wells, and Ronan Francis O'Doherty, London, both of England, assignors to Seiscom Delta Inc., Tex.
Filed Jan. 27, 1975, Ser. No. 544,495
Claims priority, application United Kingdom, Aug. 14, 1974, 35745/74
Int. Cl.² G01V *1/34, 1/28*
U.S. Cl. 340—15.5 DS **9 Claims**

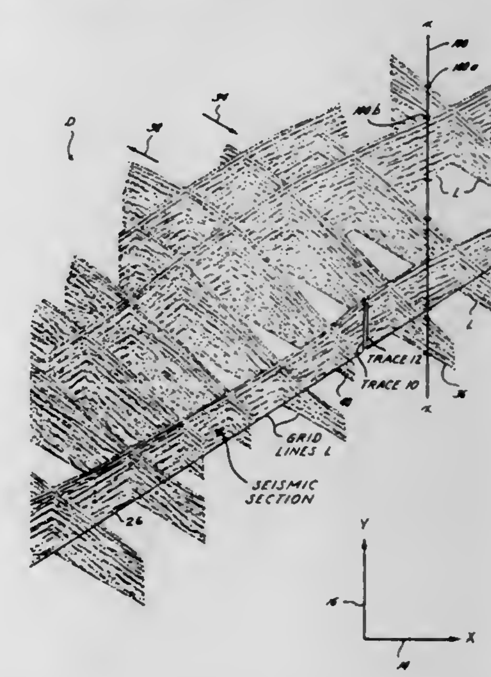

1. A method of forming on a two-dimensional display surface an isometric seismic display to simulate a three-dimension view of seismic traces in plural seismic sections, obtained along a two-dimensional grid of survey lines comprising the steps of:
a. assigning a two-dimensional, positional relationship on the display surface to the survey grid lines in terms of their respective lengths and intersection points on the display surface according to the isometric view to be formed;
b. assembling the seismic traces in an order with respect to each other in accordance with the positional relationship assigned to their grid lines by computing horizontal and vertical co-ordinates for the beginning and ending of the seismic traces; and
c. displaying the assembled seismic traces on the display surface wherein an isometric display is formed of the

seismic traces with increased information content on the two-dimensional display surface.

4,063,217
BACKUP ALARM ACTIVATION MECHANISM FOR POWER SHIFT TRACTORS
Michael B. Hyde, and Raymond A. Bianchi, both of Pekin, Ill., assignors to Caterpillar Tractor Co., Peoria, Ill.
Filed May 3, 1976, Ser. No. 682,423
Int. Cl.^{2} B60Q *1/22*
U.S. Cl. 340—70 8 Claims

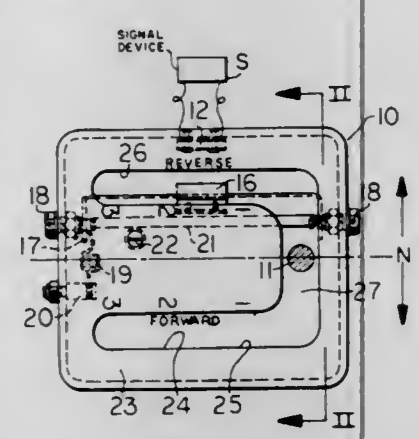

1. Apparatus for signalling an intended reverse operation of a mechanism having a shift lever selectively positionable in forward, neutral, and reverse positions prior to placement of the shift lever in the reverse position for effecting such reverse operation, said apparatus comprising: a signalling device; control means for operating said device to provide a warning signal; and activating means responsive to movement of said shift lever in the neutral position toward the reverse position for activating said control means to operate said signalling device prior to, during, and subsequent to reverse operation of the mechanism to forewarn of the reverse operation and to maintain the warning for a period of time after powered reverse operation is terminated.

4,063,218
AIRCRAFT TAKE-OFF AND LANDING SYSTEM AND METHOD FOR USING SAME
Nikolai Gennadievich Basov, ulitsa Dmitria Ulyanova, 3, kv. 113, Moscow; Igor Alexandrovich Berezhnoi, ulitsa Tukhachevskogo, 253, kv. 18; Vyacheslav Sergeevich Vekshin, ulitsa Partizanskaya, 94, kv. 56, both of Kuibyshev; Vladimir Alexandrovich Danilychev, ulitsa Profsojuznaya, 111, korpus 3, kv. 226, Moscow; Albert Ivanovich Elatontsev, ulitsa Sovetskoi Armii, 163, kv. 16, Kuibyshev; Vladimir Vasilievich Ignatiev, prospekt Kirova, 293, kv. 40, Kuibyshev; Vitaly Dmitrievich Karyshev, ulitsa Sportivnaya, 5-25, kv. 5, Kuibyshev, and Alexandr Konstantinovich Togulev, ulitsa Jubileinaya, 8, kv. 71, Kuibyshev, all of U.S.S.R.
Filed Oct. 15, 1975, Ser. No. 622,762
Claims priority, application U.S.S.R., Oct. 22, 1974, 2069154
Int. Cl.^{2} G08G *5/00*
U.S. Cl. 340—26 31 Claims

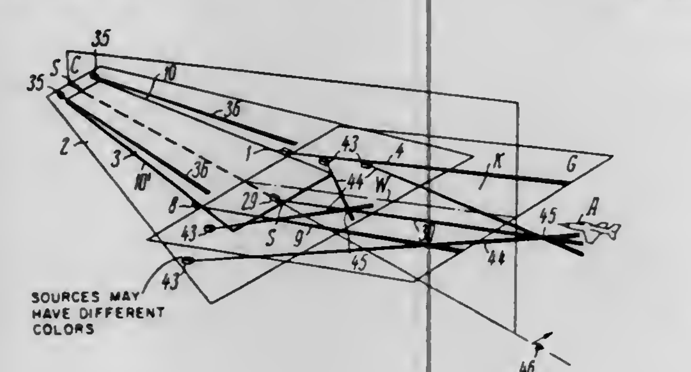

1. A takeoff and landing system for insuring takeoff and landing of aircraft from the moment of their entry into the coverage of the system, of the type which provides the pilot with information relating to the location of a desired landing platform and the glide slope thereto, comprising: at least one electromagnetic radiation means for producing radiation within two preselected wavelength limits, one of which is infra-red and one of which is visible, positioned on a flight platform and directed skywards for producing a beam of said electromagnetic radiation which is a pencil beam with a divergence less than 5° which forms a symbol of a specified configuration in the sky for perception by the pilot which indicates the course and glide slope of the aircraft's takeoff and landing path.

4,063,219
CHARACTER RECOGNITION SYSTEM
James Dishaw, Allen Park, and Thomas R. Krause, Troy, both of Mich., assignors to Burroughs Corporation, Detroit, Mich.
Filed Dec. 27, 1976, Ser. No. 754,275
Int. Cl.^{2} G06K *9/12*
U.S. Cl. 340—146.3 MA 19 Claims

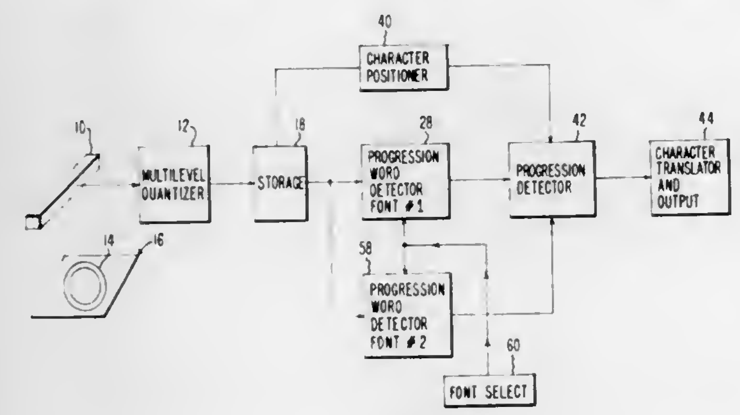

1. A method of identifying a presented character comprising the steps of:
generating binary signals representing the information content of a geometric pattern corresponding to the presented character;
storing the binary signals in a data field array which defines a matrix of progressions, each progression overlapping the preceding progression whereby each progression is associated with every other progression, the data field array being in approximately conformity with the geometric pattern of the presented character;
decoding predetermined combinations of the binary signals, each of the predetermined combinations representing a progression, the combinations further representing overlapping neighborhood dependent areas; and
detecting predetermined combinations of the detected progressions from which detected progressions the presented character is recognized as a known type.

4,063,220
MULTIPOINT DATA COMMUNICATION SYSTEM WITH COLLISION DETECTION
Robert M. Metcalfe, Woodside; David R. Boggs; Charles P. Thacker, both of Palo Alto, and Butler W. Lampson, Portola Valley, all of Calif., assignors to Xerox Corporation, Stamford, Conn.
Filed Mar. 31, 1975, Ser. No. 563,741
Int. Cl.^{2} H04Q *9/00*
U.S. Cl. 340—147 LP 22 Claims

22. A data communication system comprising:
a bit-serial data communication system;
a plurality of transceivers connected for communication with said medium, each transceiver including transmitting means and receiving means communicating with said medium;
communication sensing means operatively connected to said receiving means for detecting the presence of communications on said medium and for preventing transmissions from said transmitting means to said medium upon detecting the presence of other communications on said medium;
collision detecting means connected to said transmitting and receiving means for producing a collision signal when a signal produced by said transmitting means and a signal received by said receiving means are unequal;
interface means connected to said transmitting and receiving means to receive said collision signal and for transmitting an output signal to said transmitting means in the absence of said collision signal and for receiving signals from said receiving means to produce an input signal, said interface means including buffer means for producing said output signal and for receiving said input signal, a first shift register connected for bit-serial receipt of said input signal from said receiving means and for parallel output of said input signal to said buffer means, an address filter connected to selected parallel outputs of said first shift register for enabling the transfer of said input signal upon a

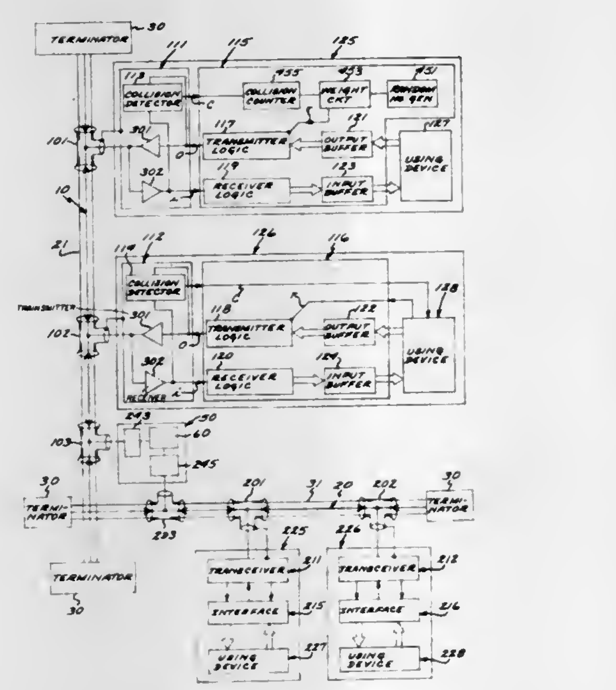

preselected combination thereof, a second shift register connected for parallel receipt of said output signal for converting said output signal to a bit-serial output signal, and a transmitter clock connected to said second shift register for controlling the rate of said bit-serial output signal;
random number generating means operatively connected to said transmitter clock and including a fast clock for producing a random number signal according to the asynchronous relationship between said fast clock and said transmitter clock;
collision counting means connected to receive said collision signal for accumulating the repetition of said collision signal and producing a count signal indicative thereof; and
weighting means connected to receive said random number signal and said count signal for adjusting the mean value of said random number signal according to said count signal to produce an enabling signal to said second shift register; and
using means connected to transmit data to and receive data from said buffer means.

4,063,221
PROGRAMMABLE CALCULATOR
Robert E. Watson; Jack M. Walden, and Charles W. Near, all of Loveland, Colo., assignors to Hewlett-Packard Company, Palo Alto, Calif.
Division of Ser. No. 153,437, June 15, 1971, Pat. No. 3,859,635. This application Dec. 23, 1974, Ser. No. 535,750
Int. Cl.^{2} G06F *7/38*
U.S. Cl. 364—900 7 Claims

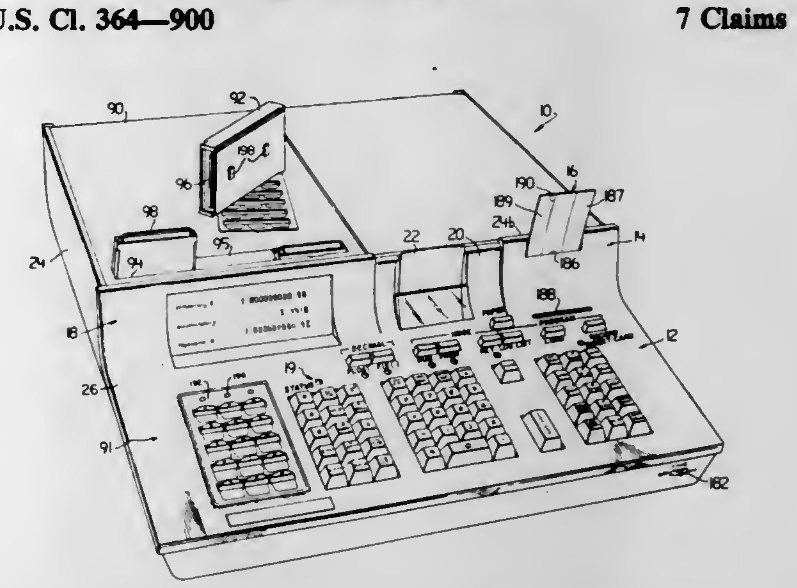

1. An electronic calculator comprising;
a keyboard input unit for entering information into the calculator;
a basic first memory unit into which information may be written and from which information may be read;
a basic second memory unit for storing routines and/or subroutines to be executed by the calculator in performing selected functions;
one or more additional memory units for storing routines and/or subroutines to be executed by the calculator in performing additional selected functions;
plug-in adaptor means for enabling the user to removably plug at least one of said additional second memory units into the calculator to increase the number of functions that may be performed by the calculator;
processing means responsive to information from the keyboard input unit or the basic first memory unit for selectively executing one or more of the routines and/or subroutines stored in the basic second memory unit or in any of the additional second memory units plugged into the calculator to perform one or more of the selected functions employing information from one or both of the keyboard input and basic first memory units; and
an output unit for providing an output indication of the selected functions performed by the calculator;
said keyboard input unit including a first plurality of keys for enabling the user to manually initiate the basic functions that may be performed by the calculator without an additional second memory unit, and a second plurality of keys employed alone or with one or more of the first plurality of keys for enabling the user to manually initiate the added functions that may be performed by the calculator when each additional second memory unit is plugged into the calculator;
some of said second plurality of keys serving as control keys and others as definable keys when one of the additional second memory units is plugged into the calculator;
said one of the additional second memory units including logic responsive to user operation of said keyboard input unit means for enabling the control keys to be employed either alone or with one or more of the first plurality of keys for associating one or more programs then stored in the first memory unit with one or more of the definable keys or for defining one or more functions to be performed by the calculator, said logic means further including means for storing each defined function as a program in the basic first memory unit, and for associating each

defined function with one of the definable keys whereby each program or defined function associated with one of the definable keys may be initiated by that definable key.

4,063,222
SELECTIVE ERASURE OF IMAGE RECORDING DEVICES
Jan S. Snyder, Upland, Calif., and Clark I. Bright, Kula Kai, Hawaii, assignors to Xerox Corporation, Stamford, Conn.
Filed Jan. 21, 1976, Ser. No. 650,825
Int. Cl.² G03G *16/00;* G11C *11/42*
U.S. Cl. 365—126 **26 Claims**

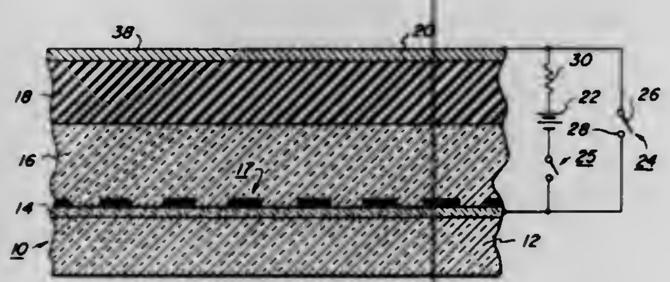

1. A method for selectively erasing information formed on a surface of an image recording device, said information being in the form of deformations on said surface, comprising the steps of:

a. providing an image recording device comprising a first conductive layer, a layer of photoconductive material adjacent said first conductive layer, an electric field deformable elastomer layer adjacent said layer of photoconductive material and a deformable conductive layer adjacent said elastomer layer,
b. subjecting said image recording device to an electric field,
c. generating radiation to which the photoconductive layer is responsive,
d. modulating said radiation in accordance with information to be formed on said elastomer layer as deformations,
e. directing said information modulated radiation to said image recording device to thereby deform said elastomer layer corresponding to changes in the electric field caused by said information modulated radiation,
f. removing the electric field applied to said recording device,
g. creating a short-circuit condition between said first conductive layer and said deformable conductive layer, and
h. directing said radiation to selected areas of said image recording device whereby the deformations created on said elastomer layer which correspond to said selected areas are erased.

4,063,223
NONDESTRUCTIVE CURSORS IN AC PLASMA DISPLAYS
Eugene Stewart Schlig, Somers, and George Raymond Stilwell, Jr., West Nyack, both of N.Y., assignors to International Business Machines Corporation, Armonk, N.Y.
Filed Aug. 11, 1976, Ser. No. 713,567
Int. Cl.² G11C *11/28*
U.S. Cl. 365—116 **22 Claims**

1. A method of causing light emission from selected cells of an AC gas discharge display panel without loss of the previous memory state of said selected cells by applying a voltage waveform thereto comprising successive voltage complexes each having, at least a first component of at least one voltage level having a magnitude approximately equal to that of the magnitude of the sustain voltage level V_s for said display panel, at least a second component of at least one voltage level having a polarity the same as the polarity of said at least one voltage level of said first component and a magnitude approximately equal to twice that of the sustain voltage level V_s, and at least

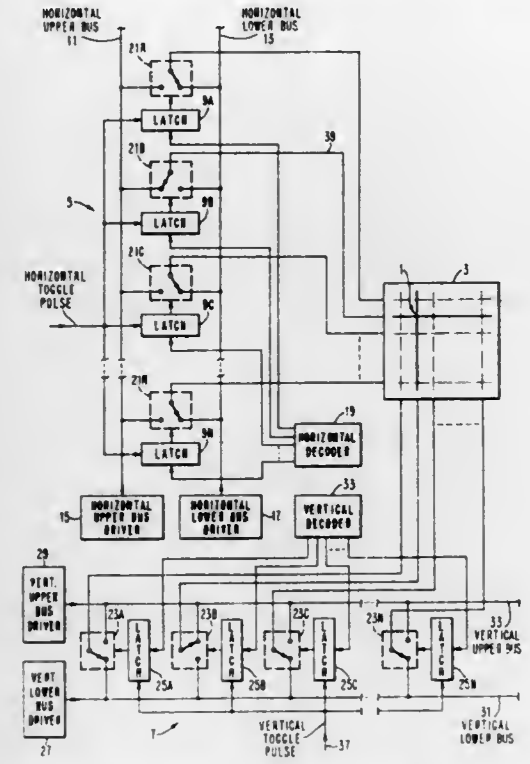

a third component of at least one voltage level approximately equal to zero volts.

4,063,224
CIRCUIT FOR THE PRODUCTION OF READ-OUT PULSES
Nikolaus Kirschner, Johannesburg-Berea, South Africa, assignor to Siemens Aktiengesellschaft, Berlin & Munich, Germany
Filed Mar. 25, 1976, Ser. No. 670,409
Claims priority, application Germany, Apr. 3, 1975, 2514582
Int. Cl.² G11C *11/40*
U.S. Cl. 365—189 **7 Claims**

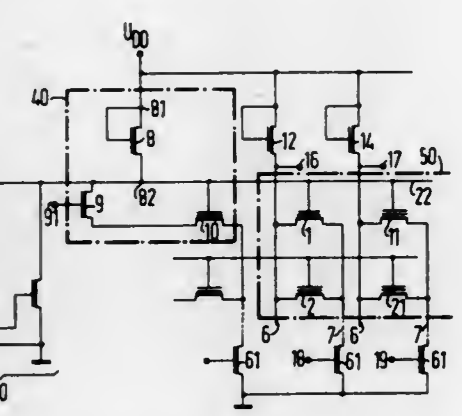

1. For use with a storage matrix of MI_1I_2S storage transistors each having a gate and connected in rows with the gates connected to gate lines, a circuit for producing read-out pulses comprising:

a further MI_1I_2S transistor including a source-drain path, and a gate connected to a gate line as the gates of the MI_1I_2S transistors of the matrix; and
control means connected to said source-drain path and to said gate for operating said further MI_1I_2S transistor in the same manner as said MI_1I_2S storage transistors, said control means connecting said source-drain path in a voltage divider circuit which is operable to produce read-out voltage pulses on the gate line.

4,063,225
MEMORY CELL AND ARRAY
Roger Green Stewart, Neshanic Station, N.J., assignor to RCA Corporation, New York, N.Y.
Filed Mar. 8, 1976, Ser. No. 664,673
Int. Cl.² G11C *11/40;* H03K *3/26, 3/29*
U.S. Cl. 365—156 **12 Claims**

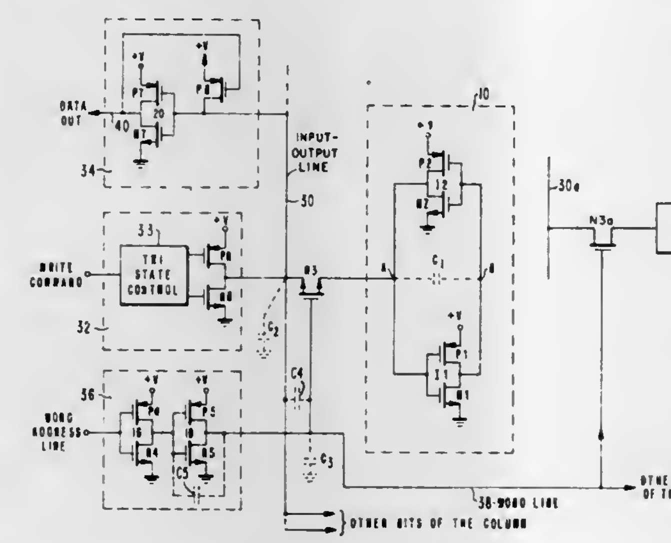

1. The combination comprising:
first and second inverters, each inverter having an input and an output, the inverters being characterized in that they both have a high input impedance and the output impedance of the second inverter being significantly less than the output impedance of the first inverter for the same turn on bias condition;
a common input-output point;
means cross-coupling the two inverters for forming a flip-flop including means connecting the output of the first inverter to the input of the second inverter, and negligible impedance means connecting the input of the first inverter and the output of the second inverter to said input-output point; and
input means connected to said input-output point for selectively setting said flip-flop and for selectively sensing the state of said flip-flop.

4,063,226
OPTICAL INFORMATION STORAGE SYSTEM
Adam Kozma, Ann Arbor, Mich.; Anthony Vander Lugt, Indialantic, and Andrew M. Bardos, Indian Harbour Beach, both of Fla., assignors to Harris Corporation, Cleveland, Ohio
Continuation of Ser. No. 452,071, March 18, 1974, abandoned. This application Dec. 31, 1975, Ser. No. 645,525
Int. Cl.² G11C *13/04*
U.S. Cl. 365—125 **11 Claims**

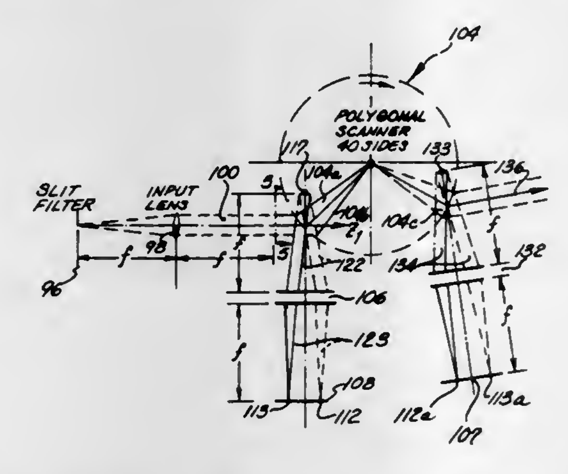

5. A method for use in an information storage system having a member bearing spatially distributed record of information comprising the steps of establishing a light beam from a light source, said beam having a plurality of longitudinally spaced beam segments, deflecting a first segment of the beam by means of a first light deflector to propagate along a second segment of the beam to the information-bearing member, moving said first light deflector about an axis which is substantially perpendicular to the plane defined by said first and second segments to scan said second beam segment across said information-bearing member, producing a modulated third beam segment by modulating said second segment with said information record, deflecting the third beam segment by a second light deflector to propagate along a fourth beam segment, and moving said second light deflector about said axis in synchronism with said first light deflector in a motion adapted to substantially eliminate any rotational component of motion from said fourth beam segment.

4,063,227
SMOKE DETECTOR
Christian C. Peterson, Westwood, Mass., assignor to Cega, Inc., Wilmington, Del.
Filed Sept. 8, 1975, Ser. No. 610,982
Int. Cl.² G08B *17/10*
U.S. Cl. 340—237 S **18 Claims**

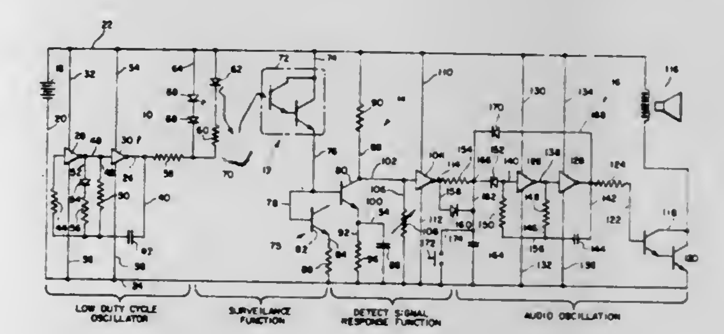

1. Surveillance apparatus for detecting the presence of aerosols within an environment comprising:
light emitting means energizable to provide a region of radiation:
oscillator means for energizing said light emitting means during surveillance intervals of short duration, said surveillance interval energization being effected at a sampling frequency having a period substantially greater than a said surveillance interval;
detector means, characterized by the presence of temperature dependent dark current phenomena and exhibiting a first signal condition in response thereto, said detector means further being characterized in having a high rate of response to the presence of aerosol within said region of radiation and exhibiting a second signal condition in correspondence therewith;
stabilization network means responsive to discriminate said first signal condition, as steady state in nature, from said second signal condition, and including amplifier means coupled with said detector means and comprising a transistor stage and bias clamping means for retaining said transistor stage in a partially forwardly biased condition in the presence of said first signal condition, said amplifier means being responsive to said second signal condition to generate a detect signal output as a step function; and
means responsive to said detect signal output for generating an alarm signal.

4,063,228
MOISTURE DETECTOR FOR STEAM LINE
Markus A. Eggenberger, Schenectady, and Edward H. Miller, Rexford, both of N.Y., assignors to General Electric Company, Schenectady, N.Y.
Filed Dec. 22, 1976, Ser. No. 753,213
Int. Cl.² G08B *21/00;* G01N *25/60*
U.S. Cl. 340—239 R **11 Claims**

1. A monitoring device for detecting the presence of an increased moisture content in a steam conduit comprising:

a first heated thermal sensing device disposed in the steam conduit;
a second ambient thermal sensing device disposed in the steam conduit;
a pressure-sensitive directional probe disposed in the steam conduit; and,

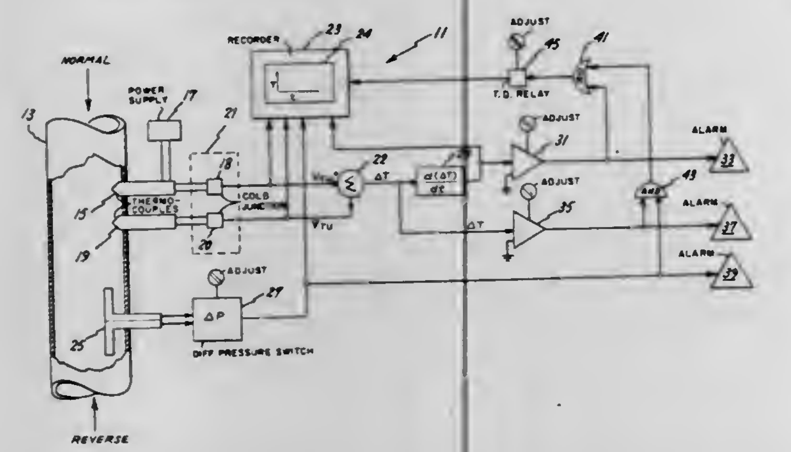

logic means receiving the respective outputs of said first and second thermal sensing devices for determining the presence of increased moisture content in said steam conduit, said logic means also receiving the output of said directional probe for determining the flow direction in said steam conduit.

4,063,229
ARTICLE SURVEILLANCE
John Welsh, North Canton, Ohio; Richard N. Vaughan, Sydney, Australia, assignors to Sensormatic Electronics Corporation, Hollywood, Fla.
Continuation of Ser. No. 639,250, March 30, 1967, abandoned. This application June 28, 1971, Ser. No. 1,970
Int. Cl.² G08B *21/00*
U.S. Cl. 340—280 **28 Claims**

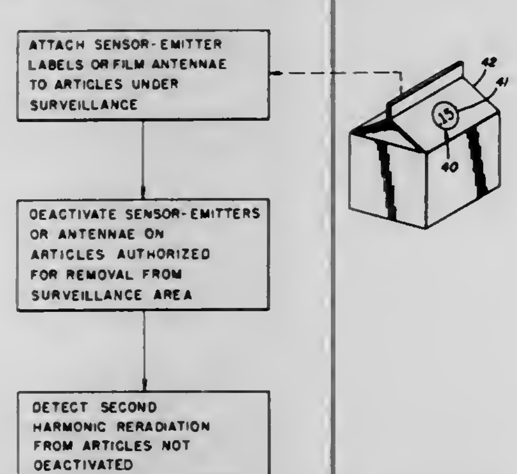

1. An article surveillance system comprising transmitting means to establish an electromagnetic wave field within a surveillance zone, passive sensor-emitter means for application to an article susceptible of relative movement into said surveillance zone, said sensor-emitter means comprising a two-terminal nonlinear impedance element conductively connected directly to antenna means supported by a structure adapted to be secured to said article under surveillance, said nonlinear impedance element cooperating with said antenna means when in said zone to reradiate at least a portion of the energy in said wave field in the form of a signal which is different and distinguishable from any signal otherwise present in said wave field, and receiving means to detect said reradiated signal to the exclusion of any signals produced directly by said transmitting means.

4,063,230
BALANCED FIELD THEFT DETECTION SYSTEM
Edwin C. Purinton, Oreland; Carl S. Holzinger, Coopersburg, and Robert Auger, Lansdale, all of Pa., assignors to The Magnavox Company, Fort Wayne, Ind.
Filed June 12, 1975, Ser. No. 586,333
Int. Cl.² G08B *13/24*
U.S. Cl. 340—280 **11 Claims**

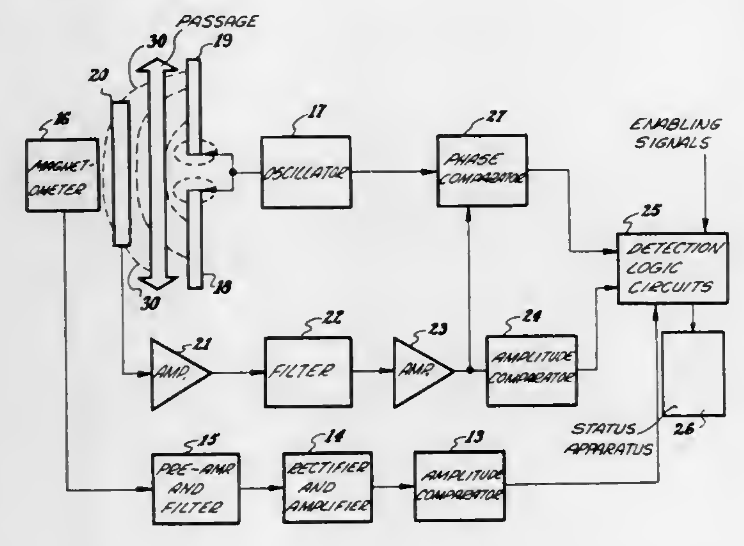

1. Apparatus for identifying a presence at a predetermined location of an object having preselected properties, comprising:
means for applying simultaneously at least two periodic electro-magnetic fields at said predetermined location, said periodic electro-magnetic fields forming a resultant curved electro-magnetic field, said preselected properties of the object producing a perturbation of said resultant curved electro-magnetic field when said object is within the predetermined location;
means for detecting said resultant curved electro-magnetic field, said detection means being arranged with respect to said resultant curved electro-magnetic field to provide a substantially null output signal when said resultant curved electro-magnetic field is unperturbed;
means for measuring an amplitude of an output signal of said detection means produced by a perturbation of said resultant curved electro-magnetic field;
means for measuring a phase of an output signal of said detection means relative to said resultant curved electro-magnetic field; and
means for signaling said presence of said object when said amplitude measurement means and said phase measurement menas measure values within pre-established limits.

4,063,231
VISUAL DISPLAY APPARATUS
William Norman Mayer, White Bear Lake; Richard Karl Kirchner, Bloomington, and Nicholas Cleanthis Andreadakis, White Bear Lake, all of Minn., assignors to Modern Controls, Inc., Minneapolis, Minn.
Filed Oct. 26, 1976, Ser. No. 735,153
Int. Cl.² G06F *3/14;* **H05B** *41/02*
U.S. Cl. 340—324 M **11 Claims**

1. A visual display screen apparatus of the type having a matrix of selectable light cells wherein each cell contains an ignitable gas in close dielectric coupling with a voltage source, comprising:
a. a plurality of groups of cells, each group subdivided into rows and perpendicular lines, the intersection of each of which comprises an ignitable gas cell and wherein adjacent cells along a line have respective different weights of color-emitting phosphor deposited therein, and wherein adjacent cells along a row have respective different color-emitting phosphors deposited therein; and

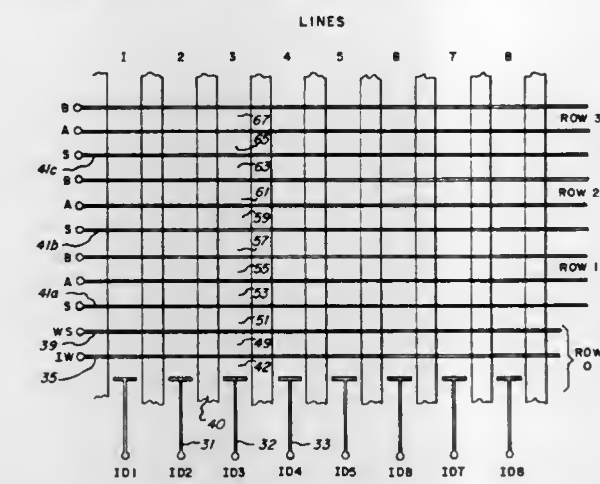

b. means for selectively energizing any combination of said cells in each of the plurality of groups of cells.

4,063,232
SYSTEM FOR IMPROVING THE RESOLUTION OF ALPHA-NUMERIC CHARACTERS DISPLAYED ON A CATHODE RAY TUBE
Olaf H. Fernald, 44 Hundreds Circle, Wellesley Hills, Mass. 02181
Continuation of Ser. No. 216,977, Jan. 11, 1972, abandoned, which is a continuation-in-part of Ser. No. 46,066, June 15, 1970, abandoned. This application June 8, 1973, Ser. No. 368,116
Int. Cl.² G06F *3/14*
U.S. Cl. 340—324 AD **3 Claims**

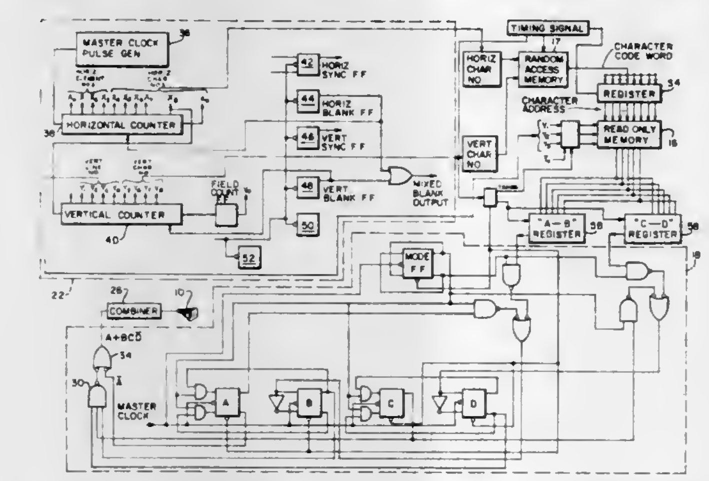

1. A system for displaying high resolution alpha-numeric characters each in a grid pattern of selectively illuminated spots of large and small elements, comprising
a. a cathode ray tube,
b. memory means including a fixed storage portion and a variable portion connected to said tube for storing encoded alpha-numeric characters in a grid pattern,
c. input means connected to the variable portion of said memory means for feeding input information into said system,
d. driving means connected to said memory means and said tube for generating a slightly displaced double raster grid matrix on said tube,
e. timing means connected to said memory means and said driving means for cyclically repeating the output of said memory means in synchronism with said driving means,
f. the fixed storage portion of said memory means storing encoded versions of said alpha-numeric characters in essentially a single grid element width format, and
g. pattern control means connected to said memory and driving means to receive inputs therefrom for modifying the generated character of one raster with respect to the same character of the other raster;
h. said pattern control means including logic circuitry connected between said memory means and said tube, said circuitry including gates receiving input signals from said memory with respect to large elements of each character being generated and adapted to produce a small element output signal to modify said character upon the occurrence of a predetermined combination of signals,
i. said gates including an OR gate, and AND gate and an inverter receiving signals in one of two possible states with respect to an unknown portion of said character and providing an output of said tube,
j. said gates and inverter connected in parallel with one of said gates being an output gate, said output gate connected to receive two input signals one of which corresponds to a grid area within which an unknown area fails, and the other of which is the output of said gates and inverter, said other gates and inverter connected to receive at least three other signals corresponding to other parts of said grid pattern,
k. said circuitry expressing the algorithm A+ (B·C·D) and the logical equivalents thereof where A represents a signal corresponding to a grid area within an unknown area falls, B represents a signal corresponding to a horizontally adjacent area, C represents a signal corresponding to a vertically adjacent area, D represents a signal corresponding to a diagonally adjacent area and D represents the inversion of the signal D.

4,063,233
THREE-DIMENSIONAL DISPLAY DEVICES
William Guy Rowe, P.O. Box 425, Boonville, Calif. 95415
Filed Dec. 4, 1975, Ser. No. 637,677
Int. Cl.² G06F *3/14*
U.S. Cl. 340—324 A **5 Claims**

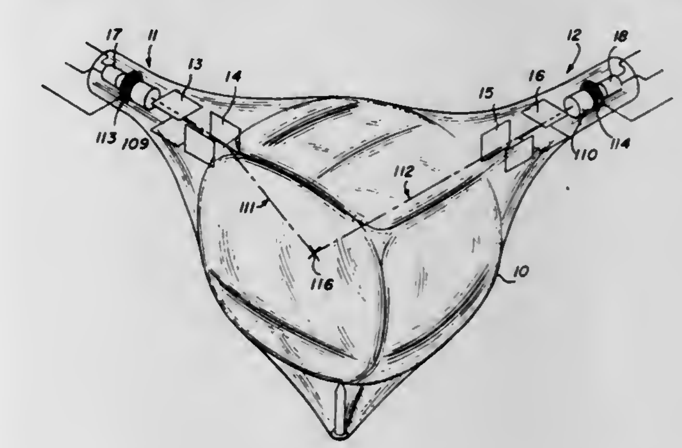

1. An apparatus for visually and photographically evaluating the characteristics of experimental electron beams which comprises:
a sealed substantially evacuated envelope having a display space and having a transparent portion for viewing the display space;
a plurality of particles having surfaces of luminescent material, contained within the envelope, which particles luminesce when bombarded by electron beams;
a collection chamber adjoining the envelope and communicating with the interior of the envelope, and so oriented that the free fall of particles under gravitational attraction results in the accumulation of particles within the chamber;
an electrode located within the collection chamber and adapted to produce, when electrified, a high-gradient electric field in the vicinity of the collection chamber for agitating the particles to cause said particles to repetitively traverse the display space;
means for introducing experimental electron beams into the display space of the envelope.

4,063,234
INCANDESCENT, FLAT SCREEN, VIDEO DISPLAY
Robert M. Arn, 41 Main Street, and Glen F. Waszek, 20 Algonquin Avenue, both of Toronto, Ontario, Canada
Filed Aug. 8, 1975, Ser. No. 603,043
Int. Cl.² G09F *9/32*
U.S. Cl. 340—334 **10 Claims**

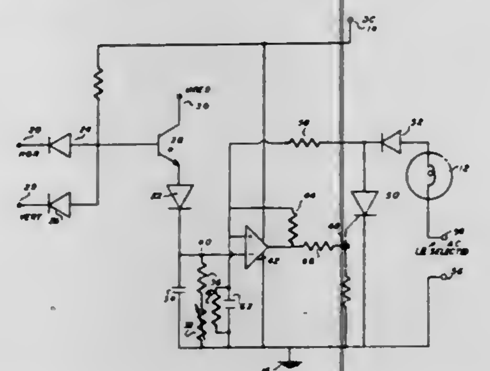

1. A flat screen video display apparatus of the sort comprising a plurality of incandescent lamps, each of which is individually addressable in an X-Y matrix, where video information for each lamp is derived from a television signal and displayed by illuminating the lamp for a controlled period of time so as to give visual gray scale effects according to the length of time of illumination of the lamp; each lamp being connected in series with a source of power, a memory having a time constant and a driver circuit, comprising, for each lamp:

a means for detecting, storing and decaying a video signal intended for display at that lamp at the next time that the lamp may be illuminated; the stored video signal having a decay rate established by the time constant of the memory and being allowed to decay over a decay period equivalent to the vertical video field sweep period;

comparator means having inputs from said means for detecting, storing and decaying said video signal and from reference signal means; said comparator means being adapted to initiate an output signal when the values of the decayed video signal and the reference signal are coincident; the timing of the coincidence of said reference and decayed video signals being a function of the initial value of the video signal and of the memory decay time constant; and

solid state switching means connected to the output of said comparator means and in series with said lamp and said source of power, so as to control the period of illumination of said lamp.

4,063,235
NON-RETURN TO ZERO MARK TO NON-RETURN TO ZERO LEVEL CODE CONVERTER
Volker Ludwig, Gelting, Germany, assignor to Siemens Aktiengesellschaft, Berlin & Munich, Germany
Filed Oct. 29, 1976, Ser. No. 736,812
Claims priority, application Germany, Oct. 31, 1975, 2548913
Int. Cl.² H03K *13/24*
U.S. Cl. 340—347 DD **3 Claims**

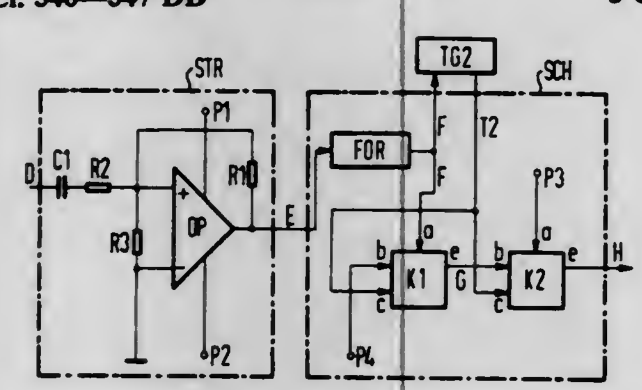

1. A circuit arrangement for reshaping a pulse edge data signal, whose pulse edges signal binary values of data, into an amplitude data signal, whose amplitudes signal the binary values of the data, comprising:

a pulse generator for producing timing pulses having a period equal to the duration of the individual binary values;

a pulse shaper including an input and an output, said pulse shaper receiving the pulse edge data signal at said input and responsive to emit a rectangular signal at said output having short duration pulses corresponding to the pulse edges of the pulses of the pulse edge data signal; and

first and second bistable trigger circuits each including a setting input, a data input, a pulse train input and an output which emits binary values which signal the stable states,

said pulse train inputs of said trigger circuits connected to said pulse generator, and said data input of said first trigger circuit and said setting input of said second trigger circuit connected to a reference valve,

said setting input of said first trigger circuit connected to said pulse shaper to receive and rectangular signal,

said first trigger circuit responsive to a rectangular pulse of said rectangular signal to assume one state and responsive to a timing pulse, in the absence of a rectangular pulse, to assume the other state,

said output of said first trigger circuit connected to said data input of said second trigger circuit, and

said second trigger circuit assumming the stable state of said first trigger circuit in response to its data input and an edge of a timing pulse to emit the amplitude data signal at its output.

4,063,236
ANALOG-DIGITAL CONVERTER
Hiroshi Amemiya, Fujisawa; Tadaaki Tarui, Kawasaki, and Tsuneo Yoneyama, Yokosuka, all of Japan, assignors to Tokyo Shibaura Electric Co., Ltd., Tokyo, Japan
Filed Oct. 24, 1975, Ser. No. 625,672
Claims priority, application Japan, Oct. 24, 1974, 49-121925; Oct. 24, 1974, 49-121927; Oct. 24, 1974, 49-121928
Int. Cl.² H03K *13/20*
U.S. Cl. 340—347 NT **7 Claims**

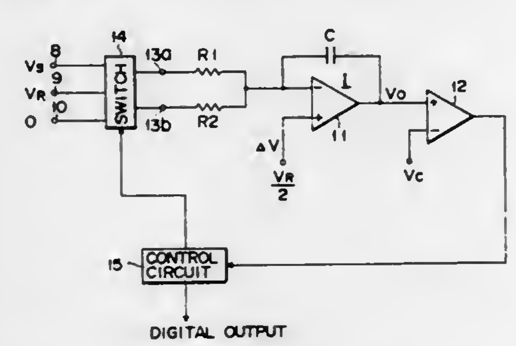

5. An analog-digital converter comprising first and second signal input terminals to which is selectively applied through an analog switch means any one of an input analog voltage, a first reference voltage and a second reference voltage; an integration circuit having first and second integration resistors selectively connected to said first and second signal input terminals, a D.C. amplifier having an inversion input terminal to which said first and second integration resistors are connected and a non-inversion input terminal to which is applied a specified voltage having an intermediate value between said first and second reference voltages, and an integration capacitor connected between an output terminal of said D.C. amplifier and said inversion input terminal; an analog comparator having a first input terminal connected to said output terminal of said D.C. amplifier and a second input terminal to which is applied a comparing reference voltage; and a control circuit for selectively applying through said analog switch means any one of said analog voltage, said first reference voltage and said second reference voltage to said first and second signal input terminals, characterized in that said control circuit comprises a first changing-over means for changing over said analog switch means so as to apply said input voltage and either one of said first and second reference voltages to said first and second integration resistors, a second changing-over means for changing over said analog switch means so as to apply one of said first and second reference voltages to said first and second integration resistors commonly, a third changing-over means for changing over said analog switch means so as to apply said input voltage and either one of said first and second reference voltages which is same as said first changing-over means to said first and second integration resistors respectively in a manner combined differently from said first changing-over means, and means for obtaining a digital value corresponding to a sum of output voltages of said integrator obtained by said first, second and third changing-over means, whereby an A-D converted amount of said input voltage is obtained using said digital value obtained by said last means.

4,063,237
DISTANCE MEASURING SYSTEM, PARTICULARLY FOR SPACING OF MOVING VEHICLES
Johannes Nier, Gerlingen; Heins Bollhagen, Stuttgart, and Berthold Wocher, Leonberg, all of Germany, assignors to Robert Bosch GmbH, Stuttgart, Germany
Filed Jan. 13, 1975, Ser. No. 540,330
Claims priority, application Germany, Feb. 21, 1974, 2408333
Int. Cl.² B60K *26/04;* **B60T** *7/12;* **G01S** *9/39;* **G08G** *1/16*
U.S. Cl. 343—7 VM **11 Claims**

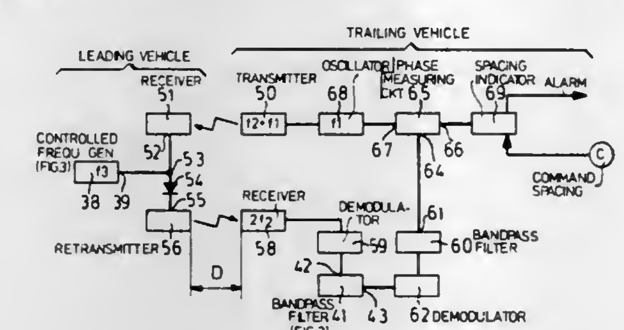

1. Non-contacting distance measurement apparatus to determine the distance between leading and trailing vehicles moving in a predetermined traffic lane of a multiple traffic lane highway between two sequentially positioned vehicles having means (50) secured to the trailing vehicle to propagate radiation towards the leading vehicle;

means (58) to receive returned radiation;

means (65) to determine the transit time of the radiation between the vehicles to determine their distance based on known propagation speed of the radiation,

comprising

a frequency generator (38) to modulate the signal reflected from the leading vehicle to the trailing vehicle;

traffic lane signalling means (14, 15, 16) respectively associated with a respective traffic lane (I, II, III) and providing respective, different lane identification outputs;

and means (21, 22; 24–27) responsive to said lane identification output defined by the respective traffic lanes, and coupled to the frequency generator (38) to determine a respective modulation frequency.

4,063,238
RANGE TRACKING APPARATUS IN A DOPPLER RADAR
Leo Buffington Conner, Jr., Phoenix, Ariz., assignor to Motorola, Inc., Schaumburg, Ill.
Filed May 14, 1976, Ser. No. 686,429
Int. Cl.² G01S *9/06*
U.S. Cl. 343—7.3 **15 Claims**

1. In a doppler radar having a transmitter for periodically transmitting pulses of electrical energy and a receiver for receiving reflected portions of energy of the transmitted pulses, range tracking apparatus comprising:

a. sample and hold means having a signal input, an output, and a gating input for causing said sample and hold means to sample a signal applied to the signal input when a gating signal is applied thereto;

b. threshold means having an input and an output and providing a signal at the output thereof only when a signal exceeding a predetermined threshold is applied to the input thereof, the output of said sample and hold means being coupled to the input of said threshold means;

c. range counter means, coupled to the radar for receiving a signal at the repetition rate of the transmitted pulses, for

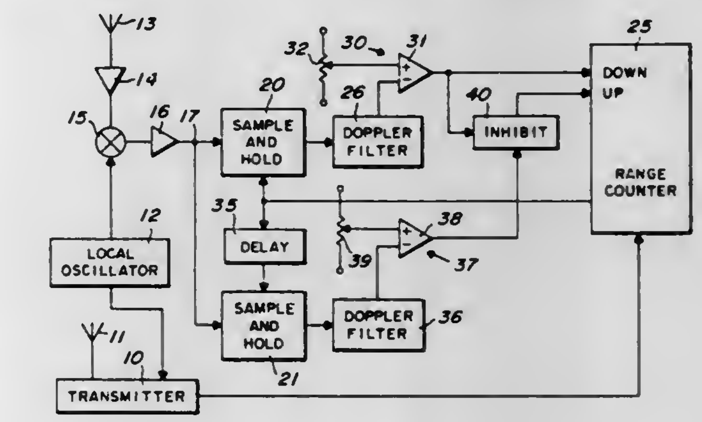

providing a gating pulse having a predetermined width a variable time after each pulse transmitted by the transmitter, said range counter means having an input coupled to the output of said threshold means for varying the time, that the gating pulse occurs after an associated transmitted pulse, by a predetermined fixed increment in response to each signal at the output of said threshold means; and

d. means coupling the gating pulse from the range counter means to the gating input of said sample and hold means.

4,063,239
RANGE OR DOPPLER GATE DECEPTION REJECTION SYSTEM
Robert H. Johnson, 11833 N. 64th St., Scottsdale, Ariz. 85257
Filed Sept. 7, 1976, Ser. No. 720,925
Int. Cl.² G01S *9/44, 7/36*
U.S. Cl. 343—8 **6 Claims**

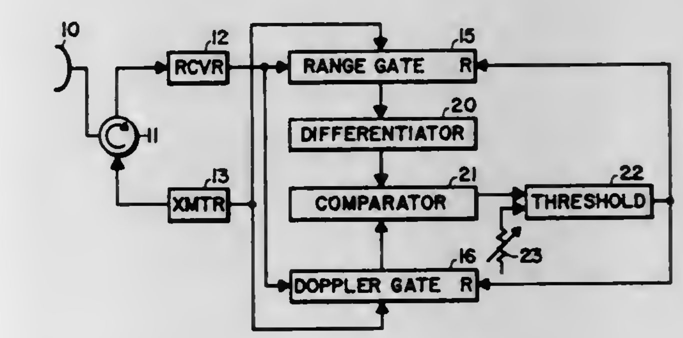

1. A range or doppler deception rejection system comprising:

a. a doppler radar transmitter and receiver;

b. range means connected to said receiver for receiving indications of signals returned from a target and for providing output signals indicative of the range from the system to the target;

c. differentiating means connected to receive the output signal from said range means and to differentiate the output signal to provide a range rate signal indicative of the rate of change of the output signal from said range means;

d. comparator means having first and second inputs and an output, the first input being connected to receive the range rate signal from said differentiating means;

e. doppler means connected to said receiver for determining the relative velocity between the target and the system from the doppler frequency shift of signals returned from the target;

f. the second input of said comparator means being connected to receive a signal indicative of the relative velocity from said doppler means; and
g. means coupling the output of said comparator means to said range means and said doppler means for resetting said range and doppler means when the output of said comparator means exceeds a predetermined amount.

4,063,240
ELECTRONIC DOCKING SYSTEM
Eric J. Isbister, Greenlawn, N.Y.; Robert J. Klepach; Robert F. Riggs, and Terry A. Tucker, all of Charlottesville, Va., assignors to Sperry Rand Corporation, New York, N.Y.
Filed Aug. 25, 1976, Ser. No. 717,795
Int. Cl.[2] G01S *9/44*
U.S. Cl. 343—9 **9 Claims**

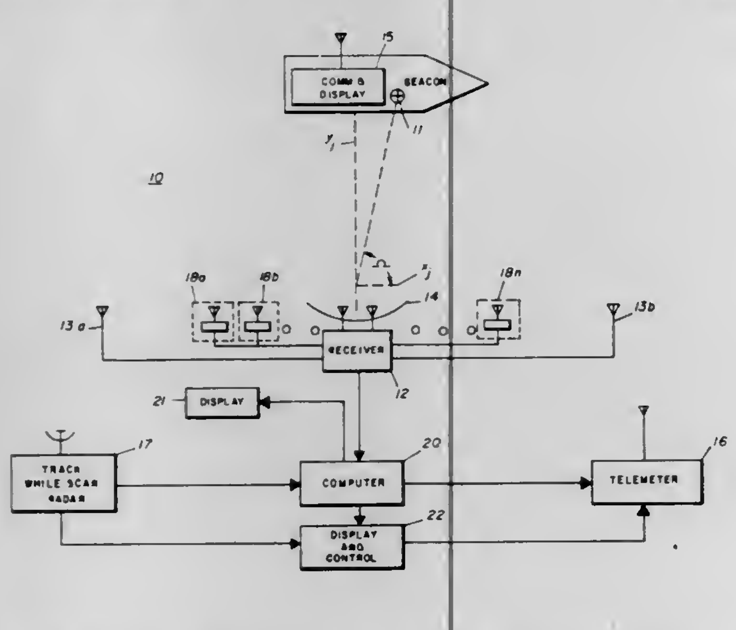

1. A system for deriving docking parameters during the operation of docking a ship to a jetty comprising:
means for determining the angular position of a reference location in the coordinate frame of said jetty;
means for determining the velocity of said reference location, means located at a multiplicity of predetermined locations along said jetty for measuring perpendicular range to a multiplicity of locations along the hull of said ship;
means coupled to each of said range measurement means for providing a best estimate of range and range rate for each of said range measurements;
means coupled to said best estimate means for determining a linear regression line for said hull of said ship in the coordinate frame of said jetty that provides a least squares fit for said best estimate for each of said perpendicular ranges;
means coupled to said best estimate means for determining a linear function for said range rates in the coordinate frame of said jetty that provides a least squares fit for each best estimate of said range rate for each of said hull locations;
means coupled to said linear regression determination means and said linear range rate determination means for determining the turning rate of said ship;
means coupled to said linear regression determination means for determining the slope and intercept of said linear regression in said coordinates frame of said jetty;
means coupled to said linear range rate function determination means for determining the slope and intercept of said linear function for said range rates in said coordinates frame of said jetty;
means coupled to said linear regression line slope and intercept determination means and to said reference location angular position determination means for determining the coordinates of said reference source in said coordinate frame of said jetty;
means coupled to said reference source coordinate determination means for determining the range between said reference source and said reference source range rate determination means;
means coupled to said range rate slope and intercept determination means and to said reference source coordinate determination means for determining the velocity of said ship normal to said jetty; and
means coupled to said reference location range rate determination means, to said normal range rate determination means, and to said means for determining the range between said reference source and said reference source range rate determination means for determining said ship's velocity parallel to said jetty.

4,063,241
RADAR REFLECTOR
Rene-Jean Jouanno, 27, rue Moliere, Limours, France
Filed Sept. 9, 1976, Ser. No. 721,868
Claims priority, application France, Sept. 22, 1975, 75.28907; Mar. 31, 1976, 76.09275
Int. Cl.[2] H01Q *15/20*
U.S. Cl. 343—18 B **10 Claims**

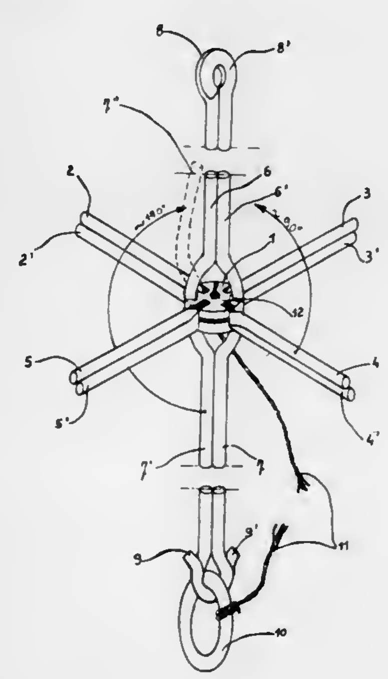

1. A folding radar reflector of the kind which is made up of eight mutually adjoining right-angled tetrahedrons having a common apex, with the bases of the said tetrahedrons not being physically present but forming a regular octahedron whose centre is the said common apex, wherein the reflector has a covering which before being fitted is formed by three squares of a flexible reflective material, each of which is cut along one line joining the centre of the squares to the periphery thereof joining the centre, and each square being joined to another square at the said line of another square in such a way as to form a helix, the said covering being held under tension by a rigid frame after the said reflector has been unfolded.

4,063,242
DOPPLER NAVIGATION SYSTEM WITH REFERENCE SIGNAL SOURCE DIVERSITY
Francis G. Overbury, Cuffley, and Paul Barton, Bishop Stortford, both of England, assignors to International Standard Electric Corporation, New York, N.Y.
Continuation of Ser. No. 574,853, May 6, 1975, abandoned. This application Dec. 20, 1976, Ser. No. 752,537
Claims priority, application United Kingdom, May 30, 1974, 23920/74
Int. Cl.[2] H04B *7/00*
U.S. Cl. 343—100 SA **2 Claims**

1. A Doppler radio navigation beacon system with reference antenna spatial diversity comprising:
reference and main colinear arrays, each including first and second pluralities of uniformly spaced, separately excitable antenna elements, respectively, said second plurality of elements being an integral multiple K of the number of said first plurality;
first and second RF sources for generating reference and main array RF signals, respectively, with a predetermined frequency offset therebetween;
third means for cyclically commutating the signal of said second RF source among the elements of said main array in a pattern randomized as to excited element position within said main array, thereby generating a first irregular sequence;

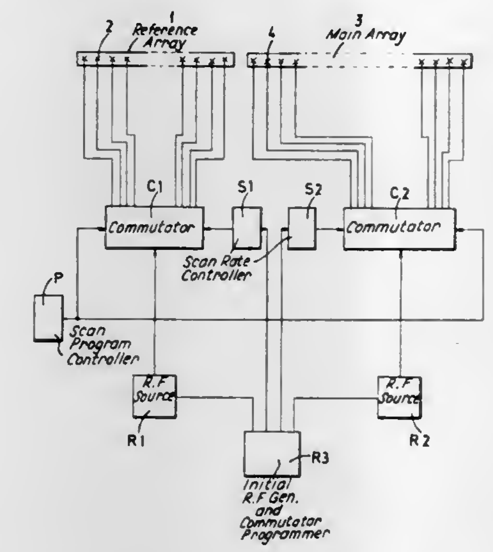

and fourth means for cyclically commutating the signal of said first RF source among the elements of said reference array in a pattern randomized as to excited element position within said reference array, thereby to generate a second irregular sequence, the excitation time of each element of said reference array being substantially equal to the excitation time of a corresponding main array element excited contemporaneously, said third and fourth means further being programmed such that the spacing measured along the line of said colinear arrays between main and reference elements excited contemporaneously changes according to a linear progression as the main array element excited in said first irregular sequence is changed.

4,063,243
CONFORMAL RADAR ANTENNA
Wallace E. Anderson, Beltsville; Albert D. Krall, Rockville; Albert M. Syeles, and Oscar J. Vansant, both of Silver Spring, all of Md., assignors to The United States of America as represented by the Secretary of the Navy, Washington, D.C.
Filed May 27, 1975, Ser. No. 581,470
Int. Cl.[2] H01Q *3/26*
U.S. Cl. 343—100 SA **18 Claims**

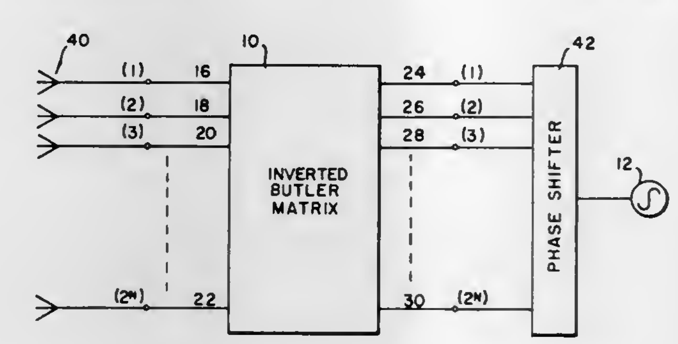

1. A system for conformally scanning an array of antennas in space comprising:
a coherent signal source;
means for providing a series of first output signals from said coherent signal source on a series of outputs having a progressive linear phase shift between adjacent outputs;
matrix means for condensing said series of first output signals to one of a series of second outputs; and,
directive antenna elements connected to said series of second outputs.

4,063,244
RECEIVER/TIMING APPARATUS FOR A SINGLE FREQUENCY, TIME-SHARED POSITIONING SYSTEM
Franz Van de Kop, Baton Rouge, La., assignor to Odom Offshore Surveys, Inc., Baton Rouge, La.
Continuation-in-part of Ser. No. 617,023, Sept. 26, 1975, abandoned. This application Aug. 9, 1976, Ser. No. 713,047
Int. Cl.[2] G01S *1/30*
U.S. Cl. 343—105 R **9 Claims**

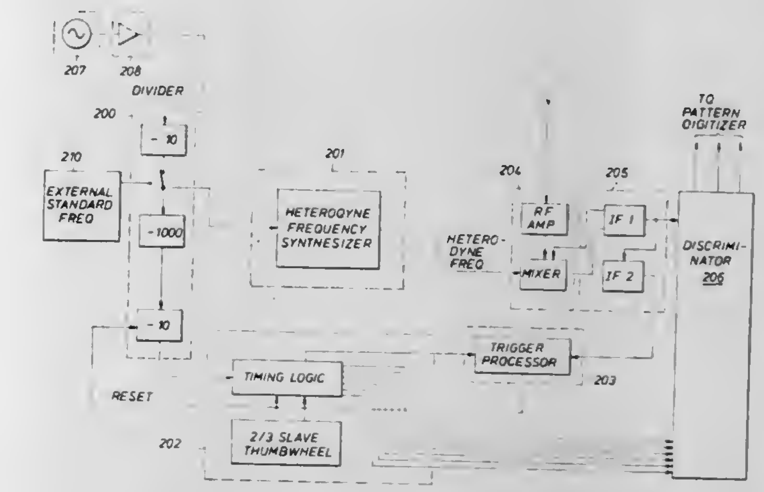

1. In a single frequency, time-shared, phase-comparison positioning system wherein a continuous wave trigger signal is transmitted from a master station, wherein continuous wave pattern frequency signals for phase-comparison are then transmitted in fixed sequence from first the master station and then a plurality of slave stations, and wherein the trigger and pattern frequency signals are transmitted for fixed intervals and at a fixed repetition rate, an improved receiver/timing apparatus for preventing the phase-comparison process from being affected by false triggering, which comprises:
timing means for generating a first set of sequentially active signals which correspond in sequence and active duration to the trigger and pattern frequency sequence and transmission intervals, respectively, and which have a repetition rate which is identical to the repetition rate of the transmitted trigger and pattern frequency intervals;
means for receiving the transmitted continuous wave signals;
means in association with said receiving means for deriving an IF signal from the received trigger signal; and
a trigger processor which determines if a predetermined continuous portion of the derived IF signal meets acceptable frequency criteria and which resets the timing means to a state corresponding to the beginning of the pattern frequency transmission intervals if the predetermined continuous portion of the derived IF signal meets acceptable frequency criteria.

4,063,245
MICROSTRIP ANTENNA ARRAYS
James Roderick James, and Geoffrey John Wilson, both of Swindon, England, assignors to The Secretary of State for Defence in Her Britannic Majesty's Government of the United Kingdom of Great Britain and Northern Ireland, London, England
Filed Feb. 13, 1976, Ser. No. 658,000
Claims priority, application United Kingdom, Feb. 17, 1975, 6691/75
Int. Cl.[2] H01Q *1/38*
U.S. Cl. 343—700 MS **7 Claims**

1. A microstrip antenna array comprising a pattern of conducting material on an insulating substrate with a conducting backing wherein said pattern includes an elongated feeder strip and a plurality of elongated radiating antenna elements dis-

posed in spaced relation to one another along at least one edge of said feeder strip, the direction of elongation of each of said antenna elements being transverse to the direction of elongation of said feeder strip, each of said antenna elements consisting of an elongated strip connected at one of its ends to and extending away from said feeder strip, the other end thereof

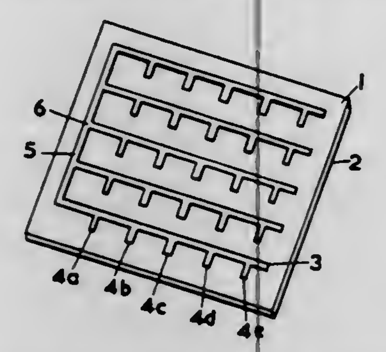

being an opencircuit termination, said elongated radiating antenna elements being of various different widths respectively so as to provide the array with modified directional characteristics, and said antenna elements being approximately an integral number of half wavelengths long relative to electromagnetic waves in said antenna elements at a predetermined operating frequency.

4,063,246
COPLANAR STRIPLINE ANTENNA
John W. Greiser, Marina del Rey, Calif., assignor to Transco Products, Inc., Venice, Calif.
Filed June 1, 1976, Ser. No. 691,239
Int. Cl.² H01Q *1/48;* **H01P** *3/08*
U.S. Cl. 343—700 MS **20 Claims**

1. A coplanar stripline antenna, including
a continuous layer of dielectric material,
a lower ground plane of conductive material supported on one side of the layer of dielectric material,
a patch of conductive material supported on the other side of the layer of dielectric material,
an upper ground plane of conductive material supported on the other side of the layer of dielectric material and with the upper ground plane substantially surrounding and spaced from the patch of conductive material, and
means for feeding electrical signals to the antenna between the patch of conductive material and the upper ground plane and including strip conducter connected to an edge portion of the patch in the plane thereof.

4,063,247
HEATER GLASS SHEET WITH BROAD BAND RECEIVER ANTENNAE
Kaoru Sakurai, Kawasaki; Harunori Murakami; Mitsuhiro Nakamura, both of Yokohama, and Toshinobu Kuroyama, Kasugai, all of Japan, assignors to Nippon Sheet Glass Co., Ltd., Osaka and Toyota Jidosha Kogyo Kabushiki Kaisha, both of, Japan
Filed Oct. 7, 1976, Ser. No. 730,515
Int. Cl.² H01Q *1/02*
U.S. Cl. 343—704 **17 Claims**

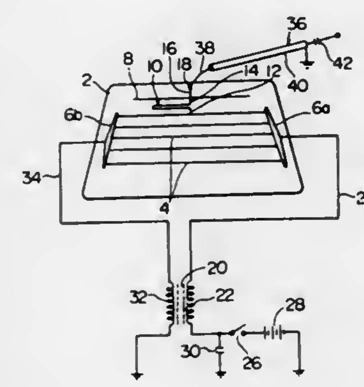

1. A glass sheet having an area to be heated, and broad band receiver antennae, comprising in combination:
1. a glass sheet,
2. a first means provided in the heating area of said glass sheet and capable of functioning both as a heating conductor wire and as a first receiver antenna for receiving electromagnetic waves in a predetermined frequency band,
3. an electric source connected to the first means for supplying a heating current to the first means,
4. a second means provided in an area on the glass sheet other than the heating area and capable of functioning as a second receiver antenna for receiving electromagnetic waves in a higher frequency band than the frequency band for the first receiver antenna,
5. a stub having one end connected to the first means and the other end to the second means, and
6. a feeder connected to the second means.

4,063,248
MULTIPLE POLARIZATION ANTENNA ELEMENT
Thomas R. Debski, Bethpage, and Joseph Gaudio, Coram, both of N.Y., assignors to Sedco Systems, Incorporated, Melville, N.Y.
Filed Apr. 12, 1976, Ser. No. 676,387
Int. Cl.² H01Q *21/24, 21/28*
U.S. Cl. 343—727 **8 Claims**

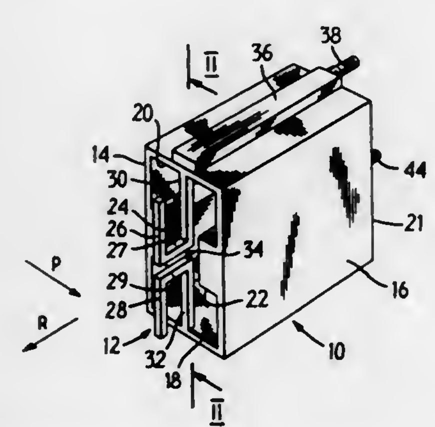

1. An array antenna comprising: a plurality of waveguide radiators each having an aperture and first and second E-plane walls, said radiators being arranged in a predetermined pattern to radiate supplied wave energy signals with a first selected polarization;
a plurality of dipole radiators, each comprising first and second self-supporting conductive dipole members, each of said dipole members including an exposed transverse conductive support member connected to the center of one of said E-plane walls and extending across one of said waveguide apertures perpendicular to said selected polarization, a conductive longitudinal support member projecting outwardly from said aperture, and a transverse conductive dipole arm, supported by said support members, arranged parallel to said transverse support member and spaced a selected distance from said aperture, said dipole members being spaced apart and electrically insulated from each other at the center of each aperture, each of said dipole radiators having a coaxial transmission line for supplying wave energy signals, said transmission line extending through said transverse support of said first dipole member and having an outer conductor coupled to said transverse support member of said first dipole member and an inner conductor coupled to said transverse support member of said second dipole member;
and means for supplying wave energy signals to each of said waveguide and dipole rediators at selected amplitude and phase, the wave energy signals supplied to each of said dipole elements having a selected amplitude and phase with respect to the wave energy signals supplied to each of said waveguide elments, said selected amplitude and phase being the same for all elements;
whereby, when said signals are supplied, said array radiates wave energy signals in a polarization selected in accordance with the relative amplitude and phase of the signals supplied to said waveguide and dipole radiators.

4,063,249
SMALL BROADBAND ANTENNA HAVING POLARIZATION SENSITIVE REFLECTOR SYSTEM
Armin Bergander, Ay, Iller, and Georg Kurz, Ulm, Danube, both of Germany, assignors to Licentia Patent-Verwaltungs-G.m.b.H., Frankfurt am Main, Germany
Filed Nov. 17, 1975, Ser. No. 633,023
Claims priority, application Germany, Nov. 16, 1974, 2454401
Int. Cl.² H01Q *11/10, 15/24*
U.S. Cl. 343—756 **10 Claims**

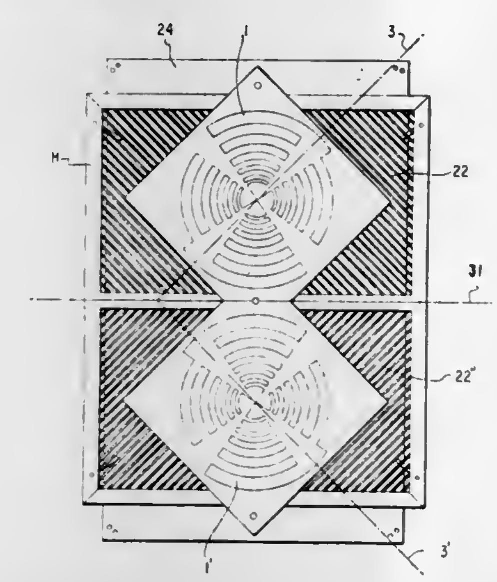

1. A broadband antenna system of small dimensions comprising: an antenna having a frequency dependent polarization characteristic and an associated design operating frequency range; and a plurality of reflectors operatively associated with said antenna and disposed at respectively different distances therefrom, each said reflector being spaced from said antenna and having a reflection characteristic to be optimally matched with said antenna in a manner to enable said system to be operative over a respective partial frequency band at least that reflector which is closest to said antenna being polarization selective, each said reflector being associated with a different respective partial band and having a polarization corresponding to the polarization of said antenna at frequencies within its respective associated partial band, at least one of said reflectors being associated with a partial band extending to a frequency below the lower limit of the design operating frequency range, such that the total operating frequency range of said system is divided into a plurality of partial bands equal in number to the number of said reflectors and covering the design operating frequency range and a further frequency range below the lower limit of the design operating frequency range; whereby the antenna characteristics are improved and particularly the operative bandwidth is enlarged in the low frequency direction.

4,063,250
BEAM AND NULL SWITCH STEP STEERABLE ANTENNA SYSTEM
Richard C. Fenwick, Dallas, Tex., assignor to Electrospace Systems, Inc., Richardson, Tex.
Filed Dec. 16, 1975, Ser. No. 641,304
Int. Cl.² H01Q *3/26*
U.S. Cl. 343—844 **20 Claims**

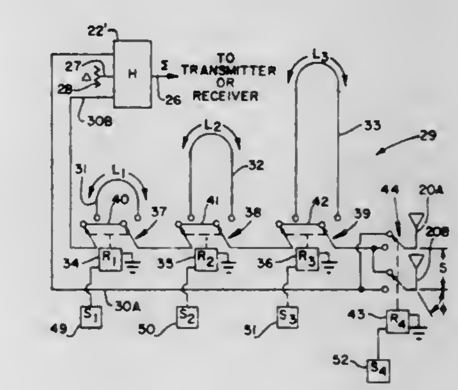

1. In a switch step steerable multi-element antenna array: 2^n antenna elements; combiner means including a hybrid transformer having a sum port, a difference port and two coupled ports connectable to a radio frequency device, and having two transmission lines each connected to a respective coupled port and half of the 2^n antenna elements; and switchable variable delay line length control means in at least one of said two transmission lines for electromagnetic radiation frequency signal step steering; wherein a plurality of delay line segments are included in said switchable variable delay line length control means; switch control means for switching each of said delay line segments into and out of a transmission line; and control structure means interconnecting the switch control means of the delay line segments of a transmission line; and azimuth calibration means in said control structure means; and wherein said hybrid transformer means includes switch means for switch interchanging the connection to said radio frequency device and connection of said hybrid difference port or sum port for switching the antenna array between switchable delay line beam and null steering.

4,063,251
LOCKER SECURITY SYSTEM
Albert G. Harsnett, 31-06 95th St., E. Elmhurst, N.Y. 11369
Filed Sept. 27, 1976, Ser. No. 726,683
Int. Cl.² G01D *9/00;* **G03B** *29/00*
U.S. Cl. 346—33 R **5 Claims**

1. In combination with a storage locker:
a near and remote camera for recording a visual image of a person opening a door of said storage locker; and

a normally open switch means mounted on said storage locker and connected in parallel to said cameras for acti-

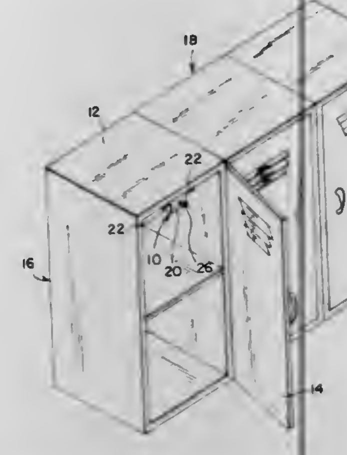

vating the cameras in response to opening of said locker door.

4,063,252

METHOD AND APPARATUS FOR CONTROLLING THE VELOCITY OF INK DROPS IN AN INK JET PRINTER

Donald Frederick Jensen, Endicott; John Carl Tamulis, Binghamton; Thomas Tomasky, Endicott, and Jack Louis Zable, Vestal, all of N.Y., assignors to International Business Machines Corporation, Armonk, N.Y.

Filed Nov. 11, 1976, Ser. No. 740,702

Int. Cl.[2] G01D *18/00*

U.S. Cl. 346—75 **2 Claims**

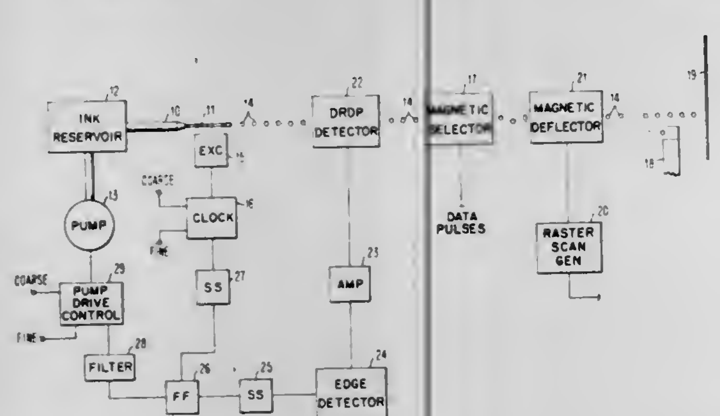

1. In an ink jet printing apparatus, a method for monitoring and maintaining the velocity of an ink jet stream within a predetermined range which determines jet placement during printing of information comprising

projecting a continuous stream of ink drops along a path toward a print medium by supplying liquid ink under pressure to a jet forming means and perturbing said stream to generate ink drops at a uniform frequency,

sensing individual drops of said ink jet stream downstream from said jet forming means and developing a signal representative of the velocity of said ink drops,

determining whether a gross velocity error exists in said stream by generating drops at a first frequency having a rate different from the drop generation rate for printing

adjusting for sensed changes in the velocity of said ink drops generated at said first frequency by effecting a coarse correction in said pressure for supplying liquid ink to said jet forming means in the event a gross velocity error was detected,

determining whether a fine velocity error exists in said stream by generating drops at said drop generation rate for printing,

and then adjusting for sensed changes in the velocity of said ink drops generated at said drop generation rate for printing by making a fine correction in said pressure for supplying ink to said jet forming means in the event a further velocity error was detected.

4,063,253

INK JET RECORDING APPARATUS

Syoichi Ito, Ibaraki, and Toshio Tsubaki, Hitachi, both of Japan, assignors to Hitachi, Ltd., Japan

Filed Mar. 8, 1976, Ser. No. 664,654

Claims priority, application Japan, Mar. 10, 1975, 50-28056

Int. Cl.[2] G01D *18/00*

U.S. Cl. 346—75 **4 Claims**

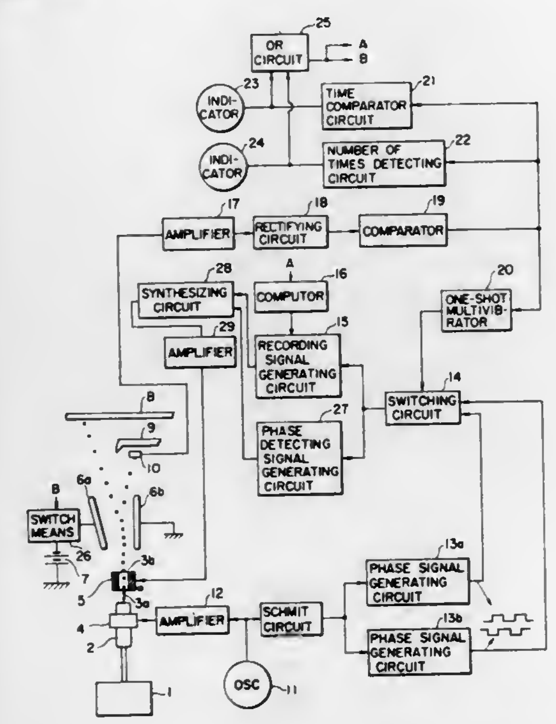

1. In and ink jet recording apparatus comprising nozzle means for jetting an ink plume and for separating the ink plume into ink particles, meand for charging the ink particles issued from the nozzle means in accordance with the potential of electric signals including recording signals and phase detecting signals, means for deflecting the charged ink particles, senser means disposed at a predetermined position for sensing the ink particles charged in accordance with the phase detecting signals and for producing an output in accordance therewith, comparator means for comparing the output from said senser means with a predetermined value and for producing a comparator output, and phase control means for controlling the phase of separation of ink particles and the charging thereof in accordance with the comparator output, the improvement comprising means for detecting the recording condition in accordance with the comparator output, said detecting means including at least one of time comparison circuit means for indicating a disorder in the recording when the comparator output is produced for a predetermined period of time and frequency detecting means for detecting the number of outputs from said comparator means per a predetermined unit time for indicating a disorder in recording when the number of outputs of said comparator means per the unit time reaches a predetermined number.

4,063,254

MULTIPLE ARRAY PRINTER

Sidney Jared Fox, and Van Clifton Martin, both of Boulder, Colo., assignors to International Business Machines Corporation, Armonk, N.Y.

Filed June 28, 1976, Ser. No. 700,424

Int. Cl.[2] G01D *15/18;* **B41J** *1/00*

U.S. Cl. 346—75 **8 Claims**

1. An interlaced multiple element printer mechanism suitable for use in a copier or the like comprising:

a member for supporting a media suitable for receiving indicia on at least one surface thereof;

a support mounted adjacent said at least one surface of said media support member and arranged for relative movement in two substantially orthogonal directions with respect to said media support member;

a plurality of selectively operable marking means (N_T)

mounted on the said support and arranged in at least two substantially parallel linear arrays (M) and (N) marking means each and arranged parallel to one of the directions of relative movement between the media support member and the adjacent support, said selectively operable mark-

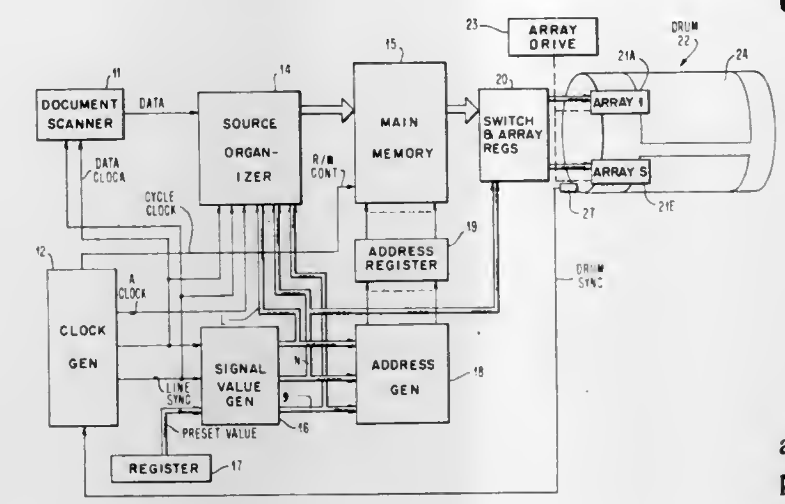

ing means being spaced from each other by a distance equal to (*k*) resolution elements where a resolution element is equal to the distance between successive marks formed on the media in a direction parallel to the lines of marking means when all of the marking elements are operable and in which the fraction

$$\frac{(t\frac{k}{M})}{tN}$$

is irreducible for integer values of *t* and *k;* and

means for simultaneously causing relative movement in the said two substantially orthogonal directions so that the marking means advance with respect to the media support in a direction parallel to the lines of marking means N_T resolution elements while the line of marking means move across the media in the said other direction in its entirety one time.

4,063,255

ELECTRO EROSION PRINTING HEAD

Dietrich Juergen Bahr, and Karl Heinz Burckardt, both of Herrenberg, Germany, assignors to International Business Machines Corporation, Armonk, N.Y.

Filed June 17, 1976, Ser. No. 696,975

Claims priority, application Germany, July 10, 1975, 2530888

Int. Cl.[2] G01D *15/16, 15/10*

U.S. Cl. 346—139 C **7 Claims**

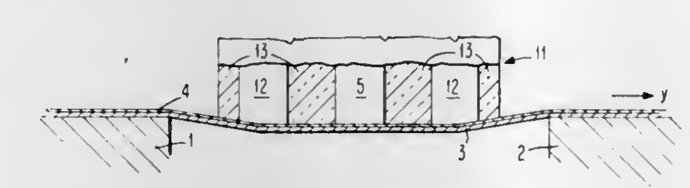

1. A printing head for electro-erosion printing upon a web carrying a metallic layer adapted for burnt out marking, or erosion, comprising in combination,

a plurality of writing electrodes each insulated from the others all being in contact with said metallic covered web and

plural blind guide electrodes insulated from each other and from all the writing electrodes whereby the blind guide electrodes are adapted to assume a relatively greater amount of wear than do the writing electrodes and to provide a uniform contact pressure of the metallic layered web upon the writing electrodes.

4,063,256

PHOTOCOMPOSITION MACHINE FONT SOURCE

Francis S. Szabo, Morristown, N.J., assignor to Addressograph-Multigraph Corporation, Cleveland, Ohio

Filed Apr. 30, 1976, Ser. No. 682,186

Int. Cl.[2] B41B *17/32*

U.S. Cl. 354—13 **8 Claims**

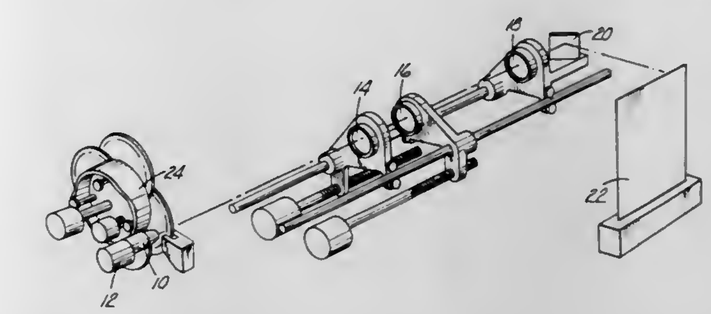

1. A photocomposition system wherein an optical system and a holder for photosensitive material are supplied with a projectable font by a rotating disc font transparency, the improvement in a multiple disc font holder, comprising:

a turret;

means mounting said turret for rotation about an axis in a selected space position;

motor means for driving said turret rotationally about the axis thereof;

means mounting said turret for bodily shifting along said axis;

means for shifting said turret on said mounting means as the turret is rotated;

a plurality of font disc mount hubs carried by said turret spaced apart a distance less than the diameter of the font disc mounted thereon, said hubs being each different in height from adjacent hubs to space the discs mounted thereon at different distances from the turret in overlapping relationship, and the hubs positioned to extend a portion of each mounted disc beyond the parameter of said turret;

said optical system having a fixed source of projection light located adjacent said turret and directed in a direction generally parallel to the turret axis, and a primary lens spaced therefrom;

said shifting means being configured to shift the turret a distance which will position a selected mount hub to position a disc carried thereon into the optical system;

detent means for establishing a final operating position of a mounted disc rotated and shifted into place between said light source and lens; and

drive means for rotating a mounted disc positioned in said optical system.

4,063,257

EXPOSURE CONTROL SYSTEM

Yukio Mashimo, Tokyo; Takashi Uchiyama, and Kanehiro Sorimachi, both of Yokohama, all of Japan, assignors to Canon Kabushiki Kaisha, Tokyo, Japan

Continuation-in-part of Ser. No. 301,779, Oct. 30, 1972, abandoned, which is a continuation of Ser. No. 85,438, Oct. 30, 1970, abandoned. This application Nov. 9, 1973, Ser. No. 414,455

Claims priority, application Japan, Nov. 6, 1969, 44-88873; Dec. 27, 1969, 44-1328; Dec. 27, 1969, 44-1329; Sept. 21, 1970, 45-83119

Int. Cl.[2] G03B *7/08*

U.S. Cl. 354—31 **41 Claims**

1. An exposure control system for a camera capable of carrying film and has supplemental lighting means, comprising exposure forming means for regulating the aperture and exposure speed to which the film is to be subjected, first photoelectric means for responding to overall light from a scene to be photographed, second photoelectric means for responding to light from a predetermined portion of the scene to be photographed less than the overall scene, and exposure control

means coupled to said first and second photoelectric means and said exposure forming means for controlling said exposure

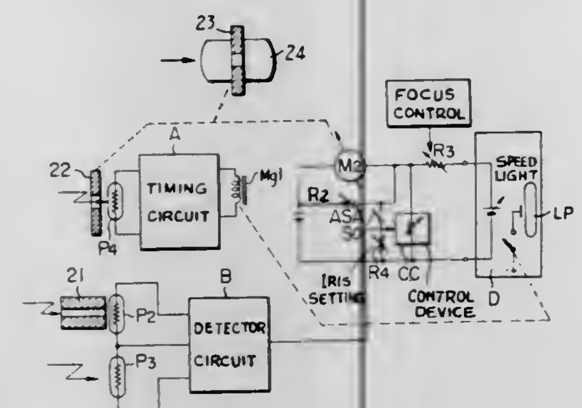

forming means to expose the film on the basis of at least the relationship between the response of said first photoelectric means and second photoelectric means.

4,063,258
SPOTLIGHT MOUNTED CAMERA FOR VEHICLES
Robert H. Allen, 2206 Prospect St., La Crosse, Wis. 54601
Filed July 15, 1976, Ser. No. 705,587
Int. Cl.² G03B *15/02, 29/00*
U.S. Cl. 354—81 **8 Claims**

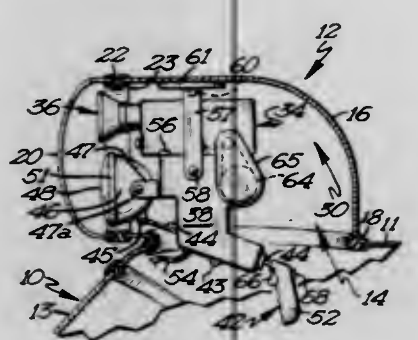

1. A combined spotlight and camera assembly mounted on a vehicle, said assembly comprising:
a spotlight for illuminating a subject to be photographed, said spotlight being supported externally of a vehicle on mounting means for pivotal movement horizontally and vertically;
a camera for photographing a subject, said camera being connected to said spotlight and mechanically movable therewith on said mounting means;
an extension of said mounting means projecting inside the vehicle and having a hand gripping segment thereon, said hand grip segment being manipulable inside the vehicle to simultaneously aim said spotlight, and said camera therewith, towards a subject of pivotal movement on said mounting means, whereby said camera may be utilized to photograph a subject after being directed to the subject with the spotlight to which it is connected; and
means for actuating said camera mounted on said extension within the vehicle.

4,063,259
METHOD OF MATCHING GOLFER WITH GOLF BALL, GOLF CLUB, OR STYLE OF PLAY
Francis deSales Lynch; Walter L. Reid, Jr., both of Mattapoisett, and John W. Jepson, Marion, all of Mass., assignors to Acushnet Company, New Bedford, Mass.
Filed Oct. 29, 1975, Ser. No. 626,712
Int. Cl.² G03B *1/00*
U.S. Cl. 354—120 **16 Claims**

1. An aid for golfers for use in matching a golfer to a golf ball, golf club or style of play which comprises:
a. a series of charts which compare initial velocity, initial spin velocity, launch angle and golf ball carry at a plurality of points for an at least one golf ball;
b. apparatus for measuring a golfer's launch conditions including initial velocity, initial spin velocity and launch angle when a golfer hits a golf ball with a golf club comprising;
i. recording means for recording the lineal position and the rotational position of the golf ball at a plurality of time intervals;

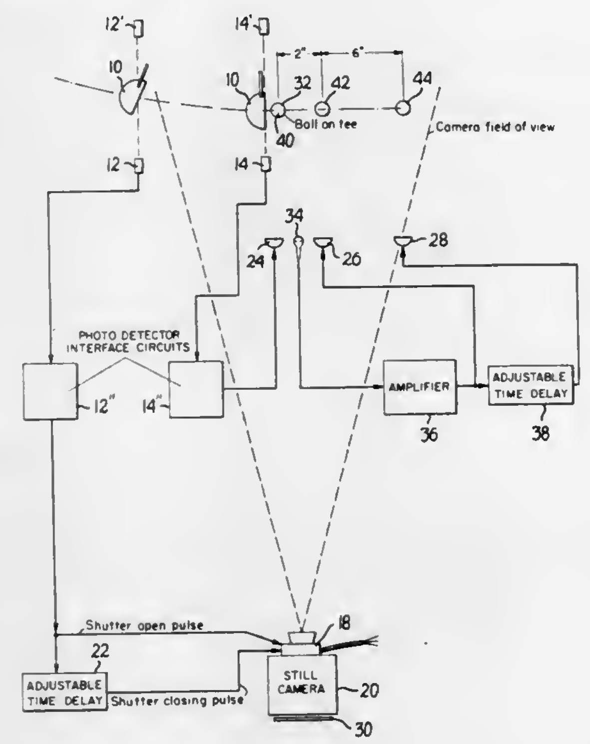

ii. first communicating means for communicating to the recording means the lineal position and the rotational position of the golf ball at a first point in time; and
iii. second communicating means for communicating to the recording means, the lineal position and the rotational position of the golf ball at a second point in time subsequent to the said first point in time.
c. said launch condition measured by said apparatus for measuring being relatable to said series of charts.

4,063,260
CAMERA WITH AN INTERNALLY ARRANGED ELECTRONIC FLASH DEVICE
Sakae Toyoshima, Hirakata, Japan, assignor to West Electric Company, Ltd., Osaka, Japan
Continuation of Ser. No. 425,859, Dec. 18, 1973, abandoned. This application Dec. 15, 1975, Ser. No. 640,968
Claims priority, application Japan, Dec. 20, 1972, 47-128510
Int. Cl.² G03B *15/05, 9/04*
U.S. Cl. 354—149 **5 Claims**

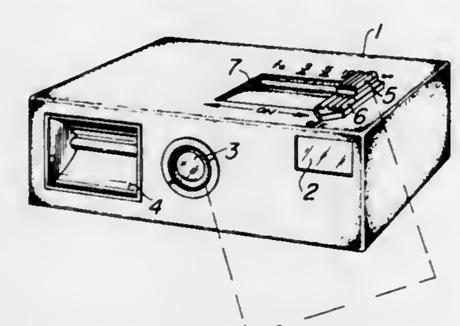

1. A photographic camera having a built-in electronic flash device and a power source connectable to the flash device, comprising:
a. a housing having a groove;
b. a photographic objective lens within said housing, said

lens being movable forward and backward along an optical axis of said lens;
c. first knob means slidably movable along said groove for actuating focus adjusting means for moving said lens along said optical axis;
d. second knob means slidably movable along said groove between ON and OFF positions, said second knob means when moved to said ON position connecting said power source to said flash device and disconnecting said power source from said flash device when in the OFF position, said second knob means having an arm for slidably moving said first knob means simultaneously with said second knob means when said second knob means is moved along said groove within the ON position range; and
e. means operatively connected to said second knob means for selecting the rate of passage of light to said lens; said first knob means sliding within said groove when said second knob means is moved to said ON position thereby actuating said focus adjusting means to provide focal adjustment and said means for selecting the rate of passage of light to said lens simultaneously with connection of said power source to said flash device, said first knob means being slidable solely along said groove when said second knob means is at said OFF position.

4,063,261
VIEW FINDER OPTICAL SYSTEM
Makoto Kuboshima, Tokyo, Japan, assignor to Fuji Photo Film Co., Ltd., Japan
Filed Nov. 15, 1976, Ser. No. 741,963
Claims priority, application Japan, Nov. 14, 1975, 50-136996
Int. Cl.² G03B *13/08*
U.S. Cl. 354—225 **7 Claims**

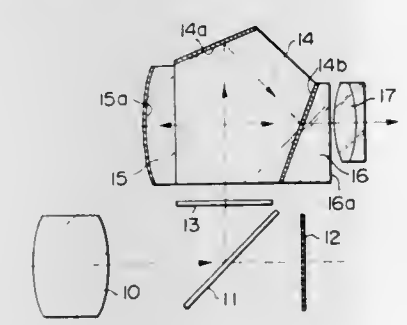

1. A view finder optical system for a reflex camera having a focusing plate on the top thereof comprising a reflecting surface lying above the focusing plate for reflecting backward and downward the light from the focusing plate, a semi-transparent plane for reflecting the light from the reflecting surface forward in parallel to the face of the focusing plate, an image erecting-and-reflecting optical means positioned ahead of the semi-transparent plane to reflect the light therefrom backward thereto for forming an erect image behind the semi-transparent plane, and an eyepiece positioned behind the semi-transparent plane for viewing the erecting image therethrough.

4,063,262
SHUTTER BLADE ASSEMBLY FOR FOCAL PLANE SHUTTERS
Nobuyoshi Inoue, Kawagoe, Japan, assignor to Copal Company Limited, Japan
Filed May 4, 1976, Ser. No. 683,202
Claims priority, application Japan, May 12, 1975, 50-63347
Int. Cl.² G03B *9/20*
U.S. Cl. 354—246 **2 Claims**

1. A shutter blade assembly for focal plane shutters comprising a shutter plate having an exposure aperture therein, a finder device arranged on the shutter plate in spaced relationship with the upper edge of said aperture, a pair of arms each respectively pivoted at one of its ends to spaced locations on said shutter plate at one side of the exposure aperture, and a shutter blade for forming an exposure slit, said blade comprising an end edge portion and a remaining portion having a width which is smaller than the edge portion and less than the space between the finder device and the upper edge of the aperture, said edge portion of the shutter blade being pivotally connected at separate points to the other ends of said arms, the

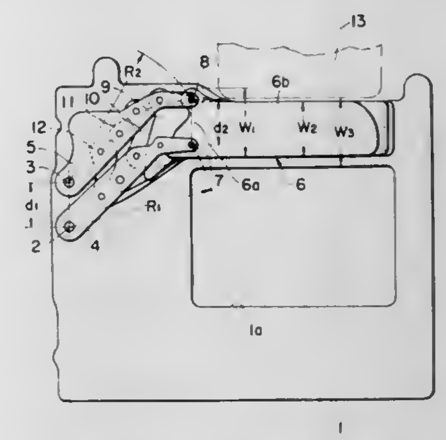

edge portion being positioned proximate said one side of the exposure aperture whereby when the shutter blade is positioned such that said remaining portion occupies the space between the finder and the upper edge of the aperture, the end edge portion is disposed to one side of the finder device.

4,063,263
MANUALLY OPERATED SHUTTER ATTACHMENT
John J. Krewalk, Sr., West Hartford, Conn., assignor to Criterion Manufacturing Company, Inc., West Hartford, Conn.
Filed Apr. 15, 1976, Ser. No. 677,269
Int. Cl.² G03B *9/26;* **G02B** *7/02, 5/22*
U.S. Cl. 354—253 **10 Claims**

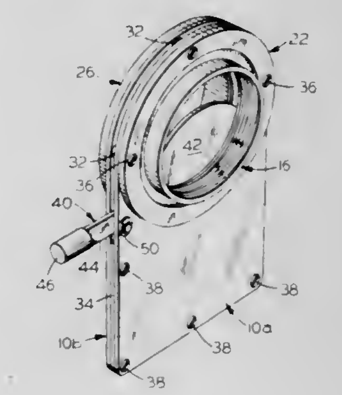

1. A manually operated shutter attachment consisting essentially of:
A. a pair of plate members each having an aperture therethrough of lesser width than the width of said plate members, and means securing said plate members in spaced parallel relationship with said apertures being aligned to provide a ligh passage through said shutter attachment;
B. a manually movable blade member slidably disposed between said plate members and having a body portion registerable with said apertures of said plate members and a handle portion extending outwardly of said plate members for effecting manual movement of said body portion between a first position wherein said body registers with said apertures and a second position wherein said body portion is removed from registration with said apertures;
C. means slidably mounting said blade member between said plate members for movement between said first and second position;
D. a first mounting means on the outer surface of one of said plate members extending about the aperture thereof and adapted for securing said shutter attachment to a camera or the like; and
E. a second mounting means on the outer surface of the other of said plate members extending about the aperture thereof and adapted for securing said shutter attachment

to a telescope or the like, said attachment comprising an integrated independent assembly assemblable and removable as a unit from an associated telescope and camera.

4,063,264
MEANS FOR MOUNTING AN INTERCHANGEABLE LENS ON A SINGLE LENS REFLEX CAMERA
Yoshikazu Ando, Musashino, and Junichi Yokozato, Kawagoe, both of Japan, assignors to Zenza Bronica Industries, Inc., Tokyo, Japan
Filed July 26, 1976, Ser. No. 708,742
Int. Cl.² G03B *17/00*
U.S. Cl. 354—286 4 Claims

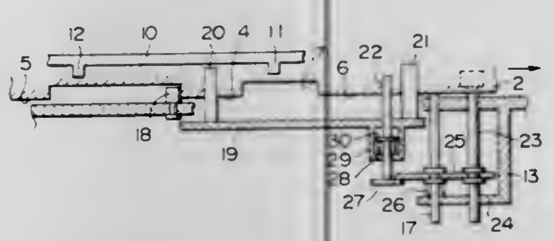

1. A means for mounting an interchangeable lens to a camera body wherein the interchangeable lens has a shutter unit and at least one connecting pin associated with the shutter unit is provided on the rear face of the interchangeable lens, said connecting pin being movable along an arcuate path concentrically extending with the lens barrel of the interchangeable lens, said camera body having a rotatable shutter drive ring rotatable about an axis which is aligned with the axis of said lens barrel, said mounting means comprising:
- a fixed pin secured to said rotatable shutter drive ring and extended to the front at a front face of the camera body,
- an axially movable pin mounted on said rotatable shutter drive ring at a position separated from said fixed pin with a space therebetween, said space being large enough to allow said connecting pin of the lens to be positioned therein, said axially movable pin being movable between a projected position and a retracted position and being spring urged to the projected position, said movable pin holding said connecting pin between the same and said fixed pin when the same is in said projected position,
- a lock pin provided on the front face of the camera body extending in parallel to said axially movable pin and said fixed pin, said lock pin being axially movable between a projected position and a retracted position and being spring urged to the projected position,
- a release member coupled to said lock pin and engageable with said axially movable pin so that the latter is moved from said projected position to said retracted position in response to the movement of said lock pin from said projected position to said retracted position,
- an abutment portion formed on the rear face of the interchangeable lens which is brought into abutment with said lock pin to depress the same from said projected position to said retracted position when the interchangeable lens is attached to the front face of the camera body, and
- a recessed portion formed adjacent to said abutment portion on the rear face of the interchangeable lens which is brought into engagement with said lock pin, when the interchangeable lens is rotated up to a position where said connecting pin is located between said fixed pin and said axially movable pin, and allows said lock pin to return from said retracted position to said projected position,
- whereby said connecting pin of the interchangeable lens is sandwiched between said fixed pin and said axially movable pin when the interchangeable lens is rotated by a predetermined angle.

4,063,265
APPARATUS FOR TAKING STEREOSCOPIC PICTURES
Allen Kwok Wah Lo, Atlanta, and Jerry Curtis Nims, Dunwoody, both of Ga., assignors to Dimensional Development Corporation, Atlanta, Ga.
Division of Ser. No. 508,810, Sept. 24, 1974, Pat. No. 3,960,563, which is a continuation-in-part of Ser. No. 398,990, Sept. 20, 1973, abandoned, which is a continuation-in-part of Ser. No. 292,796, Sept. 27, 1972, abandoned. This application Mar. 15, 1976, Ser. No. 666,864
Int. Cl.² G03B *17/00*
U.S. Cl. 354—294 11 Claims

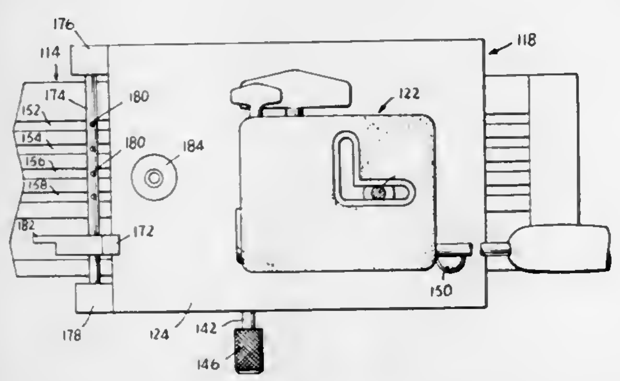

1. A camera support assembly for obtaining a sequence of negatives from which a stereoscopic picture of the type including a viewing lenticular screen of lenticule width W may be composed, comprising in combination:
- support means for disposition relative to a scene to be photographed;
- means on said support means forming a plurality of substantially straight elongate tracks which extend lengthwise of the support means and which are spaced apart in substantially parallel relation transversely of the support means, means associated with each of said tracks defining at least one scale comprised of a plurality N of vantage points equidistantly spaced along said track, each scale having a different length T between the endmost vantage points thereof than any other scale on said support means, and
- slide means movably carried by said support means for coating with a selected one of said scales to sequentially position a camera of focal length *f*, supported by said slide means, at said N vantage points along said selected scale with the optical axis of the camera when at said each vantage point substantially parallel to the optical axis of the camera when at the other vantage points along said scale.

4,063,266
ADJUSTABLE POLARIZED FILTERS FOR CAMERAS
Robert R. Thomas, and Camille C. Thomas, both of 5180 Revere St., Apt. No. 1, Chino, Calif. 91710
Filed Sept. 20, 1976, Ser. No. 724,712
Int. Cl.² G02B *5/22, 5/30;* G03B *11/00*
U.S. Cl. 354—295 7 Claims

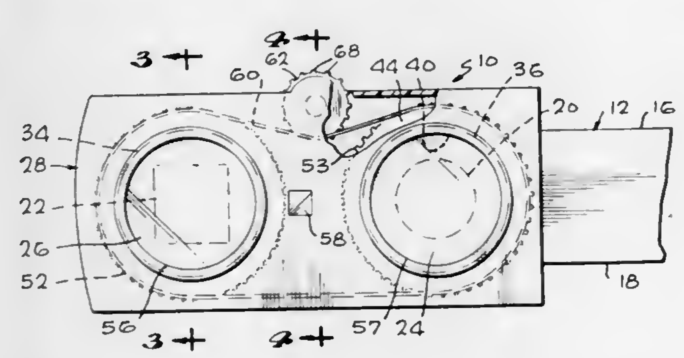

1. Adjustable polarized filters for cameras comprising:

- a filter case, means on said filter case for detachable attachment of said filter case on a camera body;
- an aperture in said filter case positioned to be in front of the viewfinder and another aperture in said filter case positioned to be in front of the lens of the camera when said filter is mounted on the camera body;
- a cylindrical boss around each of said apertures;
- first and second polarized filters in said filter case;
- a pair of filter retainers, each of said filter retainers being formed of a cylindrical shell and an inwardly directed flange, each said filter being positioned inside said shell and secured against said flange so that each said filter rotates with its filter retainer, said filter retainers being respectively mounted on said bosses so that said polarized filters are positioned in said filter case for being positioned over the viewfinder and over the photographic lens of the camera when said filter case is mounted on a camera body; and
- a belt connected around said filter retainers, means engaging said belt for manual movement of said belt so that, upon motion of said belt, both of said filters rotate the same angular amount.

4,063,267
MNOS MEMORY DEVICE
Yukun Hsia, Saratoga, Calif., assignor to McDonnell Douglas Corporation, Long Beach, Calif.
Filed June 21, 1976, Ser. No. 698,437
Int. Cl.² H01L *29/78*
U.S. Cl. 357—23 16 Claims

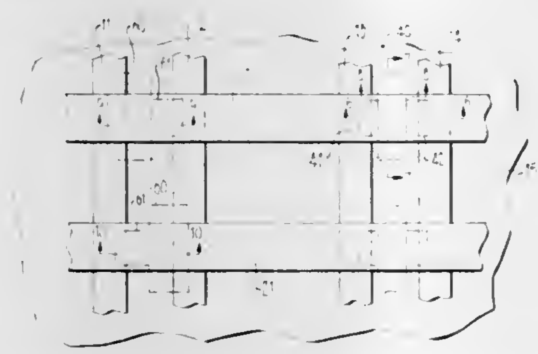

1. An insulative gate field effect transistor comprising:
- a semiconductive substrate of a first conductivity type;
- a pair of spaced semiconductive diffusion regions of opposite conductivity type to said substrate formed in said substrate, said diffusion regions being separated by an interstitial portion of said substrate and sharing a common boundary surface therewith;
- a layer of oxide material adhered to said common boundary surface, said layer having a portion of minimum thickness in the region thereof overlying said interstitial portion of said substrate, a portion of intermediate thickness partially overlying at least one of said pair of diffusion regions and said interstitial portion of said substrate, and a remaining portion of maximum thickness;
- a layer of dielectric material adhered to said oxide layer; and
- an electrically conductive electrode of predetermined width adhered to said dielectric layer in the region overlying said interstitial substrate portion;
- said oxide layer portion of minimum thickness having a width greater than the width of said electrically conductive electrode to define with the overlying portion of said dielectric layer and the underlying portion of said semiconductive substrate an insulative gate region;
- said oxide layer portion of intermediate thickness having a width less than the width of said electrically conductive electrode to define with the underlying portion of said semiconductive substrate an MOS gate region.

4,063,268
SILICON-POLYSILICON INFRARED IMAGE DEVICE WITH ORIENTIALLY ETCHED DETECTOR
Gerard J. King, Alexandria, Va., assignor to The United States of America as represented by the Secretary of the Army, Washington, D.C.
Filed July 15, 1976, Ser. No. 705,500
Int. Cl.² H01L *27/14*
U.S. Cl. 357—30 6 Claims

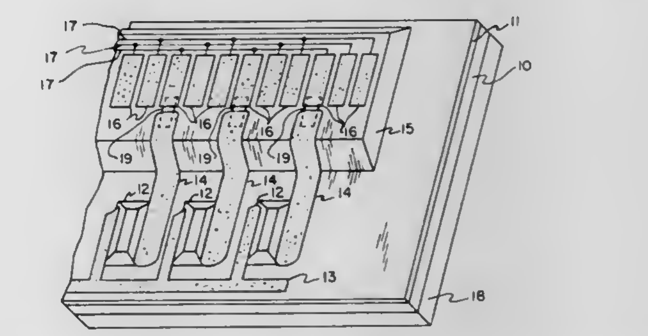

1. An imaging infrared detector device including an infrared transparent support substrate:
- an infrared transparent insulating layer on one side of said substrate;
- an array of infrared detectors on said insulating layer, each detector being a frustum of a right rectangular pyramid with its base on said insulating layer;
- electrical readout means including a common connector to one side of each of said detectors, and individual connectors to an opposite side of each of said detectors; and
- a perforated mask on the opposite side of said substrate from said insulating layer, with respective perforations aligned with an end of respective detectors.

4,063,269
SEMICONDUCTOR PHOTOELECTRON EMISSION DEVICE
Katsuo Hara; Minoru Hagino, and Tokuzo Sukegawa, all of Hamamatsu, Japan, assignors to Hamamatsu Terebi Kabushiki Kaisha, Hamamatsu, Japan
Division of Ser. No. 647,761, Jan. 9, 1976, which is a division of Ser. No. 455,231, March 27, 1974, Pat. No. 3,953,880. This application Oct. 26, 1976, Ser. No. 735,332
Int. Cl.² H01L *27/14, 29/161*
U.S. Cl. 357—30 5 Claims

1. A semiconductor photoelectron emission device comprising: ohmic contacts;
- a first layer of p-type $Al_xGa_{(1-x)}Sb$, wherein x is a positive number less than 1, having high impurity concentration and predetermined forbidden band and being of an indirect transition type semiconductor;
- a second layer of $Al_xGa_{(1-x)}Sb$ having a low impurity concentration and wider forbidden band;
- a third layer of n-type GaSb, said third layer having at selected portions, different layers of direct transition type semiconductor of p-type impurity thereby to form thereat with said first layer a heterojunction; said third layer and said first layer having substantially the same crystal structures at said junction and having small differences in lattic constants;
- a fourth layer at parts of said third layer substantially absent said diffused p-type impurity, said fourth layer comprising high concentration p-type $Al_xGa_{(1-x)}Sb$;
- a fifth layer of p-type GaSb on said fourth layer; and electrodes on said fifth layer, whereby said ohmic contacts are

disposed on said first layer at selected areas wherein transversely are absent said diffused p-type impurities, and said first layer has an electron emissive surface at areas not covered by said ohmic contacts and thereby to form a transmission type device.

4,063,270
SEMICONDUCTOR CONTROLLED RECTIFIER DEVICE HAVING AMPLIFYING GATE STRUCTURE
Shin Kimura, Hitachi, and Yoshio Terasawa, Katsuta, both of Japan, assignors to Hitachi, Ltd., Japan
Filed May 18, 1976, Ser. No. 687,745
Claims priority, application Japan, June 4, 1975, 50-66466
Int. Cl.² H01L *29/74*
U.S. Cl. 357—38 **11 Claims**

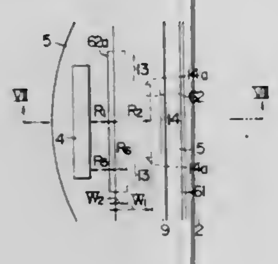

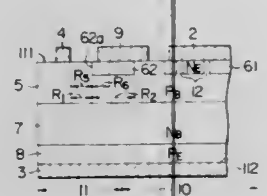

1. A semiconductor controlled rectifier device comprising a semiconductor substrate consisting of a plurality of layers of alternately different conductivity types and having a first and a second principle surface opposite to each other, the first layer exposed at said first principal surface of said semiconductor substrate being divided into a first portion and a second portion having an area smaller than that of said first portion, and the second layer continuous to the first layer having a portion thereof exposed at said first principal surface, a first main electrode disposed on said first principal surface and making ohmic contact with said first portion of said first layer, a gate electrode disposed on said first principal surface adjacent to said second portion of said first layer and making ohmic contact with the second layer, said gate electrode having a contact area with the second layer with an edge of substantial length, an auxiliary gate electrode disposed on said first principal surface adjacent to at least a part of said first portion and making ohmic contact with said second layer and at least a part of said second portion of said first layer, and a second main electrode disposed at a predetermined position on a selected one of said first and second principal surfaces, said second portion of said first layer defining between it and said second layer a junction adjacent to said gate electrode with an end exposed at said first principal surface, said exposed end extending substantially in parallel with said edge of the contact area, wherein said second portion of said first layer comprises a first region extending away from said gate electrode to have a predetermined effective width measured from said junction, and a second region extending away from said gate electrode contiguous to said first region to have an effective width smaller than said predetermined effective width measured from said junction.

4,063,271
FET AND BIPOLAR DEVICE AND CIRCUIT PROCESS WITH MAXIMUM JUNCTION CONTROL
Kenneth E. Bean, and William W. Lloyd, both of Richardson, Tex., assignors to Texas Instruments Incorporated, Dallas, Tex.
Filed July 26, 1972, Ser. No. 275,116
Int. Cl.² H01L *27/12, 29/80, 27/02, 29/06*
U.S. Cl. 357—49 **7 Claims**

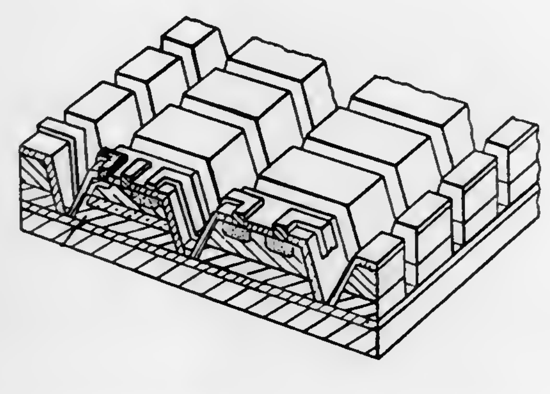

1. A semiconductor dielectrically isolated mesa junction field-effect transistor having a precisely controlled junction thickness comprising in combination:
a. a first epitaxial layer of monocrystalline semiconductor material of one conductivity type;
b. a second epitaxial layer of monocrystalline semiconductor material of the opposite conductivity type overlying said first layer to provide a channel layer;
c. a groove circumscribing said first and second layers to provide an air isolated single crystal mesa comprising said layers,
d. a first plurality of semiconductor regions having said opposite conductivity type spaced within the surface of said second layer, said first plurality providing source and drain regions; and
e. a second plurality of semiconductor regions having said one conductivity type spaced within the surface of said second layer, alternately positioned between said first plurality, said second plurality providing front gate regions.

4,063,272
SEMICONDUCTOR DEVICE AND METHOD OF MANUFACTURE THEREOF
John K. Boah, Kumasi, Ghana, and Richard W. Kennedy, Skaneateles, N.Y., assignors to General Electric Company, Auburn, N.Y.
Filed Nov. 26, 1975, Ser. No. 635,747
Int. Cl.² H01L *27/04, 27/12, 29/06, 29/04*
U.S. Cl. 357—50 **15 Claims**

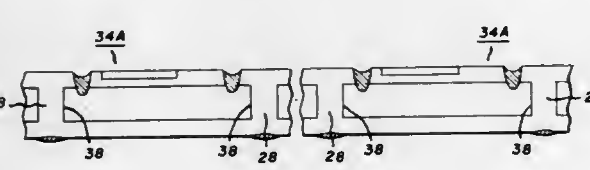

1. A semiconductor device pellet comprising:
a pellet of semiconductor material defining two major surfaces, said pellet comprising three stacked regions, the interior region being of one conductivity type and the outer regions being of the opposite conductivity type with the interfaces of said regions defining respective P/N junctions;
a peripheral isolation region extending from one major face to the other, said isolation region being of the opposite conductivity type and being formed by thermomigration of an impurity which imparts said opposite conductity type;

said isolation region having said impurity uniformly distributed therein in a concentration substantially equal to the solid solubility concentration of said impurity in said semiconductor material;
said isolation region having an interior sidewall intersecting perpendicularly the interfaces between said interior region and both of said outer regions, and said isolation region thereby forming with said outer regions a complete enclosure of opposite conductivity type surrounding said interior region;
a peripheral groove formed in one of said major surfaces and extending completely through one of said outer regions and bottoming in said interior region:
the portion of said one major surface which is surrounded by said groove being thereby electrically isolated from the remainder of said one major surface; and
passivation material in said groove covering the edges of the intersection of said interior region with said groove.

4,063,273
FUNDAMENTAL LOGIC CIRCUIT
Ruediger Müeller, Munich, Germany, assignor to Siemens Aktiengesellschaft, Berlin & Munich, Germany
Filed July 6, 1976, Ser. No. 703,016
Claims priority, application Germany, Sept. 2, 1975, 2539967
Int. Cl.² H01L *29/78, 27/02*
U.S. Cl. 357—43 **13 Claims**

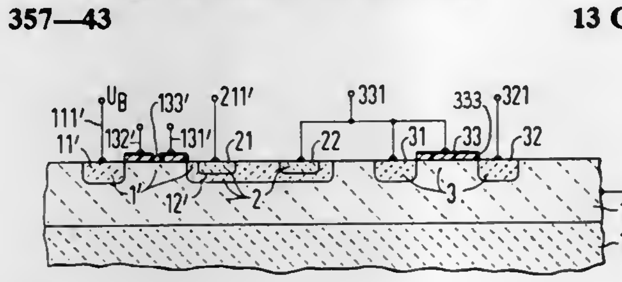

1. A logic circuit comprising:
a semiconductor layer having a terminal for receiving a supply potential; and
a plurality of circuit elements carried by said semiconductor layer defining
a multiple gate field effect transistor the gates of which represent the logic inputs of said logic circuit, and
a multiple emitter bipolar transistor integrated with said field effect transistor, at least one of the emitters representing the output of said logic circuit.

4,063,274
INTEGRATED CIRCUIT DEVICE INCLUDING BOTH N-CHANNEL AND P-CHANNEL INSULATED GATE FIELD EFFECT TRANSISTORS
Andrew Gordon Francis Dingwall, Bridgewater, N.J., assignor to RCA Corporation, New York, N.Y.
Filed Dec. 10, 1976, Ser. No. 749,255
Int. Cl.² H01L *29/40*
U.S. Cl. 357—53 **7 Claims**

1. An integrated circuit device comprising:
a. a body of semiconductor material predominantly of one conductivity type, said body having a surface;
b. a field shield comprising a first frame-like structure including a layer of insulating material on said surface and a layer of conductive material on said layer of insulating material, said field shield having a closed geometry which encloses a first portion of said surface and separates said first portion of said surface from a second portion of said surface;
c. a well region having a conductivity type opposite that of said body, said well region extending into said body only from said first portion of said surface;
d. a well contact for making ohmic contact to said well region, said well contact being totally within the region surrounded by said first frame-like structure including a part of said first portion of said surface;
e. at least one semiconductor device extending into said well region from said first portion of said surface, said semiconductor device comprising:
i. a second frame-like structure including a layer of insulating material on said first portion of said surface and a layer of conductive material on said layer of insulating material, said second frame-like structure having a closed geometry separating an outer portion of said first portion of said surface from an inner portion of said first portion of said surface;
ii. a first region of the same conductivity type as said body extending into said well region from said inner portion of said first portion of said surface, said first region being surrounded by said second frame-like structure;
iii. a second region of the same conductivity type as said body extending into said well region from said outer portion of said first portion of said surface, said second region surrounding said second frame-like structure;
f. a substrate contact for making ohmic contact to said body comprising a guard band immediately surrounding said first frame-like structure, said guard band being of the

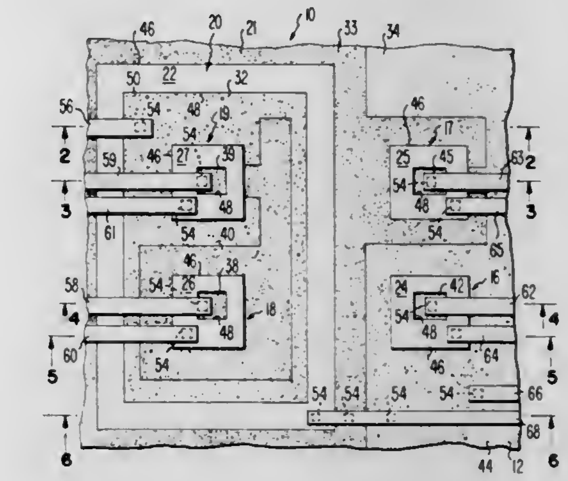

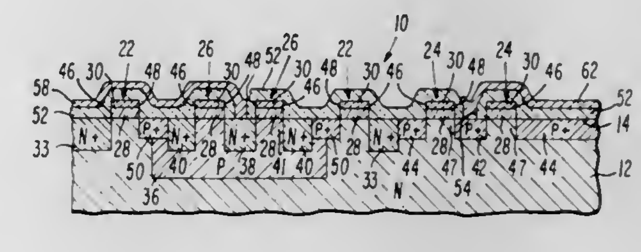

same conductivity as said body and having a higher conductivity than said body;
g. at least one semiconductor device extending into said body from that part of said second portion of said surface lying outside of said guard band, said semiconductor device comprising:
i. a third frame-like structure including a layer of insulating material on said second portion of said surface and a layer of conductive material on said layer of insulating material, said third frame-like structure having a closed geometry separating an outer portion of said second portion of said surface from an inner portion of said second portion of said surface,
ii. a third region of opposite conductivity type to said body extending into said body from said inner portion of said second portion of said surface, said third region being surrounded by said third frame-like structure;
iii. a fourth region of opposite conductivity type to said body extending into said body from said outer portion of said second portion of said surface, said fourth region surrounding said third frame-like structure.

4,063,275
SEMICONDUCTOR DEVICE WITH TWO PASSIVATING LAYERS
Takeshi Matsushita, Sagamihara; Hisao Hayashi, Atsugi; Teruaki Aoki, Tokyo, and Hidenobu Mochizuki, Atsugi, all of Japan, assignors to Sony Corporation, Tokyo, Japan
Filed Oct. 22, 1975, Ser. No. 624,889
Claims priority, application Japan, Oct. 26, 1974, 49-123765
Int. Cl.² H01L *29/04, 23/30*
U.S. Cl. 357—54 **6 Claims**

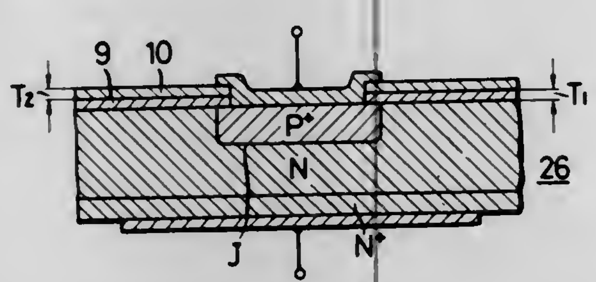

1. A semiconductive device comprising a semiconductive single crystal substrate; a first passivating layer of polycrystalline silicon containing oxygen in the range between 2 and 45 atomic percent on and having a first surface in substantial electrical contact with a first surface of said substrate, a second passivating layer which is selected from the group consisting of polycrystalline silicon containing nitrogen, Si_3N_4, Al_2O_3 and silicone resin on and having a first surface in contact with a second surface of said first passivating layer and said first and second surfaces of said first passivating layer being substantially parallel.

4,063,276
SEMICONDUCTOR PHOTOELECTRON EMISSION DEVICE
Katsuo Hara; Minoru Hagino, and Tokuzo Sukegawa, all of Hamamatsu, Japan, assignors to Hamamatsu Terebi Kabushiki Kaisha, Hamamatsu, Japan
Division of Ser. No. 647,761, Jan. 9, 1976, which is a division of Ser. No. 455,231, March 27, 1974, Pat. No. 3,953,880. This application Oct. 26, 1976, Ser. No. 735,331
Int. Cl.² H01L *27/14, 29/161*
U.S. Cl. 357—30 **6 Claims**

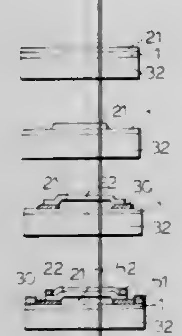

1. A semiconductor photoelectron emission device comprising
- a transparent substrate;
- a first layer of direct transition type semiconductor of p-type GaSb;
- a second layer of $Al_xGa_{(1-x)}Sb$ *wherein* x is a positive number less than one, having high resistance and wide forbidden band on a selected portion of said first layer and defining a heterojunction therewith; said first and second layers having similar crystal structures at said junction and small differences in lattice constants;
- a third layer on other selected portions of said first layer and comprising an insulator or high resistance;
- a pair of electrodes disposed on non-covered areas of said first layer;
- a fourth layer of indirect transition type semiconconductor of p-type $Al_xGa(l-x)Sb$, wherein x is a positive number less than one, having a narrower forbidden band than said second layer of high impurity concentration on selected portions of said third layer and covering said second layer, said fourth layer having an emissive surface on the opposite side, whereby a transmission type device is formed.

4,063,277
SEMICONDUCTOR THYRISTOR DEVICES HAVING BREAKOVER PROTECTION
Kenneth Herbert Gooen, Somerset, N.J., assignor to RCA Corporation, New York, N.Y.
Filed May 28, 1976, Ser. No. 690,902
Int. Cl.² H01L *29/74*
U.S. Cl. 357—38 **13 Claims**

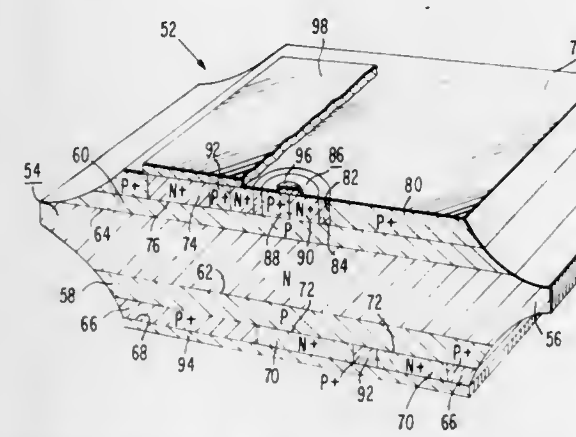

1. A semiconductor device comprising:
- an anode layer of semiconductor material adjacent a first surface of a body of semiconductor material, said anode layer containing one type conductivity modifiers;
- a base layer of semiconductor material within said body adjacent said anode layer, said base layer containing a number of uncompensated second type conductivity modifiers and forming a first PN junction with said anode layer at the interface therewith;
- an active gate region of semiconductor material within said body adjacent said base layer and spaced apart from said anode layer thereby, said active gate region containing a number of uncompensated said one type conductivity modifiers and forming a second PN junction with said base layer at the interface therewith, said number of uncompensated conductivity modifiers in said active gate region being less than that required to break down said second PN junction in an avalanche mode, said number of uncompensated conductivity modifiers in said active gate region being comparatively less than said number of uncompensated conductivity modifiers in said base layer; and
- a cathode layer of semiconductor material adjacent a second major surface, and also adjacent said active gate region, said cathode layer being spaced apart from said base layer thereby, said second surface opposing said first surface, said cathode layer containing said second type conductivity modifiers and forming a third PN junction with said active gate region at the interface therewith.

4,063,278
SEMICONDUCTOR SWITCH HAVING SENSITIVE GATE CHARACTERISTICS AT HIGH TEMPERATURES
Jearld L. Hutson, 2019 W. Valley View Lane, Dallas, Tex. 75234
Continuation of Ser. No. 538,917, Jan. 6, 1975, abandoned. This application Feb. 9, 1977, Ser. No. 767,078
Int. Cl.² H01L *29/74*
U.S. Cl. 357—38 **5 Claims**

1. A sensitive emitter gate silicon controlled rectifier comprising:
- a semiconductor body having at least four layers of alternating first and second opposite conductivity types,

- a first highly doped region of a first conductivity type formed in a first exterior layer of said body of said first conductivity type,
- a second highly doped region of a second conductivity type having an area less than the area of said first region formed in said first exterior layer adjacent said first region, said second region acting as an emitting gate to emit carriers to cause regenerative switching of said rectifier during operation,
- a first electrode forming a cathode for electrically connect-

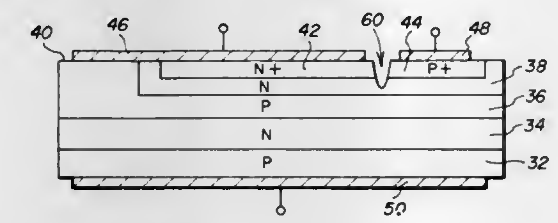

ing an internal layer of said second conductivity type with said first exterior layer and said first region in order to provide a low ohmic resistance path therebetween,
- a second electrode contacting said second region to form a gate, and
- a third electrode forming an anode for contacting only a second exterior layer on the opposite side of said body from said first exterior layer and formed from said second conductivity type, wherein said rectifier may be rendered conductive by a very low level gate signal applied to said gate.

4,063,279
SELF-TRACKING INJECTION LOCK VOLTAGE CONTROLLED OSCILLATOR
Nikola Vidovic, Santa Clara, and Barrett E. Guisinger, Saratoga, both of Calif., assignors to International Video Corporation, Sunnyvale, Calif.
Filed June 28, 1976, Ser. No. 700,382
Int. Cl.² H04N *9/46, 5/795*
U.S. Cl. 358—19 **8 Claims**

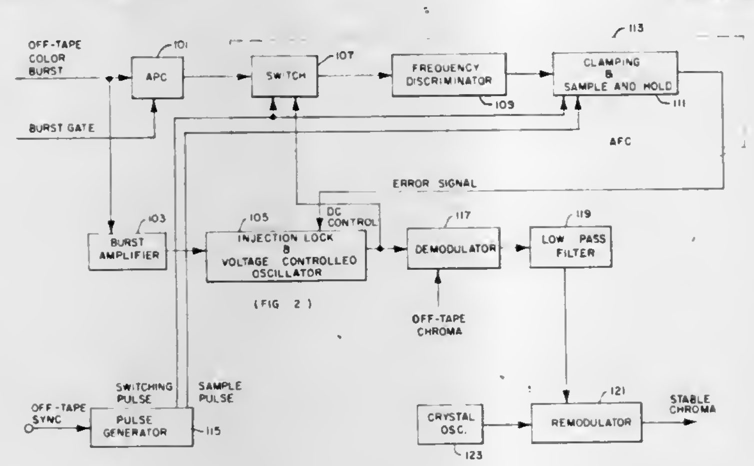

3. In a color television signal reproducing system wherein a reproduced composite color television signal is processed, apparatus for generating a television color subcarrier signal that follows the frequency and phase variations of a repetitive non-continuous television color burst signal of said composite color television signal comprising
- injection lock and voltage controlled oscillator means for generating said color subcarrier signal having a phase locking to the phase of an applied injection lock signal within the time period of said color burst and a frequency responsive to an applied DC control signal,
- means for generating a signal corresponding to the average frequency of said color burst signal,
- automatic frequency control loop means receiving said color burst average frequency signal and said color subcarrier signal for generating an error signal corresponding to the difference in frequency between said color burst average frequency signal and said color subcarrier signal and for applying said error signal to said oscillator means as the applied DC control signal, and
- means for applying said color burst signal to said oscillator means as the applied injection lock signal.

4,063,280
CHROMA-SIGNAL PROCESSING SYSTEM
Hajime Hattori, Ichinomiya; Tadashi Okada, and Eiji Kezuka, both of Yokohama, all of Japan, assignors to Matsushita Electric Industrial Co., Ltd., Osaka and Chubu-Nippon Broadcasting Co., Ltd., Nagoya, both of, Japan
Filed Sept. 27, 1976, Ser. No. 726,783
Claims priority, application Japan, Sept. 30, 1975, 50-118483
Int. Cl.² H04N *9/535*
U.S. Cl. 358—22 **6 Claims**

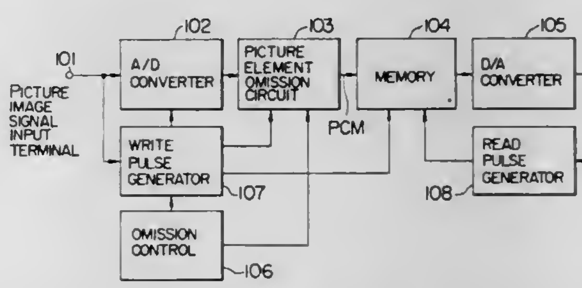

1. A chroma-signal processing system comprising the steps of preparing a sampling signal having a sampling frequency which is n times as high as a frequency of a sub-carrier, n being an integer, sampling a color television signal by said sampling signal, storing chroma components of the sampled color television signals in storage means which are equal in number to the number of sampling points included in one or more cycles of the sub-carrier, reading out the stored chroma components while intermittently omitting portions of the chroma components whereby a continuous color component is reproduced.

4,063,281
MOTION DETECTION EMPLOYING DIRECT FOURIER TRANSFORMS OF IMAGES
Philipp G. Kornreich, North Syracuse, and Stephen T. Kowel, Liverpool, both of N.Y., assignors to Research Corporation, New York, N.Y.
Continuation-in-part of Ser. No. 493,990, Aug. 1, 1974, Ser. No. 365,054, May 30, 1973, Pat. No. 3,836,712, and Ser. No. 434,102, Jan. 17, 1974, said Ser. No. 493,990, and Ser. No. 434,102, each is a continuation-in-part of Ser. No. 319,680, Dec. 29, 1972, abandoned, said Ser. No. 365,054, is a division of Ser. No. 319,680,. This application Aug. 22, 1974, Ser. No. 499,606
Int. Cl.² H04N *3/10, 5/74;* **G08B** *13/24;* **H01L** *41/08*
U.S. Cl. 358—105 **36 Claims**

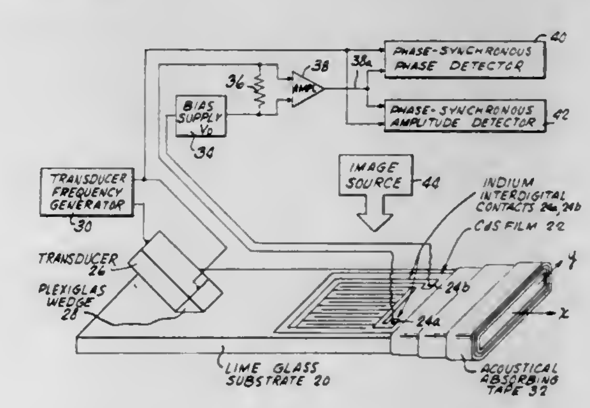

1. A device for detecting motion within an image comprising:
- a medium having an electrical property which varies as a function of an image incident on the medium and as a function of strain disturbances in the medium;
- means for causing the incidence of an image on the medium;

means for causing strain disturbances in the medium; and

means for measuring the electrical property of the medium while said image is incident thereon and while the strain disturbances are present in it to derive an electrical signal which is a Fourier transform representation of the image and means for deriving from said signal an indication of motion within the image.

4,063,282
TV FATIGUE CRACK MONITORING SYSTEM
Reginald J. Exton, Williamsburg, Va., assignor to The United States of America as represented by the Administrator of the National Aeronautics and Space Administration, Washington, D.C.
Filed July 20, 1976, Ser. No. 707,125
Int. Cl.² H04N *7/18*
U.S. Cl. 358—106 **7 Claims**

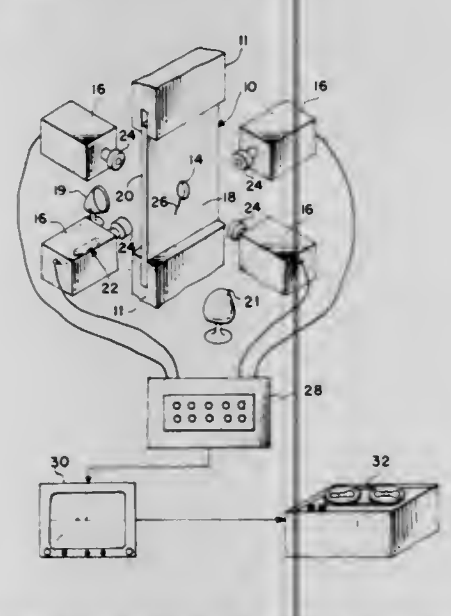

1. A fatigue crack monitoring apparatus comprising a specimen which is subjected to a pulsating tensile load which varies from a maximum to a minimum; a strobe light means for illuminating said specimen; a video means for taking television pictures of said specimen; a display means for displaying said television pictures; and a recording means for recording said television pictures.

4,063,283
AUTOMATIC ENVELOPE MEASURING SYSTEM
Aern E. Rider, and Donald R. Neal, both of Hanover, Pa., assignors to Chemetron Corporation, Chicago, Ill.
Filed Apr. 3, 1975, Ser. No. 564,788
Int. Cl.² H04N *3/00;* **G01C** *3/00;* **G01B** *11/28*
U.S. Cl. 358—107 **24 Claims**

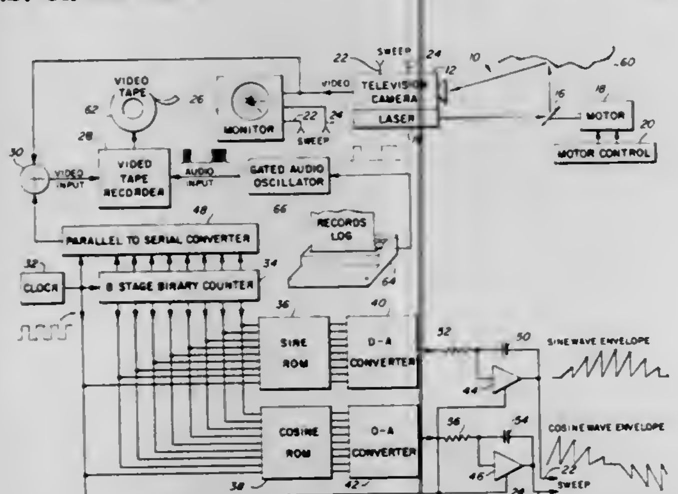

1. Apparatus for determining a clearance envelope along an elongated roadbed, comprising;

means for emitting illumination in a radial direction about an axis parallel to said roadbed;

means including a television camera aimed in a direction parallel to said axis responsive to illumination from said emitting means reflected by an object disposed along the length of and spaced from said roadbed;

means for scanning said television camera with a plurality of radial scans for providing an electrical analog indication of the radial distance between said roadbed and said objects; and

means for recording on a record medium said electrical analog indication.

4,063,284
TIME BASE CORRECTOR
Mitsushige Tatami, Yokohama, Japan, assignor to Sony Corporation, Tokyo, Japan
Filed Dec. 18, 1975, Ser. No. 642,197
Claims priority, application Japan, Dec. 25, 1974, 50-3855; May 2, 1975, 50-53406
Int. Cl.² H04N *5/76*
U.S. Cl. 358—127 **18 Claims**

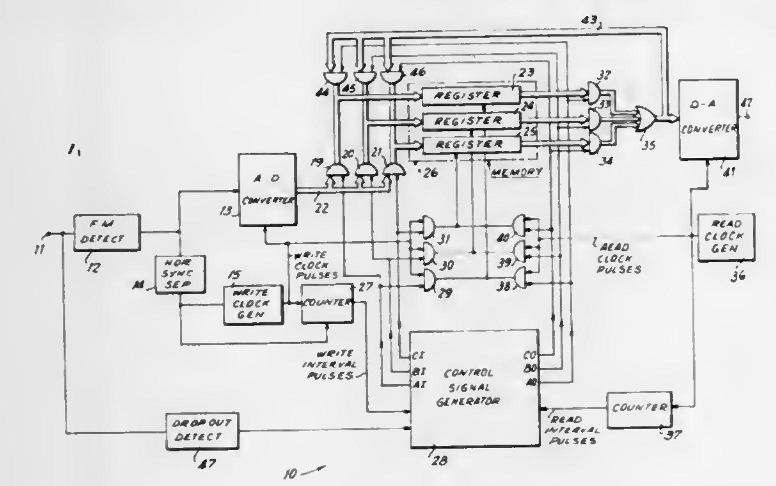

1. A time base corrector for removing time base errors from successive intervals of information signals comprising: memory means including a plurality of registers each having a capacity sufficient to store a predetermined whole number of said intervals of the information signals; write clock generating means coupled to said input means for generating write clock pulses at a variable rate dependent upon time base errors in said information signals; read clock generating means for generating read clock pulses at a rate which is standard at least at the beginning and end of each said interval of the information signals; write selecting means actuated by said write clock pulses for writing each said interval of said information signals into a selected one of said registers; read selecting means actuated by said read clock pulses for reading out the information signals stored in a selected one of said registers; control means for generating write and read control signals applied to said write and read selecting means, respectively, and determining sequences of said registers in which the information signals are respectively written in, and read out from said registers of the memory means, said control means including first and second sequencing means respectively operative to normally produce said write control signals and said read control signals in respective predetermined sequences, first sequence inhibiting means for inhibiting operation of said first sequencing means when one of said read control signals is occurring at the normal completion of a respective one of said write control signals, and second sequence inhibiting means for inhibiting operation of said second sequencing means when one of said write control signals is occurring at the normal completion of a respective one of said read control signals; and recycle means made operative by said read control signals simultaneously with the reading out of information signals from each one of said registers for rewriting in the respective one of said registers the information signals which are being read out therefrom.

4,063,285
PICKUP DEVICE WITH A COMPOSITE COMPLIANCE ARM
Tadashi Nagaoka, Nishinomiya, Japan, assignor to Matsushita Electric Industrial Co., Ltd., Osaka, Japan
Filed May 12, 1975, Ser. No. 576,370
Claims priority, application Japan, May 15, 1974, 49-54753; May 23, 1974, 49-58584; May 24, 1974, 49-59074; May 24, 1974, 49-59076; Mar. 12, 1975, 50-30528; Mar. 12, 1975, 50-34020[U]
Int. Cl.² H04N *5/76;* **G11B** *3/10*
U.S. Cl. 358—128 **11 Claims**

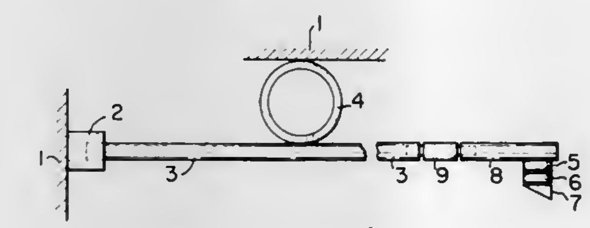

1. A signal reproducing device for use with a uniformly rigid record medium formed with a guide groove having an uneven pattern formed on at least the bottom thereof with projections of the signal segment being located at intervals corresponding to a modulated recorded signal having a predetermined frequency band, said device comprising:

a base,

a pickup member for engaging said record medium, and

a composite compliance arm having at least three arm sections, one of said arm sections being supported at one end by said base and another of said arm sections having said pickup member secured thereto, each of said arm sections having a resonant frequency which is lower than the lowest frequency in said predetermined frequency band, the mechanical impedance of said composite compliance arm being less than the impedance which causes said pickup member to jump out of engagement with said signal recording medium when a predetermined pressure is applied thereto.

4,063,286
VIDEO DISC PLAYER
Ichiro Takahara, Kadoma; Tadahiko Yabu, Hirakata, and Jihei Hujita, Neyagawa, all of Japan, assignors to Sanyo Electric Co., Ltd., Osaka, Japan
Filed Jan. 13, 1976, Ser. No. 648,629
Claims priority, application Japan, Jan. 14, 1975, 50-7126[U]; Jan. 14, 1975, 50-7127[U]; Jan. 17, 1975, 50-8935[U]; Jan. 20, 1975, 50-9819[U]; July 17, 1975, 50-88011
Int. Cl.² G11B *3/62*
U.S. Cl. 358—128 **11 Claims**

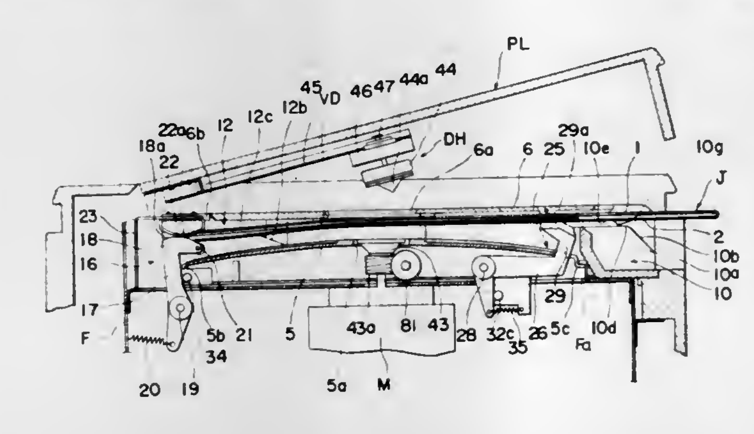

1. A video disc player utilizable with a flexible foil-type information carrier disc, which disc is accommodated in a disc envelope of a type comprising first and second flexible plate members secured together to provide an opening leading to an envelope chamber defined therebetween, at least an outer peripheral portion of said disc being exposed to the outside from said envelope through the opening of said envelope, said video disc player comprising:

means for driving said information carrier disc at its center at a relatively high speed in one direction;

means including a disc holder and a disc mount, said disc mount being coupled to said driving means for rotation together therewith;

means for supporting said disc holder, said supporting means being movable between first and second positions, said disc holder when said support means is in said second position cooperating with said disc mount to firmly hold said disc between said disc mount and said disc holder and being rotatable independently of said supporting means, but rotatable together with said disc mount,, said disc holder when said supporting means is in said first position separating from said disc mount;

a table structure including a disc receiving chamber and a stationary platform within said disc receiving chamber, said stationary platform having a central opening through which said disc mount slightly outwardly projects to allow said disc to hover on a rotation-induced air cushion above said stationary platform during rotation of said disc sandwiched between said disc mount and said disc holder, said table structure having an envelope inlet and a passage means leading from said envelope inlet to said disc receiving chamber and substantially above said platform;

means in said disc receiving chamber operatively positioned in opposition to said envelope inlet and including fixed and movable members for holding said exposed outer peripheral portion of said disc when said exposed outer peripheral portion of said disc accommodated within said evenlope is engaged in between said fixed and movable members upon complete insertion of said envelope with said disc therein into said disc receiving chamber such that, when said envelope is subsequently pulled in a direction opposite to the direction of insertion of said envelope in readiness for removal of the envelope in relation to said disc, said disc is drawn out of said envelope being pulled, said movable member being supported in position for movement between first and second positions and operatively associated with said supporting means whereby, when said supporting means is in said second position, said movable member is brought to its said second position thereby releasing said exposed outer peripheral portion of said disc to permit the latter to fall flat against the stationary platform, said disc holder being subsequently engaged to said disc mount with said disc sandwiched therebetween when said supporting means is moved to said second position; and

said passage means including first means positioned adjacent said holding means and second means positioned adjacent said envelope inlet of said table structure,

said first means being operable to allow said exposed outer peripheral portion of said disc to be substantially engaged in between said fixed and movable members without being disturbed by said disc envelope during loading of the disc in said video disc player, and

said second means being operable to substantially upwardly shift the front end portion of the first plate member of said envelope in relation to said front end portion of the second plate member of said envelope thereby allowing another outer peripheral portion of the disc, which has been accommodated within the disc receiving chamber, to be inserted into the envelope during insertion of the empty envelope into the disc receiving chamber in readiness for removal of the disc from the disc receiving chamber into the envelope.

4,063,287
TRACKING MIRROR DEVICE FOR A VIDEO DISC PLAYER
Gerard Eduard van Rosmalen, Eindhoven, Netherlands, assignor to U.S. Philips Corporation, New York, N.Y.
Filed Feb. 23, 1976, Ser. No. 660,498
Claims priority, application Netherlands, Oct. 15, 1975, 7512084
Int. Cl.² H04N *5/76, 1/24*
U.S. Cl. 358—128 **10 Claims**

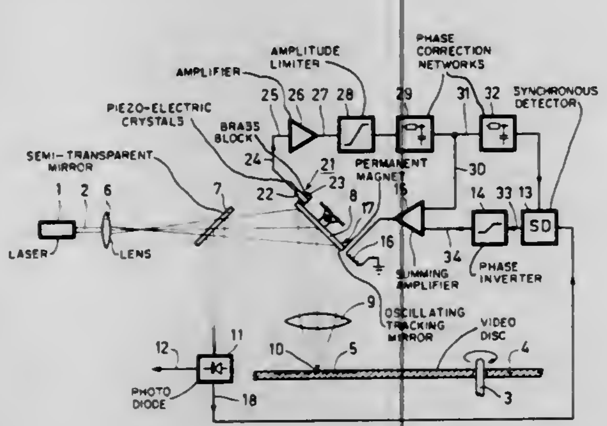

1. A tracking mirror device for a track centering system of a video disc player, said centering system being of the type comprising deflection means including said mirror device for receiving a radiation beam and for reflecting it onto a radially selectable track of a rotating video disc in response to a deflection signal, and deflection signal generating means for sensing the position of the radiation beam with respect to said track and for providing said deflection means with a signal that periodically oscillates the radiation beam about a center position on the track; said tracking mirror device comprising a reflecting surface, electromagnetic drive means for positioning and oscillating the reflective surface at a high frequency in response to the deflection signal from the deflection signal generating means, at least one oscillation compensation element oscillating at the frequency of said mirror surface and in phase opposition therewith, and means for resiliently connecting the mirror surface to the oscillation compensation element.

4,063,288
VERTICAL SYNCHRONIZING CIRCUIT
Robert R. Eckenbrecht, East Bethany, and Paul G. Wolfe, Batavia, both of N.Y., assignors to GTE Sylvania Incorporated, Stamford, Conn.
Filed June 9, 1976, Ser. No. 694,304
Int. Cl.² H04N *5/04*
U.S. Cl. 358—148 **6 Claims**

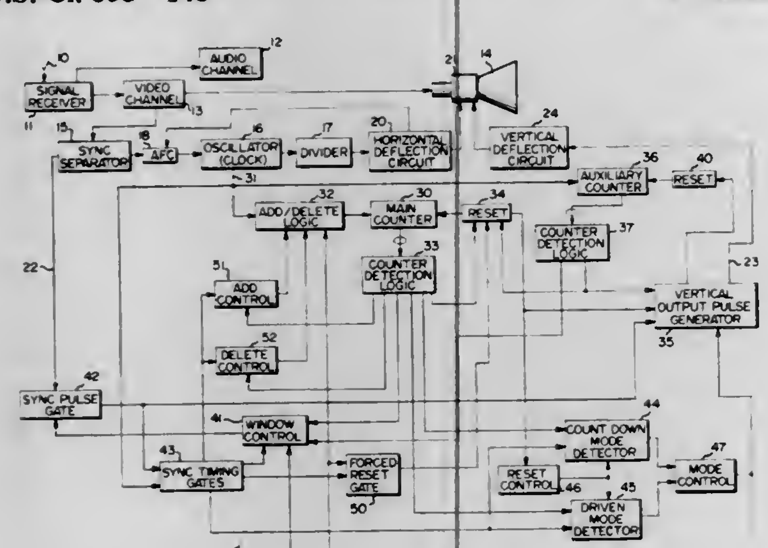

1. A vertical synchronizing circuit for synchronizing vertical output pulses with vertical synchronizing pulses contained in a composite video signal, said circuit including means for providing pulses synchronized with the horizontal synchronizing pulses of said composite video signal, counting means connected to said means for providing pulses for counting the pulses provided thereto, resetting means connected to said counting means for resetting said counting means at a predetermined count, means for providing signals synchronized with the vertical synchronizing pulses of said composite video signal, synchronism detecting means connected to said counting means and to said means for providing signals for detecting when said counting means is reset in synchronism with said vertical synchronizing pulses, means connected to said detecting means and to said resetting means for resetting said counting means in synchronism with said vertical synchronizing pulses when an out-of-synchronism condition is detected, and output means connected to said counting means and to said detecting means for providing said vertical output pulses, the improvement comprising: phase detecting means connected to said counting means and to said means for providing signals for detecting phase errors greater than a predetermined magnitude between the counting of said counting means and said vertical synchronizing pulses, and control means connected to said phase detecting means and to said counting means for advancing or retarding said counting means one count in response to detected phase errors of first and second directions, respectively, which persist for a plurality of vertical fields.

4,063,289
CATHODE RAY TUBE MOUNTING MEANS INCLUDING LIGHTING MEANS AND CAMERA-CONNECTING MEANS
Cornelis Teunis Veenendaal, Cornelius, Oreg., assignor to Tektronix, Inc., Beaverton, Oreg.
Filed Nov. 18, 1976, Ser. No. 743,017
Int. Cl.² H01J *9/00*
U.S. Cl. 358—242 **8 Claims**

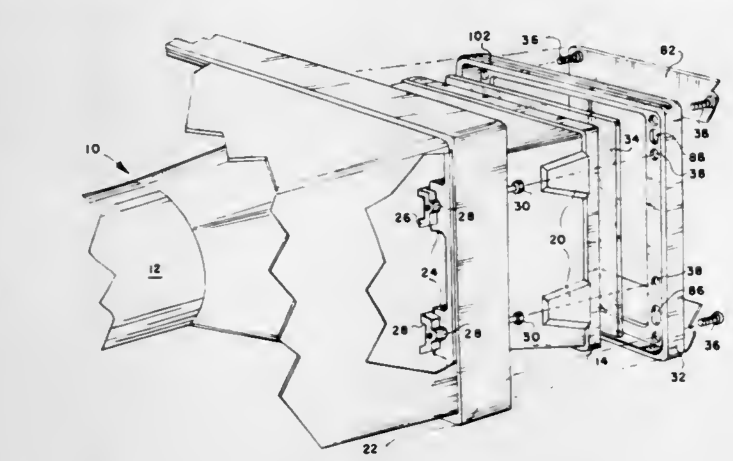

1. A cathode ray tube mounting means for mounting a cathode ray tube having projection means thereon in position in an electronic cabinet, comprising:
- a front casting having an opening therethrough and through which the cathode ray tube is moved;
- guide means provided by said front casting adjacent said opening;
- movable means movably disposed in said guide means for matable engagement with the projection means when the cathode ray tube is moved through said opening;
- bezel means having implosion shield means therein securable onto said front casting; and
- means provided by said movable means and engageable through said bezel means to move said movable means along said guide means thereby moving a faceplate of the cathode ray tube against said implosion shield means.

4,063,290
VIDEO RECORDING APPARATUS
Frederic Howell Metildi, Penfield, and Edward Maurice Granger, Rochester, both of N.Y., assignors to Eastman Kodak Company, Rochester, N.Y.
Filed Mar. 24, 1976, Ser. No. 669,924
Int. Cl.² H04N *5/79, 5/745*
U.S. Cl. 360—9 **3 Claims**

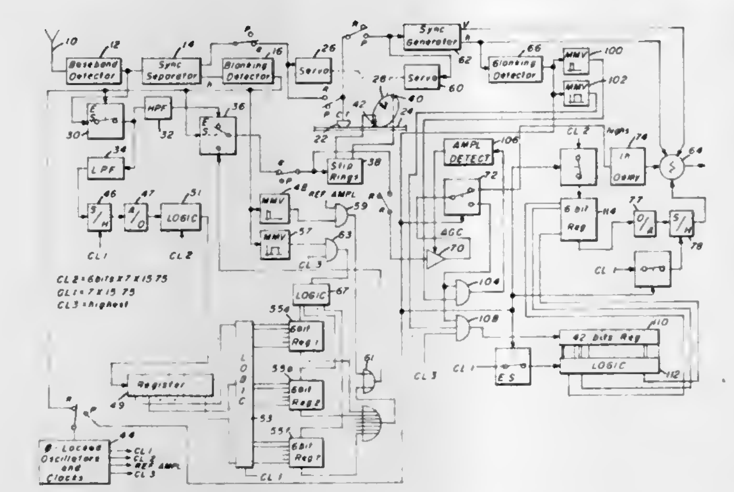

1. Signal processing apparatus for recording a television signal comprising:
- a. means for dividing said signal into high and low frequency bands;
- b. means for sampling said low frequency band at a predetermined rate;
- c. means for quantizing said samples;
- d. means for rearranging the bits which comprise said quantized samples so that bits of like significance are grouped together;
- e. means for providing reference signal information having a quality characteristic of a reference amplitude; and
- f. means for recording on a magnetic medium in sequence said high frequency band, said reference signal information, and low frequency band signal information which corresponds to the rearranged bits, the low frequency band signal information which corresponds to the bits of greatest significance being recorded in proximity to said reference signal information.

4,063,291
APPARATUS AND METHOD FOR ENCODING AND DECODING DIGITAL INFORMATION
Edward W. Gennetten, San Diego, Calif., assignor to The United States of America as represented by the Secretary of the Navy, Washington, D.C.
Filed Oct. 15, 1976, Ser. No. 732,566
Int. Cl.² G11B *5/09*
U.S. Cl. 360—40 **18 Claims**

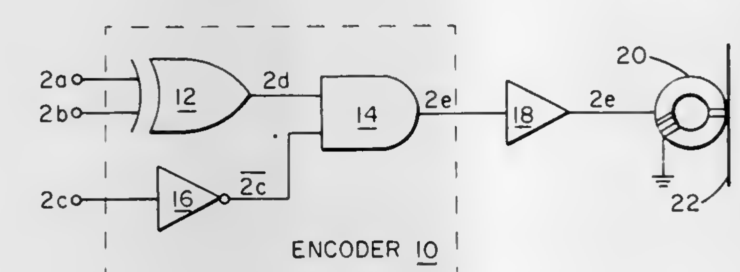

1. An apparatus for encoding and decoding digital information comprising data, clock and partitioning components, said apparatus comprising:

encoding means for receiving said digital information and for encoding said data, clock and partitioning components in an encoded signal comprised of a serial stream of coded bit periods wherein each of said encoded components is inherent in the structure of said encoded signal, wherein said data component comprises discrete sets of sequential data bit periods, wherein each uncoded logic 1 data bit of said sequence is defined in said encoded signal by a transition to a predetermined logic level in one of said coded bit periods and each uncoded logic 0 data bit of said sequence is defined in said encoded signal by a transition of the other logic level in one of said coded bit periods, and wherein said partitioning component of said digital information is defined in said encoded signal by a blank interval occurring during a selected number of adjacent coded bit periods during which blank interval no transitions to a predetermined logic level occur; and

said apparatus further comprising decoding means coupled to said encoding means for receiving said encoded signal and responding thereto by generating a first output comprising said data component, a second output comprising said clock component, and a third output comprising said partitioning component.

4,063,292
INTEGRAL RETAINED FILE PROTECT MEANS
Irving Karsh, Los Angeles, Calif., assignor to Bell & Howell Company, Chicago, Ill.
Filed Aug. 9, 1976, Ser. No. 712,871
Int. Cl.² G11B *15/04*
U.S. Cl. 360—60 **10 Claims**

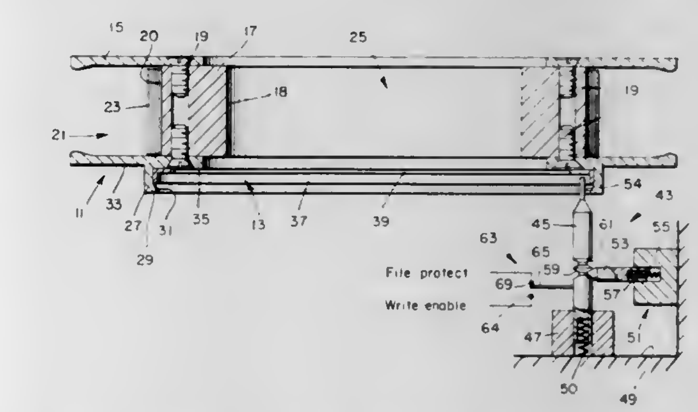

1. A reel adapted to store magnetic tape for use with a magnetic tape recorder/reproducer having record/erase electronics operable to inhibit erasure of information on the tape, the reel having a core, a first flange and a second flange defining a tape cavity for storing the tape, wherein the improvement comprises:
- retaining means having an annular configuration and extending from the first flange onto the side of the first flange opposite the tape cavity;
- lockout means having an annular configuration and being adapted to be removably retained by the retaining means in a first position and in a second position different from the first position;
- a particular annular flange included in the lockout means and having a first relationship with the first flange in the first position and a second relationship with the first flange in a second position; whereby
- the reel with the lockout means in the first position is adapted to operate the erase electronics of the recorder/reproducer to inhibit erasure of the information on the tape.

4,063,293
MAGNETIC HEAD SWITCHING MATRIX WITH BI-DIRECTIONAL CURRENT CAPABILITY
Avraham Perahia, Sharon, Mass., assignor to Sperry Rand Corporation, New York, N.Y.
Filed Apr. 19, 1976, Ser. No. 677,957
Int. Cl.² G11B *15/12*
U.S. Cl. 360—62 **17 Claims**

1. A switching circuit for selectively coupling amplifier means to a plurality of magnetic heads, each said head includ-

ing two serially connected coils with a center tap therebetween, comprising
- first and second data line means coupled to said amplifier means,
- first and second constant current supply means coupled to said first and second data line means respectively for inducing substantially equal constant currents therein,
- first and second diode means associated with each said head coupling said two coils thereof to said first and second data line means respectively,
- reference voltage source means,
- third diode means associated with each said head coupling said center tap thereof to said reference voltage source means,

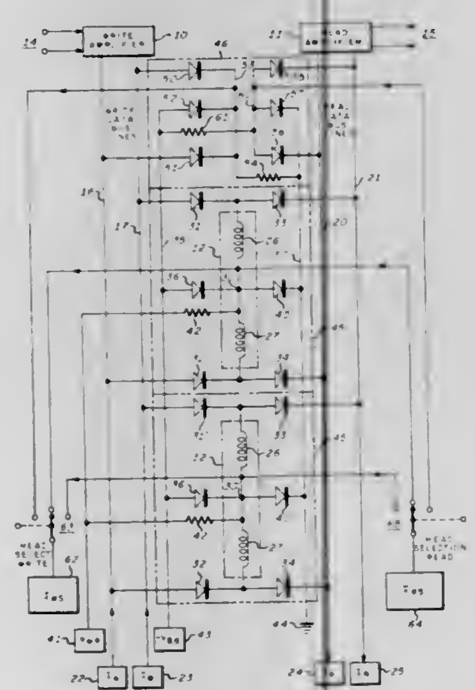

- control voltage source means coupled to said center tap of each said head,
- head selection current supply means for providing a head selection current to select a head, and
- head selection means for selectively coupling said head selection current to the center tap of said selected head whereby said substantially equal constant currents flow through said first and second diode means associated with said selected head,
- said reference voltage source means and said control voltage source means providing voltages for reverse biasing said diode means associated with the non-selected heads.

4,063,294
TAPE CARTRIDGE LOADING MECHANISM
Ernest C. Burkhart, Bellingham, Wash., assignor to Northwestern Technology, Inc., Bellingham, Wash.
Filed Aug. 22, 1975, Ser. No. 606,941
Int. Cl.² G11B *15/68, 23/04*
U.S. Cl. 360—92 9 Claims

1. A tape cartridge loading mechanism for moving one of a plurality of tape cartridges to a playback station for engagement by a tape actuating drive and playback head, comprising:
- a tape cartridge conveyor for carrying a plurality of tape cartridges to a loading station, said conveyor having means for holding a plurality of cartridges each with an end exposed at the loading station,
- carriage means positionable at said loading station for moving a cartridge out of said cartridge holding means and into said playback station, said carriage means including a set of opposed grasping rollers moveable toward one another into engagement with opposite sides of the exposed end of said cartridge for grasping the cartridge, actuating means for advancing said rollers along a path toward said playback station, and means for moving the rollers into engagement with the cartridge at the loading station and out of the engagement from the cartridge at

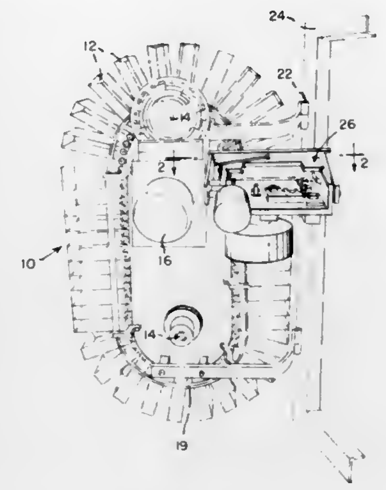

the playback station for releasing the cartridge to the tape actuating drive.

4,063,295
FLEXIBLE MAGNETIC DISC RECORDING TECHNIQUE
Don Cowan Mann, and George T. Spencer, both of Richardson, Tex., assignors to Texas Instruments Incorporated, Dallas, Tex.
Filed Jan. 7, 1976, Ser. No. 647,021
Int. Cl.² G11B *23/02, 5/016, 5/82*
U.S. Cl. 360—99 19 Claims

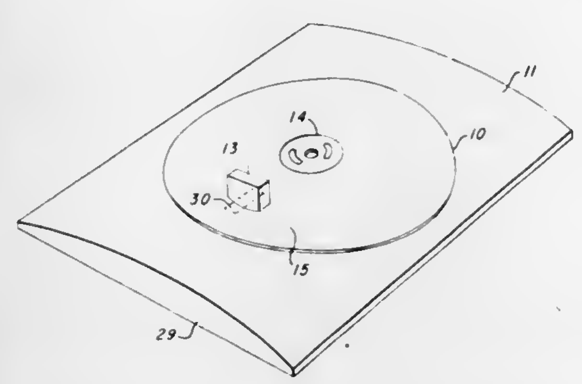

1. An apparatus for recording and/or reading information on the upper major surface of flexible information storage media having upper and lower opposite major surfaces comprising:
- a. a stationary rigid body having a cylindrical smoothing plane surface with an opening formed on said surface at a predetermined position;
- b. rotational means associated with said cylindrical surface for rotating said information storage media over said cylindrical surface with the lower major surface of said information storage media facing said cylindrical surface wherein rotation of said information storage media causes said media to conform to the curvature of said cylindrical surface with an air bearing therebetween; and
- c. a recording and/or reading head mounted in a predetermined position opposite to the opening in the cylindrical surface of said body for recording and/or reading information on the upper major surface of said information storage media when said media is in rotation, said head applying a preselected amount of pressure on the upper major surface of said flexible media in opposing relation to said air bearing causing said media to protrude into said opening..

4,063,296
METHOD AND MEANS FOR ERASING RECORDINGS ON MAGNETIC PAPER, PARTICULARLY FOR DISTANCE MEASURING EQUIPMENT
Sverre Oddmund Fremstedal, and Otto Bjorn Lier, both of Horten, Norway, assignors to Simrad A.S., Horten, Norway
Filed July 8, 1975, Ser. No. 593,924
Claims priority, application Norway, July 8, 1974, 742474; July 8, 1974, 742475; July 8, 1974, 742476
Int. Cl.² G11B *5/47, 5/48, 5/02*
U.S. Cl. 360—118 12 Claims

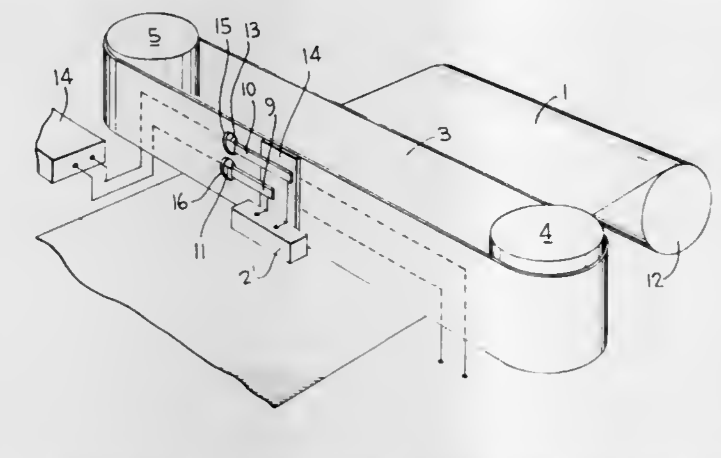

1. Apparatus for pre-aligning a recording medium responsive to a magnetic field, said recording medium being of the type containing magnetically orientable particles rendering said recording medium reflective to light with said particles oriented parallel to the surface of said recording medium, comprising:
- at least one magnet mounted on a movable support such that the component of the magnetic field parallel to the surface of said recording medium is larger than the component of the magnetic field normal to said surface and generated by said at least one magnet in a region of said surface where said magnetic field is marginally strong enough for orienting said particles; and
- means for establishing relative motion between said support and said recording medium along the dimensions of said medium and parallel to the surface of the medium, whereby the surface of said recording medium passes through the marginal magnetic field to orient said magnetically orientable particles parallel to the surface of the medium.

4,063,297
ELECTRIC ARC INTERRUPTER AND CIRCUIT BREAKER
Keats A. Pullen, Jr., Kingsville, Md., assignor to The United States of America as represented by the Secretary of the Army, Washington, D.C.
Filed Nov. 9, 1976, Ser. No. 740,332
Int. Cl.² H02H *7/22*
U.S. Cl. 361—14 8 Claims

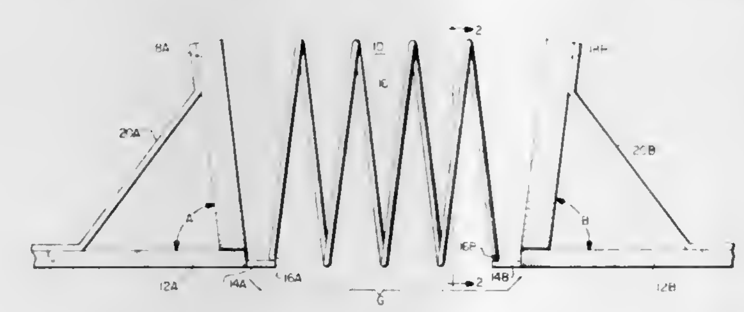

1. Means for interrupting powerful surge currents and ensuing arcs comprising:
- input and output conductor means defining a gap therebetween;
- fusible extension links in said gap mounted one on said input conductor means and one on said output conductor means in electrical connection therewith;
- a conductive spring helix axially tensioned and integrally affixed between said first and second fusible links in said gap;
- and first and second conductive eddy-current rings facing one another and mounted on said input and output conductors, respectively, immediately adjacent said fusible links.

4,063,298
INSULATED LIGHTNING ARRESTER SUPPORT WITH REMOTE GROUNDING CONTROL
Lawrence A. Tornetta, 607 E. Germantown Pike, Norristown, Pa. 19401; Harry J. Hettel, 135 Leslie Lane, West Chester, Pa. 19380; Earle Hamilton, 1423 Breton Hills Drive, Hartsville, Pa. 18974, and David R. Earl, 1541 Dean Drive, Lansdale, Pa. 19446
Filed Sept. 29, 1976, Ser. No. 727,392
Int. Cl.² H02H *7/04*
U.S. Cl. 361—40 5 Claims

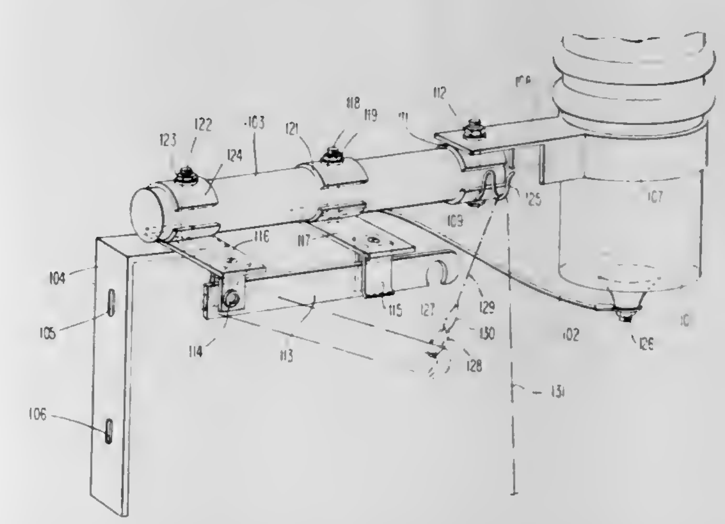

1. In association with a distribution transformer having a grounded metallic casing and a high voltage terminal, and a lightning arrester having a ground connection and high voltage terminal connected to the high voltage terminal of said transformer, safety apparatus comprising:
- an insulating support member extending from said transformer casing, said arrester being mounted on said support member in insulating spaced relation to said transformer casing; and
- remotely actuated means for making electrical connection between said transformer casing and said ground connection of said arrester.

4,063,299
MAGNETICALLY LATCHED GROUND FAULT CIRCUIT INTERRUPTER
Ronald G. Munroe, Dolgeville, N.Y., assignor to Eagle Electric Mfg. Co. Inc., Long Island City, N.Y.
Filed Oct. 24, 1975, Ser. No. 625,645
Int. Cl.² H02H *3/28*
U.S. Cl. 361—45 16 Claims

1. A GFI protected circuit comprising:
- A. an AC line input including a live lead and a neutral lead,
- B. a branch circuit including a live lead and a neutral lead,
- C. a circuit interrupter between the line input and the branch circuit,
- D. a sensor which, responsive to a fault of at least a predetermined magnitude, will generate an electric signal,
- E. a rectifier energized from a live lead and a neutral lead and having a DC output,
- F. an amplifier powered by the rectifier and having an output, the electric signal being fed to the amplifier,
- G. a normally open switch having a control terminal con-

nected to the amplifier output, the switch closing upon application to the control terminal of an amplifier output corresponding to a fault of at least said predetermined magnitude and thereupon supplying a DC current of a predetermined polarity,

H. said circuit interrupter including a remanent magnetic latching means and means biasing the interrupter closed,

I. said latching means being actuated by flow of current therethrough upon closure of the switch, said latching means remaining closed by remanent magnetization upon opening of the circuit interrupter and consequent deactuation of the latching means and opening of the switch,

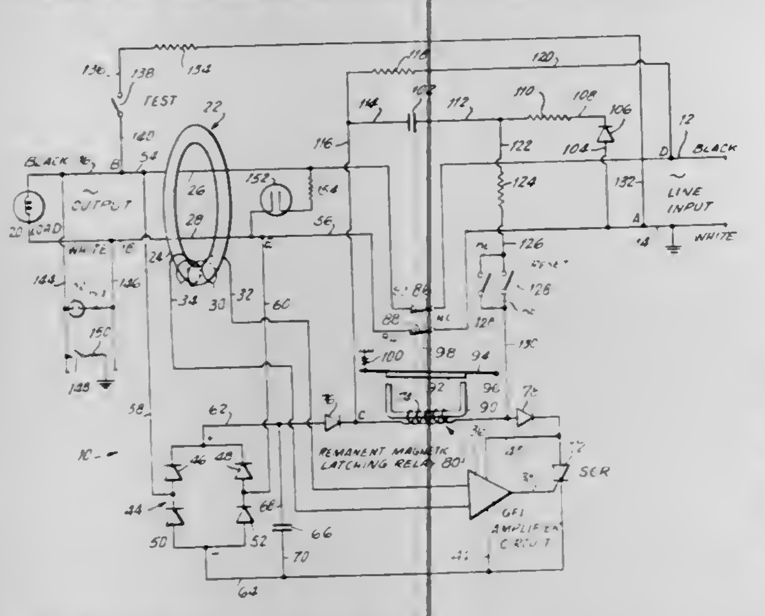

J. an electric energy storing means,

K. means to charge said electric energy storing means in a predetermined sense,

L. releasing means to reduce the remanent magnetization of the latching means and, when actuated, to disable the latching means and permit the biasing means to close the circuit interrupter, and

M. a normally open reset switch that, upon closure, discharges the energy storing means to the releasing means in a sense to reduce the remanent magnetization of the latching means.

4,063,300

PROTECTIVE RELAY ARRANGEMENTS

Eric Paddison, Stafford; Leonardo Perez-Cavero, Haughton, both of England, and Christopher George Wilson, Melbourne, Australia, assignors to The General Electric Company Limited, London, England

Filed Nov. 17, 1975, Ser. No. 632,404

Claims priority, application United Kingdom, Nov. 18, 1974, 49733/74

Int. Cl.² H02H *3/26*

U.S. Cl. 361—78 **18 Claims**

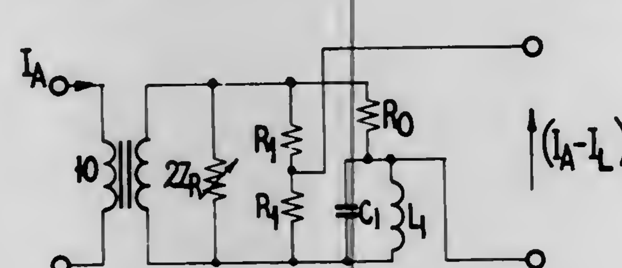

1. A protective relay arrangement for an A.C. power system comprising: circuit means for deriving at least one pair of signals which, when a fault occurs in the system, are functions of quantities which would have occurred in the system at the relaying point under fault conditions if the or each emf source in the system had a value equal to the pre-fault voltage at the point in the system where the fault has occurred; and comparator means for comparing said signals.

4,063,301

HALF-WAVE DETECTOR FOR ALTERNATING CURRENT STATIC SWITCHES

Ronald William Lye, Peterborough, Canada, assignor to General Electric Company, Philadelphia, Pa.

Filed Aug. 9, 1976, Ser. No. 712,990

Claims priority, application Canada, Aug. 25, 1975, 234324

Int. Cl.² H02H *3/26*

U.S. Cl. 361—88 **10 Claims**

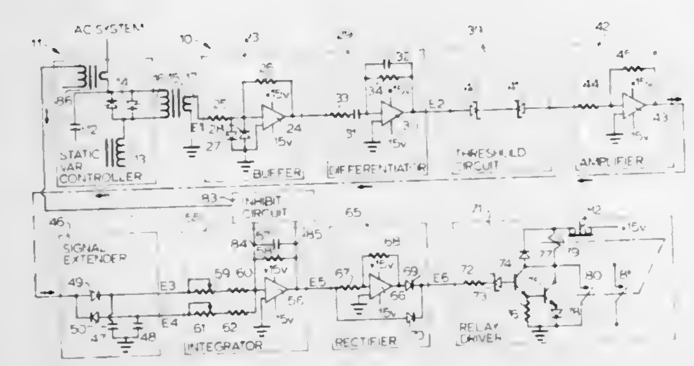

1. A circuit for monitoring conduction of a phase controlled, alternating current switching device comprising means for detecting the voltage across said switching device; a differentiator for differentiating said voltage to obtain a train of positive and negative voltage pulses of short time duration and other voltages of lesser peak values, each rapid change of said voltage in one direction producing a pulse of one polarity and each rapid change in the other direction producing a pulse of the other polarity; a threshold circuit for passing voltage pulses in excess of said lesser peak values; an amplifier for amplifying the voltage pulses passed by said threshold circuit; an extender circuit for lengthening the time duration of said amplified pulses; an integrator for integrating said time lengthened pulses and putting out alternate positive and negative voltages averaging zero in value during normal operation of said switching device and during abnormal operation when the switching device conducts half-waves of one polarity only putting out an incrasing voltage of one polarity only; and means responsive to a predetermined value of said increasing voltage for initiating a control function.

4,063,302

PROTECTION ARRANGEMENT FOR AN INVERTER

Gerhard Donig, Erlangen, and Manfred Müller, Nurnberg, both of Germany, assignors to Siemens Aktiengesellschaft, Berlin and Munich, Germany

Filed Mar. 22, 1976, Ser. No. 668,927

Claims priority, application Germany, Mar. 25, 1975, 2513227

Int. Cl.² H02H *7/122*

U.S. Cl. 361—90 **7 Claims**

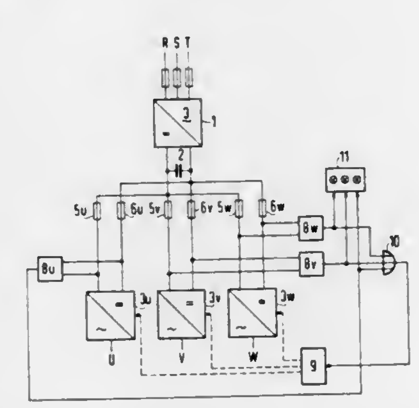

1. A protection arrangement for use in protecting the valves in the valve branches of an inverter, the inverter being of a type having first and second fuses connected in series with its respective first and second d-c inputs, which inputs are adapted to receive a d-c input voltage, and of a type having a control unit for delivering firing pulses to said valve branches, said protection arrangement comprising:

an electronic voltage monitoring device for monitoring said d-c input voltage by monitoring the voltage across two points each situated between one of said fuses and the d-c input to which said one fuse is connected, said device including means for delivering a protection signal to said control unit for causing said control unit to release firing pulses to said valve branches when said monitored voltage drops below a predetermined value.

4,063,303

STOP-MOTION APPARATUS OF WEAVING LOOMS

Miyuki Gotoh, No. 4-48-21, Midori-cho, Tokorozawa, Japan

Filed Apr. 20, 1976, Ser. No. 678,668

Claims priority, application Japan, May 20, 1975, 50-59221

Int. Cl.² H01H *47/02*

U.S. Cl. 361—170 **7 Claims**

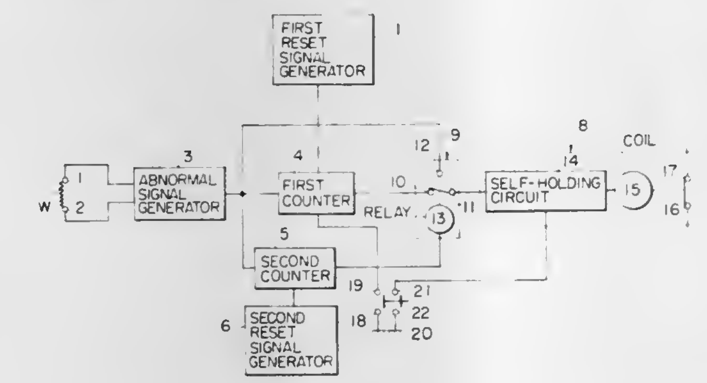

1. In stop-motion apparatus of a weaving loom of the type wherein the output from an abnormal signal generator is applied to a counting circuit, said generator generating the abnormal signal when it detects an improper insertion of a weft yarn, said counting circuit is reset by a reset pulse generated by a reset circuit when the weaving operation of a unit length is completed, said counting circuit produces an output when the number of the abnormal signals applied to the counting circuit exceeds a predetermined limit while said unit length is being woven, and said output is utilized to open the circuit of the driving means of said weaving loom, the improvement which comprises a second counting circuit connected in parallel with said first mentioned counting circuit, means to apply the output from said abnormal signal generator to said second counting circuit, a second reset circuit which generates a second pulse each time a reference length of the fabric equal to a multiple of said unit length is woven, means to apply said second pulse to said second counting circuit for periodically resetting the same, means for causing said second counting circuit to produce an output when the number of the abnormal signals applied to said second counting circuit from said abnormal signal generator exceeds a second predetermined number during an interval between said second pulses, and means responsive to the output from said second counting circuit for opening said circuit of the loom driving means.

4,063,304

METHOD OF CONTROLLING THE ROTATION OF A ROTARY BODY AND APPARATUS THEREOF

Junshiro Ogura, No. 25-6, Kita 4-chome, and Toshio Niimi, No. 1-1, Kita 5-chome, both of Omori Ota, Tokyo, Japan

Filed Feb. 20, 1976, Ser. No. 660,026

Claims priority, application Japan, Feb. 26, 1975, 50-22792; Mar. 13, 1975, 50-30482; Mar. 27, 1975, 50-37301

Int. Cl.² G05D *13/62*

U.S. Cl. 361—242 **6 Claims**

1. A method of controlling the speed of a rotary body rotatable by a mechanical drive, the speed of which is effected to maintain a present number of revolutions by a variable second electric signal which can coincide with a first electric signal corresponding to the present number of revolutions,

said method comprising the steps of:

making a comparison of the first signal with a third signal generated from the rotary body, in proportion to the revolution speed of the rotary body, when the number of revolutions of the rotary body deviates from the number of revolutions corresponding to the second signal,

sweeping the second signal in accordance with the output

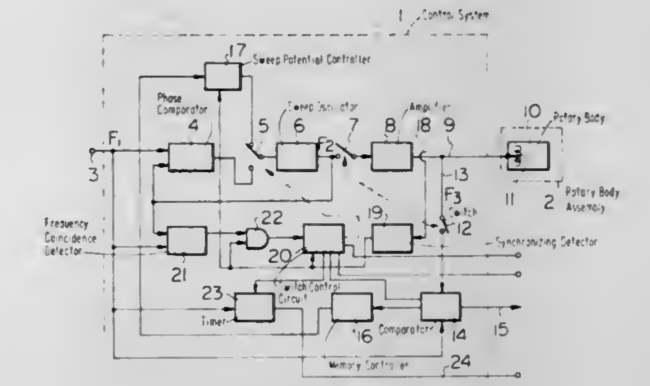

voltage of said comparison toward the third signal until coincidence therewith, when deviation based on said comparison lies within a tolerance,

detecting the coincidence of the second signal with the third signal,

sweeping the second signal in accordance with the output voltage of said detection toward the first signal until coincidence therewith, and

maintaining coincidence of the second signal with the first signal.

4,063,305

SWITCHBOARD DRAWOUT APPARATUS INCORPORATING JOINT CLAMPING MECHANISM

Eric Axel Ericson, Plainville, and Frederick Daniel Kaufhold, Forestville, both of Conn., assignors to General Electric Company, New York, N.Y.

Filed June 21, 1976, Ser. No. 698,279

Int. Cl.² H02B *1/04*

U.S. Cl. 361—339 **24 Claims**

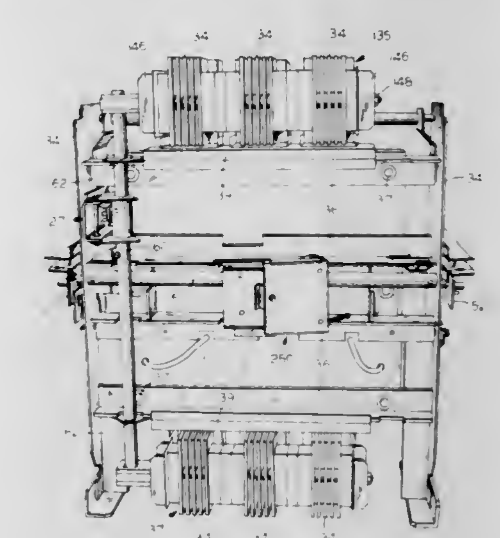

1. An electrical switchboard comprising, in combination:

A. an electrical device having plural current carrying terminals;

B. a first electrical connector affixed in electrical connection to each said device terminal, each said first connector comprising plural contact elements disposed in parallel spaced relation;

C. a second electrical connector associated with each said first electrical connector, said second electrical connectors mounted by and electrically connected to the switch-

board, and each said second electrical connector having at least one contact element;

D. a carriage mounting said device with said first connector contact elements extending rearwardly of said carriage;

E. means mounted by the switchboard and supporting said carriage for movement into and away from an engaged position wherein said contact elements of associated first and second electrical connectors are in lapped relation;

F. a racking mechanism having manual operating means accessible at the front of said carriage for mechanically assisting movement of said device into and away from said engaged position; and

G. a joint clamping mechanism having a manually operable lead screw extending forwardly from said first connectors to a headed termination located at the front of said carriage, said clamping mechanism operable by rotation of said lead screw, while said device is in said engaged position, to exert predetermined clamping pressures on said plural first electrical connectors along a force line normal to the axis of said lead screw, thereby to achieve intimate electrical contacting engagement between said lapped contact elements of associated ones of said first and second connectors.

4,063,306

ACTIVELY SWITCHED DAMPING CIRCUIT

Donald W. Perkins, DeWitt, N.Y., and Marvin W. Smith, Roanoke, Va., assignors to General Electric Company, Syracuse, N.Y.

Filed Sept. 24, 1976, Ser. No. 726,168

Int. Cl.² H02M *1/18*

U.S. Cl. 363—17 **1 Claim**

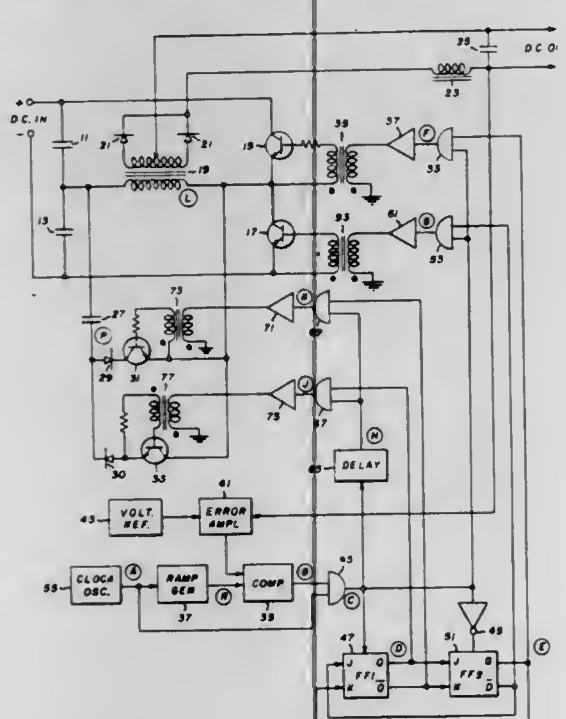

1. In combination with an inverter type power supply including a bridge circuit across which is connected the primary winding of a load transformer for periodically reversed current flow therethrough under control of current switching means interposed in at least two legs of the bridge and operated in alternating sequence by first switch drive means; an active damping network for limiting voltage transients in the inverter comprising:

a. an energy absorbing element;

b. a pair of switchable oppositely unidirectionally conducting means connected in parallel relation with each other and connected both in series relation with said energy absorbing element to form a circuit;

c. means connecting said damping circuit in parallel relation with said transformer primary winding; and

d. second switch drive means synchronized with said first switch drive means for switching said oppositely unidirectionally conducting means in alternating sequence such that the unidirectionally conducting means of proper polarity to permit continuing flow of current in the transformer primary winding is switched closed just prior to the opening of the one said current switching means through which such flow was established.

4,063,307

DIRECT CURRENT POWER CONVERTER WITH START-UP AND PROTECTION CIRCUITS

Dennis L. Stephens, Niles, Ill., assignor to Teletype Corporation, Skokie, Ill.

Filed June 28, 1976, Ser. No. 700,376

Int. Cl.² H02P *13/22*

U.S. Cl. 363—21 **11 Claims**

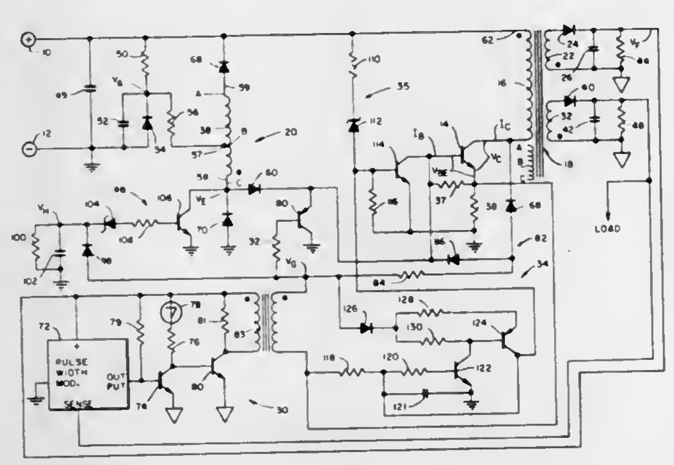

1. An apparatus for converting a direct current input voltage level to a preselected direct current output level including a start circuit for initiating operation of the apparatus upon the application of the direct current input comprising:

a choke having a primary inductance, a start inductance and at least one secondary inductance, said primary, start and secondary inductances being magnetically coupled,

a first switching means having a control terminal for intermittently switching the direct current input through said primary inductance,

said start circuit including means for passing at least a portion of said direct current input to the control terminal of said first switching means, and means for passing at least a portion of the voltage across said start inductance to said control terminal of said switching means so that the rate of voltage change across said primary inductance created by the switching of current therethrough by said first switching means is reflected across said start inductance and to the control terminal of said switching means thereby causing said switching means to intermittently interrupt the input current through said primary inductance;

means for rectifying the varying voltage induced across said secondary inductance by the current passing through said primary inductance to provide said selected direct current output level;

a pulse generator responsive to the voltage across said secondary inductance and serving to provide a pulsed signal to the control terminal of said switching means in response to a predetermined level of said rectified secondary voltage; and

means for disabling said start circuit in response to the output of said pulse generator so that said start circuit controls said switching means upon the initial application of said direct current input and said pulse generator serves to control subsequent operation of said switching means.

4,063,308

AUTOMATIC CLOCK TUNING AND MEASURING SYSTEM FOR LSI COMPUTERS

Clive A. Collins, Wappingers Falls, and Vincent F. Sollitto, Rhinecliff, both of N.Y., assignors to International Business Machines Corporation, Armonk, N.Y.

Filed June 27, 1975, Ser. No. 591,194

Int. Cl.² G06F *1/04*

U.S. Cl. 364—200 **13 Claims**

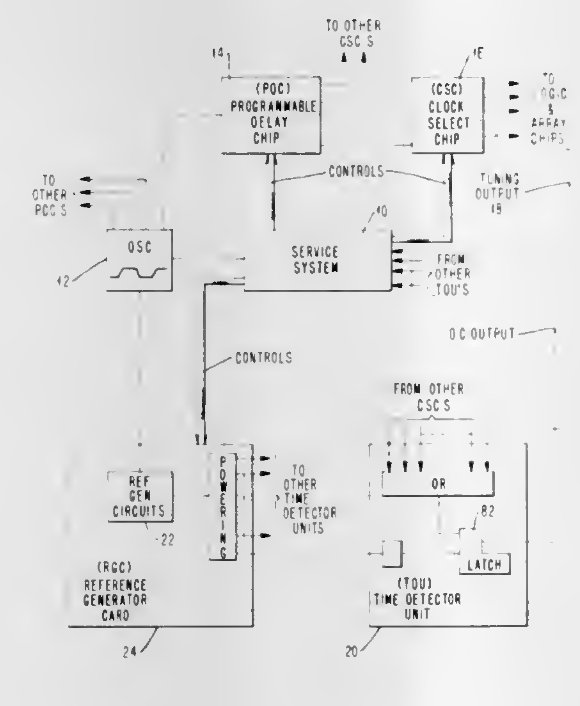

1. An automatic clock tuning system including computing means of the type having a preloaded data memory providing control data to said tuning system for use in a data processing system of the type in which sequential fixed frequency clock pulses from a clock pulse source are utilized to time logic circuit operations comprising:

a delay means for providing fixed frequency clock pulses in the data processing system with the delay determined by said control data from the data memory;

a clock distribution means for distributing the delayed clock pulses received from said delay means in accordance with the clock path selection information contained in the control data obtained from the data memory;

a reference generator connected to said source of fixed frequency clock pulses for introducing predetermined increments of delay to successive clock pulses and for selecting under control of said control data from said memory the one of said clock pulses having a delay substantially equivalent to the predetermined timing associated with the path to which said clock distribution means is set;

an automatic time detecting means connected to said reference generator and to said clock distribution means for providing an output indicative of a comparison or noncomparison of the time of occurrence between one of the delayed clock pulses from said clock distribution means and said selected reference delayed clock pulse from said reference generator, the non-comparison condition output effecting an adjustment of the delay of said delay means through said computing means, said time detection repeating until a comparison of one of the delayed clock pulses and said reference delayed clock pulse is obtained thereby indicating that the clock pulses have the predetermined timing for the selected distribution path.

4,063,309

MEAN CORPUSCULAR VOLUME MEASURING APPARATUS AND METHOD

James William Hennessy, Trumbull, and Bruce Munson Turner, Brandford, both of Conn., assignors to Hycel, Inc., Houston, Tex.

Filed Sept. 16, 1976, Ser. No. 723,805

Int. Cl.² G06F *15/36;* G06M *11/04*

U.S. Cl. 364—555 **13 Claims**

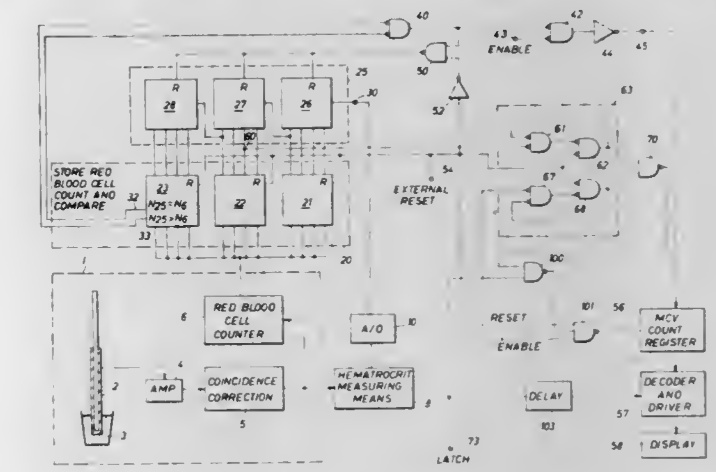

1. Apparatus for producing a signal indicative of mean corpuscular volume of blood cells in a sample comprising: input means for supplying an input indicative of corrected red blood cell count for the sample; register means connected to said input means for storing an indication of said corrected red blood cell count; counter means; clock source means providing a pulse train having a length indicative of a hematocrit measurement made of said sample; means connecting said clock source means to a clock terminal of said counter means; interconnection means interconnecting said counter means and said register means for providing one output pulse for a preselected number of clock pulses, the preselected number being determined by the indications stored in said register means, whereby the number of output pulses is indicative of mean corpuscular volume for the sample.

4,063,310

SAMPLER CONTROL SYSTEM FOR CHROMATOGRAPH ANALYTICAL APPARATUS

John Marshall McDonald, Cambridge, England, assignor to Pye Limited, England

Continuation-in-part of Ser. No. 489,832, July 18, 1974, abandoned. This application June 23, 1976, Ser. No. 699,073

Claims priority, application United Kingdom, July 25, 1973, 35368/73

Int. Cl.² G06F *7/28, 15/06, 15/46*

U.S. Cl. 364—900 **4 Claims**

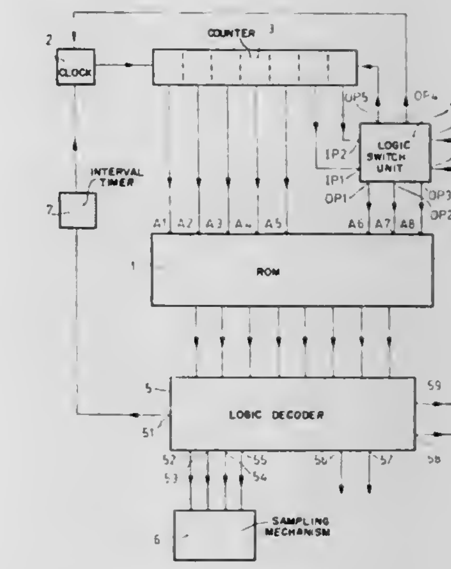

1. A control system for analytical apparatus comprising:

a read-only memory containing a plurality of sets of words,

each set of words defining a sequence of operations of said apparatus;

first and second groups of read only memory inputs;

means for selecting a plurality of said sets of words one at a time in a selectable order to produce a composite sequence of operations of said apparatus comprising program selection means having a plurality of outputs connected to said first group of memory inputs; the program selection means comprising a logic switch unit settable to a plurality of states to produce a selected sequence of condition signals on said outputs of said program selection means;

means for selecting one of said words within a selected one of said sets comprising a counter having a plurality of outputs connected to said second group of memory inputs; and

means for cycling said counter, the consequent variation in the states of the counter outputs being effective to read out sequentially the words in the selected one of said sets of words during one cycle of said counter, said condition signals at each step of said sequence being present for one cycle of said counter.

4,063,311

ASYNCHRONOUSLY OPERATING SIGNAL DIAGNOSTIC SYSTEM FOR A PROGRAMMABLE MACHINE FUNCTION CONTROLLER

Edward Scott Jeremiah, Cincinnati; Kenneth Erwin Schubeler, West Chester, and Eric Randall Kline, Cincinnati, all of Ohio, assignors to Cincinnati Milacron Inc., Cincinnati, Ohio

Filed Aug. 17, 1976, Ser. No. 715,133

Int. Cl.^{2} G05B *11/00;* **G06F** *9/00, 11/00*

U.S. Cl. 364—900 **14 Claims**

1. A programmable machine function controller of the type comprised in part of a memory having a first section containing a machine control program representing at least one cycle of operation associated with a machine, said cycle of operation being comprised of a number of cycle steps and each cycle step being defined by a number of cycle input signals, said machine control program defining the states of output signals being generated to a contact bus in electrical communication with the machine in response to predetermined states of the input signals, and said controller further comprising means for continuously and iteratively reading the memory and a logic circuit responsive to the memory for controlling the states of the output signals as a function of the actual input signal states corresponding to the input signal states defined by the program, wherein the improvement comprises:

a. a second section of said memory for storing a first diagnostic program defining a test of error states of selected cycle input signals associated with the particular cycle steps defining the machine cycles of operation, said diagnostic program being stored in the memory for controlling the testing of the states of the selected cycle input signals;

b. means operating asynchronously with the controller for generating a first input signal to initiate a test of one of the machine cycles of operation;

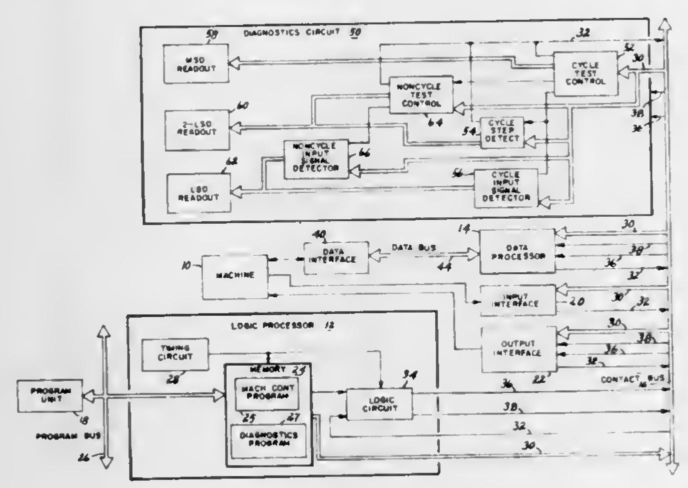

c. means responsive to the controller and the generating means for detecting a first output signal representing a particular cycle step in the one of the machine cycles of operation;

d. means responsive to the controller and the generating means for detecting a second output signal representing an error state of one of the selected cycle input signals as defined by the first diagnostic program; and

e. means having inputs responsive to the first input signal and the first and second output signals for displaying a representation of the inputs.

DESIGN PATENTS

GRANTED DECEMBER 13, 1977

ERRATA

For CLASS	See PATENT NO.
007-024	246,619
010-013	246,647
014-044	246,670

DESIGNS

DECEMBER 13, 1977

246,616
JACKET
Verissimo M. Montes, 304 E. 7th St., Los Angeles, Calif. 90014
Filed Apr. 9, 1976, Ser. No. 675,312
Term of patent 14 years
Int. Cl. D2—*02*
U.S. Cl. D2—206

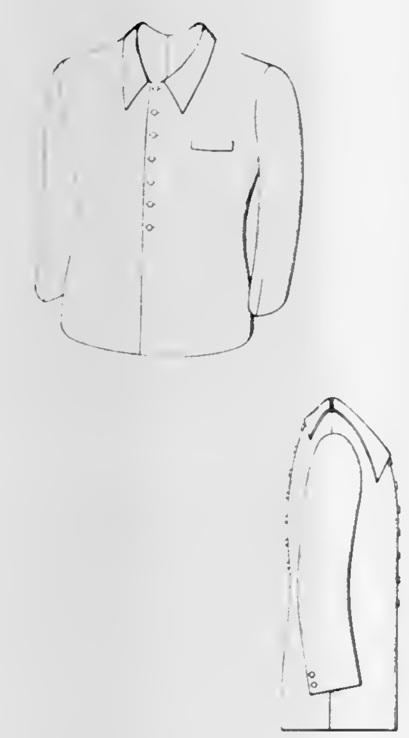

246,617
HAT BAND
Chester C. Tomlin, Jr., 3104 Harrison Ave., Orlando, Fla. 32802
Filed Mar. 17, 1976, Ser. No. 667,604
Term of patent 14 years
Int. Cl. D2—*03*
U.S. Cl. D2—250

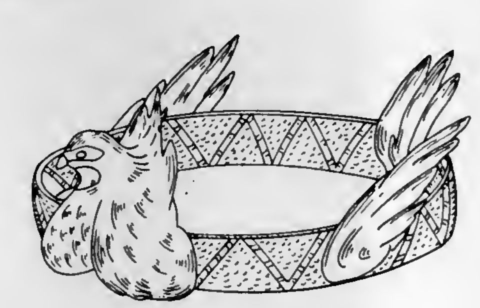

246,618
COMBINED CABINET AND SPEAKER HOUSING
Robert H. Johnson, 701 Laurie Drive, Winthrop Harbor, Ill. 60096
Filed Apr. 26, 1976, Ser. No. 680,365
Term of patent 7 years
Int. Cl. D6—*05*
U.S. Cl. D6—4

246,619
PLATE OR SIMILAR ARTICLE
Seiichi Makita, Nagoya, Japan, assignor to Noritake Co., Limited (Nippon Toki Kabushiki Kaisha), Nagoya, Japan
Filed Dec. 31, 1975, Ser. No. 645,779
Term of patent 14 years
Int. Cl. D7—*01*
U.S. Cl. D7—24

246,620
CHAIR
Jan Dranger, and Johan Huldt, both of Stockholm, Sweden, assignors to Innovator Design AB, Stockholm, Sweden
Filed June 14, 1976, Ser. No. 695,549
Claims priority, application Sweden, Dec. 16, 1975, 2504/75
Term of patent 14 years
Int. Cl. D6—*01*
U.S. Cl. D6—47

246,621
ROCKING CHAIR
Robert Francis Voorhees, Jr., 1708 Oak Glen Road, Toms River, N.J. 08753
Filed July 22, 1976, Ser. No. 707,887
Term of patent 14 years
Int. Cl. D6—*01*
U.S. Cl. D6—49

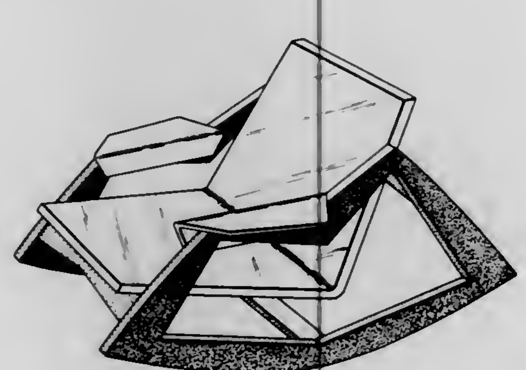

246,622
SOFA
Jan Dranger, and Johan Huldt, both of Stockholm, Sweden, assignors to Innovator Design AB, Stockholm, Sweden
Filed June 14, 1976, Ser. No. 695,546
Claims priority, application Sweden, Dec. 16, 1975, 2506/75
Term of patent 14 years
Int. Cl. D6—*01*
U.S. Cl. D6—63

246,623
DISPLAY STAND FOR SHOCK ABSORBERS, TIRES OR THE LIKE
Bert T. Robins, 2364 Cheyenne Blvd., Toledo, Ohio 43614
Filed May 27, 1976, Ser. No. 690,540
Term of patent 14 years
Int. Cl. D20—*02*
U.S. Cl. D6—85

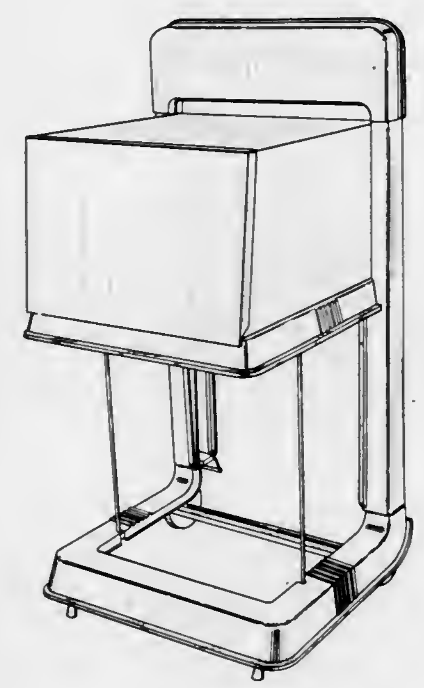

246,624
PAIR OF BOOK ENDS
Yoshimitsu Kawade, Nagoya, Japan, assignor to Ben's Incorporated, Chicago, Ill.
Filed Oct. 12, 1976, Ser. No. 731,770
Claims priority, application Japan, July 7, 1976, 51-25906; July 7, 1976, 51-25907
Term of patent 14 years
Int. Cl. D6—*06*
U.S. Cl. D6—108

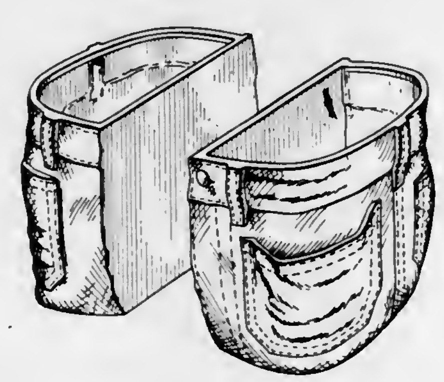

246,625
CORNER BUMPER
Frederick R. Becker, III, Dallas, Pa., assignor to Metropolitan Wire Corporation, Wilkes-Barre, Pa.
Filed May 21, 1976, Ser. No. 688,731
Term of patent 14 years
Int. Cl. D6—*01*
U.S. Cl. D6—191

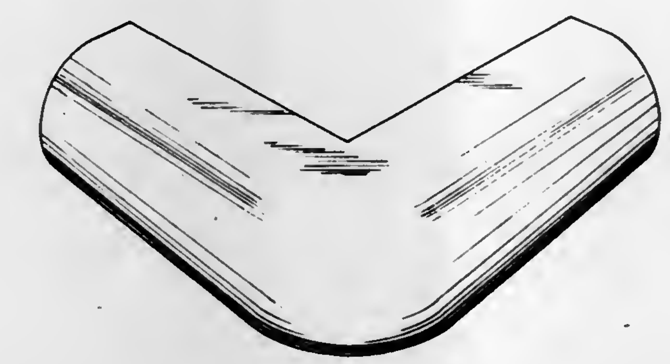

246,626
PILLOW
Seymour Shenk, 6470 Surrey Drive, Long Beach, Calif. 90815
Filed Aug. 4, 1975, Ser. No. 601,587
Term of patent 14 years
Int. Cl. D6—*99*
U.S. Cl. D6—201

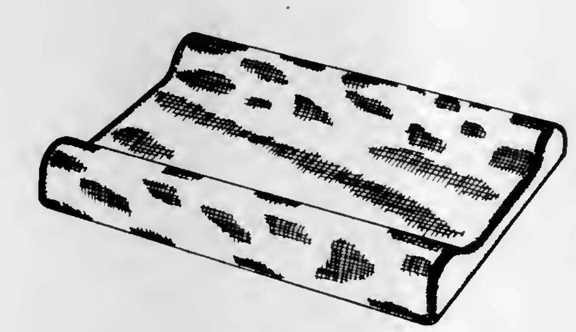

246,627
ROASTING PAN
Hirohisa Sugiyama, 6-17, 3-chome, Kamiaokinishi, Kawaguchi, Saitama, Japan
Filed Apr. 8, 1976, Ser. No. 675,194
Term of patent 14 years
Int. Cl. D7—*02*
U.S. Cl. D7—85

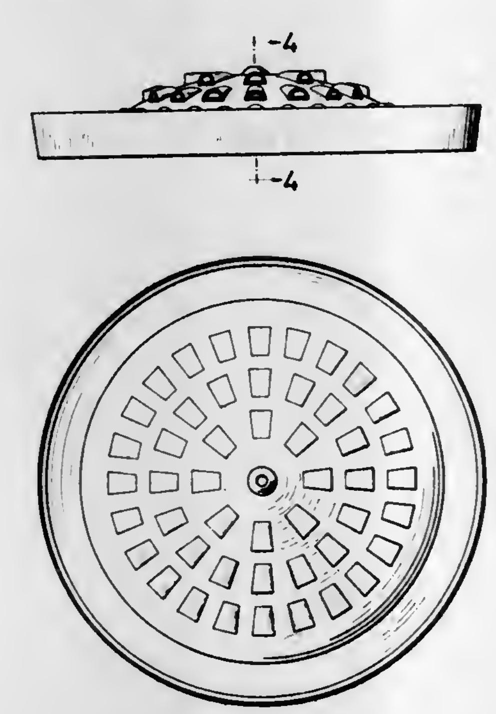

246,628
STEAM IRON
Thomas E. Hanson, Phoenixville, and Daniel A. Martin, Philadelphia, both of Pa., assignors to SCM Corporation, New York, N.Y.
Filed Apr. 19, 1976, Ser. No. 677,931
Term of patent 14 years
Int. Cl. D7—*05*
U.S. Cl. D7—202

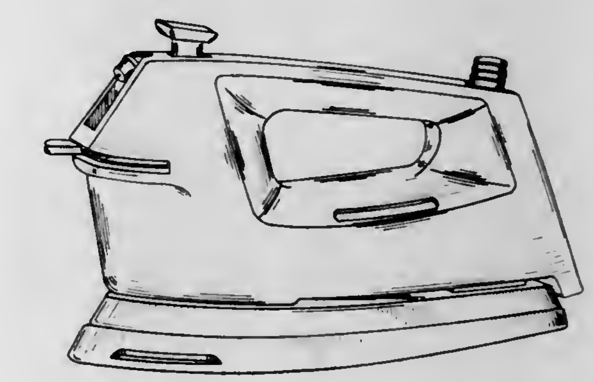

246,629
STEAM IRON
Thomas E. Hanson, Phoenixville, and Harry J. McVicker, Pottstown, both of Pa., assignors to SCM Corporation, New York, N.Y.
Filed Apr. 19, 1976, Ser. No. 678,008
Term of patent 14 years
Int. Cl. D7—*05*
U.S. Cl. D7—202

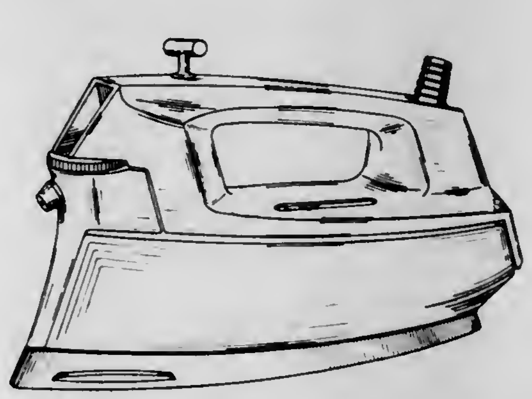

246,630
ELECTRICIAN'S COMBINATION TOOL
William H. Hayes, P.O. Box 514, Pelham, Ala. 35124
Filed Apr. 23, 1976, Ser. No. 679,767
Term of patent 14 years
Int. Cl. D8—*05*
U.S. Cl. D8—58

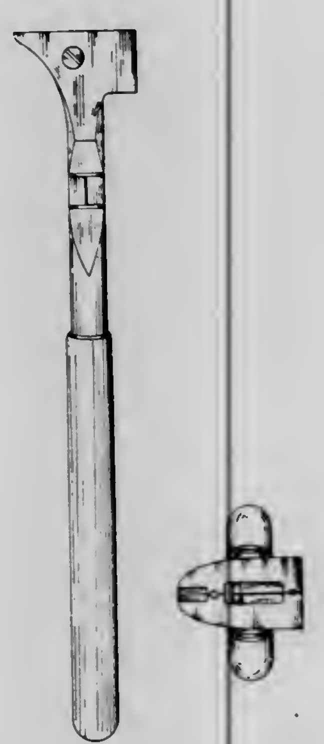

246,631
LUGGAGE HANDLE
Bela G. Szabo, Carnegie, Pa., assignor to Bruce Plastics, Inc., Pittsburgh, Pa.
Filed June 11, 1976, Ser. No. 695,049
Term of patent 14 years
Int. Cl. D8—*06*
U.S. Cl. D8—306

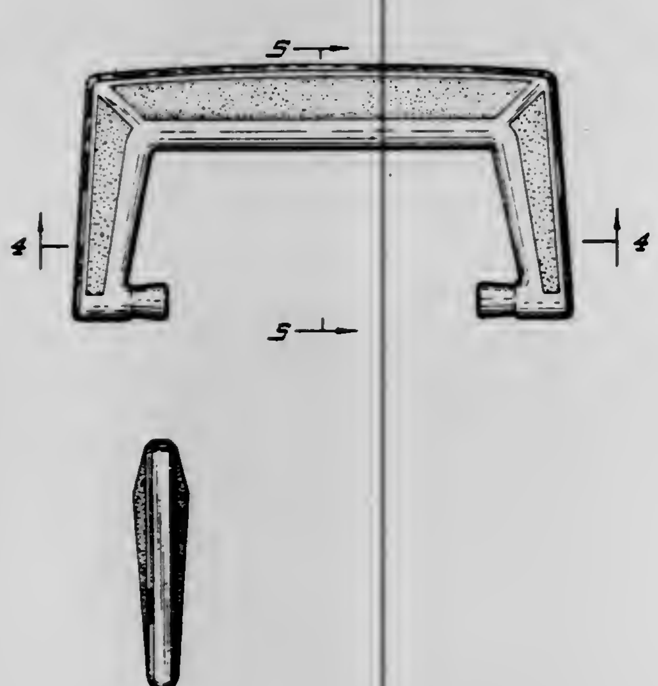

246,632
BOTTLE
Don R. Gulley, and Theodore G. Schad, Jr., both of Lafayette, La., assignors to Lou Ana Foods, Inc., Opelousas, La.
Filed Dec. 29, 1975, Ser. No. 645,209
Term of patent 14 years
Int. Cl. D9—*01*
U.S. Cl. D9—42

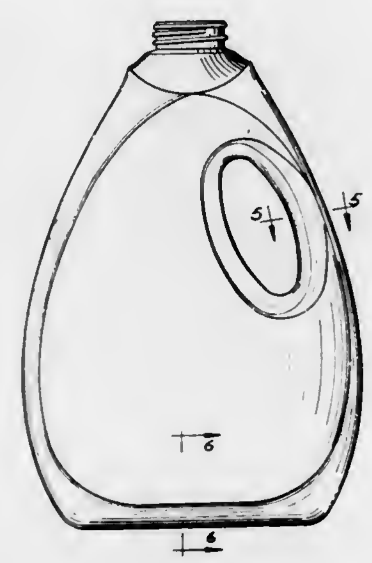

246,633
BOTTLE CARRIER
Thomas Evald Torokvei, Toronto, Canada, assignor to Scepter Manufacturing Company Limited, Toronto, Canada
Filed Dec. 8, 1975, Ser. No. 638,593
Claims priority, application Canada, Dec. 4, 1975, 040-12-75-5
Term of patent 14 years
Int. Cl. D9—*03*
U.S. Cl. D9—179

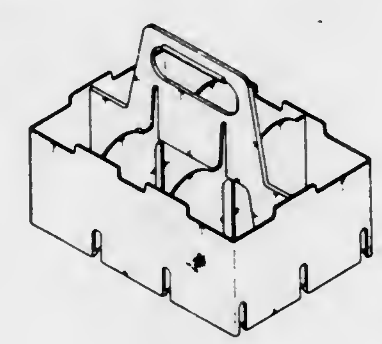

246,634
CONFECTION DISPENSER
Richard Levitt, Welsh and Swedesford Roads, North Wales, Pa. 19454
Filed June 15, 1976, Ser. No. 696,454
Term of patent 14 years
Int. Cl. D9—*03*
U.S. Cl. D9—224

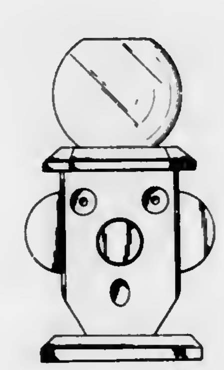

246,635
WALL-MOUNTED SMOKE DETECTOR
Melvin H. Boldt, Glenview; Thurber H. Morrison, Evanston, and Robert W. Becker, Naperville, all of Ill., assignors to National Presto Industries, Inc., Eau Claire, Wis.
Filed Oct. 8, 1976, Ser. No. 730,791
Term of patent 14 years
Int. Cl. D10—*05*
U.S. Cl. D10—106

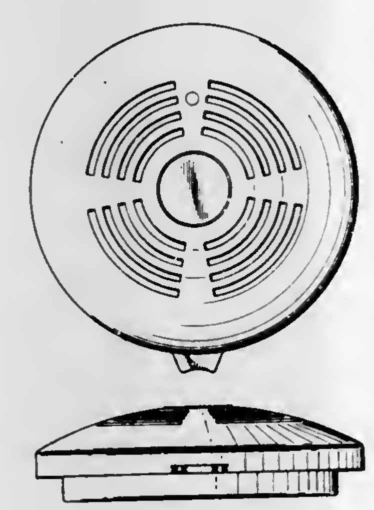

246,636
ATTACHABLE EMBLEM FOR JEWELRY
Richard E. Cone, 232 Clark St., Cambridge, Ohio 43725
Filed Sept. 8, 1975, Ser. No. 611,561
Term of patent 14 years
Int. Cl. D11—*01*
U.S. Cl. D11—89

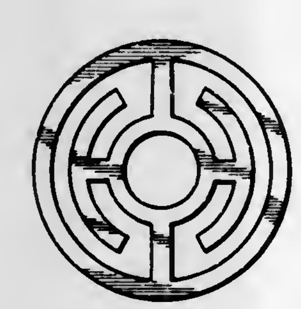

246,637
CONTAINER TO BE USED AS A VASE, MUG, OR THE LIKE
Yoshimitsu Kawade, Nagoya, Japan, assignor to Ben's Incorporated, Chicago, Ill.
Filed Oct. 12, 1976, Ser. No. 731,769
Claims priority, application Japan, June 7, 1976, 51-21048; June 7, 1976, 51-21049; July 7, 1976, 51-25908
Term of patent 14 years
Int. Cl. D11—*02;* D7—*01*
U.S. Cl. D11—149

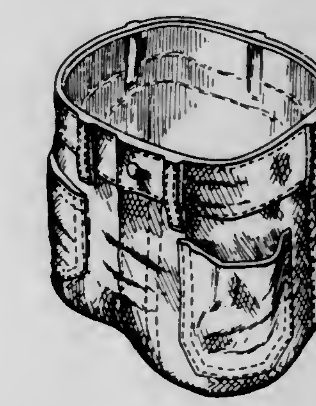

246,638
BICYCLE RAMP
Michael Byron Hegedus, 2380 E. Ohio, Denver, Colo. 80206
Filed Mar. 28, 1977, Ser. No. 781,655
Term of patent 14 years
Int. Cl. D12—*05*
U.S. Cl. D12—53

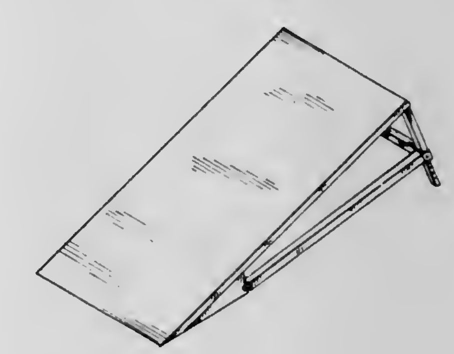

246,639
BOAT DECK
Robert L. Burns, 16481 Peale Lane, Huntington Beach, Calif. 92649, and Barry McCown, 3800 Daisy Circle, Seal Beach, Calif. 90740
Filed Oct. 12, 1976, Ser. No. 731,450
Term of patent 14 years
Int. Cl. D12—*06*
U.S. Cl. D12—70

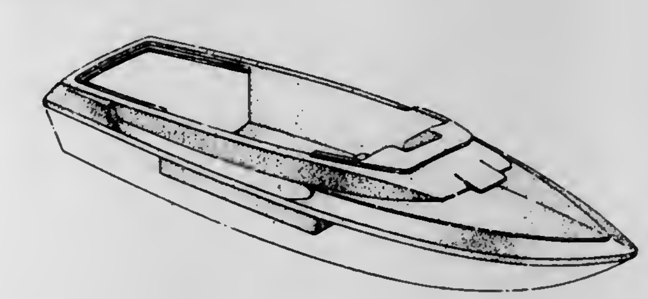

246,640
VEHICLE TIRE
Kazuo Matsuda, Kodaira, and Hiroshi Kojima, Hino, both of Japan, assignors to Bridgestone Tire Company Limited, Tokyo, Japan
Filed Jan. 28, 1977, Ser. No. 763,296
Claims priority, application Japan, Aug. 6, 1976, 51-30684
Term of patent 14 years
Int. Cl. D12—*15*
U.S. Cl. D12—141

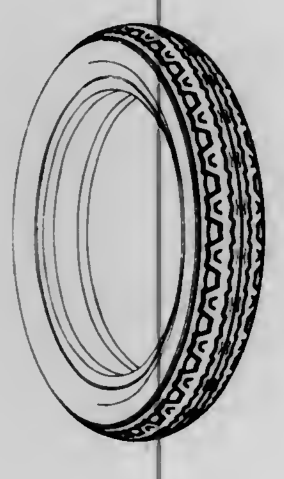

246,641
VEHICLE TIRE
Kazuo Matsuda, Kodaira, and Hiroshi Kojima, Hino, both of Japan, assignors to Bridgestone Tire Company Limited, Tokyo, Japan
Filed Feb. 3, 1977, Ser. No. 765,126
Claims priority, application Japan, Sept. 22, 1976, 51-37323
Term of patent 14 years
Int. Cl. D12—*15*
U.S. Cl. D12—141

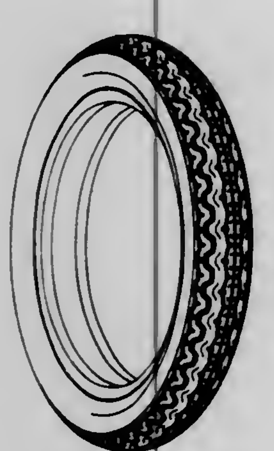

246,642
VEHICLE TIRE
Kazuo Matsuda, Kodaira, and Hiroshi Kojima, Hino, both of Japan, assignors to Bridgestone Tire Company Limited, Tokyo, Japan
Filed Feb. 3, 1977, Ser. No. 765,128
Claims priority, application Japan, Sept. 22, 1976, 51-37324
Term of patent 14 years
Int. Cl. D12—*15*
U.S. Cl. D12—141

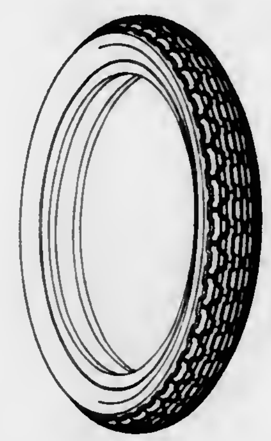

246,643
VEHICLE HITCHING DEVICE
Chester A. Shumway, 2801 W. Lawrence Lane, Phoenix, Ariz. 85021
Filed Sept. 20, 1976, Ser. No. 724,907
Term of patent 14 years
Int. Cl. D12—*16*
U.S. Cl. D12—162

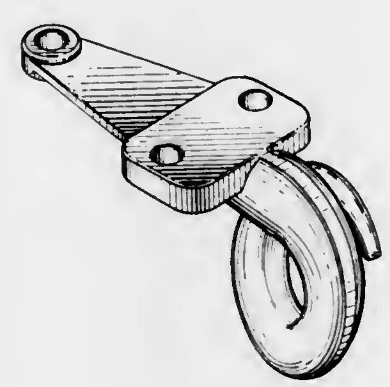

246,644
WINDOW VENT
Raymond A. McCarroll, 1725 Newcastle, Grosse Pointe Woods, Mich. 48236
Filed Oct. 6, 1976, Ser. No. 730,062
Term of patent 14 years
Int. Cl. D12—*16*
U.S. Cl. D12—181

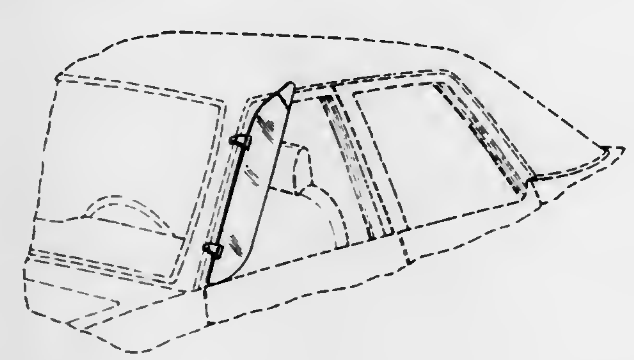

246,645
CYCLE FENDER
Preston L. Petty, 403 N. Main St., Newberg, Oreg. 97132
Filed Sept. 13, 1976, Ser. No. 722,617
Term of patent 7 years
Int. Cl. D12—*11*
U.S. Cl. D12—186

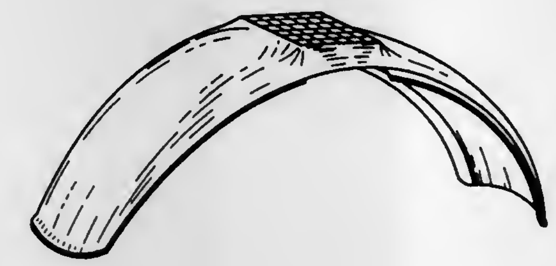

246,646
CLOVERLEAF INSULATOR ASSEMBLY
Paul E. Lewis, Mexico, and Daren A. Clark, Centralia, both of Mo., assignors to A. B. Chance Company, Centralia, Mo.
Filed July 12, 1976, Ser. No. 704,514
Term of patent 14 years
Int. Cl. D13—*03;* D8—*08*
U.S. Cl. D13—17

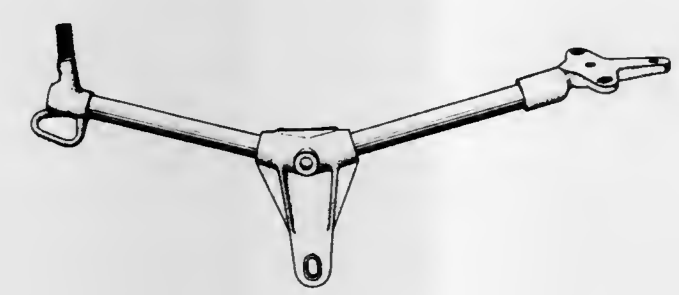

246,647
ELECTRICAL INSULATING SLEEVE
Robert J. Budd, Ormond Beach, Fla., assignor to Homac Mfg. Company, Garwood, N.J.
Filed Nov. 18, 1976, Ser. No. 742,864
Term of patent 14 years
Int. Cl. D13—*03*
U.S. Cl. D13—17

246,648
FOOT OPERATED CONTROL UNIT
Ronald J. Braaten, North Woodstock, Conn., assignor to The Linemaster Switch Corporation, Woodstock, Conn.
Filed Sept. 13, 1976, Ser. No. 722,351
Term of patent 14 years
Int. Cl. D13—*03*
U.S. Cl. D13—36

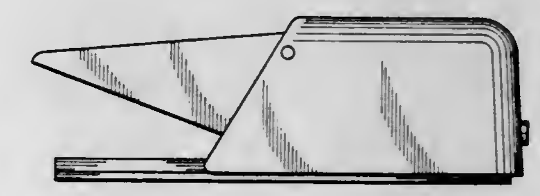

246,649
FOOT OPERATED CONTROL UNIT
Ronald J. Braaten, North Woodstock, Conn., assignor to The Linemaster Switch Corporation, Woodstock, Conn.
Filed Oct. 6, 1976, Ser. No. 730,264
Term of patent 14 years
Int. Cl. D13—*03*
U.S. Cl. D13—36

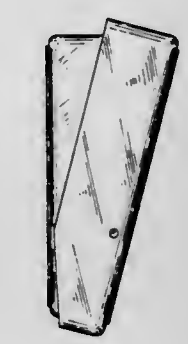

246,650
PUSH BUTTON TELEPHONE
Antonio Peral-Hernandez, Madrid, Spain, assignor to Amper S.A., Madrid, Spain
Filed Aug. 3, 1976, Ser. No. 711,379
Claims priority, application Spain, Feb. 4, 1976, 86205
Term of patent 14 years
Int. Cl. D14—*03*
U.S. Cl. D14—53

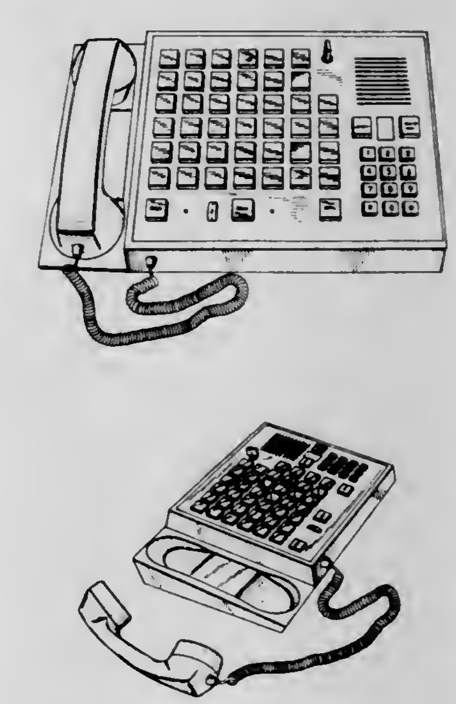

246,651
TELEPHONE
Howard J. Morrison, Deerfield, and Douglas P. Montague, Chicago, both of Ill., assignors to Marvin Glass & Associates, Chicago, Ill.
Filed Sept. 16, 1976, Ser. No. 723,739
Term of patent 14 years
Int. Cl. D14—*03*
U.S. Cl. D14—53

246,652
CAMERA OR SIMILAR ARTICLE
Tetsuro Ooya, Osaka, and Keiji Takechi, Takeda-Okenoi, both of Japan, assignors to Minolta Camera Kabushiki Kaisha, Osaka, Japan
Filed May 25, 1976, Ser. No. 689,898
Claims priority, application Japan, Dec. 1, 1975, 50-47370
Term of patent 14 years
Int. Cl. D16—*01*
U.S. Cl. D16—06

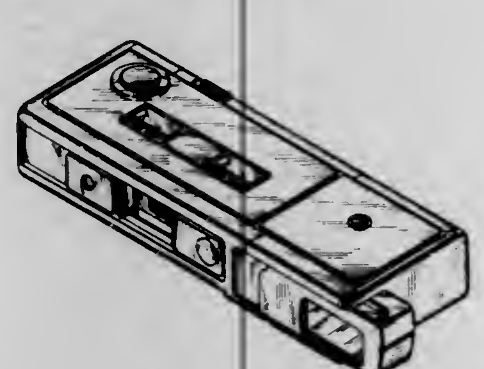

246,653
BINOCULARS
Masakazu Tomatsuri, Tokyo, Japan, assignor to Nippon Kogaku K.K., Tokyo, Japan
Filed Jan. 8, 1976, Ser. No. 647,453
Term of patent 14 years
Int. Cl. D16—*06*
U.S. Cl. D16—59

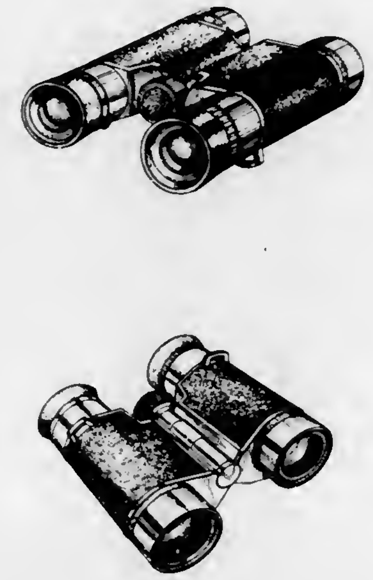

246,654
PAIR OF SPECTACLES
Richard W. Canavan, III, South Woodstock, Conn., assignor to American Optical Corporation, Southbridge, Mass.
Filed Oct. 28, 1976, Ser. No. 736,644
Term of patent 14 years
Int. Cl. D16—*06*
U.S. Cl. D16—65

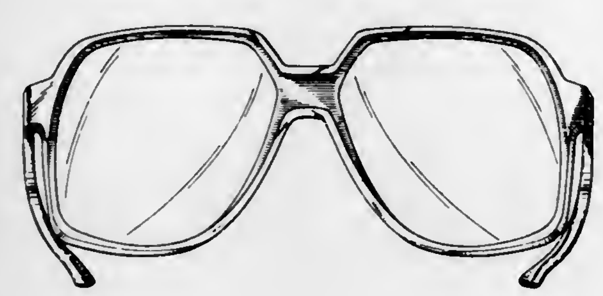

246,655
GOLF TRAINING GLASSES
Robert Van Horn, 1732 N. Decatur, Las Vegas, Nev. 89108, and Martin Mohar, 4024 Esmeralda, Las Vegas, Nev. 89102
Filed July 12, 1976, Ser. No. 704,350
Term of patent 14 years
Int. Cl. D16—*06*
U.S. Cl. D16—65

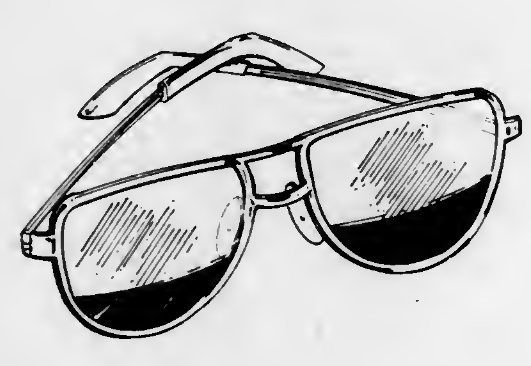

246,656
PAIR OF SPECTACLES
David W. Johnsen, Woodstock, Conn., assignor to American Optical Corporation, Southbridge, Mass.
Filed Oct. 28, 1976, Ser. No. 736,645
Term of patent 14 years
Int. Cl. D16—*06*
U.S. Cl. D16—65

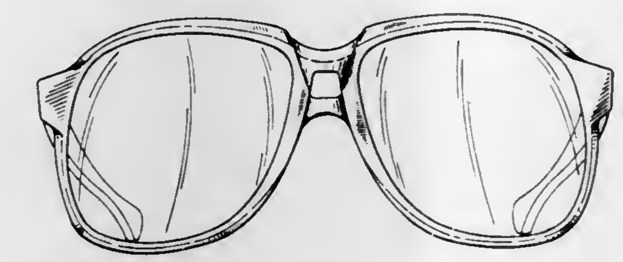

246,657
COMBINED EYEGLASS HOLDER AND DESK SET BASE
Jerome Mende, 109 Roman Ave., Staten Island, N.Y. 10314
Filed Sept. 17, 1973, Ser. No. 398,240
The portion of the term of this patent subsequent to Oct. 7, 1989, has been disclaimed.
Term of patent 14 years
Int. Cl. D3—*02*
U.S. Cl. D16—82

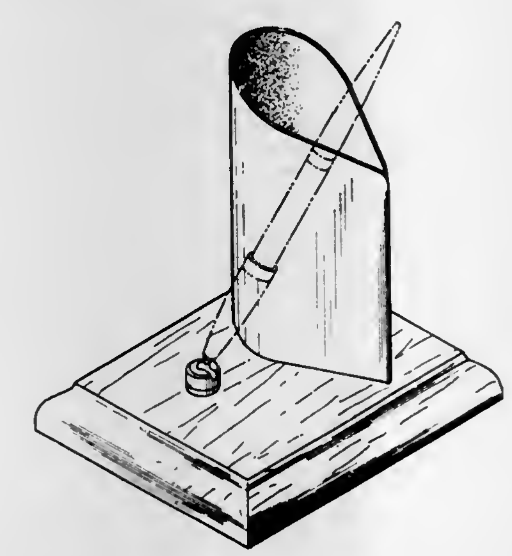

246,658
CLIP FOR A WRITING INSTRUMENT OR SIMILAR ARTICLE
Charles J. Ortega, and Richard Sidney Boyd, both of Los Angeles, Calif., assignors to Pentel Kabushiki Kaisha, Tokyo, Japan
Filed Apr. 29, 1976, Ser. No. 681,461
Term of patent 14 years
Int. Cl. D19—*06*
U.S. Cl. D19—56

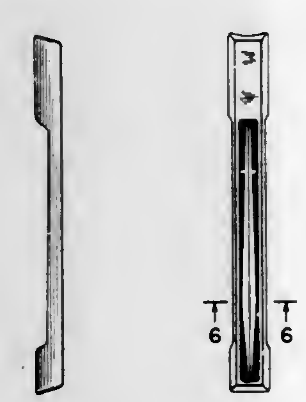

246,659
TAPE DISPENSER
Luigi Secondo Vailati, Vedano Olona (Varese), Italy, assignor to S.I.A.T. Societa' Internazionale Applicazioni Tecniche S.p.A., Milan, Italy
Filed Sept. 29, 1975, Ser. No. 617,729
Claims priority, application Italy, Mar. 27, 1975, 21087/75
Term of patent 7 years
Int. Cl. D19—*02*
U.S. Cl. D19—69

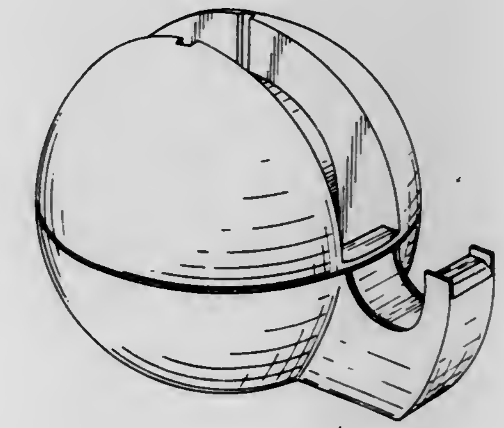

246,660
TOP BARREL FOR GUNS
Ennio Mattarelli, Bologna, Italy, assignor to Manifattura Armi Perazzi S.p.A.
Filed Apr. 13, 1977, Ser. No. 787,216
Claims priority, application Italy, Nov. 26, 1976, 22622/76
Term of patent 14 years
Int. Cl. D22—*01*
U.S. Cl. D22—8

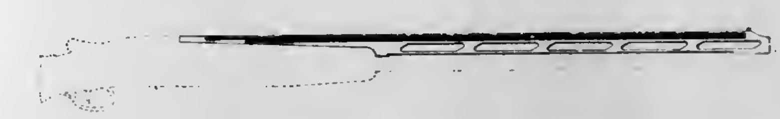

246,661
FISHING ROD HOLDER
Kenneth D. Engblom, 1315 Ajanta, Rowland Heights, Calif. 91748
Filed Jan. 12, 1976, Ser. No. 648,185
Term of patent 14 years
Int. Cl. D22—*05*
U.S. Cl. D22—13

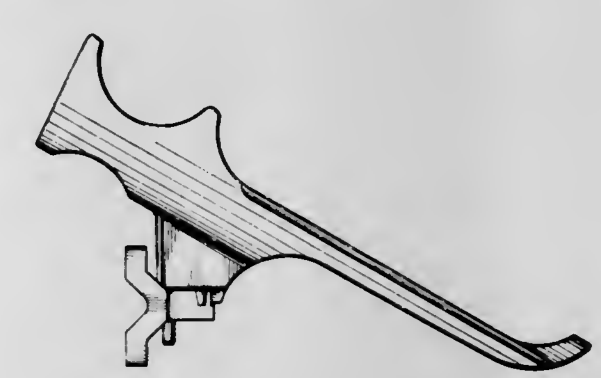

246,662
FISHING REEL
Kiyoshi Okada, Koganei, Japan, assignor to Daiwa Seiko, Inc., Higashi-kurume, Japan
Filed Aug. 25, 1976, Ser. No. 717,781
Claims priority, application Japan, Feb. 28, 1976, 51-6803
Term of patent 14 years
Int. Cl. D22—*05*
U.S. Cl. D22—25

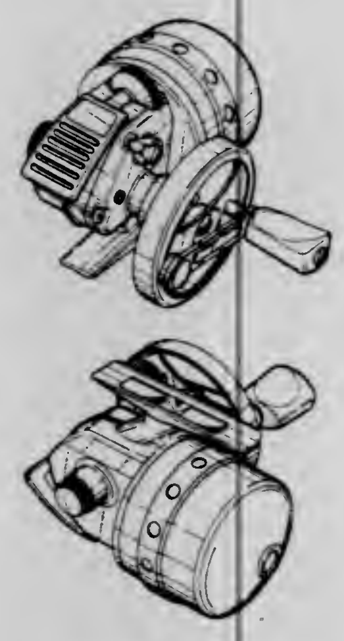

246,663
MULTI-PURPOSE FISHERMAN'S TOOL, OR SIMILAR ARTICLE
Jack T. Sing, P.O. Box 287, Murrell's Inlet, S.C. 29576
Filed Apr. 20, 1976, Ser. No. 678,464
Term of patent 14 years
Int. Cl. D7—*03;* D8—*03;* D22—*05*
U.S. Cl. D22—31

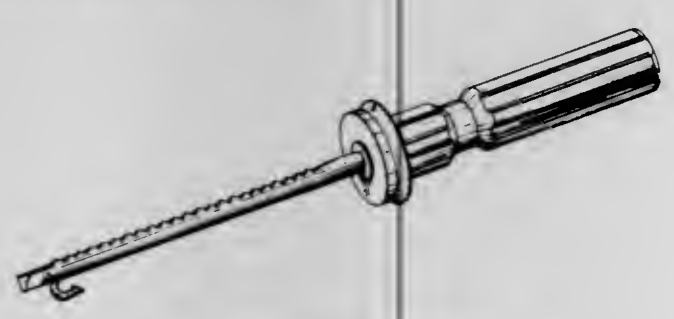

246,664
FISHING LURE
Anthony T. Bifano, 2909 Fairmont, Dallas, Tex. 75201
Filed Jan. 3, 1977, Ser. No. 756,184
Term of patent 14 years
Int. Cl. D22—*05*
U.S. Cl. D22—27

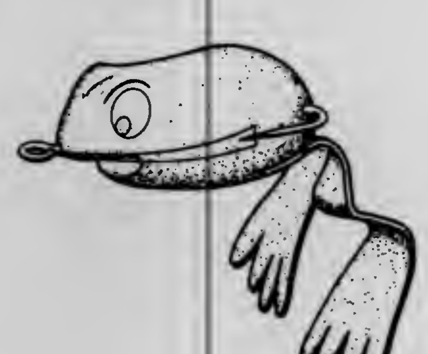

246,665
DENTAL RADIOGRAPHIC APPARATUS FOR FORMING AND CONFINING AN X-RAY BEAM
William J. Updegrave, Riverbend Apt. 603, 3010 NE. 16th Ave., Fort Lauderdale, Fla. 33334
Continuation-in-part of Ser. No. 672,330, March 31, 1976, abandoned. This application Mar. 2, 1977, Ser. No. 773,662
Term of patent 14 years
Int. Cl. D24—*01*
U.S. Cl. D24—2

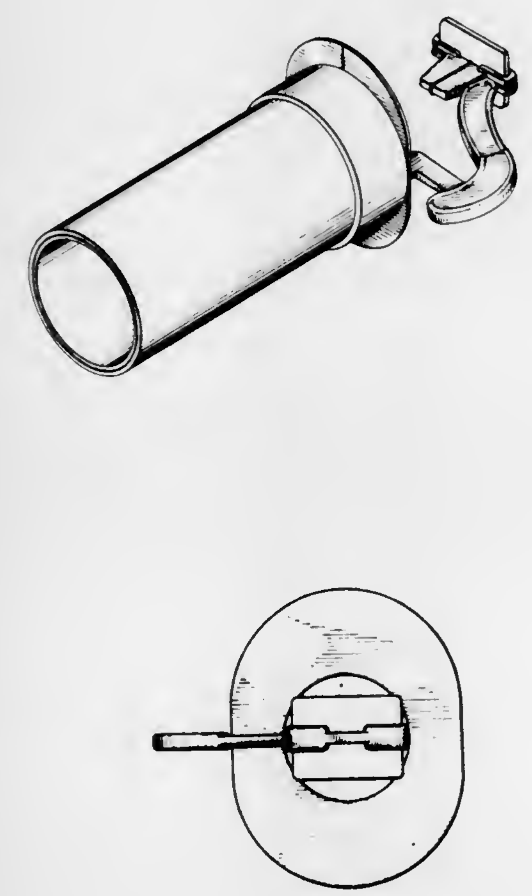

246,666
BIOLOGICAL MONITORING CHAMBER
Harold E. Schlichting, Jr., 151 S. Ridge St., Port Sanilac, Mich. 48469
Filed Oct. 8, 1974, Ser. No. 512,661
Term of patent 14 years
Int. Cl. D24—*01*
U.S. Cl. D24—8

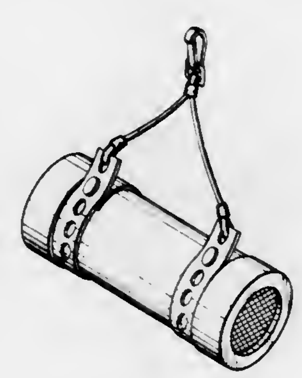

246,667
MOTOR PUMP HOUSING FOR A DENTAL IRRIGATOR
Frederick G. Mackay, Tarzana; Spencer L. Mackay, Glendale, and Allan B. Johnson, Tarzana, all of Calif., assignors to Teledyne Industries, Inc.
Filed Dec. 13, 1976, Ser. No. 749,672
Term of patent 14 years
Int. Cl. D24—*03*
U.S. Cl. D24—15

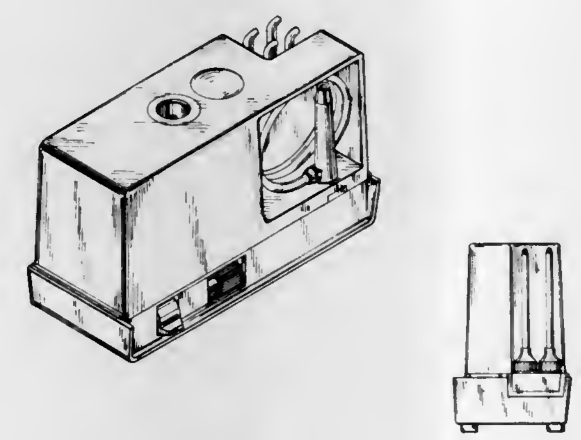

246,668
MOTOR PUMP HOUSING FOR A DENTAL JET IRRIGATOR AND COVER THEREFOR
Frederick G. Mackay, Tarzana; Spencer L. Mackay, Glendale, and Allan B. Johnson, Tarzana, all of Calif., assignors to Teledyne Industries, Inc.
Filed Dec. 13, 1976, Ser. No. 749,671
Term of patent 14 years
Int. Cl. D24—*03*
U.S. Cl. D24—15

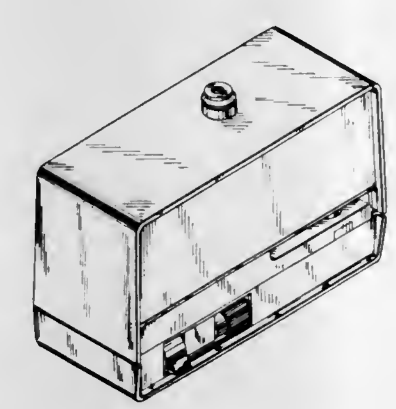

246,669
RESTAURANT BUILDING
Michael B. Spears, 6345 S. Evans, Chicago, Ill. 60637
Filed Apr. 5, 1976, Ser. No. 673,971
Term of patent 14 years
Int. Cl. D25—*03*
U.S. Cl. D25—19

246,670
DATA PROCESSING ENSEMBLE OR SIMILAR ARTICLE
Loring C. Bixler, Vestal, N.Y.; Myron F. Davis; Francis J. Eisenman, Jr., both of Boca Raton, Fla., and Edward R. Wiener, Vestal, N.Y., assignors to International Business Machines Corporation, Armonk, N.Y.
Division of Ser. No. 24,036, July 20, 1970, Pat. No. Des. 225,645. This application Aug. 13, 1971, Ser. No. 171,808
Term of patent 14 years
Int. Cl. D14—*02*
U.S. Cl. D14—44

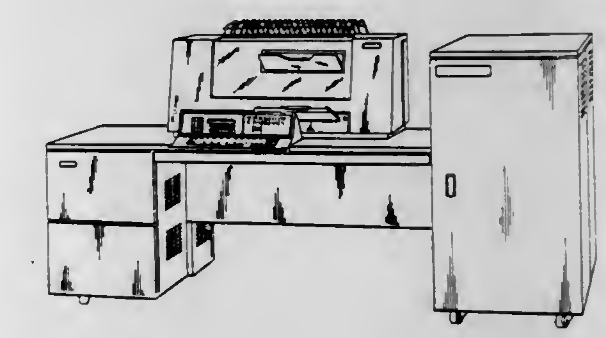

246,671
MOUTHPIECE BLOCK FOR UNDERWATER BREATHING APPARATUS
Leon A. Cerniway, 23792 Via El 'Rocio, Mission Viejo, Calif. 92675
Filed Dec. 15, 1975, Ser. No. 640,438
Term of patent 14 years
Int. Cl. D29—*02*
U.S. Cl. D29—7

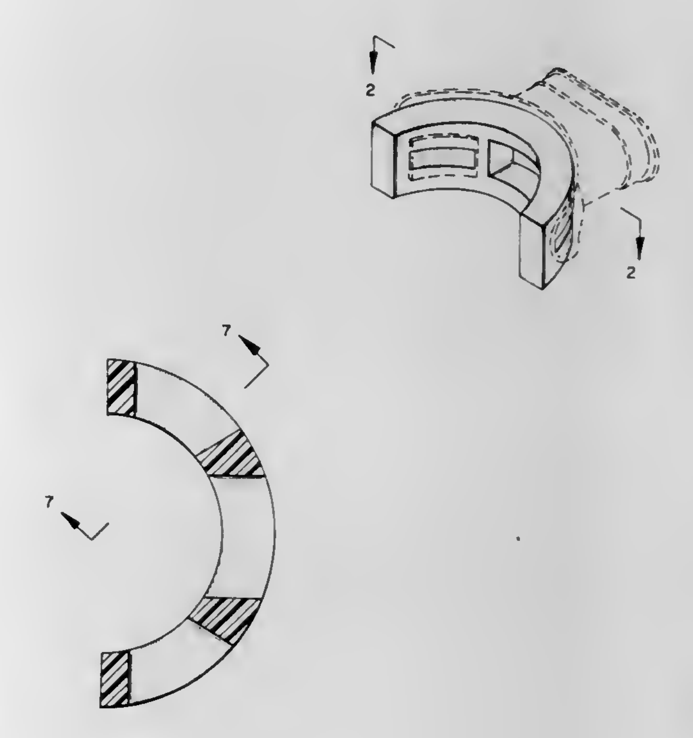

246,672
FLEA SCOOP FOR AN ANIMAL GROOMING COMB
John S. Taylor, 201 W. Collins, Space 86, Orange, Calif. 92667
Filed May 7, 1976, Ser. No. 684,296
Term of patent 14 years
Int. Cl. D30—*99*
U.S. Cl. D30—40

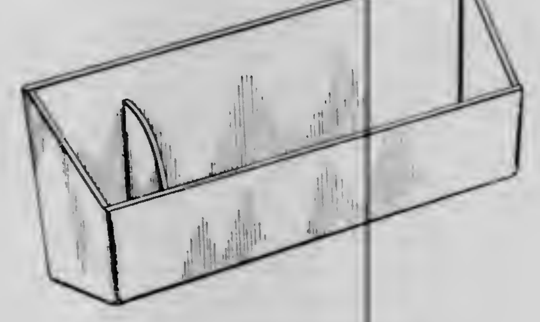

246,673
DOLL FIGURE
Ida Marie Lund, Morelvej 227, Fruens Boge, Denmark (5250)
Filed Sept. 24, 1976, Ser. No. 726,219
Claims priority, application Denmark, Mar. 30, 1976, 304/76
Term of patent 14 years
Int. Cl. D21—*01*
U.S. Cl. D34—4 A

246,674
TABLE FOR A SOCCER GAME
Claudio Cecchetti, Via Verdi, 54 Cernusco Sul Naviglio (Province of Milan), Italy
Filed June 4, 1976, Ser. No. 693,058
Claims priority, application Italy, Dec. 11, 1975, 22870/75
Term of patent 14 years
Int. Cl. D21—*01*
U.S. Cl. D34—5 SS

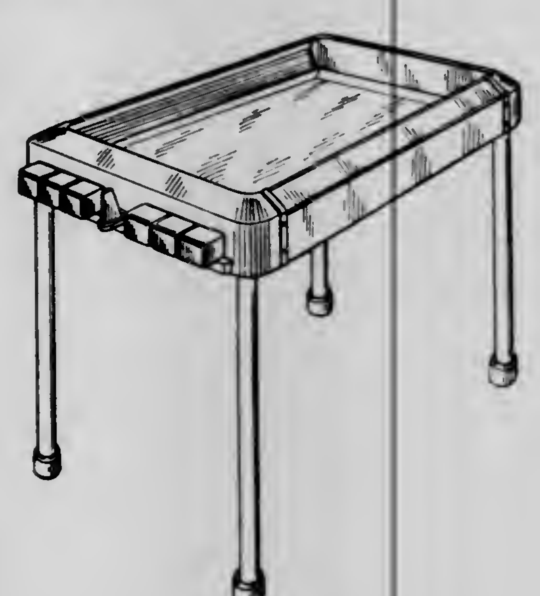

246,675
BOWLING COURSE
Guy Neymarc, Paris, France, assignor to Establissements Lagesse et Neymarc, Paris, France
Filed July 14, 1976, Ser. No. 705,041
Claims priority, application France, Feb. 4, 1976, 76.38910
Term of patent 14 years
Int. Cl. D21—*01*
U.S. Cl. D34—5 BB

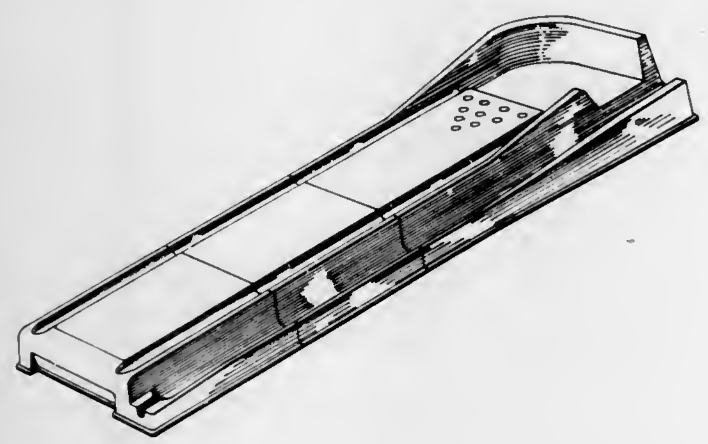

246,676
TOY VEHICLE
Shinroku Nakao, Yokohama, Japan, assignor to Combi Co., Ltd., Tokyo, Japan
Filed Jan. 6, 1976, Ser. No. 646,912
Term of patent 14 years
Int. Cl. D21—*01*
U.S. Cl. D34—15 AN

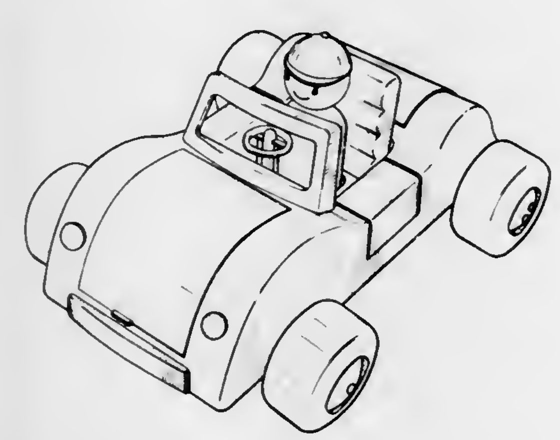

246,677
PROJECTOR KIT FOR CINEMA AND TELEVISION EXTERIORS
Georg Nigg, Heinrichstrasse 69, 8005 Zurich, Switzerland
Filed May 10, 1976, Ser. No. 684,897
Term of patent 14 years
Int. Cl. D26—*05*
U.S. Cl. D48—20 K

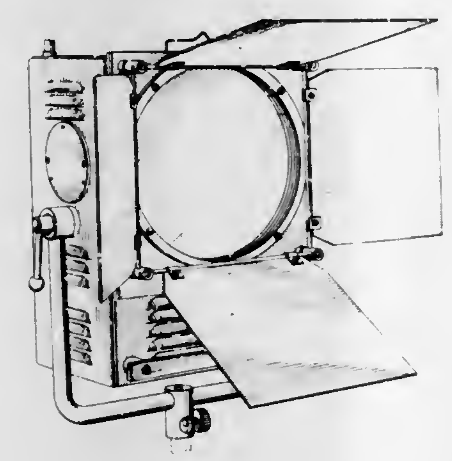

246,678
FLUORESCENT LAMP
Yiu Chung Lap, 11, Pat Tat St., Lee Chung Industrial Bldg., San Po Kong, Kowloon, Hong Kong
Filed June 25, 1976, Ser. No. 699,986
Term of patent 14 years
Int. Cl. D26—*02*
U.S. Cl. D48—24 R

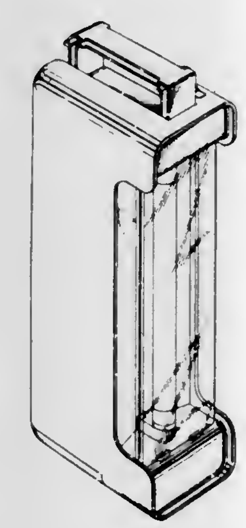

246,679
TOOL PORTFOLIO, OR SIMILAR ARTICLE
Lo Lin Chuen, Hong Kong, Hong Kong, assignor to Glovemakers, Inc., Chicago, Ill.
Filed Mar. 29, 1976, Ser. No. 671,252
Term of patent 14 years
Int. Cl. D3—*02*
U.S. Cl. D87—1 R

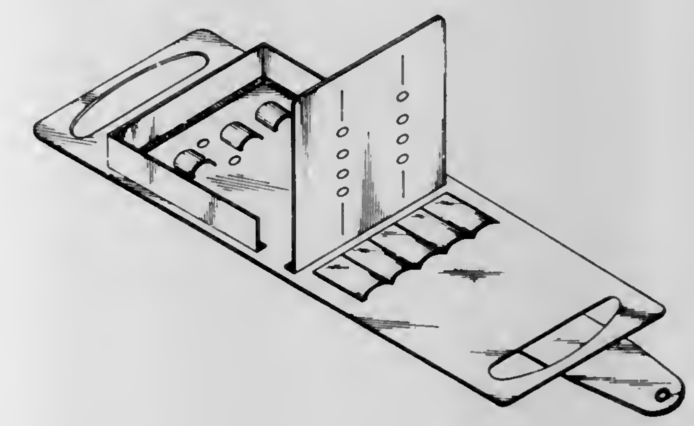

246,680
CARRYING BAG
Alma J. Sobol, 38121 Lansing Court, Fremont, Calif. 94536
Filed Apr. 5, 1976, Ser. No. 673,440
Term of patent 14 years
Int. Cl. D3—*01*
U.S. Cl. D87—3 F

LIST OF PATENTEES

TO WHOM

PATENTS WERE ISSUED ON THE 13TH DAY OF DECEMBER, 1977

NOTE.—Arranged in accordance with the first significant character or word of the name (in accordance with city and telephone directory practice).

A/S Niro Atomizer: *See—*
  Hovmand, Svend; and Sorensen, Erik Dankvard, 4,062,641, Cl. 425-6.000.
AB Institutet for Innovationsteknik: *See—*
  Miller, Arvo Ivar; and Bjorklund, Fritz Rune, 4,062,913, Cl. 264-24.000.
AB Motala Verkstad: *See—*
  Fredriksson, Roland, 4,062,254, Cl. 81-57.380.
AB Slipmaterial-Naxos: *See—*
  Malm, Bjorn, 4,062,153, Cl. 51-207.000.
AB Ziristor: *See—*
  Stark, Olof Sven Soren, 4,062,712, Cl. 156-244.000.
Abbott, Frank R., to United States of America, Navy. High fidelity low frequency transducer for use at great depth. 4,063,215, Cl. 340-8.0LF.
Abbott Laboratories: *See—*
  Hallas, Robert; Martin, Jerry Roy; and Tadanier, John Soloman, 4,063,014, Cl. 536-9.000.
Abd el Wahid, Ali: *See—*
  Falckenberg, Richard; and Abd el Wahid, Ali, 4,062,653, Cl. 23-273.00V.
Abdou, John J., to Allis-Chalmers Corporation. Adjusting and sealing means for high pressure gas storage tank. 4,063,053, Cl. 200-148.00R.
Abic Ltd.: *See—*
  Stolar, Morris E., 4,062,940, Cl. 424-80.000.
Abrams, Richard L.; and Yariv, Amnon, to Hughes Aircraft Company. Parametric frequency converter. 4,063,195, Cl. 332-7.510.
ACF Industries, Incorporated: *See—*
  Kull, George A., 4,062,596, Cl. 302-52.000.
Acieries Reunies de Burbach-Eich-Dudelange S.A. ARBED: *See—*
  Funck, Alfred; and Simon, Jo, 4,063,063, Cl. 219-121.0LM.
Acushnet Company: *See—*
  Lynch, Francis deSales; Reid, Walter L., Jr.; and Jepson, John W., 4,063,259, Cl. 354-120.000.
Adachi, Keiichi: *See—*
  Hara, Hiroshi; Adachi, Keiichi; and Kusaba, Hideyuki, 4,062,684, Cl. 96-60.00R.
Addressograph-Multigraph Corporation: *See—*
  Szabo, Francis S., 4,063,256, Cl. 354-13.000.
Adkins, Richard Wayne; and Mayer, James R., to Gardner-Denver Company. Hydraulic percussion tool with impact blow and frequency control. 4,062,411, Cl. 173-115.000.
Adler, Franklin P., to Pullman Incorporated. Gate operating mechanism for a hopper car. 4,062,460, Cl. 214-58.000.
Adler, Klaus: *See—*
  Manner, Erich; Adler, Klaus; Pichler, Engelbert; Bauer, Johann; and Sommer, Hans, 4,062,715, Cl. 156-334.000.
Adolph, Horst G., to United States of America, Navy. Acetals derived from negatively substituted aldehydes and polynitro- or halonitroethanols. 4,062,897, Cl. 260-615.00A.
Affiliated Hospital Products, Inc.: *See—*
  Stern, Robert G.; and Mitchell, Larry D., 4,062,075, Cl. 5-63.000.
AG Systems, Inc.: *See—*
  Wosmek, Raymond A., 4,062,306, Cl. 111-7.000.
Agence Nationale de Valorisation de la Recherche (ANVAR): *See—*
  Buvet, Rene; Vallot, Roger; Messina, Richard; Gal, Jacques; and Yu, Liang-Tse, 4,062,745, Cl. 204-131.000.
AGFA-GEVAERT N.V.: *See—*
  Duden, Emanuel Hubert, 4,063,101, Cl. 250-475.000.
  Laridon, Urbain Leopold; Van Brandt, Rene Alois; and Poot, Albert Lucien, 4,062,682, Cl. 96-29.00L.
  Monbaliu, Marcel Jacob; Van Poucke, Raphael Karel; Vrydaghs, Roger Henri; Credner, Hans-Heinrich; and Meier, Ernst, 4,062,683, Cl. 96-56.500.
Aggarwal, Roshan L.; Lee, Neville K. S.; and Lax, Benjamin, to Massachusetts Institutes of Technology. Method of and apparatus for generating tunable coherent radiation by noncollinear phase-matched sum-difference frequency optical mixing. 4,063,105, Cl. 307-88.300.
Ahiko, Kenkichi: *See—*
  Niki, Hiroshi; Deya, Eiki; Doi, Toru; Ahiko, Kenkichi; and Hayashi, Hiromichi, 4,062,409, Cl. 426-643.000.
Ahn, Byung K.; and Dotson, Ronald L. Electrolytic process for potassium hydroxide. 4,062,743, Cl. 204-98.000.
Ajuria, Carlos Ibanez. Device for treating deformable particles with the counterflowing liquids. 4,062,722, Cl. 162-234.000.
Akkerman, Neil H.; and Ross, Richard J., to Baker International Corporation. Valve and lubricator apparatus. 4,062,406, Cl. 166-323.000.
Akzona Incorporated: *See—*
  van der Burg, Willem Jacob, 4,062,840, Cl. 260-239.00D.
  van der Burg, Willem Jacob, 4,062,848, Cl. 260-268.0PC.
Albert Rolland S.A.: *See—*
  Coirault, Raymond, 4,062,974, Cl. 424-308.000.
Albertazzi, Gastone, to Finike Italiana Marposs Soc. In Accomandita Semplice di Mario Possati & C. Apparatus for measuring errors in concentricity relative to two surfaces of rotation. 4,062,124, Cl. 33-174.00Q.
Albertson, Diane C. Reader's blanket. 4,062,076, Cl. 5-334.00R.
Albright, Jay Donald: *See—*
  Allen, George Rodger, Jr.; Hanifin, John William, Jr.; Moran, Daniel Bryan; and Albright, Jay Donald, 4,062,958, Cl. 424-250.000.
Alcan Research and Development Limited: *See—*
  Wilson, Wayne Richard; and Kirkpatrick, William James, 4,062,570, Cl. 285-22.000.
Alcorn, George Edward; Feeley, James Downer; and Lyman, Julian Turner, to International Business Machines Corporation. Process for forming a ledge-free aluminum-copper-silicon conductor structure. 4,062,720, Cl. 156-643.000.
Aldridge, Clifton; and Meyer, Michael C., to McDonnell Douglas Corporation. Sensitive pH indicator. 4,062,876, Cl. 260-391.000.
Allan, G. Graham; and Neogi, Sreeman Amar Nath, to University of Washington. Synthetic polymers furnishing controlled release of a biologically active component during degradation. 4,062,855, Cl. 260-295.0PA.
Allatt Limited: *See—*
  Peters, Abram, 4,062,559, Cl. 280-460.00R.
Allen, Archelaius Dawson, to Gullick Dobson Limited. Mine roof supports. 4,062,194, Cl. 61-45.00D.
Allen, Bobbie J.: *See—*
  Wagner, Eugene R.; and Allen, Bobbie J., 4,062,975, Cl. 424-319.000.
Allen, George Rodger, Jr.; Hanifin, John William, Jr.; Moran, Daniel Bryan; and Albright, Jay Donald, to American Cyanamid Company. Method of treating anxiety and compositions therefor. 4,062,958, Cl. 424-250.000.
Allen, Robert H. Spotlight mounted camera for vehicles. 4,063,258, Cl. 354-81.000.
Allen, Shelby A.; and Black, Neville R., to Morris, Charles Nick. Magnetically operated warning device. 4,062,314, Cl. 116-85.000.
Alley, Robert Philbrick: *See—*
  Klett, Keith Karl; and Alley, Robert Philbrick, 4,063,108, Cl. 307-64.000.
Alliance Machine Company, The: *See—*
  Barnes, Arthur K.; and Stevens, H. T., 4,062,296, Cl. 105-163.00R.
Allied Chemical Corporation: *See—*
  Figiel, Francis J., 4,062,794, Cl. 252-171.000.
  Millray, Robert, 4,062,287, Cl. 102-39.000.
  Millray, Robert, 4,062,288, Cl. 102-39.000.
  Sifniades, Stylianos; and Boyle, William J., Jr., 4,062,839, Cl. 260-239.30R.
Allis-Chalmers Corporation: *See—*
  Abdou, John J., 4,063,053, Cl. 200-148.00R.
  McFarlin, William B., 4,063,204, Cl. 335-193.000.
  Moe, Richard G., 4,062,410, Cl. 172-708.000.
Allison, William D., to Ford Motor Company. Steering linkage and tie rod assembly. 4,062,637, Cl. 403-151.000.
Alt, Robert M., Sr.: *See—*
  Butterfield, Max E.; and Alt, Robert M., Sr., 4,062,577, Cl. 292-262.000.
Altenburger, Karl. Ski brake. 4,062,561, Cl. 280-605.000.
Altenhoner, Klaus; Jansen, Walter; Knop, Klaus; and Reering, Jan G., to Thyssen Purofer GmbH. Apparatus for the direct reduction of iron ore to sponge iron. 4,062,529, Cl. 266-156.000.
Alvarez, Marcelino. Portable tool for stripping metal sheathing from heavy conductive cable. 4,062,110, Cl. 30-90.800.
Amalgamated Enterprises: *See—*
  Lerman, Victor S., 4,062,143, Cl. 46-6.000.
Amemiya, Hiroshi; Tarui, Tadaaki; and Yoneyama, Tsuneo, to Tokyo Shibaura Electric Co., Ltd. Analog-digital converter. 4,063,236, Cl. 340-347.0NT.
American Can Company: *See—*
  Zugcic, Joseph P.; and Whiting, Kevin, 4,062,311, Cl. 113-7.00R.
American Cyanamid Company: *See—*
  Allen, George Rodger, Jr.; Hanifin, John William, Jr.; Moran, Daniel Bryan; and Albright, Jay Donald, 4,062,958, Cl. 424-250.000.
  Behrens, Rudolf Adolf, 4,062,797, Cl. 252-182.000.
  Conrow, Ransom Brown; Bernstein, Seymour; and Bauman, Norman, 4,062,837, Cl. 260-175.000.
  Los, Marinus, 4,062,671, Cl. 71-92.000.
  Spicer, Larry Dean; Pensack, Joseph Michael; Wilbur, Robert Daniel; and Demkovich, Gary Michael, 4,062,856, Cl. 260-295.50B.
American Home Products Corporation: *See—*
  Strike, Donald P., 4,062,783, Cl. 260-514.00D.

American Hydrocarbon Company: *See*—
Applegate, James M.; Holbrook, Stanford T.; Proell, Wayne A.; and Selin, Clifford E., 4,062,928, Cl. 423-392.000.
American Optical Corporation: *See*—
Gee, Alan E., 4,063,091, Cl. 250-310.000.
Winthrop, John Talley, 4,062,629, Cl. 351-169.000.
American Standard Inc.: *See*—
Schuman, Mark, 4,063,094, Cl. 250-338.000.
American Zettler, Inc.: *See*—
Rueb, Gunter, 4,062,469, Cl. 220-268.000.
Ames Company: *See*—
Frahm, Bradley K.; and Watson, William E., 4,062,384, Cl. 141-46.000.
AMF Incorporated: *See*—
Galantine, Raymond M.; and Brown, Bruce G., 4,062,716, Cl. 156-361.000.
Ammons, Vernon G.: *See*—
Chang, Wen-Hsuan; and Ammons, Vernon G., 4,062,887, Cl. 560-185.000.
AMP Incorporated: *See*—
Doty, Donald Judson; and Reavis, Robert Philmore, Jr., 4,062,610, Cl. 339-75.00M.
Hammond, James Woodrow; and Shughart, Mervin Leonard, 4,062,106, Cl. 29-628.000.
Shaffer, Howard Richard; and Zimmerman, John Aaron, Jr., 4,062,616, Cl. 339-99.00R.
Amstad, John H. Continuous peeling method. 4,062,985, Cl. 426-483.000.
Amstar Corporation: *See*—
Blanchard, Paul H., 4,062,728, Cl. 195-31.00R.
Ancase S.A.: *See*—
Segundo, Mariano; Auerbach, Rodolfo; and Castellazzo, Rolando Antonio Juan, 4,062,204, Cl. 66-196.000.
Andersen, Leonard M. Exothermic welding device. 4,062,485, Cl. 228-56.000.
Anderson, Charles Hammond: *See*—
Sabisky, Edward Stephen; and Anderson, Charles Hammond, 4,063,158, Cl. 324-224.000.
Anderson, Elvin L.; Mendelson, Wilford L.; and Wellman, George R., to SK&F Lab Co. Process for preparing 4-(hydroxymethyl)imidazole compounds. 4,063,023, Cl. 548-342.000.
Anderson, Leif P. R.; and Serneblad, Lars Gunnar. Shutter device. 4,062,394, Cl. 160-172.000.
Anderson, Robert J., to Beckman Instruments, Inc. Photodosimeter film badge. 4,062,713, Cl. 156-256.000.
Anderson, Wallace E.; Krall, Albert D.; Syeles, Albert M.; and Vansant, Oscar J., to United States of America, Navy. Conformal radar antenna. 4,063,243, Cl. 343-100.0SA.
Ando, Toshio: *See*—
Tashiro, Joji; Kawanabe, Tadahiko; Araki, Noboru; Ashihara, Kazuo; Ando, Toshio; Hiragi, Sadayuki; Itoh, Kazuo; Ozawa, Yukio; Odera, Eiichi; and Inoue, Kosuke, 4,063,043, Cl. 179-18.0EA.
Ando, Yoshikazu; and Yokozato, Junichi, to Zenza Bronica Industries, Inc. Means for mounting an interchangeable lens on a single lens reflex camera. 4,063,264, Cl. 354-286.000.
Andrea, Christo, to Combustion Engineering, Inc. Core access system for nuclear reactor. 4,062,723, Cl. 176-30.000.
Andreadakis, Nicholas Cleanthis: *See*—
Mayer, William Norman; Kirchner, Richard Karl; and Andreadakis, Nicholas Cleanthis, 4,063,231, Cl. 340-324.00M.
Andrianov, Kuzma Andrianovich; Topchiashvili, Mikhail Izmailovich; Khananashvili, Lotary Mikhailovich; Danilov, Alexei Vladimirovich; Ryabtsev, Evgeny Ivanovich; Pagava, Dali Georgievna; Bodzhgua, Dzhimsher Shalvovich; Grigoriev, Veniamin Demyanovich; and Fridland, Vladimir Mikhailovich. Semiconductor material. 4,062,813, Cl. 252-511.000.
Andrus, Paul G.; and Hardenbrook, James M., to Xerox Corporation. D. C. electrometer. 4,063,154, Cl. 324-32.000.
ANIC, S.p.A.: *See*—
Bianchi, Renzo; and Clerici, Mario Gabriele, 4,062,803, Cl. 252-429.00B.
Cipriani, Gioacchino; and Neri, Carlo, 4,063,021, Cl. 548-317.000.
Romano, Ugo; and Melis, Ugo, 4,062,884, Cl. 260-463.000.
Ankeaman, Thomas Wayne; and Yatcilla, George, to Hesston Corporation. Brake for tying needles of crop baler. 4,062,280, Cl. 100-19.00A.
Antosz, Frederick J.; Haak, Willard J.; and Wovcha, Merle G., to Upjohn Company, The. 9α-Hydroxy-bis-nor-cholanic acid. 4,062,880, Cl. 260-397.100.
Aoki, Eiichiro: *See*—
Yamaga, Eiichi; and Aoki, Eiichiro, 4,062,263, Cl. 84-1.030.
Aoki, Susumu: *See*—
Fujiwara, Kazushi; Asai, Mituyuki; and Aoki, Susumu, 4,063,203, Cl. 335-154.000.
Aoki, Teruaki: *See*—
Matsushita, Takeshi; Hayashi, Hisao; Aoki, Teruaki; and Mochizuki, Hidenobu, 4,063,275, Cl. 357-54.000.
Mochizuki, Hidenobu; Aoki, Teruaki; Matsushita, Takeshi; Hayashi, Hisao; and Okayama, Masanori, 4,062,707, Cl. 148-187.000.
Aonuma, Masashi; Ogawa, Hiroshi; and Tamai, Yasuo, to Fuji Photo Film Co., Ltd. Process for production of ferromagnetic powder. 4,063,000, Cl. 428-403.000.
Apex Packaging Co. (Swansea) Limited: *See*—
Evans, Donald H., 4,062,556, Cl. 280-79.200.
Appel, Wolfgang; Bjarsch, Otto; and Heimdorfer, Horst, to Bosch-Siemens Hausgerate GmbH. Grill appliance. 4,062,275, Cl. 99-393.000.
Appelman, Dudley Ralph; Link, David Allen; and Stout, Gerald Louret, to Indiana University Foundation. Device for visually displaying the auditory content of the human voice. 4,063,035, Cl. 179-1.0SP.
Appelt, Guenter, to Siemens Aktiengesellschaft. Rotating anode for X-ray tubes. 4,063,124, Cl. 313-60.000.
Applegate, James M.; Holbrook, Stanford T.; Proell, Wayne A.; and Selin, Clifford E., to American Hydrocarbon Company. Process for the preparation of nitric acid. 4,062,928, Cl. 423-392.000.
Appleman, Milo Don: *See*—
De Santis, Stanislao A., 4,062,988, Cl. 426-656.000.
Application Dynamics, Inc.: *See*—
Kemp, Dennis E., Jr.; and Wright, Walter Olden, 4,062,497, Cl. 241-34.000.
Kemp, Dennis E., Jr., 4,062,549, Cl. 277-12.000.
Aqua-Craft, Inc.: *See*—
McNair, Rhett, 4,062,289, Cl. 102-48.000.
Arai, Juichiro: *See*—
Yasujima, Nobuo; Itokawa, Natsuo; and Arai, Juichiro, 4,063,211, Cl. 338-308.000.
Araki, Kunio: *See*—
Hagiwara, Miyuki; Sohara, Masayoshi; Araki, Kunio; and Kagiya, Tsutomu, 4,062,998, Cl. 428-380.000.
Araki, Noboru: *See*—
Tashiro, Joji; Kawanabe, Tadahiko; Araki, Noboru; Ashihara, Kazuo; Ando, Toshio; Hiragi, Sadayuki; Itoh, Kazuo; Ozawa, Yukio; Odera, Eiichi; and Inoue, Kosuke, 4,063,043, Cl. 179-18.0EA.
Araragi, Muneki: *See*—
Ohte, Akira; Iwaoka, Hideto; and Araragi, Muneki, 4,063,150, Cl. 324-.50R.
Argus Chemical Corporation: *See*—
Friedman, Ronald L.; and Lewis, Roger N., 4,063,013, Cl. 526-227.000.
Armbruster, Joseph M. Sawhorse with guide for circular saw. 4,062,423, Cl. 182-129.000.
Armour Pharmaceutical Company: *See*—
Hughes, John Lawrence; Seyler, Jay Kenneth; and Liu, Robert Chung-Huang, 4,062,815, Cl. 260-8.000.
Armstrong Cork Company: *See*—
Nicklaus, David F.; Ollinger, James C.; and Petrie, Thomas M., 4,062,162, Cl. 52-481.000.
Ollinger, James C., 4,062,163, Cl. 52-481.000.
Armstrong, Lee R.: *See*—
Mercik, Henry J., Jr.; and Armstrong, Lee R., 4,062,231, Cl. 73-116.000.
Armstrong, William Eddie, to Western Digital Corporation. Method for fabricating diffusion self-aligned short channel MOS device. 4,062,699, Cl. 148-1.500.
Arn, Robert M.; and Waszek, Glen F. Incandescent, flat screen, video display. 4,063,234, Cl. 340-334.000.
Arnold, William O., to Union Insulating Company. Clamp for securing bar hanger to electrical wiring box. 4,062,512, Cl. 248-309.00R.
Arnott, Gertrude V. Fabric cutting tool. 4,062,116, Cl. 30-292.000.
Arthur, Jett C., Jr.: *See*—
Mod, Robert R.; Harris, James A.; Arthur, Jett C., Jr.; Magne, Frank C.; Sumrell, Gene; and Novak, Arthur F., 4,062,841, Cl. 260-239.0BF.
Arton, Kenneth A. M.: *See*—
Odell, Alexander D.; Young, John M.; and Arton, Kenneth A. M., 4,063,119, Cl. 307-279.000.
Asahi Glass Company Ltd.: *See*—
Suzuki, Yoshiro; Ohta, Hironori; and Shirasaka, Masuo, 4,062,689, Cl. 106-50.000.
Asahi Kogaku Kogyo Kabushiki Kaisha: *See*—
Sugiyama, Takahiro, 4,062,622, Cl. 350-214.000.
Asai, Mituyuki: *See*—
Fujiwara, Kazushi; Asai, Mituyuki; and Aoki, Susumu, 4,063,203, Cl. 335-154.000.
Ashihara, Kazuo: *See*—
Tashiro, Joji; Kawanabe, Tadahiko; Araki, Noboru; Ashihara, Kazuo; Ando, Toshio; Hiragi, Sadayuki; Itoh, Kazuo; Ozawa, Yukio; Odera, Eiichi; and Inoue, Kosuke, 4,063,043, Cl. 179-18.0EA.
Ashkin, Arthur; Jain, Ravinder Kumar; Lin, Chinlon; and Stolen, Rogers Hall, to Bell Telephone Laboratories, Incorporated. Optical fiber raman oscillator. 4,063,106, Cl. 307-88.300.
Aspiro, Inc.: *See*—
St. John, Richard C., 4,062,433, Cl. 192-104.00R.
Astheimer, Robert W.; and Falbel, Gerald, to Barnes Engineering Company. Infrared vidicon system. 4,063,093, Cl. 250-330.000.
Astro Containers, Inc.: *See*—
Mason, Lewis T., 4,062,312, Cl. 113-120.00A.
Atomic Products Corporation: *See*—
Foster, Edward Henry; and Reiss, James M., 4,062,353, Cl. 128-1.100.
Auburn International, Inc.: *See*—
Dechene, Ronald L.; Grimaldi, Frank G.; and Newton, Robert E., 4,063,153, Cl. 324-30.00R.
Audeh, Costandi A.; and Bridger, Robert F., to Mobil Oil Corporation. Reactivation of hydrofinishing catalyst for color removal activity. 4,062,763, Cl. 208-264.000.
Auerbach, Rodolfo: *See*—
Segundo, Mariano; Auerbach, Rodolfo; and Castellazzo, Rolando Antonio Juan, 4,062,204, Cl. 66-196.000.
Auger, Robert: *See*—
Purinton, Edwin C.; Holzinger, Carl S.; and Auger, Robert, 4,063,230, Cl. 340-280.000.

Ault, Earl Rema; Bradford, Robert Spencer, Jr.; Bhaumik, Mani Lal; and Floyd, Danny Doyce, to Northrop Corporation. Xenon fluoride laser utilizing nitrogen trifluoride as a fluorine donor. 4,063,191, Cl. 331-94.50G.
Ault, Earl Rema: *See*—
Bhaumik, Mani Lal; Bradford, Robert Spencer, Jr.; Ault, Earl Rema; and Stevens, Philip Clyde, 4,063,192, Cl. 331-94.50G.
Austin, Paul R., to University of Delaware. Solvents for and purification of chitin. 4,062,921, Cl. 264-233.000.
Austin, Paul R., to University of Delaware. Chitin complexes with alcohols and carbonyl compounds. 4,063,016, Cl. 536-20.000.
Automation Systems Inc.: *See*—
Bartlett, Peter G., 4,063,121, Cl. 307-311.000.
Automobiles Peugeot: *See*—
Rivere, Jean-Pierre, 4,062,337, Cl. 123-140.0MC.
Autrey, Robert C.; and Connolly, John W., to Autrey, Robert C. Waterbed mattress construction. 4,062,077, Cl. 5-365.000.
AVCO Corporation: *See*—
Duly, Alan R., 4,063,167, Cl. 324-61.00R.
Avion Australia Pty. Ltd.: *See*—
Holland, John Anthony, 4,062,074, Cl. 5-63.000.
Ayerst McKenna and Harrison Ltd.: *See*—
Pelz, Karel; Bruderlein, Francois T.; and Humber, Leslie G., 4,062,851, Cl. 260-289.00C.
Azzopardi, Charles M. Undercounter pots and pans washer. 4,062,082, Cl. 15-28.000.
B. F. Goodrich Company, The: *See*—
Stricharczuk, Paul Thomas; and Lawson, Dennis Lee, 4,062,915, Cl. 264-50.000.
Westerman, Ira John, 4,062,817, Cl. 260-17.45G.
Witenhafer, Donald Edward; Daniels, Charles Anthony; and Koebel, Ralph Francis, 4,062,925, Cl. 423-240.000.
Babcock & Wilcox Company, The: *See*—
Walling, Gary Allen, 4,062,726, Cl. 176-87.000.
Badgley, Patrick R.: *See*—
Perr, Julius P.; Schutz, Peter W.; Badgley, Patrick R.; and Valdmanis, Edgars, 4,062,230, Cl. 73-114.000.
Bahr, Dietrich Juergen; and Burckardt, Karl Heinz, to International Business Machines Corporation. Electro erosion printing head. 4,063,255, Cl. 346-139.00C.
Baker, Don R.; and Walker, Francis H., to Stauffer Chemical Company. Substituted-N-(1,1-disubstituted ethyl)-α-(substituted phenoxy)-α-alkoxyacetamides and their use as miticides. 4,062,977, Cl. 424-324.000.
Baker International Corporation: *See*—
Akkerman, Neil H.; and Ross, Richard J., 4,062,406, Cl. 166-323.000.
Baker, Robert K., to Potter Electric Signal Co. Bi-directional limit switch. 4,063,056, Cl. 200-332.000.
Ball Packaging Products, Inc.: *See*—
Zappia, Anthony T., 4,062,668, Cl. 65-229.000.
Ban, Vladimir Sinisa; and Gilbert, Stephen Lee, to RCA Corporation. Apparatus for chemical vapor deposition. 4,062,318, Cl. 118-49.000.
Barclay, Donald John; and Morgan, William Morris, to International Business Machines Corporation. Electrodeposition of chromium. 4,062,737, Cl. 204-43.00R.
Bardos, Andrew M.: *See*—
Kozma, Adam; Vander Lugt, Anthony; and Bardos, Andrew M., 4,063,226, Cl. 365-125.000.
Barnes, Arthur K.; and Stevens, H. T., to Alliance Machine Company, The. Drive trucks. 4,062,296, Cl. 105-163.00R.
Barnes Drill Co.: *See*—
Estabrook, Mark R., 4,062,780, Cl. 210-401.000.
Barnes Engineering Company: *See*—
Astheimer, Robert W.; and Falbel, Gerald, 4,063,093, Cl. 250-330.000.
Barrett, David M.; Henkes, John L., Jr.; Edelheit, Lewis S.; and Godbarsen, Robert, to General Electric Company. X-ray body scanner for computerized tomography comprising inner fluid container surrounded by outer fluid container. 4,063,097, Cl. 250-360.000.
Barron, James M.: *See*—
Rapp, Felix, Jr.; and Barron, James M., 4,062,346, Cl. 126-270.000.
Barry, Patrick J.; and Skinner, Frank R., II, to Whirlpool Corporation. Conveyor transfer apparatus hook release device. 4,062,440, Cl. 198-478.000.
Bartholomew, Allan E., to Kole Enterprises, Inc. Document filing apparatus. 4,062,452, Cl. 211-55.000.
Bartlett, Harold H., Jr.; Herr, Charles H., Jr.; Kinney, Lionel L.; Lamport, Ivan R.; and Welch, Clarence A., to Caterpillar Tractor Co. Dynamometer test stand. 4,062,234, Cl. 73-135.000.
Bartlett, Peter G., to Automation Systems Inc. Input converter. 4,063,121, Cl. 307-311.000.
Barton, Paul: *See*—
Overbury, Francis G.; and Barton, Paul, 4,063,242, Cl. 343-100.0SA.
Basaldua, Lydia Silvestry, to Lydia Design Ltd. Multi-style garment. 4,062,062, Cl. 2-105.000.
Base, Jim. Cable seal unit for earth-boring drill strings. 4,062,551, Cl. 277-102.000.
BASF Aktiengesellschaft: *See*—
Laurer, Peter Rudolf; Schroeder, Wolfgang; Hoffmann, Herwig; and Lingk, Heinz, 4,062,899, Cl. 260-635.00Y.
Schefczik, Ernst, 4,062,845, Cl. 260-256.50R.
BASF Wyandotte Corporation: *See*—
Hansen, Gregory Blair, 4,062,814, Cl. 252-529.000.
Basov, Nikolai Gennadievich; Berezhnoi, Igor Alexandrovich; Vekshin, Vyacheslav Sergeevich; Danilychev, Vladimir Alexandrovich; Elatontsev, Albert Ivanovich; Ignatiev, Vladimir Vasilievich; Karyshev, Vitaly Dmitrievich; and Togulev, Alexandr Konstantinovich. Aircraft take-off and landing system and method for using same. 4,063,218, Cl. 340-26.000.
Bauer, Hans: *See*—
Bauer, Wilhelm; and Bauer, Hans, 4,062,740, Cl. 204-51.000.
Bauer, Johann: *See*—
Manner, Erich; Adler, Klaus; Pichler, Engelbert; Bauer, Johann; and Sommer, Hans, 4,062,715, Cl. 156-334.000.
Bauer, Wilhelm; and Bauer, Hans. Bath for direct chrome-plating of calender rolls. 4,062,740, Cl. 204-51.000.
Bauman, Norman: *See*—
Conrow, Ransom Brown; Bernstein, Seymour; and Bauman, Norman, 4,062,837, Cl. 260-175.000.
Baur, Rudolf, to Swiss Aluminium Ltd. Oil-in-water emulsion for cold rolling. 4,062,784, Cl. 252-49.500.
Baxter Travenol Laboratories, Inc.: *See*—
Leonard, Ronald J., 4,062,773, Cl. 210-65.000.
Bayer Aktiengesellschaft: *See*—
Boehmke, Gunther; and Schwaebel, Richard, 4,062,643, Cl. 8-1.00A.
Brauner, Dieter; Kaluza, Hans-Joachim; and Muschelknautz, Edgar, 4,062,524, Cl. 366-340.000.
Draber, Wilfried; Buchel, Karl Heinz; Regel, Erik; and Plempel, Manfred, 4,062,959, Cl. 424-250.000.
Frommer, Werner; Junge, Bodo; Keup, Uwe; Muller, Lutz; Puls, Walter; and Schmidt, Delf, 4,062,950, Cl. 424-181.000.
Hemmerich, Heinz-Peter; Rosenkranz, Hans Jurgen; Papenroth, Wolfgang; and Klaeren, Aloys, 4,062,692, Cl. 106-300.000.
Jager, Horst; and Klauke, Erich, 4,062,875, Cl. 260-351.000.
BBC Brown Boveri & Company Limited: *See*—
Glavitsch, Hans; and Vitins, Michael, 4,063,166, Cl. 324-52.000.
Kuhnen, Gottfried, 4,063,062, Cl. 219-121.0EM.
Lanz, Otto; and Vitins, Michael, 4,063,160, Cl. 324-52.000.
Lanz, Otto; and Vitins, Michael, 4,063,162, Cl. 324-52.000.
Lanz, Otto; Mastner, Jiri; and Vitins, Michael, 4,063,164, Cl. 324-52.000.
Lanz, Otto, 4,063,165, Cl. 324-52.000.
Vitins, Michael, 4,063,163, Cl. 324-52.000.
Bean, Kenneth E.; and Lloyd, William W., to Texas Instruments Incorporated. FET and bipolar device and circuit process with maximum junction control. 4,063,271, Cl. 357-49.000.
Beckman Instruments, Inc.: *See*—
Anderson, Robert J., 4,062,713, Cl. 156-256.000.
Reeves, George I., 4,063,152, Cl. 324-16.00T.
Beecham Group Limited: *See*—
Cole, William Gwyn; Goudie, Alexander Crossan; and Rose, Carl John, 4,062,978, Cl. 424-331.000.
Watts, Eric Alfred, 4,062,870, Cl. 260-345.200.
Beekenkamp, Gerald, to Black and Decker Manufacturing Company, The. Arrangement for cutting a workpiece. 4,062,390, Cl. 144-134.00D.
Behrens, Rudolf Adolf, to American Cyanamid Company. Stabilized accelerator compositions. 4,062,797, Cl. 252-182.000.
Beisner, Klaus: *See*—
Brachthauser, Kunibert; Ramesohl, Hubert; Beisner, Klaus; and Herchenbach, Horst, 4,062,691, Cl. 106-100.000.
Bell & Howell Company: *See*—
Fleischman, Andor A., 4,062,621, Cl. 350-184.000.
Fleischman, Andor A.; and Linke, Walter R., 4,062,625, Cl. 350-202.000.
Karsh, Irving, 4,063,292, Cl. 360-60.000.
Bell Telephone Laboratories, Incorporated: *See*—
Ashkin, Arthur; Jain, Ravinder Kumar; Lin, Chinlon; and Stolen, Rogers Hall, 4,063,106, Cl. 307-88.300.
Chang, Robert Pang Heng; and Sinha, Ashok Kumar, 4,062,747, Cl. 204-164.000.
Dixon, Richard Wayne, 4,062,632, Cl. 356-72.000.
Franke, Earnest Allen, 4,063,168, Cl. 324-72.000.
Gressitt, Tillman Johnson; and O'Regan, Richard, 4,062,614, Cl. 339-97.00R.
Huryn, William Andrew, 4,063,047, Cl. 179-99.000.
Turner, Dennis Robert, 4,062,755, Cl. 204-275.000.
Bellman & Co. K.G.: *See*—
Meyer, Herbert; and Schienagel, Heinz, 4,062,140, Cl. 40-152.000.
Bender, Lloyd F., to Bender Machine Works, Inc. Easily disassembled, one-way check valve. 4,062,378, Cl. 137-535.000.
Bender Machine Works, Inc.: *See*—
Bender, Lloyd F., 4,062,378, Cl. 137-535.000.
Benedek, Eva: *See*—
Harsanyi, Kalman; Takacs, Kalman; Kiss, Pal; Szekeres, Laszlo; Papp, Gyula; and Benedek, Eva, 4,062,850, Cl. 260-286.00R.
Benn, Walter R., to G. D. Searle & Co. 23-Hydroxy-3-oxo-24-norchola-4,17(20)-dien-21-oic acid γ-lactone and intermediates thereto. 4,062,843, Cl. 260-239.55R.
Bentley, Donald J., to Bentley Laboratories, Inc. Atraumatic fluid handling method and apparatus. 4,062,360, Cl. 128-276.000.
Bentley Laboratories, Inc.: *See*—
Bentley, Donald J., 4,062,360, Cl. 128-276.000.
Bentrup, Otto Theodore, to J. I. Case Company. Fire extinguisher system using liquid-ballast tires. 4,062,407, Cl. 169-47.000.
Berdahl, C. Martin, to United States of America, National Aeronautics and Space Administration. Selective image area control of x-ray film exposure density. 4,063,092, Cl. 250-322.000.

Berezhnoi, Igor Alexandrovich: *See*—
Basov, Nikolai Gennadievich; Berezhnoi, Igor Alexandrovich; Vekshin, Vyacheslav Sergeevich; Danilychev, Vladimir Alexandrovich; Elatontsev, Albert Ivanovich; Ignatiev, Vladimir Vasilievich; Karyshev, Vitaly Dmitrievich; and Togulev, Alexandr Konstantinovich, 4,063,218, Cl. 340-26.000.
Berg, Christoph; and Stadler, Eberhard, to Sartorius-Werke GmbH. Electromagnetically compensating beamless dynamometer or weighing machine. 4,062,416, Cl. 177-210.0EM.
Bergander, Armin; and Kurz, Georg, to Licentia Patent-Verwaltungs-G.m.b.H. Small broadband antenna having polarization sensitive reflector system. 4,063,249, Cl. 343-756.000.
Berger, Sidney Ethan, to Union Carbide Corporation. Dry liquid alumina trihydrate concentrates. 4,062,693, Cl. 106-308.00Q.
Bernatt, Joseph, to S & C Electric Company. Fuse housing end caps secured by magnetic pulse forming. 4,063,208, Cl. 337-248.000.
Bernhardt, Anthony F., to United States of America, Energy Research and Development Administration. Method for isotope separation by photodeflection. 4,063,090, Cl. 250-284.000.
Bernstein, Jack: *See*—
Hoehn, Hans; Bernstein, Jack; and Vogt, B. Richard, 4,062,858, Cl. 260-296.00P.
Bernstein, Seymour: *See*—
Conrow, Ransom Brown; Bernstein, Seymour; and Bauman, Norman, 4,062,837, Cl. 260-175.000.
Bertolacini, Ralph J.; and Koca, Robert M., to Standard Oil Company (Indiana). Carbon monoxide treatment of a phosphorus-vanadium-zinc oxygen catalyst. 4,062,802, Cl. 252-435.000.
Bertrand, Marcel J., to Uniroyal AG. Pneumatic tire. 4,062,393, Cl. 152-361.00R.
Besendruch-Hofmann Inc.: *See*—
Hinojosa, Carlos R., 4,062,774, Cl. 210-94.000.
Bessett, Richard A.: *See*—
Proud, Joseph M.; Bessett, Richard A.; and McNeill, William H., 4,063,132, Cl. 315-248.000.
Besson, Yves, to Thomson-CSF. Sample-and-hold circuit for analog voltages. 4,063,182, Cl. 328-151.000.
Bethlehem Steel Corporation: *See*—
Gault, Robert H., 4,062,640, Cl. 417-415.000.
Beuther, Harold; and Montagna, Angelo A., to Gulf Research & Development Company. Residue thermal cracking process in a packed bed reactor. 4,062,757, Cl. 208-61.000.
Bevilacqua, Frank; and Humphries, Joseph Roger, to Combustion Engineering, Inc. Part length control rod. 4,062,725, Cl. 176-86.00R.
Bhaumik, Mani Lal; Bradford, Robert Spencer, Jr.; Ault, Earl Rema; and Stevens, Philip Clyde, to Northrop Corporation. Krypton fluoride excimer laser utilizing nitrogen trifluoride as a fluorine donor. 4,063,192, Cl. 331-94.50G.
Bhaumik, Mani Lal: *See*—
Ault, Earl Rema; Bradford, Robert Spencer, Jr.; Bhaumik, Mani Lal; and Floyd, Danny Doyce, 4,063,191, Cl. 331-94.50G.
Bianchi, Raymond A.: *See*—
Hyde, Michael B.; and Bianchi, Raymond A., 4,063,217, Cl. 340-70.000.
Bianchi, Renzo; and Clerici, Mario Gabriele, to ANIC, S.p.A. Method for the preparation of complexes of metals of the VIII group of the periodic table and their use as catalysts for transferring hydrogen in a heterogeneous phase. 4,062,803, Cl. 252-429.00B.
Biewer, Frank N., to Offshore Technology Corporation. Method of and mechanism for generating waves suitable for surfing. 4,062,192, Cl. 61-1.00R.
Biggs, Candice B.; Pyke, Thomas R.; and Wovcha, Merle G., to Upjohn Company, The. Microbial transformation of steroids. 4,062,729, Cl. 195-51.00S.
Bijl, Geert J. M.: *See*—
van Acker, Eduard M. A. A. J.; and Bijl, Geert J. M., 4,062,908, Cl. 260-885.000.
Billerbeck, Fred W.; Everett, Lawrence H.; McGowan, Patrick G.; and Pettinga, Paul V., to Gerber Products Company. Method for preparing sweetened, storage stable, chunky peanut spread and product thereof. 4,062,986, Cl. 426-633.000.
Billings Energy Corporation: *See*—
Billings, Roger Evan, 4,062,330, Cl. 123-44.00R.
Billings, Roger Evan, to Billings Energy Corporation. Rotary engine intake and exhaust system. 4,062,330, Cl. 123-44.00R.
Birdwell, J. C., to Midcon Pipeline Equipment Co. Adjustable rollers for positioning pipe. 4,062,456, Cl. 214-1.00P.
Birnbreier, Hermann, to Brown, Boveri & Cie Aktiengesellschaft. Method for the controlled heating of a liquid reservoir, and reservoir system for carrying out the method. 4,062,349, Cl. 126-271.000.
Bjarsch, Otto: *See*—
Appel, Wolfgang; Bjarsch, Otto; and Heimdorfer, Horst, 4,062,275, Cl. 99-393.000.
Bjorklund, Curt Arnold. Valve with draw back after closing. 4,062,480, Cl. 222-571.000.
Bjorklund, Fritz Rune: *See*—
Miller, Arvo Ivar; and Bjorklund, Fritz Rune, 4,062,913, Cl. 264-24.000.
Black and Decker Manufacturing Company, The: *See*—
Beekenkamp, Gerald, 4,062,390, Cl. 144-134.00D.
Black, Neville R.: *See*—
Allen, Shelby A.; and Black, Neville R., 4,062,314, Cl. 116-85.000.
Blackburn, Richard D.: *See*—
Fehlmann, Hans R.; and Blackburn, Richard D., 4,063,148, Cl. 323-43.50S.
Blackman, Maurice V.; and Jenner, Michael D., to U.S. Philips Corporation. Method of manufacturing infra-red detector. 4,062,107, Cl. 29-628.000.
Blakely Industries: *See*—
Blakely, James T., 4,062,381, Cl. 139-224.00A.
Blakely, James T., to Blakely Industries. Repair part for magazine tip guide of loom winder. 4,062,381, Cl. 139-224.00A.
Blakeslee, A. Eugene; and Hovel, Harold John, to International Business Machines Corporation. Photoelectrical converter. 4,062,698, Cl. 136-89.0PC.
Blanchard, Paul H., to Amstar Corporation. Starch thinning process. 4,062,728, Cl. 195-31.00R.
Blanquet, Georg V., to Gaggenau- Werke, Haus- und Lufttechnik GmbH. Closet seat fitted with a valve controlled douche. 4,062,071, Cl. 4-7.000.
Blaser, Don E.; and Worley, Arthur C., to Exxon Research and Engineering Company. Fluidized bed apparatus. 4,062,656, Cl. 48-73.000.
Blaser, Don E., to Exxon Research and Engineering Company. Dry fines recycle in a coking process. 4,062,760, Cl. 208-127.000.
Bledsoe, Woodrow W. Cotton drying apparatus. 4,062,128, Cl. 34-57.00R.
Blendax-Werke R. Schneider GmbH & Co.: *See*—
Schodel, Christian, 4,062,793, Cl. 252-99.000.
Bliss, Robert A., to Hoerner Waldorf Corporation. Carton closure. 4,062,487, Cl. 229-52.00B.
Blok, Arie. Sludge concentrator and conditioner. 4,062,776, Cl. 210-205.000.
Bloom, Bernard; and Lev, Benjamin, to Midway Cap Company. Cap cover connectors. 4,062,063, Cl. 2-187.000.
Bloom, Stanley M., to Polaroid Corporation. Metal 1,2 dithiolene thiophene derivatives. 4,062,867, Cl. 260-329.0ME.
Boah, John K.; and Kennedy, Richard W., to General Electric Company. Semiconductor device and method of manufacture thereof. 4,063,272, Cl. 357-50.000.
Board of Supervisors Louisiana State University A & M: *See*—
Lindberg, George D., 4,062,943, Cl. 424-115.000.
Bobo, Gerald E., to United States of America, Energy Research and Development Administration. Compact gate valve. 4,062,515, Cl. 251-167.000.
Bodzhgua, Dzhimsher Shalvovich: *See*—
Andrianov, Kuzma Andrianovich; Topchiashvili, Mikhail Izmailovich; Khananashvili, Lotary Mikhailovich; Danilov, Alexei Vladimirovich; Ryabtsev, Evgeny Ivanovich; Pagava, Dali Georgievna; Bodzhgua, Dzhimsher Shalvovich; Grigoriev, Veniamin Demyanovich; and Fridland, Vladimir Mikhailovich, 4,062,813, Cl. 252-511.000.
Boehmke, Gunther; and Schwaebel, Richard, to Bayer Aktiengesellschaft. Printing process assisted by alkanols of 5 to 8 carbon atoms, urea and mineral oil. 4,062,643, Cl. 8-1.00A.
Boehringer Ingelheim GmbH: *See*—
Nickl, Josef; Narr, Berthold; Muller, Erich; Roch, Josef; and Haarmann, Walter, 4,062,973, Cl. 424-308.000.
Boggs, David R.: *See*—
Metcalfe, Robert M.; Boggs, David R.; Thacker, Charles P.; and Lampson, Butler W., 4,063,220, Cl. 340-147.0LP.
Bogue, John C.: *See*—
Willcocks, Martin Edmund George, 4,063,032, Cl. 179-1.0GQ.
Bolen, Lawrence A. Walking cane. 4,062,371, Cl. 135-66.000.
Boller, Arthur; Cereghetti, Marco; and Scherrer, Hanspeter, to Hoffmann-La Roche Inc. Phenylpyrimidine derivatives. 4,062,798, Cl. 252-299.000.
Bollhagen, Heins: *See*—
Nier, Johannes; Bollhagen, Heins; and Wocher, Berthold, 4,063,237, Cl. 343-7.0VM.
Bongert, Wilhelm: *See*—
Pfeiffer, Roland; Bongert, Wilhelm; and Waldhecker, Heinz-Dieter, 4,062,127, Cl. 34-1.000.
Bongiovanni, John P. Fuel storage tank insulating system. 4,062,468, Cl. 220-9.00A.
Bonner, Cletus D., to Strayer Coin Bag Company, Inc. Lock mounting for zippered security bag. 4,062,207, Cl. 70-68.000.
Bonner, Francis J., Jr. Catheter. 4,062,363, Cl. 128-349.00R.
Bonomo, Melvin. Dynamometer. 4,062,233, Cl. 73-135.000.
Borg-Warner Corporation: *See*—
Nibert, Roger Keith, 4,062,785, Cl. 252-49.600.
Borkowski, Lawrence E.: *See*—
Dupre, George T.; DeMarco, Thomas M.; Borkowski, Lawrence E.; and Waliczek, Harvey, 4,062,664, Cl. 55-319.000.
Bosch-Siemens Hausgerate GmbH: *See*—
Appel, Wolfgang; Bjarsch, Otto; and Heimdorfer, Horst, 4,062,275, Cl. 99-393.000.
Boteler, William C., to Slater Electric Inc. Electrical outlet box mounting assembly. 4,062,470, Cl. 220-3.300.
Bouffenie, Jacques; Campargue, Roger; and Recule, Albert, to Commissariat a l'Energie Atomique. Furnace for heating a circulating gas stream especially for producing molecular jets. 4,063,067, Cl. 219-374.000.
Box, E. O., Jr.; and Farha, Floyd, Jr., to Phillips Petroleum Company. Polluted water purification. 4,062,772, Cl. 210-63.00R.
Boyeson, Eyvind, to Performance Industries, Inc. Two cycle internal combustion engine. 4,062,331, Cl. 123-73.00B.
Boyle, William J., Jr.: *See*—
Sifniades, Stylianos; and Boyle, William J., Jr., 4,062,839, Cl. 260-239.30R.
Brachthauser, Kunibert; Ramesohl, Hubert; Beisner, Klaus; and Herchenbach, Horst, to Klockner-Humboldt-Deutz Aktiengesellschaft.

Method for the thermal treatment of finely granular material, particularly for the calcining of cement. 4,062,691, Cl. 106-100.000.
Bradford, Robert Spencer, Jr.: *See*—
Ault, Earl Rema; Bradford, Robert Spencer, Jr.; Bhaumik, Mani Lal; and Floyd, Danny Doyce, 4,063,191, Cl. 331-94.50G.
Bhaumik, Mani Lal; Bradford, Robert Spencer, Jr.; Ault, Earl Rema; and Stevens, Philip Clyde, 4,063,192, Cl. 331-94.50G.
Braitinger, Helmut: *See*—
Schneider, Franz; and Braitinger, Helmut, 4,062,213, Cl. 72-24.000.
Brand, Derek A.; Terzian, Rouben T.; and Montague, Douglas P., to Marvin Glass & Associates. Ice dispenser with rotatable supply container. 4,062,476, Cl. 222-131.000.
Brauner, Dieter; Kaluza, Hans-Joachim; and Muschelknautz, Edgar, to Bayer Aktiengesellschaft. Apparatus for the static mixing of fluid streams. 4,062,524, Cl. 366-340.000.
Brdr. Schur International A.S.: *See*—
Lister, Edward Alan; and Clarke, Graham Wilson, 4,062.169, Cl. 53-124.00D.
Breeden, Michael D.: *See*—
Gant, Gary L.; Breeden, Michael D.; Sting, James A.; and Smith, Edward D., 4,062,336, Cl. 123-139.0AF.
Breil, Heinz: *See*—
Ziegler, Karl, deceased; Breil, Heinz; Holzkamp, Erhard; and Martin, Heinz, 4,063,009, Cl. 526-159.000.
Brendley, William H., Jr.: *See*—
Haag, Thomas M.; Brendley, William H., Jr.; and Martorano, Richard, 4,062,821, Cl. 260-29.4UA.
Breuer, Hermann; and Treuner, Uwe D., to E. R. Squibb & Sons, Inc. [[[(2,4-Dioxo-1-imidazolidinyl)amino]carbonyl]amino]-acylcephalosporin derivatives. 4,063,019, Cl. 544-27.000.
Brewer, William E.; and Zimmer, Franklin V., to K-Krete, Inc. Method of bedding a conduit using controlled density fill material. 4,062,195, Cl. 61-72.400.
Brickner, George; and Budoff, Paul P. Umbrella cover. 4,062,370, Cl. 135-33.00C.
Bridgeford, Douglas J., to Teepak, Inc. Humidifying and shirring artificial sausage casing. 4,062,981, Cl. 426-278.000.
Bridger, Robert F.: *See*—
Audeh, Costandi A.; and Bridger, Robert F., 4,062,763, Cl. 208-264.000.
Bridgestone Tire Company, Ltd.: *See*—
Watabe, Yoji; Ishii, Michio; and Iseda, Yutaka, 4,062,825, Cl. 260-37.00N.
Brigante, Paul J. Window shade hanging device. 4,062,483, Cl. 227-147.000.
Bright, Clark I.: *See*—
Snyder, Jan S.; and Bright, Clark I., 4,063,222, Cl. 365-126.000.
Brihier, Gerard Charles Camille, to Facom. Machine for balancing vehicle wheels. 4,062,242, Cl. 73-462.000.
Bringen, David O.: *See*—
Guyer, Vernon L.; and Bringen, David O., 4,062,721, Cl. 162-101.000.
Bristol, James A.: *See*—
Yale, Harry L.; and Bristol, James A., 4,062,852, Cl. 260-293.550.
Bristol-Myers Company: *See*—
Gary, Herbert H.; and Shin, Chung T., 4,062,938, Cl. 424-47.000.
British Petroleum Company Limited, The: *See*—
Hargrove, John David; and Stevens, Geoffrey Charles, 4,062,811, Cl. 252-462.000.
British Steel Corporation: *See*—
Hawkes, David A.; Uemlianin, Andray; and Lubanska, Hope, 4,062,674, Cl. 75-61.000.
Broadley, Donald, to United Kingdom Atomic Energy Authority. Nuclear core debris collecting tray. 4,062,724, Cl. 176-38.000.
Brochu, Edward. Nursing bottle holder. 4,062,510, Cl. 248-102.000.
Brockbank, William Hughes, to Business Controls, Inc. Artificial fire place logs which burn with colored flame and process for making same. 4,062,655, Cl. 44-6.000.
Brois, Stanley J.; and Gutierrez, Antonio, to Exxon Research and Engineering Company. Lactone oxazolines as oleaginous additives. 4,062,786, Cl. 252-51.50R.
Brolund, Theodore F.; Rolland, Burton A.; and Pauley, Merle R., to W. A. Whitney Corporation. Punch press with cutting torch. 4,063,059, Cl. 219-68.000.
Brotzmann, Karl: *See*—
Knuppel, Helmut; Brotzmann, Karl; and Fassbinder, Hans-Georg, 4,062,657, Cl. 45-77.000.
Brown, Boveri & Cie Aktiengesellschaft: *See*—
Birnbreier, Hermann, 4,062,349, Cl. 126-271.000.
Brown, Bruce G.: *See*—
Galantine, Raymond M.; and Brown, Bruce G., 4,062,716, Cl. 156-361.000.
Brown, John V.: *See*—
Ebbert, Robert J.; and Brown, John V., 4,062,217, Cl. 72-391.000.
Brown, Marshall M., to Craig Corporation. Channel selector for a scanning monitor receiver. 4,063,179, Cl. 325-470.000.
Brown, Ralph Auldon; and Meinelt, Kenneth Harold, to Sperry Rand Corporation. Telescoping linkage for helicopter sight. 4,062,247, Cl. 74-89.000.
Brown & Williamson Tobacco Corporation: *See*—
Crellin, Robin Arthur; Jenkins, Christopher Robert; and Phelpstead, James William Percy, 4,062,368, Cl. 131-265.000.
Broxholm, Anne K., administratrix: *See*—
Elmore, Lester; Broxholm, Thomas M., deceased; and Broxholm, Anne K., administratrix, 4,062,266, Cl. 89-7.000.
Broxholm, Thomas M., deceased: *See*—
Elmore, Lester; Broxholm, Thomas M., deceased; and Broxholm, Anne K., administratrix, 4,062,266, Cl. 89-7.000.
Bruce Plastics, Inc.: *See*—
Szabo, Bela G., 4,062,479, Cl. 222-495.000.
Bruderlein, Francois T.: *See*—
Pelz, Karel; Bruderlein, Francois T.; and Humber, Leslie G., 4,062,851, Cl. 260-289.00C.
Brugman, Hans, to Brugman Machinefabriek B.V. Guide roller and a method of manufacturing such a roller. 4,062,098, Cl. 29-123.000.
Brugman Machinefabriek B.V.: *See*—
Brugman, Hans, 4,062,098, Cl. 29-123.000.
Brunswick Corporation: *See*—
Lew, Sandy Y.; and Conley, Edward F., 4,062,872, Cl. 260-346.400.
Brutschy, John J. Hand drill and adapter tool. 4,062,078, Cl. 7-1.00R.
Brzoskowski, Zbigniew: *See*—
Zawadzki, Bohdan; Bulinska, Anna; Szulc, Zenon; Lonski, Ryszard; and Brzoskowski, Zbigniew, 4,062,930, Cl. 423-483.000.
Buchel, Karl Heinz: *See*—
Draber, Wilfried; Buchel, Karl Heinz; Regel, Erik; and Plempel, Manfred, 4,062,959, Cl. 424-250.000.
Buchheit, Robert F., to Xerox Corporation. D.C. Electrometer probe. 4,063,155, Cl. 324-32.000.
Budoff, Paul P.: *See*—
Brickner, George; and Budoff, Paul P., 4,062,370, Cl. 135-33.00C.
Bulinska, Anna: *See*—
Zawadzki, Bohdan; Bulinska, Anna; Szulc, Zenon; Lonski, Ryszard; and Brzoskowski, Zbigniew, 4,062,930, Cl. 423-483.000.
Bulten-Kanthal AB: *See*—
Lejdegard, Sixten H., 4,062,389, Cl. 144-32.00R.
Bumm, Margaret W.: *See*—
Srinivasan, Vadake R.; Fleenor, Marvin B.; Summers, Richard J.; and Bumm, Margaret W., 4,062,727, Cl. 195-28.00R.
Burcher, Ernest E.: *See*—
Keafer, Lloyd S., Jr.; Burcher, Ernest E.; and Kopia, Leonard P., 4,062,996, Cl. 428-334.000.
Burckardt, Karl Heinz: *See*—
Bahr, Dietrich Juergen; and Burckardt, Karl Heinz, 4,063,255, Cl. 346-139.00C.
Burdett, Kenneth A.: *See*—
Van Eyck, Michael J.; and Burdett, Kenneth A., 4,062,833, Cl. 260-77.5AT.
Burke, Noel I.: *See*—
Wilson, John R.; and Burke, Noel I., 4,062,980, Cl. 426-278.000.
Burkhart, Ernest C., to Northwestern Technology, Inc. Tape cartridge loading mechanism. 4,063,294, Cl. 360-92.000.
Burlington Industries, Inc.: *See*—
Hill, Thomas B.; and Tomasino, Charles, 4,062,917, Cl. 264-102.000.
Burn, Derek; and Coles, Richard J., to Glaxo Laboratories Limited. Analgesic basic naphthalene derivatives. 4,062,955, Cl. 424-248.560.
Burnett, Frank: *See*—
Polsky, Norman; Burnett, Frank; Gerner, James L.; Heying, Norman J.; and Lieberman, Edgar M., 4,062,590, Cl. 297-455.000.
Burnham, Robert D.: *See*—
Scifres, Donald R.; Burnham, Robert D.; and Streifer, William, 4,063,189, Cl. 331-94.50H.
Burns, Roger D.: *See*—
Kammerer, Leo P.; Fabian, Gordon R.; and Burns, Roger D., 4,063,140, Cl. 318-561.000.
Burroughs Corporation: *See*—
Dishaw, James; and Krause, Thomas R., 4,063,219, Cl. 340-146.3MA.
Burst, Hermann: *See*—
Hensler, Paul; and Burst, Hermann, 4,062,566, Cl. 280-751.000.
Burton, Vance P.; and Mikulicz, Michael Z., to VOP Inc. Catalyst regeneration method. 4,062,801, Cl. 252-414.000.
Busch, Norbert: *See*—
Mauvernay, Roland Yves; Busch, Norbert; Moleyre, Jacques; Simond, Jacques; and Monteil, Andre, 4,062,956, Cl. 424-248.570.
Business Controls, Inc.: *See*—
Brockbank, William Hughes, 4,062,655, Cl. 44-6.000.
Butler, James Francis. Thin film electrochemical electrode and cell. 4,062,750, Cl. 204-195.00P.
Butterfield, Max E.; and Alt, Robert M., Sr., to Caterpillar Tractor Co. Door holding apparatus. 4,062,577, Cl. 292-262.000.
Buvet, Rene; Vallot, Roger; Messina, Richard; Gal, Jacques; and Yu, Liang-Tse, to Agence Nationale de Valorisation de la Recherche (ANVAR). Polyconjugated oxidation-reduction polymers, processes for the electro-chemical regeneration of. 4,062,745, Cl. 204-131.000.
Byrne, John Frank, to Xerox Corporation. Composition and method for repairing selenium photoreceptors. 4,062,658, Cl. 51-281.00R.
Byrnes, Francis R., to Center Compression Lock Company. Tamper proof lock. 4,062,375, Cl. 137-296.000.
C. G. DORIS (Compagnie Generale pour les Developments Operationels des Richesses Sous-marines): *See*—
Lamy, Jacques Edouard, 4,062,198, Cl. 61-112.000.
C.G.R.-MeV: *See*—
Tran, Duc Tien; Kervizic, Jacques; and Hurt, Bernard, 4,063,125, Cl. 313-62.000.
C. van der Lely N. V.: *See*—
Mulder, Herman, 4,062,173, Cl. 56-370.000.
Cabot Corporation: *See*—
Dreyer, Dennis G.; Foley, Edward M.; and Rogers, Herbert E., Jr., 4,062,678, Cl. 75-228.000.
Cadiou, Jean, to Societe Anonyme Automobiles Citroen. Method and

control device for the series and parallel coupling of elements of an electrochemical generator supplying a motor. 4,063,136, Cl. 318-139.000.
Calentine, Danny D. Bowling ball control device. 4,062,540, Cl. 273-54.00B.
Campargue, Roger: *See—*
Bouffenie, Jacques; Campargue, Roger; and Recule, Albert, 4,063,067, Cl. 219-374.000.
Campbell, Clarence Clayton; and Finfinger, Dean Almon, to Hercules Incorporated. Alpha methyl styrene and vinyl toluene and processes of preparation. 4,063,011, Cl. 526-194.000.
Campbell Soup Company: *See—*
Hildebolt, William M., 4,062,987, Cl. 426-641.000.
Campbell, Willis R.: *See—*
Grube, Lowell R.; and Campbell, Willis R., 4,062,279, Cl. 100-5.000.
Canadian Patents and Development Ltd: *See—*
Kunst, Branko; and Sourirajan, Srinivasa, 4,062,782, Cl. 210-500.00M.
Canarco Incorporated: *See—*
Duesling, Clarence Lehi, 4,062,766, Cl. 209-211.000.
Canon Kabushiki Kaisha: *See—*
Hirata, Osamu, 4,063,054, Cl. 200-159.00R.
Mashimo, Yukio; Uchiyama, Takashi; and Sorimachi, Kanehiro, 4,063,257, Cl. 354-31.000.
Suzuki, Akiyoshi; and Totsuka, Maso, 4,062,623, Cl. 350-91.000.
Carlsen, Walter Norman. Disposable clinical thermometer probe. 4,062,104, Cl. 29-592.00R.
Carlson, Elmer V.; and Killion, Mead C., to Industrial Research Products, Inc. Acoustic transducer with improved electret assembly. 4,063,050, Cl. 179-111.00E.
Carlsson, Jan-Olov; Johansson, Ernst Elof Ake; and Pahlen, Lars Christer, to Telefonaktiebolaget L M Ericsson. Connector system for a race equipment. 4,062,611, Cl. 339-17.00M.
Carter, Jared E., to Dayco Corporation. Display device. 4,062,450, Cl. 206-485.000.
Cashdollar, Robert E., Sr. Protection against oxidation of molten metal streams in continuous casting. 4,062,397, Cl. 164-415.000.
Cassano, James R.: *See—*
Stange, Klaus K.; Smith, Richard E.; Hamlin, Thomas J.; and Cassano, James R., 4,062,538, Cl. 271-243.000.
Castagnos, Leonce F., Jr.; and Pratt, Roy E., to Texaco Inc. Fluidized catalytic cracking regeneration process. 4,062,759, Cl. 208-113.000.
Castaneda, Victor F.; and Davis, Homer L. Inhibited fluorocarbon rocket propellant. 4,062,709, Cl. 149-19.300.
Castellazzo, Rolando Antonio Juan: *See—*
Segundo, Mariano; Auerbach, Rodolfo; and Castellazzo, Rolando Antonio Juan, 4,062,204, Cl. 66-196.000.
Caterpillar Tractor Co.: *See—*
Bartlett, Harold H., Jr.; Herr, Charles H., Jr.; Kinney, Lionel L.; Lamport, Ivan R.; and Welch, Clarence A., 4,062,234, Cl. 73-135.000.
Butterfield, Max E.; and Alt, Robert M., Sr., 4,062,577, Cl. 292-262.000.
Hyde, Michael B.; and Bianchi, Raymond A., 4,063,217, Cl. 340-70.000.
Stedman, Robert N., 4,062,420, Cl. 180-89.100.
Cathey, Wade Thomas; and Smith, Burton Jordon. Data communication system using light coupled interfaces. 4,063,083, Cl. 250-199.000.
Ceccato, Giovanni; Moggi, Giovanni; and Geri, Sergio, to Montedison S.p.A. Vulcanizable compositions based on elastomeric copolymers of vinylidene fluoride, process for vulcanization thereof utilizing phosphorous metal coordination complex and vulcanized compositions obtained thereby. 4,062,830, Cl. 260-47.0UP.
Cega, Inc.: *See—*
Peterson, Christian C., 4,063,227, Cl. 340-237.00S.
Celmer, Walter D.; Sciavolino, Frank C.; Cullen, Walter P.; and Routien, John B., to Pfizer Inc. Mixture of antibiotics produced by new species of micromonospora. 4,062,944, Cl. 424-117.000.
Celmer, Walter D.; Cullen, Walter P.; Moppett, Charles E.; Oscarson, John R.; and Routien, John R., to Pfizer Inc. Polycyclic ether antibiotic. 4,062,945, Cl. 424-122.000.
Center Compression Lock Company: *See—*
Byrnes, Francis R., 4,062,375, Cl. 137-296.000.
Central Glass Co., Ltd.: *See—*
Hatanaka, Kyohei; Inoue, Hajime; Hisatomi, Haruya; Okuda, Koya; Suzuki, Takeshi; Murao, Mikio; and Utiyama, Susumu, 4,062,667, Cl. 65-135.000.
Centre Europeen de Recherches Mauvernay: *See—*
Mauvernay, Roland Yves; Busch, Norbert; Moleyre, Jacques; Simond, Jacques; and Monteil, Andre, 4,062,956, Cl. 424-248.570.
Cereghetti, Marco: *See—*
Boller, Arthur; Cereghetti, Marco; and Scherrer, Hanspeter, 4,062,798, Cl. 252-299.000.
Cermak, Gregory S.: *See—*
Sciaraffa, Michael A.; and Cermak, Gregory S., 4,062,874, Cl. 260-346.760.
Ceskoslovenska akademie ved: *See—*
Kopecek, Jinrich; Ulbrich, Karel; Vacik, Jiri; Strohalm, Jiri; Chytry, Vladimir; Drobnik, Jaroslav; and Kalal, Jaroslav, 4,062,831, Cl. 260-47.0UA.
CGEE Alsthom S.A.: *See—*
Debaigt, Jean, 4,062,166, Cl. 52-664.000.
Chalabian, Jack S., to K-Jack Engineering Company, Inc. Water proof coin mechanism. 4,062,435, Cl. 194-54.000.
Chambliss, Joni: *See—*
Linkow, Leonard I.; Chambliss, Joni; and Cloyd, Wallace W., 4,062,119, Cl. 32-10.00A.
Champion International Corporation: *See—*
Cottrell, Edward D., 4,062,108, Cl. 29-809.000.
Cottrell, Edward D., 4,062,438, Cl. 198-425.000.
Hartman, Seymour, 4,063,003, Cl. 428-537.000.
Chang, Clarence D.; Lang, William H.; and Silvestri, Anthony J., to Mobil Oil Corporation. Manufacture of light olefins. 4,062,905, Cl. 260-682.000.
Chang, Robert Pang Heng; and Sinha, Ashok Kumar, to Bell Telephone Laboratories, Incorporated. Native growth of semiconductor oxide layers. 4,062,747, Cl. 204-164.000.
Chang, Wen-Hsuan; and Ammons, Vernon G., to PPG Industries, Inc. Transparent, optically clear poly(lactone-urethane) interlayers for laminated safety glass. 4,062,887, Cl. 560-185.000.
Chanin, Alvin M.: *See—*
Stahl, Allen Andrew, 4,062,261, Cl. 83-414.000.
Chanin, Robert: *See—*
Stahl, Allen Andrew, 4,062,261, Cl. 83-414.000.
Chapelet, Gilbert: *See—*
Marie, Gilbert; Lang, Andre; and Chapelet, Gilbert, 4,063,010, Cl. 526-169.000.
Chaplin, Henry D., Jr.; and Wadsworth, Stuart E., to Haskell Electronics & Tool Corporation. Level winding apparatus. 4,062,503, Cl. 242-35.50R.
Chapman, Lloyd Russell; and O'Doherty, Ronan Francis, to Seiscom Delta Inc. Displaying seismic sections in isometric view. 4,063,216, Cl. 340-15.5DS.
Charbonnet, Carl D. Apparatus for handling sheets of material. 4,062,535, Cl. 271-174.000.
Chase, Willis E. Polyphonic musical instrument simulator. 4,062,264, Cl. 84-1.240.
Cheetham, Colin Jones: *See—*
Litherland, Kenneth Leslie; Maguire, Phillip; and Cheetham, Colin Jones, 4,062,690, Cl. 106-98.000.
Chemetron Corporation: *See—*
Rider, Aern E.; and Neal, Donald R., 4,063,283, Cl. 358-107.000.
Chemiebau Dr. A. Zieren Gesellschaft Mit Beschraenkter Haftung & Co. KG: *See—*
Gehrken, Hubert; and Keunecke, Gerhard, 4,062,871, Cl. 260-346.400.
Chen, Li Fu: *See—*
Tsao, George T.; and Chen, Li Fu, 4,063,017, Cl. 536-57.000.
Chen, Trevor G., to Trepege Products Inc. Door safety latch. 4,062,578, Cl. 292-262.000.
Cheung, Mo-Fung; and Dickie, Ray A., to Ford Motor Company. Hybrid water-based enamels with partially crosslinked latexes. 4,062,823, Cl. 260-29.4UA.
Cheung, Nelson, to Signode Corporation. Expanding strap loop forming and friction fusion machine. 4,062,278, Cl. 100-4.000.
Chevron Research Company: *See—*
Harrison, Jonas P., 4,062,873, Cl. 260-346.750.
Jacobson, Robert L., 4,062,903, Cl. 260-668.00A.
Lindquist, Robert H., 4,062,920, Cl. 264-153.000.
Lindquist, Robert H., 4,062,984, Cl. 426-430.000.
Chiba, Iwane: *See—*
Fujino, Yoshiharu; Chiba, Iwane; Chiyonobu, Toshimi; Takahata, Tomihisa; and Kachi, Yasuhiko, 4,063,061, Cl. 219-101.000.
Chichester, Willard L.; and Holtkamp, Donald A., to Clark Equipment Company. Hydraulic cylinder extension control. 4,062,269, Cl. 91-400.000.
Child, Robin Edward: *See—*
Sawyer, Patrick Frank; and Child, Robin Edward, 4,062,597, Cl. 303-6.00C.
Chinoin Pharmaceutical and Chemical Works Ltd.: *See—*
Harsanyi, Kalman; Takacs, Kalman; Kiss, Pal; Szekeres, Laszlo; Papp, Gyula; and Benedek, Eva, 4,062,850, Cl. 260-286.00R.
Chiyonobu, Toshimi: *See—*
Fujino, Yoshiharu; Chiba, Iwane; Chiyonobu, Toshimi; Takahata, Tomihisa; and Kachi, Yasuhiko, 4,063,061, Cl. 219-101.000.
Christison, John M., to Expanded Metal Company Limited, The. Lath having spider web-like elastomeric backing. 4,062,160, Cl. 52-445.000.
Chrysler Corporation: *See—*
La Custa, Mike, 4,062,101, Cl. 29-451.000.
Chubb, Francis L.: *See—*
Eric, Lucien; and Chubb, Francis L., 4,062,889, Cl. 260-553.00D.
Chubu-Nippon Broadcasting Co., Ltd.: *See—*
Hattori, Hajime; Okada, Tadashi; and Kezuka, Eiji, 4,063,280, Cl. 358-22.000.
Chuparov, Nikola Tomov; Pakyov, Dobri Tzvetkov; Papazov, Peter Nachev; and Savov, Tzvetan Mladenov, to VMEI "Lenin" - NIS. Hydraulic-frictional system for rotating the arm of a forging manipulator. 4,062,219, Cl. 72-422.000.
Chytry, Vladimir: *See—*
Kopecek, Jinrich; Ulbrich, Karel; Vacik, Jiri; Strohalm, Jiri; Chytry, Vladimir; Drobnik, Jaroslav; and Kalal, Jaroslav, 4,062,831, Cl. 260-47.0UA.
Ciba-Geigy Corporation: *See—*
Cseh, Georg; and Hari, Stefan, 4,062,838, Cl. 260-176.000.
Garner, Robert; and Petitpierre, Jean Claude, 4,062,866, Cl. 260-326.14R.
Liechti, Hans Wilhelm; and Reinker, Dieter, 4,062,836, Cl. 260-154.000.
Steinetz, Bernard George, Jr., 4,062,964, Cl. 424-267.000.

Cincinnati Butchers' Supply Company, The: *See—*
Cook, Frank M., 4,062,414, Cl. 177-145.000.
Cincinnati Milacron Chemicals, Inc.: *See—*
Kugele, Thomas G., 4,062,881, Cl. 260-399.000.
Cincinnati Milacron Inc.: *See—*
Jeremiah, Edward Scott; Schubeler, Kenneth Erwin; and Kline, Eric Randall, 4,063,311, Cl. 364-900.000.
Cipolli, Roberto; Pieri, Giampiero; and Paffoni, Camillo, to Montedison S.p.A. Acid dyes useful for dyeing streaked nylon. 4,062,645, Cl. 8-41.00B.
Cipriani, Gioacchino; and Neri, Carlo, to ANIC, S.p.A. Method for the synthesis of ureas. 4,063,021, Cl. 548-317.000.
Clark, Alfred James, to Motorola, Inc. Tuner pinion gear guide. 4,062,243, Cl. 74-10.800.
Clark, Earl J., to Tandy Brands, Inc. Pistol holster. 4,062,481, Cl. 224-2.00B.
Clark Equipment Company: *See—*
Chichester, Willard L.; and Holtkamp, Donald A., 4,062,269, Cl. 91-400.000.
Clark, Frederick G., to Eastman Machine Company. Sharpener mounting structure and knife guard for circular knife type of cloth cutting machine. 4,062,111, Cl. 30-139.000.
Clark, Justin S.; and Wallace, Wm. Dean. Method and apparatus for mixing gases. 4,062,373, Cl. 137-3.000.
Clarke, Graham Wilson: *See—*
Lister, Edward Alan; and Clarke, Graham Wilson, 4,062,169, Cl. 53-124.00D.
Clendenen, Ronald Lee: *See—*
Olson, Eugene E.; Clendenen, Ronald Lee; and Schlaudt, Charles McCammon, 4,062,922, Cl. 264-294.000.
Clerici, Mario Gabriele: *See—*
Bianchi, Renzo; and Clerici, Mario Gabriele, 4,062,803, Cl. 252-429.00B.
Clingman, William H., Jr., to Precision Machine Products, Inc. Method of and means for accurately measuring the calorific value of combustible gases. 4,062,236, Cl. 73-190.0CV.
Clinton, Edward R., to Dowland-Bach Corporation. Safety valve control system for production well. 4,062,379, Cl. 137-565.000.
Close, Ross A. Beam cell and multiple cell type structural elements with varying spring constants. 4,062,426, Cl. 188-1.00B.
Cloudy & Britton Inc.: *See—*
Cloudy, Westley Ray, 4,062,202, Cl. 62-380.000.
Cloudy, Westley Ray, to Cloudy & Britton Inc. Vibratory weir assembly and method for separating foods being frozen during fluidization in a food freezing tunnel. 4,062,202, Cl. 62-380.000.
Cloyd, Wallace W.: *See—*
Linkow, Leonard I.; Chambliss, Joni; and Cloyd, Wallace W., 4,062,119, Cl. 32-10.00A.
Coal Industry (Patents) Limited: *See—*
Gapper, Terence John; and O'Neill, Owen, 4,062,593, Cl. 299-1.000.
Coch, Lester, to Walders Kohinoor, Inc. Non-polluting system for metal surface treatments. 4,062,990, Cl. 427-242.000.
Cohen, Mordecai Elias, to Rosefair Electronics Limited. Model railway power supply. 4,062,294, Cl. 104-149.000.
Coherent Radiation: *See—*
Saunders, Richard J.; and Mefferd, Wayne Sherman, 4,063,064, Cl. 219-121.00L.
Coirault, Raymond, to Albert Rolland S.A. Method for treating drepanocytosis. 4,062,974, Cl. 424-308.000.
Cole, William Gwyn; Goudie, Alexander Crossan; and Rose, Carl John, to Beecham Group Limited. Phenyl butanones. 4,062,978, Cl. 424-331.000.
Coleman, John D. Rescue tool means. 4,062,117, Cl. 30-317.000.
Coles, Richard J.: *See—*
Burn, Derek; and Coles, Richard J., 4,062,955, Cl. 424-248.560.
Colgate-Palmolive Company: *See—*
Schaar, Charles H., 4,062,362, Cl. 128-287.000.
Collins, Clive A.; and Sollitto, Vincent F., to International Business Machines Corporation. Automatic clock tuning and measuring system for LSI computers. 4,063,308, Cl. 364-200.000.
Collins, Donald L.: *See—*
Downing, Harold A.; Rohrs, Donald L.; and Collins, Donald L., 4,062,209, Cl. 70-226.000.
Collins Industries, Inc.: *See—*
Downing, Harold A.; Rohrs, Donald L.; and Collins, Donald L., 4,062,209, Cl. 70-226.000.
Collins, Wesley A. Parking space barrier. 4,062,149, Cl. 49-49.000.
Collom, Donald J., to Weltronic Company. Welding and automation control system. 4,063,075, Cl. 364-119.000.
Collver, Michael W., to General Motors Corporation. Temperature independent semiconductor resistor and method of making same. 4,063,210, Cl. 338-7.000.
Coloplast International A/S: *See—*
Poulsen, Ib Finn, 4,062,361, Cl. 128-283.000.
Combustion Engineering, Inc.: *See—*
Andrea, Christo, 4,062,723, Cl. 176-30.000.
Bevilacqua, Frank; and Humphries, Joseph Roger, 4,062,725, Cl. 176-86.00R.
Manning, William P., 4,062,324, Cl. 122-145.000.
Cometa S. A.: *See—*
Montanvert, Michel Henri, 4,063,085, Cl. 250-221.000.
Commissariat a l'Energie Atomique: *See—*
Bouffenie, Jacques; Campargue, Roger; and Recule, Albert, 4,063,067, Cl. 219-374.000.
Lefebvre, Claude; and Therond, Jean-Paul, 4,063,181, Cl. 328-147.000.
Compagnie d'Electronique et de Piezo-Electricite: *See—*
Helle, Jacques, 4,063,194, Cl. 331-162.000.
Compagnie Europeenne de Teletransmission (C.E.T.T.): *See—*
Fontanes, Sylvain; and Forster, Daniel, 4,063,040, Cl. 179-15.00A.
Compagnie Francaise de Raffinage: *See—*
Jolivet, Yannick; and Lachevre, Christian, 4,062,787, Cl. 252-51.50A.
Compagnie Maritime d'Expertises - Comex: *See—*
Sicard, Hubert, 4,062,571, Cl. 285-26.000.
Conair, Inc.: *See—*
Peterson, Russell I., Jr., 4,062,500, Cl. 241-285.00R.
Confalone, Pasquale Nicholas; Lollar, Elizabeth Dianne; Pizzolato, Giacomo; and Uskokovic, Milan Radoje, to Hoffmann-La Roche Inc. Synthesis of biotin. 4,062,868, Cl. 260-332.20A.
Conlee, George D., to Hotsy Corporation, The. Fluid motor-driven pump using fluid pressure to set position of pilot valve. 4,062,639, Cl. 417-404.000.
Conley, Edward F.: *See—*
Lew, Sandy Y.; and Conley, Edward F., 4,062,872, Cl. 260-346.400.
Conner, Leo Buffington, Jr., to Motorola, Inc. Range tracking apparatus in a doppler radar. 4,063,238, Cl. 343-7.300.
Connolly, John W.: *See—*
Autrey, Robert C.; and Connolly, John W., 4,062,077, Cl. 5-365.000.
Conrow, Ransom Brown; Bernstein, Seymour; and Bauman, Norman, to American Cyanamid Company. Disazo compounds useful as complement inhibitors. 4,062,837, Cl. 260-175.000.
Consolidated Foods Corporation: *See—*
Momberg, James W., 4,062,430, Cl. 191-12.00R.
Container Corporation of America: *See—*
Gardner, Jeffrey M., 4,062,447, Cl. 206-396.000.
Conti, Vincent N., to Dairy Cap Corporation. Tamper-proof closure cap with self-removing ring. 4,062,466, Cl. 215-252.000.
Continental Oil Company: *See—*
Dew, John N.; Whitfill, Donald L.; and Crumb, Robert E., 4,062,405, Cl. 166-272.000.
Sparlin, Derry D., 4,062,403, Cl. 166-156.000.
Control Data Corporation: *See—*
Dreher, Robert Donald, 4,063,197, Cl. 332-16.00T.
Larson, Elden Roger; and Dreher, Robert Donald, 4,063,196, Cl. 332-16.00T.
Conwed Corporation: *See—*
Guyer, Vernon L.; and Bringen, David O., 4,062,721, Cl. 162-101.000.
Cook, Frank M., to Cincinnati Butchers' Supply Company, The. Static weighing on conveyor. 4,062,414, Cl. 177-145.000.
Copal Company Limited: *See—*
Inoue, Nobuyoshi, 4,063,262, Cl. 354-246.000.
Corning Glass Works: *See—*
Young, Peter L., 4,062,749, Cl. 204-192.0SP.
Cottrell, Edward D., to Champion International Corporation. Stick insertion apparatus. 4,062,108, Cl. 29-809.000.
Cottrell, Edward D., to Champion International Corporation. Stick separating apparatus. 4,062,438, Cl. 198-425.000.
Cousins, Charles, to Hughes Aircraft Company. Ceiling panel securing device. 4,062,164, Cl. 52-489.000.
Craig Corporation: *See—*
Brown, Marshall M., 4,063,179, Cl. 325-470.000.
Cravens Research Company: *See—*
Wanlass, Cravens L., 4,063,135, Cl. 318-220.00A.
Credner, Hans-Heinrich: *See—*
Monbaliu, Marcel Jacob; Van Poucke, Raphael Karel; Vrydaghs, Roger Henri; Credner, Hans-Heinrich; and Meier, Ernst, 4,062,683, Cl. 96-56.500.
Crellin, Robin Arthur; Jenkins, Christopher Robert; and Phelpstead, James William Percy, to Brown & Williamson Tobacco Corporation. Tobacco-smoke filters. 4,062,368, Cl. 131-265.000.
Criterion Manufacturing Company, Inc.: *See—*
Krewalk, John J., Sr., 4,063,263, Cl. 354-253.000.
Crowle, Brian, to RCA Corporation. Current regulating circuits. 4,063,149, Cl. 323-4.000.
Crumb, Robert E.: *See—*
Dew, John N.; Whitfill, Donald L.; and Crumb, Robert E., 4,062,405, Cl. 166-272.000.
Cseh, Georg; and Hari, Stefan, to Ciba-Geigy Corporation. Disazo pigments containing acylamino groups. 4,062,838, Cl. 260-176.000.
Cullen, Walter P.: *See—*
Celmer, Walter D.; Sciavolino, Frank C.; Cullen, Walter P.; and Routien, John B., 4,062,944, Cl. 424-117.000.
Celmer, Walter D.; Cullen, Walter P.; Moppett, Charles E.; Oscarson, John R.; and Routien, John R., 4,062,945, Cl. 424-122.000.
Culpepper, Will Lester, to Mead Corporation, The. Panel interlocking mechanism for wrapper type cartons. 4,062,270, Cl. 93-1.100.
Cummins Engine Company, Inc.: *See—*
Gant, Gary L.; Breeden, Michael D.; Sting, James A.; and Smith, Edward D., 4,062,336, Cl. 123-139.0AF.
Perr, Julius P.; Schutz, Peter W.; Badgley, Patrick R.; and Valdmanis, Edgars, 4,062,230, Cl. 73-114.000.
Perr, Julius P., 4,062,332, Cl. 123-97.00B.
Cunningham, Michael Paul: *See—*
Van Allan, James Albert; Cunningham, Michael Paul; Specht, Donald Paul; and Farid, Samir Yacoub, 4,062,686, Cl. 96-115.00R.

Curtiss-Wright Corporation: *See—*
  Jones, Charles, 4,062,326, Cl. 123-8.090.
Cutler, John Frederick; and Khanna, Jai Krishen, to Wallace Murray Corporation. Turbocharger system for an internal combustion engine. 4,062,188, Cl. 60-599.000.
Daicel Ltd.: *See—*
  Ohnaka, Kouichi; Yokoi, Shigeo; and Ohmiya, Takeo, 4,063,018, Cl. 536-98.000.
Daiichi Koshuha Kogyo Kabushiki Kaisha: *See—*
  Hanamoto, Yukimitsu; and Unoki, Shigeki, 4,062,216, Cl. 72-128.000.
Dailey, Carroll C., to United States of America, National Aeronautics and Space Administration. Method of and means for testing a glancing-incidence mirror system of an X-ray telescope. 4,063,088, Cl. 250-272.000.
Dairy Cap Corporation: *See—*
  Conti, Vincent N., 4,062,466, Cl. 215-252.000.
Daishowa Seiki Co., Ltd.: *See—*
  Kitaguchi, Ryoichi, 4,062,552, Cl. 279-1.0TS.
Daiwa Boseki Kabushiki Kaisha: *See—*
  Kato, Takashi; Yoshizawa, Toshio; Suzuki, Yoshihisa; and Ueda, Shozo, 4,062,439, Cl. 198-470.000.
Daley, Gerald P.: *See—*
  Edmonds, William L., Jr.; Daley, Gerald P.; and Den Besten, Leroy, 4,062,148, Cl. 47-76.000.
Damon, Lloyd E.: *See—*
  Sperry, Philip R.; Setzer, William C.; and Damon, Lloyd E., 4,062,704, Cl. 148-32.000.
Daniels, Charles Anthony: *See—*
  Witenhafer, Donald Edward; Daniels, Charles Anthony; and Koebel, Ralph Francis, 4,062,925, Cl. 423-240.000.
Daniels, Peter J. L.: *See—*
  Wright, John J.; Daniels, Peter J. L.; Mallams, Alan K.; and Nagabhushan, Tattanahalli L., 4,062,947, Cl. 424-180.000.
Danilov, Alexei Vladimirovich: *See—*
  Andrianov, Kuzma Andrianovich; Topchiashvili, Mikhail Izmailovich; Khananashvili, Lotary Mikhailovich; Danilov, Alexei Vladimirovich; Ryabtsev, Evgeny Ivanovich; Pagava, Dali Georgievna; Bodzhgua, Dzhimsher Shalvovich; Grigoriev, Veniamin Demyanovich; and Fridland, Vladimir Mikhailovich, 4,062,813, Cl. 252-511.000.
Danilychev, Vladimir Alexandrovich: *See—*
  Basov, Nikolai Gennadievich; Berezhnoi, Igor Alexandrovich; Vekshin, Vyacheslav Sergeevich; Danilychev, Vladimir Alexandrovich; Elatontsev, Albert Ivanovich; Ignatiev, Vladimir Vasilievich; Karyshev, Vitaly Dmitrievich; and Togulev, Alexandr Konstantinovich, 4,063,218, Cl. 340-26.000.
Darrow, Robert P.: *See—*
  Lewis, William C.; Darrow, Robert P.; and Yoerger, William E., 4,062,681, Cl. 96-1.50N.
Das Gupta, Sumit; and Eichelberger, Edward Baxter, to International Business Machines Corporation. Clock generation network for level sensitive logic system. 4,063,078, Cl. 364-700.000.
Davenport, Stanley; and Villari, Frank K., to Kendall Company, The. Chin strap for protective headgear. 4,062,068, Cl. 2-421.000.
Davies, David Allen Lewis, to G. D. Searle & Co. Ltd. Method for treating fungal infections using cell lytic enzymes. 4,062,941, Cl. 424-94.000.
Davies, David Omri; and Mills, Bruce Ernest, to Rolls-Royce Limited. Fuel supply system for a gas turbine engine. 4,062,183, Cl. 60-39.09F.
Davis, George W., to Inner-Tite, a division of Yara Engineering Corporation. Transition fittings. 4,062,572, Cl. 285-55.000.
Davis-Grabowski, Inc.: *See—*
  Davis, Joseph I., 4,062,293, Cl. 104-113.000.
Davis, Homer L.: *See—*
  Castaneda, Victor F.; and Davis, Homer L., 4,062,709, Cl. 149-19.300.
Davis, Joseph I., to Davis-Grabowski, Inc. Trolley ride apparatus. 4,062,293, Cl. 104-113.000.
Davis, R. Elbert. Method for forming fiberglass-resin laminate with permanent indicia pattern. 4,062,711, Cl. 156-244.000.
Dawson, Lindsay Grahame, to Rolls-Royce Limited. Gas turbine engine. 4,062,190, Cl. 60-682.000.
Dawson, Samuel G.: *See—*
  Fowler, Charles F.; and Dawson, Samuel G., 4,062,239, Cl. 73-343.00R.
Day, Edward George, to United Technologies Corporation. Method of making a unitary pattern assembly. 4,062,396, Cl. 164-15.000.
Day, Robert A., to United States of America, Navy. Method for fabricating ferroelectric ultrasonic transducers. 4,062,105, Cl. 29-594.000.
Dayco Corporation: *See—*
  Carter, Jared E., 4,062,450, Cl. 206-485.000.
  Hofle, Anatoli, 4,062,380, Cl. 138-122.000.
Debaigt, Jean, to CGEE Alsthom S.A. Support grating for equipment boxes. 4,062,166, Cl. 52-664.000.
Debski, Thomas R.; and Gaudio, Joseph, to Sedco Systems, Incorporated. Multiple polarization antenna element. 4,063,248, Cl. 343-727.000.
DeCaro, Charles J., to Textron Inc. Installation tool apparatus. 4,062,388, Cl. 144-32.00R.
Dechene, Ronald L.; Grimaldi, Frank G.; and Newton, Robert E., to Auburn International, Inc. Vapor liquid fraction determination. 4,063,153, Cl. 324-30.00R.
De Coene, Frans J. G. C., to Sperry Rand Corporation. Rethresher. 4,062,366, Cl. 130-27.00F.
Deere & Company: *See—*
  Dobberpuhl, Dale Rudolph, 4,062,135, Cl. 37-43.00R.
Deetz, David R.; and Ogburn, Roy H., to Xerox Corporation. Hammer driver controller for impact printers. 4,062,285, Cl. 101-93.020.
Delarue, Gerard Jean-Marie; and Verhaeghe, Michel Paul, to International Business Machines Corporation. Wideband frequency multiplier particularly adapted for use in badge readers and the like. 4,063,070, Cl. 235-474.000.
De Leo, Louis P.: *See—*
  O'Hara, Peter J.; and De Leo, Louis P., 4,062,126, Cl. 33-236.000.
Deleto, Vincent. Band lock for the ignition lock of a motor vehicle. 4,062,193, Cl. 70-18.000.
DeMarco, Thomas M.: *See—*
  Dupre, George T.; DeMarco, Thomas M.; Borkowski, Lawrence E.; and Waliczek, Harvey, 4,062,664, Cl. 55-319.000.
Demkovich, Gary Michael: *See—*
  Spicer, Larry Dean; Pensack, Joseph Michael; Wilbur, Robert Daniel; and Demkovich, Gary Michael, 4,062,856, Cl. 260-295.50B.
Den Admirant, Jacobus: *See—*
  Vos, Cornelis; Den Admirant, Jacobus; van Os, Jan Lambert; Jongsma, Hendrik Marten; and Kooreman, Hermanus Jacobus, 4,062,948, Cl. 424-180.000.
Den Besten, Leroy: *See—*
  Edmonds, William L., Jr.; Daley, Gerald P.; and Den Besten, Leroy, 4,062,148, Cl. 47-76.000.
denOtter, Marinus J. A. M.; and van Geenen, Albert A., to Stamicarbon, B.V. Mixed hydroxymethyl-hydroxyalkyl isocyanurates. 4,063,020, Cl. 544-221.000.
Dentsply Research and Development Corporation: *See—*
  Gonser, Donald I., 4,062,099, Cl. 29-415.000.
Derler, Charles J., to Jackson Vibrators, Inc. Utility tamper workhead. 4,062,292, Cl. 104-12.000.
De Rooij, Abraham H.; Prop, Jozef M. G.; and Wassen, Willem J., to Stamicarbon, B.V. Process for the preparation of a hydroxylamine salt. 4,062,927, Cl. 423-387.000.
De Santis, Stanislao A., to Appleman, Milo Don, a part interest. Animal feed block. 4,062,988, Cl. 426-656.000.
Deucker, Walter; and Lowenfeld, Rudolf, to Hoechst Aktiengesellschaft. Process for dyeing and printing synthetic fiber materials. 4,062,642, Cl. 8-1.0UA.
Deuterium Corporation: *See—*
  Spevack, Jerome S., 4,062,663, Cl. 55-238.000.
Deutsche Forschungs- und Versuchsanstalt fur Luft- Und Raumfahrt e.V.: *See—*
  Munscher, Dieter, 4,062,581, Cl. 294-83.00A.
Deutsche Gold- und Silber-Scheideanstalt Vormals Roessler: *See—*
  Knosp, Helmut, 4,062,676, Cl. 75-165.000.
  Kunst, Helmut; and Scondo, Christian, 4,062,702, Cl. 148-14.000.
Devico, Michael J.: *See—*
  Hillman, Gary; and Devico, Michael J., 4,062,463, Cl. 214-301.000.
Dew, John N.; Whitfill, Donald L.; and Crumb, Robert E., to Continental Oil Company. Method of treating oil-bearing formation using molten sulfur insulating. 4,062,405, Cl. 166-272.000.
Dewar, Bruce I.: *See—*
  Nicholas, Michael G.; Scott, Peter M.; and Dewar, Bruce I., 4,062,660, Cl. 51-295.000.
Deya, Eiki: *See—*
  Niki, Hiroshi; Deya, Eiki; Doi, Toru; Ahiko, Kenkichi; and Hayashi, Hiromichi, 4,062,409, Cl. 426-643.000.
Diamalt Aktiengesellschaft: *See—*
  Rambacher, Paul; and Make, Siegfried, 4,062,847, Cl. 260-260.000.
Dickie, Ray A.: *See—*
  Cheung, Mo-Fung; and Dickie, Ray A., 4,062,823, Cl. 260-29.4UA.
Dieterman, Alfred Johannes; and Riem, Roland Hendrick, to Emery Industries, Inc. Vinyl resins containing epoxidized mixed mellitate compounds. 4,062,824, Cl. 260-30.40R.
Dietrich, Felix, to Ferag AG. Apparatus for the infeed of printed products to a stacker. 4,062,537, Cl. 271-201.000.
Dietrich, Hagen: *See—*
  Potter, Dennis G.; Dietrich, Hagen; and Potschka, Joseph, 4,062,579, Cl. 292-348.000.
Digital Communications Corporation: *See—*
  Kaul, Pradman; and Gabbard, Ova Gene, 4,063,038, Cl. 179-15.0BA.
Dilworth, John Lewis, to McCulloch Corporation. Chain saw sharpener. 4,062,253, Cl. 76-25.00A.
Dimensional Development Corporation: *See—*
  Lo, Allen Kwok Wah; and Nims, Jerry Curtis, 4,063,265, Cl. 354-294.000.
Dingwall, Andrew Gordon Francis, to RCA Corporation. Integrated circuit device including both N-channel and P-channel insulated gate field effect transistors. 4,063,274, Cl. 357-53.000.
Director-General of the Agency of Industrial Science and Technology: *See—*
  Kato, Masao, 4,063,008, Cl. 526-47.000.
Di Rosa, Gaetano, to FATA S.p.A. Stop devices for overhead conveyors. 4,062,428, Cl. 188-275.000.
Dishaw, James; and Krause, Thomas R., to Burroughs Corporation. Character recognition system. 4,063,219, Cl. 340-146.3MA.
Ditta M. El. F.O.: *See—*
  Olivero, Carlo, 4,062,528, Cl. 266-103.000.
Dittloff, Dieter: *See—*
  Herbold, Oskar; and Dittloff, Dieter, 4,062,304, Cl. 110-8.00R.
Dixon, Richard Wayne, to Bell Telephone Laboratories, Incorporated.

Constant modulation index technique for measuring the derivatives of device parameters. 4,062,632, Cl. 356-72.000.
DIY-Sol, Inc.: *See—*
  Rapp, Felix, Jr.; and Barron, James M., 4,062,346, Cl. 126-270.000.
Dobberpuhl, Dale Rudolph, to Deere & Company. Safe operation control for a snowblower. 4,062,135, Cl. 37-43.00R.
Dobler, Steve; Grund, Christian; and Fondiller, Robert. Solid state touch switch. 4,063,111, Cl. 307-116.000.
Dr. -Ing. H.c.F. Porsche AG, Firma: *See—*
  Hensler, Paul; and Burst, Hermann, 4,062,566, Cl. 280-751.000.
Dodd, John Frederick: *See—*
  Marshall, John Stephen; and Dodd, John Frederick, 4,062,374, Cl. 137-115.000.
Doi, Toru: *See—*
  Niki, Hiroshi; Deya, Eiki; Doi, Toru; Ahiko, Kenkichi; and Hayashi, Hiromichi, 4,062,409, Cl. 426-643.000.
Dolfini, Joseph E.; Slusarchyk, William A.; and Koster, William H., to E. R. Squibb & Sons, Inc. Method for preparing 7-substituted cephalosporins and 6-substituted penicillins by replacement of sulfur-containing groups. 4,062,842, Cl. 260-239.100.
Dominion Tool & Die Co., Inc.: *See—*
  Taube, Frank; and Lawson, Lawrence, 4,062,220, Cl. 73-3.000.
  Taube, Frank, 4,062,472, Cl. 222-1.000.
Donig, Gerhard; and Muller, Manfred, to Siemens Aktiengesellschaft. Protection arrangement for an inverter. 4,063,302, Cl. 361-90.000.
Donini, Pietro, to Serone Laboratories, Inc. Induction of ovulation with partially desialylated human chorionic gonadotropin. 4,062,942, Cl. 424-100.000.
Dooley, Eddie W.: *See—*
  Morey, Everett D.; and Dooley, Eddie W., 4,062,205, Cl. 68-13.00A.
Dor, Abraham A., to Hanna Mining Company, The. Ore treatment involving a halo-metallization process. 4,062,675, Cl. 75-82.000.
Dormehl, Peter G. Gate locking means. 4,062,322, Cl. 119-27.000.
Dornier System GmbH: *See—*
  Roth, Gunter, 4,062,156, Cl. 52-111.000.
Dorren, Louis, to Quadracast Systems, Inc. Automatic control for phonographs playing records of different speeds. 4,062,547, Cl. 274-9.00A.
Doryokuro Kakunenryo Kaihatsu Jigyodan: *See—*
  Takada, Shingo; and Iwata, Ichiro, 4,062,923, Cl. 423-11.000.
Dotson, Ronald L.: *See—*
  Ahn, Byung K.; and Dotson, Ronald L., 4,062,743, Cl. 204-98.000.
Doty, Donald Judson; and Reavis, Robert Philmore, Jr., to AMP Incorporated. Square matrix electrical post receptacle. 4,062,610, Cl. 339-75.00M.
Douglas, Robert H.: *See—*
  Handly, Robert J.; and Douglas, Robert H., 4,063,081, Cl. 235-312.000.
Dow Chemical Company, The: *See—*
  Gilbert, Herman S.; and Kelley, Stephen F., 4,062,832, Cl. 260-47.0EP.
  Hay, Robert A., II, 4,062,718, Cl. 156-498.000.
  Noveroske, Robert L., 4,062,962, Cl. 424-263.000.
  Pierce, James K.; and Whipple, Sharon S., 4,062,853, Cl. 260-294.80G.
  Van Eyck, Michael J.; and Burdett, Kenneth A., 4,062,833, Cl. 260-77.5AT.
  Wagner, Eugene R.; and Allen, Bobbie J., 4,062,975, Cl. 424-319.000.
Dowland-Bach Corporation: *See—*
  Clinton, Edward R., 4,062,379, Cl. 137-565.000.
Downing, Harold A.; Rohrs, Donald L.; and Collins, Donald L., to Collins Industries, Inc. Wheelchair lock. 4,062,209, Cl. 70-226.000.
Draber, Wilfried; Buchel, Karl Heinz; Regel, Erik; and Plempel, Manfred, to Bayer Aktiengesellschaft. N-methyl-imidazole derivatives for treating mycotic infections. 4,062,959, Cl. 424-250.000.
Draney, Robert Gene, to J. I. Case Company. Swivel seat assembly. 4,062,588, Cl. 297-385.000.
Dreher, Robert Donald, to Control Data Corporation. Plural transistor oscillator phase continuous frequency encoder circuit. 4,063,197, Cl. 332-16.00T.
Dreher, Robert Donald: *See—*
  Larson, Elden Roger; and Dreher, Robert Donald, 4,063,196, Cl. 332-16.00T.
Dreyer, Dennis G.; Foley, Edward M.; and Rogers, Herbert E., Jr., to Cabot Corporation. Powder metallurgy compacts and products of high performance alloys. 4,062,678, Cl. 75-228.000.
Drobnik, Jaroslav: *See—*
  Kopecek, Jinrich; Ulbrich, Karel; Vacik, Jiri; Strohalm, Jiri; Chytry, Vladimir; Drobnik, Jaroslav; and Kalal, Jaroslav, 4,062,831, Cl. 260-47.0UA.
D'Silva, Themistocles D. J., to Union Carbide Corporation. Dioxane oxime compounds and pesticidal dioxane carbamoyloxime derivatives. 4,062,969, Cl. 424-278.000.
Dubeck, Michael; and Knapp, Gordon G., to Ethyl Corporation. Conversion of acetals. 4,062,898, Cl. 260-632.00B.
DuBois, Donald E. Paint brush bridle attachment. 4,062,084, Cl. 15-169.000.
Ducote, Hebon J., to Kaiser Aluminum & Chemical Corporation. Purification of contaminated alumina scavengers of aluminum reduction cell effluent dry scrubber systems. 4,062,696, Cl. 134-1.000.
Duden, Emanuel Hubert, to AGFA-GEVAERT N.V. Package for films. 4,063,101, Cl. 250-475.000.
Duesling, Clarence Lehi, to Canarco Incorporated. Centrifugal separator. 4,062,766, Cl. 209-211.000.
Duly, Alan R., to AVCO Corporation. Blade tip clearance measuring apparatus. 4,063,167, Cl. 324-61.00R.
Dumbeck, Robert Francis. Induction motor load monitor and control apparatus. 4,063,112, Cl. 307-116.000.
Duncan, Ian James, to Melford Engineering Limited. Suction cleaning apparatus. 4,062,085, Cl. 15-339.000.
Du Pont de Nemours, E. I., and Company: *See—*
  Roberts, William Owen, 4,062,806, Cl. 252-430.000.
  Rushmere, John Derek, 4,062,738, Cl. 204-49.000.
Dupre, George T.; DeMarco, Thomas M.; Borkowski, Lawrence E.; and Waliczek, Harvey, to NFE International, Ltd. Particle separator apparatus. 4,062,664, Cl. 55-319.000.
Durant, Graham John; and Ganellin, Charon Robin, to Smith Kline & French Laboratories Limited. Bis-guanidino-alkane compounds. 4,062,967, Cl. 424-273.00R.
Durex Products, Inc.: *See—*
  Simonson, Gordon Leon, 4,062,769, Cl. 209-399.000.
Durkoppwerke GmbH: *See—*
  Pollmeier, Konrad; and Hannemann, Franz, 4,062,309, Cl. 112-121.150.
Durr, Otto: *See—*
  Knapp, Rudolf, 4,062,437, Cl. 198-344.000.
Dyrschka, Helmut: *See—*
  Vogt, Wilhelm; Glaser, Hermann; and Dyrschka, Helmut, 4,062,810, Cl. 252-462.000.
E. R. Squibb & Sons, Inc.: *See—*
  Breuer, Hermann; and Treuner, Uwe D., 4,063,019, Cl. 544-27.000.
  Dolfini, Joseph E.; Slusarchyk, William A.; and Koster, William H., 4,062,842, Cl. 260-239.100.
  Hoehn, Hans; Bernstein, Jack; and Vogt, B. Richard, 4,062,858, Cl. 260-296.00P.
  Wade, Peter C.; and Vogt, Berthold Richard, 4,062,953, Cl. 424-232.000.
  Yale, Harry L.; and Bristol, James A., 4,062,852, Cl. 260-293.550.
  Yale, Harry Louis; and Petigara, Ramesh B., 4,062,846, Cl. 260-256.50R.
Eagle Electric Mfg. Co. Inc.: *See—*
  Munroe, Ronald G., 4,063,299, Cl. 361-45.000.
Earl, David R.: *See—*
  Tornetta, Lawrence A.; Hettel, Harry J.; Hamilton, Earle; and Earl, David R., 4,063,298, Cl. 361-40.000.
Eastman Kodak Company: *See—*
  Irick, Gether, Jr.; Kelly, Charles A.; and Martin, James C., 4,062,800, Cl. 252-402.000.
  Katusha, Jerome Mark; and Flamini, Stephen James, 4,062,385, Cl. 141-89.000.
  Lewis, William C.; Darrow, Robert P.; and Yoerger, William E., 4,062,681, Cl. 96-1.50N.
  Metildi, Frederic Howell; and Granger, Edward Maurice, 4,063,290, Cl. 360-9.000.
  Snoke, Roy Eugene; Risley, Hugh Arthur; and Goodhue, Charles Thomas, 4,062,731, Cl. 195-62.000.
  Sublett, Bobby J., 4,062,907, Cl. 260-860.000.
  Van Allan, James Albert; Cunningham, Michael Paul; Specht, Donald Paul; and Farid, Samir Yacoub, 4,062,686, Cl. 96-115.00R.
  Zollman, Herbert T., 4,062,827, Cl. 260-42.210.
Eastman Machine Company: *See—*
  Clark, Frederick G., 4,062,111, Cl. 30-139.000.
Eaton Corporation: *See—*
  Goetz, George W., 4,062,708, Cl. 149-35.000.
Ebbert, Robert J.; and Brown, John V. Riveting station assembly. 4,062,217, Cl. 72-391.000.
Eberle, Gunter. Apparatus for indicating the characteristic data of a centrifuge. 4,062,241, Cl. 73-432.00R.
Eckenbrecht, Robert R.; and Wolfe, Paul G., to GTE Sylvania Incorporated. Vertical synchronizing circuit. 4,063,288, Cl. 358-148.000.
Eclipse, Inc.: *See—*
  Spielman, Lyle S., 4,062,343, Cl. 126-91.00A.
Edelheit, Lewis S.: *See—*
  Barrett, David M.; Henkes, John L., Jr.; Edelheit, Lewis S.; and Godbarsen, Robert, 4,063,097, Cl. 250-360.000.
Edmonds, William L., Jr.; Daley, Gerald P.; and Den Besten, Leroy, to Den Besten, Leroy. Baskets for receiving tree balls and methods for use thereof. 4,062,148, Cl. 47-76.000.
Edwards, John Christopher; and Hemesley, Paul, to Radiochemical Centre Limited, The. Radio-assay of oestrogen. 4,062,733, Cl. 195-103.700.
Eggenberger, Markus A.; and Miller, Edward H., to General Electric Company. Moisture detector for steam line. 4,063,228, Cl. 340-239.00R.
Egli, Walter; and Erlandson, Otto Douglas, to General Atomic Company. Method and apparatus for countercurrent washing of particulate solids. 4,062,697, Cl. 134-10.000.
Eibe, Werner W., to SK&F Lab Co. Variable crown roll. 4,062,096, Cl. 29-113.0AD.
Eibl, Volker, to Sachs Systemtechnik GmbH. Apparatus for destroying microorganisms in an aqueous liquid by electrolytic oxidation. 4,062,754, Cl. 204-268.000.
Eichelberger, Edward Baxter; Muehldorf, Eugene Igor; Walther, Ronald Gene; and Williams, Thomas Walter, to International Business Machines Corporation. Method of propagation delay testing a level sensitive array logic system. 4,063,080, Cl. 235-302.000.
Eichelberger, Edward Baxter: *See—*
  Das Gupta, Sumit; and Eichelberger, Edward Baxter, 4,063,078, Cl. 364-700.000.

Eiland, P. Frank: *See—*
Spanel, Abram N.; Eiland, P. Frank; and Jacobs, David R., 4,062,308, Cl. 112-79.00A.
Eisai Co., Ltd.: *See—*
Kijima, Shizumasa; Yamatsu, Isao; Minami, Norio; and Inai, Yuichi, 4,062,879, Cl. 260-396.00R.
Tung, Ta-Cheng; and Lin, Jung-Yaw, 4,062,949, Cl. 424-180.000.
Eisenberg, Arnold J.; Klink, Jerome P.; Symborski, Alex P.; and White, Gerald L., to Owens-Corning Fiberglas Corporation. Method and apparatus for packaging linear material. 4,062,501, Cl. 242-18.00G.
Eisenwerk-Gesellschaft Maximilianshutte mbH: *See—*
Knuppel, Helmut; Brotzmann, Karl; and Fassbinder, Hans-Georg, 4,062,657, Cl. 48-77.000.
Elatontsev, Albert Ivanovich: *See—*
Basov, Nikolai Gennadievich; Berezhnoi, Igor Alexandrovich; Vekshin, Vyacheslav Sergeevich; Danilychev, Vladimir Alexandrovich; Elatontsev, Albert Ivanovich; Ignatiev, Vladimir Vasilievich; Karyshev, Vitaly Dmitrievich; and Togulev, Alexandr Konstantinovich, 4,063,218, Cl. 340-26.000.
Electrospace Systems, Inc.: *See—*
Fenwick, Richard C., 4,063,250, Cl. 343-844.000.
Eli Lilly and Company: *See—*
Marshall, Winston S., 4,062,895, Cl. 260-613.00R.
Shields, James E., 4,062,816, Cl. 260-8.000.
Elliot, Jack, to Locker Industries Limited. Sieving of materials. 4,062,768, Cl. 209-341.000.
Elliott, Marvel A.: *See—*
Schumacher, Frank A.; and Elliott, Marvel A., 4,062,201, Cl. 62-353.000.
ELMEG Elektro-Mechanik GmbH: *See—*
Lahl, Gerhard, 4,062,250, Cl. 74-415.000.
Elmore, Lester; Broxholm, Thomas M., deceased; and by Broxholm, Anne K., administratrix. Liquid propellant modular gun incorporating dual cam operation and internal water cooling. 4,062,266, Cl. 89-7.000.
Elstner, Klaus, to Siemens Aktiengesellschaft. Arrangement for effecting a variable modification of information used to control a printer unit of a teleprinter. 4,063,029, Cl. 178-17.500.
Emery Industries, Inc.: *See—*
Dieterman, Alfred Johannes; and Riem, Roland Hendrick, 4,062,824, Cl. 260-30.40R.
Mains, Harold E.; Williams, Frederick R.; and O'Brien, William L., 4,062,819, Cl. 260-18.00N.
Mitchell, Mark L., III; and Sharkey, Hubert J., 4,062,820, Cl. 260-18.00N.
O'Brien, William L., 4,062,829, Cl. 260-45.85T.
EMI Limited: *See—*
Gadd, Norman Arthur, 4,063,104, Cl. 250-523.000.
Endres, Thomas E.; and Rodeman, Donald W., to General Motors Corporation. Stereo noise reduction circuit. 4,063,039, Cl. 179-15.0BT.
Energiagazdalkodasi Intezet: *See—*
Toth, Jozsef, 4,062,338, Cl. 123-25.00C.
Enge, Harald A., to Industrial Coils, Inc. Beam scanning system. 4,063,098, Cl. 250-396.00R.
Enterprise de Recherches et d'Activites Petrolieres (E.R.A.P.): *See—*
Soulie, Guy; and Iato, Michel, 4,062,402, Cl. 166-.600.
Enters, Edward W.; and Middlesworth, Tommy A., to Gilson Brothers Company. Rotary tiller tine assembly. 4,062,408, Cl. 172-123.000.
Entreprise Gagneraud Pere et Fils: *See—*
Kunicki, Maryan; and Roussel, Michel, 4,062,672, Cl. 75-30.000.
Eric, Lucien; and Chubb, Francis L. Preparation of sulfonylureas. 4,062,889, Cl. 260-553.00D.
Ericson, Eric Axel; and Kaufhold, Frederick Daniel, to General Electric Company. Switchboard drawout apparatus incorporating joint clamping mechanism. 4,063,305, Cl. 361-339.000.
Erlandson, Otto Douglas: *See—*
Egli, Walter; and Erlandson, Otto Douglas, 4,062,697, Cl. 134-10.000.
Essilor International (Compagnie Generale d'Optique S.A.): *See—*
Wajs, Georges; and Lenne, William, 4,062,627, Cl. 351-160.000.
Estabrook, Mark R., to Barnes Drill Co. Vacuum filter with indexable filter web. 4,062,780, Cl. 210-401.000.
Ethicon, Inc.: *See—*
Gilding, Denis Keith; and Taylor, John Albert, Jr., 4,062,834, Cl. 260-77.5AA.
Ethyl Corporation: *See—*
Dubeck, Michael; and Knapp, Gordon G., 4,062,898, Cl. 260-632.00B.
Evans, David Roger, to Sealectro Corporation. Electrical feedthrough devices. 4,062,612, Cl. 339-94.00A.
Evans, Donald H., to Apex Packaging Co. (Swansea) Limited. Collapsible cart. 4,062,556, Cl. 280-79.200.
Evans, John Brian, to Xerox Corporation. Adaptive equalizer with improved distortion analysis. 4,063,183, Cl. 328-163.000.
Evans, Raymond Dennis, to Holset Engineering Company Limited. Fluid couplings. 4,062,432, Cl. 192-58.00B.
Everett, Lawrence H.: *See—*
Billerbeck, Fred W.; Everett, Lawrence H.; McGowan, Patrick G.; and Pettinga, Paul V., 4,062,986, Cl. 426-633.000.
Expanded Metal Company Limited, The: *See—*
Christison, John M., 4,062,160, Cl. 52-445.000.
Extel Corporation: *See—*
Greischar, Richard H., 4,063,045, Cl. 179-84.00R.
Exton, Reginald J., to United States of America, National Aeronautics and Space Administration. TV fatigue crack monitoring system. 4,063,282, Cl. 358-106.000.
Exxon Research and Engineering Company: *See—*
Blaser, Don E.; and Worley, Arthur C., 4,062,656, Cl. 48-73.000.
Blaser, Don E., 4,062,760, Cl. 208-127.000.
Brois, Stanley J.; and Gutierrez, Antonio, 4,062,786, Cl. 252-51.50R.
Luckenbach, Edward C., 4,062,761, Cl. 208-164.000.
Fa. Wilhelm Fette GmbH: *See—*
Hinzpeter, Jurgen, 4,062,914, Cl. 264-40.100.
Fabian, Gordon R.: *See—*
Kammerer, Leo P.; Fabian, Gordon R.; and Burns, Roger D., 4,063,140, Cl. 318-561.000.
Facom: *See—*
Brihier, Gerard Charles Camille, 4,062,242, Cl. 73-462.000.
Falbel, Gerald: *See—*
Astheimer, Robert W.; and Falbel, Gerald, 4,063,093, Cl. 250-330.000.
Falckenberg, Richard; and Abd el Wahid, Ali, to Siemens Aktiengesellschaft. Powder flow control device for growing Verneuil crystals. 4,062,653, Cl. 23-273.00V.
Falvo, Ralph, to Hooker Chemicals & Plastics Corporation. Electrolysis method and apparatus. 4,062,753, Cl. 204-266.000.
Fancher, Llewellyn W.; and Freiberg, Ashley H., to Stauffer Chemical Company. Insecticidal, miticidal and lepidoptericidal active isothiuronium complex acids and free bases. 4,062,892, Cl. 260-564.00E.
Fansteel Inc.: *See—*
Marsh, Harold G.; and Pierret, James A., 4,062,679, Cl. 75-245.000.
Farha, Floyd, Jr.: *See—*
Box, E. O., Jr.; and Farha, Floyd, Jr., 4,062,772, Cl. 210-63.00R.
Farid, Samir Yacoub: *See—*
Van Allan, James Albert; Cunningham, Michael Paul; Specht, Donald Paul; and Farid, Samir Yacoub, 4,062,686, Cl. 96-115.00R.
Farrar, Grover L.; and Storms, Phillip W., to Marathon Oil Company. Polychlorinated naphthalenic pesticides. 4,062,972, Cl. 424-308.000.
Fascione, Pietro: *See—*
Meier, John G.; and Vollerin, Bernard, 4,062,325, Cl. 122-225.00R.
Fassbinder, Hans-Georg: *See—*
Knuppel, Helmut; Brotzmann, Karl; and Fassbinder, Hans-Georg, 4,062,657, Cl. 48-77.000.
FATA S.p.A.: *See—*
Di Rosa, Gaetano, 4,062,428, Cl. 188-275.000.
Faure, Louis Henry; Johnston, Howard Thomas, Jr.; and Townsend, Dana Roberts, to International Business Machines Corporation. Multiple site, differential displacement, surface contacting assembly. 4,063,172, Cl. 324-158.00P.
Fay, Homer; Quets, Jean Marie; and Hatwell, Henri, to Union Carbide Corporation. Apparatus and process for the separation of particles of different density with magnetic fluids. 4,062,765, Cl. 209-1.000.
Feather Safety Razor Co., Ltd.: *See—*
Ishida, Minoru; and Komiyama, Kenzi, 4,062,113, Cl. 30-260.000.
Feder, Abe H. Lamp adaptor with finial mounting. 4,063,079, Cl. 362-290.000.
Feeley, James Downer: *See—*
Alcorn, George Edward; Feeley, James Downer; and Lyman, Julian Turner, 4,062,720, Cl. 156-643.000.
Fegley, Charles R. Chemical dispensing anti-burglar booby trap device. 4,062,473, Cl. 222-5.000.
Fegley, Charles Robert. Fluid dispensing anti-burglar booby trap device. 4,062,303, Cl. 109-29.000.
Fehler, Adolf; and Kirschey, Gunter, to MTU Motoren-und Turbinen-Union. Combustion chamber for gas turbine engines. 4,062,182, Cl. 60-39.650.
Fehlmann, Hans R.; and Blackburn, Richard D., to General Electric Company. First house protector for voltage regulators and the like. 4,063,148, Cl. 323-43.50S.
Feierabend, Louis B.; and Luhrs, Otto R., to International Business Machines Corporation. Contouring magnetic head surfaces. 4,062,659, Cl. 51-281.00R.
Felder, Donald W. Slope landing compensator system. 4,062,507, Cl. 244-17.170.
Fenwick, Richard C., to Electrospace Systems, Inc. Beam and null switch step steerable antenna system. 4,063,250, Cl. 343-844.000.
Ferag AG: *See—*
Dietrich, Felix, 4,062,537, Cl. 271-201.000.
Fernald, Olaf H. System for improving the resolution of alpha-numeric characters displayed on a cathode ray tube. 4,063,232, Cl. 340-324.0AD.
Fernsler, Ronald Eugene: *See—*
Nero, Leroy William; and Fernsler, Ronald Eugene, 4,063,133, Cl. 315-370.000.
Fichter, Manfred: *See—*
Sieber, Manfred; Fichter, Manfred; and Muller, Ingo, 4,063,142, Cl. 318-678.000.
Figiel, Francis J., to Allied Chemical Corporation. Azeotrope-like compositions of trichlorotrifluoroethane, methanol, ethanol, isopropanol and nitromethane. 4,062,794, Cl. 252-171.000.
Finfinger, Dean Almon: *See—*
Campbell, Clarence Clayton; and Finfinger, Dean Almon, 4,063,011, Cl. 526-194.000.
Finike Italiana Marposs Soc. In Accomandita Semplice di Mario Possati & C.: *See—*
Albertazzi, Gastone, 4,062,124, Cl. 33-174.00Q.

Fischer, Erwin: *See—*
Henych, Ivo; Fischer, Erwin; and Reist, Jurg, 4,062,398, Cl. 164-337.000.
Fischer & Porter Company: *See—*
Herzl, Peter J., 4,062,238, Cl. 73-194.0VS.
Fitzwilton Limited: *See—*
Thompson, William Henry; Worthington, Ralph Eric; and Stamper, David John, 4,062,929, Cl. 423-483.000.
Fixtures Manufacturing Corporation: *See—*
Polsky, Norman; Burnett, Frank; Gerner, James L.; Heying, Norman J.; and Lieberman, Edgar M., 4,062,590, Cl. 297-455.000.
Flamini, Stephen James: *See—*
Katusha, Jerome Mark; and Flamini, Stephen James, 4,062,385, Cl. 141-89.000.
Flatau, Carl R. Remote manipulator. 4,062,455, Cl. 214-1.0CM.
Fleenor, Marvin B.: *See—*
Srinivasan, Vadake R.; Fleenor, Marvin B.; Summers, Richard J.; and Bumm, Margaret W., 4,062,727, Cl. 195-28.00R.
Fleischer, Henry. Clamping device. 4,062,573, Cl. 285-116.000.
Fleischer, Robert L., to Terradex Corporation. Reducing noise in uranium exploration. 4,063,087, Cl. 250-253.000.
Fleischman, Andor A., to Bell & Howell Company. Large aperture extended range zoom lens. 4,062,621, Cl. 350-184.000.
Fleischman, Andor A.; and Linke, Walter R., to Bell & Howell Company. Reflex copier lens. 4,062,625, Cl. 350-202.000.
Floyd, Danny Doyce: *See—*
Ault, Earl Rema; Bradford, Robert Spencer, Jr.; Bhaumik, Mani Lal; and Floyd, Danny Doyce, 4,063,191, Cl. 331-94.50G.
FMC Corporation: *See—*
Youmans, Donald W., 4,062,582, Cl. 296-28.00C.
Foley, Edward M.: *See—*
Dreyer, Dennis G.; Foley, Edward M.; and Rogers, Herbert E., Jr., 4,062,678, Cl. 75-228.000.
Fondiller, Robert: *See—*
Dobler, Steve; Grund, Christian; and Fondiller, Robert, 4,063,111, Cl. 307-116.000.
Fontanes, Sylvain; and Forster, Daniel, to Compagnie Europeenne de Teletransmission (C.E.T.T.). High speed multiplexer and demultiplexer for pulse code channels. 4,063,040, Cl. 179-15.00A.
Ford, Allen G.: *See—*
United States of America, National Aeronautics and Space Administration; and Ford, Allen G., 4,062,245, Cl. 74-81.000.
Ford, Mary Jane. Design painting kit. 4,062,286, Cl. 101-375.000.
Ford Motor Company: *See—*
Allison, William D., 4,062,637, Cl. 403-151.000.
Cheung, Mo-Fung; and Dickie, Ray A., 4,062,823, Cl. 260-29.4UA.
Gandhi, Haren S.; Shelef, Mordecai; Stepien, Henryk K.; and Yao, Hsien C., 4,062,808, Cl. 252-454.000.
Rogerson, Jerry B.; and Simmons, Calvin J., 4,062,910, Cl. 261-34.00A.
Formica Corporation: *See—*
Power, George Edward; and Wulfekotter, Dedley, 4,062,992, Cl. 428-90.000.
Forstbauer, Wilhelm, to Siemens Aktiengesellschaft. Inverter arrangement with two controlled three-phase inverters. 4,063,143, Cl. 363-40.000.
Forster, Daniel: *See—*
Fontanes, Sylvain; and Forster, Daniel, 4,063,040, Cl. 179-15.00A.
Fosroc A.G.: *See—*
Kyte, Colin Trevor; Lewis, Geoffrey John; Pearce, Edgar; and Hume, Keith, 4,062,991, Cl. 427-297.000.
Foster, Edward Henry; and Reiss, James M., to Atomic Products Corporation. Radioactive syringe shield having retentive bushing. 4,062,353, Cl. 128-1.100.
Foulletier, Louis; and Lalu, Jean-Pierre, to Produits Chimiques Ugine Kuhlmann. Perfluoroalkylene quaternary heterocyclic nitrogen salts. 4,062,849, Cl. 260-279.00R.
Fowler, Charles F.; and Dawson, Samuel G. Method and apparatus for temperature probe cover with provision for sanitary disposal. 4,062,239, Cl. 73-343.00R.
Fox, Martin D. Crossed beam ultrasonic flowmeter. 4,062,237, Cl. 73-194.00A.
Fox, Sidney Jared; and Martin, Van Clifton, to International Business Machines Corporation. Multiple array printer. 4,063,254, Cl. 346-75.000.
Frahm, Bradley K.; and Watson, William E., to Ames Company. Vapor recovery adapter for gasoline-dispensing nozzles. 4,062,384, Cl. 141-46.000.
Franck, Jean-Pierre; and Le Page, Jean-Francois, to Institut Francais du Petrole. Process for manufacturing a catalyst comprising aluminum oxide and boron oxide, the resulting catalyst and the use thereof in alkylation reactions. 4,062,805, Cl. 252-430.000.
Franke, Earnest Allen, to Bell Telephone Laboratories, Incorporated. Method and apparatus for locating the source of corona discharge. 4,063,168, Cl. 324-72.000.
Franz, John E., to Monsanto Company. N-Organo-N-phosphonomethylglycine-N-oxides and plant growth regulant and phytotoxicant compositions containing same. 4,062,669, Cl. 71-86.000.
Franzen, Harry A. Protective headgear. 4,062,067, Cl. 2-410.000.
Fredriksson, Lars Olof Arne, to K A Bergs Smide AB. Shears coupling. 4,062,088, Cl. 24-73.0HR.
Fredriksson, Roland, to AB Motala Verkstad. Device for tightening, prestressing and untightening a threaded joint. 4,062,254, Cl. 81-57.380.
Freiberg, Ashley H.: *See—*
Fancher, Llewellyn W.; and Freiberg, Ashley H., 4,062,892, Cl. 260-564.00E.
Fremstedal, Sverre Oddmund; and Lier, Otto Bjorn, to Simrad A.S. Method and means for erasing recordings on magnetic paper, particularly for distance measuring equipment. 4,063,296, Cl. 360-118.000.
French, Charles S.: *See—*
McGee, Charles Donald; French, Charles S.; and Robran, David T., 4,062,133, Cl. 36-120.000.
Fricke, Roy A., to Wells Manufacturing Corporation. Spark plug cleaner. 4,062,155, Cl. 51-412.000.
Fridland, Vladimir Mikhailovich: *See—*
Andrianov, Kuzma Andrianovich; Topchiashvili, Mikhail Izmailovich; Khananashvili, Lotary Mikhailovich; Danilov, Alexei Vladimirovich; Ryabtsev, Evgeny Ivanovich; Pagava, Dali Georgievna; Bodzhgua, Dzhimsher Shalvovich; Grigoriev, Veniamin Demyanovich; and Fridland, Vladimir Mikhailovich, 4,062,813, Cl. 252-511.000.
Fried, Jelena Maria: *See—*
Fried, Joseph Nicholas; and Fried, Jelena Maria, 4,062,121, Cl. 33-169.00R.
Fried, Joseph Nicholas; and Fried, Jelena Maria. Device for comparing the dimensional proportions of tapered objects. 4,062,121, Cl. 33-169.00R.
Friedman, Eliot I. Amplifier for receive mode operation. 4,063,175, Cl. 325-377.000.
Friedman, Ronald L.; and Lewis, Roger N., to Argus Chemical Corporation. t-Alkyl peresters of t-hydroperoxides catalysts for polymerization of unsaturated monomers. 4,063,013, Cl. 526-227.000.
Friedrich, Wolfgang E. Collapsible transport container. 4,062,467, Cl. 220-7.000.
Frommer, Werner; Junge, Bodo; Keup, Uwe; Muller, Lutz; Puls, Walter; and Schmidt, Delf, to Bayer Aktiengesellschaft. Amino sugar derivatives. 4,062,950, Cl. 424-181.000.
Fuchiguchi, Tetsuya: *See—*
Masuzima, Sho; Yoshida, Shuhei; Yaguchi, Toshiyuki; and Fuchiguchi, Tetsuya, 4,062,719, Cl. 156-502.000.
Fuji Photo Film Co., Ltd.: *See—*
Aonuma, Masashi; Ogawa, Hiroshi; and Tamai, Yasuo, 4,063,000, Cl. 428-403.000.
Hara, Hiroshi; Adachi, Keiichi; and Kusaba, Hideyuki, 4,062,684, Cl. 96-60.00R.
Kuboshima, Makoto, 4,063,261, Cl. 354-225.000.
Matsukawa, Hiroharu; and Saeki, Keiso, 4,062,799, Cl. 252-316.000.
Takeda, Keiji; Matsumoto, Kenji; Tamura, Hiroshi; and Nagata, Masayoshi, 4,062,685, Cl. 96-88.000.
Tamai, Tasuo; Osawa, Sadao; Miyatuka, Hajime; and Yamamoto, Masaya, 4,062,789, Cl. 252-62.10L.
Fujii Denko Company, Limited: *See—*
Tamada, Yuzuru; and Yoshimura, Susumu, 4,062,092, Cl. 24-241.0SB.
Fujimoto, Keimei; Ohno, Nobuo; Okuno, Yoshitoshi; Mizutani, Toshio; Ohno, Isao; Hirano, Masachika; Itaya, Nobushige; and Matsuo, Takashi, to Sumitomo Chemical Company, Limited. Insecticidal substituted acetate compounds. 4,062,968, Cl. 424-275.000.
Fujimoto, Yasuo; and Tamada, Terumi, to Nippon Chemiphar Co., Ltd. 5-Benzyl-2-oxazolidone derivatives and a process for producing the same. 4,062,862, Cl. 260-307.00C.
Fujino, Yoshiharu; Chiba, Iwane; Chiyonobu, Toshimi; Takahata, Tomihisa; and Kachi, Yasuhiko, to Ishikawayima-Harima Jukogyo Kabushiki Kaisha. Butt-welding device. 4,063,061, Cl. 219-101.000.
Fujita, Shigeru; Murayama, Koichi; Kaneda, Toyohito; Harada, Susumu; and Ueda, Toshio, to Kabushiki Kaisha Japan Metal Finishing Co.; and Nitto Boseki Kabushiki Kaisha. Zinc plating process. 4,062,742, Cl. 204-55.00R.
Fujitsu Limited: *See—*
Tashiro, Joji; Kawanabe, Tadahiko; Araki, Noboru; Ashihara, Kazuo; Ando, Toshio; Hiragi, Sadayuki; Itoh, Kazuo; Ozawa, Yukio; Odera, Eiichi; and Inoue, Kosuke, 4,063,043, Cl. 179-18.0EA.
Fujiwara, Kazushi; Asai, Mituyuki; and Aoki, Susumu, to Kabushiki Kaisha Yaskawa Denki Seisakusho. Reed switch. 4,063,203, Cl. 335-154.000.
Fukai, Tetsuya: *See—*
Komatsubara, Michimasa; Waku, Toshihiko; Fukai, Tetsuya; and Satsuka, Akito, 4,063,201, Cl. 333-70.00R.
Funck, Alfred; and Simon, Jo, to Acieries Reunies de Burbach-Eich-Dudelange S.A. ARBED. Method of descaling metal products. 4,063,063, Cl. 219-121.0LM.
Furukawa, Takashi: *See—*
Hayami, Satohiro; Furukawa, Takashi; and Takeoka, Yoshihiko, 4,062,700, Cl. 148-12.300.
G. D. Searle & Co.: *See—*
Benn, Walter R., 4,062,843, Cl. 260-239.55R.
G. D. Searle & Co. Ltd.: *See—*
Davies, David Allen Lewis, 4,062,941, Cl. 424-94.000.
Gabbard, Ova Gene: *See—*
Kaul, Pradman; and Gabbard, Ova Gene, 4,063,038, Cl. 179-15.0BA.
Gadd, Norman Arthur, to EMI Limited. Scanning X-ray machine arrangement. 4,063,104, Cl. 250-523.000.
Gaggenau- Werke, Haus- und Lufttechnik GmbH: *See—*
Blanquet, Georg V., 4,062,071, Cl. 4-7.000.
Gal, Jacques: *See—*
Buvet, Rene; Vallot, Roger; Messina, Richard; Gal, Jacques; and Yu, Liang-Tse, 4,062,745, Cl. 204-131.000.

Galantine, Raymond M.; and Brown, Bruce G., to AMF Incorporated. Apparatus for programming the deposition of material on a tire surface. 4,062,716, Cl. 156-361.000.
Gale, Michael Thomas, to RCA Corporation. Black-and-white diffractive subtractive light filter. 4,062,628, Cl. 350-162.00R.
Gamba, Otto O. M., to United States of America, Energy Research and Development Administration. X-ray chemical analyzer for field applications. 4,063,089, Cl. 250-272.000.
Gambro AG: *See—*
Riede, Gerhard, 4,062,778, Cl. 210-321.00B.
Gander, Robert J., to Johnson & Johnson. Laminated structures comprising films of silane crosslinked acrylate interpolymers having water barrier properties. 4,062,451, Cl. 206-524.200.
Gandhi, Haren S.; Shelef, Mordecai; Stepien, Henryk K.; and Yao, Hsien C., to Ford Motor Company. Stabilized rhenium catalyst. 4,062,808, Cl. 252-454.000.
Ganellin, Charon Robin; and Young, Rodney Christopher, to Smith Kline & French Laboratories Limited. Pharmacologically active cyclo butenediones. 4,062,863, Cl. 424-273.00R.
Ganellin, Charon Robin: *See—*
Durant, Graham John; and Ganellin, Charon Robin, 4,062,967, Cl. 424-273.00R.
Gant, Gary L.; Breeden, Michael D.; Sting, James A.; and Smith, Edward D., to Cummins Engine Company, Inc. Fuel control valve. 4,062,336, Cl. 123-139.0AF.
Ganzi, Gary C.: *See—*
Jha, Anil D.; and Ganzi, Gary C., 4,062,756, Cl. 204-301.000.
Gapper, Terence John; and O'Neill, Owen, to Coal Industry (Patents) Limited. Mining machines. 4,062,593, Cl. 299-1.000.
Gardner-Denver Company: *See—*
Adkins, Richard Wayne; and Mayer, James R., 4,062,411, Cl. 173-115.000.
Jameson, James J., 4,062,431, Cl. 192-3.330.
Gardner, Irving. Safety shoulder strap holder. 4,062,065, Cl. 2-271.000.
Gardner, Jeffrey M., to Container Corporation of America. Reel package. 4,062,447, Cl. 206-396.000.
Gardner, Tommy R.; and Lansford, Robert W., to Halliburton Company. Methods for inhibiting scale formation. 4,062,796, Cl. 252-180.000.
Garner, Robert; and Petitpierre, Jean Claude, to Ciba-Geigy Corporation. 3-Indolyl-3-phenyl-phthalides. 4,062,866, Cl. 260-326.14R.
Gary, Herbert H.; and Shin, Chung T., to Bristol-Myers Company. Aluminum hydroxybromide antiperspirant compositions. 4,062,938, Cl. 424-47.000.
Gauch, Hermann; and Schopf, Dieter, to Union Special G.m.b.H. Cooling device for sewing machines. 4,062,310, Cl. 112-280.000.
Gaudio, Joseph: *See—*
Debski, Thomas R.; and Gaudio, Joseph, 4,063,248, Cl. 343-727.000.
Gault, Robert H., to Bethlehem Steel Corporation. Method and means for controlling long stroke pumping units. 4,062,640, Cl. 417-415.000.
Geaghan, Mark E. Low temperature breathing apparatus. 4,062,359, Cl. 128-212.000.
Gebr. Eickhoff, Maschinenfabrik und Eisengiesserei m.b.H.: *See—*
Schubert, Jurgen, 4,062,442, Cl. 198-502.000.
Gebruder Weiss K.G.: *See—*
Kneer, Franz Xaver, 4,062,770, Cl. 210-12.000.
Gee, Alan E., to American Optical Corporation. High speed switching circuit. 4,063,091, Cl. 250-310.000.
GeGa Gesellschaft fur Gasetechnik Lotz KG: *See—*
Luck, Ewald, 4,062,495, Cl. 239-559.000.
Gehrken, Hubert; and Keunecke, Gerhard, to Chemiebau Dr. A. Zieren Gesellschaft Mit Beschraenkter Haftung & Co. KG. Process for the desublimation of phthalic anhydride. 4,062,871, Cl. 260-346.400.
Gehrmann, Klaus: *See—*
Ohorodnik, Alexander; Lohmar, Elmar; Gehrmann, Klaus; and Stutzke, Paul, 4,062,888, Cl. 260-545.00P.
General Atomic Company: *See—*
Egli, Walter; and Erlandson, Otto Douglas, 4,062,697, Cl. 134-10.000.
General Electric Company: *See—*
Barrett, David M.; Henkes, John L., Jr.; Edelheit, Lewis S.; and Godbarsen, Robert, 4,063,097, Cl. 250-360.000.
Boah, John K.; and Kennedy, Richard W., 4,063,272, Cl. 357-50.000.
Eggenberger, Markus A.; and Miller, Edward H., 4,063,228, Cl. 340-239.00R.
Ericson, Eric Axel; and Kaufhold, Frederick Daniel, 4,063,305, Cl. 361-339.000.
Fehlmann, Hans R.; and Blackburn, Richard D., 4,063,148, Cl. 323-43.50S.
Godfrey, David E.; and Kuchar, Norman R., 4,062,229, Cl. 73-88.00F.
Litch, Ernest W., III, 4,063,060, Cl. 219-93.000.
Lye, Ronald William, 4,063,301, Cl. 361-88.000.
Miller, Donald E., 4,063,139, Cl. 318-331.000.
Morey, Everett D.; and Dooley, Eddie W., 4,062,205, Cl. 68-13.00A.
Perkins, Donald W.; and Smith, Marvin W., 4,063,306, Cl. 363-17.000.
Rich, Joseph A.; and Westendorp, Willem F., 4,063,126, Cl. 313-146.000.
Schumacher, Frank A.; and Elliott, Marvel A., 4,062,201, Cl. 62-353.000.
Snow, Barton H., 4,062,185, Cl. 60-204.000.
Snow, Barton H.; and Homan, Frank R., 4,062,186, Cl. 60-226.00R.
Stivender, Paul M.; Lang, George R.; and Mentink, Raymond C., 4,062,518, Cl. 250-519.000.
General Electric Company Limited, The: *See—*
Paddison, Eric; Perez-Cavero, Leonardo; and Wilson, Christopher George, 4,063,300, Cl. 361-78.000.
General Foods, Limited: *See—*
McMillan, Kenneth R.; and Henderson, Gary A., 4,062,982, Cl. 426-320.000.
General Motors Corporation: *See—*
Collver, Michael W., 4,063,210, Cl. 338-7.000.
Endres, Thomas E.; and Rodeman, Donald W., 4,063,039, Cl. 179-15.0BT.
Hall, Beuford C., Jr., 4,062,638, Cl. 416-244.00A.
Stapleton, Thomas T.; and Rober, Herbert E., 4,062,633, Cl. 356-159.000.
Gennetten, Edward W., to United States of America, Navy. Apparatus and method for encoding and decoding digital information. 4,063,291, Cl. 360-40.000.
Georg Fischer Aktiengesellschaft: *See—*
Henych, Ivo; Fischer, Erwin; and Reist, Jurg, 4,062,398, Cl. 164-337.000.
Gerber Products Company: *See—*
Billerbeck, Fred W.; Everett, Lawrence H.; McGowan, Patrick G.; and Pettinga, Paul V., 4,062,986, Cl. 426-633.000.
Geri, Sergio: *See—*
Ceccato, Giovanni; Moggi, Giovanni; and Geri, Sergio, 4,062,830, Cl. 260-47.0UP.
Gerner, James L.: *See—*
Polsky, Norman; Burnett, Frank; Gerner, James L.; Heying, Norman J.; and Lieberman, Edgar M., 4,062,590, Cl. 297-455.000.
Ghidelli, Massimo. Apparatus for producing flaked yarns. 4,062,175, Cl. 57-36.000.
Gidge, Lester, to Terra-Tex Corporation. Mulch carpet and method for making same. 4,062,145, Cl. 47-9.000.
Gilb, Tyrell T., to Simpson Manufacturing Co., Inc. Tubular strut with asymetrical end design and drawn hole. 4,062,167, Cl. 52-693.000.
Gilbert, Herman S.; and Kelley, Stephen F., to Dow Chemical Company, The. Quaternized epichlorohydrin copolymer useful in treating potable water and method of preparation. 4,062,832, Cl. 260-47.0EP.
Gilbert, Stephen Lee: *See—*
Ban, Vladimir Sinisa; and Gilbert, Stephen Lee, 4,062,318, Cl. 118-49.000.
Gilding, Denis Keith; and Taylor, John Albert, Jr., to Ethicon, Inc. Method for preparing extrudable polytetramethylene ether polyurethane-urea resins. 4,062,834, Cl. 260-77.5AA.
Gilson Brothers Company: *See—*
Enters, Edward W.; and Middlesworth, Tommy A., 4,062,408, Cl. 172-123.000.
Girling Limited: *See—*
Sawyer, Patrick Frank; and Child, Robin Edward, 4,062,597, Cl. 303-6.00C.
Gist-Brocades N.V.: *See—*
Vos, Cornelis; Den Admirant, Jacobus; van Os, Jan Lambert; Jongsma, Hendrik Marten; and Kooreman, Hermanus Jacobus, 4,062,948, Cl. 424-180.000.
Giuffredi, Giancarlo. Valves for aerosol containers. 4,062,478, Cl. 222-402.160.
Glaenzer Spicer: *See—*
Orain, Michel Alexandre, 4,062,603, Cl. 308-217.000.
Glaser, Hermann: *See—*
Vogt, Wilhelm; Glaser, Hermann; and Dyrschka, Helmut, 4,062,810, Cl. 252-462.000.
Glaum, Gerald Vernon; O'Neill, Charles Edward; and Subramanian, Kohur Nagaraja, to International Nickel Company, Inc., The. Reductive leaching of limonitic ores with hydrogen sulfide. 4,062,924, Cl. 423-150.000.
Glavitsch, Hans; and Vitins, Michael, to BBC Brown Boveri & Company Limited. Method for locating a fault on a line near to a measuring location with the aid of substitute signals. 4,063,166, Cl. 324-52.000.
Glaxo Laboratories Limited: *See—*
Burn, Derek; and Coles, Richard J., 4,062,955, Cl. 424-248.560.
Glick, Michael B. Security device. 4,063,110, Cl. 307-112.000.
Globe Tool and Engineering Company, The: *See—*
Peck, Kenneth E., Jr., 4,062,502, Cl. 242-7.030.
Gnocchi, Colombo: *See—*
Pipitone, Roberto; and Gnocchi, Colombo, 4,063,049, Cl. 179-110.00A.
Godbarsen, Robert: *See—*
Barrett, David M.; Henkes, John L., Jr.; Edelheit, Lewis S.; and Godbarsen, Robert, 4,063,097, Cl. 250-360.000.
Godfrey, David E.; and Kuchar, Norman R., to General Electric Company. Method of testing the integrity of installed rock bolts. 4,062,229, Cl. 73-88.00F.
Goetz, George W., to Eaton Corporation. Azide gas generating composition. 4,062,708, Cl. 149-35.000.
Goffe, William L., to Xerox Corporation. Imaging process employing electrical or magnetic reverse migration force and softenable materials. 4,062,680, Cl. 96-1.0PS.
Goldman, Neal: *See—*
Marks, Ronald A.; and Goldman, Neal, 4,062,165, Cl. 52-514.000.
Gondo, Hisashi; Nakasugi, Hajime; Kimura, Turugi; and Yamaguti, Masanobu, to Nippon Steel Corporation. Method for heat treatment of high-toughness weld metals. 4,062,705, Cl. 148-127.000.
Gonser, Donald I., to Dentsply Research and Development Corporation. Method of making a shield for a radiation projector. 4,062,099, Cl. 29-415.000.

Goodhue, Charles Thomas: *See—*
Snoke, Roy Eugene; Risley, Hugh Arthur; and Goodhue, Charles Thomas, 4,062,731, Cl. 195-62.000.
Goodrich, Calvin C., to Procter & Gamble Company, The. Carton. 4,062,486, Cl. 206-626.000.
Goodwin, Frank E.; and Nussmeier, Thomas A., to Hughes Aircraft Company. Dual channel optical homodyne receiver. 4,063,084, Cl. 250-199.000.
Gooen, Kenneth Herbert, to RCA Corporation. Semiconductor thyristor devices having breakover protection. 4,063,277, Cl. 357-38.000.
Goppinger, Alois: *See—*
Griesshammer, Rudolf; Koppl, Franz; Goppinger, Alois; Hamster, Helmut; and Thalmeier, Josef, 4,062,714, Cl. 156-304.000.
Gordon, Lloyd L.: *See—*
Welsh, John; Vaughan, Richard N.; and Gordon, Lloyd L., 4,063,229, Cl. 340-280.000.
Gorlach, Hans. Device for storage of skis. 4,062,453, Cl. 211-60.0SK.
Gotoh, Miyuki. Stop-motion apparatus of weaving looms. 4,063,303, Cl. 361-170.000.
Goudie, Alexander Crossan: *See—*
Cole, William Gwyn; Goudie, Alexander Crossan; and Rose, Carl John, 4,062,978, Cl. 424-331.000.
Goudriaan, Frans; and van Klinken, Jakob, to Shell Oil Company. Process for the conversion of hydrocarbons in atmospheric crude residue. 4,062,758, Cl. 208-80.000.
Gould Inc.: *See—*
Spiegelberg, Bernard N., 4,063,007, Cl. 429-176.000.
Granger, Edward Maurice: *See—*
Metildi, Frederic Howell; and Granger, Edward Maurice, 4,063,290, Cl. 360-9.000.
Grapes, Eugene F.: *See—*
Patterson, W. W., III; and Grapes, Eugene F., 4,062,520, Cl. 254-161.000.
Graphic Magicians, Inc.: *See—*
Sponaes, John R.; and Kutsch, Wilhelm P., 4,062,644, Cl. 8-2.50A.
Grassme, Ulrich, to Siemens Aktiengesellschaft. Dental apparatus for X-ray diagnosis. 4,063,099, Cl. 250-413.000.
Grecu, Renato: *See—*
Ribaldone, Giuseppe; and Grecu, Renato, 4,062,860, Cl. 260-302.00D.
Green, Charles A. Method of and apparatus for conditioning pulp. 4,062,526, Cl. 366-171.000.
Greenberg, Burton; and McCarthy, James George, to Oce-Industries Inc. Photocopy machine. 4,062,533, Cl. 271-10.000.
Greenig, Nelson L., to Sperry Rand Corporation. Fluid supported belt about cylindrical mandrel for transporting magnetic particles. 4,062,321, Cl. 118-623.000.
Greischar, Richard H., to Extel Corporation. Telecommunication line switching circuit. 4,063,045, Cl. 179-84.00R.
Greiser, John W., to Transco Products, Inc. Coplanar stripline antenna. 4,063,246, Cl. 343-700.0MS.
Gressitt, Tillman Johnson; and O'Regan, Richard, to Bell Telephone Laboratories, Incorporated. Insulation piercing slotted beam electrical connector. 4,062,614, Cl. 339-97.00R.
Griesshammer, Rudolf; Koppl, Franz; Goppinger, Alois; Hamster, Helmut; and Thalmeier, Josef, to Wacker-Chemitronic Gesellschaft fur Elektronik Grundstoffe mbH. Process for making hollow silicon bodies and bodies utilizing board-shaped members to form the basic geometric shape so made. 4,062,714, Cl. 156-304.000.
Griffiths, David Kallom, to United States Steel Corporation. Oxygen-lime distributor for steelmaking vessel. 4,062,530, Cl. 266-222.000.
Grigoriev, Veniamin Demyanovich: *See—*
Andrianov, Kuzma Andrianovich; Topchiashvili, Mikhail Izmailovich; Khananashvili, Lotary Mikhailovich; Danilov, Alexei Vladimirovich; Ryabtsev, Evgeny Ivanovich; Pagava, Dali Georgievna; Bodzhgua, Dzhimsher Shalvovich; Grigoriev, Veniamin Demyanovich; and Fridland, Vladimir Mikhailovich, 4,062,813, Cl. 252-511.000.
Grimaldi, Frank G.: *See—*
Dechene, Ronald L.; Grimaldi, Frank G.; and Newton, Robert E., 4,063,153, Cl. 324-30.00R.
Gross, Heinz, to Hoesch Werke Aktiengesellschaft. Apparatus for making seam welded tubing. 4,063,058, Cl. 219-62.000.
Grosseau, Albert, to Societe Anonyme Automobiles Citroen. Inertia switch having a variable operating threshold. 4,063,052, Cl. 200-61.460.
Grossman, Harold; and Mandel Sherman, to Simtrac Inc. Shade producing system. 4,062,146, Cl. 47-17.000.
Grove, Marvin H., to M & J Valve Company. Valve construction. 4,062,516, Cl. 251-174.000.
Grove, Russell E. Mounting brackets for an article handling apparatus. 4,062,464, Cl. 214-450.000.
Grube, Lowell R.; and Campbell, Willis R., to Sperry Rand Corporation. Twine wrapping mechanism for a roll forming machine. 4,062,279, Cl. 100-5.000.
Grund, Christian: *See—*
Dobler, Steve; Grund, Christian; and Fondiller, Robert, 4,063,111, Cl. 307-116.000.
Grunza, Gene, to Threshold Technology, Inc. System for channel switching based on speech word versus noise detection. 4,063,031, Cl. 179-1.00P.
Grushkin, Bernard, to Xerox Corporation. Process for preparing N-substituted-8,13-dioxodinaphtho-(2,1-b; 2',3'-d)furan-6-carboxamides. 4,062,854, Cl. 260-295.00A.
GTE Automatic Electric (Canada) Ltd.: *See—*
Norman, Stanley R. C., 4,063,180, Cl. 328-112.000.
GTE Automatic Electric Laboratories Incorporated: *See—*
Miknaitis, Sigitas, 4,063,205, Cl. 335-202.000.
Orchard, Henry John, 4,063,187, Cl. 330-107.000.
GTE Laboratories Inc.: *See—*
Proud, Joseph M.; Bessett, Richard A.; and McNeill, William H., 4,063,132, Cl. 315-248.000.
GTE Sylvania Incorporated: *See—*
Eckenbrecht, Robert R.; and Wolfe, Paul G., 4,063,288, Cl. 358-148.000.
Guisinger, Barrett E.: *See—*
Vidovic, Nikola; and Guisinger, Barrett E., 4,063,279, Cl. 358-19.000.
Gulf Research & Development Company: *See—*
Beuther, Harold; and Montagna, Angelo A., 4,062,757, Cl. 208-61.000.
Montagna, Angelo A., 4,062,902, Cl. 260-666.00A.
Gullick Dobson Limited: *See—*
Allen, Archelaius Dawson, 4,062,194, Cl. 61-45.00D.
Gundlach, Robert W.; and Hudson, Frederick W., to Standard Products Corporation. Apparatus for detecting bumps in a web. 4,063,051, Cl. 200-61.130.
Gupta, Jutta Das; Markwitz, Wernhard; and Paetsch, Werner, to Siemens Aktiengesellschaft. Circuit arrangement for diversity data transmission. 4,063,174, Cl. 325-304.000.
Gurwara, Sweet K.: *See—*
Rich, Daniel H.; and Gurwara, Sweet K., 4,062,746, Cl. 204-159.120.
Guseinov, Fikret Dzhabrail Ogly: *See—*
Mekhtiev, Soltan Dzhafarovich; Rizaev, Ramiz Gasan Kuli Ogly; Novruzova, Adilya Shir Mamed Kyzy; Magerramova, Roida Jusuf Kyzy; Suleimanov, Geibat Nagmetovich; Rafiev, Murshud Sary Ogly; Guseinov, Fikret Dzhabrail Ogly; and Sheinin, Viktor Efimovich, 4,062,885, Cl. 260-465.00C.
Gutierrez, Antonio: *See—*
Brois, Stanley J.; and Gutierrez, Antonio, 4,062,786, Cl. 252-51.50R.
Guyer, Vernon L.; and Bringen, David O., to Conwed Corporation. Use of surfactant to increase water removal from fibrous web. 4,062,721, Cl. 162-101.000.
Gymer, Geoffrey E., to Pfizer Inc. 1-Aryl-2-(1-imidazolyl) alkyl ethers and thioethers. 4,062,966, Cl. 424-273.00R.
H. Goodman & Sons, Inc.: *See—*
Herzog, Milton W., 4,062,137, Cl. 40-19.500.
Haag, Thomas M.; Brendley, William H., Jr.; and Martorano, Richard, to Rohm and Haas Company. Rheologically modified metal decorating and aqueous coating composition comprising copolymer latex and aminoplast. 4,062,821, Cl. 260-29.4UA.
Haak, Mark P., to McCormick & Company, Incorporated. Spray dried mustard flour. 4,062,979, Cl. 426-44.000.
Haak, Willard J.: *See—*
Antosz, Frederick J.; Haak, Willard J.; and Wovcha, Merle G., 4,062,880, Cl. 260-397.100.
Haarmann, Walter: *See—*
Nickl, Josef; Narr, Berthold; Muller, Erich; Roch, Josef; and Haarmann, Walter, 4,062,973, Cl. 424-308.000.
Haberlein, Peter, to Institut Dr. Friedrich Forster, Prufgeratebau. Adjusting device for magnetic probes. 4,063,159, Cl. 324-260.000.
Hagen, Hermann, to Motoren- und Turbinen-Union Munchen GmbH. Cryogenic fuel evaporation in compressor of gas turbine. 4,062,184, Cl. 60-39.28P.
Hagino, Minoru: *See—*
Hara, Katsuo; Hagino, Minoru; and Sukegawa, Tokuzo, 4,063,269, Cl. 357-30.000.
Hara, Katsuo; Hagino, Minoru; and Sukegawa, Tokuzo, 4,063,276, Cl. 357-30.000.
Hagiwara, Miyuki; Sohara, Masayoshi; Araki, Kunio; and Kagiya, Tsutomu, to Japan Atomic Energy Research Institute; and Kishimoto Sangyo Co., Ltd. Heat-resistant, resin coated electric wire characterized by three resin coatings, the outer of which is less highly crosslinked than the coating next adjacent thereto. 4,062,998, Cl. 428-380.000.
Hahnke, Manfred; and Papenfuhs, Theodor, to Hoechst Aktiengesellschaft. Process for the preparation of violet dyestuffs of the triphenylmethane series. 4,062,877, Cl. 260-391.000.
Hall, Beuford C., Jr., to General Motors Corporation. Turbine wheel with shear configured stress discontinuity. 4,062,638, Cl. 416-244.00A.
Hall, John B.: *See—*
Sprecker, Mark A.; Vock, Manfred Hugo; Schmitt, Frederick Louis; Hall, John B.; and Sanders, James Milton, 4,062,894, Cl. 260-586.00R.
Hallas, Robert; Martin, Jerry Roy; and Tadanier, John Soloman, to Abbott Laboratories. 4''-O-sulfonyl erythromycin-9-o-oxime derivatives. 4,063,014, Cl. 536-9.000.
Halliburton Company: *See—*
Gardner, Tommy R.; and Lansford, Robert W., 4,062,796, Cl. 252-180.000.
Hamamatsu Terebi Kabushiki Kaisha: *See—*
Hara, Katsuo; Hagino, Minoru; and Sukegawa, Tokuzo, 4,063,269, Cl. 357-30.000.
Hara, Katsuo; Hagino, Minoru; and Sukegawa, Tokuzo, 4,063,276, Cl. 357-30.000.

Hamamoto, Tetsuo: *See—*
Nogami, Yoshio; Ooka, Isami; Hamamoto, Tetsuo; Shibano, Hirofumi; Miyao, Kenji, deceased; and Miyao, Mieko, legal heir, 4,062,931, Cl. 423-522.000.
Hamann, Lutz, to Maschinenfabrik Augsburg-Nurnberg Aktiengesellschaft. Emergency slipper for high-speed vehicles. 4,062,295, Cl. 104-279.000.
Hamaoka, Sachio: *See—*
Kasahara, Keisuke; Hamaoka, Sachio; Katori, Youichi; and Mizuno, Takaharu, 4,062,199, Cl. 62-197.000.
Hamilton, Earle: *See—*
Tornetta, Lawrence A.; Hettel, Harry J.; Hamilton, Earle; and Earl, David R., 4,063,298, Cl. 361-40.000.
Hamlin, Thomas J.: *See—*
Stange, Klaus K.; Smith, Richard E.; Hamlin, Thomas J.; and Cassano, James R., 4,062,538, Cl. 271-243.000.
Hammen, Philip D., to Pfizer Inc. Process for preparing hypotensive 2-(4-aroylpiperazin-1-yl)-amino-6,7-dimethoxyquinazolines. 4,062,844, Cl. 260-256.40Q.
Hammer, Alfred Paul, to Thomson-CSF. Connector for optical fibre. 4,062,624, Cl. 350-96.00C.
Hammond, James Woodrow; and Shughart, Mervin Leonard, to AMP Incorporated. Method for singling out and serially feeding electrical leads. 4,062,106, Cl. 29-628.000.
Hamster, Helmut: *See—*
Griesshammer, Rudolf; Koppl, Franz; Goppinger, Alois; Hamster, Helmut; and Thalmeier, Josef, 4,062,714, Cl. 156-304.000.
Hanamoto, Yukimitsu; and Unoki, Shigeki, to Daiichi Koshuha Kogyo Kabushiki Kaisha. Metal bending methods and apparatus. 4,062,216, Cl. 72-128.000.
Hanawa, Fumiaki: *See—*
Izawa, Tatsuo; Miyashita, Tadashi; and Hanawa, Fumiaki, 4,062,665, Cl. 65-3.00A.
Handly, Robert J.; and Douglas, Robert H., to Honeywell. Computer apparatus. 4,063,081, Cl. 235-312.000.
Hanifin, John William, Jr.: *See—*
Allen, George Rodger, Jr.; Hanifin, John William, Jr.; Moran, Daniel Bryan; and Albright, Jay Donald, 4,062,958, Cl. 424-250.000.
Hankins, Anthony. Board game utilizing owner operated businesses. 4,062,544, Cl. 273-134.0AF.
Hanna Mining Company, The: *See—*
Dor, Abraham A., 4,062,675, Cl. 75-82.000.
Hannemann, Franz: *See—*
Pollmeier, Konrad; and Hannemann, Franz, 4,062,309, Cl. 112-121.150.
Hannes Marker: *See—*
Korger, Heinz, 4,062,554, Cl. 280-11.37D.
Hansen, Gregory Blair, to BASF Wyandotte Corporation. Low-foaming cold-water glasswashing detergent. 4,062,814, Cl. 252-529.000.
Hara, Hiroshi; Adachi, Keiichi; and Kusaba, Hideyuki, to Fuji Photo Film Co., Ltd. Method for forming images by a stabilized color intensifying treatment. 4,062,684, Cl. 96-60.00R.
Hara, Katsuo; Hagino, Minoru; and Sukegawa, Tokuzo, to Hamamatsu Terebi Kabushiki Kaisha. Semiconductor photoelectron emission device. 4,063,269, Cl. 357-30.000.
Hara, Katsuo; Hagino, Minoru; and Sukegawa, Tokuzo, to Hamamatsu Terebi Kabushiki Kaisha. Semiconductor photoelectron emission device. 4,063,276, Cl. 357-30.000.
Harada, Susumu: *See—*
Fujita, Shigeru; Murayama, Koichi; Kaneda, Toyohito; Harada, Susumu; and Ueda, Toshio, 4,062,742, Cl. 204-55.00R.
Harayama, Akira, to Teikoku Piston Ring Co., Ltd. Method for maintaining an electrode and an article plated or to be plated immersed in an electrolytic chromium-plating bath in a normal condition. 4,062,741, Cl. 204-51.000.
Harayama, Takeo: *See—*
Yoshimoto, Takeo; Igarashi, Keiichi; Harayama, Takeo; Ura, Masaaki; Toyama, Teruhiko; Morikawa, Osamu; Takasawa, Yoshio; and Hojo, Yoshikata, 4,062,896, Cl. 260-613.00R.
Harbert, Donald Duane; and Kamerer, George Roy, to RCA Corporation. Signal quality evaluator. 4,063,033, Cl. 179-1.00P.
Hardenbrook, James M.: *See—*
Andrus, Paul G.; and Hardenbrook, James M., 4,063,154, Cl. 324-32.000.
Hardouin, Michel Jean-Charles: *See—*
Tilly, Guy; Hardouin, Michel Jean-Charles; and Lautrou, Jean, 4,062,934, Cl. 424-5.000.
Hargrove, John David; and Stevens, Geoffrey Charles, to British Petroleum Company Limited, The. Method for preparing desulfurization catalyst. 4,062,811, Cl. 252-462.000.
Hari, Stefan: *See—*
Cseh, Georg; and Hari, Stefan, 4,062,838, Cl. 260-176.000.
Harmon, Thomas; and Keeling, Tracy, to Kornylak Corporation. Foam mixing head. 4,062,525, Cl. 366-138.000.
Harnischfeger Corporation: *See—*
Hilpert, Conrad R., 4,062,187, Cl. 60-326.000.
Harper Electric Furnace Corporation: *See—*
Robertson, James R., 4,062,459, Cl. 214-21.000.
Harris Corporation: *See—*
Kozma, Adam; Vander Lugt, Anthony; and Bardos, Andrew M., 4,063,226, Cl. 365-125.000.
Harris, David; and Harris, Jessie. Barrow. 4,062,591, Cl. 298-2.000.
Harris, James A.: *See—*
Mod, Robert R.; Harris, James A.; Arthur, Jett C., Jr.; Magne, Frank C.; Sumrell, Gene; and Novak, Arthur F., 4,062,841, Cl. 260-239.0BF.
Harris, Jessie: *See—*
Harris, David; and Harris, Jessie, 4,062,591, Cl. 298-2.000.
Harris, Robert G.; and Monson, James A., to S. C. Johnson & Son, Inc. Pressurized container for two-phase system. 4,062,475, Cl. 222-95.000.
Harrison, Jonas P., to Chevron Research Company. Producing maleic anhydride using certain phosphorous-vanadium-silicon-oxygen containing catalysts. 4,062,873, Cl. 260-346.750.
Harsanyi, Kalman; Takacs, Kalman; Kiss, Pal; Szekeres, Laszlo; Papp, Gyula; and Benedek, Eva, to Chinoin Pharmaceutical and Chemical Works Ltd. Thiazoloisoquinolines with coronary and respiratory effects. 4,062,850, Cl. 260-286.00R.
Harsnett, Albert G. Locker security system. 4,063,251, Cl. 346-33.00R.
Hartco Company: *See—*
Lingle, Harrison Church, 4,062,087, Cl. 24-84.00R.
Hartig, Gunter. Method and apparatus for producing interference-free pulses. 4,063,107, Cl. 307-106.000.
Hartleben, Donald Herbert: *See—*
Jennings, Robert Newton; Murray, John; and Hartleben, Donald Herbert, 4,062,576, Cl. 292-258.000.
Hartman, Seymour, to Champion International Corporation. Product and process for producing fire retardant cellulosic materials. 4,063,003, Cl. 428-537.000.
Hartmann, Clinton S.: *See—*
Wagers, Robert S.; and Hartmann, Clinton S., 4,063,198, Cl. 333-30.00R.
Hasbro Development Corporation: *See—*
Holden, John E.; and Prodger, Brian S., 4,062,144, Cl. 46-151.000.
Hashimoto, Masakatsu: *See—*
Ogawa, Nobuhisa; and Hashimoto, Masakatsu, 4,062,936, Cl. 424-12.000.
Haskell Electronics & Tool Corporation: *See—*
Chaplin, Henry D., Jr.; and Wadsworth, Stuart E., 4,062,503, Cl. 242-35.50R.
Haspert, John C. Reciprocating drive method of mining and apparatus therefor. 4,062,594, Cl. 299-10.000.
Hastwell, Peter J. Thermal panel for heating liquids. 4,062,351, Cl. 126-271.000.
Hatanaka, Hiroshi; and Suzuki, Kiyosuki, to Sony Corporation. Stabilized power supply circuit. 4,063,147, Cl. 323-22.00Z.
Hatanaka, Kyohei; Inoue, Hajime; Hisatomi, Haruya; Okuda, Koya; Suzuki, Takeshi; Murao, Mikio; and Utiyama, Susumu, to Central Glass Co., Ltd.; and Kawasaki Jukogyo Kabushiki Kaisha. Method of melting raw materials for glass. 4,062,667, Cl. 65-135.000.
Hattendorf, Henry John. Two-speed video recorder. 4,062,248, Cl. 74-217.00R.
Hattori, Hajime; Okada, Tadashi; and Kezuka, Eiji, to Matsushita Electric Industrial Co., Ltd.; and Chubu-Nippon Broadcasting Co., Ltd. Chroma-signal processing system. 4,063,280, Cl. 358-22.000.
Hatwell, Henri: *See—*
Fay, Homer; Quets, Jean Marie; and Hatwell, Henri, 4,062,765, Cl. 209-1.000.
Hawkes, David A.; Uemlianin, Andray; and Lubanska, Hope, to British Steel Corporation. Iron or steelmaking process. 4,062,674, Cl. 75-61.000.
Hawthorne, M. Frederick; and Kalb, William, to United States of America, Navy. Polymer-bound metallocarborane catalyst product and process. 4,062,883, Cl. 260-429.00R.
Hay, Robert A., II, to Dow Chemical Company, The. Heat sealing means. 4,062,718, Cl. 156-498.000.
Hayakawa, Fumiyasu: *See—*
Ichikawa, Yasuhiko; and Hayakawa, Fumiyasu, 4,062,631, Cl. 355-3.00R.
Hayami, Satohiro; Furukawa, Takashi; and Takeoka, Yoshihiko, to Nippon Steel Corporation. Method for producing a steel sheet with dual-phase structure composed of ferrite- and rapidly-cooled-transformed phases. 4,062,700, Cl. 148-12.300.
Hayashi, Hiromichi: *See—*
Niki, Hiroshi; Deya, Eiki; Doi, Toru; Ahiko, Kenkichi; and Hayashi, Hiromichi, 4,062,409, Cl. 426-643.000.
Hayashi, Hisao: *See—*
Matsushita, Takeshi; Hayashi, Hisao; Aoki, Teruaki; and Mochizuki, Hidenobu, 4,063,275, Cl. 357-54.000.
Mochizuki, Hidenobu; Aoki, Teruaki; Matsushita, Takeshi; Hayashi, Hisao; and Okayama, Masanori, 4,062,707, Cl. 148-187.000.
Hayashi, Kohji: *See—*
Masunaga, Midori; Kohno, Yoshiki; and Hayashi, Kohji, 4,062,791, Cl. 252-63.000.
Hazelett, Robert William; and Wood, John Frederick Barry, to Hazelett Strip-Casting Corporation. Twin-belt continuous casting wherein the belts are sensed by mechanical probes. 4,062,235, Cl. 73-159.000.
Hazelett Strip-Casting Corporation: *See—*
Hazelett, Robert William; and Wood, John Frederick Barry, 4,062,235, Cl. 73-159.000.
Healy, Mark, to Senninger Irrigation, Inc. Sprinkler head sealing apparatus. 4,062,494, Cl. 239-230.000.
Heaton, Robert Bray: *See—*
Ronci, Mary Rachel; and Heaton, Robert Bray, 4,063,102, Cl. 250-482.000.
Heffernan, Stuart D.; and Maring, Donald G., to Rochester Telephone Corporation. Telephone metering interface with reverse signal sensor. 4,063,037, Cl. 179-7.10R.

Heimberger, Helmut, to Optilon W. Erich Heilmann GmbH. Method of and apparatus for removing coupling members of a slide-fastener stringer from a support tape. 4,062,100, Cl. 29-427.000.
Heimdorfer, Horst: *See—*
Appel, Wolfgang; Bjarsch, Otto; and Heimdorfer, Horst, 4,062,275, Cl. 99-393.000.
Heitfeld, Heinz: *See—*
Sochtig, Gerhard; and Heitfeld, Heinz, 4,063,072, Cl. 364-431.000.
Helle, Jacques, to Compagnie d'Electronique et de Piezo-Electricite. Wide-band frequency-controlled crystal oscillator. 4,063,194, Cl. 331-162.000.
Helmac Products Corporation: *See—*
McKay, Nicholas D., 4,062,083, Cl. 15-106.000.
Hemesley, Paul: *See—*
Edwards, John Christopher; and Hemesley, Paul, 4,062,733, Cl. 195-103.700.
Hemmerich, Heinz-Peter; Rosenkranz, Hans Jurgen; Papenroth, Wolfgang; and Klaeren, Aloys, to Bayer Aktiengesellschaft. Chalking-resistant titanium dioxide pigment. 4,062,692, Cl. 106-300.000.
Henbest, Richard George Cleveland: *See—*
Hutchinson, Francis Gowland; Henbest, Richard George Cleveland; and Leggett, Margaret Kenley, 4,062,826, Cl. 260-40.0TN.
Henderson, Gary A.: *See—*
McMillan, Kenneth R.; and Henderson, Gary A., 4,062,982, Cl. 426-320.000.
Henderson, Roland A. Solar-geothermal heat system. 4,062,489, Cl. 237-1.00A.
Henkel Kommanditgesellschaft auf Aktien: *See—*
Lehmann, Rudolf; Pfeiffer, Hans F.; Schindler, Joachim; and Schreiber, Wolfgang, 4,062,732, Cl. 195-66.00R.
Henkes, John L., Jr.: *See—*
Barrett, David M.; Henkes, John L., Jr.; Edelheit, Lewis S.; and Godbarsen, Robert, 4,063,097, Cl. 250-360.000.
Hennessee, Larry Wayne, to Hewlett-Packard Company. Plotter with adaptive velocity means for improving plotted line quality. 4,062,648, Cl. 364-105.000.
Hennessy, James William; and Turner, Bruce Munson, to Hycel, Inc. Mean corpuscular volume measuring apparatus and method. 4,063,309, Cl. 364-555.000.
Henrie, Thomas A.; Lindstrom, Roald E.; and Lei, Kenneth P. V., to United States of America, Interior. Extraction of copper from sulfide ores. 4,062,744, Cl. 204-106.000.
Hensler, Paul; and Burst, Hermann, to Dr. -Ing. H.c.F. Porsche AG, Firma. Passenger motor vehicle. 4,062,566, Cl. 280-751.000.
Hentz, Lyle J.; and Otto, Willard G., to Western Electric Co., Inc. Method for orienting an article. 4,062,462, Cl. 214-152.000.
Henych, Ivo; Fischer, Erwin; and Reist, Jurg, to Georg Fischer Aktiengesellschaft. Auxiliary device for use with a permanent mold in casting operations. 4,062,398, Cl. 164-337.000.
Herbold, Oskar; and Dittloff, Dieter, to Lampl, Helma. Apparatus for the pyrolysis of waste products. 4,062,304, Cl. 110-8.00R.
Herbold, Oskar, to Lampl, Helma; and Lampl, Helma. Apparatus for metered feeding of poorly flowable materials. 4,062,474, Cl. 222-36.000.
Herchenbach, Horst: *See—*
Brachthauser, Kunibert; Ramesohl, Hubert; Beisner, Klaus; and Herchenbach, Horst, 4,062,691, Cl. 106-100.000.
Hercules Incorporated: *See—*
Campbell, Clarence Clayton; and Finfinger, Dean Almon, 4,063,011, Cl. 526-194.000.
Heremans, Joseph Felix: *See—*
Masson, Pierre Lucien; and Heremans, Joseph Felix, 4,062,935, Cl. 424-12.000.
Herman Miller, Inc.: *See—*
Wolters, Richard H., 4,062,587, Cl. 297-306.000.
Hermanson, Terry. Disposable rain and weather protector. 4,062,369, Cl. 135-19.500.
Heronemus, William E.: *See—*
Mager, David; Heronemus, William E.; and Woodhead, Peter M. J., 4,062,189, Cl. 60-641.000.
Herr, Charles H., Jr.: *See—*
Bartlett, Harold H., Jr.; Herr, Charles H., Jr.; Kinney, Lionel L.; Lamport, Ivan R.; and Welch, Clarence A., 4,062,234, Cl. 73-135.000.
Herr, John Addison; and Jaffe, Wolfgang, to Singer Company, The. Rotor winding improvement. 4,063,123, Cl. 310-270.000.
Herring, Arthur J., Jr. Vibration absorption pad kit for seat mounting. 4,062,585, Cl. 297-195.000.
Herwig, Walter; and Kleiner, Hans-Jerg, to Hoechst Aktiengesellschaft. Flame resistant polyamide moulding compositions. 4,062,828, Cl. 260-45.70P.
Herzl, Peter J., to Fischer & Porter Company. Multi-range vortex-type flowmeter. 4,062,238, Cl. 73-194.0VS.
Herzog, Milton W., to H. Goodman & Sons, Inc. Inventory-control merchandise display apparatus. 4,062,137, Cl. 40-19.500.
Hesston Corporation: *See—*
Ankenman, Thomas Wayne; and Yatcilla, George, 4,062,280, Cl. 100-19.00A.
Hester, Jarrett C. Absorption heating-cooling system. 4,062,197, Cl. 62-101.000.
Hettel, Harry J.: *See—*
Tornetta, Lawrence A.; Hettel, Harry J.; Hamilton, Earle; and Earl, David R., 4,063,298, Cl. 361-40.000.
Heumann, Thomas E.: *See—*
Rando, Joseph F.; Kahn, Michael E.; Heumann, Thomas E.; and Luebbers, Scott S., 4,062,634, Cl. 356-248.000.
Hewlett-Packard Company: *See—*
Hennessee, Larry Wayne, 4,062,648, Cl. 364-105.000.
Watson, Robert E.; Walden, Jack M.; and Near, Charles W., 4,063,221, Cl. 364-900.000.
Hewlett-Packard GmbH: *See—*
Schaufele, Gunter Richard, 4,062,240, Cl. 73-422.0GC.
Heying, Norman J.: *See—*
Polsky, Norman; Burnett, Frank; Gerner, James L.; Heying, Norman J.; and Lieberman, Edgar M., 4,062,590, Cl. 297-455.000.
Heyman, Joseph S., to United States of America, National Aeronautics and Space Administration. CW ultrasonic bolt tensioning monitor. 4,062,227, Cl. 73-630.000.
Hibbard, George A., to Joy Manufacturing Company. Fluid operable hammer. 4,062,268, Cl. 91-165.000.
Hickok Manufacturing Co., Inc.: *See—*
Weiss, Adolph D., 4,062,066, Cl. 2-322.000.
Hietala, Veijo, to Valmet Oy. Device for measuring pulp stock consistency. 4,062,226, Cl. 73-63.000.
Hildebolt, William M., to Campbell Soup Company. Protein texturization by centrifugal spinning. 4,062,987, Cl. 426-641.000.
Hill, Thomas B.; and Tomasino, Charles, to Burlington Industries, Inc. Method of molding resin-impregnated fabric layer using release sheet and absorbent sheet inside evacuated bag. 4,062,917, Cl. 264-102.000.
Hillman, Gary; and Devico, Michael J., to Machine Technology, Inc. Automated single cassette load mechanism for scrubber. 4,062,463, Cl. 214-301.000.
Hilpert, Conrad R., to Harnischefeger Corporation. Apparatus and method for controlling kinetics of torque converter for hoist drum drive of crane. 4,062,187, Cl. 60-326.000.
Hinojosa, Carlos R., to Besendruch-Hofmann Inc. Brake fluid filter. 4,062,774, Cl. 210-94.000.
Hinzpeter, Jurgen, to Fa. Wilhelm Fette GmbH. Method and apparatus for monitoring the compression force of pelleting press rams. 4,062,914, Cl. 264-40.100.
Hiragi, Sadayuki: *See—*
Tashiro, Joji; Kawanabe, Tadahiko; Araki, Noboru; Ashihara, Kazuo; Ando, Toshio; Hiragi, Sadayuki; Itoh, Kazuo; Ozawa, Yukio; Odera, Eiichi; and Inoue, Kosuke, 4,063,043, Cl. 179-18.0EA.
Hirano, Masachika: *See—*
Fujimoto, Keimei; Ohno, Nobuo; Okuno, Yoshitoshi; Mizutani, Toshio; Ohno, Isao; Hirano, Masachika; Itaya, Nobushige; and Matsuo, Takashi, 4,062,968, Cl. 424-275.000.
Hirata, Osamu, to Canon Kabushiki Kaisha. Key switch. 4,063,054, Cl. 200-159.00R.
Hirose, Touji, to Mitutoyo Manufacturing Co., Ltd. Scale reading apparatus. 4,063,086, Cl. 250-237.00G.
Hisatomi, Haruya: *See—*
Hatanaka, Kyohei; Inoue, Hajime; Hisatomi, Haruya; Okuda, Koya; Suzuki, Takeshi; Murao, Mikio; and Utiyama, Susumu, 4,062,667, Cl. 65-135.000.
Hitachi, Ltd.: *See—*
Ito, Syoichi; and Tsubaki, Toshio, 4,063,253, Cl. 346-75.000.
Kawakami, Hideaki; Yoneda, Yutaka; Nagae, Yoshiharu; and Kitazima, Masaaki, 4,062,626, Cl. 350-160.0LC.
Kimura, Shin; and Terasawa, Yoshio, 4,063,270, Cl. 357-38.000.
Masuda, Masami; and Takasu, Syuhei, 4,062,150, Cl. 51-5.00D.
Morooka, Yasuo; and Tanifuji, Shinya, 4,063,076, Cl. 364-472.000.
Nishimura, Kotaro, 4,063,118, Cl. 307-270.000.
Okuhara, Shinzi; Hosokawa, Yoshikazu; Kamei, Tatsuya; and Suzuki, Masayoshi, 4,063,115, Cl. 307-252.00G.
Tashiro, Joji; Kawanabe, Tadahiko; Araki, Noboru; Ashihara, Kazuo; Ando, Toshio; Hiragi, Sadayuki; Itoh, Kazuo; Ozawa, Yukio; Odera, Eiichi; and Inoue, Kosuke, 4,063,043, Cl. 179-18.0EA.
Hitachi, Ltd: *See—*
Kojima, Shinichi; and Sakamoto, Yoshio, 4,063,185, Cl. 330-255.000.
Hixson, Richard M., to Transit Products Company, Inc. Rail fastening clips. 4,062,490, Cl. 238-338.000.
Hjalmarson, Sven Ingemar, to Sunds Aktiebolag. Billet grinding machine. 4,062,151, Cl. 51-34.00D.
Hoechst Aktiengesellschaft: *See—*
Deucker, Walter; and Lowenfeld, Rudolf, 4,062,642, Cl. 8-1.0UA.
Hahnke, Manfred; and Papenfuhs, Theodor, 4,062,877, Cl. 260-391.000.
Herwig, Walter; and Kleiner, Hans-Jerg, 4,062,828, Cl. 260-45.70P.
Kuxdorf, Bernhard; Kaiser, Karl; and Wissel, Kurt, 4,062,662, Cl. 55-206.000.
Ohorodnik, Alexander; Lohmar, Elmar; Gehrmann, Klaus; and Stutzke, Paul, 4,062,888, Cl. 260-545.00P.
Saupe, Wolfram, 4,062,771, Cl. 210-23.00F.
Vogt, Wilhelm; Glaser, Hermann; and Dyrschka, Helmut, 4,062,810, Cl. 252-462.000.
Hoehn, Hans; Bernstein, Jack; and Vogt, B. Richard, to E. R. Squibb & Sons, Inc. Derivatives of 5,6-dihydrobenzo[5,6]cyclohepta[1,2-b]pyrazolo[4,3-e]pyridin-11(1H)-ones and 11(1H)-imines. 4,062,858, Cl. 260-296.00P.
Hoerner Waldorf Corporation: *See—*
Bliss, Robert A., 4,062,487, Cl. 229-52.00B.
Hoesch Werke Aktiengesellschaft: *See—*
Gross, Heinz, 4,063,058, Cl. 219-62.000.
Muckenheim, Fritz, 4,062,710, Cl. 156-187.000.
Hoffman, Robert. Variable background intensity apparatus for imaging systems. 4,062,619, Cl. 350-13.000.

Hoffmann, Herwig: *See—*
Laurer, Peter Rudolf; Schroeder, Wolfgang; Hoffmann, Herwig; and Lingk, Heinz, 4,062,899, Cl. 260-635.00Y.
Hoffmann-La Roche Inc.: *See—*
Boller, Arthur; Cereghetti, Marco; and Scherrer, Hanspeter, 4,062,798, Cl. 252-299.000.
Confalone, Pasquale Nicholas; Lollar, Elizabeth Dianne; Pizzolato, Giacomo; and Uskokovic, Milan Radoje, 4,062,868, Cl. 260-332.20A.
Hofle, Anatoli, to Dayco Corporation. Hose construction. 4,062,380, Cl. 138-122.000.
Hojo, Yoshikata: *See—*
Yoshimoto, Takeo; Igarashi, Keiichi; Harayama, Takeo; Ura, Masaaki; Toyama, Teruhiko; Morikawa, Osamu; Takasawa, Yoshio; and Hojo, Yoshikata, 4,062,896, Cl. 260-613.00R.
Holbrook, Stanford T.: *See—*
Applegate, James M.; Holbrook, Stanford T.; Proell, Wayne A.; and Selin, Clifford E., 4,062,928, Cl. 423-392.000.
Holcomb, Don Reginald: *See—*
Nelson, John Raymond; Shaner, James Robert; and Holcomb, Don Reginald, 4,063,173, Cl. 325-11.000.
Holden, John E.; and Prodger, Brian S., to Hasbro Development Corporation. Flexible doll having arm members pivotable to plural stable positions. 4,062,144, Cl. 46-151.000.
Holland, Gerald F., to Pfizer Inc. Hypolipidemic alkenesulfonamides. 4,062,960, Cl. 424-258.000.
Holland, John Anthony, to Avion Australia Pty. Ltd. Bed having a movable mattress supporting platform. 4,062,074, Cl. 5-63.000.
Holmberg, Gote Eskil Yngve. Buckle of vehicle safety belts, particularly vehicle safety belts for children. 4,062,091, Cl. 24-230.00R.
Holset Engineering Company Limited: *See—*
Evans, Raymond Dennis, 4,062,432, Cl. 192-58.00B.
Holstein and Kappert Aktiengesellschaft: *See—*
Jendrichowski, Klaus, 4,062,441, Cl. 198-480.000.
Holtkamp, Donald A.: *See—*
Chichester, Willard L.; and Holtkamp, Donald A., 4,062,269, Cl. 91-400.000.
Holtschmidt, Ulrich; and Schwarzmann, Gunter, to Th. Goldschmidt AG. Quaternary imidazole compounds as microbicides. 4,062,965, Cl. 424-273.00R.
Holtz, Gilbert J. Collapsible baggage cart. 4,062,565, Cl. 280-655.000.
Holzinger, Carl S.: *See—*
Purinton, Edwin C.; Holzinger, Carl S.; and Auger, Robert, 4,063,230, Cl. 340-280.000.
Holzkamp, Erhard: *See—*
Ziegler, Karl, deceased; Breil, Heinz; Holzkamp, Erhard; and Martin, Heinz, 4,063,009, Cl. 526-159.000.
Homan, Frank R.: *See—*
Snow, Barton H.; and Homan, Frank R., 4,062,186, Cl. 60-226.00R.
Honda Giken Kogyo Kabushiki Kaisha: *See—*
Matsuda, Minoru; Otani, Junji; Kaji, Kenzo; and Masumura, Masanori, 4,062,333, Cl. 123-119.00C.
Honeywell: *See—*
Handly, Robert J.; and Douglas, Robert H., 4,063,081, Cl. 235-312.000.
Hooker Chemicals & Plastics Corporation: *See—*
Falvo, Ralph, 4,062,753, Cl. 204-266.000.
Quinn, Edward J., 4,063,004, Cl. 428-626.000.
Horowitz, Fred, to Port Authority of N.Y. & N.J., The. Air handling method and system. 4,062,400, Cl. 165-2.000.
Hoshimi, Susumu; and Sato, Toshio, to Sony Corporation. Electric braking apparatus for alternating current motors. 4,063,137, Cl. 318-212.000.
Hosoi, Kameo: *See—*
Yoshida, Toru; Hosoi, Kameo; Yoshida, Tokuzo; Shimizu, Kazuyuki; and Nakagawa, Koithiro, 4,062,129, Cl. 34-80.000.
Hosokawa, Yoshikazu: *See—*
Okuhara, Shinzi; Hosokawa, Yoshikazu; Kamei, Tatsuya; and Suzuki, Masayoshi, 4,063,115, Cl. 307-252.00G.
Hotsy Corporation, The: *See—*
Conlee, George D., 4,062,639, Cl. 417-404.000.
Hotta, Hisashi; and Mori, Fumio, to Toyo Seikan Kaisha Limited. Olefin resin-metal bonded structure. 4,062,997, Cl. 428-378.000.
Hovel, Harold John: *See—*
Blakeslee, A. Eugene; and Hovel, Harold John, 4,062,698, Cl. 136-89.0PC.
Hovmand, Svend; and Sorensen, Erik Dankvard, to A/S Niro Atomizer. Agglomeration unit. 4,062,641, Cl. 425-6.000.
Howard, Kent A.; Winter, William E., Jr.; Moritz, Karsten H.; and Paynter, John D. Process for desulfurizing and blending naphtha. 4,062,762, Cl. 208-211.000.
Howmet Turbine Components Corporation: *See—*
Lirones, Nick G., 4,062,399, Cl. 164-338.00M.
Hsia, Yukun, to McDonnell Douglas Corporation. MNOS Memory device. 4,063,267, Cl. 357-23.000.
Hsiung, Du Yung, to Scholl, Inc. Insoles for footwear. 4,062,131, Cl. 36-44.000.
Hucker, David J.; and Schmitz, Norbert L., to Sundstrand Corporation. Inverter for providing a sinusodial output having a low harmonic content. 4,063,144, Cl. 363-43.00A.
Hudson, Frederick W.: *See—*
Gundlach, Robert W.; and Hudson, Frederick W., 4,063,051, Cl. 200-61.130.
Huff, George L., to Metals Engineering Incorporated. Outdoor grill. 4,062,340, Cl. 126-25.00R.
Hughes Aircraft Company: *See—*
Abrams, Richard L.; and Yariv, Amnon, 4,063,195, Cl. 332-7.510.
Cousins, Charles, 4,062,164, Cl. 52-489.000.
Goodwin, Frank E.; and Nussmeier, Thomas A., 4,063,084, Cl. 250-199.000.
Zurcher, Rudolf F., 4,062,181, Cl. 58-152.00R.
Hughes, John Lawrence; Seyler, Jay Kenneth; and Liu, Robert Chung-Huang, to Armour Pharmaceutical Company. Resin peptides. 4,062,815, Cl. 260-8.000.
Hughes, Richard Henry, to RCA Corporation. Cathode support structure for color picture tube guns to equalize cutoff relation during warm-up. 4,063,128, Cl. 313-409.000.
Huguenin, Raymond; Matthey, Hubert; and Voumard, Martial, to Scciete Suisse pour l'Industrie Horlogere Management Services S.A. Process for automatically adjusting the frequency of piezoelectric resonators in the form of bars or plates. 4,062,154, Cl. 51-319.000.
Hujita, Jihei: *See—*
Takahara, Ichiro; Yabu, Tadahiko; and Hujita, Jihei, 4,063,286, Cl. 358-128.000.
Humber, Leslie G.: *See—*
Pelz, Karel; Bruderlein, Francois T.; and Humber, Leslie G., 4,062,851, Cl. 260-289.00C.
Hume, Keith: *See—*
Kyte, Colin Trevor; Lewis, Geoffrey John; Pearce, Edgar; and Hume, Keith, 4,062,991, Cl. 427-297.000.
Humphries, Joseph Roger: *See—*
Bevilacqua, Frank; and Humphries, Joseph Roger, 4,062,725, Cl. 176-86.00R.
Hunsicker, William Robert. Coin telephone system having restricted coin-free dialing capability. 4,063,036, Cl. 179-6.30R.
Hunter, Robert O., Jr. Low impedance electron-beam controlled discharge switching system. 4,063,130, Cl. 315-150.000.
Hurt, Bernard: *See—*
Tran, Duc Tien; Kervizic, Jacques; and Hurt, Bernard, 4,063,125, Cl. 313-62.000.
Huryn, William Andrew, to Bell Telephone Laboratories, Incorporated. Key telephone system multilink hands free answer circuit. 4,063,047, Cl. 179-99.000.
Hutchinson, Florence M., executrix: *See—*
Hutchinson, William Milton, deceased, 4,062,795, Cl. 252-171.000.
Hutchinson, Francis Gowland; Henbest, Richard George Cleveland; and Leggett, Margaret Kenley, to Imperial Chemical Industries Limited. Polymeric shaped articles. 4,062,826, Cl. 260-40.0TN.
Hutchinson, William Milton, deceased (by Hutchinson, Florence M., executrix), to Phillips Petroleum Company. Azeotropes of 1,2-dichloro-1,1,2-trifluoroethane. 4,062,795, Cl. 252-171.000.
Hutson, Jearld L. Semiconductor switch having sensitive gate characteristics at high temperatures. 4,063,278, Cl. 357-38.000.
Hycel, Inc.: *See—*
Hennessy, James William; and Turner, Bruce Munson, 4,063,309, Cl. 364-555.000.
Lape, Larry J., 4,062,651, Cl. 23-253.0PC.
Hyde, Michael B.; and Bianchi, Raymond A., to Caterpillar Tractor Co. Backup alarm activation mechanism for power shift tractors. 4,063,217, Cl. 340-70.000.
Iato, Michel: *See—*
Soulie, Guy; and Iato, Michel, 4,062,402, Cl. 166-.600.
Ichikawa Woolen Textile Co., Ltd.: *See—*
Nakamura, Shoichi; and Sasaki, Shigeaki, 4,062,779, Cl. 210-386.000.
Ichikawa, Yasuhiko; and Hayakawa, Fumiyasu, to Konishiroku Photo Industry Co., Ltd. Sheet handling of a copying machine. 4,062,631, Cl. 355-3.00R.
Ida, Hisashi: *See—*
Murakami, Masuo; Takahashi, Kozo; Murase, Kiyoshi; Mase, Toshiyasu; Ida, Hisashi; and Takenaka, Toichi, 4,063,025, Cl. 560-29.000.
Idei, Gijun, to Tokyo Shibaura Electric Co., Ltd. Constant voltage circuit. 4,063,120, Cl. 307-297.000.
Igarashi, Keiichi: *See—*
Yoshimoto, Takeo; Igarashi, Keiichi; Harayama, Takeo; Ura, Masaaki; Toyama, Teruhiko; Morikawa, Osamu; Takasawa, Yoshio; and Hojo, Yoshikata, 4,062,896, Cl. 260-613.00R.
Ignatiev, Vladimir Vasilievich: *See—*
Basov, Nikolai Gennadievich; Berezhnoi, Igor Alexandrovich; Vekshin, Vyacheslav Sergeevich; Danilychev, Vladimir Alexandrovich; Elatontsev, Albert Ivanovich; Ignatiev, Vladimir Vasilievich; Karyshev, Vitaly Dmitrievich; and Togulev, Alexandr Konstantinovich, 4,063,218, Cl. 340-26.000.
Iida, Mikio, to Sony Corporation. Raster distortion correction circuit. 4,063,134, Cl. 315-371.000.
IMC Chemical Group, Inc.: *See—*
Shipchandler, Mohammed T., 4,062,970, Cl. 424-279.000.
Imperial Chemical Industries Limited: *See—*
Hutchinson, Francis Gowland; Henbest, Richard George Cleveland; and Leggett, Margaret Kenley, 4,062,826, Cl. 260-40.0TN.
Skilling, Derek, 4,062,916, Cl. 264-95.000.
Imris, Pavel. Method and apparatus for producing ozone. 4,062,748, Cl. 204-176.000.
Inaba, Naomi: *See—*
Ueno, Hiroshi; Inaba, Naomi; Makishima, Tokuo; and Wada, Shozo, 4,062,804, Cl. 252-429.00B.
Inai, Yuichi: *See—*
Kijima, Shizumasa; Yamatsu, Isao; Minami, Norio; and Inai, Yuichi, 4,062,879, Cl. 260-396.00R.

Indiana University Foundation: *See—*
Appelman, Dudley Ralph; Link, David Allen; and Stout, Gerald Louret, 4,063,035, Cl. 179-1.0SP.
Industrial Analytics Inc.: *See—*
Leonard, Ralph R.; and Taylor, Ted J., 4,062,203, Cl. 64-29.000.
Industrial Coils, Inc.: *See—*
Enge, Harald A., 4,063,098, Cl. 250-396.00R.
Industrial Research Products, Inc.: *See—*
Carlson, Elmer V.; and Killion, Mead C., 4,063,050, Cl. 179-111.00E.
Peters, Richard W., 4,063,034, Cl. 179-1.00J.
Industrie Pirelli S.p.A.: *See—*
Manini, Silvio; and Pacciarini, Antonio, 4,062,458, Cl. 214-16.40R.
Inner-Tite, a division of Yara Engineering Corporation: *See—*
Davis, George W., 4,062,572, Cl. 285-55.000.
Inoue, Hajime: *See—*
Hatanaka, Kyohei; Inoue, Hajime; Hisatomi, Haruya; Okuda, Koya; Suzuki, Takeshi; Murao, Mikio; and Utiyama, Susumu, 4,062,667, Cl. 65-135.000.
Inoue, Kosuke: *See—*
Tashiro, Joji; Kawanabe, Tadahiko; Araki, Noboru; Ashihara, Kazuo; Ando, Toshio; Hiragi, Sadayuki; Itoh, Kazuo; Ozawa, Yukio; Odera, Eiichi; and Inoue, Kosuke, 4,063,043, Cl. 179-18.0EA.
Inoue, Nobuyoshi, to Copal Company Limited. Shutter blade assembly for focal plane shutters. 4,063,262, Cl. 354-246.000.
Institut Dr. Friedrich Forster, Prufgeratebau: *See—*
Haberlein, Peter, 4,063,159, Cl. 324-260.000.
Institut Francais du Petrole: *See—*
Franck, Jean-Pierre; and Le Page, Jean-Francois, 4,062,805, Cl. 252-430.000.
Lesage, Jean, 4,062,822, Cl. 260-29.40R.
Institute Po Metaloobrabotvashti Machini: *See—*
Nakov, Vesselin Nachev; and Nikolov, Emanuil Hristov, 4,062,444, Cl. 198-648.000.
International Business Machines Corporation: *See—*
Alcorn, George Edward; Feeley, James Downer; and Lyman, Julian Turner, 4,062,720, Cl. 156-643.000.
Bahr, Dietrich Juergen; and Burckardt, Karl Heinz, 4,063,255, Cl. 346-139.00C.
Barclay, Donald John; and Morgan, William Morris, 4,062,737, Cl. 204-43.00R.
Blakeslee, A. Eugene; and Hovel, Harold John, 4,062,698, Cl. 136-89.0PC.
Collins, Clive A.; and Sollitto, Vincent F., 4,063,308, Cl. 364-200.000.
Das Gupta, Sumit; and Eichelberger, Edward Baxter, 4,063,078, Cl. 364-700.000.
Delarue, Gerard Jean-Marie; and Verhaeghe, Michel Paul, 4,063,070, Cl. 235-474.000.
Eichelberger, Edward Baxter; Muehldorf, Eugene Igor; Walther, Ronald Gene; and Williams, Thomas Walter, 4,063,080, Cl. 235-302.000.
Faure, Louis Henry; Johnston, Howard Thomas, Jr.; and Townsend, Dana Roberts, 4,063,172, Cl. 324-158.00P.
Feierabend, Louis B.; and Luhrs, Otto R., 4,062,659, Cl. 51-281.00R.
Fox, Sidney Jared; and Martin, Van Clifton, 4,063,254, Cl. 346-75.000.
Jensen, Donald Frederick; Tamulis, John Carl; Tomasky, Thomas; and Zable, Jack Louis, 4,063,252, Cl. 346-75.000.
Nussbaumer, Henri, 4,063,082, Cl. 364-728.000.
Schlig, Eugene Stewart; and Stilwell, George Raymond, Jr., 4,063,223, Cl. 365-116.000.
International Flavors & Fragrances Inc.: *See—*
Sprecker, Mark A.; Vock, Manfred Hugo; Schmitt, Frederick Louis; Hall, John B.; and Sanders, James Milton, 4,062,894, Cl. 260-586.00R.
International Harvester Company: *See—*
Rudny, Donald F.; and Lindstedt, Dennis H., 4,062,401, Cl. 165-125.000.
International Nickel Company, Inc., The: *See—*
Glaum, Gerald Vernon; O'Neill, Charles Edward; and Subramanian, Kohur Nagaraja, 4,062,924, Cl. 423-150.000.
International Paper Company: *See—*
Mate, Zoltan, 4,062,818, Cl. 260-17.00R.
International Standard Electric Corporation: *See—*
Le Cain, Yves Dominique; Nagati, Ali; and Pellet, Bruno A. F., 4,063,127, Cl. 313-325.000.
Odell, Alexander D.; Young, John M.; and Arton, Kenneth A. M., 4,063,119, Cl. 307-279.000.
Odell, Alexander Douglas, 4,063,113, Cl. 307-205.000.
Overbury, Francis G.; and Barton, Paul, 4,063,242, Cl. 343-100.0SA.
International Telephone and Telegraph Corporation: *See—*
Sawyer, Edgar W., Jr., 4,062,694, Cl. 106-309.000.
Steensma, Peter Dennis, 4,062,618, Cl. 350-3.500.
International Video Corporation: *See—*
Vidovic, Nikola; and Guisinger, Barrett E., 4,063,279, Cl. 358-19.000.
Intichar, Lutz: *See—*
Kullmann, Dieter; and Intichar, Lutz, 4,063,122, Cl. 310-64.000.
Ionics, Inc.: *See—*
Jha, Anil D.; and Ganzi, Gary C., 4,062,756, Cl. 204-301.000.
Irick, Gether, Jr.; Kelly, Charles A.; and Martin, James C., to Eastman Kodak Company. Bichromophoric benzoxazole-styrene ester and amide ultraviolet stabilizers and their use in organic compositions. 4,062,800, Cl. 252-402.000.
Isbister, Eric J.; Klepach, Robert J.; Riggs, Robert F.; and Tucker, Terry A., to Sperry Rand Corporation. Electronic docking system. 4,063,240, Cl. 343-9.000.
Iseda, Yutaka: *See—*
Watabe, Yoji; Ishii, Michio; and Iseda, Yutaka, 4,062,825, Cl. 260-37.00N.
Ishida, Minoru; and Komiyama, Kenzi, to Feather Safety Razor Co., Ltd. Scissors with sheath type replaceable blades. 4,062,113, Cl. 30-260.000.
Ishii, Kitae, to Merril Hermanson. Double handled bag - foldable to two sizes. 4,062,392, Cl. 150-1.700.
Ishii, Michio: *See—*
Watabe, Yoji; Ishii, Michio; and Iseda, Yutaka, 4,062,825, Cl. 260-37.00N.
Ishikawayima-Harima Jukogyo Kabushiki Kaisha: *See—*
Fujino, Yoshiharu; Chiba, Iwane; Chiyonobu, Toshimi; Takahata, Tomihisa; and Kachi, Yasuhiko, 4,063,061, Cl. 219-101.000.
Ishizuka, Ichiro: *See—*
Yukinaga, Hisajiro; Sumimoto, Shinzaburo; Ishizuka, Ichiro; and Sugita, Jitsuo, 4,062,861, Cl. 260-307.00H.
Itaya, Nobushige: *See—*
Fujimoto, Keimei; Ohno, Nobuo; Okuno, Yoshitoshi; Mizutani, Toshio; Ohno, Isao; Hirano, Masachika; Itaya, Nobushige; and Matsuo, Takashi, 4,062,968, Cl. 424-275.000.
Ito, Syoichi; and Tsubaki, Toshio, to Hitachi, Ltd. Ink jet recording apparatus. 4,063,253, Cl. 346-75.000.
Itoh, Kazuo: *See—*
Tashiro, Joji; Kawanabe, Tadahiko; Araki, Noboru; Ashihara, Kazuo; Ando, Toshio; Hiragi, Sadayuki; Itoh, Kazuo; Ozawa, Yukio; Odera, Eiichi; and Inoue, Kosuke, 4,063,043, Cl. 179-18.0EA.
Itokawa, Natsuo: *See—*
Yasujima, Nobuo; Itokawa, Natsuo; and Arai, Juichiro, 4,063,211, Cl. 338-308.000.
Itria, Oswald A.; and Todd, James D., to Texaco Inc. Methods for accurately positioning a seismic energy source while recording seismic data. 4,063,213, Cl. 340-7.0PC.
Iwaoka, Hideto: *See—*
Ohte, Akira; Iwaoka, Hideto; and Araragi, Muneki, 4,063,150, Cl. 324-.50R.
Iwata, Ichiro: *See—*
Takada, Shingo; and Iwata, Ichiro, 4,062,923, Cl. 423-11.000.
Izawa, Tatsuo; Miyashita, Tadashi; and Hanawa, Fumiaki, to Nippon Telegraph and Telephone Public Corporation. Continuous optical fiber preform fabrication method. 4,062,665, Cl. 65-3.00A.
J. I. Case Company: *See—*
Bentrup, Otto Theodore, 4,062,407, Cl. 169-47.000.
Draney, Robert Gene, 4,062,588, Cl. 297-385.000.
Jackson Vibrators, Inc.: *See—*
Derler, Charles J., 4,062,292, Cl. 104-12.000.
Jacobs, David R.: *See—*
Spanel, Abram N.; Eiland, P. Frank; and Jacobs, David R., 4,062,308, Cl. 112-79.00A.
Jacobs, Lawrence O'Quinn, to Plastic Products, Inc. Pulley lift assembly and curtain system employing same. 4,062,519, Cl. 254-141.000.
Jacobson, Robert L., to Chevron Research Company. Process for isomerizing alkylaromatics. 4,062,903, Cl. 260-668.00A.
Jaffe, Wolfgang: *See—*
Herr, John Addison; and Jaffe, Wolfgang, 4,063,123, Cl. 310-270.000.
Jager, Horst; and Klauke, Erich, to Bayer Aktiengesellschaft. Preparation and oxidation of 4-acylamino-anthrones. 4,062,875, Cl. 260-351.000.
Jain, Ravinder Kumar: *See—*
Ashkin, Arthur; Jain, Ravinder Kumar; Lin, Chinlon; and Stolen, Rogers Hall, 4,063,106, Cl. 307-88.300.
James, Barrie Sidney; and Wyszynski, Apolonious, to W. Canning Limited. Electroplating zinc or cadmium and additive composition therefor. 4,062,739, Cl. 204-50.00Y.
James, James Roderick; and Wilson, Geoffrey John, to United Kingdom of Great Britain and Northern Ireland, The Secretary of State for Defence in Her Britannic Majesty's Government of the. Microstrip antenna arrays. 4,063,245, Cl. 343-700.0MS.
James L. Taylor Mfg. Co.: *See—*
Mortoly, John L., 4,062,320, Cl. 118-239.000.
Jameson, James J., to Gardner-Denver Company. Power transmission with modulating torque converter input clutch. 4,062,431, Cl. 192-3.330.
Jansen, Walter: *See—*
Altenhoner, Klaus; Jansen, Walter; Knop, Klaus; and Reering, Jan G., 4,062,529, Cl. 266-156.000.
Japan Atomic Energy Research Institute: *See—*
Hagiwara, Miyuki; Sohara, Masayoshi; Araki, Kunio; and Kagiya, Tsutomu, 4,062,998, Cl. 428-380.000.
Japan Exlan Company Limited: *See—*
Kobashi, Toshiyuki; Ozaki, Masahiko; and Ono, Kenichi, 4,062,857, Cl. 260-29.6AN.
Jardin, Hans; and Ofner, Johann, to Webasto-Werk W. Baier GmbH & Co. Elongate cylindrical members securement. 4,062,636, Cl. 403-13.000.
Jarl, Carl-Johan Paul. Arrangement for sensing the rotary movement of a rotary means. 4,062,249, Cl. 74-414.000.
Jendrichowski, Klaus, to Holstein and Kappert Aktiengesellschaft. Apparatus for conveying bottles. 4,062,441, Cl. 198-480.000.

Jenkins, Christopher Robert: *See*—
Crellin, Robin Arthur; Jenkins, Christopher Robert; and Phelpstead, James William Percy, 4,062,368, Cl. 131-265.000.
Jenner, Michael D.: *See*—
Blackman, Maurice V.; and Jenner, Michael D., 4,062,107, Cl. 29-628.000.
Jennings, Robert Newton; Murray, John; and Hartleben, Donald Herbert. Sliding glass window and door lock. 4,062,576, Cl. 292-258.000.
Jensen, Donald Frederick; Tamulis, John Carl; Tomasky, Thomas; and Zable, Jack Louis, to International Business Machines Corporation. Method and apparatus for controlling the velocity of ink drops in an ink jet printer. 4,063,252, Cl. 346-75.000.
Jensen, Ronald N., to United States of America, National Aeronautics and Space Administration. Solar heating system. 4,062,347, Cl. 126-270.000.
Jepson, John W.: *See*—
Lynch, Francis deSales; Reid, Walter L., Jr.; and Jepson, John W., 4,063,259, Cl. 354-120.000.
Jeremiah, Edward Scott; Schubeler, Kenneth Erwin; and Kline, Eric Randall, to Cincinnati Milacron Inc. Asynchronously operating signal diagnostic system for a programmable machine function controller. 4,063,311, Cl. 364-900.000.
Jha, Anil D.; and Ganzi, Gary C., to Ionics, Inc. Liquid flow distribution screen. 4,062,756, Cl. 204-301.000.
Johansson, Ernst Elof Ake: *See*—
Carlsson, Jan-Olov; Johansson, Ernst Elof Ake; and Pahlen, Lars Christer, 4,062,611, Cl. 339-17.00M.
John Fluke Manufacturing Company, Inc.: *See*—
Palmer, Roger C., 4,063,169, Cl. 324-79.00D.
John Wyeth & Brother Limited: *See*—
Weston, George Oliver, 4,062,869, Cl. 260-326.160.
Johnson, David G.; and Thorson, Robert D., to Minnesota Mining and Manufacturing Company. Food heating and cooking receptacle. 4,063,068, Cl. 219-441.000.
Johnson, Janice R.: *See*—
Schrantz, Robert D.; and Johnson, Janice R., 4,062,568, Cl. 283-66.00R.
Johnson & Johnson: *See*—
Gander, Robert J., 4,062,451, Cl. 206-524.200.
Korpman, Ralf, 4,062,995, Cl. 428-134.000.
Johnson, Lennart B., to Teradyne, Inc. Electrical test connector apparatus. 4,062,617, Cl. 339-75.00M.
Johnson, Phyllis. Backrest for bedpans. 4,062,069, Cl. 4-1.000.
Johnson, Robert C., to Reynolds Leasing Corporation. Tiered container with flow distribution system. 4,062,367, Cl. 131-134.000.
Johnson, Robert H. Range or doppler gate deception rejection system. 4,063,239, Cl. 343-8.000.
Johnston, Howard Thomas, Jr.: *See*—
Faure, Louis Henry; Johnston, Howard Thomas, Jr.; and Townsend, Dana Roberts, 4,063,172, Cl. 324-158.00P.
Jolivet, Yannick; and Lachevre, Christian, to Compagnie Francaise de Raffinage. N-Substituted acrylamidines, copolymers of N-substituted acrylamidines and esters of acrylic and methacrylic acid and uses of the copolymers. 4,062,787, Cl. 252-51.50A.
Jones, Charles, to Curtiss-Wright Corporation. Rotary engine with rotary intake valve. 4,062,326, Cl. 123-8.090.
Jones, Gerald Dovaston, to Precision Valve Corporation. Body for dispenser valve. 4,062,517, Cl. 251-322.000.
Jongsma, Hendrik Marten: *See*—
Vos, Cornelis; Den Admirant, Jacobus; van Os, Jan Lambert; Jongsma, Hendrik Marten; and Kooreman, Hermanus Jacobus, 4,062,948, Cl. 424-180.000.
Joslyn Mfg. and Supply Co.: *See*—
Pardis, Robert J., 4,063,161, Cl. 324-52.000.
Jouanno, Rene-Jean. Radar reflector. 4,063,241, Cl. 343-18.00B.
Joy Manufacturing Company: *See*—
Hibbard, George A., 4,062,268, Cl. 91-165.000.
Juhas, Joseph Aloysius, to Torrington Company, The. Method of forming end flanges. 4,062,701, Cl. 148-12.100.
Junge, Bodo: *See*—
Frommer, Werner; Junge, Bodo; Keup, Uwe; Muller, Lutz; Puls, Walter; and Schmidt, Delf, 4,062,950, Cl. 424-181.000.
K A Bergs Smide AB: *See*—
Fredriksson, Lars Olof Arne, 4,062,088, Cl. 24-73.0HR.
K-Jack Engineering Company, Inc.: *See*—
Chalabian, Jack S., 4,062,435, Cl. 194-54.000.
K-Krete, Inc.: *See*—
Brewer, William E.; and Zimmer, Franklin V., 4,062,195, Cl. 61-72.400.
Kabushiki Kaisha Daini Seikosha: *See*—
Koike, Yuji, 4,062,179, Cl. 58-23.00R.
Kabushiki Kaisha Japan Metal Finishing Co.: *See*—
Fujita, Shigeru; Murayama, Koichi; Kaneda, Toyohito; Harada, Susumu; and Ueda, Toshio, 4,062,742, Cl. 204-55.00R.
Kabushiki Kaisha Komatsu Seisakusho: *See*—
Satsumabayashi, Kazuyoshi; Yoshihashi, Akira; Kato, Takeshi; and Omote, Osamu, 4,062,550, Cl. 277-92.000.
Tetsuka, Iwao; Kato, Kusuo; Takahashi, Yasuyuki; and Sano, Tomoharu, 4,062,539, Cl. 172-9.000.
Kabushiki Kaisha Maekawa Seisakusho: *See*—
Kasahara, Keisuke; Hamaoka, Sachio; Katori, Youichi; and Mizuno, Takaharu, 4,062,199, Cl. 62-197.000.
Kabushiki Kaisha Suwa Seikosha: *See*—
Kawabata, Yosei, 4,062,244, Cl. 74-54.000.
Kawabata, Yousei, 4,062,488, Cl. 234-115.000.
Morozumi, Shinji, 4,063,114, Cl. 307-225.00C.
Sakamoto, Motoyoshi, 4,062,178, Cl. 58-23.00R.
Kabushiki Kaisha Toyoda Jidoshokki Seisakusho: *See*—
Kato, Takashi; Yoshizawa, Toshio; Suzuki, Yoshihisa; and Ueda, Shozo, 4,062,439, Cl. 198-470.000.
Kabushiki Kaisha Yaskawa Denki Seisakusho: *See*—
Fujiwara, Kazushi; Asai, Mituyuki; and Aoki, Susumu, 4,063,203, Cl. 335-154.000.
Kachi, Yasuhiko: *See*—
Fujino, Yoshiharu; Chiba, Iwane; Chiyonobu, Toshimi; Takahata, Tomihisa; and Kachi, Yasuhiko, 4,063,061, Cl. 219-101.000.
Kadota, Masahiro, to Toyota Jidosha Kogyo Kabushiki Kaisha. Fuel-saving traveling system for an internal combustion engine-driven vehicle. 4,062,419, Cl. 180-70.00R.
Kagata, Akira, to Matsushita Electric Industrial Co., Ltd. Pickup arm lifting device. 4,062,548, Cl. 274-23.00B.
Kagiya, Tsutomu: *See*—
Hagiwara, Miyuki; Sohara, Masayoshi; Araki, Kunio; and Kagiya, Tsutomu, 4,062,998, Cl. 428-380.000.
Kahn, Michael E.: *See*—
Rando, Joseph F.; Kahn, Michael E.; Heumann, Thomas E.; and Luebbers, Scott S., 4,062,634, Cl. 356-248.000.
Kaiser Aluminum & Chemical Corporation: *See*—
Ducote, Hebon J., 4,062,696, Cl. 134-1.000.
Kaiser, Carl; and Pendleton, Robert G., to SmithKline Corporation. Pharmaceutical compositions and methods of inhibiting phenylethanolamine N-methyltransferase. 4,062,961, Cl. 424-258.000.
Kaiser, Karl: *See*—
Kuxdorf, Bernhard; Kaiser, Karl; and Wissel, Kurt, 4,062,662, Cl. 55-206.000.
Kaji, Kenzo: *See*—
Matsuda, Minoru; Otani, Junji; Kaji, Kenzo; and Masumura, Masanori, 4,062,333, Cl. 123-119.00C.
Kalal, Jaroslav: *See*—
Kopecek, Jinrich; Ulbrich, Karel; Vacik, Jiri; Strohalm, Jiri; Chytry, Vladimir; Drobnik, Jaroslav; and Kalal, Jaroslav, 4,062,831, Cl. 260-47.0UA.
Kalb, William: *See*—
Hawthorne, M. Frederick; and Kalb, William, 4,062,883, Cl. 260-429.00R.
Kaluza, Hans-Joachim: *See*—
Brauner, Dieter; Kaluza, Hans-Joachim; and Muschelknautz, Edgar, 4,062,524, Cl. 366-340.000.
Kamei, Tatsuya: *See*—
Okuhara, Shinzi; Hosokawa, Yoshikazu; Kamei, Tatsuya; and Suzuki, Masayoshi, 4,063,115, Cl. 307-252.00G.
Kameny, Stanley L. Apparatus for generating applied electrical stimuli signals. 4,062,365, Cl. 128-422.000.
Kamerer, George Roy: *See*—
Harbert, Donald Duane; and Kamerer, George Roy, 4;063,033, Cl. 179-1.00P.
Kaminski, Stephen H. Can crusher. 4,062,283, Cl. 100-218.000.
Kammerer, Leo P.; Fabian, Gordon R.; and Burns, Roger D., to Rockwell International Corporation. Method and apparatus for limiting position servo authority. 4,063,140, Cl. 318-561.000.
Kaneda, Toyohito: *See*—
Fujita, Shigeru; Murayama, Koichi; Kaneda, Toyohito; Harada, Susumu; and Ueda, Toshio, 4,062,742, Cl. 204-55.00R.
Karsh, Irving, to Bell & Howell Company. Integral retained file protect means. 4,063,292, Cl. 360-60.000.
Karyshev, Vitaly Dmitrievich: *See*—
Basov, Nikolai Gennadievich; Berezhnoi, Igor Alexandrovich; Vekshin, Vyacheslav Sergeevich; Danilychev, Vladimir Alexandrovich; Elatontsev, Albert Ivanovich; Ignatiev, Vladimir Vasilievich; Karyshev, Vitaly Dmitrievich; and Togulev, Alexandr Konstantinovich, 4,063,218, Cl. 340-26.000.
Kasahara, Keisuke; Hamaoka, Sachio; Katori, Youichi; and Mizuno, Takaharu, to Kabushiki Kaisha Maekawa Seisakusho. Refrigerating apparatus. 4,062,199, Cl. 62-197.000.
Kato, Kusuo: *See*—
Tetsuka, Iwao; Kato, Kusuo; Takahashi, Yasuyuki; and Sano, Tomoharu, 4,062,539, Cl. 172-9.000.
Kato, Masao, to Director-General of the Agency of Industrial Science and Technology. Selenium-containing polymers and process for producing same. 4,063,008, Cl. 526-47.000.
Kato, Takashi; Yoshizawa, Toshio; Suzuki, Yoshihisa; and Ueda, Shozo, to Kabushiki Kaisha Toyoda Jidoshokki Seisakusho; and Daiwa Boseki Kabushiki Kaisha. Apparatus for transporting yarn packages produced by a textile machine. 4,062,439, Cl. 198-470.000.
Kato, Takeshi: *See*—
Satsumabayashi, Kazuyoshi; Yoshihashi, Akira; Kato, Takeshi; and Omote, Osamu, 4,062,550, Cl. 277-92.000.
Katori, Youichi: *See*—
Kasahara, Keisuke; Hamaoka, Sachio; Katori, Youichi; and Mizuno, Takaharu, 4,062,199, Cl. 62-197.000.
Katusha, Jerome Mark; and Flamini, Stephen James, to Eastman Kodak Company. Toner handling apparatus. 4,062,385, Cl. 141-89.000.
Kaufhold, Frederick Daniel: *See*—
Ericson, Eric Axel; and Kaufhold, Frederick Daniel, 4,063,305, Cl. 361-339.000.
Kaufmann, Herbert O.; and Schaeffer, John I., to Swim 'n Play, Inc. Prefabricated swimming pool construction. 4,062,158, Cl. 52-71.000.
Kaul, Pradman; and Gabbard, Ova Gene, to Digital Communications Corporation. Error coding communication terminal interface. 4,063,038, Cl. 179-15.0BA.
Kawabata, Yosei, to Kabushiki Kaisha Suwa Seikosha. Punch device for card coding assembly. 4,062,244, Cl. 74-54.000.

Kawabata, Yousei, to Kabushiki Kaisha Suwa Seikosha. Mechanisms for producing precisely-timed intermittent operations. 4,062,488, Cl. 234-115.000.
Kawakami, Hideaki; Yoneda, Yutaka; Nagae, Yoshiharu; and Kitazima, Masaaki, to Hitachi, Ltd. Liquid crystal display device. 4,062,626, Cl. 350-160.0LC.
Kawanabe, Tadahiko: *See*—
Tashiro, Joji; Kawanabe, Tadahiko; Araki, Noboru; Ashihara, Kazuo; Ando, Toshio; Hiragi, Sadayuki; Itoh, Kazuo; Ozawa, Yukio; Odera, Eiichi; and Inoue, Kosuke, 4,063,043, Cl. 179-18.0EA.
Kawasaki Jukogyo Kabushiki Kaisha: *See*—
Hatanaka, Kyohei; Inoue, Hajime; Hisatomi, Haruya; Okuda, Koya; Suzuki, Takeshi; Murao, Mikio; and Utiyama, Susumu, 4,062,667, Cl. 65-135.000.
Kay, Francis Xavier. Pipe joints. 4,062,569, Cl. 285-4.000.
Kaye, Joshua Morley. Device for use in evaluating the lower leg and foot. 4,062,355, Cl. 128-2.00S.
Keafer, Lloyd S., Jr.; Burcher, Ernest E.; and Kopia, Leonard P., to United States of America, National Aeronautics and Space Administration. Transmitting and reflecting diffuser. 4,062,996, Cl. 428-334.000.
Keeling, Tracy: *See*—
Harmon, Thomas; and Keeling, Tracy, 4,062,525, Cl. 366-138.000.
Kelley, Stephen F.: *See*—
Gilbert, Herman S.; and Kelley, Stephen F., 4,062,832, Cl. 260-47.0EP.
Kelly, Charles A.: *See*—
Irick, Gether, Jr.; Kelly, Charles A.; and Martin, James C., 4,062,800, Cl. 252-402.000.
Kemp, Dennis E., Jr.; and Wright, Walter Olden, to Application Dynamics, Inc. Grinding mill system having proportioning feeder. 4,062,497, Cl. 241-34.000.
Kemp, Dennis E., Jr., to Application Dynamics, Inc. Self-compensating rotary seal for vertical drive shaft. 4,062,549, Cl. 277-12.000.
Kendall Company, The: *See*—
Davenport, Stanley; and Villari, Frank K., 4,062,068, Cl. 2-421.000.
Kennedy, Richard W.: *See*—
Boah, John K.; and Kennedy, Richard W., 4,063,272, Cl. 357-50.000.
Kepes, William E.: *See*—
Kovatch, George N.; Vaill, Ronald E.; and Kepes, William E., 4,062,465, Cl. 214-516.000.
Kervizic, Jacques: *See*—
Tran, Duc Tien; Kervizic, Jacques; and Hurt, Bernard, 4,063,125, Cl. 313-62.000.
Keunecke, Gerhard: *See*—
Gehrken, Hubert; and Keunecke, Gerhard, 4,062,871, Cl. 260-346.400.
Keup, Uwe: *See*—
Frommer, Werner; Junge, Bodo; Keup, Uwe; Muller, Lutz; Puls, Walter; and Schmidt, Delf, 4,062,950, Cl. 424-181.000.
Kezuka, Eiji: *See*—
Hattori, Hajime; Okada, Tadashi; and Kezuka, Eiji, 4,063,280, Cl. 358-22.000.
Khananashvili, Lotary Mikhailovich: *See*—
Andrianov, Kuzma Andrianovich; Topchiashvili, Mikhail Izmailovich; Khananashvili, Lotary Mikhailovich; Danilov, Alexei Vladimirovich; Ryabtsev, Evgeny Ivanovich; Pagava, Dali Georgievna; Bodzhgua, Dzhimsher Shalvovich; Grigoriev, Veniamin Demyanovich; and Fridland, Vladimir Mikhailovich, 4,062,813, Cl. 252-511.000.
Khanna, Jai Krishen: *See*—
Cutler, John Frederick; and Khanna, Jai Krishen, 4,062,188, Cl. 60-599.000.
Kibler, Ralph J.: *See*—
Stephens, John A.; and Kibler, Ralph J., 4,062,508, Cl. 244-83.00F.
Kienzle Apparate GmbH: *See*—
Sieber, Manfred; Fichter, Manfred; and Muller, Ingo, 4,063,142, Cl. 318-678.000.
Kijima, Shizumasa; Yamatsu, Isao; Minami, Norio; and Inai, Yuichi, to Eisai Co., Ltd. Process for synthesis of coenzyme Q compounds. 4,062,879, Cl. 260-396.00R.
Kikumoto, Ryoji: *See*—
Okamoto, Shosuke; Kikumoto, Ryoji; Ohkubo, Kazuo; Tonomura, Shinji; and Tamao, Yoshikuni, 4,062,963, Cl. 424-267.000.
Killion, Mead C.: *See*—
Carlson, Elmer V.; and Killion, Mead C., 4,063,050, Cl. 179-111.00E.
Kimball, Philip C.: *See*—
Strauss, Richard; and Kimball, Philip C., 4,062,781, Cl. 210-446.000.
Kimura, Shin; and Terasawa, Yoshio, to Hitachi, Ltd. Semiconductor controlled rectifier device having amplifying gate structure. 4,063,270, Cl. 357-38.000.
Kimura, Turugi: *See*—
Gondo, Hisashi; Nakasugi, Hajime; Kimura, Turugi; and Yamaguti, Masanobu, 4,062,705, Cl. 148-127.000.
King, Gerard J., to United States of America, Army. Silicon-polysilicon infrared image device with orientially etched detector. 4,063,268, Cl. 357-30.000.
Kinney, Lionel L.: *See*—
Bartlett, Harold H., Jr.; Herr, Charles H., Jr.; Kinney, Lionel L.; Lamport, Ivan R.; and Welch, Clarence A., 4,062,234, Cl. 73-135.000.
Kirchner, Richard Karl: *See*—
Mayer, William Norman; Kirchner, Richard Karl; and Andreadakis, Nicholas Cleanthis, 4,063,231, Cl. 340-324.00M.
Kirkpatrick, William James: *See*—
Wilson, Wayne Richard; and Kirkpatrick, William James, 4,062,570, Cl. 285-22.000.
Kirschey, Gunter: *See*—
Fehler, Adolf; and Kirschey, Gunter, 4,062,182, Cl. 60-39.650.
Kirschner, Nikolaus, to Siemens Aktiengesellschaft. Circuit for the production of read-out pulses. 4,063,224, Cl. 365-189.000.
Kishimoto Sangyo Co., Ltd.: *See*—
Hagiwara, Miyuki; Sohara, Masayoshi; Araki, Kunio; and Kagiya, Tsutomu, 4,062,998, Cl. 428-380.000.
Kiss, Pal: *See*—
Harsanyi, Kalman; Takacs, Kalman; Kiss, Pal; Szekeres, Laszlo; Papp, Gyula; and Benedek, Eva, 4,062,850, Cl. 260-286.00R.
Kissiah, Adam M., Jr. Implantable electronic hearing aid. 4,063,048, Cl. 179-107.00R.
Kitaguchi, Ryoichi, to Daishowa Seiki Co., Ltd. Tool-holder chuck. 4,062,552, Cl. 279-1.0TS.
Kitamura, Takehiko: *See*—
Shigeyasu, Motoo; and Kitamura, Takehiko, 4,062,654, Cl. 23-288.00A.
Kitazawa, Shin-ichi: *See*—
Kojima, Teiryo; and Kitazawa, Shin-ichi, 4,062,177, Cl. 57-140.0BY.
Kitazawa, Yoshio, to Nippon Steel Corporation. Apparatus for continuously accumulating a travelling metal strip or wire-like material. 4,062,504, Cl. 242-55.000.
Kitazima, Masaaki: *See*—
Kawakami, Hideaki; Yoneda, Yutaka; Nagae, Yoshiharu; and Kitazima, Masaaki, 4,062,626, Cl. 350-160.0LC.
Klaeren, Aloys: *See*—
Hemmerich, Heinz-Peter; Rosenkranz, Hans Jurgen; Papenroth, Wolfgang; and Klaeren, Aloys, 4,062,692, Cl. 106-300.000.
Klaue, Hermann. Wheel and disk brake assembly for motorcycles. 4,062,427, Cl. 188-18.00A.
Klauke, Erich: *See*—
Jager, Horst; and Klauke, Erich, 4,062,875, Cl. 260-351.000.
Klein, Brigitte I.: *See*—
Klein, Gerhart P.; and Klein, Brigitte I., 4,062,589, Cl. 297-450.000.
Klein, Charles, to United Merchants and Manufacturers, Inc. Apparatus for texturizing flocked fabric. 4,062,093, Cl. 26-2.00R.
Klein, Gerhart P.; and Klein, Brigitte I. Chair with contoured seat. 4,062,589, Cl. 297-450.000.
Klein, Ludolf, to Richton International Corporation. Key case. 4,062,212, Cl. 70-456.00B.
Kleiner, Hans-Jerg: *See*—
Herwig, Walter; and Kleiner, Hans-Jerg, 4,062,828, Cl. 260-45.70P.
Kleinke, Bernard L.: *See*—
Schiffman, Jerome D.; and Kleinke, Bernard L., 4,063,046, Cl. 179-90.00K.
Klepach, Robert J.: *See*—
Isbister, Eric J.; Klepach, Robert J.; Riggs, Robert F.; and Tucker, Terry A., 4,063,240, Cl. 343-9.000.
Klett, Keith Karl; and Alley, Robert Philbrick. Inverter lockout circuit. 4,063,108, Cl. 307-64.000.
Klimaszewski, Chester. Footwear having replaceable heel and sole. 4,062,132, Cl. 36-100.000.
Kline, Eric Randall: *See*—
Jeremiah, Edward Scott; Schubeler, Kenneth Erwin; and Kline, Eric Randall, 4,063,311, Cl. 364-900.000.
Klink, Jerome P.: *See*—
Eisenberg, Arnold J.; Klink, Jerome P.; Symborski, Alex P.; and White, Gerald L., 4,062,501, Cl. 242-18.00G.
Klockner-Humboldt-Deutz Aktiengesellschaft: *See*—
Brachthauser, Kunibert; Ramesohl, Hubert; Beisner, Klaus; and Herchenbach, Horst, 4,062,691, Cl. 106-100.000.
Pfeiffer, Roland; Bongert, Wilhelm; and Waldhecker, Heinz-Dieter, 4,062,127, Cl. 34-1.000.
Klosel, Georg W. Erectable sign for indicating emergency in motor vehicle traffic. 4,062,139, Cl. 40-129.00C.
Knab, James V. Exhaust system for bone cement. 4,062,274, Cl. 98-115.00R.
Knapp, Gordon G.: *See*—
Dubeck, Michael; and Knapp, Gordon G., 4,062,898, Cl. 260-632.00B.
Knapp, Rudolf, to Durr, Otto. Conveyor equipment for surface treatment of workpieces. 4,062,437, Cl. 198-344.000.
Kneer, Franz Xaver, to Gebruder Weiss K.G. Method of and apparatus for digesting organic waste and/or sewage sludge. 4,062,770, Cl. 210-12.000.
Knight, Geoffrey Thomas, to Rubber Research Institute of Malaysia, The Board of the. Treatment of rubber latex. 4,062,906, Cl. 260-739.000.
Knight, John H., to Superior Oil Company, The. Sulfur dioxide removal using thermally crushed nahcolite. 4,062,926, Cl. 423-244.000.
Knights, Peter Brian. Internal combustion engine. 4,062,327, Cl. 123-25.00R.
Knobel, Max. Flexible instrument pointer. 4,062,316, Cl. 116-136.500.
Knop, Klaus: *See*—
Altenhoner, Klaus; Jansen, Walter; Knop, Klaus; and Reering, Jan G., 4,062,529, Cl. 266-156.000.
Knosp, Helmut, to Deutsche Gold- und Silber-Scheideanstalt Vormals Roessler. Gold alloy for firing on porcelain for dental purposes. 4,062,676, Cl. 75-165.000.

Knuesting, Gregor, to Wilhelm Stoll, Maschinenfabrik GmbH. Haymaking machine. 4,062,174, Cl. 56-370.000.

Knuppel, Helmut; Brotzmann, Karl; and Fassbinder, Hans-Georg, to Eisenwerk-Gesellschaft Maximilianshutte mbH. Method and apparatus for desulphurizing in the gasification of coal. 4,062,657, Cl. 48-77.000.

Kobashi, Toshiyuki; Ozaki, Masahiko; and Ono, Kenichi, to Japan Exlan Company Limited. Process for producing acrylonitrile polymer melt. 4,062,857, Cl. 260-29.6AN.

Kobayashi, Kozo, to Nakamichi Research Inc. Level meter circuit. 4,063,170, Cl. 324-132.000.

Koca, Robert M.: *See—*
Bertolacini, Ralph J.; and Koca, Robert M., 4,062,802, Cl. 252-435.000.

Koebel, Ralph Francis: *See—*
Witenhafer, Donald Edward; Daniels, Charles Anthony; and Koebel, Ralph Francis, 4,062,925, Cl. 423-240.000.

Kohler, Lothar: *See—*
Rohr, Willy; and Kohler, Lothar, 4,062,382, Cl. 139-448.000.

Kohno, Yoshiki: *See—*
Masunaga, Midori; Kohno, Yoshiki; and Hayashi, Kohji, 4,062,791, Cl. 252-63.000.

Koike, Yuji, to Kabushiki Kaisha Daini Seikosha. Switching mechanism for an electronic timepiece. 4,062,179, Cl. 58-23.00R.

Kojima, Shinichi; and Sakamoto, Yoshio, to Hitachi, Ltd. Direct coupling type power amplifier circuit. 4,063,185, Cl. 330-255.000.

Kojima, Teiryo; and Kitazawa, Shin-ichi, to Toray Industries, Inc. Spun yarn and process for manufacturing the same. 4,062,177, Cl. 57-140.0BY.

Kole Enterprises, Inc.: *See—*
Bartholomew, Allan E., 4,062,452, Cl. 211-55.000.

Komatsubara, Michimasa; Waku, Toshihiko; Fukai, Tetsuya; and Satsuka, Akito, to Sony Corporation; and Soshin Electric Company Limited. Printed circuit with inductively coupled printed coil elements and a printed element forming a mutual inductance therewith. 4,063,201, Cl. 333-70.00R.

Komiyama, Kenzi: *See—*
Ishida, Minoru; and Komiyama, Kenzi, 4,062,113, Cl. 30-260.000.

Kondo, Takamitsu; and Tashiro, Mikio, to Teijin Limited. Synthetic organic fibers coated with an amino silane and an epoxy siloxane containing treating agent. 4,062,999, Cl. 428-391.000.

Kondur, Nicholas, Jr.; Wilczewski, Robert H.; and Myers, Charles M., to LRC, Inc. Matrix head calculator printer. 4,062,436, Cl. 197-82.000.

Koninklijke Machinefabriek Stork B.V.: *See—*
Wiemer, Willem; and van den Boomen, Mart, 4,062,661, Cl. 55-190.000.

Konishiroku Photo Industry Co., Ltd.: *See—*
Ichikawa, Yasuhiko; and Hayakawa, Fumiyasu, 4,062,631, Cl. 355-3.00R.
Nagoshi, Mitsuru, 4,063,066, Cl. 219-216.000.

Konno, Mitsutaka. Electrically controlled fuel injection system. 4,062,328, Cl. 123-32.0EL.

Konomi, Toshiaki: *See—*
Toda, Tadahide; and Konomi, Toshiaki, 4,062,334, Cl. 123-122.0AB.

Kooreman, Hermanus Jacobus: *See—*
Vos, Cornelis; Den Admirant, Jacobus; van Os, Jan Lambert; Jongsma, Hendrik Marten; and Kooreman, Hermanus Jacobus, 4,062,948, Cl. 424-180.000.

Kopecek, Jinrich; Ulbrich, Karel; Vacik, Jiri; Strohalm, Jiri; Chytry, Vladimir; Drobnik, Jaroslav; and Kalal, Jaroslav, to Ceskoslovenska akademie ved. Copolymers based on N-substituted acrylamides, N-substituted methacrylamides and N,N-disubstituted acrylamides and the method of their manufacturing. 4,062,831, Cl. 260-47.0UA.

Kopia, Leonard P.: *See—*
Keafer, Lloyd S., Jr.; Burcher, Ernest E.; and Kopia, Leonard P., 4,062,996, Cl. 428-334.000.

Kopp, Adolph, Jr. Method of recovering fresh water from saline water. 4,062,735, Cl. 203-10.000.

Koppers Company, Inc.: *See—*
Miller, A. Leslie, 4,062,415, Cl. 177-208.000.
Peter, Jakob; Thatcher, Perry D.; and Steele, Kenneth L., 4,062,532, Cl. 271-6.000.

Koppl, Franz: *See—*
Griesshammer, Rudolf; Koppl, Franz; Goppinger, Alois; Hamster, Helmut; and Thalmeier, Josef, 4,062,714, Cl. 156-304.000.

Korger, Heinz, to Hannes Marker. Ski stick. 4,062,554, Cl. 280-11.37D.

Kornreich, Philipp G.; and Kowel, Stephen T., to Research Corporation. Motion detection employing direct Fourier transforms of images. 4,063,281, Cl. 358-105.000.

Kornylak Corporation: *See—*
Harmon, Thomas; and Keeling, Tracy, 4,062,525, Cl. 366-138.000.

Korpman, Ralf, to Johnson & Johnson. Reticular web. 4,062,995, Cl. 428-134.000.

Koster, William H.: *See—*
Dolfini, Joseph E.; Slusarchyk, William A.; and Koster, William H., 4,062,842, Cl. 260-239.100.

Kovaleski, Joseph J., to Wyrepak Industries. Snap-on, wire pay-off cap assembly. 4,062,505, Cl. 242-128.000.

Kovatch, George N.; Vaill, Ronald E.; and Kepes, William E., to Westinghouse Electric Corporation. Powered loading system. 4,062,465, Cl. 214-516.000.

Kowel, Stephen T.: *See—*
Kornreich, Philipp G.; and Kowel, Stephen T., 4,063,281, Cl. 358-105.000.

Kozma, Adam; Vander Lugt, Anthony; and Bardos, Andrew M., to Harris Corporation. Optical information storage system. 4,063,226, Cl. 365-125.000.

Krall, Albert D.: *See—*
Anderson, Wallace E.; Krall, Albert D.; Syeles, Albert M.; and Vansant, Oscar J., 4,063,243, Cl. 343-100.0SA.

Krause, Thomas R.: *See—*
Dishaw, James; and Krause, Thomas R., 4,063,219, Cl. 340-146.3MA.

Krewalk, John J., Sr., to Criterion Manufacturing Company, Inc. Manually operated shutter attachment. 4,063,263, Cl. 354-253.000.

Kritz, Jacob A., to Sperry Rand Corporation. Lens transducer for use in marine sonar doppler apparatus. 4,063,214, Cl. 340-8.00L.

Kritzer, Richard W. Respirators. 4,062,358, Cl. 128-208.000.

Krizan, Bradford J., to Safco Products Co. Shelving assembly with removable divider inserts. 4,062,302, Cl. 108-60.000.

Kuboshima, Makoto, to Fuji Photo Film Co., Ltd. View finder optical system. 4,063,261, Cl. 354-225.000.

Kuchar, Norman R.: *See—*
Godfrey, David E.; and Kuchar, Norman R., 4,062,229, Cl. 73-88.00F.

Kuderna, Jerome G.; and Saliman, Paul M., to Shell Oil Company. Depletion indicator for controlled-release pesticide formulations. 4,062,649, Cl. 23-230.00R.

Kugele, Thomas G., to Cincinnati Milacron Chemicals, Inc. Sulfide containing tin stabilizers. 4,062,881, Cl. 260-399.000.

Kuhnen, Gottfried, to BBC Brown Boveri & Company Limited. Electron beam welding technique for joining two workpieces together. 4,063,062, Cl. 219-121.0EM.

Kulite Semiconductor Products Inc.: *See—*
Kurtz, Anthony D.; and Mallon, Joseph R., 4,063,209, Cl. 338-4.000.

Kull, George A., to ACF Industries, Incorporated. Locking device for pneumatic outlet requiring tool to open the end cap. 4,062,596, Cl. 302-52.000.

Kullmann, Dieter; and Intichar, Lutz, to Siemens Aktiengesellschaft. Rotor containing a field winding cooled to a low temperature. 4,063,122, Cl. 310-64.000.

Kunicki, Maryan; and Roussel, Michel, to Entreprise Gagneraud Pere et Fils. Process for improving the fragmentation capability of metallurgical slags and cinders. 4,062,672, Cl. 75-30.000.

Kunst, Branko; and Sourirajan, Srinivasa, to Canadian Patents and Development Ltd. Reverse osmosis membranes. 4,062,782, Cl. 210-500.00M.

Kunst, Helmut; and Scondo, Christian, to Deutsche Gold- und Silber-Scheideanstalt Vormals Roessler. Process for partially insulating surfaces of metal work pieces. 4,062,702, Cl. 148-14.000.

Kunz, Peter, to Mettler Instrumente AG. Weighing apparatus including linearized electromagnetic compensation means. 4,062,417, Cl. 177-212.000.

Kuroda, Mituru. Apparatus for laterally stretching textile fabric and the like. 4,062,094, Cl. 26-75.000.

Kuroyama, Toshinobu: *See—*
Sakurai, Kaoru; Murakami, Harunori; Nakamura, Mitsuhiro; and Kuroyama, Toshinobu, 4,063,247, Cl. 343-704.000.

Kurtz, Anthony D.; and Mallon, Joseph R., to Kulite Semiconductor Products Inc. Integral transducer assemblies employing built-in pressure limiting. 4,063,209, Cl. 338-4.000.

Kurz, Georg: *See—*
Bergander, Armin; and Kurz, Georg, 4,063,249, Cl. 343-756.000.

Kusaba, Hideyuki: *See—*
Hara, Hiroshi; Adachi, Keiichi; and Kusaba, Hideyuki, 4,062,684, Cl. 96-60.00R.

Kutsch, Wilhelm P.: *See—*
Sponaes, John R.; and Kutsch, Wilhelm P., 4,062,644, Cl. 8-2.50A.

Kuwabara, Yoshitaka: *See—*
Yoshida, Hiroshi; Kuwabara, Yoshitaka; and Tsuchida, Hideo, 4,062,196, Cl. 61-72.700.

Kuxdorf, Bernhard; Kaiser, Karl; and Wissel, Kurt, to Hoechst Aktiengesellschaft. Degassing column. 4,062,662, Cl. 55-206.000.

Kyte, Colin Trevor; Lewis, Geoffrey John; Pearce, Edgar; and Hume, Keith, to Fosroc A.G. Treatment of wood. 4,062,991, Cl. 427-297.000.

Kyuma, Tatsuo; and Nakazawa, Mikio, to New Japan Chemical Company, Limited. Process for preparing N,N-dialkyl aromatic amines. 4,062,893, Cl. 260-577.000.

L. Schuler GmbH: *See—*
Schneider, Franz; and Braitinger, Helmut, 4,062,213, Cl. 72-24.000.

Laboratoires Andre Guerbet: *See—*
Tilly, Guy; Hardouin, Michel Jean-Charles; and Lautrou, Jean, 4,062,934, Cl. 424-5.000.

Lacagnina, John M.; Weber, Ernest G.; Rucinski, David W.; and Robinson, Bruce R., to Quality Measurement Systems, Inc. Digital electronic micrometer. 4,062,120, Cl. 33-166.000.

Lachevre, Christian: *See—*
Jolivet, Yannick; and Lachevre, Christian, 4,062,787, Cl. 252-51.50A.

La Custa, Mike, to Chrysler Corporation. Method and tool for assembling an impact resistant gasoline tank. 4,062,101, Cl. 29-451.000.

Laerdal, Asmund Sigurd. Respirator mask. 4,062,357, Cl. 128-146.000.

Lagain, Georges. Apparatus for stacking bags. 4,062,271, Cl. 93-33.00H.

Lahl, Gerhard, to ELMEG Elektro-Mechanik GmbH. Gear train for interconnecting side-by-side positioned drums, rolls, wheels, etc. 4,062,250, Cl. 74-415.000.

Laing, Clyde A.: *See—*
Tabor, Martin A.; Tabor, Abby F.; and Laing, Clyde A., 4,062,429, Cl. 190-18.00A.

Lake, Hilton J. Explosively operated wire cutter. 4,062,112, Cl. 30-228.000.

Lalu, Jean-Pierre: *See—*
Foulletier, Louis; and Lalu, Jean-Pierre, 4,062,849, Cl. 260-279.00R.

Lamphere, David A.; and Weitz, Paul G., Jr., to Simmonds Precision Products, Inc. Nitrogen content monitor for liquified natural gas. 4,062,223, Cl. 73-27.00R.

Lampl, Helma: *See—*
Herbold, Oskar; and Dittloff, Dieter, 4,062,304, Cl. 110-8.00R.
Herbold, Oskar, 4,062,474, Cl. 222-36.000.
Herbold, Oskar, 4,062,474, Cl. 222-36.000.

Lamport, Ivan R.: *See—*
Bartlett, Harold H., Jr.; Herr, Charles H., Jr.; Kinney, Lionel L.; Lamport, Ivan R.; and Welch, Clarence A., 4,062,234, Cl. 73-135.000.

Lampson, Butler W.: *See—*
Metcalfe, Robert M.; Boggs, David R.; Thacker, Charles P.; and Lampson, Butler W., 4,063,220, Cl. 340-147.0LP.

Lamy, Jacques Edouard, to C. G. DORIS (Compagnie Generale pour les Developments Operationels des Richesses Sous-marines). Method and apparatus for the laying of a submerged pipeline such as a submarine pipeline. 4,062,198, Cl. 61-112.000.

Landustrie Sneek Machinefabriek Elektrotechniek B.V.: *See—*
Pepping, Roelf, 4,062,911, Cl. 261-91.000.

Lang, Andre: *See—*
Marie, Gilbert; Lang, Andre; and Chapelet, Gilbert, 4,063,010, Cl. 526-169.000.

Lang, George R.: *See—*
Stivender, Paul M.; Lang, George R.; and Mentink, Raymond C., 4,062,518, Cl. 250-519.000.

Lang, William H.: *See—*
Chang, Clarence D.; Lang, William H.; and Silvestri, Anthony J., 4,062,905, Cl. 260-682.000.

Lansford, Robert W.: *See—*
Gardner, Tommy R.; and Lansford, Robert W., 4,062,796, Cl. 252-180.000.

Lanz, Otto; and Vitins, Michael, to BBC Brown Boveri & Company Limited. Method and apparatus for locating a fault on a line by means of travelling wave signals. 4,063,160, Cl. 324-52.000.

Lanz, Otto; and Vitins, Michael, to BBC Brown Boveri & Company Limited. Process and apparatus for locating faults on a line through the use of travelling wave signals. 4,063,162, Cl. 324-52.000.

Lanz, Otto; Mastner, Jiri; and Vitins, Michael, to BBC Brown Boveri & Company Limited. Method and apparatus for detection of short circuits by phase monitoring traveling wave signals. 4,063,164, Cl. 324-52.000.

Lanz, Otto, to BBC Brown Boveri & Company Limited. Apparatus for localization of a line fault by using traveling wave signals especially for locating faults both near and far from a measuring location. 4,063,165, Cl. 324-52.000.

Lape, Larry J., to Hycel, Inc. Ignition means in a chemical analyzer flame photometer. 4,062,651, Cl. 23-253.0PC.

Laridon, Urbain Leopold; Van Brandt, Rene Alois; and Poot, Albert Lucien, to AGFA-GEVAERT N.V. Fixer compositions used in planographic printing containing onium compounds. 4,062,682, Cl. 96-29.00L.

Larson, Elden Roger; and Dreher, Robert Donald, to Control Data Corporation. Plural oscillator phase continuous frequency encoder. 4,063,196, Cl. 332-16.00T.

Laugesen, Ronald C.; and Priel, Ury, to National Semiconductor Corporation. Circuit for increasing the output current in MOS transistors. 4,063,117, Cl. 307-270.000.

Laurer, Peter Rudolf; Schroeder, Wolfgang; Hoffmann, Herwig; and Lingk, Heinz, to BASF Aktiengesellschaft. Butynediol manufacture. 4,062,899, Cl. 260-635.00Y.

Lautrou, Jean: *See—*
Tilly, Guy; Hardouin, Michel Jean-Charles; and Lautrou, Jean, 4,062,934, Cl. 424-5.000.

Law, Andrew B., to Rohm and Haas Company. Parasiticidal animal dip compositions protected against microbial buildup. 4,062,946, Cl. 424-134.000.

Lawrence, John E.; and Wu, Icheng, to Silicon Material, Inc. Process for manufacturing a solar cell from a reject semiconductor wafer. 4,062,102, Cl. 29-572.000.

Lawson, Dennis Lee: *See—*
Stricharczuk, Paul Thomas; and Lawson, Dennis Lee, 4,062,915, Cl. 264-50.000.

Lawson, Lawrence: *See—*
Taube, Frank; and Lawson, Lawrence, 4,062,220, Cl. 73-3.000.

Lax, Benjamin: *See—*
Aggarwal, Roshan L.; Lee, Neville K. S.; and Lax, Benjamin, 4,063,105, Cl. 307-88.300.

Le Cain, Yves Dominique; Nagati, Ali; and Pellet, Bruno A. F., to International Standard Electric Corporation. Overload protection tube. 4,063,127, Cl. 313-325.000.

Lee, Neville K. S.: *See—*
Aggarwal, Roshan L.; Lee, Neville K. S.; and Lax, Benjamin, 4,063,105, Cl. 307-88.300.

Lee, William R., to Leeco Manufacturing, Inc. Rotary garden cutter. 4,062,115, Cl. 30-276.000.

Lee, Yuan Ho. Feeding device for high speed nut formers. 4,062,080, Cl. 10-76.00T.

Lee, Yuan Ho. Feedstock cutting and feeding device for forming machines. 4,062,258, Cl. 83-161.000.

Leeco Manufacturing, Inc.: *See—*
Lee, William R., 4,062,115, Cl. 30-276.000.

Lefebvre, Claude; and Therond, Jean-Paul, to Commissariat a l'Energie Atomique. Positive safety control device. 4,063,181, Cl. 328-147.000.

Leggett, Margaret Kenley: *See—*
Hutchinson, Francis Gowland; Henbest, Richard George Cleveland; and Leggett, Margaret Kenley, 4,062,826, Cl. 260-40.0TN.

Lehmann, Rudolf; Pfeiffer, Hans F.; Schindler, Joachim; and Schreiber, Wolfgang, to Henkel Kommanditgesellschaft auf Aktien. Process of producing acid stable protease. 4,062,732, Cl. 195-66.00R.

Lei, Kenneth P. V.: *See—*
Henrie, Thomas A.; Lindstrom, Roald E.; and Lei, Kenneth P. V., 4,062,744, Cl. 204-106.000.

Lejdegard, Sixten H., to Bulten-Kanthal AB. Screw applicator. 4,062,389, Cl. 144-32.00R.

Lemonaid Limited: *See—*
Odell, John Anthony, 4,062,262, Cl. 83-717.000.

Lenne, William: *See—*
Wajs, Georges; and Lenne, William, 4,062,627, Cl. 351-160.000.

Lentz, James A.: *See—*
Safford, George J.; and Lentz, James A., 4,062,812, Cl. 252-500.000.

Leonard, Ralph R.; and Taylor, Ted J., to Industrial Analytics Inc. Torque limiting device. 4,062,203, Cl. 64-29.000.

Leonard, Ronald J., to Baxter Travenol Laboratories, Inc. High surface to volume structure and method of generating same. 4,062,773, Cl. 210-65.000.

Leowald, Karl-Friedrich, to Siemens Aktiengesellschaft. Circuit arrangement for firing controlled, parallel-connected electric valves. 4,063,145, Cl. 363-71.000.

Le Page, Jean-Francois: *See—*
Franck, Jean-Pierre; and Le Page, Jean-Francois, 4,062,805, Cl. 252-430.000.

Lepetri, Joseph. Picket fence with removable intermediate flats. 4,062,522, Cl. 256-1.000.

Lerman, Victor S., to Amalgamated Enterprises. Bubble generator. 4,062,143, Cl. 46-6.000.

Lesage, Jean, to Institut Francais du Petrole. Process for manufacturing hydraulic concretes, mortars and cement slurries of improved properties. 4,062,822, Cl. 260-29.40R.

Leak, Israel Arnold, to Motorola, Inc. Solar fluid heater. 4,062,352, Cl. 126-271.000.

Lev, Benjamin: *See—*
Bloom, Bernard; and Lev, Benjamin, 4,062,063, Cl. 2-187.000.

Lever Brothers Company: *See—*
Sen Gupta, Achintya Kumar, 4,062,882, Cl. 260-428.500.

Levine, Seymour, to Sperry Rand Corporation. Linear D.C. drive circuit. 4,063,141, Cl. 318-648.000.

Lew, Sandy Y.; and Conley, Edward F., to Brunswick Corporation. Process of oxidizing hydrocarbons using catalysts with high heat conductivity. 4,062,872, Cl. 260-346.400.

Lewis, Geoffrey John: *See—*
Kyte, Colin Trevor; Lewis, Geoffrey John; Pearce, Edgar; and Hume, Keith, 4,062,991, Cl. 427-297.000.

Lewis, Roger N.: *See—*
Friedman, Ronald L.; and Lewis, Roger N., 4,063,013, Cl. 526-227.000.

Lewis, William C.; Darrow, Robert P.; and Yoerger, William E., to Eastman Kodak Company. Electrophotographic element having a hydrophobic, cured, highly cross-linked polymeric overcoat layer. 4,062,681, Cl. 96-1.50N.

Licentia Patent-Verwaltungs-G.m.b.H.: *See—*
Bergander, Armin; and Kurz, Georg, 4,063,249, Cl. 343-756.000.

Lichtenberg, Jose: *See—*
Rojahn, Fred H.; and Lichtenberg, Jose, 4,062,919, Cl. 264-145.000.

Lieberman, Edgar M.: *See—*
Polsky, Norman; Burnett, Frank; Gerner, James L.; Heying, Norman J.; and Lieberman, Edgar M., 4,062,590, Cl. 297-455.000.

Liechti, Hans Wilhelm; and Reinker, Dieter, to Ciba-Geigy Corporation. Disperse phenylazophenylazobarbituric acid dyestuffs. 4,062,836, Cl. 260-154.000.

Lier, Otto Bjorn: *See—*
Fremstedal, Sverre Oddmund; and Lier, Otto Bjorn, 4,063,296, Cl. 360-118.000.

Lin, Chinlon: *See—*
Ashkin, Arthur; Jain, Ravinder Kumar; Lin, Chinlon; and Stolen, Rogers Hall, 4,063,106, Cl. 307-88.300.

Lin, Jung-Yaw: *See—*
Tung, Ta-Cheng; and Lin, Jung-Yaw, 4,062,949, Cl. 424-180.000.

Lindberg, George D., to Board of Supervisors Louisiana State University A & M. Antibiotic producted from the microorganism (*Pseudomonas Lindbergii*), its preparation and method of use. 4,062,943, Cl. 424-115.000.

Lindell, Lawrence Edwin. Vertically adjustable wall forms. 4,062,513, Cl. 249-20.000.

Lindemann Maschinenfabrik GmbH: *See—*
Tripp, Karl Heinz, 4,062,281, Cl. 100-35.000.

Lindquist, Robert H., to Chevron Research Company. Process for producing lithium-containing ferrimagnetic materials. 4,062,920, Cl. 264-153.000.

Lindquist, Robert H., to Chevron Research Company. Removal of aflatoxin from peanuts. 4,062,984, Cl. 426-430.000.

Lindroth, David P.: *See—*
Roepke, Wallace W.; Lindroth, David P.; and Wilson, Richard J., 4,062,595, Cl. 299-18.000.

Lindstedt, Dennis H.: *See—*
Rudny, Donald F.; and Lindstedt, Dennis H., 4,062,401, Cl. 165-125.000.
Lindstrom, Roald E.: *See—*
Henrie, Thomas A.; Lindstrom, Roald E.; and Lei, Kenneth P. V., 4,062,744, Cl. 204-106.000.
Lingk, Heinz: *See—*
Laurer, Peter Rudolf; Schroeder, Wolfgang; Hoffmann, Herwig; and Lingk, Heinz, 4,062,899, Cl. 260-635.00Y.
Lingle, Harrison Church, to Hartco Company. Self-sustaining spring fastener clips for furniture rails and assemblies thereof. 4,062,087, Cl. 24-84.00R.
Link, David Allen: *See—*
Appelman, Dudley Ralph; Link, David Allen; and Stout, Gerald Louret, 4,063,035, Cl. 179-1.0SP.
Linke, Walter R.: *See—*
Fleischman, Andor A.; and Linke, Walter R., 4,062,625, Cl. 350-202.000.
Linkow, Leonard I.; Chambliss, Joni; and Cloyd, Wallace W. Symphyseal-rami endosteal implant. 4,062,119, Cl. 32-10.00A.
Lirones, Nick G., to Howmet Turbine Components Corporation. Apparatus for producing directionally solidified castings. 4,062,399, Cl. 164-338.00M.
Liskey Architectural Mfg. Inc.: *See—*
Ray, George F., 4,062,511, Cl. 248-300.000.
Lister, Edward Alan; and Clarke, Graham Wilson, to Brdr. Schur International A.S. Packaging machines. 4,062,169, Cl. 53-124.00D.
Litch, Ernest W., III, to General Electric Company. Methods of making torsional vibration isolating motor mounting systems and arrangements. 4,063,060, Cl. 219-93.000.
Litherland, Kenneth Leslie; Maguire, Phillip; and Cheetham, Colin Jones, to Pilkington Brothers Limited. Coating compositions for glass fibres. 4,062,690, Cl. 106-98.000.
Litton Systems, Inc.: *See—*
Williams, Howard E., 4,063,207, Cl. 336-171.000.
Wyse, Stanley Frederick, 4,062,600, Cl. 308-2.00A.
Liu, Robert Chung-Huang: *See—*
Hughes, John Lawrence; Seyler, Jay Kenneth; and Liu, Robert Chung-Huang, 4,062,815, Cl. 260-8.000.
Lloyd, William W.: *See—*
Bean, Kenneth E.; and Lloyd, William W., 4,063,271, Cl. 357-49.000.
Lo, Allen Kwok Wah; and Nims, Jerry Curtis, to Dimensional Development Corporation. Apparatus for taking stereoscopic pictures. 4,063,265, Cl. 354-294.000.
Locatelli, John D. Card filed box with outwardly opening front and rear panels. 4,062,607, Cl. 312-258.000.
Locker Industries Limited: *See—*
Elliot, Jack, 4,062,768, Cl. 209-341.000.
Lodige, Fritz: *See—*
Lodige, Wilhelm; Lodige, Fritz; and Lucke, Josef, 4,062,646, Cl. 21-56.000.
Lodige, Wilhelm; Lodige, Fritz; and Lucke, Josef. Process for sterilizing loose material. 4,062,646, Cl. 21-56.000.
Loeffler, Ronald. Helical spring game. 4,062,543, Cl. 273-110.000.
Lohmar, Elmar: *See—*
Ohorodnik, Alexander; Lohmar, Elmar; Gehrmann, Klaus; and Stutzke, Paul, 4,062,888, Cl. 260-545.00P.
Lolivier, Jacques; and Ryckaert, Andre, to Solvay & Cie. Process for the stabilization of methylene chloride. 4,062,901, Cl. 260-652.50R.
Lollar, Elizabeth Dianne: *See—*
Confalone, Pasquale Nicholas; Lollar, Elizabeth Dianne; Pizzolato, Giacomo; and Uskokovic, Milan Radoje, 4,062,868, Cl. 260-332.20A.
Long, Delmar D., to M. Lowenstein & Sons, Inc. Method and apparatus for coating moving webs and products produced thereby. 4,062,989, Cl. 427-176.000.
Long, Edward R., Jr.: *See—*
Rogowski, Robert S.; and Long, Edward R., Jr., 4,062,650, Cl. 23-232.00E.
Longenecker, Levi S. Suspended roof for electric arc furnace. 4,063,028, Cl. 13-35.000.
Lonski, Ryszard: *See—*
Zawadzki, Bohdan; Bulinska, Anna; Szulc, Zenon; Lonski, Ryszard; and Brzoskowski, Zbigniew, 4,062,930, Cl. 423-483.000.
L'Oreal: *See—*
Morane, Bruno, 4,062,477, Cl. 222-145.000.
Lorenzi, Donald E.; Sabielny, Richard C.; and Schroeder, Kenneth W., to Magnaflux Corporation. Magnetic testing device for internal surfaces of pipe using a magnetizing means and expandable magnetizable material within the pipe. 4,063,157, Cl. 324-213.000.
Los, Marinus, to American Cyanamid Company. Imidazoisoindolediones, and the use thereof as herbicidal agents. 4,062,671, Cl. 71-92.000.
Losi, Salvatore: *See—*
Meyer, Andre R.; Losi, Salvatore; Marka, Erwin; Rudio, Jacques; and Zuntini, Franco, 4,062,736, Cl. 204-43.00G.
Louisiana State University Foundation: *See—*
Srinivasan, Vadake R.; Fleenor, Marvin B.; Summers, Richard J.; and Bumm, Margaret W., 4,062,727, Cl. 195-28.00R.
Lowenfeld, Rudolf: *See—*
Deucker, Walter; and Lowenfeld, Rudolf, 4,062,642, Cl. 8-1.0UA.
LRC, Inc.: *See—*
Kondur, Nicholas, Jr.; Wilczewski, Robert H.; and Myers, Charles M., 4,062,436, Cl. 197-82.000.
Lubanska, Hope: *See—*
Hawkes, David A.; Uemlianin, Andray; and Lubanska, Hope, 4,062,674, Cl. 75-61.000.
Luck, Ewald, to GeGa Gesellschaft fur Gasetechnik Lotz KG. Gas supply device for flame scarfing. 4,062,495, Cl. 239-559.000.
Lucke, Josef: *See—*
Lodige, Wilhelm; Lodige, Fritz; and Lucke, Josef, 4,062,646, Cl. 21-56.000.
Luckenbach, Edward C., to Exxon Research and Engineering Company. Method for varying the catalyst circulation rate in a fluid catalytic cracking process. 4,062,761, Cl. 208-164.000.
Ludwig Taprogge Reinigungsanlagen fur Rohren-Warmeaustauscher: *See—*
Sonnenschein, Hans; and Pohl, Felix, 4,062,912, Cl. 261-116.000.
Ludwig, Volker, to Siemens Aktiengesellschaft. Non-return to zero mark to non-return to zero level code converter. 4,063,235, Cl. 340-347.0DD.
Luebbers, Scott S.: *See—*
Rando, Joseph F.; Kahn, Michael E.; Heumann, Thomas E.; and Luebbers, Scott S., 4,062,634, Cl. 356-248.000.
Luhrs, Otto R.: *See—*
Feierabend, Louis B.; and Luhrs, Otto R., 4,062,659, Cl. 51-281.00R.
Luick, Woodrow Wilson. Vegetation cutting apparatus. 4,062,114, Cl. 30-276.000.
Lukawsky, Michael. Mechanical movement. 4,062,246, Cl. 74-88.000.
Lundquist, Ray Arnold. Adjustable routing template. 4,062,123, Cl. 33-174.00G.
Lyden, Frank J., to Oil-Rite Corporation. Oiler assembly. 4,062,424, Cl. 184-65.000.
Lydia Design Ltd.: *See—*
Basaldua, Lydia Silvestry, 4,062,062, Cl. 2-105.000.
Lye, Ronald William, to General Electric Company. Half-wave detector for alternating current static switches. 4,063,301, Cl. 361-88.000.
Lyman, Julian Turner: *See—*
Alcorn, George Edward; Feeley, James Downer; and Lyman, Julian Turner, 4,062,720, Cl. 156-643.000.
Lynch, Francis deSales; Reid, Walter L., Jr.; and Jepson, John W., to Acushnet Company. Method of matching golfer with golf ball, golf club, or style of play. 4,063,259, Cl. 354-120.000.
M & J Valve Company: *See—*
Grove, Marvin H., 4,062,516, Cl. 251-174.000.
M. Lowenstein & Sons, Inc.: *See—*
Long, Delmar D., 4,062,989, Cl. 427-176.000.
Maag Gear-Wheel & Machine Company Limited: *See—*
Maag, Oskar, 4,062,125, Cl. 33-179.50D.
Maag, Oskar, to Maag Gear-Wheel & Machine Company Limited. Apparatus for testing the tooth flanks of involute gearing. 4,062,125, Cl. 33-179.50D.
Macaulay, Norman, to Moore Business Forms, Inc. Dual system carbonless paper. 4,062,567, Cl. 282-27.500.
Machida, Tetsuo, to Sony Corporation. Tape cassette with features for preventing the tape from moving up or downwardly relative to the cassette. 4,062,506, Cl. 242-199.000.
Machine Technology, Inc.: *See—*
Hillman, Gary; and Devico, Michael J., 4,062,463, Cl. 214-301.000.
MacLeay, Ronald Edward; and Sheppard, Chester Stephen, to Pennwalt Corporation. Polymerization of ethylenically unsaturated monomers employing catalyst of aliphatic α-(hydroperoxy)azo compounds and salts thereof. 4,063,012, Cl. 526-219.000.
Maddux, John F.: *See—*
Varrasso, Eugene C.; and Maddux, John F., 4,063,027, Cl. 13-6.000.
Maejima, Husazo, to Philmac Denki Kabushiki Kaisha. Electrical grinding machine for coffee beans. 4,062,499, Cl. 241-259.000.
Mager, David; Heronemus, William E.; and Woodhead, Peter M. J., to Pacific Power and Protein, Inc. Method of preventing the accumulation of micro-organisms in thermal energy conversion systems. 4,062,189, Cl. 60-641.000.
Magerlein, Barney J., to Upjohn Company, The. 4,5-Cis-didehydro-PGE_1 analogs. 4,063,026, Cl. 560-121.000.
Magerramova, Roida Jusuf Kyzy: *See—*
Mekhtiev, Soltan Dzhafarovich; Rizaev, Ramiz Gasan Kuli Ogly; Novruzova, Adilya Shir Mamed Kyzy; Magerramova, Roida Jusuf Kyzy; Suleimanov, Geibat Nagmetovich; Rafiev, Murshud Sary Ogly; Guseinov, Fikret Dzhabrail Ogly; and Sheinin, Viktor Efimovich, 4,062,885, Cl. 260-465.00C.
Magnaflux Corporation: *See—*
Lorenzi, Donald E.; Sabielny, Richard C.; and Schroeder, Kenneth W., 4,063,157, Cl. 324-213.000.
Magnavox Company, The: *See—*
Purinton, Edwin C.; Holzinger, Carl S.; and Auger, Robert, 4,063,230, Cl. 340-280.000.
Magne, Frank C.: *See—*
Mod, Robert R.; Harris, James A.; Arthur, Jett C., Jr.; Magne, Frank C.; Sumrell, Gene; and Novak, Arthur F., 4,062,841, Cl. 260-239.0BF.
Magnuson, Roland A., to United States of America, Army. Wedge block lock for vehicle track end connectors. 4,062,598, Cl. 305-58.0PC.
Maguire, Phillip: *See—*
Litherland, Kenneth Leslie; Maguire, Phillip; and Cheetham, Colin Jones, 4,062,690, Cl. 106-98.000.
Maida, Osamu, to Nippon Kogaku K.K. Drive circuit for pulse synchronized motor. 4,063,138, Cl. 318-318.000.
Mains, Harold E.; Williams, Frederick R.; and O'Brien, William L., to

Emery Industries, Inc. Polyamide blends having improved processing characteristics. 4,062,819, Cl. 260-18.00N.
Maisonneuve, Leo V. Container dispensing device. 4,062,200, Cl. 62-320.000.
Make, Siegfried: *See—*
Rambacher, Paul; and Make, Siegfried, 4,062,847, Cl. 260-260.000.
Makishima, Tokuo: *See—*
Ueno, Hiroshi; Inaba, Naomi; Makishima, Tokuo; and Wada, Shozo, 4,062,804, Cl. 252-429.00B.
Malcolm, Bruce G., to Texscan Corporation. Spring contact for high frequency electrical signals. 4,062,609, Cl. 339-8.0RL.
Malkki, Yrjo; Rouhiainen, Leo; Mattsson, Raimo; and Markkanen, Pertti, to Rouhiainen, Leo. Procedure for producing enzymes. 4,062,730, Cl. 195-62.000.
Mallams, Alan K., to Schering Corporation. Garamine and derivatives thereof. 4,063,015, Cl. 536-17.000.
Mallams, Alan K.: *See—*
Wright, John J.; Daniels, Peter J. L.; Mallams, Alan K.; and Nagabhushan, Tattanahalli L., 4,062,947, Cl. 424-180.000.
Mallinckrodt, Inc.: *See—*
Wolfangel, Robert G., 4,062,933, Cl. 424-1.000.
Mallon, Dietmar, to Siemens Aktiengesellschaft. Circuit arrangement for decoding a frequency modulated stereo radio signal. 4,063,042, Cl. 179-15.0BT.
Mallon, Joseph R.: *See—*
Kurtz, Anthony D.; and Mallon, Joseph R., 4,063,209, Cl. 338-4.000.
Malm, Bjorn, to AB Slipmaterial-Naxos. Silenced grinding wheel. 4,062,153, Cl. 51-207.000.
Malta, Jacob H., to Schulmerich Carillons, Inc. Handbell. 4,062,317, Cl. 116-171.000.
Mamantov, Gleb; and Marassi, Roberto, to United States of America, Energy Research and Development Administration. Cathode for molten salt batteries. 4,063,005, Cl. 429-103.000.
Mandel Sherman: *See—*
Grossman, Harold; and Mandel Sherman, 4,062,146, Cl. 47-17.000.
Manera, Louis. Tether ball game. 4,062,542, Cl. 273-95.00A.
Manfreda, Walter. Ski binding. 4,062,563, Cl. 280-625.000.
Manini, Silvio; and Pacciarini, Antonio, to Industrie Pirelli S.p.A. Apparatus for storing objects on a vehicle. 4,062,458, Cl. 214-16.40R.
Mann, Don Cowan; and Spencer, George T., to Texas Instruments Incorporated. Flexible magnetic disc recording technique. 4,063,295, Cl. 360-99.000.
Manner, Erich; Adler, Klaus; Pichler, Engelbert; Bauer, Johann; and Sommer, Hans, to Wacker-Chemie GmbH. Adhesive composition and method for bonding polyolefin surfaces with metal surfaces. 4,062,715, Cl. 156-334.000.
Manning, William P., to Combustion Engineering, Inc. Firetube economizer. 4,062,324, Cl. 122-145.000.
Marassi, Roberto: *See—*
Mamantov, Gleb; and Marassi, Roberto, 4,063,005, Cl. 429-103.000.
Marathon Oil Company: *See—*
Farrar, Grover L.; and Storms, Phillip W., 4,062,972, Cl. 424-308.000.
Marcraft Recreation Inc.: *See—*
Marks, Nathan, 4,062,541, Cl. 273-73.00C.
Marie, Gilbert; Lang, Andre; and Chapelet, Gilbert, to Societe Nationale Elf Aquitaine (SNEA). Copolymers of olefins or of olefins and non-conjugated dienes with unsaturated derivatives of cyclic imides. 4,063,010, Cl. 526-169.000.
Maring, Donald G.: *See—*
Heffernan, Stuart D.; and Maring, Donald G., 4,063,037, Cl. 179-7.10R.
Marka, Erwin: *See—*
Meyer, Andre R.; Losi, Salvatore; Marka, Erwin; Rudio, Jacques; and Zuntini, Franco, 4,062,736, Cl. 204-43.00G.
Markkanen, Pertti: *See—*
Malkki, Yrjo; Rouhiainen, Leo; Mattsson, Raimo; and Markkanen, Pertti, 4,062,730, Cl. 195-62.000.
Marks, Nathan, to Marcraft Recreation Inc. Paddle construction. 4,062,541, Cl. 273-73.00C.
Marks, Ronald A.; and Goldman, Neal. Plug device and method and apparatus therefor. 4,062,165, Cl. 52-514.000.
Markwitz, Wernhard: *See—*
Gupta, Jutta Das; Markwitz, Wernhard; and Paetsch, Werner, 4,063,174, Cl. 325-304.000.
Marotti, David Lee. Trapping and killing apparatus for mice and other animals. 4,062,142, Cl. 43-61.000.
Marsh, Harold G.; and Pierret, James A., to Fansteel Inc. Embrittlement-resistant tantalum wire. 4,062,679, Cl. 75-245.000.
Marshall, John Stephen; and Dodd, John Frederick, to Sperry Rand Limited. Hydraulic valves and hydraulic systems. 4,062,374, Cl. 137-115.000.
Marshall, Winston S., to Eli Lilly and Company. 2-(3-Phenoxyphenyl) propanol. 4,062,895, Cl. 260-613.00R.
Martin, Heinz: *See—*
Ziegler, Karl, deceased; Breil, Heinz; Holzkamp, Erhard; and Martin, Heinz, 4,063,009, Cl. 526-159.000.
Ziegler, Karl, deceased; Breil, Heinz; Holzkamp, Erhard; and Martin, Heinz, 4,063,009, Cl. 526-159.000.
Martin, James C.: *See—*
Irick, Gether, Jr.; Kelly, Charles A.; and Martin, James C., 4,062,800, Cl. 252-402.000.
Martin, Jerry Roy: *See—*
Hallas, Robert; Martin, Jerry Roy; and Tadanier, John Soloman, 4,063,014, Cl. 536-9.000.
Martin, Van Clifton: *See—*
Fox, Sidney Jared; and Martin, Van Clifton, 4,063,254, Cl. 346-75.000.
Martina, Henry: *See—*
Wallace, Donald L.; and Martina, Wallace P., 4,062,443, Cl. 198-619.000.
Martina, Wallace P.: *See—*
Wallace, Donald L.; and Martina, Wallace P., 4,062,443, Cl. 198-619.000.
Martorano, Richard: *See—*
Haag, Thomas M.; Brendley, William H., Jr.; and Martorano, Richard, 4,062,821, Cl. 260-29.4UA.
Marvin Glass & Associates: *See—*
Brand, Derek A.; Terzian, Rouben T.; and Montague, Douglas P., 4,062,476, Cl. 222-131.000.
Masaki, Kazumi. Electrode for use in low frequency electronic therapy device. 4,062,364, Cl. 128-405.000.
Maschinenfabrik Augsburg-Nurnberg Aktiengesellschaft: *See—*
Hamann, Lutz, 4,062,295, Cl. 104-279.000.
Mase, Toshiyasu: *See—*
Murakami, Masuo; Takahashi, Kozo; Murase, Kiyoshi; Mase, Toshiyasu; Ida, Hisashi; and Takenaka, Toichi, 4,063,025, Cl. 560-29.000.
Mashimo, Yukio; Uchiyama, Takashi; and Sorimachi, Kanehiro, to Canon Kabushiki Kaisha. Exposure control system. 4,063,257, Cl. 354-31.000.
Mason, Lewis T., to Astro Containers, Inc. Method for deforming and coating a metallic surface. 4,062,312, Cl. 113-120.00A.
Massachusetts Institutes of Technology: *See—*
Aggarwal, Roshan L.; Lee, Neville K. S.; and Lax, Benjamin, 4,063,105, Cl. 307-88.300.
Massey-Ferguson Inc.: *See—*
Mueller, Otto, Jr.; and Wood, Dale A., 4,062,560, Cl. 280-478.00R.
Rose, Jack Howard, 4,062,171, Cl. 56-295.000.
Masson, Pierre Lucien; and Heremans, Joseph Felix, to Technicon Instruments Corporation. Immunoassay involving the binding of RF to the antigen-antibody complex. 4,062,935, Cl. 424-12.000.
Mast, Aquila D.: *See—*
Rice, Robert L.; and Mast, Aquila D., 4,062,172, Cl. 56-343.000.
Mastner, Jiri: *See—*
Lanz, Otto; Mastner, Jiri; and Vitins, Michael, 4,063,164, Cl. 324-52.000.
Masuda, Masami; and Takasu, Syuhei, to Hitachi, Ltd. Centerless grinding method and device using same. 4,062,150, Cl. 51-5.00D.
Masumura, Masanori: *See—*
Matsuda, Minoru; Otani, Junji; Kaji, Kenzo; and Masumura, Masanori, 4,062,333, Cl. 123-119.00C.
Masunaga, Midori; Kohno, Yoshiki; and Hayashi, Kohji, to Nippon Oil Co., Ltd. Electrical insulating oil. 4,062,791, Cl. 252-63.000.
Masuzima, Sho; Yoshida, Shuhei; Yaguchi, Toshiyuki; and Fuchiguchi, Tetsuya, to Tokyo Denki Kagaku Kogyo Kabushiki Kaisha. Apparatus for storing information material in cassettes. 4,062,719, Cl. 156-502.000.
Mate, Zoltan, to International Paper Company. Composition for imparting flame resistance and water repellency to textiles. 4,062,818, Cl. 260-17.00R.
Matikainen, Martti, to Valmet Oy. Rotary assembly and drive therefor. 4,062,252, Cl. 74-801.000.
Matsuda, Minoru; Otani, Junji; Kaji, Kenzo; and Masumura, Masanori, to Honda Giken Kogyo Kabushiki Kaisha. Supercharged internal combustion engine. 4,062,333, Cl. 123-119.00C.
Matsui, Sei, to Nippon Kogaku K.K. Telephoto lens system. 4,062,630, Cl. 350-223.000.
Matsukawa, Hiroharu; and Saeki, Keiso, to Fuji Photo Film Co., Ltd. Method of forming microcapsule films having low porosity. 4,062,799, Cl. 252-316.000.
Matsumoto, Kenji: *See—*
Takeda, Keiji; Matsumoto, Kenji; Tamura, Hiroshi; and Nagata, Masayoshi, 4,062,685, Cl. 96-88.000.
Matsuo, Takashi: *See—*
Fujimoto, Keimei; Ohno, Nobuo; Okuno, Yoshitoshi; Mizutani, Toshio; Ohno, Isao; Hirano, Masachika; Itaya, Nobushige; and Matsuo, Takashi, 4,062,968, Cl. 424-275.000.
Matsushita Electric Industrial Co., Ltd.: *See—*
Hattori, Hajime; Okada, Tadashi; and Kezuka, Eiji, 4,063,280, Cl. 358-22.000.
Kagata, Akira, 4,062,548, Cl. 274-23.00B.
Nagaoka, Tadashi, 4,063,285, Cl. 358-128.000.
Nishida, Masamitsu; and Ouchi, Hiromu, 4,062,790, Cl. 252-62.900.
Matsushita, Takeshi; Hayashi, Hisao; Aoki, Teruaki; and Mochizuki, Hidenobu, to Sony Corporation. Semiconductor device with two passivating layers. 4,063,275, Cl. 357-54.000.
Matsushita, Takeshi: *See—*
Mochizuki, Hidenobu; Aoki, Teruaki; Matsushita, Takeshi; Hayashi, Hisao; and Okayama, Masanori, 4,062,707, Cl. 148-187.000.
Matsuyama Petrochemicals, Inc.: *See—*
Shigeyasu, Motoo; and Kitamura, Takehiko, 4,062,654, Cl. 23-288.00A.
Mattern, John, to Westinghouse Electric Corporation. Hybrid multiplexed filter. 4,063,200, Cl. 333-70.00A.
Matthey, Hubert: *See—*
Huguenin, Raymond; Matthey, Hubert; and Voumard, Martial, 4,062,154, Cl. 51-319.000.
Mattsson, Raimo: *See—*
Malkki, Yrjo; Rouhiainen, Leo; Mattsson, Raimo; and Markkanen, Pertti, 4,062,730, Cl. 195-62.000.

Matula, Donald P.: *See*—
Peak, William H., 4,062,228, Cl. 73-74.000.
Mauric, Claudine; and Wolf, Rainer, to Sandoz Ltd. Phosphoric acid derivatives as flameproofing agents. 4,062,687, Cl. 106-15.0FP.
Mauvernay, Roland Yves; Busch, Norbert; Moleyre, Jacques; Simond, Jacques; and Monteil, Andre, to Centre Europeen de Recherches Mauvernay. Substituted 2-(2-hydroxyethyl)tetrahydro-1,4 oxazines and quaternary salts thereof useful for treating spasmodic syndromes. 4,062,956, Cl. 424-248.570.
Mawhinney, Daniel David, to RCA Corporation. Injection-locked voltage controlled oscillators. 4,063,188, Cl. 331-11.000.
Maximilian Janser, Firma: *See*—
Michelberger, Stefan, 4,062,307, Cl. 112-7.000.
Mayer, Cornelius, to Werkzeugmaschinenfabrik Oerlikon-Buhrle AG. Electrical fuze for projectiles. 4,062,290, Cl. 102-70.20R.
Mayer, James R.: *See*—
Adkins, Richard Wayne; and Mayer, James R., 4,062,411, Cl. 173-115.000.
Mayer, William Norman; Kirchner, Richard Karl; and Andreadakis, Nicholas Cleanthis, to Modern Controls, Inc. Visual display apparatus. 4,063,231, Cl. 340-324.00M.
Mayes, C. C. Fireplace heating system. 4,062,344, Cl. 126-120.000.
Maynard, Thomas C.: *See*—
White, James A.; and Maynard, Thomas C., 4,062,764, Cl. 208-348.000.
McCarroll, Raymond A. Stationary vent apparatus. 4,062,272, Cl. 98-2.120.
McCarthy, James George: *See*—
Greenberg, Burton; and McCarthy, James George, 4,062,533, Cl. 271-10.000.
McClean Anderson, Inc.: *See*—
McClean, William George, 4,062,717, Cl. 156-425.000.
McClean, William George, to McClean Anderson, Inc. Method and apparatus for winding a fiber reinforced bell on the end of a pipe. 4,062,717, Cl. 156-425.000.
McCormick & Company, Incorporated: *See*—
Haak, Mark P., 4,062,979, Cl. 426-44.000.
McCulloch Corporation: *See*—
Dilworth, John Lewis, 4,062,253, Cl. 76-25.00A.
McDonald, John Marshall, to Pye Limited. Sampler control system for chromatograph analytical apparatus. 4,063,310, Cl. 364-900.000.
McDonnell Douglas Corporation: *See*—
Aldridge, Clifton; and Meyer, Michael C., 4,062,876, Cl. 260-391.000.
Hsia, Yukun, 4,063,267, Cl. 357-23.000.
McFarlin, William B., to Allis-Chalmers Corporation. Energy absorbing and pressure applying arrangement for electrical contacts. 4,063,204, Cl. 335-193.000.
McGee, Charles Donald; French, Charles S.; and Robran, David T., to Scott USA, Inc. Boot with hinged upper. 4,062,133, Cl. 36-120.000.
McGowan, Patrick G.: *See*—
Billerbeck, Fred W.; Everett, Lawrence H.; McGowan, Patrick G.; and Pettinga, Paul V., 4,062,986, Cl. 426-633.000.
McGrath, Robert L. Service connection between a main and a meter in a building and method of and equipment for installing the same. 4,062,376, Cl. 137-312.000.
McIlvanie, William A., to United States of America, Interior. Flexible shaft drilling system. 4,062,412, Cl. 175-57.000.
McIntyre, Roger L. Chess game apparatus. 4,062,546, Cl. 273-136.00F.
McKay, Nicholas D., to Helmac Products Corporation. Lineal slide retractable grooming brush. 4,062,083, Cl. 15-106.000.
McLean, James Duncan. Loading device. 4,062,457, Cl. 214-1.0HH.
McMillan, Kenneth R.; and Henderson, Gary A., to General Foods, Limited. Method for sterilization of food products. 4,062,982, Cl. 426-320.000.
McNabb, Charles L. Soap cake construction and manufacture. 4,062,792, Cl. 252-93.000.
McNair, Rhett, to Aqua-Craft, Inc. Mounting bracket. 4,062,289, Cl. 102-48.000.
McNeill, William H.: *See*—
Proud, Joseph M.; Bessett, Richard A.; and McNeill, William H., 4,063,132, Cl. 315-248.000.
McWhorter, Delmer L. Locking load binder. 4,062,206, Cl. 70-14.000.
Mead Corporation, The: *See*—
Culpepper, Will Lester, 4,062,270, Cl. 93-1.100.
Medalist Industries, Inc.: *See*—
Potthoff, David E., 4,062,157, Cl. 52-173.0DS.
Mefferd, Wayne Sherman: *See*—
Saunders, Richard J.; and Mefferd, Wayne Sherman, 4,063,064, Cl. 219-121.00L.
Mehrer, Donald D. Vacuum sander. 4,062,152, Cl. 51-170.00R.
Meier, Ernst: *See*—
Monbaliu, Marcel Jacob; Van Poucke, Raphael Karel; Vrydaghs, Roger Henri; Credner, Hans-Heinrich; and Meier, Ernst, 4,062,683, Cl. 96-56.500.
Meier, John G.; and Vollerin, Bernard, to Fascione, Pietro. Boiler using combustible fluid. 4,062,325, Cl. 122-225.00R.
Meighan, James, to Procter & Gamble Company, The. Support member for shrink wrapped articles. 4,062,448, Cl. 206-432.000.
Meiko Commerce Co., Ltd.: *See*—
Saito, Takashi, 4,062,383, Cl. 140-93.00A.
Meinelt, Kenneth Harold: *See*—
Brown, Ralph Auldon; and Meinelt, Kenneth Harold, 4,062,247, Cl. 74-89.000.
Meisenheimer, Daniel T., Jr. Temperature compensated pressure differential sensing devices, including improved press-to-test and glass header switch mounting. 4,063,057, Cl. 200-83.00Y.
Mekhtiev, Soltan Dzhafarovich; Rizaev, Ramiz Gasan Kuli Ogly; Novruzova, Adilya Shir Mamed Kyzy; Magerramova, Roida Jusuf Kyzy; Suleimanov, Geibat Nagmetovich; Rafiev, Murshud Sary Ogly; Guseinov, Fikret Dzhabrail Ogly; and Sheinin, Viktor Efimovich. Process for producing phthalonitrile. 4,062,885, Cl. 260-465.00C.
Melford Engineering Limited: *See*—
Duncan, Ian James, 4,062,085, Cl. 15-339.000.
Melis, Ugo: *See*—
Romano, Ugo; and Melis, Ugo, 4,062,884, Cl. 260-463.000.
Melton, Conrad. Spreader for particulate material. 4,062,496, Cl. 239-683.000.
Mendelson, Wilford L.: *See*—
Anderson, Elvin L.; Mendelson, Wilford L.; and Wellman, George R., 4,063,023, Cl. 548-342.000.
Mentink, Raymond C.: *See*—
Stivender, Paul M.; Lang, George R.; and Mentink, Raymond C., 4,062,518, Cl. 250-519.000.
Mentzel, Sigmund T., to United States Steel Corporation. Apparatus for measuring camber in rails. 4,062,214, Cl. 72-34.000.
Mercik, Henry J., Jr.; and Armstrong, Lee R., to United Technologies Corporation. Engine cooling system diagnostics. 4,062,231, Cl. 73-116.000.
Merck & Co., Inc.: *See*—
Mrozik, Helmut H., 4,062,952, Cl. 424-228.000.
Remy, David C., 4,062,891, Cl. 260-562.00P.
Merrifield, Daniel B., to U.S. Divers Co. Underwater diving system. 4,062,356, Cl. 128-142.200.
Merril Hermanson: *See*—
Ishii, Kitae, 4,062,392, Cl. 150-1.700.
Meshi, Joseph; and Ponsor, Jeffrey R. Electronic chess clock. 4,062,180, Cl. 58-145.00D.
Messina, Richard: *See*—
Buvet, Rene; Vallot, Roger; Messina, Richard; Gal, Jacques; and Yu, Liang-Tse, 4,062,745, Cl. 204-131.000.
Metals Engineering Incorporated: *See*—
Huff, George L., 4,062,340, Cl. 126-25.00R.
Metcalfe, Robert M.; Boggs, David R.; Thacker, Charles P.; and Lampson, Butler W., to Xerox Corporation. Multipoint data communication system with collision detection. 4,063,220, Cl. 340-147.0LP.
Metildi, Frederic Howell; and Granger, Edward Maurice, to Eastman Kodak Company. Video recording apparatus. 4,063,290, Cl. 360-9.000.
Mettler Instrumente AG: *See*—
Kunz, Peter, 4,062,417, Cl. 177-212.000.
Meyer, Andre R.; Losi, Salvatore; Marka, Erwin; Rudio, Jacques; and Zuntini, Franco, to Oxy Metal Industries Corporation. Gold and gold alloy deposition. 4,062,736, Cl. 204-43.00G.
Meyer, Herbert; and Schienagel, Heinz, to Bellman & Co. K.G. Slide mount. 4,062,140, Cl. 40-152.000.
Meyer, Michael C.: *See*—
Aldridge, Clifton; and Meyer, Michael C., 4,062,876, Cl. 260-391.000.
Meyer, Roth & Pastor Maschinenfabrik GmbH: *See*—
Wust, Toni, 4,063,065, Cl. 219-162.000.
Michaels, Edwin B. Antimicrobial compositions employing certain substituted alanines and certain t-amine oxides. 4,062,976, Cl. 424-319.000.
Michelberger, Stefan, to Maximilian Janser, Firma. Binding machine for materials such as carpets, carpet strips or the like. 4,062,307, Cl. 112-7.000.
Michelson, Gunnar P., to NCR Corporation. Document air valve. 4,062,536, Cl. 271-177.000.
Midcon Pipeline Equipment Co.: *See*—
Birdwell, J. C., 4,062,456, Cl. 214-1.00P.
Middlesworth, Tommy A.: *See*—
Enters, Edward W.; and Middlesworth, Tommy A., 4,062,408, Cl. 172-123.000.
Midway Cap Company: *See*—
Bloom, Bernard; and Lev, Benjamin, 4,062,063, Cl. 2-187.000.
Mikkelsen, Edward: *See*—
Oberheide, Christian H.; Mikkelsen, Edward; and Misthos, George E., 4,062,221, Cl. 73-11.000.
Miknaitis, Sigitas, to GTE Automatic Electric Laboratories Incorporated. Printed wiring card mountable reed relay. 4,063,205, Cl. 335-202.000.
Mikulicz, Michael Z.: *See*—
Burton, Vance P.; and Mikulicz, Michael Z., 4,062,801, Cl. 252-414.000.
Miles, Nelson J.: *See*—
Schwan, Thomas J.; and Miles, Nelson J., 4,063,022, Cl. 548-317.000.
Miller, A. Leslie, to Koppers Company, Inc. Method for weighing a vessel supported by shafts journaled in pressurized bearings. 4,062,415, Cl. 177-208.000.
Miller, Arvo Ivar; and Bjorklund, Fritz Rune, to AB Institutet for Innovationsteknik. Method of reinforcing concrete with fibres. 4,062,913, Cl. 264-24.000.
Miller, Donald E., to General Electric Company. Tape drive motor control circuit. 4,063,139, Cl. 318-331.000.
Miller, Edward H.: *See*—
Eggenberger, Markus A.; and Miller, Edward H., 4,063,228, Cl. 340-239.00R.

Miller, George A.: *See*—
Weiler, Ernest D.; and Miller, George A., 4,062,859, Cl. 260-302.00A.
Miller, Harry C.; and Tickel, Herman Edward, Jr. Rotary plug cylinder lock. 4,062,211, Cl. 70-366.000.
Miller, John W. V., to Owens-Illinois, Inc. Slow rise time write pulse for gas discharge device. 4,063,131, Cl. 315-169.0TV.
Miller, Samuel Jacob; and Smith, Erwin George, to Whirlpool Corporation. Refuse compactor. 4,062,282, Cl. 100-53.000.
Milligan, Thomas A.; and Will, Peter, to Vari-L Company, Inc. Broadband high frequency mixer. 4,063,176, Cl. 325-446.000.
Millman, Robert Savile; and Morley, John Godfrey, to National Research Development Corporation. Energy absorbing composite structures. 4,062,994, Cl. 428-101.000.
Millray, Robert, to Allied Chemical Corporation. Resilient insert for tire inflator. 4,062,287, Cl. 102-39.000.
Millray, Robert, to Allied Chemical Corporation. Initiator for tire inflator. 4,062,288, Cl. 102-39.000.
Mills, Bruce Ernest: *See*—
Davies, David Omri; and Mills, Bruce Ernest, 4,062,183, Cl. 60-39.09F.
Min, Manki. Finger-toe nail clipper provided for catching and holding the clipped-off finger or toe nail portions. 4,062,109, Cl. 30-28.000.
Minami, Norio: *See*—
Kijima, Shizumasa; Yamatsu, Isao; Minami, Norio; and Inai, Yuichi, 4,062,879, Cl. 260-396.00R.
Minnesota Mining and Manufacturing Company: *See*—
Johnson, David G.; and Thorson, Robert D., 4,063,068, Cl. 219-441.000.
Misawa, Rintaro, to Sunwa Sharyo Manufacturing Company Limited. Apparatus for supporting loads in a cart. 4,062,418, Cl. 180-8.00A.
Misthos, George E.: *See*—
Oberheide, Christian H.; Mikkelsen, Edward; and Misthos, George E., 4,062,221, Cl. 73-11.000.
Mitchell, Larry D.: *See*—
Stern, Robert G.; and Mitchell, Larry D., 4,062,075, Cl. 5-63.000.
Mitchell, Mark L., III; and Sharkey, Hubert J., to Emery Industries, Inc. Thermoplastic reinforcing adhesives and substrates coated therewith. 4,062,820, Cl. 260-18.00N.
Mitsubishi Chemical Industries Limited: *See*—
Okamoto, Shosuke; Kikumoto, Ryoji; Ohkubo, Kazuo; Tonomura, Shinji; and Tamao, Yoshikuni, 4,062,963, Cl. 424-267.000.
Tanabe, Yasuo; Toriya, Jun; Sato, Masato; and Shiraga, Ken, 4,062,900, Cl. 260-637.00R.
Mitsui Toatsu Chemicals, Incorporated: *See*—
Yoshimoto, Takeo; Igarashi, Keiichi; Harayama, Takeo; Ura, Masaaki; Toyama, Teruhiko; Morikawa, Osamu; Takasawa, Yoshio; and Hojo, Yoshikata, 4,062,896, Cl. 260-613.00R.
Mitutoyo Manufacturing Co., Ltd.: *See*—
Hirose, Touji, 4,063,086, Cl. 250-237.00G.
Miura, Hiroshi; and Tashiro, Norio, to Tokyo Shibaura Electric Co., Ltd. Magnetron having improved magnetic field distribution in the interaction space and one strap of magnetic and electrical conductive material. 4,063,129, Cl. 315-39.710.
Miyao, Kenji, deceased: *See*—
Nogami, Yoshio; Ooka, Isami; Hamamoto, Tetsuo; Shibano, Hirofumi; Miyao, Kenji, deceased; and Miyao, Mieko, legal heir, 4,062,931, Cl. 423-522.000.
Miyao, Mieko, legal heir: *See*—
Nogami, Yoshio; Ooka, Isami; Hamamoto, Tetsuo; Shibano, Hirofumi; Miyao, Kenji, deceased; and Miyao, Mieko, legal heir, 4,062,931, Cl. 423-522.000.
Miyashita, Tadashi: *See*—
Izawa, Tatsuo; Miyashita, Tadashi; and Hanawa, Fumiaki, 4,062,665, Cl. 65-3.00A.
Miyatuka, Hajime: *See*—
Tamai, Tasuo; Osawa, Sadao; Miyatuka, Hajime; and Yamamoto, Masaya, 4,062,789, Cl. 252-62.10L.
Miyazawa, Mansanori. Protector for the udder of a cow. 4,062,323, Cl. 119-146.000.
Mizuno, Takaharu: *See*—
Kasahara, Keisuke; Hamaoka, Sachio; Katori, Youichi; and Mizuno, Takaharu, 4,062,199, Cl. 62-197.000.
Mizutani, Toshio: *See*—
Fujimoto, Keimei; Ohno, Nobuo; Okuno, Yoshitoshi; Mizutani, Toshio; Ohno, Isao; Hirano, Masachika; Itaya, Nobushige; and Matsuo, Takashi, 4,062,968, Cl. 424-275.000.
Mobil Oil Corporation: *See*—
Audeh, Costandi A.; and Bridger, Robert F., 4,062,763, Cl. 208-264.000.
Chang, Clarence D.; Lang, William H.; and Silvestri, Anthony J., 4,062,905, Cl. 260-682.000.
Orem, William George, 4,062,170, Cl. 53-390.000.
Mochida Seiyaku Kabushiki Kaisha: *See*—
Ogawa, Nobuhisa; and Hashimoto, Masakatsu, 4,062,936, Cl. 424-12.000.
Mochizuki, Hidenobu; Aoki, Teruaki; Matsushita, Takeshi; Hayashi, Hisao; and Okayama, Masanori, to Sony Corporation. Utilizing multiple polycrystalline silicon masks for diffusion and passivation. 4,062,707, Cl. 148-187.000.
Mochizuki, Hidenobu: *See*—
Matsushita, Takeshi; Hayashi, Hisao; Aoki, Teruaki; and Mochizuki, Hidenobu, 4,063,275, Cl. 357-54.000.
Mod, Robert R.; Harris, James A.; Arthur, Jett C., Jr.; Magne, Frank C.; Sumrell, Gene; and Novak, Arthur F., to United States of America, Agriculture. Heterocyclic fatty acid amides. 4,062,841, Cl. 260-239.0BF.
Modafferi, Paul. Knife having an interchangeable blade. 4,062,118, Cl. 30-339.000.
Modern Controls, Inc.: *See*—
Mayer, William Norman; Kirchner, Richard Karl; and Andreadakis, Nicholas Cleanthis, 4,063,231, Cl. 340-324.00M.
Moe, Kjell. Medicine dispensers. 4,062,445, Cl. 206-1.500.
Moe, Richard G., to Allis-Chalmers Corporation. Adjustable moldboard for variable speed plowing. 4,062,410, Cl. 172-708.000.
Moggi, Giovanni: *See*—
Ceccato, Giovanni; Moggi, Giovanni; and Geri, Sergio, 4,062,830, Cl. 260-47.0UP.
Moggi, Pietro Antonio, to Snamprogetti S.p.A. Process for the synthesis of substituted indolenines. 4,062,865, Cl. 260-319.100.
Moirez, Jacques: *See*—
Vinches, Rene; and Moirez, Jacques, 4,062,267, Cl. 89-41.00E.
Moleyre, Jacques: *See*—
Mauvernay, Roland Yves; Busch, Norbert; Moleyre, Jacques; Simond, Jacques; and Monteil, Andre, 4,062,956, Cl. 424-248.570.
Molins Limited: *See*—
Thornton, Leonard, 4,062,492, Cl. 239-125.000.
Momberg, James W., to Consolidated Foods Corporation. Quick release cord storage hook. 4,062,430, Cl. 191-12.00R.
Monbaliu, Marcel Jacob; Van Poucke, Raphael Karel; Vrydaghs, Roger Henri; Credner, Hans-Heinrich; and Meier, Ernst, to AGFA-GEVAERT N.V. Photographic material containing 3-anilino-5-pyrazolylalkylcarbonate or arylcarbonate couplers. 4,062,683, Cl. 96-56.500.
Monsanto Company: *See*—
Franz, John E., 4,062,669, Cl. 71-86.000.
Morgan, Albert W.; Schumacher, Ignatius; and Vaderlinde, William, 4,062,909, Cl. 260-928.000.
Monson, James A.: *See*—
Harris, Robert G.; and Monson, James A., 4,062,475, Cl. 222-95.000.
Montagna, Angelo A., to Gulf Research & Development Company. Selective hydrogenation of cyclopentadiene using a presulfided molybdenum catalyst. 4,062,902, Cl. 260-666.00A.
Montagna, Angelo A.: *See*—
Beuther, Harold; and Montagna, Angelo A., 4,062,757, Cl. 208-61.000.
Montague, Douglas P.: *See*—
Brand, Derek A.; Terzian, Rouben T.; and Montague, Douglas P., 4,062,476, Cl. 222-131.000.
Montanvert, Michel Henri, to Cometa S. A. Method of and apparatus for electronic scanning. 4,063,085, Cl. 250-221.000.
Montedison S.p.A.: *See*—
Ceccato, Giovanni; Moggi, Giovanni; and Geri, Sergio, 4,062,830, Cl. 260-47.0UP.
Cipolli, Roberto; Pieri, Giampiero; and Paffoni, Camillo, 4,062,645, Cl. 8-41.00B.
Ribaldone, Giuseppe; and Grecu, Renato, 4,062,860, Cl. 260-302.00D.
Monteil, Andre: *See*—
Mauvernay, Roland Yves; Busch, Norbert; Moleyre, Jacques; Simond, Jacques; and Monteil, Andre, 4,062,956, Cl. 424-248.570.
Moolenaars, Jan Eric. Sealing device. 4,062,090, Cl. 24-205.11L.
Mooney, Robert J.: *See*—
Stahl, Allen Andrew, 4,062,261, Cl. 83-414.000.
Mooradian, Aram, to Sterling Drug Inc. 3-Hydroxy carbazole derivatives. 4,062,864, Cl. 260-315.000.
Moore Business Forms, Inc.: *See*—
Macaulay, Norman, 4,062,567, Cl. 282-27.500.
Moppett, Charles E.: *See*—
Celmer, Walter D.; Cullen, Walter P.; Moppett, Charles E.; Oscarson, John R.; and Routien, John R., 4,062,945, Cl. 424-122.000.
Moran, Daniel Bryan: *See*—
Allen, George Rodger, Jr.; Hanifin, John William, Jr.; Moran, Daniel Bryan; and Albright, Jay Donald, 4,062,958, Cl. 424-250.000.
Morane, Bruno, to L'Oreal. Container having flexible walls and two chambers which are kept separate until the container is opened. 4,062,477, Cl. 222-145.000.
Moreau, Joel Paul. Safety barrier which is especially useful for motorway and a method of manufacture of the said safety barrier. 4,062,521, Cl. 256-1.000.
Morehouse Industries, Inc.: *See*—
Szkaradek, Edward J., 4,062,599, Cl. 308-1.00A.
Morey, Everett D.; and Dooley, Eddie W., to General Electric Company. Reusable water softener system for clothes washer. 4,062,205, Cl. 68-13.00A.
Morgan, Albert W.; Schumacher, Ignatius; and Vaderlinde, William, to Monsanto Company. Phosphoroamidates. 4,062,909, Cl. 260-928.000.
Morgan, William Morris: *See*—
Barclay, Donald John; and Morgan, William Morris, 4,062,737, Cl. 204-43.00R.
Mori, Fumio: *See*—
Hotta, Hisashi; and Mori, Fumio, 4,062,997, Cl. 428-378.000.
Morikawa, Osamu: *See*—
Yoshimoto, Takeo; Igarashi, Keiichi; Harayama, Takeo; Ura, Masaaki; Toyama, Teruhiko; Morikawa, Osamu; Takasawa, Yoshio; and Hojo, Yoshikata, 4,062,896, Cl. 260-613.00R.
Moritz, Karsten H.: *See*—
Howard, Kent A.; Winter, William E., Jr.; Moritz, Karsten H.; and Paynter, John D., 4,062,762, Cl. 208-211.000.

Morley, John Godfrey: *See—*
Millman, Robert Savile; and Morley, John Godfrey, 4,062,994, Cl. 428-101.000.
Morooka, Yasuo; and Tanifuji, Shinya, to Hitachi, Ltd. Method of automatic width control of hot rolled strips. 4,063,076, Cl. 364-472.000.
Morozumi, Shinji, to Kabushiki Kaisha Suwa Seikosha. Dynamic divider circuit. 4,063,114, Cl. 307-225.00C.
Morris, Charles Nick: *See—*
Allen, Shelby A.; and Black, Neville R., 4,062,314, Cl. 116-85.000.
Morrison, Robert Peter. Photochemical thermal-energy process and generator. 4,062,348, Cl. 126-270.000.
Mortoly, John L., to James L. Taylor Mfg. Co. Work supporting members for glue applying machines. 4,062,320, Cl. 118-239.000.
Morton-Norwich Products, Inc.: *See—*
Schwan, Thomas J.; and Miles, Nelson J., 4,063,022, Cl. 548-317.000.
Motoren- und Turbinen-Union Munchen GmbH: *See—*
Hagen, Hermann, 4,062,184, Cl. 60-39.28P.
Motorola, Inc.: *See—*
Clark, Alfred James, 4,062,243, Cl. 74-10.800.
Conner, Leo Buffington, Jr., 4,063,238, Cl. 343-7.300.
Lesk, Israel Arnold, 4,062,352, Cl. 126-271.000.
Nelson, John Raymond; Shaner, James Robert; and Holcomb, Don Reginald, 4,063,173, Cl. 325-11.000.
Mrozik, Helmut H., to Merck & Co., Inc. Substituted benzenedisulfonamides as anthelmintics. 4,062,952, Cl. 424-228.000.
MTU Motoren-und Turbinen-Union: *See—*
Fehler, Adolf; and Kirschey, Gunter, 4,062,182, Cl. 60-39.650.
Muckenheim, Fritz, to Hoesch Werke Aktiengesellschaft. Method of covering a pipe, especially a steel pipe, and other metallic articles with thermoplastic synthetic material. 4,062,710, Cl. 156-187.000.
Muehldorf, Eugene Igor: *See—*
Eichelberger, Edward Baxter; Muehldorf, Eugene Igor; Walther, Ronald Gene; and Williams, Thomas Walter, 4,063,080, Cl. 235-302.000.
Mueller, Otto, Jr.; and Wood, Dale A., to Massey-Ferguson Inc. Hitch link assembly. 4,062,560, Cl. 280-478.00R.
Mueller, Ruediger, to Siemens Aktiengesellschaft. Fundamental logic circuit. 4,063,273, Cl. 357-43.000.
Muhlfelder, Ludwig; and Schmidt, George Edwin, Jr., to RCA Corporation. Closed loop roll/yaw control system for satellites. 4,062,509, Cl. 244-166.000.
Mulder, Herman, to C. van der Lely N. V. Hay-making machines. 4,062,173, Cl. 56-370.000.
Muller, Erich: *See—*
Nickl, Josef; Narr, Berthold; Muller, Erich; Roch, Josef; and Haarmann, Walter, 4,062,973, Cl. 424-308.000.
Muller, Ingo: *See—*
Sieber, Manfred; Fichter, Manfred; and Muller, Ingo, 4,063,142, Cl. 318-678.000.
Muller, Lutz: *See—*
Frommer, Werner; Junge, Bodo; Keup, Uwe; Muller, Lutz; Puls, Walter; and Schmidt, Delf, 4,062,950, Cl. 424-181.000.
Muller, Manfred: *See—*
Donig, Gerhard; and Muller, Manfred, 4,063,302, Cl. 361-90.000.
Munroe, Ronald G., to Eagle Electric Mfg. Co. Inc. Magnetically latched ground fault circuit interrupter. 4,063,299, Cl. 361-45.000.
Munscher, Dieter, to Deutsche Forschungs- und Versuchsanstalt fur Luft- Und Raumfahrt e.V. Separation device for releasing parachutes. 4,062,581, Cl. 294-83.00A.
Murakami, Harunori: *See—*
Sakurai, Kaoru; Murakami, Harunori; Nakamura, Mitsuhiro; and Kuroyama, Toshinobu, 4,063,247, Cl. 343-704.000.
Murakami, Masuo; Takahashi, Kozo; Murase, Kiyoshi; Mase, Toshiyasu; Ida, Hisashi; and Takenaka, Toichi, to Yamanouchi Pharmaceutical Co., Ltd. 4-Substituted amino-α-aminomethylbenzyl alcohol derivatives. 4,063,025, Cl. 560-29.000.
Murao, Mikio: *See—*
Hatanaka, Kyohei; Inoue, Hajime; Hisatomi, Haruya; Okuda, Koya; Suzuki, Takeshi; Murao, Mikio; and Utiyama, Susumu, 4,062,667, Cl. 65-135.000.
Murase, Kiyoshi: *See—*
Murakami, Masuo; Takahashi, Kozo; Murase, Kiyoshi; Mase, Toshiyasu; Ida, Hisashi; and Takenaka, Toichi, 4,063,025, Cl. 560-29.000.
Murayama, Koichi: *See—*
Fujita, Shigeru; Murayama, Koichi; Kaneda, Toyohito; Harada, Susumu; and Ueda, Toshio, 4,062,742, Cl. 204-55.00R.
Murphy, Francis G., to United States of America, Navy. High power battery with liquid depolarizer. 4,063,006, Cl. 429-119.000.
Murphy, Robert J., Jr.; and Ortman, Dwayne E., to NL Industries, Inc. Rotational viscometer and plastometer. 4,062,225, Cl. 73-60.000.
Murray, John: *See—*
Jennings, Robert Newton; Murray, John; and Hartleben, Donald Herbert, 4,062,576, Cl. 292-258.000.
Muschelknautz, Edgar: *See—*
Brauner, Dieter; Kaluza, Hans-Joachim; and Muschelknautz, Edgar, 4,062,524, Cl. 366-340.000.
Myers, Charles M.: *See—*
Kondur, Nicholas, Jr.; Wilczewski, Robert H.; and Myers, Charles M., 4,062,436, Cl. 197-82.000.
Naert, Andre. Independent, off-line device for the cutting of a roll of paper into sheets. 4,062,257, Cl. 83-110.000.
Nagabhushan, Tattanahalli L.: *See—*
Wright, John J.; Daniels, Peter J. L.; Mallams, Alan K.; and Nagabhushan, Tattanahalli L., 4,062,947, Cl. 424-180.000.
Nagae, Yoshiharu: *See—*
Kawakami, Hideaki; Yoneda, Yutaka; Nagae, Yoshiharu; and Kitazima, Masaaki, 4,062,626, Cl. 350-160.0LC.
Nagano Technical Service Co., Ltd.: *See—*
Saito, Takashi, 4,062,383, Cl. 140-93.00A.
Nagaoka, Tadashi, to Matsushita Electric Industrial Co., Ltd. Pickup device with a composite compliance arm. 4,063,285, Cl. 358-128.000.
Nagata, Masayoshi: *See—*
Takeda, Keiji; Matsumoto, Kenji; Tamura, Hiroshi; and Nagata, Masayoshi, 4,062,685, Cl. 96-88.000.
Nagati, Ali: *See—*
Le Cain, Yves Dominique; Nagati, Ali; and Pellet, Bruno A. F., 4,063,127, Cl. 313-325.000.
Nagoshi, Mitsuru, to Konishiroku Photo Industry Co., Ltd. Fixing apparatus for a copying machine. 4,063,066, Cl. 219-216.000.
Nakagawa, Koithiro: *See—*
Yoshida, Toru; Hosoi, Kameo; Yoshida, Tokuzo; Shimizu, Kazuyuki; and Nakagawa, Koithiro, 4,062,129, Cl. 34-80.000.
Nakamichi Research Inc.: *See—*
Kobayashi, Kozo, 4,063,170, Cl. 324-132.000.
Nakamura, Mitsuhiro: *See—*
Sakurai, Kaoru; Murakami, Harunori; Nakamura, Mitsuhiro; and Kuroyama, Toshinobu, 4,063,247, Cl. 343-704.000.
Nakamura, Shoichi; and Sasaki, Shigeaki, to Ichikawa Woolen Textile Co., Ltd. Apparatus for thickening and extracting the liquid from a sludge. 4,062,779, Cl. 210-386.000.
Nakanose, Tokumitsu. Method for producing a printed thermoplastic resin tape for packaging. 4,062,918, Cl. 264-132.000.
Nakasugi, Hajime: *See—*
Gondo, Hisashi; Nakasugi, Hajime; Kimura, Turugi; and Yamaguti, Masanobu, 4,062,705, Cl. 148-127.000.
Nakazawa, Mikio: *See—*
Kyuma, Tatsuo; and Nakazawa, Mikio, 4,062,893, Cl. 260-577.000.
Nakov, Vesselin Nachev; and Nikolov, Emanuil Hristov, to Institute Po Metaloobrabotvashti Machini. Apparatus for cycleless transportation. 4,062,444, Cl. 198-648.000.
Nalco Chemical Company: *See—*
White, James A.; and Maynard, Thomas C., 4,062,764, Cl. 208-348.000.
Narr, Berthold: *See—*
Nickl, Josef; Narr, Berthold; Muller, Erich; Roch, Josef; and Haarmann, Walter, 4,062,973, Cl. 424-308.000.
National Equipment Corporation: *See—*
Roderick, Ronald R., 4,062,983, Cl. 426-418.000.
National Research Development Corporation: *See—*
Millman, Robert Savile; and Morley, John Godfrey, 4,062,994, Cl. 428-101.000.
National Semiconductor Corporation: *See—*
Laugesen, Ronald C.; and Priel, Ury, 4,063,117, Cl. 307-270.000.
Wilcox, Milton E., 4,063,193, Cl. 331-117.00R.
Navarro, John N., to Thomas & Betts Corporation. Electrical contact. 4,062,615, Cl. 339-98.000.
NCR Corporation: *See—*
Michelson, Gunnar P., 4,062,536, Cl. 271-177.000.
Neal, Donald R.: *See—*
Rider, Aern E.; and Neal, Donald R., 4,063,283, Cl. 358-107.000.
Near, Charles W.: *See—*
Watson, Robert E.; Walden, Jack M.; and Near, Charles W., 4,063,221, Cl. 364-900.000.
Nelson, John Raymond; Shaner, James Robert; and Holcomb, Don Reginald, to Motorola, Inc. Dual mode receiver. 4,063,173, Cl. 325-11.000.
Nemoto, Ryoichi: *See—*
Tsuruta, Hidemasa; and Nemoto, Ryoichi, 4,062,777, Cl. 210-264.000.
Neogi, Sreeman Amar Nath: *See—*
Allan, G. Graham; and Neogi, Sreeman Amar Nath, 4,062,855, Cl. 260-295.0PA.
Neri, Carlo: *See—*
Cipriani, Gioacchino; and Neri, Carlo, 4,063,021, Cl. 548-317.000.
Nero, Leroy William; and Fernsler, Ronald Eugene, to RCA Corporation. Horizontal deflection circuit with timing correction. 4,063,133, Cl. 315-370.000.
New Japan Chemical Company, Limited: *See—*
Kyuma, Tatsuo; and Nakazawa, Mikio, 4,062,893, Cl. 260-577.000.
Newman, Paul Donald: *See—*
Newman, William Eugene, Sr.; and Newman, Paul Donald, 4,062,256, Cl. 82-17.000.
Newman, William Eugene, Sr.; and Newman, Paul Donald. Cross slide turning tool holder. 4,062,256, Cl. 82-17.000.
Newton, Robert E.: *See—*
Dechene, Ronald L.; Grimaldi, Frank G.; and Newton, Robert E., 4,063,153, Cl. 324-30.00R.
NFE International, Ltd.: *See—*
Dupre, George T.; DeMarco, Thomas M.; Borkowski, Lawrence E.; and Waliczek, Harvey, 4,062,664, Cl. 55-319.000.
Nibert, Roger Keith, to Borg-Warner Corporation. Food-compatible lubricant. 4,062,785, Cl. 252-49.600.
Nicholas, Michael G.; Scott, Peter M.; and Dewar, Bruce I. Method of producing nickel coated diamond particles. 4,062,660, Cl. 51-295.000.
Nickl, Josef; Narr, Berthold; Muller, Erich; Roch, Josef; and Haarmann, Walter, to Boehringer Ingelheim GmbH. Sulfur-containing derivatives of cyclohexylphenyl-ethane. 4,062,973, Cl. 424-308.000.

Nicklaus, David F.; Ollinger, James C.; and Petrie, Thomas M., to Armstrong Cork Company. Clip for joining and maintaining alignment of acoustical tile in a starting row thereof. 4,062,162, Cl. 52-481.000.
Nielsen, Anker J., Jr. Locking means for gas valves. 4,062,208, Cl. 70-178.000.
Nier, Johannes; Bollhagen, Heins; and Wocher, Berthold, to Robert Bosch GmbH. Distance measuring system, particularly for spacing of moving vehicles. 4,063,237, Cl. 343-7.0VM.
Niimi, Toshio: *See—*
Ogura, Junshiro; and Niimi, Toshio, 4,063,304, Cl. 361-242.000.
Niki, Hiroshi; Deya, Eiki; Doi, Toru; Ahiko, Kenkichi; and Hayashi, Hiromichi, to Snow Brand Milk Products, Co., Ltd. Method for the production of fish meat powder retaining functional properties of fresh fish meat. 4,062,409, Cl. 426-643.000.
Nikolov, Emanuil Hristov: *See—*
Nakov, Vesselin Nachev; and Nikolov, Emanuil Hristov, 4,062,444, Cl. 198-648.000.
Nilsson, Sven Walter, to SKF Nova AB. Ball bushing. 4,062,602, Cl. 308-6.00C.
Nims, Jerry Curtis: *See—*
Lo, Allen Kwok Wah; and Nims, Jerry Curtis, 4,063,265, Cl. 354-294.000.
Nippon Chemiphar Co., Ltd.: *See—*
Fujimoto, Yasuo; and Tamada, Terumi, 4,062,862, Cl. 260-307.00C.
Nippon Electric Company, Limited: *See—*
Tashiro, Joji; Kawanabe, Tadahiko; Araki, Noboru; Ashihara, Kazuo; Ando, Toshio; Hiragi, Sadayuki; Itoh, Kazuo; Ozawa, Yukio; Odera, Eiichi; and Inoue, Kosuke, 4,063,043, Cl. 179-18.0EA.
Nippon Gakki Seizo Kabushiki Kaisha: *See—*
Yamaga, Eiichi; and Aoki, Eiichiro, 4,062,263, Cl. 84-1.030.
Nippon Kogaku K.K.: *See—*
Maida, Osamu, 4,063,138, Cl. 318-318.000.
Matsui, Sei, 4,062,630, Cl. 350-223.000.
Nippon Oil Co., Ltd.: *See—*
Masunaga, Midori; Kohno, Yoshiki; and Hayashi, Kohji, 4,062,791, Cl. 252-63.000.
Nippon Sheet Glass Co., Ltd.: *See—*
Sakurai, Kaoru; Murakami, Harunori; Nakamura, Mitsuhiro; and Kuroyama, Toshinobu, 4,063,247, Cl. 343-704.000.
Nippon Steel Corporation: *See—*
Gondo, Hisashi; Nakasugi, Hajime; Kimura, Turugi; and Yamaguti, Masanobu, 4,062,705, Cl. 148-127.000.
Hayami, Satohiro; Furukawa, Takashi; and Takeoka, Yoshihiko, 4,062,700, Cl. 148-12.300.
Kitazawa, Yoshio, 4,062,504, Cl. 242-55.000.
Yoshida, Toru; Hosoi, Kameo; Yoshida, Tokuzo; Shimizu, Kazuyuki; and Nakagawa, Koithiro, 4,062,129, Cl. 34-80.000.
Nippon Telegraph and Telephone Public Corporation: *See—*
Izawa, Tatsuo; Miyashita, Tadashi; and Hanawa, Fumiaki, 4,062,665, Cl. 65-3.00A.
Tashiro, Joji; Kawanabe, Tadahiko; Araki, Noboru; Ashihara, Kazuo; Ando, Toshio; Hiragi, Sadayuki; Itoh, Kazuo; Ozawa, Yukio; Odera, Eiichi; and Inoue, Kosuke, 4,063,043, Cl. 179-18.0EA.
Nirschl, Joseph P.: *See—*
Storm, Thomas D.; and Nirschl, Joseph P., 4,062,647, Cl. 8-137.000.
Nishida, Masamitsu; and Ouchi, Hiromu, to Matsushita Electric Industrial Co., Ltd. Piezoelectric ceramic compositions. 4,062,790, Cl. 252-62.900.
Nishimatsu Construction Company, Ltd.: *See—*
Yoshida, Hiroshi; Kuwabara, Yoshitaka; and Tsuchida, Hideo, 4,062,196, Cl. 61-72.700.
Nishimura, Kotaro, to Hitachi, Ltd. Mis decoder providing non-floating outputs with short access time. 4,063,118, Cl. 307-270.000.
Nittetu Chemical Engineering Ltd.: *See—*
Tsuruta, Hidemasa; and Nemoto, Ryoichi, 4,062,777, Cl. 210-264.000.
Nitto Boseki Kabushiki Kaisha: *See—*
Fujita, Shigeru; Murayama, Koichi; Kaneda, Toyohito; Harada, Susumu; and Ueda, Toshio, 4,062,742, Cl. 204-55.00R.
NL Industries, Inc.: *See—*
Murphy, Robert J., Jr.; and Ortman, Dwayne E., 4,062,225, Cl. 73-60.000.
Nogami, Yoshio; Ooka, Isami; Hamamoto, Tetsuo; Shibano, Hirofumi; Miyao, Kenji, deceased; and Miyao, Mieko, legal heir. Process for purifying gases. 4,062,931, Cl. 423-522.000.
Norman, Stanley R. C., to GTE Automatic Electric (Canada) Ltd. Noise detecting circuit. 4,063,180, Cl. 328-112.000.
Norris Industries, Inc.: *See—*
Potter, Dennis G.; Dietrich, Hagen; and Potschka, Joseph, 4,062,579, Cl. 292-348.000.
Northrop Corporation: *See—*
Ault, Earl Rema; Bradford, Robert Spencer, Jr.; Bhaumik, Mani Lal; and Floyd, Danny Doyce, 4,063,191, Cl. 331-94.50G.
Bhaumik, Mani Lal; Bradford, Robert Spencer, Jr.; Ault, Earl Rema; and Stevens, Philip Clyde, 4,063,192, Cl. 331-94.50G.
Northwestern Technology, Inc.: *See—*
Burkhart, Ernest C., 4,063,294, Cl. 360-92.000.
Norton, Robert Ames: *See—*
Roberts, Edward S., 4,062,673, Cl. 75-40.000.
Novak, Arthur F.: *See—*
Mod, Robert R.; Harris, James A.; Arthur, Jett C., Jr.; Magne, Frank C.; Sumrell, Gene; and Novak, Arthur F., 4,062,841, Cl. 260-239.0BF.
Noveroske, Robert L., to Dow Chemical Company, The. Substituted pyridines as systemic plant protectants. 4,062,962, Cl. 424-263.000.
Novruzova, Adilya Shir Mamed Kyzy: *See—*
Mekhtiev, Soltan Dzhafarovich; Rizaev, Ramiz Gasan Kuli Ogly; Novruzova, Adilya Shir Mamed Kyzy; Magerramova, Roida Jusuf Kyzy; Suleimanov, Geibat Nagmetovich; Rafiev, Murshud Sary Ogly; Guseinov, Fikret Dzhabrail Ogly; and Sheinin, Viktor Efimovich, 4,062,885, Cl. 260-465.00C.
Nowatzki, Michael; and Schmitt, Norman J. Band fastening device for fastening a fence to a post. 4,062,523, Cl. 256-47.000.
Nucleus Corporation: *See—*
Zeleney, Leo Z., 4,062,224, Cl. 73-39.000.
Nussbaumer, Henri, to International Business Machines Corporation. Device generating a digital filter and a discrete convolution function therefor. 4,063,082, Cl. 364-728.000.
Nussmeier, Thomas A.: *See—*
Goodwin, Frank E.; and Nussmeier, Thomas A., 4,063,084, Cl. 250-199.000.
Oberheide, Christian H.; Mikkelsen, Edward; and Misthos, George E., to Promotional Marketing Incorporated. Hand-portable shock absorber tester. 4,062,221, Cl. 73-11.000.
O'Brien, William L., to Emery Industries, Inc. Polyester compositions and methods of stabilizing same. 4,062,829, Cl. 260-45.85T.
O'Brien, William L.: *See—*
Mains, Harold E.; Williams, Frederick R.; and O'Brien, William L., 4,062,819, Cl. 260-18.00N.
Occidental Research Corporation: *See—*
Rudy, Samuel, 4,062,767, Cl. 209-212.000.
Oce-Industries Inc.: *See—*
Greenberg, Burton; and McCarthy, James George, 4,062,533, Cl. 271-10.000.
O'Connor, Jon Francis, to Vapor Corporation. Ventilation system for a passenger vehicle. 4,062,273, Cl. 98-8.000.
Odell, Alexander D.; Young, John M.; and Arton, Kenneth A. M., to International Standard Electric Corporation. Schmitt trigger circuit. 4,063,119, Cl. 307-279.000.
Odell, Alexander Douglas, to International Standard Electric Corporation. Logic transfer circuit employing MOS transistors. 4,063,113, Cl. 307-205.000.
O'Dell, David L.; and Shaffer, Leo A., to Wheelabrator-Frye, Inc. Pressure relief valve for a grease gun. 4,062,425, Cl. 184-105.00A.
Odell, John Anthony, to Lemonaid Limited. Slicing machines. 4,062,262, Cl. 83-717.000.
Odera, Eiichi: *See—*
Tashiro, Joji; Kawanabe, Tadahiko; Araki, Noboru; Ashihara, Kazuo; Ando, Toshio; Hiragi, Sadayuki; Itoh, Kazuo; Ozawa, Yukio; Odera, Eiichi; and Inoue, Kosuke, 4,063,043, Cl. 179-18.0EA.
O'Doherty, Ronan Francis: *See—*
Chapman, Lloyd Russell; and O'Doherty, Ronan Francis, 4,063,216, Cl. 340-15.5DS.
Odom Offshore Surveys, Inc.: *See—*
Van de Kop, Franz, 4,063,244, Cl. 343-105.00R.
Offshore Technology Corporation: *See—*
Biewer, Frank N., 4,062,192, Cl. 61-1.00R.
Ofner, Johann: *See—*
Jardin, Hans; and Ofner, Johann, 4,062,636, Cl. 403-13.000.
Ogawa, Hiroshi: *See—*
Aonuma, Masashi; Ogawa, Hiroshi; and Tamai, Yasuo, 4,063,000, Cl. 428-403.000.
Ogawa, Nobuhisa; and Hashimoto, Masakatsu, to Mochida Seiyaku Kabushiki Kaisha. Carrier for immunochemical measurement. 4,062,936, Cl. 424-12.000.
Ogburn, Roy H.: *See—*
Deetz, David R.; and Ogburn, Roy H., 4,062,285, Cl. 101-93.020.
Ogura Jewel Industry Co., Ltd.: *See—*
Ogura, Junshiro, 4,062,176, Cl. 57-77.300.
Ogura, Junshiro, to Ogura Jewel Industry Co., Ltd. High speed rotary body for false-twisting. 4,062,176, Cl. 57-77.300.
Ogura, Junshiro; and Niimi, Toshio. Method of controlling the rotation of a rotary body and apparatus thereof. 4,063,304, Cl. 361-242.000.
O'Hara, Peter J.; and De Leo, Louis P., to United States of America, Army. Deadband error reduction in target sight stabilization. 4,062,126, Cl. 33-236.000.
Ohashi, Shigeo. Switch with an on-off indicating mechanism. 4,063,055, Cl. 200-308.000.
Ohkubo, Kazuo: *See—*
Okamoto, Shosuke; Kikumoto, Ryoji; Ohkubo, Kazuo; Tonomura, Shinji; and Tamao, Yoshikuni, 4,062,963, Cl. 424-267.000.
Ohmiya, Takeo: *See—*
Ohnaka, Kouichi; Yokoi, Shigeo; and Ohmiya, Takeo, 4,063,018, Cl. 536-98.000.
Ohnaka, Kouichi; Yokoi, Shigeo; and Ohmiya, Takeo, to Daicel Ltd. Process for preparing alkali metal salt of carboxymethyl cellulose ether. 4,063,018, Cl. 536-98.000.
Ohno, Isao: *See—*
Fujimoto, Keimei; Ohno, Nobuo; Okuno, Yoshitoshi; Mizutani, Toshio; Ohno, Isao; Hirano, Masachika; Itaya, Nobushige; and Matsuo, Takashi, 4,062,968, Cl. 424-275.000.
Ohno, Nobuo: *See—*
Fujimoto, Keimei; Ohno, Nobuo; Okuno, Yoshitoshi; Mizutani, Toshio; Ohno, Isao; Hirano, Masachika; Itaya, Nobushige; and Matsuo, Takashi, 4,062,968, Cl. 424-275.000.
Ohorodnik, Alexander; Lohmar, Elmar; Gehrmann, Klaus; and Stutzke, Paul, to Hoechst Aktiengesellschaft. Continuous production of 2,5-dioxo-1-oxa-2-phospholanes. 4,062,888, Cl. 260-545.00P.

Ohsawa, Mitsuo, to Sony Corporation. Signal transfer circuit. 4,063,184, Cl. 328-221.000.
Ohta, Hironori: *See—*
Suzuki, Yoshiro; Ohta, Hironori; and Shirasaka, Masuo, 4,062,689, Cl. 106-50.000.
Ohte, Akira; Iwaoka, Hideto; and Araragi, Muneki, to Yokogawa Electric Works, Ltd. Resonance thermometer. 4,063,150, Cl. 324-.50R.
Oil-Rite Corporation: *See—*
Lyden, Frank J., 4,062,424, Cl. 184-65.000.
Okada, Tadashi: *See—*
Hattori, Hajime; Okada, Tadashi; and Kezuka, Eiji, 4,063,280, Cl. 358-22.000.
Okamoto, Shosuke; Kikumoto, Ryoji; Ohkubo, Kazuo; Tonomura, Shinji; and Tamao, Yoshikuni, to Mitsubishi Chemical Industries Limited; and Okamoto, Shosuke. N^2-naphthalenesulfonyl-L-arginine derivatives, and the pharmaceutically acceptable acid addition salts thereof. 4,062,963, Cl. 424-267.000.
Okayama, Masanori: *See—*
Mochizuki, Hidenobu; Aoki, Teruaki; Matsushita, Takeshi; Hayashi, Hisao; and Okayama, Masanori, 4,062,707, Cl. 148-187.000.
Oki Electric Industry Co., Ltd.: *See—*
Tashiro, Joji; Kawanabe, Tadahiko; Araki, Noboru; Ashihara, Kazuo; Ando, Toshio; Hiragi, Sadayuki; Itoh, Kazuo; Ozawa, Yukio; Odera, Eiichi; and Inoue, Kosuke, 4,063,043, Cl. 179-18.0EA.
Okuda, Koya: *See—*
Hatanaka, Kyohei; Inoue, Hajime; Hisatomi, Haruya; Okuda, Koya; Suzuki, Takeshi; Murao, Mikio; and Utiyama, Susumu, 4,062,667, Cl. 65-135.000.
Okuhara, Shinzi; Hosokawa, Yoshikazu; Kamei, Tatsuya; and Suzuki, Masayoshi, to Hitachi, Ltd. Semiconductor switch. 4,063,115, Cl. 307-252.00G.
Okuno, Yoshitoshi: *See—*
Fujimoto, Keimei; Ohno, Nobuo; Okuno, Yoshitoshi; Mizutani, Toshio; Ohno, Isao; Hirano, Masachika; Itaya, Nobushige; and Matsuo, Takashi, 4,062,968, Cl. 424-275.000.
Olejniczak, Lawrence A.: *See—*
Price, Raymond R.; Olejniczak, Lawrence A.; and Olejniczak, Roger V., 4,062,434, Cl. 193-34.000.
Olejniczak, Roger V.: *See—*
Price, Raymond R.; Olejniczak, Lawrence A.; and Olejniczak, Roger V., 4,062,434, Cl. 193-34.000.
Olinkraft, Inc.: *See—*
Parker, Michael S., 4,062,413, Cl. 177-122.000.
Oliver, Theodore A., to Reliance Electric Company. Digital firing control for a converter. 4,063,146, Cl. 323-4.000.
Olivero, Carlo, to Ditta M. El. F.O. Device for direct annealing of metal wire leaving an operating machine. 4,062,528, Cl. 266-103.000.
Ollinger, James C., to Armstrong Cork Company. Alignment and stabilizing clip for acoustical tile installation. 4,062,163, Cl. 52-481.000.
Ollinger, James C.: *See—*
Nicklaus, David F.; Ollinger, James C.; and Petrie, Thomas M., 4,062,162, Cl. 52-481.000.
Olson, Eugene E.; Clendenen, Ronald Lee; and Schlaudt, Charles McCammon, to Shell Oil Company. Process for preparing strontium ferrites. 4,062,922, Cl. 264-294.000.
Olson, Gary E.: *See—*
Popkes, Elvin B.; and Olson, Gary E., 4,062,449, Cl. 206-471.000.
Omote, Osamu: *See—*
Satsumabayashi, Kazuyoshi; Yoshihashi, Akira; Kato, Takeshi; and Omote, Osamu, 4,062,550, Cl. 277-92.000.
O'Neill, Charles Edward: *See—*
Glaum, Gerald Vernon; O'Neill, Charles Edward; and Subramanian, Kohur Nagaraja, 4,062,924, Cl. 423-150.000.
O'Neill, Owen: *See—*
Gapper, Terence John; and O'Neill, Owen, 4,062,593, Cl. 299-1.000.
Ono, Kenichi: *See—*
Kobashi, Toshiyuki; Ozaki, Masahiko; and Ono, Kenichi, 4,062,857, Cl. 260-29.6AN.
Ooka, Isami: *See—*
Nogami, Yoshio; Ooka, Isami; Hamamoto, Tetsuo; Shibano, Hirofumi; Miyao, Kenji, deceased; and Miyao, Mieko, legal heir, 4,062,931, Cl. 423-522.000.
Opportunity Workshop, Inc.: *See—*
Popkes, Elvin B.; and Olson, Gary E., 4,062,449, Cl. 206-471.000.
Optilon W. Erich Heilmann GmbH: *See—*
Heimberger, Helmut, 4,062,100, Cl. 24-427.000.
Orain, Michel Alexandre, to Glaenzer Spicer. Axial stop ring and its application and a method and device for its manufacture. 4,062,603, Cl. 308-217.000.
Orchard, Henry John, to GTE Automatic Electric Laboratories Incorporated. Equalizer circuit. 4,063,187, Cl. 330-107.000.
Ordonez, Marino Paneda. Lifting mechanism for dump trucks. 4,062,592, Cl. 298-22.00B.
O'Regan, Richard: *See—*
Gressitt, Tillman Johnson; and O'Regan, Richard, 4,062,614, Cl. 339-97.00R.
Orem, William George, to Mobil Oil Corporation. Apparatus for loading bags. 4,062,170, Cl. 53-390.000.
Ortize, Eileen S. Hanging chair. 4,062,586, Cl. 297-248.000.
Ortman, Dwayne E.: *See—*
Murphy, Robert J., Jr.; and Ortman, Dwayne E., 4,062,225, Cl. 73-60.000.
Osaka Iron & Steel Co., Ltd.: *See—*
Takai, Kiyoshi, 4,062,531, Cl. 266-226.000.
Osawa, Sadao: *See—*
Tamai, Tasuo; Osawa, Sadao; Miyatuka, Hajime; and Yamamoto, Masaya, 4,062,789, Cl. 252-62.10L.
Oscarson, John R.: *See—*
Celmer, Walter D.; Cullen, Walter P.; Moppett, Charles E.; Oscarson, John R.; and Routien, John R., 4,062,945, Cl. 424-122.000.
Otani, Junji: *See—*
Matsuda, Minoru; Otani, Junji; Kaji, Kenzo; and Masumura, Masanori, 4,062,333, Cl. 123-119.00C.
Otto, Willard G.: *See—*
Hentz, Lyle J.; and Otto, Willard G., 4,062,462, Cl. 214-152.000.
Ouchi, Hiromu: *See—*
Nishida, Masamitsu; and Ouchi, Hiromu, 4,062,790, Cl. 252-62.900.
Oursler, Leonard Lewis, Jr., to RCA Corporation. Radio frequency pulse width amplitude modulation system. 4,063,199, Cl. 332-41.000.
Overbey, William K., Jr.: *See—*
Pasini, Joseph, III; Shuck, Lowell Z.; and Overbey, William K., Jr., 4,062,404, Cl. 166-259.000.
Overbury, Francis G.; and Barton, Paul, to International Standard Electric Corporation. Doppler navigation system with reference signal source diversity. 4,063,242, Cl. 343-100.0SA.
Owens-Corning Fiberglas Corporation: *See—*
Eisenberg, Arnold J.; Klink, Jerome P.; Symborski, Alex P.; and White, Gerald L., 4,062,501, Cl. 242-18.00G.
Varrasso, Eugene C.; and Maddux, John F., 4,063,027, Cl. 13-6.000.
Owens-Illinois, Inc.: *See—*
Miller, John W. V., 4,063,131, Cl. 315-169.0TV.
Oxy Metal Industries Corporation: *See—*
Meyer, Andre R.; Losi, Salvatore; Marka, Erwin; Rudio, Jacques; and Zuntini, Franco, 4,062,736, Cl. 204-43.00G.
Oyama, George Clement. Cigarette filter pipe kit. 4,062,446, Cl. 206-223.000.
Ozaki, Masahiko: *See—*
Kobashi, Toshiyuki; Ozaki, Masahiko; and Ono, Kenichi, 4,062,857, Cl. 260-29.6AN.
Ozawa, Yukio: *See—*
Tashiro, Joji; Kawanabe, Tadahiko; Araki, Noboru; Ashihara, Kazuo; Ando, Toshio; Hiragi, Sadayuki; Itoh, Kazuo; Ozawa, Yukio; Odera, Eiichi; and Inoue, Kosuke, 4,063,043, Cl. 179-18.0EA.
Pacciarini, Antonio: *See—*
Manini, Silvio; and Pacciarini, Antonio, 4,062,458, Cl. 214-16.40R.
Pacific Power and Protein, Inc.: *See—*
Mager, David; Heronemus, William E.; and Woodhead, Peter M. J., 4,062,189, Cl. 60-641.000.
Paddison, Eric; Perez-Cavero, Leonardo; and Wilson, Christopher George, to General Electric Company Limited, The. Protective relay arrangements. 4,063,300, Cl. 361-78.000.
Paetsch, Werner: *See—*
Gupta, Jutta Das; Markwitz, Wernhard; and Paetsch, Werner, 4,063,174, Cl. 325-304.000.
Paffoni, Camillo: *See—*
Cipolli, Roberto; Pieri, Giampiero; and Paffoni, Camillo, 4,062,645, Cl. 8-41.00B.
Pagani, Giorgio, to Snamprogetti S.p.A. Apparatus for desalinating sea water. 4,062,734, Cl. 202-236.000.
Pagava, Dali Georgievna: *See—*
Andrianov, Kuzma Andrianovich; Topchiashvili, Mikhail Izmailovich; Khananashvili, Lotary Mikhailovich; Danilov, Alexei Vladimirovich; Ryabtsev, Evgeny Ivanovich; Pagava, Dali Georgievna; Bodzhgua, Dzhimsher Shalvovich; Grigoriev, Veniamin Demyanovich; and Fridland, Vladimir Mikhailovich, 4,062,813, Cl. 252-511.000.
Pahlen, Lars Christer: *See—*
Carlsson, Jan-Olov; Johansson, Ernst Elof Ake; and Pahlen, Lars Christer, 4,062,611, Cl. 339-17.00M.
Pahr, Gustav Oskar. Building brick and wall structure. 4,062,159, Cl. 52-421.000.
Pakyov, Dobri Tzvetkov: *See—*
Chuparov, Nikola Tomov; Pakyov, Dobri Tzvetkov; Papazov, Peter Nachev; and Savov, Tzvetan Mladenov, 4,062,219, Cl. 72-422.000.
Palmer, Roger C., to John Fluke Manufacturing Company, Inc. Method and apparatus for microwave frequency counting. 4,063,169, Cl. 324-79.00D.
Pangburn, George O.: *See—*
Perotti, John J.; and Pangburn, George O., 4,062,255, Cl. 82-45.000.
Panzarella, John M. Patio wok stove. 4,062,341, Cl. 126-41.00R.
Papazov, Peter Nachev: *See—*
Chuparov, Nikola Tomov; Pakyov, Dobri Tzvetkov; Papazov, Peter Nachev; and Savov, Tzvetan Mladenov, 4,062,219, Cl. 72-422.000.
Papenfuhs, Theodor: *See—*
Hahnke, Manfred; and Papenfuhs, Theodor, 4,062,877, Cl. 260-391.000.
Papenroth, Wolfgang: *See—*
Hemmerich, Heinz-Peter; Rosenkranz, Hans Jurgen; Papenroth, Wolfgang; and Klaeren, Aloys, 4,062,692, Cl. 106-300.000.
Papp, Gyula: *See—*
Harsanyi, Kalman; Takacs, Kalman; Kiss, Pal; Szekeres, Laszlo; Papp, Gyula; and Benedek, Eva, 4,062,850, Cl. 260-286.00R.
Pardis, Robert J., to Joslyn Mfg. and Supply Co. Buried cable fault locator with earth potential indicator and pulse generator. 4,063,161, Cl. 324-52.000.

Pardo, Pierre; and Pruvot, Francois, to Sofermo. Self-contained modular pivot, notably for robots. 4,062,601, Cl. 308-2.00R.
Parke, Davis & Company: *See—*
Tinney, Francis John, 4,062,835, Cl. 260-112.5LH.
Parker, Michael S., to Olinkraft, Inc. Feeder unit and method for use in a weighing system. 4,062,413, Cl. 177-122.000.
Parsons, William H., to Teleflex Incorporated. Motion transmitting remote control assembly. 4,062,251, Cl. 74-501.00R.
Pasini, Joseph, III; Shuck, Lowell Z.; and Overbey, William K., Jr., to United States of America, Energy Research and Development Administration. Method for in situ combustion. 4,062,404, Cl. 166-259.000.
Patterson, Paul Louis, to Varian Associates, Inc. Assymetric cylinder electron capture detector. 4,063,156, Cl. 324-33.000.
Patterson, W. W., III; and Grapes, Eugene F. Wire rope binder. 4,062,520, Cl. 254-161.000.
Pauley, Merle R.: *See—*
Brolund, Theodore F.; Rolland, Burton A.; and Pauley, Merle R., 4,063,059, Cl. 219-68.000.
Paynter, John D.: *See—*
Howard, Kent A.; Winter, William E., Jr.; Moritz, Karsten H.; and Paynter, John D., 4,062,762, Cl. 208-211.000.
Peak, William H., to Matula, Donald P., a part interest. Powder moisture meter. 4,062,228, Cl. 73-74.000.
Pearce, Edgar: *See—*
Kyte, Colin Trevor; Lewis, Geoffrey John; Pearce, Edgar; and Hume, Keith, 4,062,991, Cl. 427-297.000.
Peck, Kenneth E., Jr., to Globe Tool and Engineering Company, The. Wire tension control apparatus especially for coil winding machines. 4,062,502, Cl. 242-7.030.
Peeri, Menachem. Electrically heatable floor carpet. 4,063,069, Cl. 219-545.000.
Peets, Robert Seymour, to Singer Company, The. Convertible sewing machine cabinets. 4,062,606, Cl. 312-237.000.
Pellet, Bruno A. F.: *See—*
Le Cain, Yves Dominique; Nagati, Ali; and Pellet, Bruno A. F., 4,063,127, Cl. 313-325.000.
Pelz, Karel; Bruderlein, Francois T.; and Humber, Leslie G., to Ayerst McKenna and Harrison Ltd. Process for the resolution of certain octahydrobenzocycloheptapyridoisoquinolinols. 4,062,851, Cl. 260-289.00C.
Pendleton, Robert G.: *See—*
Kaiser, Carl; and Pendleton, Robert G., 4,062,961, Cl. 424-258.000.
Peng, Luke Shih-Cheng; and Yu, Herbert Chia-Chen. Structure for foldable baby carriage. 4,062,555, Cl. 280-42.000.
Peniche, Hector. Disposable funnel apparatus. 4,062,387, Cl. 141-337.000.
Pennwalt Corporation: *See—*
MacLeay, Ronald Edward; and Sheppard, Chester Stephen, 4,063,012, Cl. 526-219.000.
Sandler, Stanley Robert, 4,063,024, Cl. 560-26.000.
Pensack, Joseph Michael: *See—*
Spicer, Larry Dean; Pensack, Joseph Michael; Wilbur, Robert Daniel; and Demkovich, Gary Michael, 4,062,856, Cl. 260-295.50B.
Pepping, Roelf, to Landustrie Sneek Machinefabriek Elektrotechniek B.V. Device for the purification of waste water. 4,062,911, Cl. 261-91.000.
Perahia, Avraham, to Sperry Rand Corporation. Magnetic head switching matrix with bi-directional current capability. 4,063,293, Cl. 360-62.000.
Perez-Cavero, Leonardo: *See—*
Paddison, Eric; Perez-Cavero, Leonardo; and Wilson, Christopher George, 4,063,300, Cl. 361-78.000.
Perfect, Frederick H., to Reading Alloys, Inc., a part interest. Tungsten-titanium-aluminum master alloy. 4,062,677, Cl. 75-176.000.
Performance Industries, Inc.: *See—*
Boyeson, Eyvind, 4,062,331, Cl. 123-73.00B.
Perkins, Donald W.; and Smith, Marvin W., to General Electric Company. Actively switched damping circuit. 4,063,306, Cl. 363-17.000.
Perotti, John J.; and Pangburn, George O. Center turning tool. 4,062,255, Cl. 82-45.000.
Perr, Julius P.; Schutz, Peter W.; Badgley, Patrick R.; and Valdmanis, Edgars, to Cummins Engine Company, Inc. Fuel mileage indicator. 4,062,230, Cl. 73-114.000.
Perr, Julius P., to Cummins Engine Company, Inc. Compression brake for internal combustion engine. 4,062,332, Cl. 123-97.00B.
Perry, Walter Merton. Container with attached closure. 4,062,471, Cl. 220-269.000.
Pesnelle, Pierre; and Teisseire, Paul Jose, to Societe Anonyme Roure Bertrand Dupont. Preparation of novel keto-esters. 4,062,878, Cl. 260-395.000.
Peter, Jakob; Thatcher, Perry D.; and Steele, Kenneth L., to Koppers Company, Inc. Apparatus for feeding and transporting paperboard blanks. 4,062,532, Cl. 271-6.000.
Peters, Abram, to Allatt Limited. Paver attachment hitch. 4,062,559, Cl. 280-460.00R.
Peters, Peter A. C., to United States of America, Navy. Portable seating apparatus. 4,062,605, Cl. 312-235.00R.
Peters, Richard W., to Industrial Research Products, Inc. Audio system with enhanced spatial effect. 4,063,034, Cl. 179-1.00J.
Peterson, Christian C., to Cega, Inc. Smoke detector. 4,063,227, Cl. 340-237.00S.
Peterson, Myron Lester. Plating mechanism. 4,062,752, Cl. 204-213.000.
Peterson, Russell I., Jr., to Conair, Inc. Comminution device. 4,062,500, Cl. 241-285.00R.
Petigara, Ramesh B.: *See—*
Yale, Harry Louis; and Petigara, Ramesh B., 4,062,846, Cl. 260-256.50R.
Petitpierre, Jean Claude: *See—*
Garner, Robert; and Petitpierre, Jean Claude, 4,062,866, Cl. 260-326.14R.
Petrie, Thomas M.: *See—*
Nicklaus, David F.; Ollinger, James C.; and Petrie, Thomas M., 4,062,162, Cl. 52-481.000.
Pettinga, Paul V.: *See—*
Billerbeck, Fred W.; Everett, Lawrence H.; McGowan, Patrick G.; and Pettinga, Paul V., 4,062,986, Cl. 426-633.000.
Pfeiffer, Hans F.: *See—*
Lehmann, Rudolf; Pfeiffer, Hans F.; Schindler, Joachim; and Schreiber, Wolfgang, 4,062,732, Cl. 195-66.00R.
Pfeiffer, Roland; Bongert, Wilhelm; and Waldhecker, Heinz-Dieter, to Klockner-Humboldt-Deutz Aktiengesellschaft. Method for the continuous drying of wet, granular and/or lumpy materials and device for carrying out the method. 4,062,127, Cl. 34-1.000.
Pfizer Inc.: *See—*
Celmer, Walter D.; Sciavolino, Frank C.; Cullen, Walter P.; and Routien, John B., 4,062,944, Cl. 424-117.000.
Celmer, Walter D.; Cullen, Walter P.; Moppett, Charles E.; Oscarson, John R.; and Routien, John R., 4,062,945, Cl. 424-122.000.
Gymer, Geoffrey E., 4,062,966, Cl. 424-273.00R.
Hammen, Philip D., 4,062,844, Cl. 260-256.40Q.
Holland, Gerald F., 4,062,960, Cl. 424-258.000.
Phelps, Howard N., Jr.; and Power, Dennis O., to United States of America, Navy. Antifouling damping system for sonar domes. 4,062,422, Cl. 181-198.000.
Phelpstead, James William Percy: *See—*
Crellin, Robin Arthur; Jenkins, Christopher Robert; and Phelpstead, James William Percy, 4,062,368, Cl. 131-265.000.
Philagro S.A.: *See—*
Sauli, Michel, 4,062,951, Cl. 424-200.000.
Phillips Petroleum Company: *See—*
Box, E. O., Jr.; and Farha, Floyd, Jr., 4,062,772, Cl. 210-63.00R.
Hutchinson, William Milton, deceased, 4,062,795, Cl. 252-171.000.
Phillips, Ronald L. Horticultural container assembly with saucer drainage and ventilation passage. 4,062,147, Cl. 47-71.000.
Philmac Denki Kabushiki Kaisha: *See—*
Maejima, Husazo, 4,062,499, Cl. 241-259.000.
Piazzola, Vincent. Safety guard. 4,062,391, Cl. 144-251.00A.
Pichler, Engelbert: *See—*
Manner, Erich; Adler, Klaus; Pichler, Engelbert; Bauer, Johann; and Sommer, Hans, 4,062,715, Cl. 156-334.000.
Pieck, Robert, to Raffinerie Tirlemontoise. Method and apparatus for treating sugar-works molasses. 4,062,695, Cl. 127-9.000.
Pielkenrood, Jacob, to Pielkenrood-Vinitex B. V. Method and a device for promoting the separation of components suspended in a liquid. 4,062,775, Cl. 210-189.000.
Pielkenrood-Vinitex B. V.: *See—*
Pielkenrood, Jacob, 4,062,775, Cl. 210-189.000.
Pierce, Arthur. Telephone handset cord storage apparatus. 4,062,608, Cl. 339-5.0RL.
Pierce, James K.; and Whipple, Sharon S., to Dow Chemical Company, The. Chloro-pyridinyloxymethyl esters of thiocyanic acid. 4,062,853, Cl. 260-294.80G.
Pieri, Giampiero: *See—*
Cipolli, Roberto; Pieri, Giampiero; and Paffoni, Camillo, 4,062,645, Cl. 8-41.00B.
Pierret, James A.: *See—*
Marsh, Harold G.; and Pierret, James A., 4,062,679, Cl. 75-245.000.
Pilgram, Kurt H. G., to Shell Oil Company. Herbicidal heterocyclic compounds, compositions, and methods. 4,062,670, Cl. 71-88.000.
Pilkington Brothers Limited: *See—*
Litherland, Kenneth Leslie; Maguire, Phillip; and Cheetham, Colin Jones, 4,062,690, Cl. 106-98.000.
Pinkham, Alice: *See—*
Pinkham, Warren; and Pinkham, Alice, 4,062,584, Cl. 297-193.000.
Pinkham, Warren; and Pinkham, Alice. Combination seat and carrying case. 4,062,584, Cl. 297-193.000.
Pipitone, Roberto; and Gnocchi, Colombo, to Societa Italiana Telecomunicazioni Siemens S.p.A. Piezoelectric electroacoustic transducer. 4,063,049, Cl. 179-110.00A.
Pirolli, Claude, to Telecommunications Radioelectriques et Telephoniques T.R.T. Device for connecting optical fibers. 4,062,620, Cl. 350-96.00C.
Pitchford, Peter R. Snap pallet. 4,062,301, Cl. 108-56.100.
Pizzolato, Giacomo: *See—*
Confalone, Pasquale Nicholas; Lollar, Elizabeth Dianne; Pizzolato, Giacomo; and Uskokovic, Milan Radoje, 4,062,868, Cl. 260-332.20A.
Plastic Products, Inc.: *See—*
Jacobs, Lawrence O'Quinn, 4,062,519, Cl. 254-141.000.
Plempel, Manfred: *See—*
Draber, Wilfried; Buchel, Karl Heinz; Regel, Erik; and Plempel, Manfred, 4,062,959, Cl. 424-250.000.
Pohl, Felix: *See—*
Sonnenschein, Hans; and Pohl, Felix, 4,062,912, Cl. 261-116.000.
Polaroid Corporation: *See—*
Bloom, Stanley M., 4,062,867, Cl. 260-329.0ME.
Pollmeier, Konrad; and Hannemann, Franz, to Durkoppwerke GmbH. Automatic feed device for sewing machine. 4,062,309, Cl. 112-121.150.
Polsky, Norman; Burnett, Frank; Gerner, James L.; Heying, Norman J.;

and Lieberman, Edgar M., to Fixtures Manufacturing Corporation. Chair structure. 4,062,590, Cl. 297-455.000.
Ponsor, Jeffrey R.: *See—*
Meshi, Joseph; and Ponsor, Jeffrey R., 4,062,180, Cl. 58-145.00D.
Poot, Albert Lucien: *See—*
Laridon, Urbain Leopold; Van Brandt, Rene Alois; and Poot, Albert Lucien, 4,062,682, Cl. 96-29.00L.
Popkes, Elvin B.; and Olson, Gary E., to Opportunity Workshop, Inc. Skin package with transparent back window. 4,062,449, Cl. 206-471.000.
Popper, Peter. Bag holder. 4,062,604, Cl. 312-211.000.
Port Authority of N.Y. & N.J., The: *See—*
Horowitz, Fred, 4,062,400, Cl. 165-2.000.
Potschka, Joseph: *See—*
Potter, Dennis G.; Dietrich, Hagen; and Potschka, Joseph, 4,062,579, Cl. 292-348.000.
Potter, Cyril S. Inflatable body suit. 4,062,079, Cl. 9-332.000.
Potter, Dennis G.; Dietrich, Hagen; and Potschka, Joseph, to Norris Industries, Inc. Knob attachment for door latch. 4,062,579, Cl. 292-348.000.
Potter Electric Signal Co.: *See—*
Baker, Robert K., 4,063,056, Cl. 200-332.000.
Ward, David M., 4,062,377, Cl. 137-523.000.
Potthoff, David E., to Medalist Industries, Inc. Dock shelter. 4,062,157, Cl. 52-173.0DS.
Potts, Gordon Oliver, to Sterling Drug Inc. Process for using a steroid compound. 4,062,954, Cl. 424-241.000.
Poulsen, Ib Finn, to Coloplast International A/S. Bilaminar ostomy sealing disc. 4,062,361, Cl. 128-283.000.
Power, Dennis O.: *See—*
Phelps, Howard N., Jr.; and Power, Dennis O., 4,062,422, Cl. 181-198.000.
Power, George Edward; and Wulfekotter, Dedley, to Formica Corporation. Flocked high or low pressure decorative laminate component. 4,062,992, Cl. 428-90.000.
Powers, Gilbert L., to W. B. Van Nest Company. Defrosting apparatus. 4,062,277, Cl. 99-483.000.
PPG Industries, Inc.: *See—*
Chang, Wen-Hsuan; and Ammons, Vernon G., 4,062,887, Cl. 560-185.000.
Tilton, Robert L., 4,062,666, Cl. 65-99.00A.
Zlochower, Isaac A., 4,063,001, Cl. 428-410.000.
Pratt, Roy E.: *See—*
Castagnos, Leonce F., Jr.; and Pratt, Roy E., 4,062,759, Cl. 208-113.000.
Precision Machine Products, Inc.: *See—*
Clingman, William H., Jr., 4,062,236, Cl. 73-190.0CV.
Precision Valve Corporation: *See—*
Jones, Gerald Dovaston, 4,062,517, Cl. 251-322.000.
Pressmaster AB: *See—*
Wiener, Hans, 4,062,218, Cl. 72-409.000.
Preus, Paul. High freeboard barrier construction for water carried pollutants. 4,062,191, Cl. 61-1.00F.
Price, Raymond R.; Olejniczak, Lawrence A.; and Olejniczak, Roger V., to Rochester Silo, Inc. Dormer door silo. 4,062,434, Cl. 193-34.000.
Priefert, Marvin J. Material loading trailer apparatus. 4,062,454, Cl. 214-1.0HH.
Priel, Ury: *See—*
Laugesen, Ronald C.; and Priel, Ury, 4,063,117, Cl. 307-270.000.
Prince, Paul R. Toilet urine deflector. 4,062,070, Cl. 4-1.000.
Procter & Gamble Company, The: *See—*
Goodrich, Calvin C., 4,062,486, Cl. 206-626.000.
Meighan, James, 4,062,448, Cl. 206-432.000.
Storm, Thomas D.; and Nirschl, Joseph P., 4,062,647, Cl. 8-137.000.
Prodger, Brian S.: *See—*
Holden, John E.; and Prodger, Brian S., 4,062,144, Cl. 46-151.000.
Produits Chimiques Ugine Kuhlmann: *See—*
Foulletier, Louis; and Lalu, Jean-Pierre, 4,062,849, Cl. 260-279.00R.
Proell, Wayne A.: *See—*
Applegate, James M.; Holbrook, Stanford T.; Proell, Wayne A.; and Selin, Clifford E., 4,062,928, Cl. 423-392.000.
Promotional Marketing Incorporated: *See—*
Oberheide, Christian H.; Mikkelsen, Edward; and Misthos, George E., 4,062,221, Cl. 73-11.000.
Prop, Jozef M. G.: *See—*
De Rooij, Abraham H.; Prop, Jozef M. G.; and Wassen, Willem J., 4,062,927, Cl. 423-387.000.
Proud, Joseph M.; Bessett, Richard A.; and McNeill, William H., to GTE Laboratories Inc. DC powered microwave discharge in an electrodeless light source. 4,063,132, Cl. 315-248.000.
Pruvot, Francois: *See—*
Pardo, Pierre; and Pruvot, Francois, 4,062,601, Cl. 308-2.00R.
PTI - Dolco: *See—*
Robins, Milton, 4,062,575, Cl. 292-67.000.
Pullen, Keats A., Jr., to United States of America, Army. Electric arc interrupter and circuit breaker. 4,063,297, Cl. 361-14.000.
Pullman Incorporated: *See—*
Adler, Franklin P., 4,062,460, Cl. 214-58.000.
Snyder, Richard C.; and Wold, Harold A., 4,062,297, Cl. 105-480.000.
Puls, Walter: *See—*
Frommer, Werner; Junge, Bodo; Keup, Uwe; Muller, Lutz; Puls, Walter; and Schmidt, Delf, 4,062,950, Cl. 424-181.000.
Purdue Research Foundation: *See—*
Tsao, George T.; and Chen, Li Fu, 4,063,017, Cl. 536-57.000.
Purinton, Edwin C.; Holzinger, Carl S.; and Auger, Robert, to Magnavox Company, The. Balanced field theft detection system. 4,063,230, Cl. 340-280.000.
Pye Limited: *See—*
McDonald, John Marshall, 4,063,310, Cl. 364-900.000.
Pyke, Thomas R.: *See—*
Biggs, Candice B.; Pyke, Thomas R.; and Wovcha, Merle G., 4,062,729, Cl. 195-51.00S.
Quadracast Systems, Inc.: *See—*
Dorren, Louis, 4,062,547, Cl. 274-9.00A.
Quality Measurement Systems, Inc.: *See—*
Lacagnina, John M.; Weber, Ernest G.; Rucinski, David W.; and Robinson, Bruce R., 4,062,120, Cl. 33-166.000.
Quets, Jean Marie: *See—*
Fay, Homer; Quets, Jean Marie; and Hatwell, Henri, 4,062,765, Cl. 209-1.000.
Quinn, Edward J., to Hooker Chemicals & Plastics Corporation. Metal plating of plastics. 4,063,004, Cl. 428-626.000.
Radiochemical Centre Limited, The: *See—*
Edwards, John Christopher; and Hemesley, Paul, 4,062,733, Cl. 195-103.700.
Raffinerie Tirlemontoise: *See—*
Pieck, Robert, 4,062,695, Cl. 127-9.000.
Rafiev, Murshud Sary Ogly: *See—*
Mekhtiev, Soltan Dzhafarovich; Rizaev, Ramiz Gasan Kuli Ogly; Novruzova, Adilya Shir Mamed Kyzy; Magerramova, Roida Jusuf Kyzy; Suleimanov, Geibat Nagmetovich; Rafiev, Murshud Sary Ogly; Guseinov, Fikret Dzhabrail Ogly; and Sheinin, Viktor Efimovich, 4,062,885, Cl. 260-465.00C.
Rambacher, Paul; and Make, Siegfried, to Diamalt Aktiengesellschaft. Process for preparing orotic acid. 4,062,847, Cl. 260-260.000.
Ramer, James L. Transportable bridge and method. 4,062,081, Cl. 14-1.000.
Ramesohl, Hubert: *See—*
Brachthauser, Kunibert; Ramesohl, Hubert; Beisner, Klaus; and Herchenbach, Horst, 4,062,691, Cl. 106-100.000.
Rando, Joseph F.; Kahn, Michael E.; Heumann, Thomas E.; and Luebbers, Scott S., to Spectra-Physics, Inc. System for controlling attitude of laser beam plane. 4,062,634, Cl. 356-248.000.
Rank, William J. Variable volume pump for internal combustion engine. 4,062,335, Cl. 123-139.0AP.
Rank Xerox Ltd.: *See—*
Real, Eric John, 4,062,300, Cl. 108-53.500.
Sasahara, Akira, 4,062,534, Cl. 271-174.000.
Rapp, Felix, Jr.; and Barron, James M., to DIY-Sol, Inc. Solar collector unit. 4,062,346, Cl. 126-270.000.
Rau, Rama A.: *See—*
Suau, Jean A.; and Rau, Rama A., 4,063,151, Cl. 324-6.000.
Rausch, John J.; and Van Thyne, Ray J., to Surface Technology Corporation. Abrasion resistant filament wear guides and method of making same. 4,062,484, Cl. 226-196.000.
Ray, George F., to Liskey Architectural Mfg. Inc. Bracket. 4,062,511, Cl. 248-300.000.
Raymond Lee Organization, Inc., The: *See—*
Slusher, John G., 4,062,372, Cl. 135-66.000.
Taylor, Ronald D., 4,062,583, Cl. 296-76.000.
Raytheon Company: *See—*
Schmoock, James C., 4,063,116, Cl. 307-254.000.
RCA Corporation: *See—*
Ban, Vladimir Sinisa; and Gilbert, Stephen Lee, 4,062,318, Cl. 118-49.000.
Crowle, Brian, 4,063,149, Cl. 323-4.000.
Dingwall, Andrew Gordon Francis, 4,063,274, Cl. 357-53.000.
Gale, Michael Thomas, 4,062,628, Cl. 350-162.00R.
Gooen, Kenneth Herbert, 4,063,277, Cl. 357-38.000.
Harbert, Donald Duane; and Kamerer, George Roy, 4,063,033, Cl. 179-1.00P.
Hughes, Richard Henry, 4,063,128, Cl. 313-409.000.
Mawhinney, Daniel David, 4,063,188, Cl. 331-11.000.
Muhlfelder, Ludwig; and Schmidt, George Edwin, Jr., 4,062,509, Cl. 244-166.000.
Nero, Leroy William; and Fernsler, Ronald Eugene, 4,063,133, Cl. 315-370.000.
Oursler, Leonard Lewis, Jr., 4,063,199, Cl. 332-41.000.
Sabisky, Edward Stephen; and Anderson, Charles Hammond, 4,063,158, Cl. 324-224.000.
Stewart, Roger Green, 4,063,225, Cl. 365-156.000.
Sutphin, Eldon Marvin, Jr., 4,062,232, Cl. 73-117.200.
Rea, La Verne. Insect bite relief preparation. 4,062,937, Cl. 424-47.000.
Reading Alloys, Inc.: *See—*
Perfect, Frederick H., 4,062,677, Cl. 75-176.000.
Real, Eric John, to Rank Xerox Ltd. Multipurpose pallet system. 4,062,300, Cl. 108-53.500.
Reavis, Robert Philmore, Jr.: *See—*
Doty, Donald Judson; and Reavis, Robert Philmore, Jr., 4,062,610, Cl. 339-75.00M.
Recule, Albert: *See—*
Bouffenie, Jacques; Campargue, Roger; and Recule, Albert, 4,063,067, Cl. 219-374.000.
Reed, Gerald C. Solar water heater. 4,062,350, Cl. 126-271.000.
Reering, Jan G.: *See—*
Altenhoner, Klaus; Jansen, Walter; Knop, Klaus; and Reering, Jan G., 4,062,529, Cl. 266-156.000.

Reeves, George I., to Beckman Instruments, Inc. Method and apparatus for timing light calibration. 4,063,152, Cl. 324-16.00T.
Regel, Erik: *See—*
Draber, Wilfried; Buchel, Karl Heinz; Regel, Erik; and Plempel, Manfred, 4,062,959, Cl. 424-250.000.
Regie Nationale des Usines Renault: *See—*
Rivere, Jean-Pierre, 4,062,337, Cl. 123-140.0MC.
Reid, Walter L., Jr.: *See—*
Lynch, Francis deSales; Reid, Walter L., Jr.; and Jepson, John W., 4,063,259, Cl. 354-120.000.
Reinker, Dieter: *See—*
Liechti, Hans Wilhelm; and Reinker, Dieter, 4,062,836, Cl. 260-154.000.
Reiss, James M.: *See—*
Foster, Edward Henry; and Reiss, James M., 4,062,353, Cl. 128-1.100.
Reist, Jurg: *See—*
Henych, Ivo; Fischer, Erwin; and Reist, Jurg, 4,062,398, Cl. 164-337.000.
Reliance Electric Company: *See—*
Oliver, Theodore A., 4,063,146, Cl. 323-4.000.
Remy, David C., to Merck & Co., Inc. N-formyl-2,3,5,6-dibenzobicyclo[5.1.0]octan-4-methylamine. 4,062,891, Cl. 260-562.00P.
Research Corporation: *See—*
Kornreich, Philipp G.; and Kowel, Stephen T., 4,063,281, Cl. 358-105.000.
Reynolds Leasing Corporation: *See—*
Johnson, Robert C., 4,062,367, Cl. 131-134.000.
Rhee, Jhoon Goo. Protective device for the arm and hand useful in operating an open vehicle. 4,062,073, Cl. 2-16.000.
Ribaldone, Giuseppe; and Grecu, Renato, to Montedison S.p.A. Process for preparing 3,4-dicyano-1,2,5-thiadiazole. 4,062,860, Cl. 260-302.00D.
Rice, Robert L.; and Mast, Aquila D., to Sperry Rand Corporation. Raising and lowering mechanism for the rear chamber in a crop material roll forming machine. 4,062,172, Cl. 56-343.000.
Rich, Daniel H.; and Gurwara, Sweet K., to Wisconsin Alumni Research Foundation. Solid phase synthesis of protected peptides. 4,062,746, Cl. 204-159.120.
Rich, Joseph A.; and Westendorp, Willem F., to General Electric Company. Vacuum arc discharge device with tapered rod electrodes. 4,063,126, Cl. 313-146.000.
Richton International Corporation: *See—*
Klein, Ludolf, 4,062,212, Cl. 70-456.00B.
Rider, Aern E.; and Neal, Donald R., to Chemetron Corporation. Automatic envelope measuring system. 4,063,283, Cl. 358-107.000.
Riede, Gerhard, to Gambro AG. Device for diffusing matter between two fluids via semi-permeable diaphragms. 4,062,778, Cl. 210-321.00B.
Riedel, Tilo, to S.A. Etablissements Francois Salomon & Fils. Device for securing a pair of skis together. 4,062,553, Cl. 280-11.37A.
Riedel, Tilo, to S.A. Etablissements Francois Salomon & Fils. Ski brake with stirrup-shaped spring wire and stretcher therefor. 4,062,562, Cl. 280-605.000.
Riem, Roland Hendrick: *See—*
Dieterman, Alfred Johannes; and Riem, Roland Hendrick, 4,062,824, Cl. 260-30.40R.
Riggs, Robert F.: *See—*
Isbister, Eric J.; Klepach, Robert J.; Riggs, Robert F.; and Tucker, Terry A., 4,063,240, Cl. 343-9.000.
Riihinen, Jaakko, to Valmet Oy. Roll having magnetic deflection compensation. 4,062,097, Cl. 29-116.0AD.
Rink, John P., to United States of America, Energy Research and Development Administration. CO_2 laser. 4,063,190, Cl. 331-94.50G.
Rio, Russell L., to United States of America, Army. Fan drive system. 4,062,329, Cl. 123-41.120.
Risley, Hugh Arthur: *See—*
Snoke, Roy Eugene; Risley, Hugh Arthur; and Goodhue, Charles Thomas, 4,062,731, Cl. 195-62.000.
Rivere, Jean-Pierre, to Regie Nationale des Usines Renault; and Automobiles Peugeot. Electro-pneumatic device for regulating the supply of air to an internal combustion engine. 4,062,337, Cl. 123-140.0MC.
Rizaev, Ramiz Gasan Kuli Ogly: *See—*
Mekhtiev, Soltan Dzhafarovich; Rizaev, Ramiz Gasan Kuli Ogly; Novruzova, Adilya Shir Mamed Kyzy; Magerramova, Roida Jusuf Kyzy; Suleimanov, Geibat Nagmetovich; Rafiev, Murshud Sary Ogly; Guseinov, Fikret Dzhabrail Ogly; and Sheinin, Viktor Efimovich, 4,062,885, Cl. 260-465.00C.
Rober, Herbert E.: *See—*
Stapleton, Thomas T.; and Rober, Herbert E., 4,062,633, Cl. 356-159.000.
Robert Bosch GmbH: *See—*
Nier, Johannes; Bollhagen, Heins; and Wocher, Berthold, 4,063,237, Cl. 343-7.0VM.
Roberts, Arthur Bruce. Portable bidets. 4,062,072, Cl. 4-7.000.
Roberts, Edward S., to Norton, Robert Ames. Flash smelting of iron with production of hydrogen of hydrogenation quality. 4,062,673, Cl. 75-40.000.
Roberts, Thomas G., to United States of America, Army. Self-protecting infrared detector with a continuously variable attenuator. 4,063,096, Cl. 250-343.000.
Roberts, William Owen, to Du Pont de Nemours, E. I., and Company. Catalytic coating composition. 4,062,806, Cl. 252-430.000.
Robertson, James R., to Harper Electric Furnace Corporation. Conveyor for heat treating furnace. 4,062,459, Cl. 214-21.000.
Robins, Milton, to PTI - Dolco. Gate latch locking device. 4,062,575, Cl. 292-67.000.
Robinson, Bruce R.: *See—*
Lacagnina, John M.; Weber, Ernest G.; Rucinski, David W.; and Robinson, Bruce R., 4,062,120, Cl. 33-166.000.
Robran, David T.: *See—*
McGee, Charles Donald; French, Charles S.; and Robran, David T., 4,062,133, Cl. 36-120.000.
Roch, Josef: *See—*
Nickl, Josef; Narr, Berthold; Muller, Erich; Roch, Josef; and Haarmann, Walter, 4,062,973, Cl. 424-308.000.
Rochester Silo, Inc.: *See—*
Price, Raymond R.; Olejniczak, Lawrence A.; and Olejniczak, Roger V., 4,062,434, Cl. 193-34.000.
Rochester Telephone Corporation: *See—*
Heffernan, Stuart D.; and Maring, Donald G., 4,063,037, Cl. 179-7.10R.
Rockwell International Corporation: *See—*
Kammerer, Leo P.; Fabian, Gordon R.; and Burns, Roger D., 4,063,140, Cl. 318-561.000.
Vasile, Carmine F., 4,063,202, Cl. 333-72.000.
Rodeman, Donald W.: *See—*
Endres, Thomas E.; and Rodeman, Donald W., 4,063,039, Cl. 179-15.0BT.
Roden, Harry F. Eight wheel skateboard. 4,062,557, Cl. 280-87.04A.
Roderick, Ronald R., to National Equipment Corporation. Method for maintaining heat and moisture in food. 4,062,983, Cl. 426-418.000.
Roepke, Wallace W.; Lindroth, David P.; and Wilson, Richard J., to United States of America, Interior. Automatic face transfer linear cutting rotary head continuous mining machine and method. 4,062,595, Cl. 299-18.000.
Rogers, Herbert E., Jr.: *See—*
Dreyer, Dennis G.; Foley, Edward M.; and Rogers, Herbert E., Jr., 4,062,678, Cl. 75-228.000.
Rogerson, Jerry B.; and Simmons, Calvin J., to Ford Motor Company. Carburetor fuel bowl vent control. 4,062,910, Cl. 261-34.00A.
Rogowski, Robert S.; and Long, Edward R., Jr., to United States of America, National Aeronautics and Space Administration. Thermoluminescent aerosol analysis. 4,062,650, Cl. 23-232.00E.
Rohm and Haas Company: *See—*
Haag, Thomas M.; Brendley, William H., Jr.; and Martorano, Richard, 4,062,821, Cl. 260-29.4UA.
Law, Andrew B., 4,062,946, Cl. 424-134.000.
Weiler, Ernest D.; and Miller, George A., 4,062,859, Cl. 260-302.00A.
Rohr Industries, Inc.: *See—*
Schubach, Theodor C., 4,062,161, Cl. 52-461.000.
Rohr, Willy; and Kohler, Lothar, to Ruti Machinery Works Ltd. Extending carrier for looms with removal of the filling yarn from stationary bobbins. 4,062,382, Cl. 139-448.000.
Rohrs, Donald L.: *See—*
Downing, Harold A.; Rohrs, Donald L.; and Collins, Donald L., 4,062,209, Cl. 70-226.000.
Rojahn, Fred H.; and Lichtenberg, Jose, to U. Zip International, S. A. Method of making a stringer element for a slide fastener. 4,062,919, Cl. 264-145.000.
Rolfo-Fontana, Gudrun Birgitta Margareta. Reagent unit intended for microanalyses of standard type and device and method for its production. 4,062,652, Cl. 23-253.00R.
Rolland, Burton A.: *See—*
Brolund, Theodore F.; Rolland, Burton A.; and Pauley, Merle R., 4,063,059, Cl. 219-68.000.
Rolls-Royce Limited: *See—*
Davies, David Omri; and Mills, Bruce Ernest, 4,062,183, Cl. 60-39.09F.
Dawson, Lindsay Grahame, 4,062,190, Cl. 60-682.000.
Romano, Ugo; and Melis, Ugo, to ANIC, S.p.A. Process for the preparation of dialkylcarbonates. 4,062,884, Cl. 260-463.000.
Ronci, Mary Rachel; and Heaton, Robert Bray. Cassette. 4,063,102, Cl. 250-482.000.
Roper, Ralph E., to Wallace Expanding Machines, Inc. Process for expanding wheel components. 4,062,215, Cl. 72-62.000.
Rose, Carl John: *See—*
Cole, William Gwyn; Goudie, Alexander Crossan; and Rose, Carl John, 4,062,978, Cl. 424-331.000.
Rose, Jack Howard, to Massey-Ferguson Inc. Cutter blade assembly. 4,062,171, Cl. 56-295.000.
Rosefair Electronics Limited: *See—*
Cohen, Mordecai Elias, 4,062,294, Cl. 104-149.000.
Rosenkranz, Hans Jurgen: *See—*
Hemmerich, Heinz-Peter; Rosenkranz, Hans Jurgen; Papenroth, Wolfgang; and Klaeren, Aloys, 4,062,692, Cl. 106-300.000.
Ross, Richard J.: *See—*
Akkerman, Neil H.; and Ross, Richard J., 4,062,406, Cl. 166-323.000.
Roth, Gunter, to Dornier System GmbH. Extensible rod. 4,062,156, Cl. 52-111.000.
Roth, Marvin E.; and Vallere, Donald J., to Western Electric Co., Inc. Vacuum treating apparatus. 4,062,319, Cl. 118-49.100.
Rouhiainen, Leo: *See—*
Malkki, Yrjo; Rouhiainen, Leo; Mattsson, Raimo; and Markkanen, Pertti, 4,062,730, Cl. 195-62.000.
Roussel, Michel: *See—*
Kunicki, Maryan; and Roussel, Michel, 4,062,672, Cl. 75-30.000.

Routien, John B.: *See—*
Celmer, Walter D.; Sciavolino, Frank C.; Cullen, Walter P.; and Routien, John B., 4,062,944, Cl. 424-117.000.
Routien, John R.: *See—*
Celmer, Walter D.; Cullen, Walter P.; Moppett, Charles E.; Oscarson, John R.; and Routien, John R., 4,062,945, Cl. 424-122.000.
Rowe, William Guy. Three-dimensional display devices. 4,063,233, Cl. 340-324.00A.
Rubber Research Institute of Malaysia, The Board of the: *See—*
Knight, Geoffrey Thomas, 4,062,906, Cl. 260-739.000.
Rubin, David, to United States of America, Navy. Broadband millimeter wave amplifier. 4,063,186, Cl. 330-287.000.
Rucinski, David W.: *See—*
Lacagnina, John M.; Weber, Ernest G.; Rucinski, David W.; and Robinson, Bruce R., 4,062,120, Cl. 33-166.000.
Rudio, Jacques: *See—*
Meyer, Andre R.; Losi, Salvatore; Marka, Erwin; Rudio, Jacques; and Zuntini, Franco, 4,062,736, Cl. 204-43.00G.
Rudny, Donald F.; and Lindstedt, Dennis H., to International Harvester Company. Toroidal multifluid segmented heat exchanger. 4,062,401, Cl. 165-125.000.
Rudy, Samuel, to Occidental Research Corporation. Material handling system. 4,062,767, Cl. 209-212.000.
Rueb, Gunter, to American Zettler, Inc. Electronic instrument case. 4,062,469, Cl. 220-268.000.
Ruehrwein, Robert Arthur. Process for III-V compound epitaxial crystals utilizing inert carrier gas. 4,062,706, Cl. 148-175.000.
Ruggles, Wesley, Jr.: *See—*
Willcocks, Martin Edmund George, 4,063,032, Cl. 179-1.0GQ.
Rushmere, John Derek, to Du Pont de Nemours, E. I., and Company. Acid nickel electroplating additive therefor and method of making said additive. 4,062,738, Cl. 204-49.000.
Ruti Machinery Works Ltd.: *See—*
Rohr, Willy; and Kohler, Lothar, 4,062,382, Cl. 139-448.000.
Rutter, Harold T., to Sunnen Products Company. Fixture for setting the stationary gaging contact on a dial bore gage. 4,062,122, Cl. 33-169.00R.
Ryabtsev, Evgeny Ivanovich: *See—*
Andrianov, Kuzma Andrianovich; Topchiashvili, Mikhail Izmailovich; Khananashvili, Lotary Mikhailovich; Danilov, Alexei Vladimirovich; Ryabtsev, Evgeny Ivanovich; Pagava, Dali Georgievna; Bodzhgua, Dzhimsher Shalvovich; Grigoriev, Veniamin Demyanovich; and Fridland, Vladimir Mikhailovich, 4,062,813, Cl. 252-511.000.
Ryckaert, Andre: *See—*
Lolivier, Jacques; and Ryckaert, Andre, 4,062,901, Cl. 260-652.50R.
Ryder, Gary R. Toe clip for ski boots. 4,062,134, Cl. 36-132.000.
Rylander, H. Grady: *See—*
Taylor, H. Lyndon; Rylander, H. Grady; and Story, James L., 4,062,354, Cl. 128-2.00R.
S & C Electric Company: *See—*
Bernatt, Joseph, 4,063,208, Cl. 337-248.000.
S. C. Johnson & Son, Inc.: *See—*
Harris, Robert G.; and Monson, James A., 4,062,475, Cl. 222-95.000.
Sabielny, Richard C.: *See—*
Lorenzi, Donald E.; Sabielny, Richard C.; and Schroeder, Kenneth W., 4,063,157, Cl. 324-213.000.
Sabisky, Edward Stephen; and Anderson, Charles Hammond, to RCA Corporation. Gaussmeter. 4,063,158, Cl. 324-224.000.
Sachs Systemtechnik GmbH: *See—*
Eibl, Volker, 4,062,754, Cl. 204-268.000.
Saeki, Keiso: *See—*
Matsukawa, Hiroharu; and Saeki, Keiso, 4,062,799, Cl. 252-316.000.
Safco Products Co.: *See—*
Krizan, Bradford J., 4,062,302, Cl. 108-60.000.
Safford, George J.; and Lentz, James A., to Xerox Corporation. Method for extending the functional life of polymers used in xerographic devices. 4,062,812, Cl. 252-500.000.
St. John, Richard C., to Aspiro, Inc. Quick release centrifugal clutch construction. 4,062,433, Cl. 192-104.00R.
Saito, Takashi, to Meiko Commerce Co., Ltd.; and Nagano Technical Service Co., Ltd. Bag tying apparatus. 4,062,383, Cl. 140-93.00A.
Sakamoto, Motoyoshi, to Kabushiki Kaisha Suwa Seikosha. Electronic timepiece. 4,062,178, Cl. 58-23.00R.
Sakamoto, Yoshio: *See—*
Kojima, Shinichi; and Sakamoto, Yoshio, 4,063,185, Cl. 330-255.000.
Sakurai, Kaoru; Murakami, Harunori; Nakamura, Mitsuhiro; and Kuroyama, Toshinobu, to Nippon Sheet Glass Co., Ltd.; and Toyota Jidosha Kogyo Kabushiki Kaisha. Heater glass sheet with broad band receiver antennae. 4,063,247, Cl. 343-704.000.
Saliman, Paul M.: *See—*
Kuderna, Jerome G.; and Saliman, Paul M., 4,062,649, Cl. 23-230.00R.
Sanders, James Milton: *See—*
Sprecker, Mark A.; Vock, Manfred Hugo; Schmitt, Frederick Louis; Hall, John B.; and Sanders, James Milton, 4,062,894, Cl. 260-586.00R.
Sandler, Stanley Robert, to Pennwalt Corporation. Polyoxyalkylene fluoroalkyltrimellitates. 4,063,024, Cl. 560-26.000.
Sandoz Ltd.: *See—*
Mauric, Claudine; and Wolf, Rainer, 4,062,687, Cl. 106-15.0FP.
Sano, Tomoharu: *See—*
Tetsuka, Iwao; Kato, Kusuo; Takahashi, Yasuyuki; and Sano, Tomoharu, 4,062,539, Cl. 172-9.000.
Sanyo Electric Co., Ltd.: *See—*
Takahara, Ichiro; Yabu, Tadahiko; and Hujita, Jihei, 4,063,286, Cl. 358-128.000.
Sargent & Greenleaf, Inc.: *See—*
Uyeda, Tim M., 4,062,210, Cl. 70-268.000.
Sartorius-Werke GmbH: *See—*
Berg, Christoph; and Stadler, Eberhard, 4,062,416, Cl. 177-210.0EM.
Sasahara, Akira, to Rank Xerox Ltd. Stripper arrangement for removing various sized copy sheets from fuser roll. 4,062,534, Cl. 271-174.000.
Sasaki, Shigeaki: *See—*
Nakamura, Shoichi; and Sasaki, Shigeaki, 4,062,779, Cl. 210-386.000.
Sato, Masato: *See—*
Tanabe, Yasuo; Toriya, Jun; Sato, Masato; and Shiraga, Ken, 4,062,900, Cl. 260-637.00R.
Sato, Toshio: *See—*
Hoshimi, Susumu; and Sato, Toshio, 4,063,137, Cl. 318-212.000.
Satsuka, Akito: *See—*
Komatsubara, Michimasa; Waku, Toshihiko; Fukai, Tetsuya; and Satsuka, Akito, 4,063,201, Cl. 333-70.00R.
Satsumabayashi, Kazuyoshi; Yoshihashi, Akira; Kato, Takeshi; and Omote, Osamu, to Kabushiki Kaisha Komatsu Seisakusho. Seal assembly with backup ring. 4,062,550, Cl. 277-92.000.
Sauli, Michel, to Philagro S.A. Organophosphorus compounds, compositions containing them and their method of use. 4,062,951, Cl. 424-200.000.
Saunders, Richard J.; and Mefferd, Wayne Sherman, to Coherent Radiation. Apparatus for tracking moving workpiece by a laser beam. 4,063,064, Cl. 219-121.00L.
Saupe, Wolfram, to Hoechst Aktiengesellschaft. Apparatus and process for membrane filtration. 4,062,771, Cl. 210-23.00F.
Savov, Tzvetan Mladenov: *See—*
Chuparov, Nikola Tomov; Pakyov, Dobri Tzvetkov; Papazov, Peter Nachev; and Savov, Tzvetan Mladenov, 4,062,219, Cl. 72-422.000.
Sawyer, Edgar W., Jr., to International Telephone and Telegraph Corporation. Stable particulate suspensions. 4,062,694, Cl. 106-309.000.
Sawyer, Patrick Frank; and Child, Robin Edward, to Girling Limited. Vehicle load sensing arrangements. 4,062,597, Cl. 303-6.00C.
Schaar, Charles H., to Colgate-Palmolive Company. Disposable and self adjustable diapers. 4,062,362, Cl. 128-287.000.
Schadenberg, Hendrik, to Shell Oil Company. Lubricating compositions containing a di(chlorophenyl) ester of an aliphatic dicarboxylic acid. 4,062,788, Cl. 252-54.600.
Schaeffer, John I.: *See—*
Kaufmann, Herbert O.; and Schaeffer, John I., 4,062,158, Cl. 52-71.000.
Schaufele, Gunter Richard, to Hewlett-Packard GmbH. Dosing device for a liquid chromatograph. 4,062,240, Cl. 73-422.0GC.
Schefczik, Ernst, to BASF Aktiengesellschaft. Naphtholactam dyes. 4,062,845, Cl. 260-256.50R.
Schering Corporation: *See—*
Mallams, Alan K., 4,063,015, Cl. 536-17.000.
Wright, John J.; Daniels, Peter J. L.; Mallams, Alan K.; and Nagabhushan, Tattanahalli L., 4,062,947, Cl. 424-180.000.
Scherrer, Hanspeter: *See—*
Boller, Arthur; Cereghetti, Marco; and Scherrer, Hanspeter, 4,062,798, Cl. 252-299.000.
Schienagel, Heinz: *See—*
Meyer, Herbert; and Schienagel, Heinz, 4,062,140, Cl. 40-152.000.
Schiffman, Jerome D.; and Kleinke, Bernard L., to Schiffman, Jerome D.; and Shlaes, Milton. Telephone mounted calculator. 4,063,046, Cl. 179-90.00K.
Schimmeyer, Werner K. Collapsible golf cart. 4,062,564, Cl. 280-652.000.
Schindler, Joachim: *See—*
Lehmann, Rudolf; Pfeiffer, Hans F.; Schindler, Joachim; and Schreiber, Wolfgang, 4,062,732, Cl. 195-66.00R.
Schlaudt, Charles McCammon: *See—*
Olson, Eugene E.; Clendenen, Ronald Lee; and Schlaudt, Charles McCammon, 4,062,922, Cl. 264-294.000.
Schlig, Eugene Stewart; and Stilwell, George Raymond, Jr., to International Business Machines Corporation. Nondestructive cursors in AC plasma displays. 4,063,223, Cl. 365-116.000.
Schlumberger Technology Corporation: *See—*
Suau, Jean A.; and Rau, Rama A., 4,063,151, Cl. 324-6.000.
Schmerling, Louis, to UOP Inc. Removal of hydroxyl-, carboxy-, or amino substituents from aromatic compounds using a group VI B catalyst. 4,062,904, Cl. 260-668.00R.
Schmidt, Delf: *See—*
Frommer, Werner; Junge, Bodo; Keup, Uwe; Muller, Lutz; Puls, Walter; and Schmidt, Delf, 4,062,950, Cl. 424-181.000.
Schmidt, George Edwin, Jr.: *See—*
Muhlfelder, Ludwig; and Schmidt, George Edwin, Jr., 4,062,509, Cl. 244-166.000.
Schmitt, Frederick Louis: *See—*
Sprecker, Mark A.; Vock, Manfred Hugo; Schmitt, Frederick Louis; Hall, John B.; and Sanders, James Milton, 4,062,894, Cl. 260-586.00R.

Schmitt, Norman J.: *See—*
Nowatzki, Michael; and Schmitt, Norman J., 4,062,523, Cl. 256-47.000.
Schmitz, Josef. Vibration device for silos for bulk materials. 4,062,527, Cl. 366-114.000.
Schmitz, Norbert L.: *See—*
Hucker, David J.; and Schmitz, Norbert L., 4,063,144, Cl. 363-43.00A.
Schmoock, James C., to Raytheon Company. Temperature compensated current source. 4,063,116, Cl. 307-254.000.
Schneider, Franz; and Braitinger, Helmut, to L. Schuler GmbH. Control system for the initiation and/or termination of operating steps of perforating, punching, cutting and shaping presses. 4,062,213, Cl. 72-24.000.
Schodel, Christian, to Blendax-Werke R. Schneider GmbH & Co. Cleaning agents for dentures. 4,062,793, Cl. 252-99.000.
Scholin, Harold W., to Scholin Industries, Inc. Fitting assembly. 4,062,574, Cl. 285-340.000.
Scholin Industries, Inc.: *See—*
Scholin, Harold W., 4,062,574, Cl. 285-340.000.
Scholl, Inc.: *See—*
Hsiung, Du Yung, 4,062,131, Cl. 36-44.000.
Schopf, Dieter: *See—*
Gauch, Hermann; and Schopf, Dieter, 4,062,310, Cl. 112-280.000.
Schrantz, Robert D.; and Johnson, Janice R. Method and means for transcribing medical test data. 4,062,568, Cl. 283-66.00R.
Schreiber, Wolfgang: *See—*
Lehmann, Rudolf; Pfeiffer, Hans F.; Schindler, Joachim; and Schreiber, Wolfgang, 4,062,732, Cl. 195-66.00R.
Schroeder, Kenneth W.: *See—*
Lorenzi, Donald E.; Sabielny, Richard C.; and Schroeder, Kenneth W., 4,063,157, Cl. 324-213.000.
Schroeder, Wolfgang: *See—*
Laurer, Peter Rudolf; Schroeder, Wolfgang; Hoffmann, Herwig; and Lingk, Heinz, 4,062,899, Cl. 260-635.00Y.
Schubach, Theodor C., to Rohr Industries, Inc. Strip for retaining two extrusions in selected position. 4,062,161, Cl. 52-461.000.
Schubeler, Kenneth Erwin: *See—*
Jeremiah, Edward Scott; Schubeler, Kenneth Erwin; and Kline, Eric Randall, 4,063,311, Cl. 364-900.000.
Schubert, Jurgen, to Gebr. Eickhoff, Maschinenfabrik und Eisengiesserei m.b.H. Shutoff control apparatus for a conveyor. 4,062,442, Cl. 198-502.000.
Schulmerich Carillons, Inc.: *See—*
Malta, Jacob H., 4,062,317, Cl. 116-171.000.
Schumacher, Ernst E. Set of basic printing inks for producing color tones by printing methods. 4,062,688, Cl. 106-20.000.
Schumacher, Frank A.; and Elliott, Marvel A., to General Electric Company. Automatic icemaker including means for minimizing the supercooling effect. 4,062,201, Cl. 62-353.000.
Schumacher, Ignatius: *See—*
Morgan, Albert W.; Schumacher, Ignatius; and Vaderlinde, William, 4,062,909, Cl. 260-928.000.
Schuman, Mark, to American Standard Inc. Gas analyzer. 4,063,094, Cl. 250-338.000.
Schutz, Peter W.: *See—*
Perr, Julius P.; Schutz, Peter W.; Badgley, Patrick R.; and Valdmanis, Edgars, 4,062,230, Cl. 73-114.000.
Schwaebel, Richard: *See—*
Boehmke, Gunther; and Schwaebel, Richard, 4,062,643, Cl. 8-1.00A.
Schwan, Thomas J.; and Miles, Nelson J., to Morton-Norwich Products, Inc. Antisecretory 2-imidazolidinones. 4,063,022, Cl. 548-317.000.
Schwarzmann, Gunter: *See—*
Holtschmidt, Ulrich; and Schwarzmann, Gunter, 4,062,965, Cl. 424-273.00R.
Schweitzer, Edmund O., Jr. Fault indicator responsive to flow of fault current in a conductor when power flow is in one direction only. 4,063,171, Cl. 324-133.000.
Sciaraffa, Michael A.; and Cermak, Gregory S., to Standard Oil Company (Indiana). Phenolic stabilization of maleic anhydride. 4,062,874, Cl. 260-346.760.
Sciavolino, Frank C.: *See—*
Celmer, Walter D.; Sciavolino, Frank C.; Cullen, Walter P.; and Routien, John B., 4,062,944, Cl. 424-117.000.
Scifres, Donald R.; Burnham, Robert D.; and Streifer, William, to Xerox Corporation. Leaky wave diode laser. 4,063,189, Cl. 331-94.50H.
Sclippa, Ferruccio, to Simac S.p.A. High cutting speed flying shear machine. 4,062,259, Cl. 83-285.000.
Scondo, Christian: *See—*
Kunst, Helmut; and Scondo, Christian, 4,062,702, Cl. 148-14.000.
Scott, Howard L., to Widner College. Perfluorocarbon resins in a hair and scalp conditioning and cleansing composition. 4,062,939, Cl. 424-70.000.
Scott-King, Christopher John: *See—*
Scott-King, Lyonel, 4,062,514, Cl. 249-41.000.
Scott-King, Lyonel, to Scott-King, Christopher John. Shuttering panel system. 4,062,514, Cl. 249-41.000.
Scott, Peter M.: *See—*
Nicholas, Michael G.; Scott, Peter M.; and Dewar, Bruce I., 4,062,660, Cl. 51-295.000.
Scott USA, Inc.: *See—*
McGee, Charles Donald; French, Charles S.; and Robran, David T., 4,062,133, Cl. 36-120.000.
Sealectro Corporation: *See—*
Evans, David Roger, 4,062,612, Cl. 339-94.00A.
Sedco Systems, Incorporated: *See—*
Debski, Thomas R.; and Gaudio, Joseph, 4,063,248, Cl. 343-727.000.
Segundo, Mariano; Auerbach, Rodolfo; and Castellazzo, Rolando Antonio Juan, to Ancase S.A. High luster interlock fabric incorporating producer twist yarns. 4,062,204, Cl. 66-196.000.
Seiscom Delta Inc.: *See—*
Chapman, Lloyd Russell; and O'Doherty, Ronan Francis, 4,063,216, Cl. 340-15.5DS.
Selin, Clifford E.: *See—*
Applegate, James M.; Holbrook, Stanford T.; Proell, Wayne A.; and Selin, Clifford E., 4,062,928, Cl. 423-392.000.
Sen Gupta, Achintya Kumar, to Lever Brothers Company. Process for refining crude glyceride oils by membrane filtration. 4,062,882, Cl. 260-428.500.
Senninger Irrigation, Inc.: *See—*
Healy, Mark, 4,062,494, Cl. 239-230.000.
Sensormatic Electronics Corporation: *See—*
Welsh, John; Vaughan, Richard N.; and Gordon, Lloyd L., 4,063,229, Cl. 340-280.000.
Serneblad, Lars Gunnar: *See—*
Anderson, Leif P. R.; and Serneblad, Lars Gunnar, 4,062,394, Cl. 160-172.000.
Serone Laboratories, Inc.: *See—*
Donini, Pietro, 4,062,942, Cl. 424-100.000.
Setzer, William C.: *See—*
Sperry, Philip R.; Setzer, William C.; and Damon, Lloyd E., 4,062,704, Cl. 148-32.000.
Seward, William W. Textile and method of making same. 4,062,993, Cl. 428-93.000.
Seyler, Jay Kenneth: *See—*
Hughes, John Lawrence; Seyler, Jay Kenneth; and Liu, Robert Chung-Huang, 4,062,815, Cl. 260-8.000.
Shaffer, Howard Richard; and Zimmerman, John Aaron, Jr., to AMP Incorporated. Flat flexible cable connector assembly including insulation piercing contacts. 4,062,616, Cl. 339-99.00R.
Shaffer, Leo A.: *See—*
O'Dell, David L.; and Shaffer, Leo A., 4,062,425, Cl. 184-105.00A.
Shaner, James Robert: *See—*
Nelson, John Raymond; Shaner, James Robert; and Holcomb, Don Reginald, 4,063,173, Cl. 325-11.000.
Shank, Joseph L., to Swift Agricultural Chemicals Corporation. Process for manufacture of isobutylidene diurea. 4,062,890, Cl. 260-553.00R.
Sharkey, Hubert J.: *See—*
Mitchell, Mark L., III; and Sharkey, Hubert J., 4,062,820, Cl. 260-18.00N.
Sheinin, Viktor Efimovich: *See—*
Mekhtiev, Soltan Dzhafarovich; Rizaev, Ramiz Gasan Kuli Ogly; Novruzova, Adilya Shir Mamed Kyzy; Magerramova, Roida Jusuf Kyzy; Suleimanov, Geibat Nagmetovich; Rafiev, Murshud Sary Ogly; Guseinov, Fikret Dzhabrail Ogly; and Sheinin, Viktor Efimovich, 4,062,885, Cl. 260-465.00C.
Shelef, Mordecai: *See—*
Gandhi, Haren S.; Shelef, Mordecai; Stepien, Henryk K.; and Yao, Hsien C., 4,062,808, Cl. 252-454.000.
Shell Oil Company: *See—*
Goudriaan, Frans; and van Klinken, Jakob, 4,062,758, Cl. 208-80.000.
Kuderna, Jerome G.; and Saliman, Paul M., 4,062,649, Cl. 23-230.00R.
Olson, Eugene E.; Clendenen, Ronald Lee; and Schlaudt, Charles McCammon, 4,062,922, Cl. 264-294.000.
Pilgram, Kurt H. G., 4,062,670, Cl. 71-88.000.
Schadenberg, Hendrik, 4,062,788, Cl. 252-54.600.
van Acker, Eduard M. A. A. J.; and Bijl, Geert J. M., 4,062,908, Cl. 260-885.000.
Sheppard, Chester Stephen: *See—*
MacLeay, Ronald Edward; and Sheppard, Chester Stephen, 4,063,012, Cl. 526-219.000.
Shibano, Hirofumi: *See—*
Nogami, Yoshio; Ooka, Isami; Hamamoto, Tetsuo; Shibano, Hirofumi; Miyao, Kenji, deceased; and Miyao, Mieko, legal heir, 4,062,931, Cl. 423-522.000.
Shields, James E., to Eli Lilly and Company. D-Ala[5]-somatostatin and intermediates thereto. 4,062,816, Cl. 260-8.000.
Shigeyasu, Motoo; and Kitamura, Takehiko, to Matsuyama Petrochemicals, Inc. Apparatus for continuous liquid-phase oxidation reaction. 4,062,654, Cl. 23-288.00A.
Shimizu, Kazuyuki: *See—*
Yoshida, Toru; Hosoi, Kameo; Yoshida, Tokuzo; Shimizu, Kazuyuki; and Nakagawa, Koithiro, 4,062,129, Cl. 34-80.000.
Shin, Chung T.: *See—*
Gary, Herbert H.; and Shin, Chung T., 4,062,938, Cl. 424-47.000.
Shiokawa, Hiroyasu. Friction press. 4,062,284, Cl. 100-289.000.
Shionogi & Co., Ltd.: *See—*
Yukinaga, Hisajiro; Sumimoto, Shinzaburo; Ishizuka, Ichiro; and Sugita, Jitsuo, 4,062,861, Cl. 260-307.00H.
Shipchandler, Mohammed T., to IMC Chemical Group, Inc. Zearalin ethers. 4,062,970, Cl. 424-279.000.
Shiraga, Ken: *See—*
Tanabe, Yasuo; Toriya, Jun; Sato, Masato; and Shiraga, Ken, 4,062,900, Cl. 260-637.00R.

Shirasaka, Masuo: *See—*
Suzuki, Yoshiro; Ohta, Hironori; and Shirasaka, Masuo, 4,062,689, Cl. 106-50.000.
Shjeflo, Jelmer B. Decoy. 4,062,141, Cl. 43-3.000.
Shlaes, Milton: *See—*
Schiffman, Jerome D.; and Kleinke, Bernard L., 4,063,046, Cl. 179-90.00K.
Shuck, Lowell Z.: *See—*
Pasini, Joseph, III; Shuck, Lowell Z.; and Overbey, William K., Jr., 4,062,404, Cl. 166-259.000.
Shughart, Mervin Leonard: *See—*
Hammond, James Woodrow; and Shughart, Mervin Leonard, 4,062,106, Cl. 29-628.000.
Sicard, Hubert, to Compagnie Maritime d'Expertises - Comex. Rapidly connectable and disconnectable pipe union. 4,062,571, Cl. 285-26.000.
Sickmen, Robert C. Adjustable length universal tuning knob for T.V. receiver. 4,062,315, Cl. 116-124.20A.
Sieber, Manfred; Fichter, Manfred; and Muller, Ingo, to Kienzle Apparate GmbH. Servo system for trip recorder. 4,063,142, Cl. 318-678.000.
Siemens Aktiengesellschaft: *See—*
Appelt, Guenter, 4,063,124, Cl. 313-60.000.
Donig, Gerhard; and Muller, Manfred, 4,063,302, Cl. 361-90.000.
Elstner, Klaus, 4,063,029, Cl. 178-17.500.
Falckenberg, Richard; and Abd el Wahid, Ali, 4,062,653, Cl. 23-273.00V.
Forstbauer, Wilhelm, 4,063,143, Cl. 363-40.000.
Grassme, Ulrich, 4,063,099, Cl. 250-413.000.
Gupta, Jutta Das; Markwitz, Wernhard; and Paetsch, Werner, 4,063,174, Cl. 325-304.000.
Kirschner, Nikolaus, 4,063,224, Cl. 365-189.000.
Kullmann, Dieter; and Intichar, Lutz, 4,063,122, Cl. 310-64.000.
Leowald, Karl-Friedrich, 4,063,145, Cl. 363-71.000.
Ludwig, Volker, 4,063,235, Cl. 340-347.0DD.
Mallon, Dietmar, 4,063,042, Cl. 179-15.0BT.
Mueller, Ruediger, 4,063,273, Cl. 357-43.000.
Vollnhals, Friedemann, 4,063,041, Cl. 179-15.0BV.
Sifniades, Stylianos; and Boyle, William J., Jr., to Allied Chemical Corporation. Resolution of α-amino-ε-caprolactam optical isomers. 4,062,839, Cl. 260-239.30R.
Signode Corporation: *See—*
Cheung, Nelson, 4,062,278, Cl. 100-4.000.
Wojcik, Edward P., 4,062,086, Cl. 24-20.0EE.
Silicon Material, Inc.: *See—*
Lawrence, John E.; and Wu, Icheng, 4,062,102, Cl. 29-572.000.
Silvestri, Anthony J.: *See—*
Chang, Clarence D.; Lang, William H.; and Silvestri, Anthony J., 4,062,905, Cl. 260-682.000.
Simac S.p.A.: *See—*
Sclippa, Ferruccio, 4,062,259, Cl. 83-285.000.
Simmonds Precision Products, Inc.: *See—*
Lamphere, David A.; and Weitz, Paul G., Jr., 4,062,223, Cl. 73-27.00R.
Simmons, Calvin J.: *See—*
Rogerson, Jerry B.; and Simmons, Calvin J., 4,062,910, Cl. 261-34.00A.
Simon, Jo: *See—*
Funck, Alfred; and Simon, Jo, 4,063,063, Cl. 219-121.0LM.
Simond, Jacques: *See—*
Mauvernay, Roland Yves; Busch, Norbert; Moleyre, Jacques; Simond, Jacques; and Monteil, Andre, 4,062,956, Cl. 424-248.570.
Simonson, Gordon Leon, to Durex Products, Inc. Elastomer screen units for shaker-screen bodies. 4,062,769, Cl. 209-399.000.
Simplex Time Recorder Co.: *See—*
Willmann, Erich; and Trischler, Gunter, 4,063,071, Cl. 235-92.00T.
Simpson Manufacturing Co., Inc.: *See—*
Gilb, Tyrell T., 4,062,167, Cl. 52-693.000.
Simrad A.S.: *See—*
Fremstedal, Sverre Oddmund; and Lier, Otto Bjorn, 4,063,296, Cl. 360-118.000.
Simtrac Inc.: *See—*
Grossman, Harold; and Mandel Sherman, 4,062,146, Cl. 47-17.000.
Singer Company, The: *See—*
Herr, John Addison; and Jaffe, Wolfgang, 4,063,123, Cl. 310-270.000.
Peets, Robert Seymour, 4,062,606, Cl. 312-237.000.
Sinha, Ashok Kumar: *See—*
Chang, Robert Pang Heng; and Sinha, Ashok Kumar, 4,062,747, Cl. 204-164.000.
Sirmay, Emil. Method of casting an assembly of articulatable components. 4,062,395, Cl. 164-9.000.
SK&F Lab Co.: *See—*
Anderson, Elvin L.; Mendelson, Wilford L.; and Wellman, George R., 4,063,023, Cl. 548-342.000.
Eibe, Werner W., 4,062,096, Cl. 29-113.0AD.
SKF Nova AB: *See—*
Nilsson, Sven Walter, 4,062,602, Cl. 308-6.00C.
Skilling, Derek, to Imperial Chemical Industries Limited. Production of tubular film. 4,062,916, Cl. 264-95.000.
Skinner, Frank R., II: *See—*
Barry, Patrick J.; and Skinner, Frank R., II, 4,062,440, Cl. 198-478.000.
Slater Electric Inc.: *See—*
Boteler, William C., 4,062,470, Cl. 220-3.300.
Slusarchyk, William A.: *See—*
Dolfini, Joseph E.; Slusarchyk, William A.; and Koster, William H., 4,062,842, Cl. 260-239.100.
Slusher, John G., to Raymond Lee Organization, Inc., The, a part interest. Articulated walking cane. 4,062,372, Cl. 135-66.000.
Smith, Anthony B. Demountable bait cutting table. 4,062,299, Cl. 108-42.000.
Smith, Arlie E.: *See—*
Vick, Edward L.; and Smith, Arlie E., 4,062,291, Cl. 104-10.000.
Smith, Burton Jordon: *See—*
Cathey, Wade Thomas; and Smith, Burton Jordon, 4,063,083, Cl. 250-199.000.
Smith, Edward D.: *See—*
Gant, Gary L.; Breeden, Michael D.; Sting, James A.; and Smith, Edward D., 4,062,336, Cl. 123-139.0AF.
Smith, Erwin George: *See—*
Miller, Samuel Jacob; and Smith, Erwin George, 4,062,282, Cl. 100-53.000.
Smith Kline & French Laboratories Limited: *See—*
Durant, Graham John; and Ganellin, Charon Robin, 4,062,967, Cl. 424-273.00R.
Ganellin, Charon Robin; and Young, Rodney Christopher, 4,062,863, Cl. 424-273.00R.
Smith, Marvin W.: *See—*
Perkins, Donald W.; and Smith, Marvin W., 4,063,306, Cl. 363-17.000.
Smith, Richard E.: *See—*
Stange, Klaus K.; Smith, Richard E.; Hamlin, Thomas J.; and Cassano, James R., 4,062,538, Cl. 271-243.000.
SmithKline Corporation: *See—*
Kaiser, Carl; and Pendleton, Robert G., 4,062,961, Cl. 424-258.000.
Snamprogetti S.p.A.: *See—*
Moggi, Pietro Antonio, 4,062,865, Cl. 260-319.100.
Pagani, Giorgio, 4,062,734, Cl. 202-236.000.
Snoke, Roy Eugene; Risley, Hugh Arthur; and Goodhue, Charles Thomas, to Eastman Kodak Company. Production of uricase from micrococcus luteus. 4,062,731, Cl. 195-62.000.
Snow, Barton H., to General Electric Company. Method and apparatus for windmill starts in gas turbine engines. 4,062,185, Cl. 60-204.000.
Snow, Barton H.; and Homan, Frank R., to General Electric Company. Apparatus for windmill starts in gas turbine engines. 4,062,186, Cl. 60-226.00R.
Snow Brand Milk Products, Co., Ltd.: *See—*
Niki, Hiroshi; Deya, Eiki; Doi, Toru; Ahiko, Kenkichi; and Hayashi, Hiromichi, 4,062,409, Cl. 426-643.000.
Snyder, Jan S.; and Bright, Clark I., to Xerox Corporation. Selective erasure of image recording devices. 4,063,222, Cl. 365-126.000.
Snyder, Richard C.; and Wold, Harold A., to Pullman Incorporated. Freight car lading tie down anchor. 4,062,297, Cl. 105-480.000.
Sochtig, Gerhard; and Heitfeld, Heinz. Automatic process for the optimum regulation of aircraft fuel flow. 4,063,072, Cl. 364-431.000.
Societa Italiana Telecomunicazioni Siemens S.p.A.: *See—*
Pipitone, Roberto; and Gnocchi, Colombo, 4,063,049, Cl. 179-110.00A.
Societe Anonyme Automobiles Citroen: *See—*
Cadiou, Jean, 4,063,136, Cl. 318-139.000.
Grosseau, Albert, 4,063,052, Cl. 200-61.460.
S.A. Etablissements Francois Salomon & Fils: *See—*
Riedel, Tilo, 4,062,553, Cl. 280-11.37A.
Riedel, Tilo, 4,062,562, Cl. 280-605.000.
Societe Anonyme Roure Bertrand Dupont: *See—*
Pesnelle, Pierre; and Teisseire, Paul Jose, 4,062,878, Cl. 260-395.000.
Societe d'Optique, Precision, Electronique et Mecanique Sopelem: *See—*
Vinches, Rene; and Moirez, Jacques, 4,062,267, Cl. 89-41.00E.
Societe Nationale Elf Aquitaine (SNEA): *See—*
Marie, Gilbert; Lang, Andre; and Chapelet, Gilbert, 4,063,010, Cl. 526-169.000.
Societe Suisse pour l'Industrie Horlogere Management Services S.A.: *See—*
Huguenin, Raymond; Matthey, Hubert; and Voumard, Martial, 4,062,154, Cl. 51-319.000.
Sofermo: *See—*
Pardo, Pierre; and Pruvot, Francois, 4,062,601, Cl. 308-2.00R.
Sohara, Masayoshi: *See—*
Hagiwara, Miyuki; Sohara, Masayoshi; Araki, Kunio; and Kagiya, Tsutomu, 4,062,998, Cl. 428-380.000.
Solheim, Karsten. Golf club swinging apparatus. 4,062,222, Cl. 73-13.000.
Sollitto, Vincent F.: *See—*
Collins, Clive A.; and Sollitto, Vincent F., 4,063,308, Cl. 364-200.000.
Solvay & Cie.: *See—*
Lolivier, Jacques; and Ryckaert, Andre, 4,062,901, Cl. 260-652.50R.
Sommer, Hans: *See—*
Manner, Erich; Adler, Klaus; Pichler, Engelbert; Bauer, Johann; and Sommer, Hans, 4,062,715, Cl. 156-334.000.
Sonnenschein, Hans; and Pohl, Felix, to Ludwig Taprogge Reinigungsanlagen fur Rohren-Warmeaustauscher. Steam condensation system. 4,062,912, Cl. 261-116.000.
Sony Corporation: *See—*
Hatanaka, Hiroshi; and Suzuki, Kiyosuki, 4,063,147, Cl. 323-22.00Z.
Hoshimi, Susumu; and Sato, Toshio, 4,063,137, Cl. 318-212.000.

Iida, Mikio, 4,063,134, Cl. 315-371.000.
Komatsubara, Michimasa; Waku, Toshihiko; Fukai, Tetsuya; and Satsuka, Akito, 4,063,201, Cl. 333-70.00R.
Machida, Tetsuo, 4,062,506, Cl. 242-199.000.
Matsushita, Takeshi; Hayashi, Hisao; Aoki, Teruaki; and Mochizuki, Hidenobu, 4,063,275, Cl. 357-54.000.
Mochizuki, Hidenobu; Aoki, Teruaki; Matsushita, Takeshi; Hayashi, Hisao; and Okayama, Masanori, 4,062,707, Cl. 148-187.000.
Ohsawa, Mitsuo, 4,063,184, Cl. 328-221.000.
Tatami, Mitsushige, 4,063,284, Cl. 358-127.000.
Yanagibori, Masami, 4,063,177, Cl. 325-460.000.
Sorensen, Erik Dankvard: *See—*
Hovmand, Svend; and Sorensen, Erik Dankvard, 4,062,641, Cl. 425-6.000.
Sorimachi, Kanehiro: *See—*
Mashimo, Yukio; Uchiyama, Takashi; and Sorimachi, Kanehiro, 4,063,257, Cl. 354-31.000.
Soshin Electric Company Limited: *See—*
Komatsubara, Michimasa; Waku, Toshihiko; Fukai, Tetsuya; and Satsuka, Akito, 4,063,201, Cl. 333-70.00R.
Soulie, Guy; and Iato, Michel, to Enterprise de Recherches et d'Activites Petrolieres (E.R.A.P.). Method and apparatus for connecting a riser pipe to blow out preventer stack at the head of an oil well. 4,062,402, Cl. 166-.600.
Sourirajan, Srinivasa: *See—*
Kunst, Branko; and Sourirajan, Srinivasa, 4,062,782, Cl. 210-500.00M.
Spanel, Abram N.; Eiland, P. Frank; and Jacobs, David R., to Spanel, Abram N. Two-pile height yarn feed for conventional tufting machine. 4,062,308, Cl. 112-79.00A.
Sparlin, Derry D., to Continental Oil Company. Pump-down sand washing tool. 4,062,403, Cl. 166-156.000.
Specht, Donald Paul: *See—*
Van Allan, James Albert; Cunningham, Michael Paul; Specht, Donald Paul; and Farid, Samir Yacoub, 4,062,686, Cl. 96-115.00R.
Spectra-Physics, Inc.: *See—*
Rando, Joseph F.; Kahn, Michael E.; Heumann, Thomas E.; and Luebbers, Scott S., 4,062,634, Cl. 356-248.000.
Spencer, George T.: *See—*
Mann, Don Cowan; and Spencer, George T., 4,063,295, Cl. 360-99.000.
Sperry, Philip R.; Setzer, William C.; and Damon, Lloyd E., to Swiss Aluminium Ltd. Aluminum alloys possessing improved resistance weldability. 4,062,704, Cl. 148-32.000.
Sperry Rand Corporation: *See—*
Brown, Ralph Auldon; and Meinelt, Kenneth Harold, 4,062,247, Cl. 74-89.000.
De Coene, Frans J. G. C., 4,062,366, Cl. 130-27.00F.
Greenig, Nelson L., 4,062,321, Cl. 118-623.000.
Grube, Lowell R.; and Campbell, Willis R., 4,062,279, Cl. 100-5.000.
Isbister, Eric J.; Klepach, Robert J.; Riggs, Robert F.; and Tucker, Terry A., 4,063,240, Cl. 343-9.000.
Kritz, Jacob A., 4,063,214, Cl. 340-8.00L.
Levine, Seymour, 4,063,141, Cl. 318-648.000.
Perahia, Avraham, 4,063,293, Cl. 360-62.000.
Rice, Robert L.; and Mast, Aquila D., 4,062,172, Cl. 56-343.000.
Sperry Rand Limited: *See—*
Marshall, John Stephen; and Dodd, John Frederick, 4,062,374, Cl. 137-115.000.
Spevack, Jerome S., to Deuterium Corporation. Contact apparatus for multiphase processing. 4,062,663, Cl. 55-238.000.
Spicer, Larry Dean; Pensack, Joseph Michael; Wilbur, Robert Daniel; and Demkovich, Gary Michael, to American Cyanamid Co. Ureidotetralin compounds. 4,062,856, Cl. 260-295.50B.
Spiegelberg, Bernard N., to Gould Inc. Molded plastic battery container. 4,063,007, Cl. 429-176.000.
Spielman, Lyle S., to Eclipse, Inc. Tube firing burner. 4,062,343, Cl. 126-91.00A.
Sponaes, John R.; and Kutsch, Wilhelm P., to Graphic Magicians, Inc. Transfer ink and method of using same. 4,062,644, Cl. 8-2.50A.
Sprecker, Mark A.; Vock, Manfred Hugo; Schmitt, Frederick Louis; Hall, John B.; and Sanders, James Milton, to International Flavors & Fragrances Inc. Derivatives of 1-acetyl-3,3-dimethylcyclohexane. 4,062,894, Cl. 260-586.00R.
Srinivasan, Vadake R.; Fleenor, Marvin B.; Summers, Richard J.; and Bumm, Margaret W., to Louisiana State University Foundation. Process for manufacturing high density cell cultures. 4,062,727, Cl. 195-28.00R.
Stadler, Eberhard: *See—*
Berg, Christoph; and Stadler, Eberhard, 4,062,416, Cl. 177-210.0EM.
Stahl, Allen Andrew, to Chanin, Alvin M.; Chanin, Robert; and Mooney, Robert J. Key cutting apparatus. 4,062,261, Cl. 83-414.000.
Stahmann, Mark A. Coagulation of protein from the juices of green plants by fermentation and the preservation thereof. 4,062,276, Cl. 99-467.000.
Stamicarbon, B.V.: *See—*
denOtter, Marinus J. A. M.; and van Geenen, Albert A., 4,063,020, Cl. 544-221.000.
De Rooij, Abraham H.; Prop, Jozef M. G.; and Wassen, Willem J., 4,062,927, Cl. 423-387.000.
Stamper, David John: *See—*
Thompson, William Henry; Worthington, Ralph Eric; and Stamper, David John, 4,062,929, Cl. 423-483.000.
Standard Oil Company (Indiana): *See—*
Bertolacini, Ralph J.; and Koca, Robert M., 4,062,802, Cl. 252-435.000.
Sciaraffa, Michael A.; and Cermak, Gregory S., 4,062,874, Cl. 260-346.760.
Stram, Edward M., 4,062,313, Cl. 114-265.000.
Standard Products Corporation: *See—*
Gundlach, Robert W.; and Hudson, Frederick W., 4,063,051, Cl. 200-61.130.
Stange, Klaus K.; Smith, Richard E.; Hamlin, Thomas J.; and Cassano, James R., to Xerox Corporation. Speed regulated fluidic sheet transport. 4,062,538, Cl. 271-243.000.
Stapleton, Thomas T.; and Rober, Herbert E., to General Motors Corporation. O-ring inspection method and apparatus. 4,062,633, Cl. 356-159.000.
Stark, Olof Sven Soren, to AB Ziristor. Method for making a packing laminate. 4,062,712, Cl. 156-244.000.
Stauffer Chemical Company: *See—*
Baker, Don R.; and Walker, Francis H., 4,062,977, Cl. 424-324.000.
Fancher, Llewellyn W.; and Freiberg, Ashley H., 4,062,892, Cl. 260-564.00E.
Tilles, Harry, 4,062,971, Cl. 424-298.000.
Stedman, Robert N., to Caterpillar Tractor Co. Cab, pinned on for double articulated tractor. 4,062,420, Cl. 180-89.100.
Steele, Kenneth L.: *See—*
Peter, Jakob; Thatcher, Perry D.; and Steele, Kenneth L., 4,062,532, Cl. 271-6.000.
Steensma, Peter Dennis, to International Telephone and Telegraph Corporation. Secure optical multiplex communication system. 4,062,618, Cl. 350-3.500.
Steiger, Douglass W., to Toreq, Inc. Scraper vehicle. 4,062,136, Cl. 37-126.0AE.
Steinetz, Bernard George, Jr., to Ciba-Geigy Corporation. Antifertility-combinations. 4,062,964, Cl. 424-267.000.
Steinhogl, John. Produce cutter. 4,062,260, Cl. 83-404.300.
Stephan, Edward R., to United States of America, Treasury. Light responsive monitoring system. 4,063,044, Cl. 179-81.00C.
Stephens, Dennis L., to Teletype Corporation. Direct current power converter with start-up and protection circuits. 4,063,307, Cl. 363-21.000.
Stephens, John A.; and Kibler, Ralph J., to United States of America, Army. Integrated helicopter flight control. 4,062,508, Cl. 244-83.00F.
Stepien, Henryk K.: *See—*
Gandhi, Haren S.; Shelef, Mordecai; Stepien, Henryk K.; and Yao, Hsien C., 4,062,808, Cl. 252-454.000.
Sterling Drug Inc.: *See—*
Mooradian, Aram, 4,062,864, Cl. 260-315.000.
Potts, Gordon Oliver, 4,062,954, Cl. 424-241.000.
Stern, Robert G.; and Mitchell, Larry D., to Affiliated Hospital Products, Inc. Bed arrangement. 4,062,075, Cl. 5-63.000.
Stevens, Geoffrey Charles: *See—*
Hargrove, John David; and Stevens, Geoffrey Charles, 4,062,811, Cl. 252-462.000.
Stevens, H. T.: *See—*
Barnes, Arthur K.; and Stevens, H. T., 4,062,296, Cl. 105-163.00R.
Stevens, Philip Clyde: *See—*
Bhaumik, Mani Lal; Bradford, Robert Spencer, Jr.; Ault, Earl Rema; and Stevens, Philip Clyde, 4,063,192, Cl. 331-94.50G.
Stewart, Roger Green, to RCA Corporation. Memory cell and array. 4,063,225, Cl. 365-156.000.
Stilwell, George Raymond, Jr.: *See—*
Schlig, Eugene Stewart; and Stilwell, George Raymond, Jr., 4,063,223, Cl. 365-116.000.
Sting, James A.: *See—*
Gant, Gary L.; Breeden, Michael D.; Sting, James A.; and Smith, Edward D., 4,062,336, Cl. 123-139.0AF.
Stivender, Paul M.; Lang, George R.; and Mentink, Raymond C., to General Electric Company. X-ray shielding device. 4,062,518, Cl. 250-519.000.
Stoker, John F. Crop interseeding implement. 4,062,305, Cl. 111-1.000.
Stolar, Morris E., to Abic Ltd. Water-soluble composition comprising sulfadimidine and pyrimethamine. 4,062,940, Cl. 424-80.000.
Stolen, Rogers Hall: *See—*
Ashkin, Arthur; Jain, Ravinder Kumar; Lin, Chinlon; and Stolen, Rogers Hall, 4,063,106, Cl. 307-88.300.
Storm, Thomas D.; and Nirschl, Joseph P., to Procter & Gamble Company, The. Clay-containing fabric softening detergent compositions. 4,062,647, Cl. 8-137.000.
Storms, Phillip W.: *See—*
Farrar, Grover L.; and Storms, Phillip W., 4,062,972, Cl. 424-308.000.
Story, James L.: *See—*
Taylor, H. Lyndon; Rylander, H. Grady; and Story, James L., 4,062,354, Cl. 128-2.00R.
Storz, Edwin L. Automatic wire feeder. 4,062,095, Cl. 29-802.000.
Stout, Gerald Louret: *See—*
Appelman, Dudley Ralph; Link, David Allen; and Stout, Gerald Louret, 4,063,035, Cl. 179-1.0SP.
Stram, Edward M., to Standard Oil Company (Indiana). Installation of vertically moored platforms. 4,062,313, Cl. 114-265.000.
Strauss, Richard; and Kimball, Philip C., to Whatman Reeve Angel Limited. Disposable filter with interchangeable end elements. 4,062,781, Cl. 210-446.000.
Strayer Coin Bag Company, Inc.: *See—*
Bonner, Cletus D., 4,062,207, Cl. 70-68.000.
Strayer, Larry G. Computer system to prevent collision between mov-

ing objects such as aircraft moving from one sector to another. 4,063,073, Cl. 364-439.000.
Streifer, William: *See—*
Scifres, Donald R.; Burnham, Robert D.; and Streifer, William, 4,063,189, Cl. 331-94.50H.
Stricharczuk, Paul Thomas; and Lawson, Dennis Lee, to B. F. Goodrich Company, The. Stereo reticulated polymeric lace-like structure and process for making the same. 4,062,915, Cl. 264-50.000.
Strike, Donald P., to American Home Products Corporation. 15-Ethynyl substituted prostanoic acids. 4,062,783, Cl. 260-514.00D.
Strohalm, Jiri: *See—*
Kopecek, Jinrich; Ulbrich, Karel; Vacik, Jiri; Strohalm, Jiri; Chytry, Vladimir; Drobnik, Jaroslav; and Kalal, Jaroslav, 4,062,831, Cl. 260-47.0UA.
Studiengesellschaft Kohle m.b.H.: *See—*
Ziegler, Karl, deceased; Breil, Heinz; Holzkamp, Erhard; and Martin, Heinz, 4,063,009, Cl. 526-159.000.
Stutzke, Paul: *See—*
Ohorodnik, Alexander; Lohmar, Elmar; Gehrmann, Klaus; and Stutzke, Paul, 4,062,888, Cl. 260-545.00P.
Suau, Jean A.; and Rau, Rama A., to Schlumberger Technology Corporation. Microwave apparatus and method for determination of adsorbed fluid in subsurface formations surrounding a borehole. 4,063,151, Cl. 324-6.000.
Sublett, Bobby J., to Eastman Kodak Company. Polyester hot melt adhesive. 4,062,907, Cl. 260-860.000.
Sublett, Kenneth L., to Western Marine Electronics, Inc. Side scan sonar system. 4,063,212, Cl. 340-3.00F.
Subramanian, Kohur Nagaraja: *See—*
Glaum, Gerald Vernon; O'Neill, Charles Edward; and Subramanian, Kohur Nagaraja, 4,062,924, Cl. 423-150.000.
Suggs, Laurine Scylester. Home fire extinguishing system. 4,062,493, Cl. 239-197.000.
Sugita, Jitsuo: *See—*
Yukinaga, Hisajiro; Sumimoto, Shinzaburo; Ishizuka, Ichiro; and Sugita, Jitsuo, 4,062,861, Cl. 260-307.00H.
Sugiyama, Takahiro, to Asahi Kogaku Kogyo Kabushiki Kaisha. Small size retrofocus wide angle photographic lens. 4,062,622, Cl. 350-214.000.
Sukegawa, Tokuzo: *See—*
Hara, Katsuo; Hagino, Minoru; and Sukegawa, Tokuzo, 4,063,269, Cl. 357-30.000.
Hara, Katsuo; Hagino, Minoru; and Sukegawa, Tokuzo, 4,063,276, Cl. 357-30.000.
Suleimanov, Geibat Nagmetovich: *See—*
Mekhtiev, Soltan Dzhafarovich; Rizaev, Ramiz Gasan Kuli Ogly; Novruzova, Adilya Shir Mamed Kyzy; Magerramova, Roida Jusuf Kyzy; Suleimanov, Geibat Nagmetovich; Rafiev, Murshud Sary Ogly; Guseinov, Fikret Dzhabrail Ogly; and Sheinin, Viktor Efimovich, 4,062,885, Cl. 260-465.00C.
Sumi, Masahiko, to Tokyo Shibaura Electric Co., Ltd. Electron beam exposure apparatus. 4,063,103, Cl. 250-492.00A.
Sumimoto, Shinzaburo: *See—*
Yukinaga, Hisajiro; Sumimoto, Shinzaburo; Ishizuka, Ichiro; and Sugita, Jitsuo, 4,062,861, Cl. 260-307.00H.
Sumitomo Chemical Company, Limited: *See—*
Fujimoto, Keimei; Ohno, Nobuo; Okuno, Yoshitoshi; Mizutani, Toshio; Ohno, Isao; Hirano, Masachika; Itaya, Nobushige; and Matsuo, Takashi, 4,062,968, Cl. 424-275.000.
Summers, Richard J.: *See—*
Srinivasan, Vadake R.; Fleenor, Marvin B.; Summers, Richard J.; and Bumm, Margaret W., 4,062,727, Cl. 195-28.00R.
Sumrell, Gene: *See—*
Mod, Robert R.; Harris, James A.; Arthur, Jett C., Jr.; Magne, Frank C.; Sumrell, Gene; and Novak, Arthur F., 4,062,841, Cl. 260-239.0BF.
Sunds Aktiebolag: *See—*
Hjalmarson, Sven Ingemar, 4,062,151, Cl. 51-34.00D.
Sundstrand Corporation: *See—*
Hucker, David J.; and Schmitz, Norbert L., 4,063,144, Cl. 363-43.00A.
Sunnen Products Company: *See—*
Rutter, Harold T., 4,062,122, Cl. 33-169.00R.
Sunwa Sharyo Manufacturing Company Limited: *See—*
Misawa, Rintaro, 4,062,418, Cl. 180-8.00A.
Superior Oil Company, The: *See—*
Knight, John H., 4,062,926, Cl. 423-244.000.
Surface Technology Corporation: *See—*
Rausch, John J.; and Van Thyne, Ray J., 4,062,484, Cl. 226-196.000.
Sutphin, Eldon Marvin, Jr., to RCA Corporation. Testing compression in engines from starter motor current waveform. 4,062,232, Cl. 73-117.200.
Suzuki, Akiyoshi; and Totsuka, Maso, to Canon Kabushiki Kaisha. Device for observing an object. 4,062,623, Cl. 350-91.000.
Suzuki, Kazuo, to Tokyo Shibaura Electric Co., Ltd. Nitrogen oxide reducing catalyst. 4,062,807, Cl. 252-443.000.
Suzuki, Kiyosuki: *See—*
Hatanaka, Hiroshi; and Suzuki, Kiyosuki, 4,063,147, Cl. 323-22.00Z.
Suzuki, Masayoshi: *See—*
Okuhara, Shinzi; Hosokawa, Yoshikazu; Kamei, Tatsuya; and Suzuki, Masayoshi, 4,063,115, Cl. 307-252.00G.
Suzuki, Takeshi: *See—*
Hatanaka, Kyohei; Inoue, Hajime; Hisatomi, Haruya; Okuda, Koya; Suzuki, Takeshi; Murao, Mikio; and Utiyama, Susumu, 4,062,667, Cl. 65-135.000.
Suzuki, Yoshihisa: *See—*
Kato, Takashi; Yoshizawa, Toshio; Suzuki, Yoshihisa; and Ueda, Shozo, 4,062,439, Cl. 198-470.000.
Suzuki, Yoshiro; Ohta, Hironori; and Shirasaka, Masuo, to Asahi Glass Company Ltd. Glass composition which is resistant to alkali. 4,062,689, Cl. 106-50.000.
Swanson, Bernard A. Anti pollution insert. 4,062,342, Cl. 126-59.500.
Swift Agricultural Chemicals Corporation: *See—*
Shank, Joseph L., 4,062,890, Cl. 260-553.00R.
Swim 'n Play, Inc.: *See—*
Kaufmann, Herbert O.; and Schaeffer, John I., 4,062,158, Cl. 52-71.000.
Swiss Aluminium Ltd.: *See—*
Baur, Rudolf, 4,062,784, Cl. 252-49.500.
Sperry, Philip R.; Setzer, William C.; and Damon, Lloyd E., 4,062,704, Cl. 148-32.000.
Syeles, Albert M.: *See—*
Anderson, Wallace E.; Krall, Albert D.; Syeles, Albert M.; and Vansant, Oscar J., 4,063,243, Cl. 343-100.0SA.
Symborski, Alex P.: *See—*
Eisenberg, Arnold J.; Klink, Jerome P.; Symborski, Alex P.; and White, Gerald L., 4,062,501, Cl. 242-18.00G.
Szabo, Bela G., to Bruce Plastics, Inc. Non-return valve assemblies in injection molding machines. 4,062,479, Cl. 222-495.000.
Szabo, Francis S., to Addressograph-Multigraph Corporation. Photocomposition machine font source. 4,063,256, Cl. 354-13.000.
Szalony, Norman. Integrally formed ball carrier. 4,062,482, Cl. 224-5.00D.
Szekeres, Laszlo: *See—*
Harsanyi, Kalman; Takacs, Kalman; Kiss, Pal; Szekeres, Laszlo; Papp, Gyula; and Benedek, Eva, 4,062,850, Cl. 260-286.00R.
Szepaniak, Pertti Leo Juhani. Mobile wood chipper unit. 4,062,498, Cl. 241-101.700.
Szkaradek, Edward J., to Morehouse Industries, Inc. Shaft guard. 4,062,599, Cl. 308-1.00A.
Szulc, Zenon: *See—*
Zawadzki, Bohdan; Bulinska, Anna; Szulc, Zenon; Lonski, Ryszard; and Brzoskowski, Zbigniew, 4,062,930, Cl. 423-483.000.
Tabor, Abby F.: *See—*
Tabor, Martin A.; Tabor, Abby F.; and Laing, Clyde A., 4,062,429, Cl. 190-18.00A.
Tabor, Martin A.; Tabor, Abby F.; and Laing, Clyde A. Combined garment bag and carrier. 4,062,429, Cl. 190-18.00A.
Tadanier, John Soloman: *See—*
Hallas, Robert; Martin, Jerry Roy; and Tadanier, John Soloman, 4,063,014, Cl. 536-9.000.
Taisei Denski Kabushiki Kaisha: *See—*
Yasujima, Nobuo; Itokawa, Natsuo; and Arai, Juichiro, 4,063,211, Cl. 338-308.000.
Takacs, Kalman: *See—*
Harsanyi, Kalman; Takacs, Kalman; Kiss, Pal; Szekeres, Laszlo; Papp, Gyula; and Benedek, Eva, 4,062,850, Cl. 260-286.00R.
Takada, Shingo; and Iwata, Ichiro, to Doryokuro Kakunenryo Kaihatsu Jigyodan. Process and apparatus for continuous preparation of uranium tetrafluoride. 4,062,923, Cl. 423-11.000.
Takahara, Ichiro; Yabu, Tadahiko; and Hujita, Jihei, to Sanyo Electric Co., Ltd. Video disc player. 4,063,286, Cl. 358-128.000.
Takahashi, Kozo: *See—*
Murakami, Masuo; Takahashi, Kozo; Murase, Kiyoshi; Mase, Toshiyasu; Ida, Hisashi; and Takenaka, Toichi, 4,063,025, Cl. 560-29.000.
Takahashi, Yasuyuki: *See—*
Tetsuka, Iwao; Kato, Kusuo; Takahashi, Yasuyuki; and Sano, Tomoharu, 4,062,539, Cl. 172-9.000.
Takahata, Tomihisa: *See—*
Fujino, Yoshiharu; Chiba, Iwane; Chiyonobu, Toshimi; Takahata, Tomihisa; and Kachi, Yasuhiko, 4,063,061, Cl. 219-101.000.
Takai, Kiyoshi, to Osaka Iron & Steel Co., Ltd. Ferruginous slag oxidizing apparatus. 4,062,531, Cl. 266-226.000.
Takasago Thermal Engineering Co., Ltd.: *See—*
Yoshida, Toru; Hosoi, Kameo; Yoshida, Tokuzo; Shimizu, Kazuyuki; and Nakagawa, Koithiro, 4,062,129, Cl. 34-80.000.
Takasawa, Yoshio: *See—*
Yoshimoto, Takeo; Igarashi, Keiichi; Harayama, Takeo; Ura, Masaaki; Toyama, Teruhiko; Morikawa, Osamu; Takasawa, Yoshio; and Hojo, Yoshikata, 4,062,896, Cl. 260-613.00R.
Takasu, Syuhei: *See—*
Masuda, Masami; and Takasu, Syuhei, 4,062,150, Cl. 51-5.00D.
Takeda, Keiji; Matsumoto, Kenji; Tamura, Hiroshi; and Nagata, Masayoshi, to Fuji Photo Film Co., Ltd. Non-silver halide light-sensitive material sensitized by colloidal elements. 4,062,685, Cl. 96-88.000.
Takenaka, Toichi: *See—*
Murakami, Masuo; Takahashi, Kozo; Murase, Kiyoshi; Mase, Toshiyasu; Ida, Hisashi; and Takenaka, Toichi, 4,063,025, Cl. 560-29.000.
Takeoka, Yoshihiko: *See—*
Hayami, Satohiro; Furukawa, Takashi; and Takeoka, Yoshihiko, 4,062,700, Cl. 148-12.300.
Tamada, Terumi: *See—*
Fujimoto, Yasuo; and Tamada, Terumi, 4,062,862, Cl. 260-307.00C.
Tamada, Yuzuru; and Yoshimura, Susumu, to Fujii Denko Company, Limited. Safety hook. 4,062,092, Cl. 24-241.0SB.
Tamai, Tasuo; Osawa, Sadao; Miyatuka, Hajime; and Yamamoto, Masaya, to Fuji Photo Film Co., Ltd. Liquid developer for electrophotography. 4,062,789, Cl. 252-62.10L.

Tamai, Yasuo: *See—*
Aonuma, Masashi; Ogawa, Hiroshi; and Tamai, Yasuo, 4,063,000, Cl. 428-403.000.
Tamao, Yoshikuni: *See—*
Okamoto, Shosuke; Kikumoto, Ryoji; Ohkubo, Kazuo; Tonomura, Shinji; and Tamao, Yoshikuni, 4,062,963, Cl. 424-267.000.
Tamulis, John Carl: *See—*
Jensen, Donald Frederick; Tamulis, John Carl; Tomasky, Thomas; and Zable, Jack Louis, 4,063,252, Cl. 346-75.000.
Tamura, Hiroshi: *See—*
Takeda, Keiji; Matsumoto, Kenji; Tamura, Hiroshi; and Nagata, Masayoshi, 4,062,685, Cl. 96-88.000.
Tanabe, Yasuo; Toriya, Jun; Sato, Masato; and Shiraga, Ken, to Mitsubishi Chemical Industries Limited. Process for preparing butanediol and/or butenediol. 4,062,900, Cl. 260-637.00R.
Tanaka, Akio, to Zenith Radio Corporation. Memory tuning system with different speeds in program and operate modes. 4,063,178, Cl. 325-464.000.
Tandy Brands, Inc.: *See—*
Clark, Earl J., 4,062,481, Cl. 224-2.00B.
Tanifuji, Shinya: *See—*
Morooka, Yasuo; and Tanifuji, Shinya, 4,063,076, Cl. 364-472.000.
Tarui, Tadaaki: *See—*
Amemiya, Hiroshi; Tarui, Tadaaki; and Yoneyama, Tsuneo, 4,063,236, Cl. 340-347.0NT.
Tashiro, Joji; Kawanabe, Tadahiko; Araki, Noboru; Ashihara, Kazuo; Ando, Toshio; Hiragi, Sadayuki; Itoh, Kazuo; Ozawa, Yukio; Odera, Eiichi; and Inoue, Kosuke, to Nippon Telegraph and Telephone Public Corporation; Oki Electric Industry Co., Ltd.; Nippon Electric Company, Limited; Hitachi, Ltd.; and Fujitsu Limited. Intraoffice alternate connection arrangement. 4,063,043, Cl. 179-18.0EA.
Tashiro, Mikio: *See—*
Kondo, Takamitsu; and Tashiro, Mikio, 4,062,999, Cl. 428-391.000.
Tashiro, Norio: *See—*
Miura, Hiroshi; and Tashiro, Norio, 4,063,129, Cl. 315-39.710.
Tatami, Mitsushige, to Sony Corporation. Time base corrector. 4,063,284, Cl. 358-127.000.
Taube, Frank; and Lawson, Lawrence, to Dominion Tool & Die Co., Inc. Fluid measuring and metering system. 4,062,220, Cl. 73-3.000.
Taube, Frank, to Dominion Tool & Die Co., Inc. Liquid dispensing system. 4,062,472, Cl. 222-1.000.
Taylor, H. Lyndon; Rylander, H. Grady; and Story, James L. Intracranial pressure transducer system. 4,062,354, Cl. 128-2.00R.
Taylor, John Albert, Jr.: *See—*
Gilding, Denis Keith; and Taylor, John Albert, Jr., 4,062,834, Cl. 260-77.5AA.
Taylor, Ronald D., to Raymond Lee Organization, Inc., The, a part interest. Automobile trunk attachable brace. 4,062,583, Cl. 296-76.000.
Taylor, Ted J.: *See—*
Leonard, Ralph R.; and Taylor, Ted J., 4,062,203, Cl. 64-29.000.
Technicon Instruments Corporation: *See—*
Masson, Pierre Lucien; and Heremans, Joseph Felix, 4,062,935, Cl. 424-12.000.
Teepak, Inc.: *See—*
Bridgeford, Douglas J., 4,062,981, Cl. 426-278.000.
Wilson, John R.; and Burke, Noel I., 4,062,980, Cl. 426-278.000.
Teh-Sheng, Wu. Automatic tooth-paste-supplying tooth brush. 4,062,635, Cl. 401-175.000.
Teijin Limited: *See—*
Kondo, Takamitsu; and Tashiro, Mikio, 4,062,999, Cl. 428-391.000.
Teikoku Piston Ring Co., Ltd.: *See—*
Harayama, Akira, 4,062,741, Cl. 204-51.000.
Teisseire, Paul Jose: *See—*
Pesnelle, Pierre; and Teisseire, Paul Jose, 4,062,878, Cl. 260-395.000.
Tektronix, Inc.: *See—*
Veenendaal, Cornelis Teunis, 4,063,289, Cl. 358-242.000.
Telecommunications Radioelectriques et Telephoniques T.R.T.: *See—*
Pirolli, Claude, 4,062,620, Cl. 350-96.00C.
Teleflex Incorporated: *See—*
Parsons, William H., 4,062,251, Cl. 74-501.00R.
Telefonaktiebolaget L M Ericsson: *See—*
Carlsson, Jan-Olov; Johansson, Ernst Elof Ake; and Pahlen, Lars Christer, 4,062,611, Cl. 339-17.00M.
Teletype Corporation: *See—*
Stephens, Dennis L., 4,063,307, Cl. 363-21.000.
Teradyne, Inc.: *See—*
Johnson, Lennart B., 4,062,617, Cl. 339-75.00M.
Terasawa, Yoshio: *See—*
Kimura, Shin; and Terasawa, Yoshio, 4,063,270, Cl. 357-38.000.
Terra-Tex Corporation: *See—*
Gidge, Lester, 4,062,145, Cl. 47-9.000.
Terradex Corporation: *See—*
Fleischer, Robert L., 4,063,087, Cl. 250-253.000.
Terzian, Rouben T.: *See—*
Brand, Derek A.; Terzian, Rouben T.; and Montague, Douglas P., 4,062,476, Cl. 222-131.000.
Tetsuka, Iwao; Kato, Kusuo; Takahashi, Yasuyuki; and Sano, Tomoharu, to Kabushiki Kaisha Komatsu Seisakusho. Automatic control systems for rippers for use in civil works. 4,062,539, Cl. 172-9.000.
Texaco Inc.: *See—*
Castagnos, Leonce F., Jr.; and Pratt, Roy E., 4,062,759, Cl. 208-113.000.
Itria, Oswald A.; and Todd, James D., 4,063,213, Cl. 340-7.0PC.
Texas Instruments Incorporated: *See—*
Bean, Kenneth E.; and Lloyd, William W., 4,063,271, Cl. 357-49.000.
Mann, Don Cowan; and Spencer, George T., 4,063,295, Cl. 360-99.000.
Wagers, Robert S.; and Hartmann, Clinton S., 4,063,198, Cl. 333-30.00R.
Texscan Corporation: *See—*
Malcolm, Bruce G., 4,062,609, Cl. 339-8.0RL.
Textron Inc.: *See—*
DeCaro, Charles J., 4,062,388, Cl. 144-32.00R.
Th. Goldschmidt AG: *See—*
Holtschmidt, Ulrich; and Schwarzmann, Gunter, 4,062,965, Cl. 424-273.00R.
Thacker, Charles P.: *See—*
Metcalfe, Robert M.; Boggs, David R.; Thacker, Charles P.; and Lampson, Butler W., 4,063,220, Cl. 340-147.0LP.
Thalmeier, Josef: *See—*
Griesshammer, Rudolf; Koppl, Franz; Goppinger, Alois; Hamster, Helmut; and Thalmeier, Josef, 4,062,714, Cl. 156-304.000.
Thatcher, Perry D.: *See—*
Peter, Jakob; Thatcher, Perry D.; and Steele, Kenneth L., 4,062,532, Cl. 271-6.000.
Therond, Jean-Paul: *See—*
Lefebvre, Claude; and Therond, Jean-Paul, 4,063,181, Cl. 328-147.000.
Thomas & Betts Corporation: *See—*
Navarro, John N., 4,062,615, Cl. 339-98.000.
Thomas, Camille C.: *See—*
Thomas, Robert R.; and Thomas, Camille C., 4,063,266, Cl. 354-295.000.
Thomas, Robert R.; and Thomas, Camille C. Adjustable polarized filters for cameras. 4,063,266, Cl. 354-295.000.
Thompson, William Henry; Worthington, Ralph Eric; and Stamper, David John, to Fitzwilton Limited. Production of hydrogen fluoride. 4,062,929, Cl. 423-483.000.
Thomson-CSF: *See—*
Besson, Yves, 4,063,182, Cl. 328-151.000.
Hammer, Alfred Paul, 4,062,624, Cl. 350-96.00C.
Thornton, Leonard, to Molins Limited. Liquid-applicator nozzles. 4,062,492, Cl. 239-125.000.
Thorson, Robert D.: *See—*
Johnson, David G.; and Thorson, Robert D., 4,063,068, Cl. 219-441.000.
Threshold Technology, Inc.: *See—*
Grunza, Gene, 4,063,031, Cl. 179-1.00P.
Thyssen Purofer GmbH: *See—*
Altenhoner, Klaus; Jansen, Walter; Knop, Klaus; and Reering, Jan G., 4,062,529, Cl. 266-156.000.
Tickel, Herman Edward, Jr.: *See—*
Miller, Harry C.; and Tickel, Herman Edward, Jr., 4,062,211, Cl. 70-366.000.
Tilles, Harry, to Stauffer Chemical Company. S-alkyl carbonimidothioates and their use as aphicides. 4,062,971, Cl. 424-298.000.
Tilly, Guy; Hardouin, Michel Jean-Charles; and Lautrou, Jean, to Laboratoires Andre Guerbet. X-ray contrast media. 4,062,934, Cl. 424-5.000.
Tilton, Robert L., to PPG Industries, Inc. Composite threshold assembly for a molten glass delivery apparatus and method of delivery. 4,062,666, Cl. 65-99.00A.
Tinney, Francis John, to Parke, Davis & Company. Pentapeptides and methods for their production. 4,062,835, Cl. 260-112.5LH.
Toa Nenryo Kogyo Kabushiki Kaisha: *See—*
Ueno, Hiroshi; Inaba, Naomi; Makishima, Tokuo; and Wada, Shozo, 4,062,804, Cl. 252-429.00B.
Toda, Tadahide; and Konomi, Toshiaki, to Toyota Jidosha Kogyo Kabushiki Kaisha. Fuel system of internal combustion engine. 4,062,334, Cl. 123-122.0AB.
Todd, James D.: *See—*
Itria, Oswald A.; and Todd, James D., 4,063,213, Cl. 340-7.0PC.
Togulev, Alexandr Konstantinovich: *See—*
Basov, Nikolai Gennadievich; Berezhnoi, Igor Alexandrovich; Vekshin, Vyacheslav Sergeevich; Danilychev, Vladimir Alexandrovich; Elatontsev, Albert Ivanovich; Ignatiev, Vladimir Vasilievich; Karyshev, Vitaly Dmitrievich; and Togulev, Alexandr Konstantinovich, 4,063,218, Cl. 340-26.000.
Tokyo Denki Kagaku Kogyo Kabushiki Kaisha: *See—*
Masuzima, Sho; Yoshida, Shuhei; Yaguchi, Toshiyuki; and Fuchiguchi, Tetsuya, 4,062,719, Cl. 156-502.000.
Tokyo Shibaura Electric Co., Ltd.: *See—*
Amemiya, Hiroshi; Tarui, Tadaaki; and Yoneyama, Tsuneo, 4,063,236, Cl. 340-347.0NT.
Idei, Gijun, 4,063,120, Cl. 307-297.000.
Miura, Hiroshi; and Tashiro, Norio, 4,063,129, Cl. 315-39.710.
Sumi, Masahiko, 4,063,103, Cl. 250-492.00A.
Suzuki, Kazuo, 4,062,807, Cl. 252-443.000.
Yamagishi, Haruo, 4,062,103, Cl. 29-580.000.
Tomasino, Charles: *See—*
Hill, Thomas B.; and Tomasino, Charles, 4,062,917, Cl. 264-102.000.
Tomasky, Thomas: *See—*
Jensen, Donald Frederick; Tamulis, John Carl; Tomasky, Thomas; and Zable, Jack Louis, 4,063,252, Cl. 346-75.000.
Tonomura, Shinji: *See—*
Okamoto, Shosuke; Kikumoto, Ryoji; Ohkubo, Kazuo; Tonomura, Shinji; and Tamao, Yoshikuni, 4,062,963, Cl. 424-267.000.

Topchiashvili, Mikhail Izmailovich: *See—*
Andrianov, Kuzma Andrianovich; Topchiashvili, Mikhail Izmailovich; Khananashvili, Lotary Mikhailovich; Danilov, Alexei Vladimirovich; Ryabtsev, Evgeny Ivanovich; Pagava, Dali Georgievna; Bodzhgua, Dzhimsher Shalvovich; Grigoriev, Veniamin Demyanovich; and Fridland, Vladimir Mikhailovich, 4,062,813, Cl. 252-511.000.
Toray Industries, Inc.: *See—*
Kojima, Teiryo; and Kitazawa, Shin-ichi, 4,062,177, Cl. 57-140.0BY.
Toreq, Inc.: *See—*
Steiger, Douglass W., 4,062,136, Cl. 37-126.0AE.
Torfason, Louis E.: *See—*
Wood, George A.; and Torfason, Louis E., 4,062,130, Cl. 35-13.000.
Toriya, Jun: *See—*
Tanabe, Yasuo; Toriya, Jun; Sato, Masato; and Shiraga, Ken, 4,062,900, Cl. 260-637.00R.
Tornetta, Lawrence A.; Hettel, Harry J.; Hamilton, Earle; and Earl, David R. Insulated lightning arrester support with remote grounding control. 4,063,298, Cl. 361-40.000.
Torrington Company, The: *See—*
Juhas, Joseph Aloysius, 4,062,701, Cl. 148-12.100.
Toth, Jozsef, to Energiagazdalkodasi Intezet. Steam cooling system for internal combustion engines. 4,062,338, Cl. 123-25.00C.
Totsuka, Maso: *See—*
Suzuki, Akiyoshi; and Totsuka, Maso, 4,062,623, Cl. 350-91.000.
Townsend, Dana Roberts: *See—*
Faure, Louis Henry; Johnston, Howard Thomas, Jr.; and Townsend, Dana Roberts, 4,063,172, Cl. 324-158.00P.
Toyama, Teruhiko: *See—*
Yoshimoto, Takeo; Igarashi, Keiichi; Harayama, Takeo; Ura, Masaaki; Toyama, Teruhiko; Morikawa, Osamu; Takasawa, Yoshio; and Hojo, Yoshikata, 4,062,896, Cl. 260-613.00R.
Toyo Seikan Kaisha Limited: *See—*
Hotta, Hisashi; and Mori, Fumio, 4,062,997, Cl. 428-378.000.
Toyoshima, Sakae, to West Electric Company, Ltd. Camera with an internally arranged electronic flash device. 4,063,260, Cl. 354-149.000.
Toyota Jidosha Kogyo Kabushiki Kaisha: *See—*
Kadota, Masahiro, 4,062,419, Cl. 180-70.00R.
Sakurai, Kaoru; Murakami, Harunori; Nakamura, Mitsuhiro; and Kuroyama, Toshinobu, 4,063,247, Cl. 343-704.000.
Toda, Tadahide; and Konomi, Toshiaki, 4,062,334, Cl. 123-122.0AB.
Tran, Duc Tien; Kervizic, Jacques; and Hurt, Bernard, to C.G.R.-MeV. High-frequency focusing device for focusing a beam of charged particles accelerated within a cyclotron. 4,063,125, Cl. 313-62.000.
Transco Products, Inc.: *See—*
Greiser, John W., 4,063,246, Cl. 343-700.0MS.
Transit Products Company, Inc.: *See—*
Hixson, Richard M., 4,062,490, Cl. 238-338.000.
Trepege Products Inc.: *See—*
Chen, Trevor G., 4,062,578, Cl. 292-262.000.
Treuner, Uwe D.: *See—*
Breuer, Hermann; and Treuner, Uwe D., 4,063,019, Cl. 544-27.000.
Tripp, Karl Heinz, to Lindemann Maschinenfabrik GmbH. Scrap shearing machine and method of handling scrap. 4,062,281, Cl. 100-35.000.
Trischler, Gunter: *See—*
Willmann, Erich; and Trischler, Gunter, 4,063,071, Cl. 235-92.00T.
Tritenne, Claude Henri Eugene. Connecting device. 4,062,613, Cl. 339-95.00B.
TRW Inc.: *See—*
Yamada, Arthur S., 4,062,751, Cl. 204-212.000.
Tsao, George T.; and Chen, Li Fu, to Purdue Research Foundation. Porous cellulose beads and the immobilization of enzymes therewith. 4,063,017, Cl. 536-57.000.
Tsubaki, Toshio: *See—*
Ito, Syoichi; and Tsubaki, Toshio, 4,063,253, Cl. 346-75.000.
Tsuchida, Hideo: *See—*
Yoshida, Hiroshi; Kuwabara, Yoshitaka; and Tsuchida, Hideo, 4,062,196, Cl. 61-72.700.
Tsuruta, Hidemasa; and Nemoto, Ryoichi, to Nittetu Chemical Engineering Ltd. Solid-fluid contacting apparatus. 4,062,777, Cl. 210-264.000.
Tucker, Terry A.: *See—*
Isbister, Eric J.; Klepach, Robert J.; Riggs, Robert F.; and Tucker, Terry A., 4,063,240, Cl. 343-9.000.
Tung, Ta-Cheng; and Lin, Jung-Yaw, to Eisai Co., Ltd. Abrin composition of reduced toxicity. 4,062,949, Cl. 424-180.000.
Turner, Bruce Munson: *See—*
Hennessy, James William; and Turner, Bruce Munson, 4,063,309, Cl. 364-555.000.
Turner, Dennis Robert, to Bell Telephone Laboratories, Incorporated. Electroplating anode plenum. 4,062,755, Cl. 204-275.000.
Turner, Sam R., to Xerox Corporation. Fluorenone carboxyle acid esters. 4,062,886, Cl. 560-21.000.
U. Zip International, S. A.: *See—*
Rojahn, Fred H.; and Lichtenberg, Jose, 4,062,919, Cl. 264-145.000.
Uchiyama, Takashi: *See—*
Mashimo, Yukio; Uchiyama, Takashi; and Sorimachi, Kanehiro, 4,063,257, Cl. 354-31.000.
Ueda, Shozo: *See—*
Kato, Takashi; Yoshizawa, Toshio; Suzuki, Yoshihisa; and Ueda, Shozo, 4,062,439, Cl. 198-470.000.
Ueda, Toshio: *See—*
Fujita, Shigeru; Murayama, Koichi; Kaneda, Toyohito; Harada, Susumu; and Ueda, Toshio, 4,062,742, Cl. 204-55.00R.
Uemlianin, Andray: *See—*
Hawkes, David A.; Uemlianin, Andray; and Lubanska, Hope, 4,062,674, Cl. 75-61.000.
Ueno, Hiroshi; Inaba, Naomi; Makishima, Tokuo; and Wada, Shozo, to Toa Nenryo Kogyo Kabushiki Kaisha. Process for the production of a catalyst component for use in the polymerization of alpha olefins. 4,062,804, Cl. 252-429.00B.
Ulbrich, Karel: *See—*
Kopecek, Jinrich; Ulbrich, Karel; Vacik, Jiri; Strohalm, Jiri; Chytry, Vladimir; Drobnik, Jaroslav; and Kalal, Jaroslav, 4,062,831, Cl. 260-47.0UA.
Union Carbide Corporation: *See—*
Berger, Sidney Ethan, 4,062,693, Cl. 106-308.00Q.
D'Silva, Themistocles D. J., 4,062,969, Cl. 424-278.000.
Fay, Homer; Quets, Jean Marie; and Hatwell, Henri, 4,062,765, Cl. 209-1.000.
Union Insulating Company: *See—*
Arnold, William O., 4,062,512, Cl. 248-309.00R.
Union Oil Company of California: *See—*
Ward, John W., 4,062,809, Cl. 252-455.00R.
Union Special G.m.b.H.: *See—*
Gauch, Hermann; and Schopf, Dieter, 4,062,310, Cl. 112-280.000.
Uniroyal AG: *See—*
Bertrand, Marcel J., 4,062,393, Cl. 152-361.00R.
United Kingdom Atomic Energy Authority: *See—*
Broadley, Donald, 4,062,724, Cl. 176-38.000.
United Kingdom of Great Britain and Northern Ireland, The Secretary of State for Defence in Her Britannic Majesty's Government of the: *See—*
James, James Roderick; and Wilson, Geoffrey John, 4,063,245, Cl. 343-700.0MS.
United Merchants and Manufacturers, Inc.: *See—*
Klein, Charles, 4,062,093, Cl. 26-2.00R.
U.S. Divers Co.: *See—*
Merrifield, Daniel B., 4,062,356, Cl. 128-142.200.
United States of America
Agriculture: *See—*
Mod, Robert R.; Harris, James A.; Arthur, Jett C., Jr.; Magne, Frank C.; Sumrell, Gene; and Novak, Arthur F., 4,062,841, Cl. 260-239.0BF.
Army: *See—*
King, Gerard J., 4,063,268, Cl. 357-30.000.
Magnuson, Roland A., 4,062,598, Cl. 305-58.0PC.
O'Hara, Peter J.; and De Leo, Louis P., 4,062,126, Cl. 33-236.000.
Pullen, Keats A., Jr., 4,063,297, Cl. 361-14.000.
Rio, Russell L., 4,062,329, Cl. 123-41.120.
Roberts, Thomas G., 4,063,096, Cl. 250-343.000.
Stephens, John A.; and Kibler, Ralph J., 4,062,508, Cl. 244-83.00F.
Energy Research and Development Administration: *See—*
Bernhardt, Anthony F., 4,063,090, Cl. 250-284.000.
Bobo, Gerald E., 4,062,515, Cl. 251-167.000.
Gamba, Otto O. M., 4,063,089, Cl. 250-272.000.
Mamantov, Gleb; and Marassi, Roberto, 4,063,005, Cl. 429-103.000.
Pasini, Joseph, III; Shuck, Lowell Z.; and Overbey, William K., Jr., 4,062,404, Cl. 166-259.000.
Rink, John P., 4,063,190, Cl. 331-94.50G.
Interior: *See—*
Henrie, Thomas A.; Lindstrom, Roald E.; and Lei, Kenneth P. V., 4,062,744, Cl. 204-106.000.
McIlvanie, William A., 4,062,412, Cl. 175-57.000.
Roepke, Wallace W.; Lindroth, David P.; and Wilson, Richard J., 4,062,595, Cl. 299-18.000.
National Aeronautics and Space Administration; administrator; with respect to an invention of:
Ford, Allen G. Motion restraining device. 4,062,245, Cl. 74-81.000.
National Aeronautics and Space Administration: *See—*
Berdahl, C. Martin, 4,063,092, Cl. 250-322.000.
Dailey, Carroll C., 4,063,088, Cl. 250-272.000.
Exton, Reginald J., 4,063,282, Cl. 358-106.000.
Heyman, Joseph S., 4,062,227, Cl. 73-630.000.
Jensen, Ronald N., 4,062,347, Cl. 126-270.000.
Keafer, Lloyd S., Jr.; Burcher, Ernest E.; and Kopia, Leonard P., 4,062,996, Cl. 428-334.000.
Rogowski, Robert S.; and Long, Edward R., Jr., 4,062,650, Cl. 23-232.00E.
Navy: *See—*
Abbott, Frank R., 4,063,215, Cl. 340-8.0LF.
Adolph, Horst G., 4,062,897, Cl. 260-615.00A.
Anderson, Wallace E.; Krall, Albert D.; Syeles, Albert M.; and Vansant, Oscar J., 4,063,243, Cl. 343-100.0SA.
Day, Robert A., 4,062,105, Cl. 29-594.000.
Gennetten, Edward W., 4,063,291, Cl. 360-40.000.
Hawthorne, M. Frederick; and Kalb, William, 4,062,883, Cl. 260-429.00R.
Murphy, Francis G., 4,063,006, Cl. 429-119.000.
Peters, Peter A. C., 4,062,605, Cl. 312-235.00R.
Phelps, Howard N., Jr.; and Power, Dennis O., 4,062,422, Cl. 181-198.000.
Rubin, David, 4,063,186, Cl. 330-287.000.
Treasury: *See—*

Stephan, Edward R., 4,063,044, Cl. 179-81.00C.
U.S. Philips Corporation: *See—*
Blackman, Maurice V.; and Jenner, Michael D., 4,062,107, Cl. 29-628.000.
van der Mark, Jacobus, 4,063,109, Cl. 307-106.000.
van Rosmalen, Gerard Eduard, 4,063,287, Cl. 358-128.000.
Wagner, Wolfgang, 4,063,074, Cl. 364-414.000.
United States Steel Corporation: *See—*
Griffiths, David Kallom, 4,062,530, Cl. 266-222.000.
Mentzel, Sigmund T., 4,062,214, Cl. 72-34.000.
United Technologies Corporation: *See—*
Day, Edward George, 4,062,396, Cl. 164-15.000.
Mercik, Henry J., Jr.; and Armstrong, Lee R., 4,062,231, Cl. 73-116.000.
University of Delaware: *See—*
Austin, Paul R., 4,062,921, Cl. 264-233.000.
Austin, Paul R., 4,063,016, Cl. 536-20.000.
University of Southern California: *See—*
Whelan, James M., 4,062,932, Cl. 423-574.00R.
University of Washington: *See—*
Allan, G. Graham; and Neogi, Sreeman Amar Nath, 4,062,855, Cl. 260-295.0PA.
Unoki, Shigeki: *See—*
Hanamoto, Yukimitsu; and Unoki, Shigeki, 4,062,216, Cl. 72-128.000.
UOP Inc.: *See—*
Schmerling, Louis, 4,062,904, Cl. 260-668.00R.
Weik, Kirby B., 4,062,298, Cl. 105-482.000.
Upjohn Company, The: *See—*
Antosz, Frederick J.; Haak, Willard J.; and Wovcha, Merle G., 4,062,880, Cl. 260-397.100.
Biggs, Candice B.; Pyke, Thomas R.; and Wovcha, Merle G., 4,062,729, Cl. 195-51.00S.
Magerlein, Barney J., 4,063,026, Cl. 560-121.000.
Ura, Masaaki: *See—*
Yoshimoto, Takeo; Igarashi, Keiichi; Harayama, Takeo; Ura, Masaaki; Toyama, Teruhiko; Morikawa, Osamu; Takasawa, Yoshio; and Hojo, Yoshikata, 4,062,896, Cl. 260-613.00R.
Uskokovic, Milan Radoje: *See—*
Confalone, Pasquale Nicholas; Lollar, Elizabeth Dianne; Pizzolato, Giacomo; and Uskokovic, Milan Radoje, 4,062,868, Cl. 260-332.20A.
Utiyama, Susumu: *See—*
Hatanaka, Kyohei; Inoue, Hajime; Hisatomi, Haruya; Okuda, Koya; Suzuki, Takeshi; Murao, Mikio; and Utiyama, Susumu, 4,062,667, Cl. 65-135.000.
Uyeda, Tim M., to Sargent & Greenleaf, Inc. Time locks. 4,062,210, Cl. 70-268.000.
Vacik, Jiri: *See—*
Kopecek, Jinrich; Ulbrich, Karel; Vacik, Jiri; Strohalm, Jiri; Chytry, Vladimir; Drobnik, Jaroslav; and Kalal, Jaroslav, 4,062,831, Cl. 260-47.0UA.
Vaderlinde, William: *See—*
Morgan, Albert W.; Schumacher, Ignatius; and Vaderlinde, William, 4,062,909, Cl. 260-928.000.
Vaill, Ronald E.: *See—*
Kovatch, George N.; Vaill, Ronald E.; and Kepes, William E., 4,062,465, Cl. 214-516.000.
Valdmanis, Edgars: *See—*
Perr, Julius P.; Schutz, Peter W.; Badgley, Patrick R.; and Valdmanis, Edgars, 4,062,230, Cl. 73-114.000.
Vallere, Donald J.: *See—*
Roth, Marvin E.; and Vallere, Donald J., 4,062,319, Cl. 118-49.100.
Vallot, Roger: *See—*
Buvet, Rene; Vallot, Roger; Messina, Richard; Gal, Jacques; and Yu, Liang-Tse, 4,062,745, Cl. 204-131.000.
Valmet Oy: *See—*
Hietala, Veijo, 4,062,226, Cl. 73-63.000.
Matikainen, Martti, 4,062,252, Cl. 74-801.000.
Riihinen, Jaakko, 4,062,097, Cl. 29-116.0AD.
van Acker, Eduard M. A. A. J.; and Bijl, Geert J. M., to Shell Oil Company. Process for bulk copolymerization of vinyl esters. 4,062,908, Cl. 260-885.000.
Van Allan, James Albert; Cunningham, Michael Paul; Specht, Donald Paul; and Farid, Samir Yacoub, to Eastman Kodak Company. Sensitizers for photocrosslinkable polymers. 4,062,686, Cl. 96-115.00R.
Van Brandt, Rene Alois: *See—*
Laridon, Urbain Leopold; Van Prandt, Rene Alois; and Poot, Albert Lucien, 4,062,682, Cl. 96-2[illegible].00L.
Van de Kop, Franz, to Odom Offshore Surveys, Inc. Receiver/timing apparatus for a single frequency, time-shared positioning system. 4,063,244, Cl. 343-105.00R.
van den Boomen, Mart: *See—*
Wiemer, Willem; and van den Boomen, Mart, 4,062,661, Cl. 55-190.000.
van der Burg, Willem Jacob, to Akzona Incorporated. Amino-substituted 1,2,3,4-tetrahydro-9H-tribenzo[b,d,f]azepines. 4,062,840, Cl. 260-239.00D.
van der Burg, Willem Jacob, to Akzona Incorporated. Tetracyclic compounds. 4,062,848, Cl. 260-268.0PC.
Vander Lugt, Anthony: *See—*
Kozma, Adam; Vander Lugt, Anthony; and Bardos, Andrew M., 4,063,226, Cl. 365-125.000.
van der Mark, Jacobus, to U.S. Philips Corporation. Clock pulse system. 4,063,109, Cl. 307-106.000.
Van Eyck, Michael J.; and Burdett, Kenneth A., to Dow Chemical Company, The. Biuret polyisocyanates. 4,062,833, Cl. 260-77.5AT.
van Geenen, Albert A.: *See—*
denOtter, Marinus J. A. M.; and van Geenen, Albert A., 4,063,020, Cl. 544-221.000.
van Klinken, Jakob: *See—*
Goudriaan, Frans; and van Klinken, Jakob, 4,062,758, Cl. 208-80.000.
van Os, Jan Lambert: *See—*
Vos, Cornelis; Den Admirant, Jacobus; van Os, Jan Lambert; Jongsma, Hendrik Marten; and Kooreman, Hermanus Jacobus, 4,062,948, Cl. 424-180.000.
Van Poucke, Raphael Karel: *See—*
Monbaliu, Marcel Jacob; Van Poucke, Raphael Karel; Vrydaghs, Roger Henri; Credner, Hans-Heinrich; and Meier, Ernst, 4,062,683, Cl. 96-56.500.
van Rosmalen, Gerard Eduard, to U.S. Philips Corporation. Tracking mirror device for a video disc player. 4,063,287, Cl. 358-128.000.
Vansant, Oscar J.: *See—*
Anderson, Wallace E.; Krall, Albert D.; Syeles, Albert M.; and Vansant, Oscar J., 4,063,243, Cl. 343-100.0SA.
Van Thyne, Ray J.: *See—*
Rausch, John J.; and Van Thyne, Ray J., 4,062,484, Cl. 226-196.000.
Vapor Corporation: *See—*
O'Connor, Jon Francis, 4,062,273, Cl. 98-8.000.
Vari-L Company, Inc.: *See—*
Milligan, Thomas A.; and Will, Peter, 4,063,176, Cl. 325-446.000.
Varian Associates, Inc.: *See—*
Patterson, Paul Louis, 4,063,156, Cl. 324-33.000.
Varrasso, Eugene C.; and Maddux, John F., to Owens-Corning Fiberglas Corporation. Method of and apparatus for monitoring for electrode displacement in the Joule effect heating of heat softenable material. 4,063,027, Cl. 13-6.000.
Vasile, Carmine F., to Rockwell International Corporation. Band-pass filter with surface acoustic wave devices. 4,063,202, Cl. 333-72.000.
Vastag, Joseph, to W. R. Grace & Co. Sand containing flux. 4,062,703, Cl. 148-26.000.
Vaughan, Richard N.: *See—*
Welsh, John; Vaughan, Richard N.; and Gordon, Lloyd L., 4,063,229, Cl. 340-280.000.
Veenendaal, Cornelis Teunis, to Tektronix, Inc. Cathode ray tube mounting means including lighting means and camera-connecting means. 4,063,289, Cl. 358-242.000.
Vekshin, Vyacheslav Sergeevich: *See—*
Basov, Nikolai Gennadievich; Berezhnoi, Igor Alexandrovich; Vekshin, Vyacheslav Sergeevich; Danilychev, Vladimir Alexandrovich; Elatontsev, Albert Ivanovich; Ignatiev, Vladimir Vasilievich; Karyshev, Vitaly Dmitrievich; and Togulev, Alexandr Konstantinovich, 4,063,218, Cl. 340-26.000.
Verhaeghe, Michel Paul: *See—*
Delarue, Gerard Jean-Marie; and Verhaeghe, Michel Paul, 4,063,070, Cl. 235-474.000.
Vick, Edward L.; and Smith, Arlie E. Ballast tamping tool. 4,062,291, Cl. 104-10.000.
Vidovic, Nikola; and Guisinger, Barrett E., to International Video Corporation. Self-tracking injection lock voltage controlled oscillator. 4,063,279, Cl. 358-19.000.
Villari, Frank K.: *See—*
Davenport, Stanley; and Villari, Frank K., 4,062,068, Cl. 2-421.000.
Vincent, Herman C. Hay bale loader. 4,062,461, Cl. 214-85.500.
Vinches, Rene; and Moirez, Jacques, to Societe d'Optique, Precision, Electronique et Mecanique Sopelem. Apparatus for conducting firing. 4,062,267, Cl. 89-41.00E.
Vinczer, Peter. Clasp mechanism. 4,062,089, Cl. 24-97.000.
Vitins, Michael, to BBC Brown Boveri & Company Limited. Apparatus for localization of a line fault through the use of predeterminably shiftable reference location. 4,063,163, Cl. 324-52.000.
Vitins, Michael: *See—*
Glavitsch, Hans; and Vitins, Michael, 4,063,166, Cl. 324-52.000.
Lanz, Otto; and Vitins, Michael, 4,063,160, Cl. 324-52.000.
Lanz, Otto; and Vitins, Michael, 4,063,162, Cl. 324-52.000.
Lanz, Otto; Mastner, Jiri; and Vitins, Michael, 4,063,164, Cl. 324-52.000.
VMEI "Lenin" - NIS: *See—*
Chuparov, Nikola Tomov; Pakyov, Dobri Tzvetkov; Papazov, Peter Nachev; and Savov, Tzvetan Mladenov, 4,062,219, Cl. 72-422.000.
Vock, Manfred Hugo: *See—*
Sprecker, Mark A.; Vock, Manfred Hugo; Schmitt, Frederick Louis; Hall, John B.; and Sanders, James Milton, 4,062,894, Cl. 260-586.00R.
Vogt, B. Richard: *See—*
Hoehn, Hans; Bernstein, Jack; and Vogt, B. Richard, 4,062,858, Cl. 260-296.00P.
Vogt, Berthold Richard: *See—*
Wade, Peter C.; and Vogt, Berthold Richard, 4,062,953, Cl. 424-232.000.
Vogt, Wilhelm; Glaser, Hermann; and Dyrschka, Helmut, to Hoechst Aktiengesellschaft. Carrier-supported catalyst. 4,062,810, Cl. 252-462.000.
Vollerin, Bernard: *See—*
Meier, John G.; and Vollerin, Bernard, 4,062,325, Cl. 122-225.00R.
Vollnhals, Friedemann, to Siemens Aktiengesellschaft. Method of transmitting digital data of a PCM/TDM telecommunication network. 4,063,041, Cl. 179-15.0BV.

von Skwarski, Bernhard. Automatic plant watering arrangement. 4,062,491, Cl. 239-66.000.
VOP Inc.: *See—*
Burton, Vance P.; and Mikulicz, Michael Z., 4,062,801, Cl. 252-414.000.
Vos, Cornelis; Den Admirant, Jacobus; van Os, Jan Lambert; Jongsma, Hendrik Marten; and Kooreman, Hermanus Jacobus, to Gist-Brocades N.V. Dihydromocimycin antibiotics. 4,062,948, Cl. 424-180.000.
Vosatka, Walter. Eyeglass pocket shirt. 4,062,064, Cl. 2-252.000.
Voumard, Martial: *See—*
Huguenin, Raymond; Matthey, Hubert; and Voumard, Martial, 4,062,154, Cl. 51-319.000.
Vrydaghs, Roger Henri: *See—*
Monbaliu, Marcel Jacob; Van Poucke, Raphael Karel; Vrydaghs, Roger Henri; Credner, Hans-Heinrich; and Meier, Ernst, 4,062,683, Cl. 96-56.500.
W. A. Whitney Corporation: *See—*
Brolund, Theodore F.; Rolland, Burton A.; and Pauley, Merle R., 4,063,059, Cl. 219-68.000.
W. B. Van Nest Company: *See—*
Powers, Gilbert L., 4,062,277, Cl. 99-483.000.
W. Canning Limited: *See—*
James, Barrie Sidney; and Wyszynski, Apolonious, 4,062,739, Cl. 204-50.00Y.
W. R. Grace & Co.: *See—*
Vastag, Joseph, 4,062,703, Cl. 148-26.000.
Wacker-Chemie GmbH: *See—*
Manner, Erich; Adler, Klaus; Pichler, Engelbert; Bauer, Johann; and Sommer, Hans, 4,062,715, Cl. 156-334.000.
Wacker-Chemitronic Gesellschaft fur Elektronik Grundstoffe mbH: *See—*
Griesshammer, Rudolf; Koppl, Franz; Goppinger, Alois; Hamster, Helmut; and Thalmeier, Josef, 4,062,714, Cl. 156-304.000.
Wada, Shozo: *See—*
Ueno, Hiroshi; Inaba, Naomi; Makishima, Tokuo; and Wada, Shozo, 4,062,804, Cl. 252-429.00B.
Wade, Peter C.; and Vogt, Berthold Richard, to E. R. Squibb & Sons, Inc. Various 2-substituted-1H-benz[de]isoquinoline-1,3(2H)-diones. 4,062,953, Cl. 424-232.000.
Wadsworth, Stuart E.: *See—*
Chaplin, Henry D., Jr.; and Wadsworth, Stuart E., 4,062,503, Cl. 242-35.50R.
Wagers, Robert S.; and Hartmann, Clinton S., to Texas Instruments Incorporated. Acoustic ridge interactive structure. 4,063,198, Cl. 333-30.00R.
Wagner, Eugene R.; and Allen, Bobbie J., to Dow Chemical Company, The. Amino substituted arylthio-alkanoic acids having hypolipidemic activity. 4,062,975, Cl. 424-319.000.
Wagner, Wolfgang, to U.S. Philips Corporation. Device for measuring radiation absorption or radiation emission distributions in a plane through a body. 4,063,074, Cl. 364-414.000.
Wajs, Georges; and Lenne, William, to Essilor International (Compagnie Generale d'Optique S.A.). Flexible contact lens. 4,062,627, Cl. 351-160.000.
Waku, Toshihiko: *See—*
Komatsubara, Michimasa; Waku, Toshihiko; Fukai, Tetsuya; and Satsuka, Akito, 4,063,201, Cl. 333-70.00R.
Walden, Jack M.: *See—*
Watson, Robert E.; Walden, Jack M.; and Near, Charles W., 4,063,221, Cl. 364-900.000.
Walders Kohinoor, Inc.: *See—*
Coch, Lester, 4,062,990, Cl. 427-242.000.
Waldhecker, Heinz-Dieter: *See—*
Pfeiffer, Roland; Bongert, Wilhelm; and Waldhecker, Heinz-Dieter, 4,062,127, Cl. 34-1.000.
Waldstein, David A. Bactericidal and fungicidal 1,3,5 trialkanol triazines. 4,062,957, Cl. 424-249.000.
Waliczek, Harvey: *See—*
Dupre, George T.; DeMarco, Thomas M.; Borkowski, Lawrence E.; and Waliczek, Harvey, 4,062,664, Cl. 55-319.000.
Walker, Edgar, III. Tunable electrical component. 4,063,206, Cl. 336-45.000.
Walker, Francis H.: *See—*
Baker, Don R.; and Walker, Francis H., 4,062,977, Cl. 424-324.000.
Walker, William C. String instrument tuning system. 4,062,265, Cl. 84-312.00R.
Wallace, Donald L.; and Martina, Wallace P., to Martina, Henry. System for separating ferromagnetic materials from non-ferromagnetic materials. 4,062,443, Cl. 198-619.000.
Wallace Expanding Machines, Inc.: *See—*
Roper, Ralph E., 4,062,215, Cl. 72-62.000.
Wallace Murray Corporation: *See—*
Cutler, John Frederick; and Khanna, Jai Krishen, 4,062,188, Cl. 60-599.000.
Wallace, Wm. Dean: *See—*
Clark, Justin S.; and Wallace, Wm. Dean, 4,062,373, Cl. 137-3.000.
Walling, Gary Allen, to Babcock & Wilcox Company, The. Nozzle seal. 4,062,726, Cl. 176-87.000.
Walther, Ronald Gene: *See—*
Eichelberger, Edward Baxter; Muehldorf, Eugene Igor; Walther, Ronald Gene; and Williams, Thomas Walter, 4,063,080, Cl. 235-302.000.
Wanlass, Cravens L., to Cravens Research Company. Electric motor having controlled magnetic flux density. 4,063,135, Cl. 318-220.00A.
Ward, David M., to Potter Electric Signal Co. Pneumatic retard having stroke-accelerating valve. 4,062,377, Cl. 137-523.000.
Ward, John W., to Union Oil Company of California. Catalyst for production of middle distillate oils. 4,062,809, Cl. 252-455.00R.
Warenback, Melvin S. Card forming pedestal display device. 4,062,138, Cl. 40-124.100.
Wassen, Willem J.: *See—*
De Rooij, Abraham H.; Prop, Jozef M. G.; and Wassen, Willem J., 4,062,927, Cl. 423-387.000.
Wasserman, David. Unicycle. 4,062,558, Cl. 280-205.000.
Waszek, Glen F.: *See—*
Arn, Robert M.; and Waszek, Glen F., 4,063,234, Cl. 340-334.000.
Watabe, Yoji; Ishii, Michio; and Iseda, Yutaka, to Bridgestone Tire Company, Ltd. Polyurethane composition having improved tear strength and process for preparation thereof. 4,062,825, Cl. 260-37.00N.
Watson, Robert E.; Walden, Jack M.; and Near, Charles W., to Hewlett-Packard Company. Programmable calculator. 4,063,221, Cl. 364-900.000.
Watson, William E.: *See—*
Frahm, Bradley K.; and Watson, William E., 4,062,384, Cl. 141-46.000.
Watts, Eric Alfred, to Beecham Group Limited. Chroman derivatives. 4,062,870, Cl. 260-345.200.
Watts, Thomas E.; and Watts, Thomas R. Container filling machine. 4,062,168, Cl. 53-64.000.
Watts, Thomas R.: *See—*
Watts, Thomas E.; and Watts, Thomas R., 4,062,168, Cl. 53-64.000.
Webasto-Werk W. Baier GmbH & Co.: *See—*
Jardin, Hans; and Ofner, Johann, 4,062,636, Cl. 403-13.000.
Weber, Ernest G.: *See—*
Lacagnina, John M.; Weber, Ernest G.; Rucinski, David W.; and Robinson, Bruce R., 4,062,120, Cl. 33-166.000.
Weber, Milton N. Bicycle drive system. 4,062,421, Cl. 180-65.00A.
Weik, Kirby B., to UOP Inc. Anti rattle track fitting. 4,062,298, Cl. 105-482.000.
Weiler, Ernest D.; and Miller, George A., to Rohm and Haas Company. Halogenated 3-isothiazolidinone 1-oxide and 1,1-dioxides. 4,062,859, Cl. 260-302.00A.
Weiss, Adolph D., to Hickok Manufacturing Co., Inc. Apparel belt with concealed pocket. 4,062,066, Cl. 2-322.000.
Weitz, Paul G., Jr.: *See—*
Lamphere, David A.; and Weitz, Paul G., Jr., 4,062,223, Cl. 73-27.00R.
Welch, Clarence A.: *See—*
Bartlett, Harold H., Jr.; Herr, Charles H., Jr.; Kinney, Lionel L.; Lamport, Ivan R.; and Welch, Clarence A., 4,062,234, Cl. 73-135.000.
Wellman, George R.: *See—*
Anderson, Elvin L.; Mendelson, Wilford L.; and Wellman, George R., 4,063,023, Cl. 548-342.000.
Wells Manufacturing Corporation: *See—*
Fricke, Roy A., 4,062,155, Cl. 51-412.000.
Welsh, John; Vaughan, Richard N.; and Gordon, Lloyd L., to Sensormatic Electronics Corporation. Article surveillance. 4,063,229, Cl. 340-280.000.
Weltronic Company: *See—*
Collom, Donald J., 4,063,075, Cl. 364-119.000.
Werkzeugmaschinenfabrik Oerlikon-Buhrle AG: *See—*
Mayer, Cornelius, 4,062,290, Cl. 102-70.20R.
West Electric Company, Ltd.: *See—*
Toyoshima, Sakae, 4,063,260, Cl. 354-149.000.
West, Norvel P. Fender trim apparatus for vehicles. 4,062,580, Cl. 293-62.000.
Westendorp, Willem F.: *See—*
Rich, Joseph A.; and Westendorp, Willem F., 4,063,126, Cl. 313-146.000.
Westerman, Ira John, to B. F. Goodrich Company, The. Water absorbent polymers comprising unsaturated carboxylic acid, acrylic ester containing alkyl group 10-30 carbon atoms, and another acrylic ester containing alkyl group 2-8 carbon atoms. 4,062,817, Cl. 260-17.45G.
Western Digital Corporation: *See—*
Armstrong, William Eddie, 4,062,699, Cl. 148-1.500.
Western Electric Co., Inc.: *See—*
Hentz, Lyle J.; and Otto, Willard G., 4,062,462, Cl. 214-152.000.
Roth, Marvin E.; and Vallere, Donald J., 4,062,319, Cl. 118-49.100.
Western Marine Electronics, Inc.: *See—*
Sublett, Kenneth L., 4,063,212, Cl. 340-3.00F.
Westinghouse Electric Corporation: *See—*
Kovatch, George N.; Vaill, Ronald E.; and Kepes, William E., 4,062,465, Cl. 214-516.000.
Mattern, John, 4,063,200, Cl. 333-70.00A.
Weston, George Oliver, to John Wyeth & Brother Limited. Process for preparation of tryptophols. 4,062,869, Cl. 260-326.160.
Whatman Reeve Angel Limited: *See—*
Strauss, Richard; and Kimball, Philip C., 4,062,781, Cl. 210-446.000.
Wheelabrator-Frye, Inc.: *See—*
O'Dell, David L.; and Shaffer, Leo A., 4,062,425, Cl. 184-105.00A.
Whelan, James M., to University of Southern California. Process for the catalytic oxidation of hydrogen sulfide with sulfur dioxide. 4,062,932, Cl. 423-574.00R.
Whipple, Sharon S.: *See—*
Pierce, James K.; and Whipple, Sharon S., 4,062,853, Cl. 260-294.80G.

Whirlpool Corporation: *See—*
Barry, Patrick J.; and Skinner, Frank R., II, 4,062,440, Cl. 198-478.000.
Miller, Samuel Jacob; and Smith, Erwin George, 4,062,282, Cl. 100-53.000.
White, Gerald L.: *See—*
Eisenberg, Arnold J.; Klink, Jerome P.; Symborski, Alex P.; and White, Gerald L., 4,062,501, Cl. 242-18.00G.
White, James A.; and Maynard, Thomas C., to Nalco Chemical Company. Method for neutralizing acidic components in petroleum refining units using an alkoxyalkylamine. 4,062,764, Cl. 208-348.000.
Whiteley, Isaac C. Air heating and circulating apparatus. 4,062,345, Cl. 126-121.000.
Whitfill, Donald L.: *See—*
Dew, John N.; Whitfill, Donald L.; and Crumb, Robert E., 4,062,405, Cl. 166-272.000.
Whiting, Kevin: *See—*
Zugcic, Joseph P.; and Whiting, Kevin, 4,062,311, Cl. 113-7.00R.
Widner College: *See—*
Scott, Howard L., 4,062,939, Cl. 424-70.000.
Wieder, Solomon. Balancing radiometer. 4,063,095, Cl. 250-338.000.
Wiemer, Willem; and van den Boomen, Mart, to Koninklijke Machinefabriek Stork B.V. Diffuser for finely dividing a liquid, particularly water to be degassed. 4,062,661, Cl. 55-190.000.
Wiener, Hans, to Pressmaster AB. Cutting or pressing appliances. 4,062,218, Cl. 72-409.000.
Wilbur, Robert Daniel: *See—*
Spicer, Larry Dean; Pensack, Joseph Michael; Wilbur, Robert Daniel; and Demkovich, Gary Michael, 4,062,856, Cl. 260-295.50B.
Wilcox, Milton E., to National Semiconductor Corporation. Differential transistor pair integrated circuit oscillator with L-C tank circuit. 4,063,193, Cl. 331-117.00R.
Wilczewski, Robert H.: *See—*
Kondur, Nicholas, Jr.; Wilczewski, Robert H.; and Myers, Charles M., 4,062,436, Cl. 197-82.000.
Wilhelm Stoll, Maschinenfabrik GmbH: *See—*
Knuesting, Gregor, 4,062,174, Cl. 56-370.000.
Will, Peter: *See—*
Milligan, Thomas A.; and Will, Peter, 4,063,176, Cl. 325-446.000.
Willcocks, Martin Edmund George, to Bogue, John C.; and Ruggles, Wesley, Jr. Constant power balance controls for stereophonic and quadraphonic sound systems. 4,063,032, Cl. 179-1.0GQ.
Williams, Frederick R.: *See—*
Mains, Harold E.; Williams, Frederick R.; and O'Brien, William L., 4,062,819, Cl. 260-18.00N.
Williams, Howard E., to Litton Systems, Inc. Coil structure. 4,063,207, Cl. 336-171.000.
Williams, Lee B. Radiographic table with movable grid assembly. 4,063,100, Cl. 250-452.000.
Williams, Thomas Walter: *See—*
Eichelberger, Edward Baxter; Muehldorf, Eugene Igor; Walther, Ronald Gene; and Williams, Thomas Walter, 4,063,080, Cl. 235-302.000.
Willmann, Erich; and Trischler, Gunter, to Simplex Time Recorder Co. Flexitime recorder. 4,063,071, Cl. 235-92.00T.
Wilson, Christopher George: *See—*
Paddison, Eric; Perez-Cavero, Leonardo; and Wilson, Christopher George, 4,063,300, Cl. 361-78.000.
Wilson, Floyd, Jr. Insulated glass and sealant therefor. 4,063,002, Cl. 428-411.000.
Wilson, Geoffrey John: *See—*
James, James Roderick; and Wilson, Geoffrey John, 4,063,245, Cl. 343-700.0MS.
Wilson, Hugh R. Bowstring draw and release mechanism. 4,062,339, Cl. 124-35.00A.
Wilson, John R.; and Burke, Noel I., to Teepak, Inc. Humidifying and shirring edible collagen sausage casing. 4,062,980, Cl. 426-278.000.
Wilson, Richard J.: *See—*
Roepke, Wallace W.; Lindroth, David P.; and Wilson, Richard J., 4,062,595, Cl. 299-18.000.
Wilson, Wayne Richard; and Kirkpatrick, William James, to Alcan Research and Development Limited. Mandrel for explosive welding tubular members. 4,062,570, Cl. 285-22.000.
Winter, William E., Jr.: *See—*
Howard, Kent A.; Winter, William E., Jr.; Moritz, Karsten H.; and Paynter, John D., 4,062,762, Cl. 208-211.000.
Winthrop, John Talley, to American Optical Corporation. Progressive power ophthalmic lens having a plurality of viewing zone with discontinuous power variations therebetween. 4,062,629, Cl. 351-169.000.
Wisconsin Alumni Research Foundation: *See—*
Rich, Daniel H.; and Gurwara, Sweet K., 4,062,746, Cl. 204-159.120.
Wissel, Kurt: *See—*
Kuxdorf, Bernhard; Kaiser, Karl; and Wissel, Kurt, 4,062,662, Cl. 55-206.000.
Witenhafer, Donald Edward; Daniels, Charles Anthony; and Koebel, Ralph Francis, to B. F. Goodrich Company, The. Oxidation of vinylidene halides by permanganates in gaseous or aqueous process streams. 4,062,925, Cl. 423-240.000.
Witney, Brian G. Downhill ski racing game. 4,062,545, Cl. 273-134.0AE.
Wocher, Berthold: *See—*
Nier, Johannes; Bollhagen, Heins; and Wocher, Berthold, 4,063,237, Cl. 343-7.0VM.
Wojcik, Edward P., to Signode Corporation. Sealless strap end alignment and connection means. 4,062,086, Cl. 24-20.0EE.
Wold, Harold A.: *See—*
Snyder, Richard C.; and Wold, Harold A., 4,062,297, Cl. 105-480.000.
Wolf, Rainer: *See—*
Mauric, Claudine; and Wolf, Rainer, 4,062,687, Cl. 106-15.0FP.
Wolfangel, Robert G., to Mallinckrodt, Inc. Colloidal compositions with protective agents suitable for radioactive labeling. 4,062,933, Cl. 424-1.000.
Wolfe, Paul G.: *See—*
Eckenbrecht, Robert R.; and Wolfe, Paul G., 4,063,288, Cl. 358-148.000.
Wolters, Richard H., to Herman Miller, Inc. Back position control device for chairs. 4,062,587, Cl. 297-306.000.
Wood, Dale A.: *See—*
Mueller, Otto, Jr.; and Wood, Dale A., 4,062,560, Cl. 280-478.00R.
Wood, George A.; and Torfason, Louis E. Mechanism modeling. 4,062,130, Cl. 35-13.000.
Wood, John Frederick Barry: *See—*
Hazelett, Robert William; and Wood, John Frederick Barry, 4,062,235, Cl. 73-159.000.
Woodhead, Peter M. J.: *See—*
Mager, David; Heronemus, William E.; and Woodhead, Peter M. J., 4,062,189, Cl. 60-641.000.
Worley, Arthur C.: *See—*
Blaser, Don E.; and Worley, Arthur C., 4,062,656, Cl. 48-73.000.
Worthington, Ralph Eric: *See—*
Thompson, William Henry; Worthington, Ralph Eric; and Stamper, David John, 4,062,929, Cl. 423-483.000.
Wosmek, Raymond A., to AG Systems, Inc. Apparatus for distributing agricultural ammonia. 4,062,306, Cl. 111-7.000.
Wovcha, Merle G.: *See—*
Antosz, Frederick J.; Haak, Willard J.; and Wovcha, Merle G., 4,062,880, Cl. 260-397.100.
Biggs, Candice B.; Pyke, Thomas R.; and Wovcha, Merle G., 4,062,729, Cl. 195-51.00S.
Wright, John J.; Daniels, Peter J. L.; Mallams, Alan K.; and Nagabhushan, Tattanahalli L., to Schering Corporation. Di-N-alkylaminoglycosides, methods for their manufacture and novel intermediates useful therein, method for their use as antibacterial agents and pharmaceutical compositions useful therefor. 4,062,947, Cl. 424-180.000.
Wright, Julian R. Solvent programmer controller. 4,063,077, Cl. 364-502.000.
Wright, Walter Olden: *See—*
Kemp, Dennis E., Jr.; and Wright, Walter Olden, 4,062,497, Cl. 241-34.000.
Wu, Icheng: *See—*
Lawrence, John E.; and Wu, Icheng, 4,062,102, Cl. 29-572.000.
Wulfekotter, Dedley: *See—*
Power, George Edward; and Wulfekotter, Dedley, 4,062,992, Cl. 428-90.000.
Wust, Toni, to Meyer, Roth & Pastor Maschinenfabrik GmbH. Method and apparatus for the resistance heating of wire pins. 4,063,065, Cl. 219-162.000.
Wyrepak Industries: *See—*
Kovaleski, Joseph J., 4,062,505, Cl. 242-128.000.
Wyse, Stanley Frederick, to Litton Systems, Inc. Dual-gimbal gyroscope flexure suspension. 4,062,600, Cl. 308-2.00A.
Wyszynski, Apolonious: *See—*
James, Barrie Sidney; and Wyszynski, Apolonious, 4,062,739, Cl. 204-50.00Y.
Xerox Corporation: *See—*
Andrus, Paul G.; and Hardenbrook, James M., 4,063,154, Cl. 324-32.000.
Buchheit, Robert F., 4,063,155, Cl. 324-32.000.
Byrne, John Frank, 4,062,658, Cl. 51-281.00R.
Deetz, David R.; and Ogburn, Roy H., 4,062,285, Cl. 101-93.020.
Evans, John Brian, 4,063,183, Cl. 328-163.000.
Goffe, William L., 4,062,680, Cl. 96-1.0PS.
Grushkin, Bernard, 4,062,854, Cl. 260-295.00A.
Metcalfe, Robert M.; Boggs, David R.; Thacker, Charles P.; and Lampson, Butler W., 4,063,220, Cl. 340-147.0LP.
Safford, George J.; and Lentz, James A., 4,062,812, Cl. 252-500.000.
Scifres, Donald R.; Burnham, Robert D.; and Streifer, William, 4,063,189, Cl. 331-94.50H.
Snyder, Jan S.; and Bright, Clark I., 4,063,222, Cl. 365-126.000.
Stange, Klaus K.; Smith, Richard E.; Hamlin, Thomas J.; and Cassano, James R., 4,062,538, Cl. 271-243.000.
Turner, Sam R., 4,062,886, Cl. 560-21.000.
Yabu, Tadahiko: *See—*
Takahara, Ichiro; Yabu, Tadahiko; and Hujita, Jihei, 4,063,286, Cl. 358-128.000.
Yaguchi, Toshiyuki: *See—*
Masuzima, Sho; Yoshida, Shuhei; Yaguchi, Toshiyuki; and Fuchiguchi, Tetsuya, 4,062,719, Cl. 156-502.000.
Yale, Harry L.; and Bristol, James A., to E. R. Squibb & Sons, Inc. Diels-alder adducts of benzoxadiazepines and benzothiadiazepines. 4,062,852, Cl. 260-293.550.
Yale, Harry Louis; and Petigara, Ramesh B., to E. R. Squibb & Sons, Inc. Hydroxy pyrimido compounds. 4,062,846, Cl. 260-256.50R.
Yamada, Arthur S., to TRW Inc. Electroplating drum for relatively large fasteners and the like. 4,062,751, Cl. 204-212.000.
Yamaga, Eiichi; and Aoki, Eiichiro, to Nippon Gakki Seizo Kabushiki Kaisha. Automatic rhythm performing apparatus. 4,062,263, Cl. 84-1.030.

Yamagishi, Haruo, to Tokyo Shibaura Electric Co., Ltd. Method for manufacturing a semiconductor device. 4,062,103, Cl. 29-580.000.
Yamaguti, Masanobu: *See*—
Gondo, Hisashi; Nakasugi, Hajime; Kimura, Turugi; and Yamaguti, Masanobu, 4,062,705, Cl. 148-127.000.
Yamamoto, Masaya: *See*—
Tamai, Tasuo; Osawa, Sadao; Miyatuka, Hajime; and Yamamoto, Masaya, 4,062,789, Cl. 252-62.10L.
Yamanouchi Pharmaceutical Co., Ltd.: *See*—
Murakami, Masuo; Takahashi, Kozo; Murase, Kiyoshi; Mase, Toshiyasu; Ida, Hisashi; and Takenaka, Toichi, 4,063,025, Cl. 560-29.000.
Yamatsu, Isao: *See*—
Kijima, Shizumasa; Yamatsu, Isao; Minami, Norio; and Inai, Yuichi, 4,062,879, Cl. 260-396.00R.
Yanagibori, Masami, to Sony Corporation. Plural band, single/double conversion radio receiver. 4,063,177, Cl. 325-460.000.
Yao, Hsien C.: *See*—
Gandhi, Haren S.; Shelef, Mordecai; Stepien, Henryk K.; and Yao, Hsien C., 4,062,808, Cl. 252-454.000.
Yariv, Amnon: *See*—
Abrams, Richard L.; and Yariv, Amnon, 4,063,195, Cl. 332-7.510.
Yasujima, Nobuo; Itokawa, Natsuo; and Arai, Juichiro, to Taisei Denski Kabushiki Kaisha; and Yasujima, Nobuo. Method for manufacturing stable metal thin film resistors comprising sputtered alloy of tantalum and silicon and product resulting therefrom. 4,063,211, Cl. 338-308.000.
Yatcilla, George: *See*—
Ankenman, Thomas Wayne; and Yatcilla, George, 4,062,280, Cl. 100-19.00A.
Yoerger, William E.: *See*—
Lewis, William C.; Darrow, Robert P.; and Yoerger, William E., 4,062,681, Cl. 96-1.50N.
Yokogawa Electric Works, Ltd.: *See*—
Ohte, Akira; Iwaoka, Hideto; and Araragi, Muneki, 4,063,150, Cl. 324-.50R.
Yokoi, Shigeo: *See*—
Ohnaka, Kouichi; Yokoi, Shigeo; and Ohmiya, Takeo, 4,063,018, Cl. 536-98.000.
Yokozato, Junichi: *See*—
Ando, Yoshikazu; and Yokozato, Junichi, 4,063,264, Cl. 354-286.000.
Yoneda, Yutaka: *See*—
Kawakami, Hideaki; Yoneda, Yutaka; Nagae, Yoshiharu; and Kitazima, Masaaki, 4,062,626, Cl. 350-160.0LC.
Yoneyama, Tsuneo: *See*—
Amemiya, Hiroshi; Tarui, Tadaaki; and Yoneyama, Tsuneo, 4,063,236, Cl. 340-347.0NT.
Yoshida, Hiroshi; Kuwabara, Yoshitaka; and Tsuchida, Hideo, to Nishimatsu Construction Company, Ltd. Method of forcibly introducing a curved steel pipe into the ground and a machine therefor. 4,062,196, Cl. 61-72.700.
Yoshida, Shuhei: *See*—
Masuzima, Sho; Yoshida, Shuhei; Yaguchi, Toshiyuki; and Fuchiguchi, Tetsuya, 4,062,719, Cl. 156-502.000.
Yoshida, Tokuzo: *See*—
Yoshida, Toru; Hosoi, Kameo; Yoshida, Tokuzo; Shimizu, Kazuyuki; and Nakagawa, Koithiro, 4,062,129, Cl. 34-80.000.
Yoshida, Toru; Hosoi, Kameo; Yoshida, Tokuzo; Shimizu, Kazuyuki; and Nakagawa, Koithiro, to Takasago Thermal Engineering Co., Ltd.; and Nippon Steel Corporation. Arrangement for preparing hot compressed air of reduced moisture content suitable for use in operation of blast furnace. 4,062,129, Cl. 34-80.000.
Yoshihashi, Akira: *See*—
Satsumabayashi, Kazuyoshi; Yoshihashi, Akira; Kato, Takeshi; and Omote, Osamu, 4,062,550, Cl. 277-92.000.
Yoshimoto, Takeo; Igarashi, Keiichi; Harayama, Takeo; Ura, Masaaki; Toyama, Teruhiko; Morikawa, Osamu; Takasawa, Yoshio; and Hojo, Yoshikata, to Mitsui Toatsu Chemicals, Incorporated. Nitro-diphenyl ethers. 4,062,896, Cl. 260-613.00R.
Yoshimura, Susumu: *See*—
Tamada, Yuzuru; and Yoshimura, Susumu, 4,062,092, Cl. 24-241.0SB.
Yoshizawa, Toshio: *See*—
Kato, Takashi; Yoshizawa, Toshio; Suzuki, Yoshihisa; and Ueda, Shozo, 4,062,439, Cl. 198-470.000.
Youmans, Donald W., to FMC Corporation. Truck construction. 4,062,582, Cl. 296-28.00C.
Young, John M.: *See*—
Odell, Alexander D.; Young, John M.; and Arton, Kenneth A. M., 4,063,119, Cl. 307-279.000.
Young, Peter L., to Corning Glass Works. Method of forming a thin film capacitor with a manganese dioxide layer. 4,062,749, Cl. 204-192.0SP.
Young, Rodney Christopher: *See*—
Ganellin, Charon Robin; and Young, Rodney Christopher, 4,062,863, Cl. 424-273.00R.
Yu, Herbert Chia-Chen: *See*—
Peng, Luke Shih-Cheng; and Yu, Herbert Chia-Chen, 4,062,555, Cl. 280-42.000.
Yu, Liang-Tse: *See*—
Buvet, Rene; Vallot, Roger; Messina, Richard; Gal, Jacques; and Yu, Liang-Tse, 4,062,745, Cl. 204-131.000.
Yukinaga, Hisajiro; Sumimoto, Shinzaburo; Ishizuka, Ichiro; and Sugita, Jitsuo, to Shionogi & Co., Ltd. 3-Isoxazolylurea derivatives. 4,062,861, Cl. 260-307.00H.
Zable, Jack Louis: *See*—
Jensen, Donald Frederick; Tamulis, John Carl; Tomasky, Thomas; and Zable, Jack Louis, 4,063,252, Cl. 346-75.000.
Zanasi, Luciano, to Zanasi Nigris S.p.A. Method and apparatus for the dosing of dense pasty substances. 4,062,386, Cl. 141-258.000.
Zanasi Nigris S.p.A.: *See*—
Zanasi, Luciano, 4,062,386, Cl. 141-258.000.
Zappia, Anthony T., to Ball Packaging Products, Inc. Apparatus for arc movement of the parison. 4,062,668, Cl. 65-229.000.
Zawadzki, Bohdan; Bulinska, Anna; Szulc, Zenon; Lonski, Ryszard; and Brzoskowski, Zbigniew. Method of production of anhydrous hydrogen fluoride. 4,062,930, Cl. 423-483.000.
Zeleney, Leo Z., to Nucleus Corporation. Brake tester. 4,062,224, Cl. 73-39.000.
Zenith Radio Corporation: *See*—
Tanaka, Akio, 4,063,178, Cl. 325-464.000.
Zenza Bronica Industries, Inc.: *See*—
Ando, Yoshikazu; and Yokozato, Junichi, 4,063,264, Cl. 354-286.000.
Ziegler, Karl, deceased (by Martin, Heinz); Breil, Heinz; Holzkamp, Erhard; and Martin, Heinz, to Studiengesellschaft Kohle m.b.H. Polymerization of ethylenically unsaturated hydrocarbons. 4,063,009, Cl. 526-159.000.
Zimmer, Franklin V.: *See*—
Brewer, William E.; and Zimmer, Franklin V., 4,062,195, Cl. 61-72.400.
Zimmerman, John Aaron, Jr.: *See*—
Shaffer, Howard Richard; and Zimmerman, John Aaron, Jr., 4,062,616, Cl. 339-99.00R.
Zlochower, Isaac A., to PPG Industries, Inc. Method of preparing acid resistant glass fibers. 4,063,001, Cl. 428-410.000.
Zollman, Herbert T., to Eastman Kodak Company. Colored cyanoacrylate adhesive compositions. 4,062,827, Cl. 260-42.210.
Zugcic, Joseph P.; and Whiting, Kevin, to American Can Company. System for forming and trimming of tubular articles. 4,062,311, Cl. 113-7.00R.
Zuntini, Franco: *See*—
Meyer, Andre R.; Losi, Salvatore; Marka, Erwin; Rudio, Jacques; and Zuntini, Franco, 4,062,736, Cl. 204-43.00G.
Zurcher, Jean-Frederic. Detection circuit for significant peaks of speech signals. 4,063,030, Cl. 179-1.0SC.
Zurcher, Rudolf F., to Hughes Aircraft Company. Combination watch-calculator construction. 4,062,181, Cl. 58-152.00R.

LIST OF REISSUE PATENTEES

TO WHOM

PATENTS WERE ISSUED ON THE 13TH DAY OF DECEMBER, 1977

NOTE.—Arranged in accordance with the first significant character or word of the name (in accordance with city and telephone directory practice).

Calzificio Fratelli Protasoni Societa' di fatto di Mario e Trento Protasoni: *See*—
Rosso, Pietro, Re. 29,492, Cl. 112-25.000.
Crump, Desmond George, to Phido (Wire Services) Co., Ltd. Cable cleaning units. Re. 29,493, Cl. 134-172.000.
Georgi, Donald K., to Graco Inc. Apparatus and method for a metering system. Re. 29,495, Cl. 222-1.000.
Graco Inc.: *See*—
Georgi, Donald K., Re. 29,495, Cl. 222-1.000.
Hodge, Allan M. Trash container lid system. Re. 29,494, Cl. 220-334.000.
Phido (Wire Services) Co., Ltd.: *See*—
Crump, Desmond George, Re. 29,493, Cl. 134-172.000.
Rosso, Pietro, to Rosso Pietro & C. S.p.A.; and Calzificio Fratelli Protasoni Societa' di fatto di Mario e Trento Protasoni. Fixing binding strips to knitwear on linking machines. Re. 29,492, Cl. 112-25.000.
Rosso Pietro & C. S.p.A.: *See*—
Rosso, Pietro, Re. 29,492, Cl. 112-25.000.
Snow, Helen E.: *See*—
Snow, Henry A., Re. 29,491, Cl. 51-309.00R.
Snow, Henry A., to Snow, Helen E. Method of making a cable-type saw. Re. 29,491, Cl. 51-309.00R.

LIST OF PLANT PATENTEES

Ecke, Paul, Jr.: *See*—
Hegg, Thormod, 4,164, Cl. 86.000.
Hegg, Thormod, to Ecke, Paul, Jr. Poinsettia plant. 4,164, 12-13-77, Cl. 86.000.
Langvad, Bjarne Johan, deceased (by Langvad, Brita, administratrix), to W. Weibull AB. Bluegrass plant. 4,165, 12-13-77, Cl. 88.000.
Langvad, Brita, administratrix: *See*—
Langvad, Bjarne Johan, deceased, 4,165, Cl. 88.000.
W. Weibull AB: *See*—
Langvad, Bjarne Johan, deceased, 4,165, Cl. 88.000.
Zaiger, Chris Floyd. Peach tree. 4,163, 12-13-77, Cl. 43.000.

LIST OF DESIGN PATENTEES

A. B. Chance Company: *See*—
Lewis, Paul E.; and Clark, Daren A., 246,646, Cl. D13-17.000.
American Optical Corporation: *See*—
Canavan, Richard W., III, 246,654, Cl. D16-65.000.
Johnsen, David W., 246,656, Cl. D16-65.000.
Amper S.A.: *See*—
Peral-Hernandez, Antonio, 246,650, Cl. D14-53.000.
Becker, Frederick R., III, to Metropolitan Wire Corporation. Corner bumper. 246,625, 12-13-77, Cl. D6-191.000.
Becker, Robert W.: *See*—
Boldt, Melvin H.; Morrison, Thurber H.; and Becker, Robert W., 246,635, Cl. D10-106.000.
Ben's Incorporated: *See*—
Kawade, Yoshimitsu, 246,624, Cl. D6-108.000.
Kawade, Yoshimitsu, 246,637, Cl. D11-149.000.
Bifano, Anthony T. Fishing lure. 246,664, 12-13-77, Cl. D22-27.000.
Bixler, Loring C.; Davis, Myron F.; Eisenman, Francis J., Jr.; and Wiener, Edward R., to International Business Machines Corporation. Data processing ensemble or similar article. 246,670, 12-13-77, Cl. D14-44.000.
Boldt, Melvin H.; Morrison, Thurber H.; and Becker, Robert W., to National Presto Industries, Inc. Wall-mounted smoke detector. 246,635, 12-13-77, Cl. D10-106.000.
Boyd, Richard Sidney: *See*—
Ortega, Charles J.; and Boyd, Richard Sidney, 246,658, Cl. D19-56.000.
Braaten, Ronald J., to Linemaster Switch Corporation, The. Foot operated control unit. 246,648, 12-13-77, Cl. D13-36.000.
Braaten, Ronald J., to Linemaster Switch Corporation, The. Foot operated control unit. 246,649, 12-13-77, Cl. D13-36.000.
Bridgestone Tire Company Limited: *See*—
Matsuda, Kazuo; and Kojima, Hiroshi, 246,640, Cl. D12-141.000.
Matsuda, Kazuo; and Kojima, Hiroshi, 246,641, Cl. D12-141.000.
Matsuda, Kazuo; and Kojima, Hiroshi, 246,642, Cl. D12-141.000.
Bruce Plastics, Inc.: *See*—
Szabo, Bela G., 246,631, Cl. D8-306.000.
Budd, Robert J., to Homac Mfg. Company. Electrical insulating sleeve. 246,647, 12-13-77, Cl. D13-17.000.
Burns, Robert L.; and McCown, Barry. Boat deck. 246,639, 12-13-77, Cl. D12-70.000.
Canavan, Richard W., III, to American Optical Corporation. Pair of spectacles. 246,654, 12-13-77, Cl. D16-65.000.
Cecchetti, Claudio. Table for a soccer game. 246,674, 12-13-77, Cl. D34-5.0SS.
Cerniway, Leon A. Mouthpiece block for underwater breathing apparatus. 246,671, 12-13-77, Cl. D29-7.000.
Chuen, Lo Lin, to Glovemakers, Inc. Tool portfolio, or similar article. 246,679, 12-13-77, Cl. D87-1.00R.
Clark, Daren A.: *See*—
Lewis, Paul E.; and Clark, Daren A., 246,646, Cl. D13-17.000.
Combi Co., Ltd.: *See*—
Nakao, Shinroku, 246,676, Cl. D34-15.0AN.
Cone, Richard E. Attachable emblem for jewelry. 246,636, 12-13-77, Cl. D11-89.000.
Daiwa Seiko, Inc.: *See*—
Okada, Kiyoshi, 246,662, Cl. D22-25.000.
Davis, Myron F.: *See*—
Bixler, Loring C.; Davis, Myron F.; Eisenman, Francis J., Jr.; and Wiener, Edward R., 246,670, Cl. D14-44.000.
Dranger, Jan; and Huldt, Johan, to Innovator Design AB. Chair. 246,620, 12-13-77, Cl. D6-47.000.
Dranger, Jan; and Huldt, Johan, to Innovator Design AB. Sofa. 246,622, 12-13-77, Cl. D6-63.000.
Eisenman, Francis J., Jr.: *See*—
Bixler, Loring C.; Davis, Myron F.; Eisenman, Francis J., Jr.; and Wiener, Edward R., 246,670, Cl. D14-44.000.
Engblom, Kenneth D. Fishing rod holder. 246,661, 12-13-77, Cl. D22-13.000.
Establissements Lagesse et Neymarc: *See*—
Neymarc, Guy, 246,675, Cl. D34-5.0BB.
Glovemakers, Inc.: *See*—
Chuen, Lo Lin, 246,679, Cl. D87-1.00R.
Gulley, Don R.; and Schad, Theodore G., Jr., to Lou Ana Foods, Inc. Bottle. 246,632, 12-13-77, Cl. D9-42.000.
Hanson, Thomas E.; and Martin, Daniel A., to SCM Corporation. Steam iron. 246,628, 12-13-77, Cl. D7-202.000.
Hanson, Thomas E.; and McVicker, Harry J., to SCM Corporation. Steam iron. 246,629, 12-13-77, Cl. D7-202.000.
Hayes, William H. Electrician's combination tool. 246,630, 12-13-77, Cl. D8-58.000.
Hegedus, Michael Byron. Bicycle ramp. 246,638, 12-13-77, Cl. D12-53.000.
Homac Mfg. Company: *See*—
Budd, Robert J., 246,647, Cl. D13-17.000.
Huldt, Johan: *See*—
Dranger, Jan; and Huldt, Johan, 246,620, Cl. D6-47.000.
Dranger, Jan; and Huldt, Johan, 246,622, Cl. D6-63.000.

Innovator Design AB: *See*—
Dranger, Jan; and Huldt, Johan, 246,620, Cl. D6-47.000.
Dranger, Jan; and Huldt, Johan, 246,622, Cl. D6-63.000.
International Business Machines Corporation: *See*—
Bixler, Loring C.; Davis, Myron F.; Eisenman, Francis J., Jr.; and Wiener, Edward R., 246,670, Cl. D14-44.000.
Johnsen, David W., to American Optical Corporation. Pair of spectacles. 246,656, 12-13-77, Cl. D16-65.000.
Johnson, Allan B.: *See*—
Mackay, Frederick G.; Mackay, Spencer L.; and Johnson, Allan B., 246,667, Cl. D24-15.000.
Mackay, Frederick G.; Mackay, Spencer L.; and Johnson, Allan B., 246,668, Cl. D24-15.000.
Johnson, Robert H. Combined cabinet and speaker housing. 246,618, 12-13-77, Cl. D6-4.000.
Kawade, Yoshimitsu, to Ben's Incorporated. Pair of book ends. 246,624, 12-13-77, Cl. D6-108.000.
Kawade, Yoshimitsu, to Ben's Incorporated. Container to be used as a vase, mug, or the like. 246,637, 12-13-77, Cl. D11-149.000.
Kojima, Hiroshi: *See*—
Matsuda, Kazuo; and Kojima, Hiroshi, 246,640, Cl. D12-141.000.
Matsuda, Kazuo; and Kojima, Hiroshi, 246,641, Cl. D12-141.000.
Matsuda, Kazuo; and Kojima, Hiroshi, 246,642, Cl. D12-141.000.
Lap, Yiu Chung. Fluorescent lamp. 246,678, 12-13-77, Cl. D48-24.00R.
Levitt, Richard. Confection dispenser. 246,634, 12-13-77, Cl. D9-224.000.
Lewis, Paul E.; and Clark, Daren A., to A. B. Chance Company. Cloverleaf insulator assembly. 246,646, 12-13-77, Cl. D13-17.000.
Linemaster Switch Corporation, The: *See*—
Braaten, Ronald J., 246,648, Cl. D13-36.000.
Braaten, Ronald J., 246,649, Cl. D13-36.000.
Lou Ana Foods, Inc.: *See*—
Gulley, Don R.; and Schad, Theodore G., Jr., 246,632, Cl. D9-42.000.
Lund, Ida Marie. Doll figure. 246,673, 12-13-77, Cl. D34-4.00A.
Mackay, Frederick G.; Mackay, Spencer L.; and Johnson, Allan B., to Teledyne Industries, Inc. Motor pump housing for a dental irrigator. 246,667, 12-13-77, Cl. D24-15.000.
Mackay, Frederick G.; Mackay, Spencer L.; and Johnson, Allan B., to Teledyne Industries, Inc. Motor pump housing for a dental jet irrigator and cover therefor. 246,668, 12-13-77, Cl. D24-15.000.
Mackay, Spencer L.: *See*—
Mackay, Frederick G.; Mackay, Spencer L.; and Johnson, Allan B., 246,667, Cl. D24-15.000.
Mackay, Frederick G.; Mackay, Spencer L.; and Johnson, Allan B., 246,668, Cl. D24-15.000.
Makita, Seiichi, to Noritake Co., Limited (Nippon Toki Kabushiki Kaisha). Plate or similar article. 246,619, 12-13-77, Cl. D7-24.000.
Manifattura Armi Perazzi S.p.A.: *See*—
Mattarelli, Ennio, 246,660, Cl. D22-8.000.
Martin, Daniel A.: *See*—
Hanson, Thomas E.; and Martin, Daniel A., 246,628, Cl. D7-202.000.
Marvin Glass & Associates: *See*—
Morrison, Howard J.; and Montague, Douglas P., 246,651, Cl. D14-53.000.
Matsuda, Kazuo; and Kojima, Hiroshi, to Bridgestone Tire Company Limited. Vehicle tire. 246,640, 12-13-77, Cl. D12-141.000.
Matsuda, Kazuo; and Kojima, Hiroshi, to Bridgestone Tire Company Limited. Vehicle tire. 246,641, 12-13-77, Cl. D12-141.000.
Matsuda, Kazuo; and Kojima, Hiroshi, to Bridgestone Tire Company Limited. Vehicle tire. 246,642, 12-13-77, Cl. D12-141.000.
Mattarelli, Ennio, to Manifattura Armi Perazzi S.p.A. Top barrel for guns. 246,660, 12-13-77, Cl. D22-8.000.
McCarroll, Raymond A. Window vent. 246,644, 12-13-77, Cl. D12-181.000.
McCown, Barry: *See*—
Burns, Robert L.; and McCown, Barry, 246,639, Cl. D12-70.000.
McVicker, Harry J.: *See*—
Hanson, Thomas E.; and McVicker, Harry J., 246,629, Cl. D7-202.000.
Mende, Jerome. Combined eyeglass holder and desk set base. 246,657, 12-13-77, Cl. D16-82.000.
Metropolitan Wire Corporation: *See*—
Becker, Frederick R., III, 246,625, Cl. D6-191.000.
Minolta Camera Kabushiki Kaisha: *See*—
Ooya, Tetsuro; and Takechi, Keiji, 246,652, Cl. D16-06.000.
Mohar, Martin: *See*—
Van Horn, Robert; and Mohar, Martin, 246,655, Cl. D16-65.000.
Montague, Douglas P.: *See*—
Morrison, Howard J.; and Montague, Douglas P., 246,651, Cl. D14-53.000.
Montes, Verissimo M. Jacket. 246,616, 12-13-77, Cl. D2-206.000.
Morrison, Howard J.; and Montague, Douglas P., to Marvin Glass & Associates. Telephone. 246,651, 12-13-77, Cl. D14-53.000.
Morrison, Thurber H.: *See*—
Boldt, Melvin H.; Morrison, Thurber H.; and Becker, Robert W., 246,635, Cl. D10-106.000.
Nakao, Shinroku, to Combi Co., Ltd. Toy vehicle. 246,676, 12-13-77, Cl. D34-15.0AN.
National Presto Industries, Inc.: *See*—
Boldt, Melvin H.; Morrison, Thurber H.; and Becker, Robert W., 246,635, Cl. D10-106.000.
Neymarc, Guy, to Establissements Lagesse et Neymarc. Bowling course. 246,675, 12-13-77, Cl. D34-5.0BB.
Nigg, Georg. Projector kit for cinema and television exteriors. 246,677, 12-13-77, Cl. D48-20.00K.
Nippon Kogaku K.K.: *See*—
Tomatsuri, Masakazu, 246,653, Cl. D16-59.000.
Noritake Co., Limited (Nippon Toki Kabushiki Kaisha): *See*—
Makita, Seiichi, 246,619, Cl. D7-24.000.
Okada, Kiyoshi, to Daiwa Seiko, Inc. Fishing reel. 246,662, 12-13-77, Cl. D22-25.000.
Ooya, Tetsuro; and Takechi, Keiji, to Minolta Camera Kabushiki Kaisha. Camera or similar article. 246,652, 12-13-77, Cl. D16-06.000.
Ortega, Charles J.; and Boyd, Richard Sidney, to Pentel Kabushiki Kaisha. Clip for a writing instrument or similar article. 246,658, 12-13-77, Cl. D19-56.000.
Pentel Kabushiki Kaisha: *See*—
Ortega, Charles J.; and Boyd, Richard Sidney, 246,658, Cl. D19-56.000.
Peral-Hernandez, Antonio, to Amper S.A. Push button telephone. 246,650, 12-13-77, Cl. D14-53.000.
Petty, Preston L. Cycle fender. 246,645, 12-13-77, Cl. D12-186.000.
Robins, Bert T. Display stand for shock absorbers, tires or the like. 246,623, 12-13-77, Cl. D6-85.000.
S.I.A.T. Societa' Internazionale Applicazioni Tecniche S.p.A.: *See*—
Vailati, Luigi Secondo, 246,659, Cl. D19-69.000.
Sabol, Alma J. Carrying bag. 246,680, 12-13-77, Cl. D87-3.00F.
Scepter Manufacturing Company Limited: *See*—
Torokvei, Thomas Evald, 246,633, Cl. D9-179.000.
Schad, Theodore G., Jr.: *See*—
Gulley, Don R.; and Schad, Theodore G., Jr., 246,632, Cl. D9-42.000.
Schlichting, Harold E., Jr. Biological monitoring chamber. 246,666, 12-13-77, Cl. D24-8.000.
SCM Corporation: *See*—
Hanson, Thomas E.; and Martin, Daniel A., 246,628, Cl. D7-202.000.
Hanson, Thomas E.; and McVicker, Harry J., 246,629, Cl. D7-202.000.
Shenk, Seymour. Pillow. 246,626, 12-13-77, Cl. D6-201.000.
Shumway, Chester A. Vehicle hitching device. 246,643, 12-13-77, Cl. D12-162.000.
Sing, Jack T. Multi-purpose fisherman's tool, or similar article. 246,663, 12-13-77, Cl. D22-31.000.
Spears, Michael B. Restaurant building. 246,669, 12-13-77, Cl. D25-19.000.
Sugiyama, Hirohisa. Roasting pan. 246,627, 12-13-77, Cl. D7-85.000.
Szabo, Bela G., to Bruce Plastics, Inc. Luggage handle. 246,631, 12-13-77, Cl. D8-306.000.
Takechi, Keiji: *See*—
Ooya, Tetsuro; and Takechi, Keiji, 246,652, Cl. D16-06.000.
Taylor, John S. Flea scoop for an animal grooming comb. 246,672, 12-13-77, Cl. D30-40.000.
Teledyne Industries, Inc.: *See*—
Mackay, Frederick G.; Mackay, Spencer L.; and Johnson, Allan B., 246,667, Cl. D24-15.000.
Mackay, Frederick G.; Mackay, Spencer L.; and Johnson, Allan B., 246,668, Cl. D24-15.000.
Tomatsuri, Masakazu, to Nippon Kogaku K.K. Binoculars. 246,653, 12-13-77, Cl. D16-59.000.
Tomlin, Chester C., Jr. Hat band. 246,617, 12-13-77, Cl. D2-250.000.
Torokvei, Thomas Evald, to Scepter Manufacturing Company Limited. Bottle carrier. 246,633, 12-13-77, Cl. D9-179.000.
Updegrave, William J. Dental radiographic apparatus for forming and confining an X-ray beam. 246,665, 12-13-77, Cl. D24-2.000.
Vailati, Luigi Secondo, to S.I.A.T. Societa' Internazionale Applicazioni Tecniche S.p.A. Tape dispenser. 246,659, 12-13-77, Cl. D19-69.000.
Van Horn, Robert; and Mohar, Martin. Golf training glasses. 246,655, 12-13-77, Cl. D16-65.000.
Voorhees, Robert Francis, Jr. Rocking chair. 246,621, 12-13-77, Cl. D6-49.000.
Wiener, Edward R.: *See*—
Bixler, Loring C.; Davis, Myron F.; Eisenman, Francis J., Jr.; and Wiener, Edward R., 246,670, Cl. D14-44.000.

CLASSIFICATION OF PATENTS

ISSUED DECEMBER 13, 1977

NOTE.—First number, class; second number, subclass; third number, patent number

CLASS 2	
16	4,062,073
105	4,062,062
187	4,062,063
252	4,062,064
271	4,062,065
322	4,062,066
410	4,062,067
421	4,062,068
CLASS 4	
1	4,062,069
	4,062,070
7	4,062,071
	4,062,072
CLASS 5	
63	4,062,074
	4,062,075
334 R	4,062,076
365	4,062,077
CLASS 7	
1 R	4,062,078
CLASS 8	
1 A	4,062,643
1 UA	4,062,642
2.5 A	4,062,644
41 B	4,062,645
137	4,062,647
CLASS 9	
332	4,062,079
CLASS 10	
76 T	4,062,080
CLASS 13	
6	4,063,027
35	4,063,028
CLASS 14	
1	4,062,081
CLASS 15	
28	4,062,082
106	4,062,083
169	4,062,084
339	4,062,085
CLASS 21	
56	4,062,646
CLASS 23	
230 R	4,062,649
232 E	4,062,650
253 PC	4,062,651
253 R	4,062,652
273 V	4,062,653
288 A	4,062,654
CLASS 24	
20 EE	4,062,086
73 HR	4,062,088
84 R	4,062,087
97	4,062,089
205.11 L	4,062,090
230 R	4,062,091
241 SB	4,062,092
CLASS 26	
2 R	4,062,093
75	4,062,094
CLASS 29	
113 AD	4,062,096
116 AD	4,062,097
123	4,062,098
415	4,062,099
427	4,062,100
451	4,062,101
572	4,062,102
580	4,062,103
592 R	4,062,104
594	4,062,105
628	4,062,106
	4,062,107
802	4,062,095
809	4,062,108
CLASS 30	
28	4,062,109
90.8	4,062,110
139	4,062,111
228	4,062,112
260	4,062,113
276	4,062,114
	4,062,115
292	4,062,116
317	4,062,117
339	4,062,118
CLASS 32	
10 A	4,062,119
CLASS 33	
166	4,062,120
169 R	4,062,121
	4,062,122
174 G	4,062,123
174 Q	4,062,124
179.5 D	4,062,125
236	4,062,126
CLASS 34	
1	4,062,127
57 R	4,062,128
80	4,062,129
CLASS 35	
13	4,062,130
CLASS 36	
44	4,062,131
100	4,062,132
120	4,062,133
132	4,062,134
CLASS 37	
43 R	4,062,135
126 AE	4,062,136
CLASS 40	
19.5	4,062,137
124.1	4,062,138
129 C	4,062,139
152	4,062,140
CLASS 43	
3	4,062,141
61	4,062,142
CLASS 44	
6	4,062,655
CLASS 46	
	4,062,143
151	4,062,144
CLASS 47	
9	4,062,145
17	4,062,146
71	4,062,147
76	4,062,148
CLASS 48	
73	4,062,656
77	4,062,657
CLASS 49	
49	4,062,149
CLASS 51	
5 D	4,062,150
34 D	4,062,151
170 R	4,062,152
207	4,062,153
281 R	4,062,658
	4,062,659
295	4,062,660
309 R	Re.29,491
319	4,062,154
412	4,062,155
CLASS 52	
71	4,062,158
111	4,062,156
173 DS	4,062,157
421	4,062,159
445	4,062,160
461	4,062,161
481	4,062,162
	4,062,163
489	4,062,164
514	4,062,165
664	4,062,166
693	4,062,167
CLASS 53	
64	4,062,168
124 D	4,062,169
390	4,062,170
CLASS 55	
190	4,062,661
206	4,062,662
238	4,062,663
319	4,062,664
CLASS 56	
295	4,062,171
343	4,062,172
370	4,062,173
	4,062,174
CLASS 57	
36	4,062,175
77.3	4,062,176
140 BY	4,062,177
CLASS 58	
23 R	4,062,178
	4,062,179
145 D	4,062,180
152 R	4,062,181
CLASS 60	
39.09 F	4,062,183
39.28 P	4,062,184
39.65	4,062,182
204	4,062,185
226 R	4,062,186
326	4,062,187
599	4,062,188
641	4,062,189
682	4,062,190
CLASS 61	
1 F	4,062,191
1 R	4,062,192
45 D	4,062,194
72.4	4,062,195
72.7	4,062,196
112	4,062,198
CLASS 62	
101	4,062,197
197	4,062,199
320	4,062,200
353	4,062,201
380	4,062,202
CLASS 64	
29	4,062,203
CLASS 65	
3 A	4,062,665
99 A	4,062,666
135	4,062,667
229	4,062,668
CLASS 66	
196	4,062,204
CLASS 68	
13 A	4,062,205
CLASS 70	
14	4,062,206
18	4,062,193
68	4,062,207
178	4,062,208
226	4,062,209
268	4,062,210
366	4,062,211
456 B	4,062,212
CLASS 71	
86	4,062,669
88	4,062,670
92	4,062,671
CLASS 72	
24	4,062,213
34	4,062,214
62	4,062,215
128	4,062,216
391	4,062,217
409	4,062,218
422	4,062,219
CLASS 73	
3	4,062,220
11	4,062,221
13	4,062,222
27 R	4,062,223
39	4,062,224
60	4,062,225
63	4,062,226
74	4,062,228
88 F	4,062,229
114	4,062,230
116	4,062,231
117.2	4,062,232
135	4,062,233
	4,062,234
159	4,062,235
190 CV	4,062,236
194 A	4,062,237
194 VS	4,062,238
343 R	4,062,239
422 GC	4,062,240
432 R	4,062,241
462	4,062,242
630	4,062,227
CLASS 74	
10.8	4,062,243
54	4,062,244
81	4,062,245
88	4,062,246
89	4,062,247
217 R	4,062,248
414	4,062,249
415	4,062,250
501 R	4,062,251
801	4,062,252
CLASS 75	
30	4,062,672
40	4,062,673
61	4,062,674
82	4,062,675
165	4,062,676
176	4,062,677
228	4,062,678
245	4,062,679
CLASS 76	
25 A	4,062,253
CLASS 81	
57.38	4,062,254
CLASS 82	
17	4,062,256
45	4,062,255
CLASS 83	
110	4,062,257
161	4,062,258
285	4,062,259
404.3	4,062,260
414	4,062,261
717	4,062,262
CLASS 84	
1.03	4,062,263
1.24	4,062,264
312 R	4,062,265
CLASS 89	
7	4,062,266
41 E	4,062,267
CLASS 91	
165	4,062,268
400	4,062,269
CLASS 93	
1.1	4,062,270
33·H	4,062,271
CLASS 96	
1 PS	4,062,680
1.5 N	4,062,681
29 L	4,062,682
56.5	4,062,683
60 R	4,062,684
88	4,062,685
115 R	4,062,686
CLASS 98	
2.12	4,062,272
8	4,062,273
115 R	4,062,274
CLASS 99	
393	4,062,275
467	4,062,276
483	4,062,277
CLASS 100	
4	4,062,278
5	4,062,279
19 A	4,062,280
35	4,062,281
53	4,062,282
218	4,062,283
289	4,062,284
CLASS 101	
93.02	4,062,285
375	4,062,286
CLASS 102	
39	4,062,287
	4,062,288
48	4,062,289
70.2 R	4,062,290
CLASS 104	
10	4,062,291
12	4,062,292
113	4,062,293
149	4,062,294
279	4,062,295
CLASS 105	
163 R	4,062,296
480	4,062,297
482	4,062,298
CLASS 106	
15 FP	4,062,687
20	4,062,688
50	4,062,689
98	4,062,690
100	4,062,691
300	4,062,692
308 Q	4,062,693
309	4,062,694
CLASS 108	
42	4,062,299
53.5	4,062,300
56.1	4,062,301
60	4,062,302
CLASS 109	
29	4,062,303
CLASS 110	
8 R	4,062,304
CLASS 111	
1	4,062,305
7	4,062,306
CLASS 112	
	4,062,307
25	Re.29,492
79 A	4,062,308
121.15	4,062,309
280	4,062,310
CLASS 113	
7 R	4,062,311
120 A	4,062,312
CLASS 114	
265	4,062,313
CLASS 116	
85	4,062,314
124.2 A	4,062,315
136.5	4,062,316
171	4,062,317
CLASS 118	
49	4,062,318
49.1	4,062,319
239	4,062,320
623	4,062,321
CLASS 119	
27	4,062,322
146	4,062,323
CLASS 122	
145	4,062,324
225 R	4,062,325
CLASS 123	
8.09	4,062,326
25 C	4,062,338
25 R	4,062,327
32 EL	4,062,328
41.12	4,062,329
44 R	4,062,330
73 B	4,062,331
97 B	4,062,332
119 C	4,062,333
122 AB	4,062,334
139 AF	4,062,336
139 AP	4,062,335
140 MC	4,062,337
CLASS 124	
35 A	4,062,339
CLASS 126	
25 R	4,062,340
41 R	4,062,341
59.5	4,062,342
91 A	4,062,343
120	4,062,344
121	4,062,345
270	4,062,346
	4,062,347
	4,062,348
271	4,062,349
	4,062,350
	4,062,351
	4,062,352
CLASS 127	
9	4,062,695
CLASS 128	
1.1	4,062,353
2 R	4,062,354
2 S	4,062,355
142.2	4,062,356
146	4,062,357
208	4,062,358
212	4,062,359
276	4,062,360
283	4,062,361
287	4,062,362
349 R	4,062,363
405	4,062,364
422	4,062,365
CLASS 130	
27 F	4,062,366
CLASS 131	
134	4,062,367
265	4,062,368
CLASS 134	
1	4,062,696
10	4,062,697
172	Re.29,493
CLASS 135	
19.5	4,062,369
33 C	4,062,370
66	4,062,371
	4,062,372
CLASS 136	
89 PC	4,062,698
CLASS 137	
3	4,062,373
115	4,062,374
296	4,062,375
312	4,062,376
523	4,062,377
535	4,062,378
565	4,062,379
CLASS 138	
122	4,062,380
CLASS 139	
224 A	4,062,381
448	4,062,382
CLASS 140	
93 A	4,062,383
CLASS 141	
46	4,062,384
89	4,062,385
258	4,062,386
337	4,062,387

CLASS 144
32 R 4,062,388
4,062,389
134 D 4,062,390
251 A 4,062,391

CLASS 148
1.5 4,062,699
12.1 4,062,701
12.3 4,062,700
14 4,062,702
26 4,062,703
32 4,062,704
127 4,062,705
175 4,062,706
187 4,062,707

CLASS 149
19.3 4,062,709
35 4,062,708

CLASS 150
1.7 4,062,392

CLASS 152
361 R 4,062,393

CLASS 156
187 4,062,710
244 4,062,711
4,062,712
256 4,062,713
304 4,062,714
334 4,062,715
361 4,062,716
425 4,062,717
498 4,062,718
502 4,062,719
643 4,062,720

CLASS 160
172 4,062,394

CLASS 162
101 4,062,721
234 4,062,722

CLASS 164
9 4,062,395
15 4,062,396
337 4,062,398
338 M 4,062,399
415 4,062,397

CLASS 165
2 4,062,400
125 4,062,401

CLASS 166
.6 4,062,402
156 4,062,403
259 4,062,404
272 4,062,405
323 4,062,406

CLASS 169
47 4,062,407

CLASS 172
9 4,062,539
123 4,062,408
708 4,062,410

CLASS 173
115 4,062,411

CLASS 175
57 4,062,412

CLASS 176
30 4,062,723
38 4,062,724
86 R 4,062,725
87 4,062,726

CLASS 177
122 4,062,413
145 4,062,414
208 4,062,415
210 EM 4,062,416
212 4,062,417

CLASS 178
17.5 4,063,029

CLASS 179
1 GQ 4,063,032
1 J 4,063,034
1 P 4,063,031
4,063,033
1 SC 4,063,030
1 SP 4,063,035
6.3 R 4,063,036
7.1 R 4,063,037
15 A 4,063,040
15 BA 4,063,038
15 BT 4,063,039
4,063,042
15 BV 4,063,041
18 EA 4,063,043
81 C 4,063,044
84 R 4,063,045
90 K 4,063,046
99 4,063,047
107 R 4,063,048
110 A 4,063,049
111 E 4,063,050

CLASS 180
8 A 4,062,418
65 A 4,062,421
70 R 4,062,419
89.1 4,062,420

CLASS 181
198 4,062,422

CLASS 182
129 4,062,423

CLASS 184
65 4,062,424
105 A 4,062,425

CLASS 188
1 B 4,062,426
18 A 4,062,427
275 4,062,428

CLASS 190
18 A 4,062,429

CLASS 191
12 R 4,062,430

CLASS 192
3.33 4,062,431
58 B 4,062,432
104 R 4,062,433

CLASS 193
34 4,062,434

CLASS 194
54 4,062,435

CLASS 195
28 R 4,062,727
31 R 4,062,728
51 S 4,062,729
62 4,062,730
4,062,731
66 R 4,062,732
103.7 4,062,733

CLASS 197
82 4,062,436

CLASS 198
344 4,062,437
425 4,062,438
470 4,062,439
478 4,062,440
480 4,062,441
502 4,062,442
619 4,062,443
648 4,062,444

CLASS 200
61.13 4,063,051
61.46 4,063,052
83 Y 4,063,057
148 R 4,063,053
159 R 4,063,054
308 4,063,055
332 4,063,056

CLASS 202
236 4,062,734

CLASS 203
10 4,062,735

CLASS 204
43 G 4,062,736
43 R 4,062,737
49 4,062,738
50 Y 4,062,739
51 4,062,740
4,062,741
55 R 4,062,742
98 4,062,743
106 4,062,744
131 4,062,745
159.12 4,062,746
164 4,062,747
176 4,062,748
192 SP 4,062,749
195 P 4,062,750
212 4,062,751
213 4,062,752
266 4,062,753
268 4,062,754
275 4,062,755
301 4,062,756

CLASS 206
1.5 4,062,445
223 4,062,446
396 4,062,447
432 4,062,448
471 4,062,449
485 4,062,450
524.2 4,062,451
626 4,062,486

CLASS 208
61 4,062,757
80 4,062,758
113 4,062,759
127 4,062,760
164 4,062,761
211 4,062,762
264 4,062,763
348 4,062,764

CLASS 209
1 4,062,765
211 4,062,766
212 4,062,767
341 4,062,768
399 4,062,769

CLASS 210
12 4,062,770
23 F 4,062,771
63 R 4,062,772
65 4,062,773
94 4,062,774
189 4,062,775
205 4,062,776
264 4,062,777
321 B 4,062,778
386 4,062,779
401 4,062,780
446 4,062,781
500 M 4,062,782

CLASS 211
55 4,062,452
60 SK 4,062,453

CLASS 214
1 CM 4,062,455
1 HH 4,062,454
4,062,457
1 P 4,062,456
16.4 R 4,062,458
21 4,062,459
58 4,062,460
85.5 4,062,461
152 4,062,462
301 4,062,463
450 4,062,464
516 4,062,465

CLASS 215
252 4,062,466

CLASS 219
62 4,063,058
68 4,063,059
93 4,063,060
101 4,063,061
121 EM 4,063,062
121 L 4,063,064
121 LM 4,063,063
162 4,063,065
216 4,063,066
374 4,063,067
441 4,063,068
545 4,063,069

CLASS 220
3.3 4,062,470
7 4,062,467
9 A 4,062,468
268 4,062,469
269 4,062,471
334 Re.29,494

CLASS 222
1 Re.29,495
4,062,472
5 4,062,473
36 4,062,474
95 4,062,475
131 4,062,476
145 4,062,477
402.16 4,062,478
495 4,062,479
571 4,062,480

CLASS 224
2 B 4,062,481
5 D 4,062,482

CLASS 226
196 4,062,484

CLASS 227
147 4,062,483

CLASS 228
56 4,062,485

CLASS 229
52 B 4,062,487

CLASS 234
115 4,062,488

CLASS 235
92 T 4,063,071
302 4,063,080
312 4,063,081
474 4,063,070

CLASS 237
1 A 4,062,489

CLASS 238
338 4,062,490

CLASS 239
66 4,062,491
125 4,062,492
197 4,062,493
230 4,062,494
559 4,062,495
683 4,062,496

CLASS 241
34 4,062,497
101.7 4,062,498
259 4,062,499
285 R 4,062,500

CLASS 242
7.03 4,062,502
18 G 4,062,501
35.5 R 4,062,503
55 4,062,504
128 4,062,505
199 4,062,506

CLASS 244
17.17 4,062,507
83 F 4,062,508
166 4,062,509

CLASS 248
102 4,062,510
300 4,062,511
309 R 4,062,512

CLASS 249
20 4,062,513
41 4,062,514

CLASS 250
199 4,063,083
4,063,084
221 4,063,085
237 G 4,063,086
253 4,063,087
272 4,063,088
4,063,089
284 4,063,090
310 4,063,091
322 4,063,092
330 4,063,093
338 4,063,094
4,063,095
343 4,063,096
360 4,063,097
396 R 4,063,098
413 4,063,099
452 4,063,100
475 4,063,101
482 4,063,102
492 A 4,063,103
519 4,062,518
523 4,063,104

CLASS 251
167 4,062,515
174 4,062,516
322 4,062,517

CLASS 252
49.5 4,062,784
49.6 4,062,785
51.5 A 4,062,787
51.5 R 4,062,786
54.6 4,062,788
62.1 L 4,062,789
62.9 4,062,790
63 4,062,791
93 4,062,792
99 4,062,793
171 4,062,794
4,062,795
180 4,062,796
182 4,062,797
299 4,062,798
316 4,062,799
402 4,062,800
414 4,062,801
429 B 4,062,803
4,062,804
430 4,062,805
4,062,806
435 4,062,802
443 4,062,807
454 4,062,808
455 R 4,062,809
462 4,062,810
4,062,811
500 4,062,812
511 4,062,813
529 4,062,814

CLASS 254
141 4,062,519
161 4,062,520

CLASS 256
1 4,062,521
4,062,522
47 4,062,523

CLASS 260
8 4,062,815
4,062,816
17 R 4,062,818
17.45 G 4,062,817
18 N 4,062,819
4,062,820
29.4 R 4,062,822
29.4 UA 4,062,821
4,062,823
29.6 AN 4,062,857
30.4 R 4,062,824
37 N 4,062,825
40 TN 4,062,826
42.21 4,062,827
45.7 P 4,062,828
45.85 T 4,062,829
47 EP 4,062,832
47 UA 4,062,831
47 UP 4,062,830
77.5 AA 4,062,834
77.5 AT 4,062,833
112.5 LH 4,062,835
154 4,062,836
175 4,062,837
176 4,062,838
239 BF 4,062,841
239 D 4,062,840
239.1 4,062,842
239.3 R 4,062,839
239.55 R 4,062,843
256.4 Q 4,062,844
256.5 R 4,062,845
4,062,846
260 4,062,847
268 PC 4,062,848
279 R 4,062,849
286 R 4,062,850
289 C 4,062,851
293.55 4,062,852
294.8 G 4,062,853
295 A 4,062,854
295 PA 4,062,855
295.5 B 4,062,856
296 P 4,062,858
302 A 4,062,859
302 D 4,062,860
307 C 4,062,862
307 H 4,062,861
315 4,062,864
319.1 4,062,865
326.14 R 4,062,866
326.16 4,062,869
329 ME 4,062,867
332.2 A 4,062,868
345.2 4,062,870
346.4 4,062,871
4,062,872
346.75 4,062,873
346.76 4,062,874
351 4,062,875
391 4,062,876
4,062,877
395 4,062,878
396 R 4,062,879
397.1 4,062,880
399 4,062,881
428.5 4,062,882
429 R 4,062,883
463 4,062,884
465 C 4,062,885
514 D 4,062,783
545 P 4,062,888
553 D 4,062,889
553 R 4,062,890
562 P 4,062,891
564 E 4,062,892
577 4,062,893
586 R 4,062,894
613 R 4,062,895
4,062,896
615 A 4,062,897
632 B 4,062,898
635 Y 4,062,899
637 R 4,062,900
652.5 R 4,062,901
666 A 4,062,902
668 A 4,062,903
668 R 4,062,904
682 4,062,905
739 4,062,906
860 4,062,907
885 4,062,908
928 4,062,909

CLASS 261
34 A 4,062,910
91 4,062,911
116 4,062,912

CLASS 264
24 4,062,913
40.1 4,062,914
50 4,062,915
95 4,062,916
102 4,062,917
132 4,062,918
145 4,062,919
153 4,062,920
233 4,062,921
294 4,062,922

CLASS 266
103 4,062,528
156 4,062,529
222 4,062,530
226 4,062,531

CLASS 271
6 4,062,532
10 4,062,533
174 4,062,534
4,062,535
177 4,062,536
201 4,062,537
243 4,062,538

CLASS 273
54 B 4,062,540
73 C 4,062,541
95 A 4,062,542
110 4,062,543
134 AE 4,062,545
134 AF 4,062,544
136 F 4,062,546

CLASS 274
9 A 4,062,547
23 B 4,062,548

CLASS 277
12 4,062,549
92 4,062,550
102 4,062,551

CLASS 279
1 TS 4,062,552

CLASS 280
11.37 A 4,062,553
11.37 D 4,062,554
42 4,062,555
79.2 4,062,556
87.04 A 4,062,557
205 4,062,558
460 R 4,062,559
478 R 4,062,560
605 4,062,561
4,062,562
625 4,062,563
652 4,062,564
655 4,062,565
751 4,062,566

CLASS 282
27.5 4,062,567

CLASS 283
66 R 4,062,568

CLASS 285
4 4,062,569
22 4,062,570
26 4,062,571
55 4,062,572
116 4,062,573
340 4,062,574

CLASS 292
67 4,062,575
258 4,062,576
262 4,062,577
4,062,578
348 4,062,579

CLASS 293
62 4,062,580

CLASS 294
83 A 4,062,581

CLASS 296
28 C 4,062,582
76 4,062,583

CLASS 297
193 4,062,584
195 4,062,585
248 4,062,586
306 4,062,587
385 4,062,588
450 4,062,589
455 4,062,590

CLASS 298
2 4,062,591
22 B 4,062,592

CLASS 299
1 4,062,593
10 4,062,594
18 4,062,595

CLASS 302
52 4,062,596

CLASS 303
6 C 4,062,597

CLASS 305
58 PC 4,062,598

CLASS 307
64 4,063,108
88.3 4,063,105
4,063,106
106 4,063,107
4,063,109
112 4,063,110
116 4,063,111
4,063,112
205 4,063,113
225 C 4,063,114
252 G 4,063,115
254 4,063,116
270 4,063,117
4,063,118
279 4,063,119
297 4,063,120
311 4,063,121

CLASS 308
1 A 4,062,599
2 A 4,062,600
2 R 4,062,601
6 C 4,062,602
217 4,062,603

CLASS 310
64 4,063,122
270 4,063,123

CLASS 312
211 4,062,604
235 R 4,062,605
237 4,062,606
258 4,062,607

CLASS 313
60 4,063,124
62 4,063,125
146 4,063,126
325 4,063,127
409 4,063,128

CLASS 315
39.71 4,063,129
150 4,063,130
169 TV 4,063,131
248 4,063,132
370 4,063,133
371 4,063,134

CLASS 318
139 4,063,136
212 4,063,137
220 A 4,063,135
318 4,063,138
331 4,063,139
561 4,063,140
648 4,063,141
678 4,063,142

CLASS 323
4 4,063,146
4,063,149
22 Z 4,063,147
43.5 S 4,063,148

CLASS 324
6 4,063,151
.5 R 4,063,150
16 T 4,063,152
30 R 4,063,153
32 4,063,154
4,063,155
33 4,063,156
52 4,063,160
4,063,161
4,063,162
4,063,163
4,063,164
4,063,165
4,063,166
61 R 4,063,167
72 4,063,168
79 D 4,063,169
132 4,063,170
133 4,063,171
158 P 4,063,172
213 4,063,157
224 4,063,158
260 4,063,159

CLASS 325
11 4,063,173
304 4,063,174
377 4,063,175
446 4,063,176
460 4,063,177
464 4,063,178
470 4,063,179

CLASS 328
112 4,063,180
147 4,063,181
151 4,063,182
163 4,063,183
221 4,063,184

CLASS 330
107 4,063,187
255 4,063,185
287 4,063,186

CLASS 331
11 4,063,188
94.5 G 4,063,190
4,063,191
4,063,192
94.5 H 4,063,189
117 R 4,063,193
162 4,063,194

CLASS 332
7.51 4,063,195
16 T 4,063,196
4,063,197
41 4,063,199

CLASS 333
30 R 4,063,198
70 A 4,063,200
70 R 4,063,201
72 4,063,202

CLASS 335
154 4,063,203
193 4,063,204
202 4,063,205

CLASS 336
45 4,063,206
171 4,063,207

CLASS 337
248 4,063,208

CLASS 338
4 4,063,209
7 4,063,210
308 4,063,211

CLASS 339
5 RL 4,062,608
8 RL 4,062,609
17 M 4,062,611
75 M 4,062,610
4,062,617
94 A 4,062,612
95 B 4,062,613
97 R 4,062,614
98 4,062,615
99 R 4,062,616

CLASS 340
3 F 4,063,212
7 PC 4,063,213
8 L 4,063,214
8 LF 4,063,215
15.5 DS 4,063,216
26 4,063,218
70 4,063,217
146.3 MA 4,063,219
147 LP 4,063,220
237 S 4,063,227
239 R 4,063,228
280 4,063,229
4,063,230
324 A 4,063,233
324 AD 4,063,232
324 M 4,063,231
334 4,063,234
347 DD 4,063,235
347 NT 4,063,236

CLASS 343
7 VM 4,063,237
7.3 4,063,238
8 4,063,239
9 4,063,240
18 B 4,063,241
100 SA 4,063,242
4,063,243
105 R 4,063,244
700 MS 4,063,245
4,063,246
704 4,063,247
727 4,063,248
756 4,063,249
844 4,063,250

CLASS 346
33 R 4,063,251
75 4,063,252
4,063,253
4,063,254
139 C 4,063,255

CLASS 350
3.5 4,062,618
13 4,062,619
91 4,062,623
96 C 4,062,620
4,062,624
160 LC 4,062,626
162 R 4,062,628
184 4,062,621
202 4,062,625
214 4,062,622
223 4,062,630

CLASS 351
160 4,062,627
169 4,062,629

CLASS 354
13 4,063,256
31 4,063,257
81 4,063,258
120 4,063,259
149 4,063,260
225 4,063,261
246 4,063,262
253 4,063,263
286 4,063,264
294 4,063,265
295 4,063,266

CLASS 355
3 R 4,062,631

CLASS 356
72 4,062,632
159 4,062,633
248 4,062,634

CLASS 357
23 4,063,267
30 4,063,268
4,063,269
4,063,276
38 4,063,270
4,063,277
4,063,278
43 4,063,273
49 4,063,271
50 4,063,272
53 4,063,274
54 4,063,275

CLASS 358
19 4,063,279
22 4,063,280
105 4,063,281
106 4,063,282
107 4,063,283
127 4,063,284
128 4,063,285
4,063,286
4,063,287
148 4,063,288
242 4,063,289

CLASS 360
9 4,063,290
40 4,063,291
60 4,063,292
62 4,063,293
92 4,063,294
99 4,063,295
118 4,063,296

CLASS 361
14 4,063,297
40 4,063,298
45 4,063,299
78 4,063,300
88 4,063,301
90 4,063,302
170 4,063,303
242 4,063,304
339 4,063,305

CLASS 362
290 4,063,079

CLASS 363
17 4,063,306
21 4,063,307
40 4,063,143
43 A 4,063,144
71 4,063,145

CLASS 364
105 4,062,648
119 4,063,075
200 4,063,308
414 4,063,074
431 4,063,072
439 4,063,073
472 4,063,076
502 4,063,077
555 4,063,309
700 4,063,078
728 4,063,082
900 4,063,221
4,063,310
4,063,311

CLASS 365
116 4,063,223
125 4,063,226
126 4,063,222
156 4,063,225
189 4,063,224

CLASS 366
114 4,062,527
138 4,062,525
171 4,062,526
340 4,062,524

CLASS 401
175 4,062,635

CLASS 403
13 4,062,636
151 4,062,637

CLASS 416
244 A 4,062,638

CLASS 417
404 4,062,639
415 4,062,640

CLASS 423
11 4,062,923
150 4,062,924
240 4,062,925
244 4,062,926
387 4,062,927
392 4,062,928
483 4,062,929
4,062,930
522 4,062,931
574 R 4,062,932

CLASS 424
1 4,062,933
5 4,062,934
12 4,062,935
4,062,936
47 4,062,937
4,062,938
70 4,062,939
80 4,062,940
94 4,062,941
100 4,062,942
115 4,062,943
117 4,062,944
122 4,062,945
134 4,062,946
180 4,062,947
4,062,948
4,062,949
181 4,062,950
200 4,062,951
228 4,062,952
232 4,062,953
241 4,062,954
248.56 4,062,955
248.57 4,062,956
249 4,062,957
250 4,062,958
4,062,959
258 4,062,960
4,062,961
263 4,062,962
267 4,062,963
4,062,964
273 R 4,062,863
4,062,965
4,062,966
4,062,967
275 4,062,968
278 4,062,969
279 4,062,970
298 4,062,971
308 4,062,972
4,062,973
4,062,974
319 4,062,975
4,062,976
324 4,062,977
331 4,062,978

CLASS 425
6 4,062,641

CLASS 426
44 4,062,979
278 4,062,980
4,062,981
320 4,062,982
418 4,062,983
430 4,062,984
483 4,062,985
633 4,062,986
641 4,062,987
643 4,062,409
656 4,062,988

CLASS 427
176 4,062,989
242 4,062,990
297 4,062,991

CLASS 428
90 4,062,992
93 4,062,993
101 4,062,994
134 4,062,995
334 4,062,996
378 4,062,997
380 4,062,998
391 4,062,999
403 4,063,000
410 4,063,001
411 4,063,002
537 4,063,003
626 4,063,004

CLASS 429
103 4,063,005
119 4,063,006
176 4,063,007

CLASS 526
47 4,063,008
159 4,063,009
169 4,063,010
194 4,063,011
219 4,063,012
227 4,063,013

CLASS 536
9 4,063,014
17 4,063,015
20 4,063,016
57 4,063,017
98 4,063,018

CLASS 544
27 4,063,019
221 4,063,020

CLASS 548
317 4,063,021
4,063,022
342 4,063,023

CLASS 560
21 4,062,886
26 4,063,024
29 4,063,025
121 4,063,026
185 4,062,887

CLASSIFICATION OF DESIGNS

D2— 206 246,616
250 246,617
D6— 4 246,618
47 246,620
49 246,621
63 246,622
85 246,623
108 246,624
191 246,625
201 246,626
D7— 24 246,619
85 246,627
202 246,628
246,629
D8— 58 246,630
306 246,631
D9— 42 246,632
179 246,633
224 246,634
D10— 106 246,635
D11— 89 246,636
149 246,637
D12— 53 246,638
70 246,639
141 246,640
246,641
246,642
162 246,643
181 246,644
186 246,645
D13— 17 246,646
246,647
36 246,648
246,649
D14— 44 246,670
53 246,650
246,651
D16— 06 246,652
59 246,653
65 246,654
246,655
246,656
82 246,657
D19— 56 246,658
69 246,659
D22— 8 246,660
13 246,661
25 246,662
27 246,664
31 246,663
D24— 2 246,665
8 246,666
15 246,667
246,668
D25— 19 246,669
D29— 7 246,671
D30— 40 246,672
D34— 4 A 246,673
5 BB 246,675
5 SS 246,674
15 AN 246,676
D48— 20 K 246,677
24 R 246,678
D87— 1 R 246,679
3 F 246,680

CLASSIFICATION OF PLANTS

P.— 43 4,163
86 4,164
88 4,165

GEOGRAPHICAL INDEX OF RESIDENCE OF INVENTORS

(U.S. States, Territories and Armed Forces, the Commonwealth of Puerto Rico, and the Canal Zone)

Alabama	1	Kentucky	21	Oregon	41
Alaska	2	Louisiana	22	Pennsylvania	42
American Samoa	3	Maine	23	Puerto Rico	43
Arizona	4	Maryland	24	Rhode Island	44
Arkansas	5	Massachusetts	25	South Carolina	45
California	6	Michigan	26	South Dakota	46
Canal Zone	7	Minnesota	27	Tennessee	47
Colorado	8	Mississippi	28	Texas	48
Connecticut	9	Missouri	29	Utah	49
Delaware	10	Montana	30	Vermont	50
District of Columbia	11	Nebraska	31	Virginia	51
Florida	12	Nevada	32	Virgin Islands	52
Georgia	13	New Hampshire	33	Washington	53
Guam	14	New Jersey	34	West Virginia	54
Hawaii	15	New Mexico	35	Wisconsin	55
Idaho	16	New York	36	Wyoming	56
Illinois	17	North Carolina	37	U.S. Air Force	57
Indiana	18	North Dakota	38	U.S. Army	58
Iowa	19	Ohio	39	U.S. Navy	59
Kansas	20	Oklahoma	40		

(First number in listing denotes location according to above key. Refer to patent number in body of the Official Gazette to obtain details as to inventor name, location, etc.)

PATENTS

1 : 4,062,493
4,062,535
4,063,088
4,063,096
2 : 4,062,379
3 : 4,062,078
4 : 4,062,222
4,062,352
4,062,546
4,062,767
4,063,081
4,063,173
4,063,238
4,063,239
5 : 4,062,142
4,063,186
6 : Re.29,494
4,062,070
4,062,076
4,062,077
4,062,102
4,062,104
4,062,105
4,062,115
4,062,138
4,062,149
4,062,164
4,062,165
4,062,167
4,062,180
4,062,181
4,062,192
4,062,206
4,062,210
4,062,239
4,062,245
4,062,253
4,062,260
4,062,264
4,062,266
4,062,277
4,062,283
4,062,287
4,062,288
4,062,289
4,062,291
4,062,313
4,062,325
4,062,350
4,062,356
4,062,359
4,062,360
4,062,365
4,062,377
4,062,384
4,062,385
4,062,414
4,062,435
4,062,464
4,062,469
4,062,513
4,062,536
4,062,544
4,062,547
4,062,557
4,062,564
4,062,575
4,062,576
4,062,582
4,062,594
4,062,599
4,062,600
4,062,605
4,062,615
4,062,634
4,062,648
4,062,649
4,062,670
4,062,696
4,062,697
4,062,699
4,062,703
4,062,709
4,062,711
4,062,713
4,062,716
4,062,728
4,062,751
4,062,809
4,062,873
4,062,883
4,062,892
4,062,903
4,062,920
4,062,932
4,062,937
4,062,971
4,062,977
4,062,984
4,062,985
4,062,988
4,063,013
4,063,064
4,063,073
4,063,084
4,063,090
4,063,091
4,063,092
4,063,100
4,063,110
4,063,116
4,063,117
4,063,130
4,063,135
4,063,152
4,063,156
4,063,179
4,063,187
4,063,189
4,063,191
4,063,192
4,063,193
4,063,195
4,063,202
4,063,207
4,063,215
4,063,220
4,063,222
4,063,233
4,063,246
4,063,266
4,063,267
4,063,279
4,063,291
4,063,292
7 : 4,063,009
8 : 4,062,411
4,062,659
4,062,926
4,062,983
4,063,083
4,063,254
9 : 4,062,132
4,062,231
4,062,237
4,062,298
4,062,396
4,062,430
4,062,468
4,062,471
4,062,505
4,062,583
4,062,701
4,062,704
4,062,723
4,062,725
4,062,844
4,062,944
4,062,945
4,062,960
4,062,976
4,063,057
4,063,093
4,063,167
4,063,176
4,063,263
4,063,305
4,063,309
08 : 4,063,221
10 : 4,062,738
4,062,806
4,062,921
4,063,016
11 : 4,063,094
12 : 4,062,111
4,062,112
4,062,123
4,062,200
4,062,286
4,062,293
4,062,339
4,062,391
4,062,423
4,062,429
4,062,494
4,062,578
4,062,776
4,063,036
4,063,048
13 : 4,062,270
4,062,993
4,063,265
16 : 4,062,133
4,062,168
17 : 4,062,063
4,062,086
4,062,087
4,062,131
4,062,146
4,062,148
4,062,155
4,062,221
4,062,233
4,062,234
4,062,243
4,062,273
4,062,278
4,062,343
4,062,355
4,062,358
4,062,362
4,062,371
4,062,401
4,062,420
4,062,443
4,062,447
4,062,476
4,062,484
4,062,523
4,062,533
4,062,574
4,062,577
4,062,580
4,062,621
4,062,625
4,062,664
4,062,679
4,062,773
4,062,780
4,062,785
4,062,792
4,062,801
4,062,815
4,062,843
4,062,872
4,062,874
4,062,890
4,062,904
4,062,909
4,062,980
4,062,981
4,063,014
4,063,034
4,063,045
4,063,046
4,063,050
4,063,059
4,063,108
4,063,144
4,063,157
4,063,161
4,063,171
4,063,178
4,063,205
4,063,208
4,063,217
4,063,307
18 : 4,062,188
4,062,214
4,062,215
4,062,230
4,062,297
4,062,332
4,062,336
4,062,407
4,062,410
4,062,425
4,062,460
4,062,532
4,062,540
4,062,609
4,062,638
4,062,668
4,062,678
4,062,802
4,062,816
4,062,895
4,062,970
4,063,017
4,063,035
4,063,039
4,063,060
4,063,133
19 : 4,062,568
4,062,639
4,062,726
4,063,121
4,063,140
20 : 4,062,209
4,062,280
4,062,431
4,062,588
21 : 4,062,201
4,062,205
4,062,282
4,062,314
4,062,507
4,063,206
22 : 4,062,406
4,062,413
4,062,727
4,062,762
4,062,841
4,062,943
4,063,244
24 : 4,062,256
4,062,261
4,062,265
4,062,315
4,062,481
4,062,508
4,062,511
4,062,616
4,062,694
4,062,720
4,062,744
4,062,748
4,062,897

4,063,038
4,063,200
4,063,243
4,063,297
25 : 4,062,130
4,062,143
4,062,208
4,062,316
4,062,329
4,062,346
4,062,376
4,062,388
4,062,510
4,062,584
4,062,589
4,062,629
4,062,756
4,062,781
4,062,867
4,063,098
4,063,105
4,063,132
4,063,148
4,063,153
4,063,227
4,063,232
4,063,259
4,063,293
26 : 4,062,083
4,062,101
4,062,147
4,062,171
4,062,217
4,062,220
4,062,224
4,062,269
4,062,272
4,062,274
4,062,292
4,062,399
4,062,421
4,062,440
4,062,472
4,062,482
4,062,500
4,062,560
4,062,587
4,062,633
4,062,637
4,062,708
4,062,718
4,062,729
4,062,808
4,062,814
4,062,823
4,062,833
4,062,835
4,062,853
4,062,880
4,062,898
4,062,910
4,062,962
4,062,975
4,062,986
4,063,026
4,063,075
4,063,146
4,063,175
4,063,210
4,063,219
4,063,226
27 : Re.29,495
4,062,136
4,062,302
4,062,306
4,062,335
4,062,434
4,062,449
4,062,487
4,062,595
4,062,721
4,063,068
4,063,196
4,063,197
4,063,231
28 : 4,063,053
29 : 4,062,075
4,062,081
4,062,095
4,062,122
4,062,305
4,062,590
4,062,596
4,062,669
4,062,876
4,062,933
4,063,056
30 : 4,062,735
32 : 4,062,752
33 : Re.29,491
4,062,145
4,062,232
4,062,268
4,062,522
4,062,617
34 : 4,062,067
4,062,079
4,062,118
4,062,126
4,062,191
4,062,193
4,062,255
4,062,299
4,062,308
4,062,311
4,062,318
4,062,326
4,062,395
4,062,400
4,062,451
4,062,463
4,062,497
4,062,509
4,062,541
4,062,543
4,062,549
4,062,572
4,062,573
4,062,585
4,062,606
4,062,608
4,062,614
4,062,618
4,062,632
4,062,644
4,062,656
4,062,671
4,062,706
4,062,747
4,062,755
4,062,760
4,062,761
4,062,763
4,062,786
4,062,794
4,062,797
4,062,839
4,062,846
4,062,852
4,062,856
4,062,868
4,062,894
4,062,905
4,062,919
4,062,938
4,062,947
4,062,952
4,062,953
4,062,957
4,062,958
4,062,961
4,062,964
4,062,987
4,062,995
4,063,002
4,063,015
4,063,023
4,063,031
4,063,047
4,063,106
4,063,123
4,063,158
4,063,168
4,063,188
4,063,209
4,063,225
4,063,256
4,063,274
4,063,277
35 : 4,063,190
36 : 4,062,064
4,062,065
4,062,069
4,062,082
4,062,084
4,062,108
4,062,109
4,062,110
4,062,119
4,062,120
4,062,137
4,062,158
4,062,170
4,062,189
4,062,211
4,062,212
4,062,228
4,062,229
4,062,320
4,062,341
4,062,353
4,062,369
4,062,370
4,062,372
4,062,387
4,062,438
4,062,455
4,062,459
4,062,466
4,062,470
4,062,483
4,062,485
4,062,503
4,062,538
4,062,558
4,062,565
4,062,567
4,062,619
4,062,663
4,062,673
4,062,680
4,062,681
4,062,686
4,062,693
4,062,698
4,062,731
4,062,749
4,062,753
4,062,765
4,062,812
4,062,818
4,062,837
4,062,854
4,062,864
4,062,886
4,062,917
4,062,954
4,062,990
4,063,003
4,063,004
4,063,012
4,063,022
4,063,037
4,063,051
4,063,078
4,063,079
4,063,080
4,063,087
4,063,095
4,063,111
4,063,126
4,063,141
4,063,155
4,063,172
4,063,214
4,063,223
4,063,228
4,063,240
4,063,248
4,063,251
4,063,252
4,063,281
4,063,288
4,063,290
4,063,299
4,063,306
4,063,308
37 : 4,062,367
4,062,380
4,062,496
4,062,610
38 : 4,062,141
39 : 4,062,099
4,062,121
4,062,161
4,062,185
4,062,186
4,062,195
4,062,296
4,062,312
4,062,433
4,062,450
4,062,452
4,062,486
4,062,501
4,062,502
4,062,525
4,062,658
4,062,675
4,062,817
4,062,819
4,062,820
4,062,829
4,062,842
4,062,881
4,062,915
4,062,925
4,062,992
4,063,027
4,063,131
4,063,154
4,063,229
4,063,311
40 : 4,062,324
4,062,403
4,062,405
4,062,461
4,062,772
4,062,795
4,062,796
41 : 4,062,134
4,062,345
4,062,800
4,063,289
42 : 4,062,096
4,062,106
4,062,144
4,062,162
4,062,163
4,062,172
4,062,187
4,062,207
4,062,238
4,062,246
4,062,251
4,062,279
4,062,303
4,062,317
4,062,319
4,062,321
4,062,331
4,062,348
4,062,363
4,062,375
4,062,397
4,062,415
4,062,462
4,062,465
4,062,473
4,062,479
4,062,520
4,062,530
4,062,666
4,062,677
4,062,757
4,062,783
4,062,821
4,062,859
4,062,887
4,062,891
4,062,902
4,062,939
4,062,946
4,062,979
4,063,001
4,063,011
4,063,024
4,063,028
4,063,033
4,063,089
4,063,128
4,063,199
4,063,230
4,063,283
4,063,298
43 : 4,062,774
44 : 4,062,422
4,063,006
4,063,102
45 : 4,062,197
4,062,381
4,062,586
4,062,972
4,062,989
47 : 4,062,068
4,062,117
4,062,128
4,062,340
4,062,344
4,062,515
4,062,743
4,062,827
4,062,907
4,063,005
48 : 4,062,066
4,062,114
4,062,225
4,062,236
4,062,248
4,062,285
4,062,354
4,062,454
4,062,456
4,062,516
4,062,640
4,062,651
4,062,759
4,062,764
4,062,832
4,062,922
4,063,077
4,063,112
4,063,183
4,063,198
4,063,213
4,063,250
4,063,271
4,063,278
4,063,295
49 : 4,062,247
4,062,330
4,062,373
4,062,655
4,062,928
50 : 4,062,223
4,062,235
51 : 4,062,073
4,062,227
4,062,347
4,062,426
4,062,490
4,062,519
4,062,650
4,062,996
4,063,044
4,063,139
4,063,268
4,063,282
53 : 4,062,152
4,062,202
4,062,203
4,062,342
4,062,412
4,062,598
4,062,607
4,062,855
4,063,169
4,063,212
4,063,294
54 : 4,062,404
4,062,512
4,062,969
55 : 4,062,116
4,062,135
4,062,157
4,062,276
4,062,378
4,062,408
4,062,424
4,062,475
4,062,489
4,062,518
4,062,542
4,062,717
4,062,746
4,062,769
4,063,007
4,063,097
4,063,204
4,063,258
56 : 4,062,436

DESIGN PATENTS

1 : 246,630
4 : 246,643
6 : 246,616
246,626
246,639
246,658
246,661
246,667
246,668
246,671
246,672
246,680
8 : 246,638
9 : 246,648
246,649
246,654
246,656
12 : 246,617
246,647
246,665
17 : 246,618
246,635
246,651
246,669
22 : 246,632
26 : 246,644
246,666
29 : 246,646
32 : 246,655
34 : 246,621
36 : 246,657
246,670
39 : 246,623
246,636
41 : 246,645
42 : 246,625
246,628
246,629
246,631
246,634
45 : 246,663
48 : 246,664

PLANT PATENTS

6 : 4,163

U. S. GOVERNMENT PRINTING OFFICE : O - 1977

CHANGE OF ADDRESS FORM

NAME—FIRST, LAST

COMPANY NAME OR ADDITIONAL ADDRESS LINE

STREET ADDRESS

CITY | STATE | ZIP CODE

PLEASE PRINT OR TYPE

(or) COUNTRY

Mail this form to: NEW ADDRESS

Superintendent of Documents
Government Printing Office SSOM
Washington, D.C. 20402

Attach last subscription label here.

SUBSCRIPTION ORDER FORM

SUBSCRIPTION ORDER FORM

ENTER MY SUBSCRIPTION TO:

@ $ Domestic; @ $ Foreign.

NAME—FIRST, LAST

COMPANY NAME OR ADDITIONAL ADDRESS LINE

STREET ADDRESS

CITY | STATE | ZIP CODE

PLEASE PRINT OR TYPE

(or) COUNTRY

☐ Remittance Enclosed (Make checks payable to Superintendent of Documents)

☐ Charge to my Deposit Account No. ....

MAIL ORDER FORM TO:
Superintendent of Documents
Government Printing Office
Washington, D.C. 20402

OFFICIAL GAZETTE of the UNITED STATES PATENT and TRADEMARK OFFICE

December 20, 1977 Volume 965 Number 3

CONTENTS

The following are mailed under direction of the Superintendent of Documents, Government Printing Office, Washington, D.C., 20402, to whom all subscriptions should be made payable and all communications addressed:

THE OFFICIAL GAZETTE (PATENTS SECTION), issued weekly, subscription $342.20 per annum for first class mailing, also available as fourth-class mail at $250.00; foreign mailing $85.55 additional; single copies $6.60 each.

THE OFFICIAL GAZETTE (TRADEMARK SECTION), issued weekly, subscription $88.40 per annum, foreign mailing $22.10 additional; single copies $1.70 each.

CIRCULARS OF GENERAL INFORMATION concerning PATENTS, price 60 cents each.

CIRCULARS OF GENERAL INFORMATION concerning TRADEMARKS, price 50 cents each.

PRINTED COPIES OF PATENTS are furnished by the Patent and Trademark Office at 50 cents each; PLANT PATENTS in color, $1.00 each; copies of TRADEMARKS AND DESIGN PATENTS at 20 cents each. Address orders to the Commissioner of Patents and Trademarks, Washington, D.C., 20231.

Printing authorized by Section 11(a)3 of Title 35, U.S. Code P.T.O.

PATENT AND TRADEMARK OFFICE NOTICES

Extension of Time Limit

This notice is intended to clarify certain misunderstandings and indicates the treatment given to requests for an extension of time in a situation where applicant has been given a time limit to complete an otherwise incomplete but bona fide attempt to respond to the previous Office action and advance the case to final action.

According to 37 CFR 1.135(c) when the applicant has filed a response to an examiner's action but consideration of some matter or compliance with some requirement has been inadvertently omitted, an opportunity to explain and supply the omission may be given before the question of abandonment is considered. According to the M.P.E.P., Section 710.02(c), the examiner may give applicant one month or the remainder of the period for response, whichever is longer, to complete the response. Neither the regulation nor the M.P.E.P. indicate that this time can be extended.

Under the regulation, the missing matter or lack of compliance must be considered by the examiner as being "inadvertently omitted." Once an inadvertent omission is brought to the attention of the applicant, the question of inadvertence no longer exists. Therefore, any further time to complete the response would not be appropriate under 37 CFR 1.135(c). Accordingly, no extension of time will henceforth be granted in these situations.

WILLIAM FELDMAN,
Deputy Assistant Commissioner for Patents.

Nov. 28, 1977.

Patent Suits

Notices under 35 U.S.C. 290; Patent Act of 1952

3,061,139, B. Edwards, SELF-VENTING PACKAGE; **3,091,360**, same, NESTABLE CUP; **3,139,213**, same, **filed** Mar. 6, 1969, D.C., N.D. Ill. (Chicago), Doc. 69c481, *Illinois Tool Works Inc.* v. *Foster Grant Co., Inc.* Case dismissed, Mar. 4, 1974.

3,091,360. (See 3,061,139.)

3,139,213. (See 3,061,139.)

3,211,211, W. R. Youngs, AIRCRAFT HANGAR AND DOOR, **filed** June 7, 1976, D.C., N.D. Ill. (Chicago), Doc. 76c2091, *R. L. Kuss & Co.* v. *Channon Corp.* Enter consent judgment, case dismissed, June 21, 1977.

3,404,675, R. E. Payne, LIFT-OFF OVEN DOOR SEAL; **3,810,483**, A. W. Vonderhaar, REMOVABLE OVEN DOOR SEAL, **filed** May 28, 1976, D.C., N.D. Ill. (Chicago), Doc. 76c1994, *K & M Rubber Co.* v. *The Tappan Co.* Voluntary dismissal per F.R.C.P. 41(a)(1)(II), June 9, 1977.

3,690,431, R. Howard, PRINT HEAD ASSEMBLY CONTAINING SOLENOIDS; **3,703,949**, Howard, Robinson and Menhennett, HIGH-SPEED PRINTER; **3,754,166**, R. Howard, DRIVER CIRCUIT FOR ACTUATING PRINT WIRE; **3,782,520**, same, RESILIENT HEAD ASSEMBLY HAVING RESILIENT MOUNT; **3,789,969**, Howard and Robinson, HIGH SPEED PRINTER; **3,802,543**, R. Howard, JEWEL BEARINGS FOR PRINTER HEADS AND THE LIKE; **3,802,544**, Howard and Robinson, HIGH SPEED DOT MATRIX PRINTER; **3,831,729**, R. Howard, SOLENOID HAVING INCREASED THROW CAPABILITY; **3,833,105**, same, PRINTER HEAD ASSEMBLY; **3,833,891**, Howard and Robinson, HIGH SPEED MATRIX PRINTER; **3,858,703**, H. Duley, BIDIRECTIONAL DUAL HEAD PRINTER; **3,882,986**, R. Howard, JEWEL BEARINGS FOR PRINTER HEADS AND THE LIKE; **3,926,292**, P. S. Ramsden, Jr., FORMAT CONTROL TECHNIQUE AND APPARATUS THEREFOR; **3,930,601**, Y. Masuda, SHEET MATERIAL PIN FEED TRACTOR MECHANISM; **3,940,726**, A. H. Gershnow, HIGH SPEED SOLENOID EMPLOYING MULTIPLE SPRINGS; **3,970,183**, Robinson and Ramsden, Jr., RANDOM ACCESS LINE PRINTER; **3,944,029**, M. Jozuka. DAMPER FOR PRINTING AND THE LIKE; **3,985,212**, Gershnow and Vitale, SPRING WRAP CLUTCH WITH BRAKE; **3,985,216**, R. McIntosh, THERMAL PRINT HEAD ASSEMBLY; **3,991,686**, J. I. Mechachonis, KNOCK-DOWN DISPLAY STAND; **3,991,870**, R. A. McIntosh, REPLACEABLE COMPOSIT WIRE GUIDE ASSEMBLY; **3,991,871**, same, PRINT HEAD AND PLASTIC BEARINGS THEREFOR; **3,994,382**, same, NON-LINEAR SPRING DESIGN FOR MATRIX TYPE PRINTING, **filed** July 6, 1977, D.C., S.D.N.Y., Doc. 77-C-3291, *SCI Systems, Inc.* v. *Centronics Data Computer Corp.*

3,703,949. (See 3,690,431.)

3,754,166. (See 3,690,431.)

3,782,520. (See 3,690,431.)

3,789,969. (See 3,690,431.)

3,802,543. (See 3,690,431.)

3,802,544. (See 3,690,431.)

3,810,483. (See 3,404,675.)

3,831,729. (See 3,690,431.)

3,833,105. (See 3,690,431.)

3,833,891. (See 3,690,431.)

3,843,859, Klemp and Cassibo, MICROWAVE OVEN DOOR ASSEMBLY, **filed** July 12, 1977, D.C., S.D.N.Y., Doc. C-3-77-320, *Litton Systems, Inc.* v. *Whirlpool Corporation.*

3,858,703. (See 3,690,431.)

3,882,986. (See 3,690,431.)

3,925,112, Petersen, Mackowiak and Schoenholz, SOLDER FLUXES, **filed** July 12, 1977, D.C., S.D.N.Y., Doc. 77-C-3387, *Hercules Chemical Co., Inc.* v. *Industrial Petolic Corp.*

3,926,292. (See 3,690,431.)

3,930,601. (See 3,690,431.)

3,940,726. (See 3,690,431.)

3,944,029. (See 3,690,431.)

3,970,183. (See 3,690,431.)

3,978,531, **B. E. Ilon**, LIFTING DEVICE, **filed** Feb. 15, 1977, D.C. (District of Columbia), Doc. 77-0281, *LaBarge, Inc.* v. *Bengt Erland Ilon et al.*

3,985,212. (See 3,690,431.)

3,985,216. (See 3,690,431.)

3,991,686. (See 3,690,431.)

3,991,870. (See 3,690,431.)

3,991,871. (See 3,690,431.)

3,994,382. (See 3,690,431.)

4,027,560, K. W. Parker, POWER WRENCHES WITH TWO POINT REACTION MEANS, **filed** July 18, 1977, D.C., S.D. Tex. (Houston), Doc. CA H-77-1137, *N-S-W Corporation* v. *Torque Systems International, Inc.*

Re. 27,357, F. G. Merser, TAG ATTACHING OR BUNDLE FASTENING DEVICE, **filed** July 11, 1977, D.C., N.D. Ill. (Chicago), Doc. 77c2484, *Dennison Manufacturing Company* v. *Tamp Corporation.*

Re. 28,404, R. W. McFarlin, CONTINUOUS ELECTRICAL OUTLET WITH GROUND, **filed** June 1, 1977, D.C., S.D. Fla. (Miami), Doc. 77-6251-C-JLK, *Robert W. McFarlain et al.* v. *J. M. Fields, Inc.*

Re. 28,460, B. Rous, CARTON, **filed** Aug. 17, 1976, D.C., E.D. Pa. (Philadelphia), Doc. 76-2628, *Stone Container Corporation* v. *Simkins Industries, Inc.* Judgment by consent, the counterclaim of defendant against plaintiff is hereby dismissed, June 8, 1977.

D. 207,718, F. J. Benes, TUMBLER OR SIMILAR ARTICLE, **filed** July 6, 1977, D.C., W.D. Okla. (Oklahoma City), Doc. 77-0657-T, *Anchor Hocking Corporation and Plastics Manufacturing Company* v. *Continental Plastics Company.*

REISSUE APPLICATIONS FILED

Notice under 37 CFR 1.11(b). The reissue applications listed below are open to inspection by the general public in the indicated Examining Groups and copies may be obtained by paying the fee therefor (37 CFR 1.21(b)).

3,412,062, Re. S.N. 845,832, Filed Oct. 26, 1977, Cl. 260/37 R, **PRODUCTION OF CARBON FIBRES AND COMPOSITIONS CONTAINING SAID FIBRES**, William

Johnson, et al., Owner of Record: *National Research Development Corporation, London, England*, Attorney or Agent: John W. Malley, et al., Ex. Gp.: 141

3,564,791, Re. S.N. 825,955, Filed Aug. 19, 1977, Cl. 52/169, SWIMMING POOL WALL, George F. Arp, Owner of Record: *Inventor*, Attorney or Agent: Eugene S. Stephens, et al., Ex. Gp.: 354

3,651,244, Re. S.N. 837,187, Filed Sept. 28, 1977, Cl. 174/36, POWER CABLE WITH CORRUGATED OR SMOOTH LONGITUDINALLY FOLDED METALLIC SHIELDING TAPE, David A. Silver, et al., Owner of Record: *General Cable Corporation, New York, N.Y.*, Attorney or Agent: Charles W. Neill, Ex. Gp.: 213

3,858,298, Re. S.N. 845,576, Filed Oct. 26, 1977, Cl. 29/237, SWAGING APPARATUS, Jon K. Whitledge, et al., Owner of Record: *Samuel Moore & Company, Mantua, Ohio*, Attorney or Agent: Davidson C. Miller, et al., Ex. Gp.: 323

3,908,805, Re. S.N. 837,748, Filed Sept. 28, 1977, Cl. 188/181 A, ANTI-SKID CONTROL DEVICE AND SYSTEM, Walter H. Morse, et al., Owner of Record: *The Jacobs Manufacturing Company, West Hartford, Conn.*, Attorney or Agent: Ronald A. Schapira, Ex. Gp.: 315

3,912,850, Re. S.N. 844,323, Filed Oct. 11, 1977, Cl. 174/28, HIGH FREQUENCY COAXIAL CABLE, Saverio Thomas Bruno, et al., Owner of Record: *Bunker Ramo Corporation, Oak Brook, Ill.*, Attorney or Agent: Frederick M. Arbuckle, Ex. Gp.: 213

3,916,833, Re. S.N. 843,164, Filed Oct. 17, 1977, Cl. 119/2, AQUEOUS CRUSTACEAN CULTURE SYSTEM, Steven A. Serfling, Owner of Record: *Inventor*, Attorney or Agent: Manfred M. Warren, et al.,,Ex. Gp.: 333

4,002,245, Re. S.N. 839,128, Filed Oct. 3, 1977, Cl. 214/1 BD, MATERIAL HANDLING APPARATUS HAVING GRIPPING MEANS FOR MOVING ARTICLES IN SEVERAL DIRECTIONS, George Mink, Owner of Record: *Inventor*, Attorney or Agent: J. King Harness, et al., Ex. Gp.: 314

4,024,439, Re. S.N. 843,713, Filed Oct. 20, 1977, Cl. 361/76, PROTECTION OF POLYPHASE EQUIPMENT, James E. McClain, et al., Owner of Record: *Esco Manufacturing Company, Greenville, Tex.*, Attorney or Agent: E. Mickey Hubbard, et al., Ex. Gp.: 212

PATENT NOTICES

Certificates of Correction for the Week of Dec. 20, 1977

3,709,903	4,025,657	4,039,232	4,041,449	4,043,299	4,044,786	4,045,916	4,047,767
3,882,245	4,026,298	4,039,272	4,041,652	4,043,301	4,044,925	4,045,949	4,047,816
3,922,622	4,026,764	4,039,358	4,041,711	4,043,326	4,044,943	4,046,032	4,047,957
3,925,507	4,026,865	4,039,387	4,041,780	4,043,379	4,045,203	4,046,038	4,048,284
3,936,739	4,027,005	4,039,495	4,041,854	4,043,508	4,045,253	4,046,090	4,048,306
3,948,929	4,030,106	4,039,720	4,041,922	4,043,523	4,045,308	4,046,100	4,048,407
3,977,216	4,030,945	4,039,800	4,041,940	4,043,923	4,045,332	4,046,137	4,048,464
3,985,943	4,031,074	4,039,857	4,041,991	4,043,949	4,045,405	4,046,213	4,048,537
3,989,768	4,031,168	4,039,979	4,042,070	4,043,950	4,045,434	4,046,290	4,048,738
3,994,910	4,032,294	4,040,330	4,042,124	4,044,285	4,045,505	4,046,315	4,048,755
4,008,714	4,032,355	4,040,337	4,042,256	4,044,349	4,045,571	4,046,442	4,048,929
4,009,414	4,032,900	4,040,741	4,042,321	4,044,385	4,045,581	4,046,452	4,049,100
4,010,150	4,033,550	4,040,762	4,042,520	4,044,465	4,045,591	4,046,458	4,049,134
4,010,452	4,033,564	4,040,809	4,042,531	4,044,481	4,045,601	4,046,514	4,049,227
4,013,359	4,033,649	4,040,852	4,042,535	4,044,591	4,045,644	4,046,563	4,049,252
4,014,392	4,033,929	4,040,921	4,042,718	4,044,629	4,045,658	4,046,719	4,049,408
4,014,909	4,034,320	4,040,961	4,042,752	4,044,639	4,045,690	4,046,878	4,049,460
4,020,060	4,036,211	4,041,085	4,042,778	4,044,644	4,045,729	4,047,263	4,049,486
4,022,508	4,037,737	4,041,208	4,043,035	4,044,681	4,045,754	4,047,468	4,051,195
4,025,357	4,038,197	4,041,393	4,043,207	4,044,715	4,045,836	4,047,620	4,051,281
4,025,459	4,038,725	4,041,448	4,043,245	4,044,783	4,045,900	4,047,639	

Adverse Decisions in Interferences

In the designated interferences involving the indicated claims of the following patents, final decisions have been rendered that the respective patentees were not the first inventors with respect to the claims listed.

Patent No. 3,561,449, F. A. Bellantoni, CUTTER TOOL, Interference No. 98,735, decided July 22, 1977, claims 1, 2 and 3.

Patent No. 3,698,790, P. J. Berry, STABILISED OPTICAL SYSTEMS, Interference No. 99,323, decided July 25, 1977, claims 1 and 3.

Patent No. 3,787,356, J. A. Gourse, FIRE RETARDANT COMPOSITIONS, Interference No. 98,782, decided July 20, 1977, claims 1–6.

Patent No. 3,806,901, C. F. Buhrer, RAPID ACCESS CYLINDRICAL MAGNETIC DOMAIN MEMORY, Interference No. 99,196, decided Sept. 1, 1977, claims 5 and 6.

Patent No. 3,824,086, W. M. Perry and W. S. Perry, BY-PASS FIBER COLLECTION SYSTEM, Interference No. 98,964, decided Aug. 24, 1977, claims 1–6 and 8.

Patent No. 3,847,987, R. Boesch, PHENYLHYDRAZONE DERIVATIVES, Interference No. 99,552, decided Sept. 19, 1977, claims 1, 2 and 4–10.

Patent No. 3,865,110, R. F. Traverse, DIAPER AND INTEGRAL EVERSION CONTAINER, Interference No. 99,547, decided Aug. 24, 1977, claim 1.

Patent No. 3,890,288, W. Vogt, E. Fischer and E. Auer, PROCESS FOR MAKING POLY-ALPHA-OXYACRYLIC ACID AND ITS ALKALI METAL SALTS, Interference No. 99,521, decided Aug. 5, 1977, claims 1, 3, 11 and 12.

Patent No.3,913,603, J. Torres, CRASHWORTHY FLAPPER VALVE, Interference No. 99,401, decided Aug. 19, 1977, claims 1–3, 5, 6, 8–14, 18 and 21.

Patent No. 3,923,795, D. O. Spry, 2-ALKOXYCEPHALOSPORINS, Interference No. 99,516, decided Aug. 10, 1977, claim 6.

Patent No. 3,959,375, S. Ogawa and T. Suami, 2,5-DIDEOXYSTREPTAMINE AND THE PRODUCTION THEREOF, Interference No. 99,533, decided Aug. 29, 1977, claims 1–4 and 6.

Patent No. 3,968,377, J. P. Farrell, BEAM SPLITTING TO IMPROVE TARGET LIFE IN NEUTRON GENERATORS, Interference No. 99,481, decided Sept. 22, 1977, claims 1, 7, 8, 9 and 10.

PATENT EXAMINING CORPS

RENE D. TEGTMEYER, Assistant Commissioner

WILLIAM FELDMAN, Deputy Assistant Commissioner

CONDITION OF PATENT APPLICATIONS AS OF DECEMBER 3, 1977

PATENT EXAMINING GROUPS	Actual Filing Date of Oldest New Case Awaiting Action
CHEMICAL EXAMINING GROUPS	
GENERAL CHEMISTRY AND PETROLEUM CHEMISTRY, GROUP 110—S. N. ZAHARNA, Director. Inorganic Compounds; Inorganic Compositions; Organo-Metal and Organo-Metalloid Chemistry; Metallurgy; Metal Stock; Electro Chemistry; Batteries; Hydrocarbons; Mineral Oil Technology; Lubricating Compositions; Gaseous Compositions; Fuel and Igniting Devices.	5-3-77
GENERAL ORGANIC CHEMISTRY, GROUP 120—A. L. LEAVITT, Director. Heterocyclic, Amides; Alkaloids; Azo; Sulfur; Misc. Esters; Carbohydrates; Herbicides; Poisons; Medicines; Cosmetics; Steroids; Oxo and Oxy; Quinones; Acids; Carboxylic Acid Esters; Acid Anhydrides; Acid Halides.	1-21-77
HIGH POLYMER CHEMISTRY, PLASTICS AND MOLDING, GROUP 140—A. P. KENT, Director. Synthetic Resins; Rubber; Proteins; Macromolecular Carbohydrates; Mixed Synthetic Resin Compositions; Synthetic Resins With Natural Polymers and Resins; Natural Resins; Reclaiming; Pore-Forming; Compositions (Part) e.g.: Coating; Molding; Ink; Adhesive and Abrading Compositions; Molding, Shaping, and Treating Processes.	2-7-77
COATING AND LAMINATING, BLEACHING, DYEING AND PHOTOGRAPHY, GROUP 160—R. FRIEDMAN, Director. Coating; Processes and Misc. Products; Laminating Methods and Apparatus; Stock Materials; Adhesive Bonding; Special Chemical Manufactures; Special Utility Compositions; Bleaching; Dyeing and Photography.	12-6-76
SPECIALIZED CHEMICAL INDUSTRIES AND CHEMICAL ENGINEERING, GROUP 170—H. S. VINCENT, Director. Fertilizers; Foods; Fermentation; Analytical Chemistry; Reactors; Sugar and Starch; Paper Making; Glass Manufacture; Gas; Heating and Illuminating; Cleaning Processes; Liquid Purification; Distillation; Preserving; Liquid, Gas, and Solid Separation; Gas and Liquid Contact Apparatus; Refrigeration; Concentrative Evaporators; Mineral Oils Apparatus; Misc. Physical Processes.	11-3-76
ELECTRICAL EXAMINING GROUPS	
INDUSTRIAL ELECTRONICS, PHYSICS AND RELATED ELEMENTS, GROUP 210—W. L. CARLSON, Director. Generation and Utilization; General Applications; Conversion and Distribution; Heating and Related Art Conductors; Switches; Photography; Motion Pictures; Illumination; Horology; Acoustics; Recorders; Weighing Scales.	8-18-76
SPECIAL LAWS ADMINISTRATION, GROUP 220—C. D. QUARFORTH, Director. Ordnance, Firearms and Ammunition; Radar, Underwater Signalling, Directional Radio, Torpedoes, Seismic Exploring, Radio-Active Batteries; Nuclear Reactors, Powder Metallurgy, Rocket Fuels; Radio-Active Material.	7-8-76
INFORMATION TRANSMISSION, STORAGE AND RETRIEVAL, GROUP 230—J. F. COUCH, Director. Communications; Multiplexing Techniques; Facsimile; Data Processing, Computation and Conversion; Storage Devices and Related Arts.	1-24-77
RECEPTACLES, SANITATION AND CLEANING, WINDING, AND MEASURING, GROUP 240—N. ANSHER, Director. Receptacles; Joint Packing; Conduits; Plumbing Fixtures; Textile Spinning; Food; Agitating; Cleaning; Pressing; Geometrical Instruments; Sound Recording; Winding and Reeling; Measuring and Testing; Indicating.	1-5-77
ELECTRONIC COMPONENT SYSTEMS AND DEVICES, GROUP 250—L. FORMAN, Director. Semi-Conductor and Space Discharge Systems and Devices; Electronic Component Circuits; Wave Transmission Lines and Networks; Optics; Radiant Energy; Measuring.	9-3-76
DESIGNS, GROUP 290—C. D. QUARFORTH, Director. Industrial Arts; Household, Personal and Fine Arts.	5-6-76
MECHANICAL EXAMINING GROUPS	
HANDLING AND TRANSPORTING MEDIA, GROUP 310—D. J. STOCKING, Director. Conveyors; Hoists; Elevators; Article Handling Implements; Store Service; Sheet and Web Feeding; Dispensing; Fluid Sprinkling; Fire Extinguishers; Coin Handling; Check Controlled Apparatus; Classifying and Assorting Solids; Boats; Ships; Aeronautics; Motor and Land Vehicles and Appurtenances; Brakes; Railways and Railway Equipment.	10-15-76
MATERIAL SHAPING, ARTICLE MANUFACTURING, TOOLS, GROUP 320—S. S. MATTHEWS, Director. Manufacturing Processes, Assembling, Combined Machines, Special Article Making; Metal Deforming; Sheet Metal and Wire Working; Metal Fusion—Bonding, Metal Founding; Metallurgical Apparatus: Plastics Working Apparatus; Plastic Block and Earthenware Apparatus: Machine Tools for Shaping or Dividing; Work and Tool Holders, Woodworking; Tools; Cutlery; Jacks.	4-1-77
AMUSEMENT, HUSBANDRY, PERSONAL TREATMENT, INFORMATION, GROUP 330—G. M. FORLENZA, Director. Amusement and Exercising Devices; Projectors; Animal and Plant Husbandry; Butchering; Earth Working and Excavating; Fishing, etc.; Tobacco; Artificial Body Members; Dentistry; Jewelry; Surgery; Toiletry; Printing; Typewriters; Stationery; Information Dissemination.	11-8-76
HEAT, POWER, AND FLUID ENGINEERING, GROUP 340—B. R. GAY, Director. Power Plants; Combustion Engines; Fluid Motors; Reaction Motors; Pumps; Rotary Engines and Pumps; Heat Generation and Exchange; Refrigeration; Ventilation; Drying; Temperature and Humidity Regulation; Machine Elements; Couplings; Gearing; Bearings; Clutches; Power Transmission; Fluid Handling and Control; Lubrication.	12-2-76
GENERAL CONSTRUCTIONS, TEXTILES AND MINING, GROUP 350—M. M. NEWMAN, Director. Joints; Fasteners; Rod, Pipe and Electrical Connectors: Miscellaneous Hardware; Locks; Building Structures: Closure Operators; Bridges; Closures; Earth Engineering; Drilling; Mining; Furniture; Supports; Cabinet Structures; Centrifugal Separations; Coating; Textiles; Apparel and Shoes; Sewing Machines.	4-1-77

Expiration of patents: The patents within the range of numbers indicated below expire during December 1977, except those which may have expired earlier due to shortened terms under the provisions of Public Law 690, 79th Congress, approved August 8, 1946 (60 Stat. 940) and Public Law 619, 83rd Congress, approved August 23, 1954 (68 Stat. 764), or which may have had their terms curtailed by disclaimer under the provisions of 35 U.S.C. 253. Other patents, issued after the dates of the range of numbers indicated below, may have expired before the full term of 17 years for the same reasons, or have lapsed under the provisions of 35 U.S.C. 151.

Patents .... Numbers 2,962,719 to 2,966,680, inclusive
Plant Patents .... Numbers 1,991 to 2,008, inclusive

REISSUE PATENTS

GRANTED DECEMBER 20, 1976

ERRATA

For CLASS	See PATENT NO.
366–025	9,496

REISSUES

DECEMBER 20, 1977

Matter enclosed in heavy brackets [ ] appears in the original patent but forms no part of this reissue specification; matter printed in italics indicates additions made by reissue.

Re. 29,496

APPARATUS FOR MAKING HOT ASPHALT PAVING MATERIAL

Michael Dydzyk, Athens, Greece, assignor to Thomas I. Baldwin; Frank P. Scrivener and William E. Baldwin, all of Millersville, Md., part interest to each

Original No. 3,866,888, dated Feb. 18, 1975, Ser. No. 326,730, Jan. 26, 1973. Application for reissue Feb. 17, 1977, Ser. No. 769,473

Int. Cl.^{2} B28C ***1/22***

U.S. Cl. 366—25 **10 Claims**

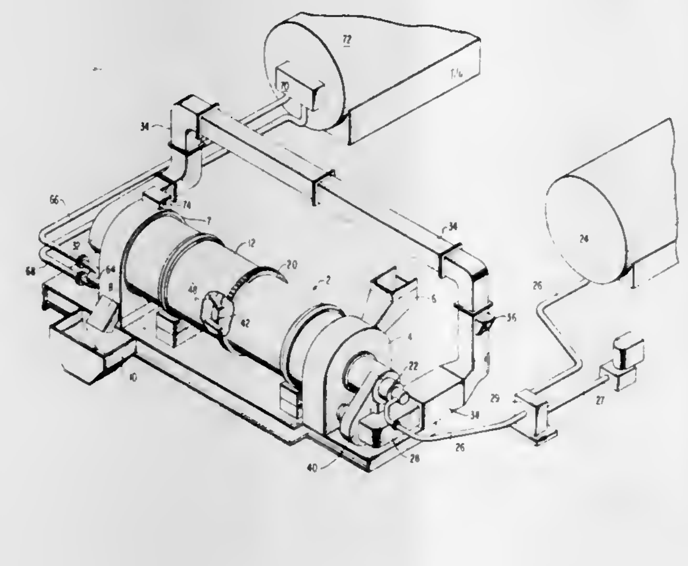

1. Apparatus for making asphalt paving material from a particulate aggregate material and asphalt, comprising,
a rotary drum having an inlet and an outlet end,
means for rotating the drum about its longitudinal axis,
said drum having a drying section extending inwardly from the inlet end thereof and a mixing section extending inwardly from the outlet end thereof,
burner means for directing a flame into the drying section,
means for lifting the aggregate material in the drying section and releasing the material so lifted downwardly through the area heated by the flame for removal of moisture,
a heat shield located within the drum in axial alignment with the flame,
said heat shield defining the downstream end of the drying section and the upstream end of the mixing section,
an opening in the plane of the shield permitting the flow of aggregate material from the drying section to the mixing section,
means in the mixing section for introducing hot asphalt into the aggregate material,
agitator means in the mixing section for agitating and mixing together the asphalt and aggregate material,
means for withdrawing exhaust gases from the mixing section, and
recirculation means for returning the exhaust gases and airborne solid particles therein to the drying section at the inlet end of the rotary drum whereby the heat and combustible constituents of the exhaust gases aid the combustion process in the drying section and the airborne solid particles are removed from the gases upon contact with the hot asphalt in the mixing section.

Re. 29,497

PISTON ROD SEAL FOR ADJUSTABLE PNEUMATIC SPRING

Herbert Freitag, Koblenz-Metternich, Germany, assignor to Stabilus GmbH, Koblenz-Neuendorf, Germany

Original No. 3,856,287, dated Dec. 24, 1974, Ser. No. 371,768, June 20, 1973. Application for reissue Mar. 22, 1976, Ser. No. 669,108

Claims priority, application Germany, June 24, 1972, 2231050

Int. Cl.^{2} F16F ***5/00***

U.S. Cl. 267—64 R **15 Claims**

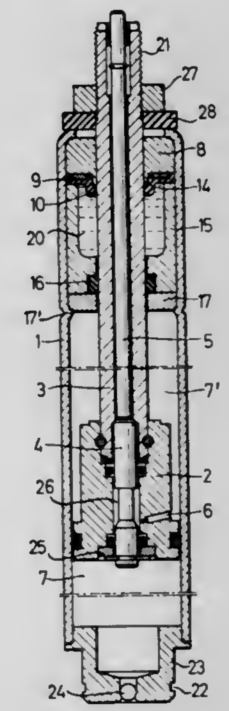

1. A pneumatic spring comprising:
a. a cylinder having an axis and bounding a cavity therein;
b. a piston axially slidable in said cavity and separating two compartments of said cavity;
c. valve means operatively interposed between said compartments;
d. valve operating means accessible outside said cavity for moving said valve means toward and away from an open position in which said valve means connects said compartments;
e. a piston rod fixedly fastened to said piston and axially extending therefrom outward of said cavity, said cylinder including an end wall transverse to said axis and formed with an aperture for passage of said piston rod;
f. fluid filling said cavity; and
g. sealing means interposed between said end wall and said piston rod for preventing escape of fluid through said aperture, said sealing means including:
1. a rigid tubular member substantially coaxially enveloping said piston rod with sufficient clearance to permit free axial movement of said piston rod through said tubular member,
2. a sealing member of resilient material formed with an opening therethrough, said [tubular] *sealing* member having a first axial portion enveloping said rigid tubular member and a second axial portion extending axially beyond said tubular member in a direction inward of said cavity,
3. said second portion having a radially outer, axially extending face radially spaced from said cylinder and exposed to said fluid,
4. the radially innermost part of said second portion constituting a lip portion, said lip portion being the only

part of said sealing member frictionally engaging said piston rod.

Re. 29,498

PROCESS FOR THE ENZYMATIC DETERMINATION OF GLUCOSE WITH A GLUCOSE-OXYDAZED/PEROXIDAZED ENZYME SYSTEM

Franco Meiattini, Siena, Italy, assignor to Istituto Sieroterapico e Vaccinogeno Toscano "SCLAVO", S.p.A., Siena, Italy

Original No. 3,886,045, dated May 27, 1975, Ser. No. 360,372, May 11, 1973. Application for reissue Mar. 2, 1976, Ser. No. 663,248

Claims priority, application Italy, May 12, 1972, 9480/72

Int. Cl.² G01N *31/14;* C07G *7/02*

U.S. Cl. 195—103.5 C 17 Claims

1. A process for the enzymatic determination of the amount of glucose present in body fluids which comprises the steps:

i. adding to a sample of a body fluid an enzymatic system containing glucose-oxidase and peroxidase, to which has been added sodium or potassium ferrocyanide,

ii. incubating the sample and enzyme system at room temperature whereby the ferrocyanide is converted to ferricyanide equivalent to the amount of glucose present in the sample, and

iii. reacting the ferricyanide with a reducing system which forms a colored product on oxidation, the color being a measure of the ferricyanide present, said reducing system consisting of a phenolic compound and an aminoantipyrine.

Re. 29,499

ON PREMISE TELEPHONE LOOP TESTER

Lucian W. Spencer, Arlington, Tex., assignor to Reliance Telecommunication Electronics Company, Euless, Tex.

Original No. 3,739,107, dated June 12, 1973, Ser. No. 80,380, Oct. 13, 1970. Application for reissue June 5, 1975, Ser. No. 584,065

Int. Cl.² H04B *3/46*

U.S. Cl. 179—175.3 R 18 Claims

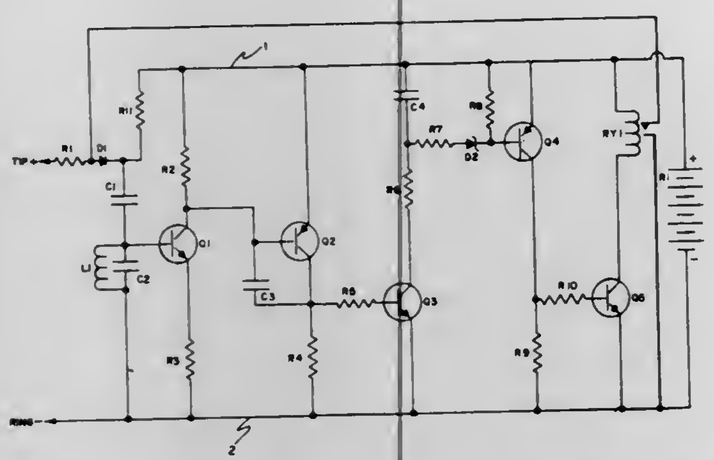

1. A telephone loop tester comprising first and second conductors adapted to be electrically connected by a talking pair of conductors of a telephone transmisson line to a central office in a telephone transmission system that has a telephone set connected to said central office by said transmission line, and circuit means connected to said first and second conductors and responsive to the application of a predetermined, central office-transmitted signal to said first and second conductors for electrically simulating an off hook condition of said telephone set without disconnecting said telephone set from said central office by completing a current conducting path between said talking pair of conductors at a location that is remote from said central office[.], *said predetermined signal having a preselected frequency, and means for rendering said circuit means non-responsive to signals having said pre-selected frequency in response to the transfer of said telephone set to its off hook state.*

Re. 29,500

SCANNING CHARGED BEAM PARTICLE BEAM MICROSCOPE

Walter Hoppe, Munich, Germany, assignor to Max-Planck-Gesellschaft zur Förderung der Wissenschaften e.V., Germany

Original No. 3,857,034, dated Dec. 24, 1974, Ser. No. 358,080, May 7, 1973. Continuation of Ser. No. 161,137, July 9, 1971, abandoned. Application for reissue Aug. 2, 1976, Ser. No. 710,420

Claims priority, application Germany, Aug. 31, 1970, 2043749

Int. Cl.² H01J *37/26;* G01N *23/00*

U.S. Cl. 250—311 9 Claims

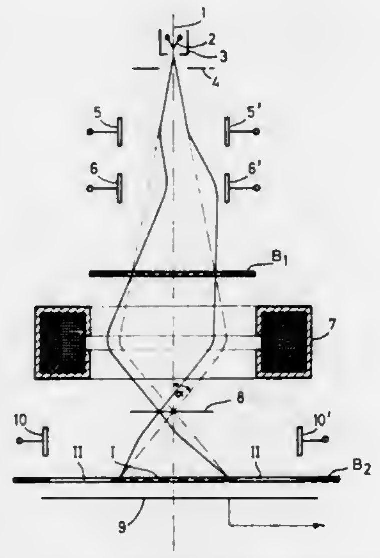

1. A scanning charged particle beam microscope comprising a charged particle beam generator for generating a beam having a radiation cone having a primary longitudinal beam axis extending between said generator and a specimen, as system adjacent said generator for deflecting said beam perpendicular to the axis in accordance with a set of raster coordinates, a charged particle beam optical condenser lens disposed about said axis for focusing the beam into a small spot in the plane of said specimen for scanning thereof, said lens being disposed between said [deflecting system] *beam generator* and said specimen, a detector arrangement for providing a signal of those portions of the beam which are scattered when the specimen is irradiated, said detector being disposed about the axis under said specimen, and an aperture combination arrangement having dimension independent of the size of the radiation cone through said condenser lens, said aperture combination comprising a first, input aperture disposed about the beam axis between said [deflecting system] *beam generator* and said [condenser lens] *specimen,* and a second output aperture between said specimen and said detector complementary to said first aperture and having a first inner portion which is radiation opaque with respect to the unscattered portions of the beam complementary to said input aperture and permeable to the scattered portions of the beam and a second outer portion having a portion totally permeable in respect to scattered charged particles, the areas of said first aperture and the complementary areas of the first portion of said second aperture being ring-shaped and concentric, the outer portion of the output aperture having a radial width at least equal to one half of the radius of the inner portion whereby the ratio between primary radiation intensity and detected scattered radiation is improved for the wide primary radiation cone required for high resolution and least possible radiation loading of the specimen.

PLANT PATENTS

GRANTED DECEMBER 20, 1977

Illustrations for plant patents are usually in color and therefore it is not practicable to reproduce the drawing.

4,166

APPLE TREE

Zeb Kenneth Howell, Zillah, Wash., assignor to Claud Callahan and Marjorie McCormick, both of Yakima, Wash.

Filed Nov. 15, 1976, Ser. No. 742,528

Int. Cl.² A01H *5/03*

U.S. Cl. Plt.—34 1 Claim

1. A new and distinct variety of Apple tree, substantially as herein shown and described, characterized particularly as to novelty by the unique combination of wide angle limb structure, large dark green leaves, long sleek shape similar to Starkrimson Red Delicious and as compared to Starkspur Golden Delicious, five distinct points similar to Starkrimson Red Delicious, the smooth skin free of russet, the abundant juice even when the fruit is green, with early sugar sweet flavor before Starkspur Golden but still permitting harvest two weeks after Starkspur, and thus extending harvest season, with ability to keep long in ordinary refrigeration, with blossoms larger and darker pink than Starkspur, with very hardy buds and blossoms being freeze resistant; the fruit being firmer and pressure testing at harvest 19 lbs. to 22½ lbs. and sugar testing 11½–13% S.S., with extreme resistance to bruising and the abundant fruit clusters with long fruit stems, the variety being very resistant to mildew as compared to other known varieties.

4,167

ROSE PLANT

William A. Warriner, Tustin, Calif., assignor to Jackson & Perkins Co., Medford, Oreg.

Filed Nov. 26, 1976, Ser. No. 745,459

Int. Cl.² A01H *5/00*

U.S. Cl. Plt.—14 1 Claim

1. A new and distinct cultivar of rose plant of the hybrid tea class, substantially as herein shown and described, characterized particularly as to novelty by the unique combination of a vigorous upright habit of growth, Garnette Brown new foliage maturing to dark green, nearly white buds with a tint of Egyptian Buff and tipped with Carmine, opening to white blooms of 18 to 25 petals, large prickles angled slightly downward and a light fragrance.

4,168

ROSE PLANT

Ernest Schwartz, Kingsville, Md., assignor to F. Harmon Saville, Nor'East Miniature Roses, Rowley, Mass.

Filed Jan. 21, 1977, Ser. No. 760,918

Int. Cl.² A01H *5/00*

U.S. Cl. Plt.—8 1 Claim

1. A new and distinct variety of rose plant of the miniature class, substantially as shown and described, characterized particularly by high centered, recurrent flowers of persistent yellow coloring borne primarily singly to a stem, on any petalled flowers which open well under varied weather conditions and are long lasting on the plant and as cut flowers grown on a vigorous but compact growing plant with abundant foliage and virtually no thorns.

PATENTS

GRANTED DECEMBER 20, 1976

ERRATA

For CLASS	See PATENT NO.
037–129	4,063,361
339–119 R	4,063,683
366–187	4,063,715
366–100	4,063,716
366–075	4,063,717
366–075	4,063,718
296–023 R	4,063,762
029–578	4,063,901
029–623.2	4,063,902
051–289 R	4,063,906
051–413	4,063,910
260–045.75 B	4,063,984
544–026	4,064,122
544–142	4,064,123
548–344	4,064,138
560–053	4,064,160
526–320	4,064,161
560–234	4,064,162
235–062 A	4,064,388
235–431	4,064,389
364–492	4,064,392
364–414	4,064,393
364–107	4,064,394
364–107	4,064,395
364–573	4,064,396
364–724	4,064,397
364–709	4,064,398
364–709	4,064,399
364–746	4,064,400
364–716	4,064,421
364–841	4,064,422
364–718	4,064,423
362–231	4,064,424
362–033	4,064,425
362–226	4,064,426
362–096	4,064,427
362–034	4,064,428
362–102	4,064,429
362–231	4,064,430
362–004	4,064,431
362–457	4,064,432
362–330	4,064,433
364–200	4,064,489
364–200	4,064,490
365–149	4,064,491
365–184	4,064,492
365–096	4,064,493
365–049	4,064,494
364–103	4,064,495
365–019	4,064,496

PATENTS

GRANTED DECEMBER 20, 1977

GENERAL AND MECHANICAL

4,063,312
BUTTON SECURING DEVICE
Pierre Braillard, 29 rue de la Coulouvreniere, 1211 Geneva 11, Switzerland
Filed June 23, 1976, Ser. No. 699,153
Claims priority, application Switzerland, June 26, 1975, 8342/75; Feb. 25, 1976, 2314/76
Int. Cl.^{2} D05B *3/14*
U.S. Cl. 2—265 **10 Claims**

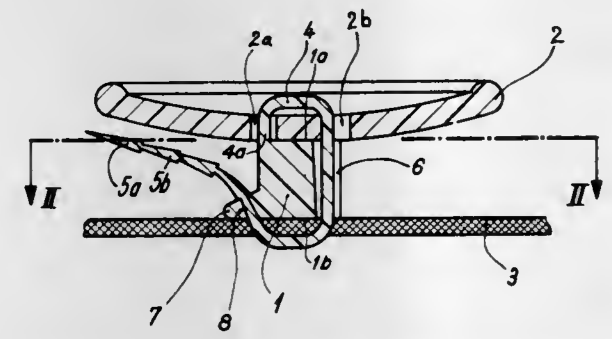

1. A button-securing device comprising; a button-spacing piece having two mutually opposite, parallel, openly exposed faces, one for contacting a button and the other for contacting a fabric; and a flexible elongate attachment number integrally extending from an attachment portion of the button spacing piece, the button-spacing piece having an opening for receiving an end portion of the attachment member remote from the attachment portion and for holding the so-received attachment in a looped configuration to secure the so-contacted button to the so-contacted fabric.

4,063,313
BELT APPARATUS FOR COVERING BELT LOOPS
Frederick K. Hagios, 120 Ridgeview Circle, Princeton, N.J. 08540
Filed Nov. 15, 1976, Ser. No. 742,044
Int. Cl.^{2} A41F *3/02*
U.S. Cl. 2—338 **10 Claims**

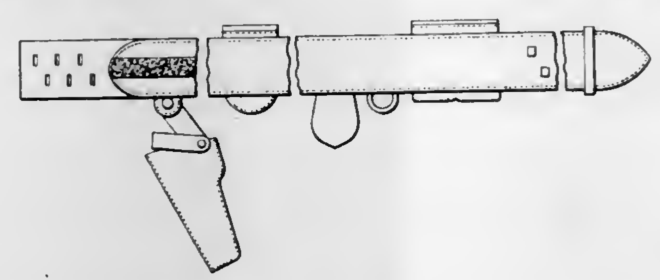

1. A belt apparatus for covering the belt loops of a garment, said apparatus comprising:
an inner belt means for engaging the belt loops of said garment, said inner belt means having a predetermined width and comprising a material having substantial rigidity in at least one dimension;
an outer belt means having a width greater than the predetermined width of said inner belt means and adapted to substantially surround said inner belt means;
a first discrete attaching means for attaching said inner belt means to said outer belt means, said first discrete attaching means being located approximately in the middle of said inner and outer belt means respectively;
a second discrete attaching means attached to said inner belt means and located at one end thereof;
a third discrete attaching means attached to said inner belt means and located at the opposite end of said inner belt means from said second discrete attaching means;
a pair of complementary attaching means attached to said outer belt means and adapted to mate with said second and third discrete attaching means respectively; and,
a buckle means for securing said outer belt means relative to itself.

4,063,314
TOTAL WRIST JOINT PROSTHESIS
Antonio Guillermo Loda, Galileo 2446, Buenos Aires, Argentina
Filed July 12, 1976, Ser. No. 704,484
Claims priority, application Argentina, July 15, 1975, 259753; July 2, 1976, 263831
Int. Cl.^{2} A61F *1/24*
U.S. Cl. 3—1.91 **6 Claims**

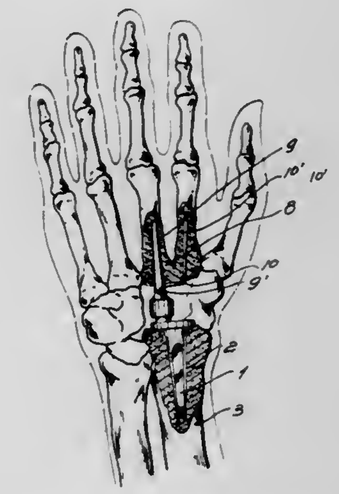

1. A total wrist prosthesis of the type which is permanently included by surgery between the hand and the forearm with osteotomy of the carpus, comprising a stem having a section and length adequate for its nailing in the radial bone, a substantially rectangular plane base from one face of which said stem projects, a support arranged on the opposite face of said base displaced from the axial axis of said stem, a rotula articulated in said support, a second stem projecting in the opposite direction from said first stem connected with said rotula and nailable in the third metacarpal bone and in the capitate bone, and a thin cylindrical stem projecting from the neck of said second stem bent at an angle at a convenient distance from said second stem so as to provide a substantially parallel sector to said second stem allowing rotational movement.

4,063,315
VACUUM TOILET SYSTEM
Raymond Jerome Carolan, Seattle, and Bjorn Roar Kristoffersen, Kirkland, both of Wash., assignors to The Boeing Company, Seattle, Wash.
Division of Ser. No. 532,569, Dec. 13, 1974, Pat. No. 3,995,328. This application Aug. 16, 1976, Ser. No. 714,928
Int. Cl.^{2} E03D *5/016*
U.S. Cl. 4—10 **5 Claims**

1. A method for filtering toilet bowl waste matter in an aircraft having a pressurized hull enclosing a passenger compartment, and recirculating the filtered liquid for flushing the toilet bowl, comprising the steps of: mounting the toilet bowl having a valve controlled outlet, within the pressurized hull enclosing the passenger compartment of the aircraft; locating a central collection waste holding tank outside of the pressurized hull for establishing a pressure differential therebetween; dividing the waste holding tank by a filter element into a waste receiving compartment and a filtered liquid compartment; interconnecting the toilet bowl outlet valve with the waste receiving compartment of the waste holding tank; venting both the waste receiving compartment and the filtered liquid com-

partment of the waste holding tank to the outside ambient air pressure for producing a pressure differential between the interior of the waste holding tank and the pressurized passenger compartment containing the toilet bowl when the aircraft is above a predetermined altitude; connecting both the waste receiving compartment and the filtered liquid compartment of the waste holding tank to a vacuum pump for producing a pressure differential between the interior of the waste holding tank and the pressurized passenger compartment containing the toilet bowl when the aircraft is below said predetermined altitude; withdrawing fluid from the bottom of the filtered liquid compartment, and storing the fluid under pressure in an

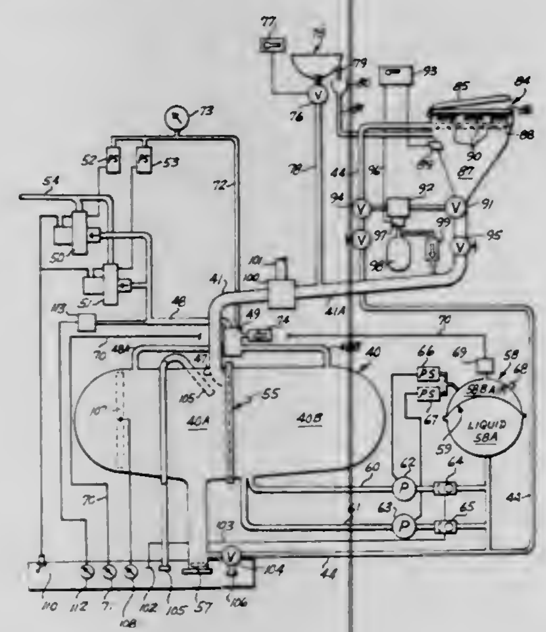

accumulator tank for use as flushing fluid; actuating an automatically time controlled flush cycle, for releasing the pressurized filtered flushing fluid from the accumulator tank through spray means mounted in the upper portion of the toilet bowl, in combination with opening the toilet bowl outlet valve for removing the waste and flushing liquid through the differential pressure acting upon it between the pressurized passenger compartment and the waste holding tank; and venting the toilet bowl to admit air from the pressurized passenger compartment into the interior of the toilet bowl for preventing the application of a suction force to the user during the vacuum flush cycle.

4,063,316
TOILET SEAT CLEANING SYSTEM
Kurt Hünninghaus, Gewerbestr. 51, 7803 Gundelfingen, Germany
Filed Nov. 25, 1975, Ser. No. 635,154
Claims priority, application Germany, Nov. 27, 1974, 2456020
Int. Cl.² A47K *13/00, 13/24, 13/30, 17/00*
U.S. Cl. 4—233 **35 Claims**

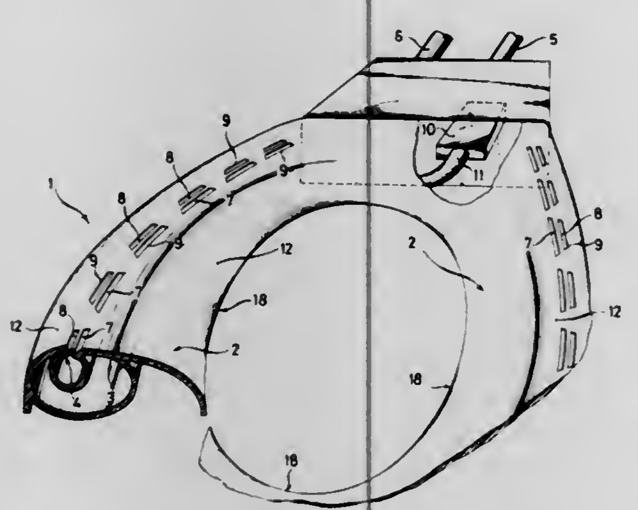

1. In a toilet having a toilet seat, a fluidic system for cleaning the toilet seat comprising conveying means for conveying fluids and for passing the fluids over the toilet seat, said conveying means comprising at least one conduit for conveying fluids, said conduit being provided with a plurality of outlets connecting said conduit with the exterior of the toilet seat and positioned so as to direct fluid flow over the toilet seat; and propelling means connected to said conduit and operative for driving fluids into said conduit and out said outlets and over the toilet seat to clean the latter.

4,063,317
HYDRO-PNEUMATIC PIPE, TUBE AND DRAIN CLEANER
Michael Santore, 150 Bergen Turnpike, Ridgefield Park, N.J. 07660
Filed Nov. 13, 1975, Ser. No. 631,738
Int. Cl.² E03D *11/00;* **B08B** *9/02*
U.S. Cl. 4—255 **2 Claims**

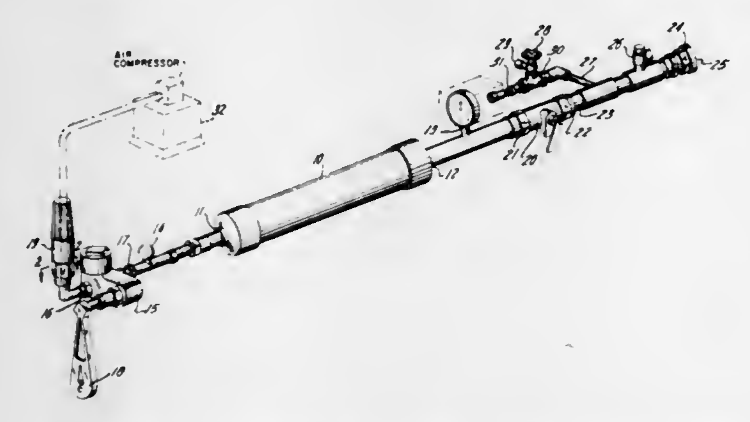

1. Apparatus for cleaning clogged pipes, tubes, drains and other conduits, comprising:
a. a gas receiving and storage chamber having an inlet and an outlet and a pressure gauge disposed therein for indicating gas pressure in said chamber;
b. a check valve connected to said inlet of said chamber to prevent back-flow of gas from said chamber when pressurized;
c. an inlet control valve having an inlet and an outlet connected to said check valve for controlling the flow of pressurized gas to said chamber;
d. A removable carbon dioxide cartridge holder disposed in said inlet of said inlet control valve for receiving a series of carbon dioxide cartridges;
e. means disposed in said carbon dioxide cartridge holder for releasing the contents of said cartridges into said chamber;
f. a discharge control valve having an inlet and an outlet, said inlet connected to the outlet of said storage chamber for controlling the flow of pressurized gas therefrom;
g. a primary discharge manifold having an upstream end and a downstream end, said upstream end connected to said outlet of said discharge control valve for receiving a flow of pressurized gas therefrom when said valve is open, and said downstream end having an adapter for connecting the apparatus to a conduit to be unclogged;
h. an automatic safety gas relief valve disposed in said primary discharge manifold downstream of said discharge control valve;
i. a secondary manifold connected to said primary discharge manifold intermediate said discharge control valve and said relief valve;
j. a liquid flow control valve having an inlet and an outlet connected to said secondary manifold whereby a source of liquid can flow through said valve, into said secondary and primary manifold, and into the conduit to be unclogged; and,
k. a secondary gas control valve disposed upstream of said liquid flow control valve in fluid flow communication with said secondary manifold whereby a source of secondary gas can flow through said valve, into said secondary and primary manifold, and into the conduit to be unclogged.

4,063,318
FOLDING FRAME ASSEMBLY
Oscar F. Nicholson, 320 Spencer St., Orlando, Fla. 32809
Filed Nov. 26, 1976, Ser. No. 745,064
Int. Cl.² A47C *21/00*
U.S. Cl. 5—327 R **1 Claim**

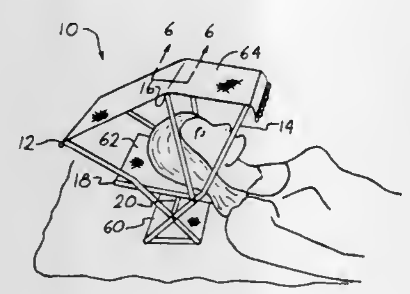

1. A facial cabana comprising in combination:
a one piece rectangular back frame having an ell bend therein;
a one piece rectangular front frame having an ell bend therein;
first connecting means movably connecting said front frame to said rear frame so as to be foldable towards each other with one said bend portion being foldable in the same direction as the other said bent portion
a support bar connected between said front frame and said back frame and connected thereto by said first connecting means;
a pair of U-shaped members each movably connected to said front frame by a second connecting means;
a pair of support fingers located on said back frame and adapted to have one of said pair of U-shaped members movable thereagainst to engage said support fingers in a generally horizontal position;
a flexible top connected to one end portion of said back frame member and to one end portion of said front frame member and to the other of said pair of U-shaped members to form a cover for a facial cabana frame;
a flexible portion attached to said other U-shaped member to form a head rest thereon; and
a third flexible member connected between the other ends of said front frame and back frame, whereby a facial cabana is formed with a rigid foldable frame.

4,063,319
BEDROLL FOR CONVERTIBLE BED
David L. Smith; Cary Frank, both of 345 W. Fullerton, Chicago, Ill. 60614; Mary Lupton, 505 N. Lake Shore Drive, Chicago, Ill. 60611, and Stephanie Lupton, 1100 N. Dearborn, Chicago, Ill. 60610
Filed Mar. 31, 1976, Ser. No. 672,351
Int. Cl.² A47G *9/00*
U.S. Cl. 5—334 R **5 Claims**

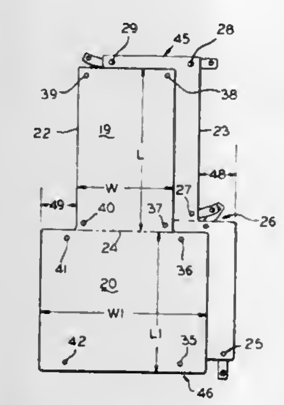

1. A bedroll having an appearance of a cylindrical sofa cushion when rolled and forming bed clothing when unrolled, said bedroll having at least two completely separate layers one of which forms insulating material with an outer covering of upholstery material and the other of which forms removable top and bottom washable sheets, a plurality of fastener means, the peripheries of said two layers being releasably secured together by said fasteners, said one of said layers forming an outer covering of upholstery material when said bedroll is rolled, whereby said cushion may either match or coordinate with upholstery on a sofa or other furniture and the other layer forming said removable washable sheeting which may be releasably attached around the entire periphery to said one layer, inserted into, used, and removed from the bedroll, the two layers having on each of the opposite ends of said bed roll a combined visible edge which includes only the upholstery material and thereby enables the bedding to be rolled, without necessarily appearing to be rolled bedding, each of said fasteners comprises a two-part fastener including a post and a snap attached to one of said layers and having a ribbon extending between the two parts, and mating means comprising a hole formed on the other of said two layers for enabling said ribbon to fold over a peripherial point on said other layer and for enabling the two parts of said fastener to be fastened together while capturing said mating means on said other layers, said hole formed in said other layer fitting over said post before said snap is snapped thereover, wherein each of said layers has a generally T-shaped configuration, said stem part of said T-shape folding over the cross arms of said T-shape and the extended portions of said cross arms folding over the extra body of said stem to give a smooth combined edge which rolls without giving the visual impression of a bedroll.

4,063,320
INFLATABLE BOAT
Henning Neumann, Germering, and Fritz Federer, Turkenfeld, both of Germany, assignors to Metzeler Kautschuk AG, Munich, Germany
Filed July 19, 1976, Ser. No. 706,212
Claims priority, application Germany, July 21, 1975, 2532542
Int. Cl.² B63B *7/08*
U.S. Cl. 9—2 A **18 Claims**

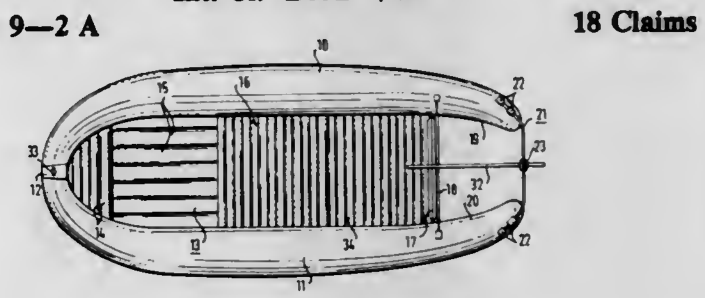

1. An inflatable boat, particularly for use on streams, comprising in combination an inflatable bottom elongated in a first direction and having a bow portion and a stern portion spaced from each other in said first direction; a stern bulkhead located aft of said stern portion of said bottom and extending in a second direction substantially transverse to said first direction; two lateral elements extending substantially in said first direction and spaced from each other in said second direction, said lateral elements being water-tightly connected to said bottom and said bulkhead and defining a compartment therewith, said lateral elements each having a first portion adjacent said bow portion of said bottom, and a second portion adjacent said stern portion of said bottom and spaced from said first portion in said first direction, said second portions of said lateral elements extending rearwardly beyond said stern bulkhead in said first direction, the first and second portions of one of said lateral elements substantially arcuately and gradually approaching towards the first and the second portions of the other lateral element, respectively, and the first and second portions of both lateral elements simultaneously being upwardly raised relative to the remainder of said lateral elements to substantially the same height; and two rigid connecting elements each connecting said first and second portions of one of said lateral elements to said first and said second portions of the other lateral element, respectively, substantially at the respective end sections thereof.

4,063,321
CHAIR SUPPORT FOR BOAT MOTOR CONTROLS
John H. Nichols, P.O. Box 267, Arnold, Mo. 63010
Filed Dec. 2, 1976, Ser. No. 746,860
Int. Cl.² B63B *29/00*
U.S. Cl. 9—7 **8 Claims**

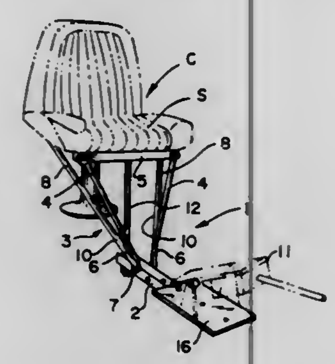

1. A support for use in cooperation with a fishing chair, and more particularly its seat, and provided for holding a boat motor foot operating control comprising a single arm means, a plate secured to approximately one end of said arm means and disposed for supporting the motor controls thereupon, a series of struts, said struts at their lower ends connecting to the said arm means, said struts at their upper ends connecting to the said chair, and said arm means having an adjustable fulcrum point at the location of its connection to the said struts, whereby the motor controls can be located approximately the length of the user's leg reach from the said chair seat.

4,063,322
HAWSER FLOAT ASSEMBLY
Peter John Tolan, Scituate, Mass., assignor to The B. F. Goodrich Company, Akron, Ohio
Filed Nov. 18, 1976, Ser. No. 742,979
Int. Cl.² B63B *21/04*
U.S. Cl. 9—8 R **8 Claims**

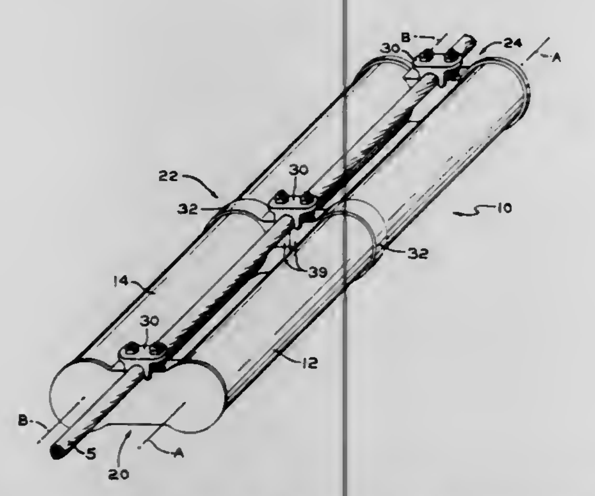

1. An assembly adapted to float a length of mooring hawser, said assembly comprising:
A. at least two buoyant, elongated, tubular members
1. spaced from each other and
2. disposed along substantially mutually parallel, longitudinal axes;
B. a plurality of longitudinally spaced hawser support members extending transversely between and interconnecting said tubular members, each of the support members comprising
1. laterally spaced end portions, each secured to a respective one of said tubular members to maintain said members in their spaced relationship, and
2. a bridging portion
a. extending between said end portions across the space between said tubular members and
b. having an upper surface adapted to support a portion of said hawser length equidistant between the longitudinal axes of said tubular members; and
C. means adapted to hold a portion of hawser length on each of said upper surfaces of said bridging portions.

4,063,323
RING BUOY WITH AUTOMATIC SEPARATION OF SMOKE SIGNAL BUOY FROM STROBE LIGHT BUOY
Robert M. Salvarezza, 110 Braemar Drive, Hillsborough, Calif. 94010
Filed Feb. 14, 1977, Ser. No. 768,333
Int. Cl.² B63C *9/18, 9/20, 9/22*
U.S. Cl. 9—14 **11 Claims**

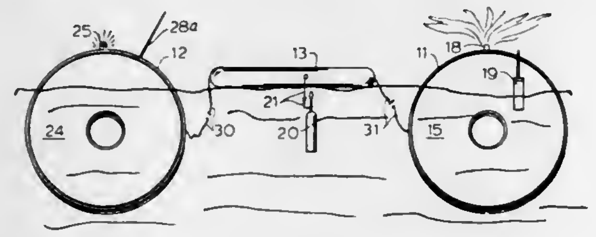

5. A ring buoy including in combination:
a plurality of ring buoy portions, one said portion being inflatable and another portion having signal means thereon,
inflation means for said inflatable portion,
ropes connecting said portions together,
locking means normally holding said portion together superposed into one ring buoy assembly, and
actuating means for causing, upon launching of said buoy, (1) said inflation means to inflate said inflatable portion and thereby force said locking means open and to separate said portions for separate flotation, and (2) initiation of said signal means.

4,063,324
FILM PROCESSING APPARATUS
Rodney G. Junge, Lakeland, Minn., assignor to Kroy Industries, Inc., Stillwater, Minn.
Filed Mar. 26, 1976, Ser. No. 670,980
Int. Cl.² G03D *3/13*
U.S. Cl. 15—100 **15 Claims**

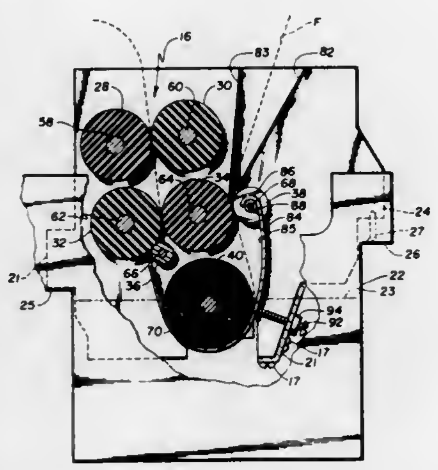

1. An apparatus for scrubbing the surface of a film comprising:
a reservoir for containing a scrubbing solution;
an elongated rotatable scrubbing roller;
an elongated arcuately shaped scrubbing plate adapted for at least partial submersion in said scrubbing solution, the inner surface of said plate being adjacent to and in scrubbing relationship with said scrubbing roller to thereby define a scrubbing station;
means for guiding the film in linear movement between said scrubbing roller and said plate; and
means for circulating said scrubbing solution between said reservoir and said scrubbing station comprising a plurality of holes disposed in said scrubbing plate such that said holes are adapted for at least partial submersion in said scrubbing solution.

4,063,325
SPLASH SHIELD ASSEMBLY FOR PAINT ROLLER
John F. Lizak, 920 Clydesdale St., McKeesport, Pa. 15135
Continuation-in-part of Ser. No. 617,281, Sept. 29, 1975, abandoned. This application Aug. 18, 1976, Ser. No. 715,282
Int. Cl.² B05C *17/02*
U.S. Cl. 15—230.11 **16 Claims**

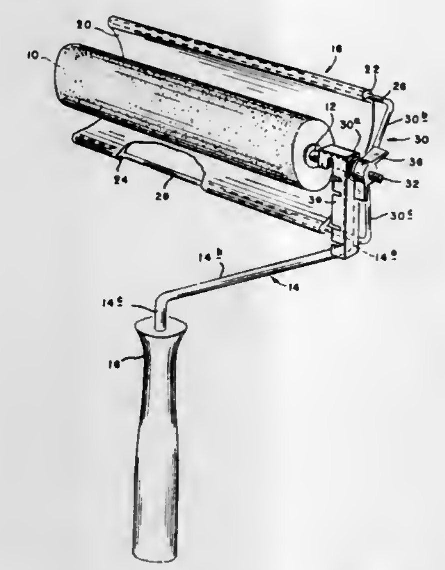

9. A splash shield assembly for a paint roller having a shaft and a radial handle member rigidly extending generally perpendicularly to the shaft from one end thereof, comprising
support means having a plurality of longigudinally extending generally parallel shield receiving members; connecting means including a hub section connected with the shield receiving members for removably securing said support means to the paint roller such that said hub section is generally coaxial with the shaft of the paint roller and the receiving members generally parallel with the shaft, said hub section constructed to be selectively rotated about the axis of of shaft of the paint roller; and a semicylindrical shield member shaped and sized to extend over a substantial length and periphery of the paint roller and removably received on said shield receiving membes.

4,063,326
VACUUM CLEANER SUCTION CONTROL
Charles T. Fromknecht, Anderson, S.C., assignor to The Singer Company, New York, N.Y.
Filed Nov. 12, 1976, Ser. No. 741,449
Int. Cl.² A47L *9/00*
U.S. Cl. 15—327 R **2 Claims**

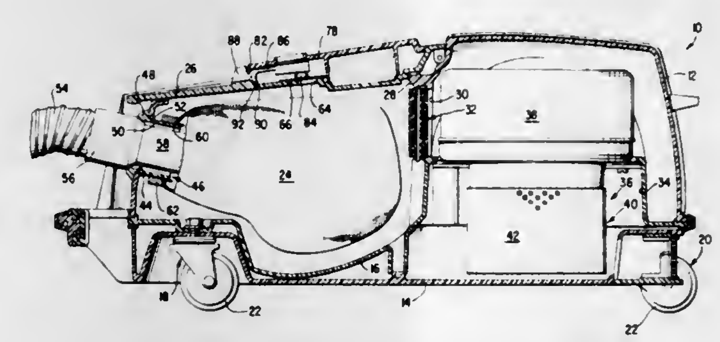

1. In a vacuum cleaner of the canister type comprising a housing having a filter compartment including an inlet and an outlet, a porous filter bag mounted in said filter compartment in flow communication with said inlet, means for creating sub-atmospheric pressure in said compartment and said bag for drawing dirt laden air through said inlet and discharging filtered air through said outlet, the improvement comprising a suction control for controlling the pressure in the filter compartment, said control comprising an aperture in said housing communicating said filter bag compartment with the exterior of said housing, a valve member, mounting means spaced from the aperture for pivotably mounting the valve member on the housing for movement in the plane of the aperture between positions covering and uncovering the aperture, and control means for selectively pivoting said valve member including an operator, means for constraining said operator for slidable movement in a path substantially parallel to said plane, a cam track formed on said valve skewed with respect to said path, and a stud secured to said operator and positioned on said track for pivoting said valve about the mounting means as said operator is moved in said path.

4,063,327
VEHICLE WASHING APPARATUS WITH IMPROVED REAR WASHER
Ivan J. Barber, Mississauga, Canada, assignor to The Allen Group, Inc., Melville, N.Y.
Filed May 7, 1976, Ser. No. 684,071
Int. Cl.² B60S *3/06*
U.S. Cl. 15—53 AB **10 Claims**

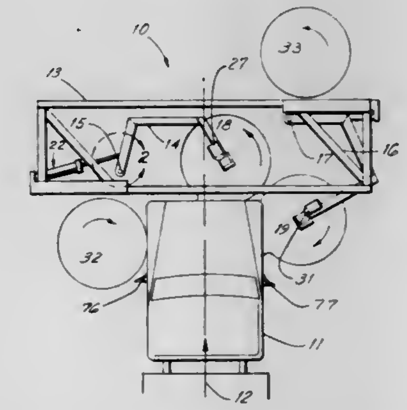

1. A vehicle washing apparatus for scrubbing a vehicle as it travels along a predetermined path, comprising:
a. a framework positioned across said path with an opening therethrough allowing passage of a vehicle;
b. a first arm rotatably mounted on said framework at one end on a first side of said path to normally project across said path toward the second and opposite side thereof while in a parked position and terminating in a free end rotatable forwardly across said path toward said first side;
c. a second arm rotatably mounted on said framework at one end on said second side of said path to normally project rearwardly while in a parked position and terminating in a free end which is rotatable toward said path from said parked position during a rear wash condition in which it swings inwardly toward said path and forwardly from said parked position;
d. first and second vertically extending rotary brushes mounted at the free ends of the respective first and second arms for rotation about respective vertical axes;
e. drive means for rotating said first and second brushes;
f. first biasing means connected to said first arm for biasing said first arm toward its parked position;
g. second biasing means connected to said second arm and operative upon receipt of a pressure signal to apply a predetermined force to said second arm tending to force said second arm toward said path and against a side of said vehicle and upon receipt of a rear wash signal to bias said second arm inwardly and forwardly with a rear wash force greater than said predetermined force;
h. side wash control means connected between said first arm and said second biasing means and operative upon forward movement of said first arm from its parked position to apply said pressure signal to said second biasing means to force said second rotary brush against a side of said vehicle passing along said predetermined path, whereby said second arm is held in contact therewith;

i. rear wash control means coupled between said second arm and said second biasing means and operative in response to movement of said second arm inwardly toward said path which occurs when said vehicle passes and its side no longer offers resistance to said predetermined force, to apply said rear wash signal to said second biasing means whereby said second biasing means applies said rear wash force to said second arm as said second arm moves inwardly toward said path, thereby, allowing said second rotary brush to maintain contact with the rear of a vehicle as it passes along said path.

4,063,328
LAMINATE SUPPORT FOR WINDSHIELD WIPER BLADES
Dario Arman, Via Veneria, 13./15, Druento (Turin), Italy (10040)
Filed Apr. 12, 1976, Ser. No. 675,866
Claims priority, application Italy, Apr. 11, 1975, 67940/75
Int. Cl.² B60S *1/04*
U.S. Cl. 15—250.42 **1 Claim**

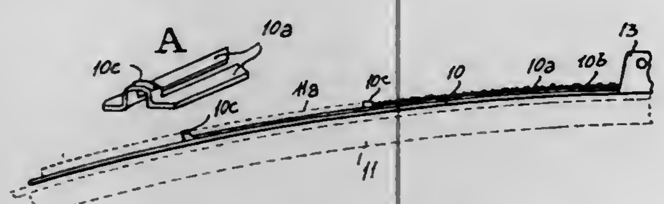

1. A support for wiper blades in windshield wiper installations on motor vehicles, comprising:
a molded plastic element curved as a leaf spring and elastically deformable in the longitudinal direction and having a thickness which decreases from the center towards the ends thereof, said element being provided with a longitudinal slit therein suitable for retaining a longitudinal rib of a wiper blade, a window at one end of said slit for inserting the rib of the wiper blade into the slit, said slit having a plurality of widened areas similar to said window symmetrically formed in the zones of the element near the ends thereof to increase the flexibility, in the longitudinal direction, of said zone; and
a second element, curved as a leaf spring and elastically deformable in the longitudinal direction, and being superposed on said molded plastic element and assembled as a leaf spring, said second element having a length shorter than said molded plastic element and being formed by a pair of parallel branches mutually connected by brackets which are formed as small bridges.

4,063,329
APPARATUS FOR REMOVING A MIXTURE OF BLASTING MEDIA AND CLEANING RESIDUES FROM WORKPIECES TREATED WITH BLASTING MEDIA
Hans Manuel Aeschbacher, Schaffhausen, Switzerland, assignor to Georg Fischer Aktiengesellschaft, Schaffhausen, Switzerland
Filed Nov. 17, 1976, Ser. No. 742,455
Claims priority, application Switzerland, Nov. 21, 1975, 15106/75
Int. Cl.² B24C *9/00*
U.S. Cl. 15—306 A **10 Claims**

1. Apparatus for removing a mixture of blasting media and cleaning residue from workpieces treated with blasting media, said workpieces being moved through said apparatus in a given feed direction, said apparatus comprising damming means for damming said mixture on said workpiece, a mechanical cross conveyer engaging the dammed mixture adjacent said damming means, a blowoff device for blowing said mixture from said workpiece, and baffle means arranged to extend in a direction obliquely from said workpiece and from said feed direction thereof between said damming means and said blowoff device, said baffle means being arranged to conduct said mixture blown off said workpiece by said blowoff device over said damming means and onto said cross conveyer.

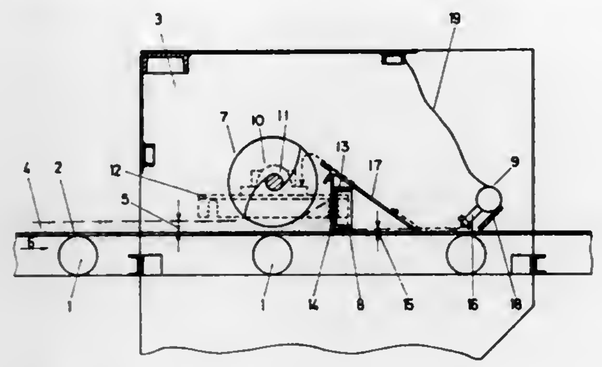

4,063,330
HINGE AND CATCH ASSEMBLY
Robert Eugene Triplette, Winston-Salem, N.C., assignor to Southern Tool Mfg. Co., Inc., Winston-Salem, N.C.
Filed Jan. 31, 1977, Ser. No. 764,262
Int. Cl.² E05D *11/08*
U.S. Cl. 16—142 **6 Claims**

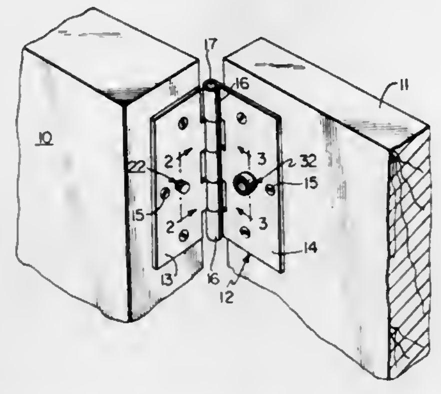

1. The combination of a hinge and catch comprising a hinge having first and second pivotally connected wings, said wings normally being in spaced substantially parallel relationship with each other, a male catch member axially and laterally movably mounted on said first hinge wing, said male member having an enlarged portion extending outwardly from said first hinge wing toward said second hinge wing, a female catch member axially and laterally movably mounted on said second hinge wing, a portion of said female catch member extending outwardly toward said first hinge wing, said female catch member having a recess of a size to snugly receive said enlarged portion of said male catch member when said first and second wings are generally parallel, and means for aligning said portion of said male catch member and the recess of said female catch member.

4,063,331
GUT PULLER
Leo O'Neal; Wayne H. Stark, and Richard B. Hoium, all of Albert Lea, Minn., assignors to Wilson Foods Corporation, Oklahoma City, Okla.
Filed May 24, 1976, Ser. No. 689,080
Int. Cl.² A22C *17/14*
U.S. Cl. 17—45 **28 Claims**

7. The method of pulling a strand of intestine from a casing set of convoluted small intestine with ruffle fat attached, as removed from an animal, comprising: manually separating the leading end of the intestine from the casing set; placing said leading end below a cutting knife and between a pair of spaced gripping members; manually holding and restraining the remainder of the casing set by a portion of the ruffle fat; effecting relative movement between said gripping members so that said gripping members compressively engage opposite sides of said intestine; moving said gripping members in a direction away from said casing set while continuing to support and restrain the remainder of the casing set, whereby a strand of intestine is progressively pulled; supporting said strand on a portion of its circumference; and holding a portion of said ruffle fat away from said supported portion of said strand and against said cutting knife as said strand is being pulled, to thereby sever the ruffle fat from the strand.

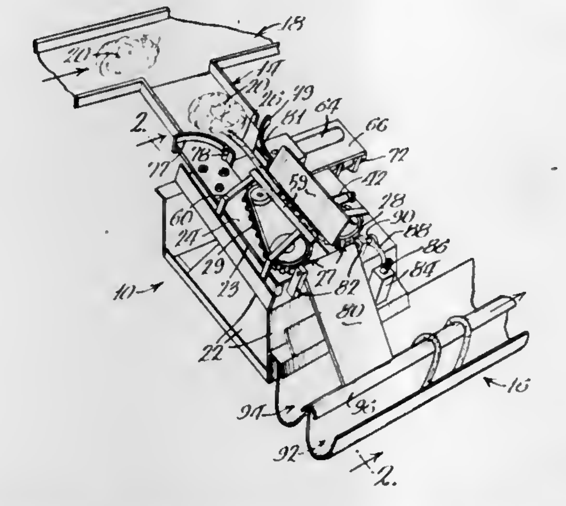

4,063,332
FISH-SKINNING TOOL
Timothy J. McCullough, West Lake, Vermilion, Ohio 44089
Filed Mar. 18, 1976, Ser. No. 668,130
Int. Cl.² A22C *25/17*
U.S. Cl. 17—62 **6 Claims**

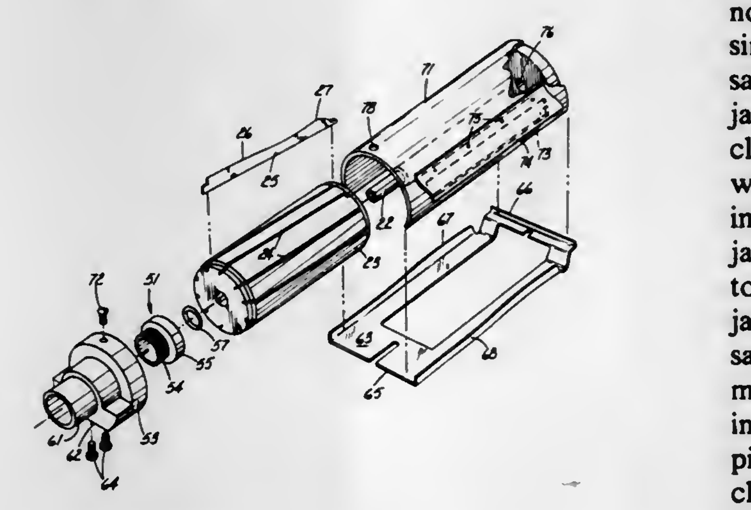

1. A hand-manipulated tool for skinning a fish body or the like comprising a blade-supporting cutting unit and an elongated handle assembly projecting from one side thereof, said cutting unit comprising a blade mandrel having a mandrel drive shaft rotatably supported for rotation about its longitudinal axis, said blade mandrel having removably secured therein a plurality of radially outwardly projecting continuous, linear knife blades each presenting a sharp cutting edge which terminates in a curved segment so as to function as a skinning blade, each said blade being offset from 2° to about 10° from said longitudinal axis, and having from about 10°-20° lead and 50°-70° rake, so that said sharp cutting edges when rotated, define a generally cylindrical cutting zone in which skin is cut away from flesh, a guide shoe removably disposed under said blade mandrel said guide shoe having an opening through which said sharp cutting edges adjustably protrude to cut skin away from flesh, said guide shoe having a generally planar surface for contact with said body, a guard enclosing said blade mandrel, said guard cooperating with said guide shoe to provide a confined zone from which cut skin may be discharged, and drive means for rotating said blade mandrel.

4,063,333
CLOTHESPIN
Russell A. Schweitzer, 17639 Dwyer, Detroit, Mich. 48212
Filed Nov. 18, 1976, Ser. No. 742,876
Int. Cl.² A44G *21/00*
U.S. Cl. 24—137 A **5 Claims**

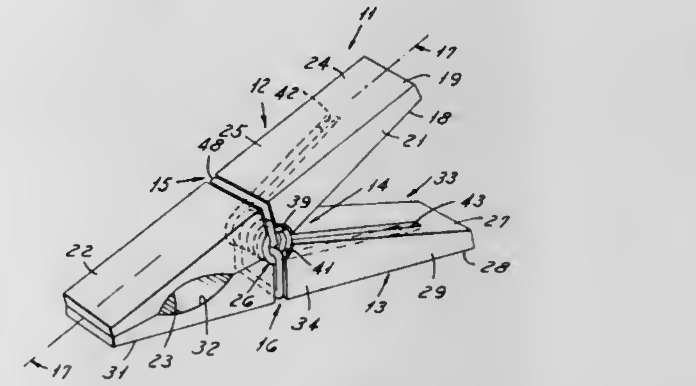

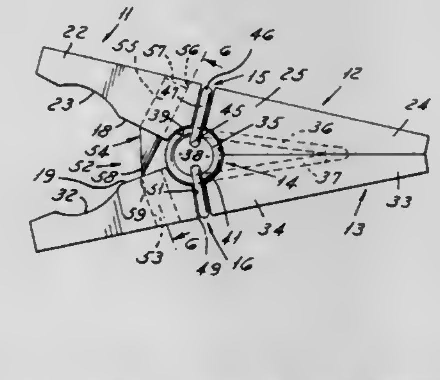

1. A clothespin comprising a pair of generally symmetrical, longitudinally, elongated, generally rectangular, block-like non-metallic members each having a longitudinal axis and similarly configured inner and outer surface portions; each of said pair of elongated members including a forward clamping jaw having its inner surface portion adapted for gripping a clothesline and articles to be hangably suspended therefrom when the clamping jaw of one of said pair of members closes into clamping engagement with the corresponding clamping jaw of the other of said pair of members, a tapered tail adapted to be manually engaged for levering said forward clamping jaws open, and an intermediate portion between said jaw and said tail for defining a fulcrum about which each of said pair of members may be pivoted for opening and closing said clamping jaws with respect to one another; metal spring means for pivotally urging said clamping jaws toward one another in a clamping position, said spring means including a coiled hollow body portion intermediate first and second relatively straight elongated end portions; the intermediate portion of each of said pair of members including a transverse lateral groove across the inner surface portion thereof, said groove being generally perpendicular to said longitudinal axis and having a generally semi-circular cross-sectional configuration such that the coiled hollow body portion of said spring means may be houseably received between the correspondingly opposed lateral grooves in the inner surface portions of said pair of elongated members and at least partially concealed therein, the intermediate portion and tail of one of said pair of members having a first relatively straight longitudinal recess in the inner surface portion thereof for receivably retaining and recessably concealing said first relatively straight elongated end portion of said spring means and the intermediate portion and tail of the other of said pair of members having a secong relatively straight longitudinal recess in the inner surface portion thereof for receivably retaining and recessably concealing said second relatively straight elongated end portion of said spring means so that the end portions of said spring means are recessed beneath said inner surface portions and said coiled body portion is at least partially recessed to prevent or at least minimize metal contact with said clothesline and said suspended articles,

a first metal clip means for retainably securing one of said pair of members to the coiled hollow body portion of said spring means and a second metal clip means for retainably securing the other of said pair of members to the coiled hollow body portion of said spring means so as to prevent the inadvertent separation of said members and said spring means even under abnormal conditions, each of said members including a three-sided continuous slot formed in the external surfaces of the intermediate portion thereof and extending from one end of said lateral groove in the inner surface portion along the side of said intermediate portion, laterally across the outer surface portion of said intermediate portion directly opposite said lateral groove and along the opposite side of said intermediate surface to the opposite end of said lateral groove, the outer surface slot portion being generally parallel to said lateral groove and perpendicular to said longitudinal axis and said side slots being generally perpendicular to said lateral groove; each of said clip means being an integral piece of resilient metallic material generally configured as a partially opened rectangle when in operative position, said clip means having a relatively straight intermediate clip body, a pair of relatively straight clip sides which are generally perpendicular to said clip body and a pair of clip ends disposed toward one another and generally parallel to said clip body and perpendicular to said clip sides, said body portion being adapted to be receivably retained and recessably concealed within said outer surface slot portion, said clip sides being adapted to be receivably retained and recessably concealed within said slot sides, and said clip ends adapted to be insertably received and retained within the opposite hollow ends of said coiled spring body thereby preventing separation while simultaneously recessing said metal clip means beneath the exterior side and outer surface portions of said members to prevent or at least minimize metal contact with said clothesline and the articles suspended therefrom to prevent rust spots and the like.

4,063,334
SPRING-TYPE FASTENER
Terrance J. Rohman, Joliet, Ill., assignor to Caterpillar Tractor Co., Peoria, Ill.
Filed Feb. 5, 1976, Ser. No. 655,335
Int. Cl.² A44B *17/00, 1/18*
U.S. Cl. 24—213 B **2 Claims**

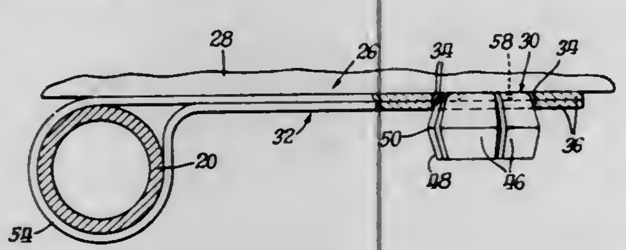

1. In a fastening arrangement for positioning a loose element relative to a support comprising a fastener having a substantially circular base portion with a predetermined diameter, a plurality of closely adjacent outwardly extending spring members resiliently connected to said base portion and terminating in outer end portions, said spring members being radially bow-shaped and providing a radially enlarged midportion to the fastener between the base portion and the outer end portions, the diameter of the fastener at the midportion of the spring members being greater than the diameter of said base portion, means for securing the base portion of said fastener to said support, a retaining strap having an intermediate portion encircling the loose element, each end portion of said strap having an aperture therethrough of a size conforming to the diameter of the base portion of said fastener, the enlarged diameter midportion of the spring members of the fastener passing with resistance through said apertures in the strap as the end portions of the strap are secured to said fastener for retaining said element in place relative to said support.

4,063,335
CLIP RECEPTACLE
Peter Schenk, West Islip, N.Y., assignor to Dzus Fastener Co., Inc., West Islip, N.Y.
Filed Feb. 11, 1976, Ser. No. 657,103
Int. Cl.² A44B *17/00*
U.S. Cl. 24—221 R **6 Claims**

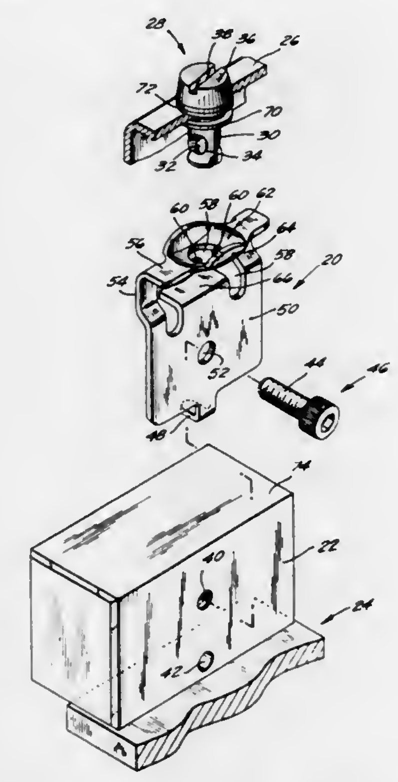

1. A receptacle for attachment to one of two members to be fastened together and for interengagement with a stud coupled with the other of the two members comprising:

A thin elongated body having a configuration facilitating its mounting and use is close relationship to an adjacent wall surface, the body having a receiving flange extending in a first direction traverse to said body and including an aperture for passage of a portion of a stud therethrough for coupling therewith, spring means on the body to accommodate the reciprocation of the portion of the stud coupled therewith during fastening and unfastening operations, one of the body and the stud to be fastened therewith having a spiral cam slot therein and the other of the body and the stud having cam follower surfaces thereon so that when the body is coupled with the stud the slot will be aligned with the follower surface so that relative rotation between the stud and receptacle will permit axial movement of the cam follower surface in the cam slot and accompanying axial movement of the stud with respect to the receptacle between the locked and unlocked positions, and attachment means on the body for attaching the body to one of the members to be fastened so that when a stud is coupled with the other member to be fastened and the stud and receptacle are interengaged the two members can be fastened together, alignment means on the body to facilitate alignment of the receptacle with respect to the one member to which it is attached and for receipt of the stud and other members coupled therewith, and the spring means being in the form of a U-shaped portion with said flange being one leg of the u-shaped portion and the other leg being integrally connected to said body, said U-shaped portion being weakened by a central slot through the bight of said U-shaped portion so as to provide resilience to that portion of the body and permit axial movement of portions of the body in response to an axial force supplied thereto, a lateral stop extending from the body into and through said slot in a direction opposite to said first direction for engagement and support of the other member, the stop having a free end and being spaced from the adjacent surface of the one member, said lateral stop being substantially parallel to said flange.

4,063,336
CLAMP FOR TUBING
W. Richard Jones, North Barrington, and Harry J. Kraig, Barrington Hills, both of Ill., assignors to Mercury Metal Products, Schaumburg, Ill.
Continuation of Ser. No. 701,908, July 1, 1976, abandoned. This application Jan. 5, 1977, Ser. No. 757,068
Int. Cl.² F16L *33/10*
U.S. Cl. 24—277 **8 Claims**

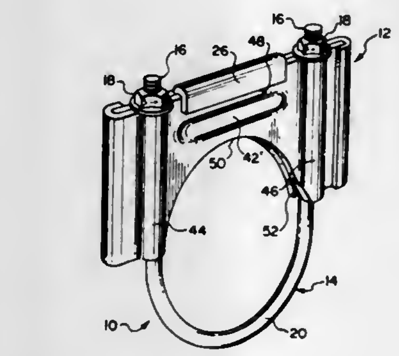

1. A U-bolt clamp saddle comprising:
an assembly of two sheet metal members face to face, each member being formed of a generally rectangular stamping having a vertically arranged semicylindrical groove adjacent respective ends, an integral flange extending beyond each end and one flange extending further than the other to form a narrow flange at one end and a wide flange at the other end, a semicircular pressure-applying edge formed at the bottom of each sheet metal member and extending from the bottom end of one groove to the bottom end of the other groove, one of the sheet metal members having an integral tab formed on its top edge spaced above the center of the semicircular edge, the assembly being effected with the wide flanges reverse bent over and around the juxtaposed narrow flanges and the tab reverse bent over and around the upper edge of the second sheet metal member.

4,063,337
MULTI-ELEMENT CASKET
Ambrose S. Havey, III, 107 N. Broadway, Yonkers, N.Y. 10701
Filed Aug. 27, 1976, Ser. No. 718,114
Int. Cl.² A61G *17/00*
U.S. Cl. 27—2 **14 Claims**

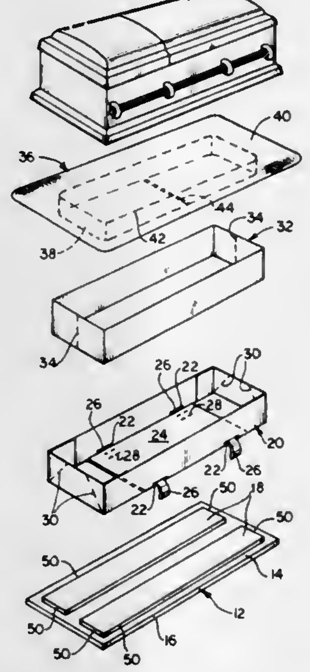

1. A multi-element casket, comprising:
a. bedding;
b. a foldable container bottom configured and dimensioned to contain said bedding, said container bottom having sidewalls and a bottom element;
c. a platform disposed below said container bottom, said platform being separate from said container bottom; and
d. and outer casket shell having an openable top element and sidewalls, said outer casket shell being configured and dimensioned to extend around and be positioned over said container bottom and rest on said platform.

4,063,338
STRAND TREATMENT METHOD AND APPARATUS
William Kirk Wyatt, West Chester, Pa., assignor to Textured Yarn Co., Inc., Kennett Square, Pa.
Filed Nov. 19, 1975, Ser. No. 633,594
Int. Cl.² D02G *1/12, 1/16*
U.S. Cl. 28—221 **22 Claims**

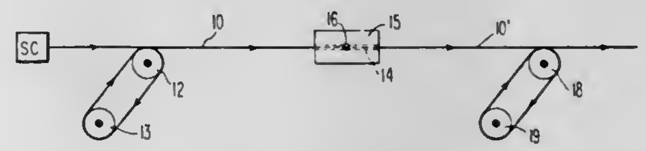

1. Method of interlacing the filaments of a multifilament textile strand, comprising running the strand lengthwise past an interlacing locus, confining the strand circumferentially at the interlacing location and subjecting the strand at the interlacing locus to a fluid stream substantially perpendicular to the running direction of the strand said strand being confined at least several times as closely in one lateral dimension as in the lateral dimension perpendicular thereto.

4,063,339
METHODS OF ASSEMBLING AND MOUNTING THREE-ELECTRODE GAS TUBE ARRESTER
Frank G. Splitt, Arlington Heights, and Eric A. Scheithauer, Chicago, both of Ill., assignors to Cook Electric Company, Morton Grove, Ill.
Division of Ser. No. 636,798, Dec. 1, 1975, Pat. No. 4,009,421, which is a continuation of Ser. No. 516,286, Oct. 21, 1974, abandoned. This application Dec. 22, 1976, Ser. No. 753,427
Int. Cl.² H01J *9/18*
U.S. Cl. 29—25.15 **5 Claims**

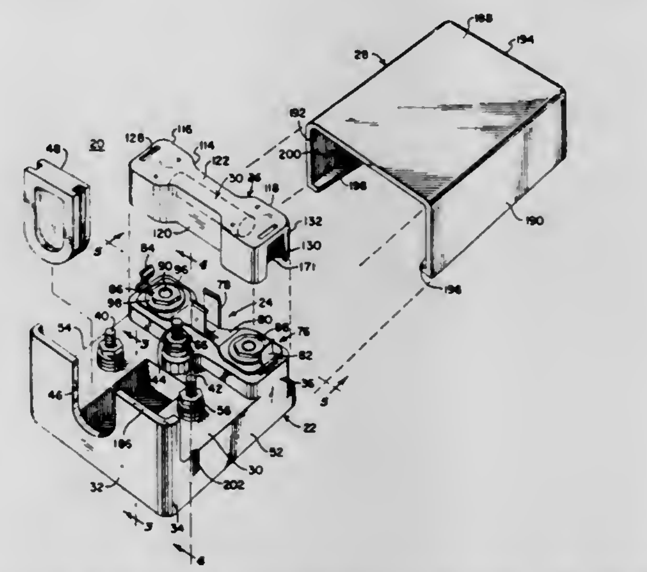

1. A method of mounting a three-electrode arrester having a pair of line electrodes and a ground electrode on a protector having line terminals, a ground terminal and arrester mounting means coupled to said line terminals and said ground terminal by means of a clip assembly having contact assembly means and an arrester holding means, said method comprising

inserting said contact assembly means into said arrester mounting means,

securing said contact assembly means in said arrester mounting means such that said contact assembly means is coupled to said line terminals and can be selectively coupled to said ground terminal, and

inserting an arrester module containing said three-electrode arrester and contact means fusibly linked to said line electrodes into said arrester holding means such that said contact assembly means couples said line electrodes to said line terminals and said ground electrode to said ground terminal.

4,063,340

METHOD OF MANUFACTURING A UNITIZED IN-LINE ELECTRON GUN

Horst H. Blumenberg, Elmwood Park, and Kenneth A. Guzowski, Chicago, both of Ill., assignors to Zenith Radio Corporation, Glenview, Ill.

Division of Ser. No. 649,630, Jan. 16, 1976. This application Oct. 29, 1976, Ser. No. 736,791

Int. Cl.² H01J *9/18*

U.S. Cl. 29—25.16 **2 Claims**

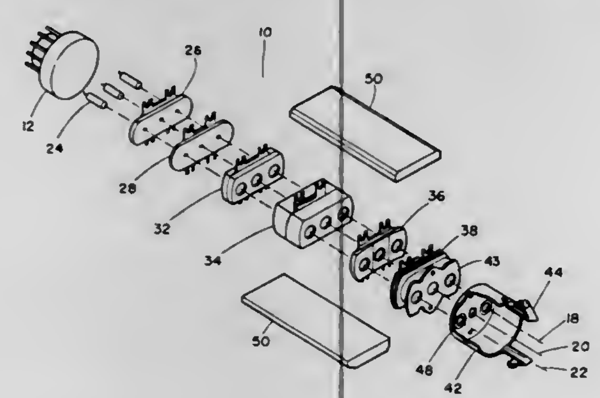

1. In the manufacture of a unitized, in-line electron gun for a color cathode ray tube having an axial succession of unitized electrodes including a final focus electrode, said electrodes each having therethrough three beam-passing apertures aligned with the beam-passing apertures in other electrodes, a method for aligning and attaching a convergence cup to the final focus electrode, comprising:

providing a carrier plate having three beam-passing apertures of the same diameter and position as the beam-passing apertures in said final focus electrode;

aligning said carrier plate with said final focus electrode by locating tool means inserted through said outside beam-passing apertures of both said carrier plate and said final focus electrode;

bonding said carrier plate to said final focus electrode by welding means;

aligning the bonded combination of said carrier plate and said final focus electrode with said convergence cup by tooling pin means inserted through aligned like-size apertures in said carrier plate and said convergence cup and located away from said beam passing apertures; and

bonding said combination and said convergence cup by welding means.

4,063,341

PROCESS FOR MAKING MULTILAYER CAPACITORS

Robert Joseph Bouchard, Wilmington, Del.; Lothar Heinrich Brixner, West Chester, Pa., and Michael John Popowich, Lewiston, N.Y., assignors to E. I. Du Pont de Nemours and Company, Wilmington, Del.

Division of Ser. No. 594,281, July 9, 1975, abandoned. This application May 21, 1976, Ser. No. 688,932

Int. Cl.² H01G *4/10*

U.S. Cl. 29—25.42 **4 Claims**

1. A method of making a monolithic capacitor comprising a plurality of superimposed alternating layers of a dielectric composition and metal electrodes bonded together into a unitary body, the method comprising the steps of

a. calcining in air, at a peak temperature in the range 750°–900° C., for at least 5 minutes, a mixture of oxides or precursors thereof in such relative proportions to produce a dielectric composition, having the formula

$$(Sr_xPb_{1-x}TiO_3)_a(PbMg_{0.5}W_{0.5}O_3)_b$$

wherein

x is 0–0.10,

a is 0.35–0.5,

b is 0.5–0.65, and

a plus b equals 1,

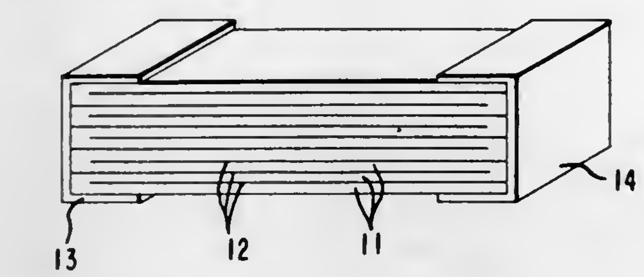

then comminuting the resultant calcined product until substantially all the particles are 20 microns or less in largest dimension,

b. preparing an unsintered flexible ceramic dielectric tape of the calcined product of step (a) in an inert liquid vehicle therefor,

c. electroding two or more such tapes in the desired pattern with a dispersion of metal powder in an inert vehicle therefor,

d. laminating a multiple number of such tapes as desired, the top layer being an unelectroded tape, and

e. sintering the resultant laminate in air for at least 0.25 hour at a temperature in the range 900°–1050° C. to form a unitary monolithic multilayer capacitor having a K of at least 1000 and a dissipation factor of no more than 5%.

4,063,342

BRAKE SERVICE TOOL

Wallace F. Mitchell, Mettawa, and Clifford A. Evans, Waukegan, both of Ill., assignors to Ammco Tools, Inc., North Chicago, Ill.

Filed Jan. 2, 1976, Ser. No. 646,066

Int. Cl.² B23P *19/04*

U.S. Cl. 29—227 **7 Claims**

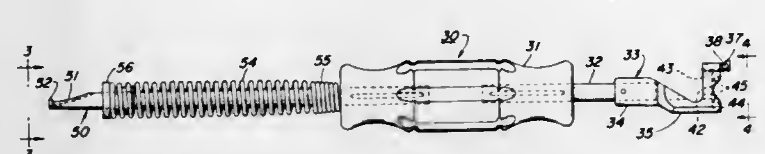

1. A brake service tool, comprising

a handle,

a first rigid shank extending from said handle and having an offset lip at the distal end thereof,

said lip having a concave edge for engaging the anchor pin of a shoe brake assembly,

a second rigid shank extending from said handle,

an integral member positioned at the distal end of said second shank,

said integral member having an inwardly convergent frustoconical recess at the outer end for tightly receiving a hold-down spring retainer disc,

said integral member having a transverse wall disposed inwardly of said recess and having an off-center circular hole therein for receiving the head of a brake shoe anchor pin, and

said integral member having an external lug provided with a pair of oppositely directed spiral grooves, the axis of generation of said grooves being coaxial with the center of said circular hole.

4,063,343

METHOD AND TOOL FOR STRIPPING ENDS OF CABLES CONTAINING MULTIPLE CONDUCTORS

Jean-Claude Reymond; Luigi d'Auria; Benoît Le Guen, and Gilbert Rousseil, all of Paris, France, assignors to Thomson-CSF, Paris, France

Filed Feb. 9, 1977, Ser. No. 767,223

Claims priority, application France, Feb. 13, 1976, 76.04079

Int. Cl.² B23P *19/02;* **H02G** *1/12*

U.S. Cl. 29—427 **5 Claims**

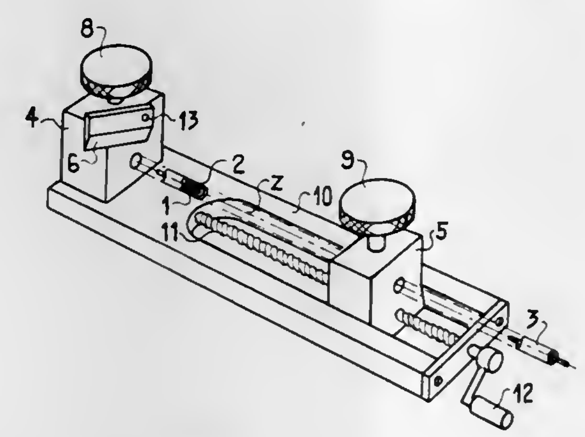

1. A method of stripping ends of cables containing multiple conductors which have an external protective sheath surrounding the conductors, in particular bundles of optical fibres, the said method comprising the following successive operations:

clamping a cable by exerting compression on the sheath in two areas, namely a first area situated in the end-portion to be stripped and a second area situated outside this portion at a predetermined distance from the first area,

stretching a part of the sheath lying between the said areas by longitudinal traction by a predetermined amount at least equal to the axial length to be stripped, the said distance being calculated on the basis of the amount of stretch and the limiting elastic characteristics of the sheath material,

cutting off a piece of sheath of the length to be stripped at the end of the cable,

the unclamping cable after the sheath has pulled back.

4,063,344

METHODS FOR FORMING A HIGH TEMPERATURE AND SHOCK RESISTANT INSULATED PIPE

Henry B. Jones, and Dorrance P. Bunn, Jr., both of Houston, Tex., assignors to Texaco Inc., New York, N.Y.

Filed Dec. 27, 1976, Ser. No. 754,789

Int. Cl.² B21D *39/00;* **B23P** *19/04*

U.S. Cl. 29—455 R **12 Claims**

1. A method for making a pipe high temperature and shock resistant for resisting vibrations due to passage therein of high velocity gas or fluidized solids at elevated temperatures comprising the steps of,

a. forming a batt of fiber felt to the inner surface of a pipe,

b. securing a high temperature resistant metal shield over the inner surface of the fiber felt batt in the pipe, and

c. forming an erosion resistant castable refractory over the inner surface of the high temperature resistant metal shield

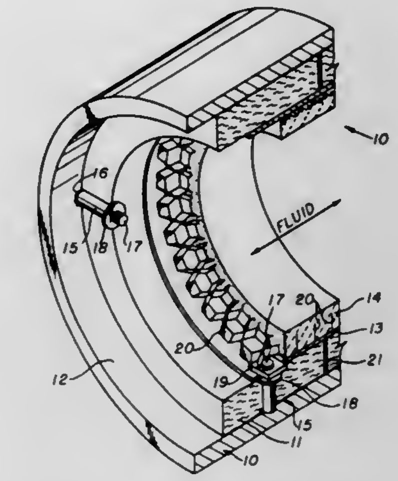

for forming a high temperature resistant and high mechanical strength insulation in the pipe.

4,063,345

METHOD AND APPARATUS FOR RFI BAND REPLACEMENT

Edward Sliz; John O. Brooks, both of Huntsville, and Howard M. Gibson, Union Grove, all of Ala., assignors to The United States of America as represented by the Secretary of the Army, Washington, D.C.

Filed Dec. 20, 1976, Ser. No. 752,352

Int. Cl.² B21D *39/00;* **B23P** *11/02*

U.S. Cl. 29—522 **5 Claims**

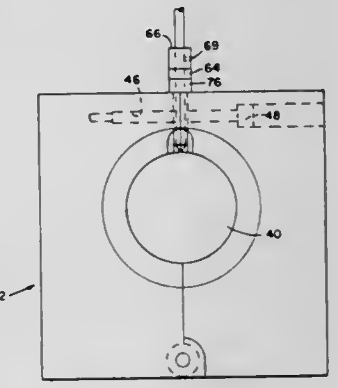

1. Apparatus for assembling an RFI band on a cable connector comprising:

a. a body including a pair of members pivotly secured together and provided with a central opening to receive said band in circumferential relation with said connector;

b. said body having an upper opening transversely to said central opening and a groove in communication with said central opening and said upper opening, whereby responsive to receiving said connector in said central opening operating means is inserted through said upper opening and said groove for secured relation of said band on said connector, and

c. operating means inserted through said upper opening for upsetting a rivet inserted into alignment with said upper opening through said groove.

5. A method of assembling an RFI band having openings on the ends thereof on a cable connector having an opening therein, in a jig having a pair of members pivotally secured together and provided with a central opening, an upper opening and a groove communicating with said central and upper opening comprising the steps of:

a. loosely wrapping said band about said connector;

b. inserting said connector and said band in said central opening;

c. aligning said openings on the ends of said band with the

opening in said cable connector and the central opening in the jig;

d. inserting a rivet in said opening in said cable connector through said groove in said body,

e. inserting a rivet setter in said upper opening in engagement with said rivet; and,

f. striking said rivet to upset said rivet for securing said band to said cable connector.

4,063,346

SILVER COLOR PROOF COIN OR MEDAL AND METHOD OF MAKING THE SAME

James W. Simpson, Springfield; Andrew Cosgarea, Jr., Newtown Square, both of Pa., and Richard D. Bankert, Wilmington, Del., assignors to Franklin Mint Corporation, Franklin Center, Pa.

Filed Apr. 29, 1976, Ser. No. 681,863

Int. Cl.^{2} B22D *11/126*

U.S. Cl. 29—527.7 **14 Claims**

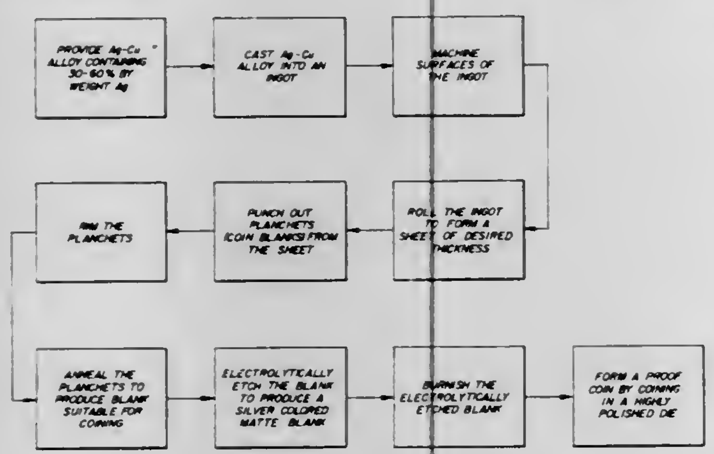

1. A method of making a silver color proof coin or medal from a copper-silver alloy comprising the steps of:

a. producing a copper-silver alloy wherein the silver component is from 30 to 60 weight percent of said alloy;

b. forming a coin blank from said alloy;

c. electrolytically etching said coin blank for a sufficient time to remove a sufficient amount of copper from the surfaces of said coin blank to produce a coin blank having a silver surface color;

d. burnishing said electrolytically etched coin blank; and

e. coining said coin blank in a highly polished die.

4,063,347

MACHINE FOR INSERTING MULTI-LEAD COMPONENTS SEQUENTIALLY

Daniel Wayne Woodman, Jr., Beverly, Mass., assignor to USM Corporation, Boston, Mass.

Filed Oct. 1, 1976, Ser. No. 728,835

Int. Cl.^{2} B21F *1/02*

U.S. Cl. 29—564.1 **11 Claims**

1. In combination with a component inserting machine having means for inserting components provided with in-line leads, a plurality of raceways for supplying the components to be inserted, a cross-slide means for locating a circuit board relative to the inserting means, and a computer controlled means for automatically operating the inserting means and the cross-slide means according to predetermined program, a movable picker assembly responsive to the computer controlled means for selecting successive predetermined components from the respective raceways according to said program and delivering them individually to the inserting means, said picker assembly comprising component escapement means including a detent arranged to cooperate with the raceways, respectively, mechanism for operating the detent of said escapement means comprising a plurality of actuating arms, and a power means responsive to the computer controlled means when the picker is in predetermined position for causing one of

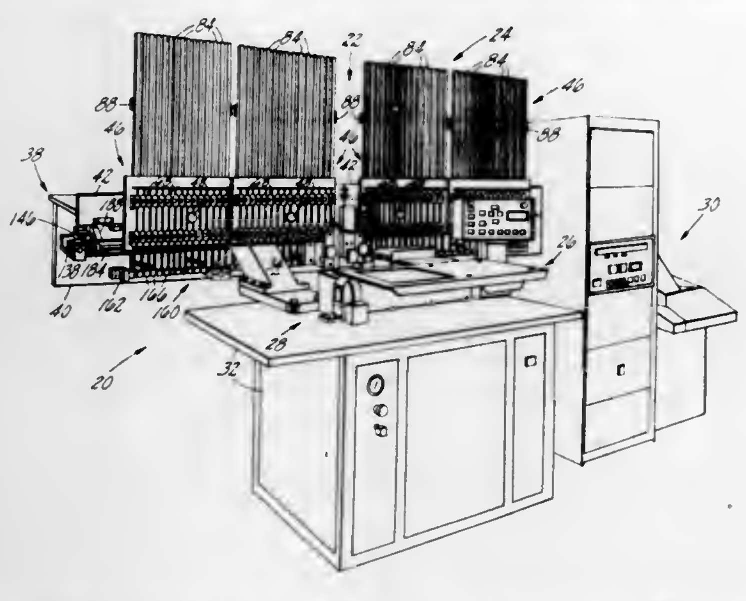

said arms to release each selected component in succession to the picker assembly.

4,063,348

UNIQUE PACKAGING METHOD FOR USE ON LARGE SEMICONDUCTOR DEVICES

Raymond Walter Borden, Farmingdale, and James Edward DeBard, Eatontown, both of N.J., assignors to The Bendix Corporation, Teterboro, N.J.

Division of Ser. No. 553,778, Feb. 27, 1975, abandoned. This application Aug. 9, 1976, Ser. No. 713,072

Int. Cl.^{2} B01J *17/00*

U.S. Cl. 29—588 **3 Claims**

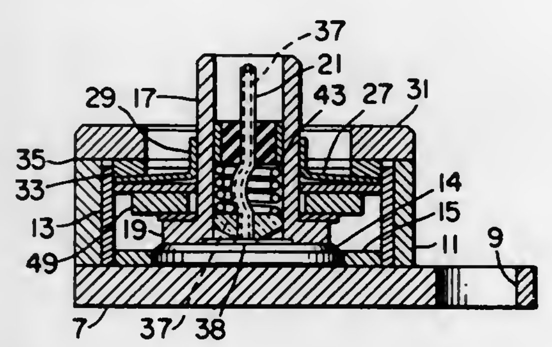

1. A method of assembling a semiconductor device comprising securing a diaphragm with an aperture therein by means of insulation to a ring-shaped electrode, assembling a spring member on a cylindrical electrode having a flange at one end and inserting the cylindrical electrode through the aperture in the diaphragm and attaching the cylindrical electrode to the diaphragm with the spring-like member in relaxed position between the flange and the diaphragm, assembling a tube-like member to a base and positioning a semiconductor pellet within the tube-like member on the base, positioning the flange of the cylindrical electrode on the semiconductor pellet and compressing the spring member until the ring-shaped electrode engages the tube-like member on the base, and securing the ring-shaped electrode to the tube-like member with the spring member under compression.

4,063,349

METHOD OF PROTECTING MICROPACKAGES FROM THEIR ENVIRONMENT

Herbert Edwin Passler, and James David Fredenberg, both of Phoenix, Ariz., assignors to Honeywell Information Systems Inc., Phoenix, Ariz.

Filed Dec. 2, 1976, Ser. No. 746,755

Int. Cl.^{2} H05K *3/28*

U.S. Cl. 29—627 **10 Claims**

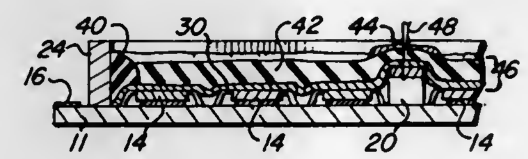

1. A process for protecting from the ambient environment components mounted on a component area of a surface of a substrate, said component area having a perimeter; said process comprising the steps of:

a. cutting a segment of a substantially nonpermeable flexible membrane to a shape that is substantially congruent with the perimeter of the component area of the substrate, said segment having an inner and outer surface,

b. attaching the segment to the perimeter of the component area with a sealant adhesive,

c. coating the outer surface of the segment with a layer of substantially impermeable material that adheres to the membrane and to the sealant adhesive,

d. forming a small opening through the layer and the segment,

e. subjecting the substrate to substantially reduced pressure, and

f. sealing the opening formed through the layer and the segment with an adhesive sealant while the substrate is subjected to such a reduced pressure.

4,063,350

METHOD OF MAKING ELECTRICAL CONNECTIONS

Colin Ashcroft Evans, Liverpool, England, assignor to Plessey Handel und Investments A.G., Zug, Switzerland

Filed May 20, 1976, Ser. No. 688,183

Claims priority, application United Kingdom, May 20, 1975, 21366/75

Int. Cl.^{2} H01R *43/00*

U.S. Cl. 29—628 **5 Claims**

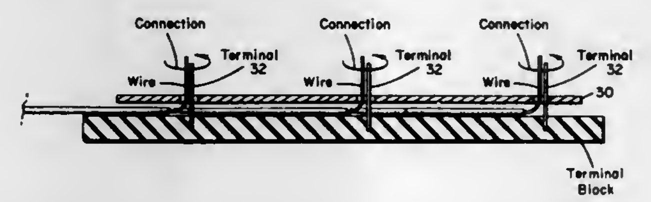

1. A method of operating on the end of a multi-conductor cable for connecting the cable to a terminal block having its terminals arranged in a co-ordinate field, the method including the steps of providing a flexible plastic plate comprising a plurality of integral readily-detached flexible strips, one strip for each row of terminals, said strip having a perforation corresponding to each terminal of a row, mounting the plate in a location close to the position to be occupied by the terminal block, threading insulated wires of a cable through particular holes of the plate, separating said strip from the plate, placing the strip upon a requisite row of terminals of the duly located terminal block so that one wire-end and one terminal-end emerge in the same direction from at least one of said perforations, connecting each said terminal and wire emerging from the same perforation by a power driven device, and then removing the flexible strip of plastic material after the terminal and wire have been connected provided that the terminal emerging from a perforation has been wired to the wire emerging from the same perforation.

4,063,351

ELECTRICAL CONNECTOR ASSEMBLY APPARATUS AND METHOD OF CONNECTOR FABRICATION

Leslie M. Borsuk, Los Alamitos; Randall H. Anderson; Emerson A. Grimsby, both of Brea, and Robert F. Malsberger, Newport Beach, all of Calif., assignors to International Telephone and Telegraph Corporation, New York, N.Y.

Filed Dec. 20, 1976, Ser. No. 752,445

Int. Cl.^{2} H02G *15/08;* **B23P** *21/00*

U.S. Cl. 29—629 **4 Claims**

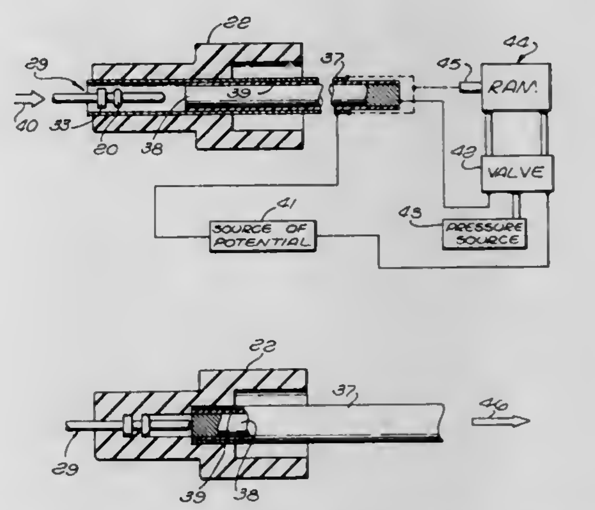

1. The method of fabricating an electrical connector, said method comprising the steps of: supporting a resilient insulator, said insulator having a hole therethrough; telescoping hollow cylinder means into said insulator hole to stretch said hole to a position larger than its unstressed cross section; telescoping cylindrical insulator covered rod means partway into said cylinder means; and creating an electrical short between one end of said rod means and said cylinder means with an electrical contact to cause said insulator to be relieved in a manner to allow the same to contract upon and to hold said contact fixedly in inward radial compression in said insulator hole.

4,063,352

METHOD OF MAKING ELECTRODE PACKAGE

Albert J. Bevilacqua, Downers Grove, Ill., assignor to M I Systems, Inc., Westmont, Ill.

Division of Ser. No. 706,012, July 16, 1976, Pat. No. 4,034,854. This application Dec. 20, 1976, Ser. No. 752,678

Int. Cl.^{2} H01R *9/02*

U.S. Cl. 29—630 R **9 Claims**

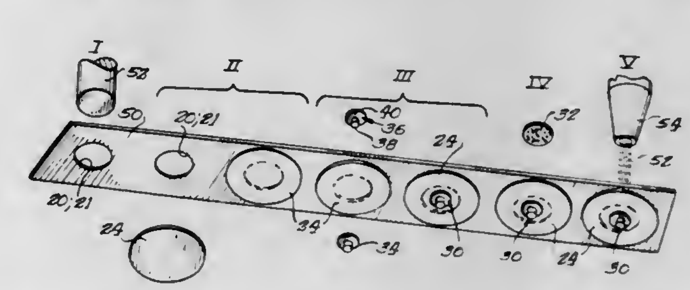

1. A method of fabricating an electrode package having a carrier member with at least one opening formed therein, and at least two electrode devices secured to said carrier member, one said device being secured to one surface thereof and the other to the opposite surface thereof, both in overlying relation to said opening, said method comprising the steps of:

providing a length of apertured carrier material in strip form having at least two apertures formed therein;

providing at least two electrode devices secured to a first surface of said strip of carrier material in overlying relation to said apertures;

folding said length of strip material along a fold line proximate the midpoint thereof, such that two separate portions are defined of generally equal length;
bringing said portions into engagement along a second surface of said strip of carrier material with said apertures in generally coaxial alignment;
securing said portions of the strip material together along said second surface thereof such that said said portions in effect define a multiple-layer carrier member, with said pair of aligned apertures in effect defining a single opening in the said carrier member.

4,063,353
HAIRCUTTERS FEATURING BLADE HOLDING MEANS
Abram N. Spanel, 344 Stockton St., Princeton, N.J. 08540
Filed Nov. 11, 1976, Ser. No. 741,004
Int. Cl.^{2} B26B *21/12*
U.S. Cl. 30—30 **18 Claims**

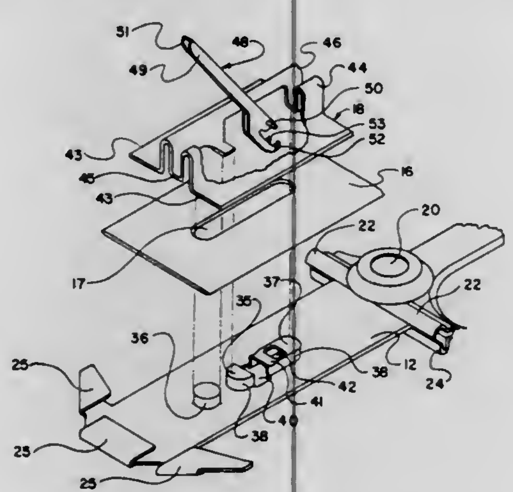

1. A hair cutter or the like utilizing a supported, apertured razor-like blade, said hair cutter having a blade holding means comprising:
a blade support including a clamp bar; and
a detachable clamp member positionable on said supported blade, said clamp member including a clamp lever having a portion engageable with said clamping bar through said aperture whereby upon engagement said supported blade will be secured between said blade support and said clamp member.

4,063,354
SHAVING UNIT
Brian Oldroyd; Harry Pentney, and John Charles Terry, all of Reading, England, assignors to The Gillette Company, Boston, Mass.
Filed May 28, 1976, Ser. No. 690,874
Claims priority, application United Kingdom, May 29, 1975, 23500/75
Int. Cl.^{2} B26B *21/22*
U.S. Cl. 30—47 **3 Claims**

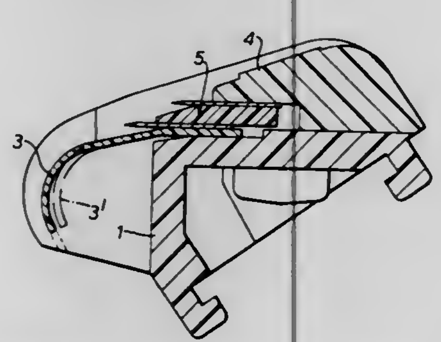

1. A shaving unit comprising cap means, first platform means, said cap means being permanently joined to said first platform means, said first platform means having a connector portion for connection of said unit to a razor handle, blade means, and guard means, said guard means comprising a guard portion for engaging the skin ahead of a cutting edge of said blade means and a second platform portion, said guard portion being an extension of said second platform portion, said blade means and said guard portion being permanently joined and disposed between said cap means and said first platform means, said blade means and said second platform portion being slidably movable in unison relative to and between said cap means and said first platform means against a resilient restoring force in response to forces transmitted to said unit during shaving.

4,063,355
CUTTER FOR HELICALLY CORRUGATED TUBE FOR FLEXIBLE GAS INSULATED CABLE
Philip C. Netzel, Milmont Park, Pa., assignor to I-T-E Imperial Corporation, Spring House, Pa.
Filed Aug. 30, 1976, Ser. No. 718,880
Int. Cl.^{2} B23D *21/06;* **B26B** *27/00;* **B26D** *3/16*
U.S. Cl. 30—96 **9 Claims**

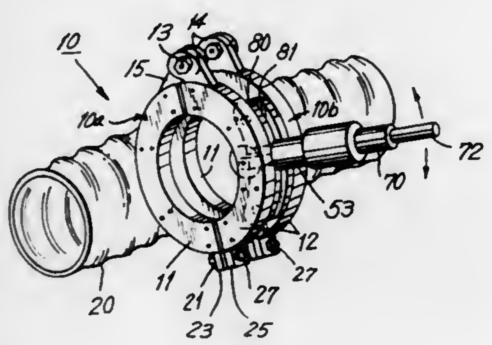

1. A cutter for circumferentially cutting a flexible helically corrugated pipe;
said corrugated pipe having a helical ridge and a helical trough defining the corrugation;
said cutter comprising a pair of rings;
means for securing said pair of rings around said pipe;
each ring having a transverse dimension at least equal to the distance between two adjacent runs of helical ridge;
each ring having a track;
a blade carrier riding in the track of each ring;
a cutting wheel blade positioned in said blade carrier;
said rings and said tracks being interconnected by said blade carrier;
means on said blade carrier biasing said blade toward said pipe; and
means for moving said carrier circumferentially in said tracks to effect a cutting operation during movement of said carrier.

4,063,356
HAND KNIFE
Paul Steabben Hepworth, Leicester, England, assignor to Plas Plugs Limited, Burton-on-Trent, England
Filed Aug. 23, 1976, Ser. No. 717,015
Claims priority, application United Kingdom, Sept. 10, 1975, 37201/75
Int. Cl.^{2} B26B *1/00*
U.S. Cl. 30—162 **4 Claims**

1. A hand knife suitable to house a strip steel blade with snap-off ends comprising an elongated body defining therein a longitudinal passageway for the blade, and having a longitudinal slot in communication with at least a portion of the length of said passageway, a blade shifting element, said longitudinal passageway receiving and permitting movement of said blade shifting element, a set of fixed detent formations in said body co-operating with complementary formations on said knife-shifting element to engage and locate the shifting element in a

selected adjusted position, and said body being provided with a removable end portion, said end portion having a slot into

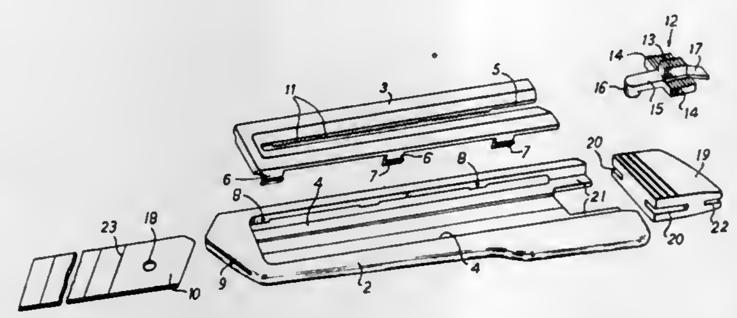

which a worn portion of the blade may be received and snapped off when the end portion is removed for use.

4,063,357
SAFETY RAZORS
John Frederick Francis, Woking, England, assignor to The Gillette Company, Boston, Mass.
Continuation of Ser. No. 618,634, Oct. 1, 1975, abandoned. This application Jan. 28, 1977, Ser. No. 763,494
Claims priority, application United Kingdom, Oct. 8, 1974, 43528/74
Int. Cl.^{2} B26B *21/54, 21/22*
U.S. Cl. 30—346.58 **8 Claims**

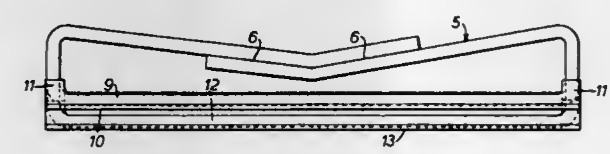

1. A shaving unit comprising narrow elongated blade means having cutting edge means thereon, and substantially rigid frame means including a thin elongated wire-like front portion, a thin elongated back portion, said front and back portions being parallel to each other and being joined by thin elongated end portions, said front, back and end portions defining a slot therebetween, said front portion having a support portion having a substantially flat surface thereon, said blade means being permanently secured over its full length of said surface and being over its full length adjacent thereto, said cutting edge facing away from said slot, and said cutting edge means projecting clear of said support portion.

4,063,358
GUARD FOR A CHAIN SAW USED FOR CARVING
Gerald J. Hodge, 4955 - 24th Ave., Port Huron, Mich. 48060
Filed Mar. 9, 1977, Ser. No. 775,744
Int. Cl.^{2} B27B *17/02*
U.S. Cl. 30—371 **10 Claims**

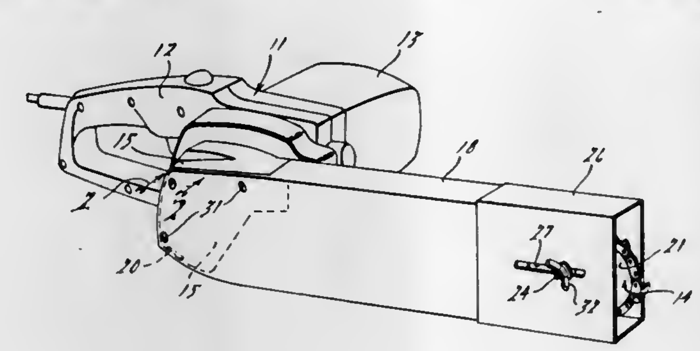

1. In a chain saw guard, a support, a motor on one side of said support, a guide bar and chain on the opposite side of said support, a guard embodying a first rectangular element secured to said support for encompassing said guide bar and chain, a second rectangular element supported on the forward end of said first rectangular element, and means for fixedly adjusting said second rectangular element in a fixed position on said first rectangular element to expose a selected amount of the tip portion of the guide bar and chain for carving.

4,063,359
VEHICLE MOUNTED BOOM APPARATUS
Arthur J. Luscombe, c/o Rubber Dynamics Corporation, Armstrong, Iowa 50514
Filed Jan. 12, 1977, Ser. No. 758,772
Int. Cl.^{2} F16M *11/04*
U.S. Cl. 30—379.5 **1 Claim**

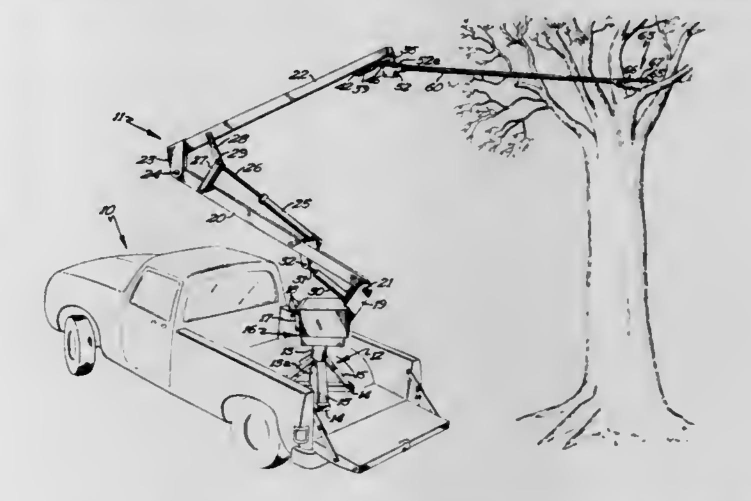

1. A vehicle mounted boom assembly mounted on a vehicle and including a support structure,
an elongate lower boom having one end thereof pivotally mounted on said support structure for vertical movement relative thereto,
an upper boom member having one end thereof pivotally connected to the other end of said lower boom member for vertical pivotal movement therebetween,
a pair of crank arms fixedly connected to one of said boom members and being pivotally connected together,
power means mounted on said lower boom member and being connected with said crank arms for shifting said upper boom member relative to said lower boom member,
a support bracket pivotally mounted on said upper boom member adjacent the other end thereof for swinging movement of the bracket relative to said upper boom member about a first axis,
a first hydraulic piston and cylinder mounted on said upper boom member and being connected with said support bracket for shifting the latter about said first axis,
a housing pivotally connected to said bracket for said pivotal movement relative to said bracket about a second axis disposed substantially normal to said first axis,
a second hydraulic and piston cylinder mounted on said bracket and connected with said housing for shifting the housing relative to said bracket about said second axis,
an elongate tubular support arm having one end thereof projecting into said housing and extending longitudinally therefrom, said tubular support arm being revolvable about its longitudinal axis relative to said housing,
an elongate chain saw assembly mounted on the outer end of said tubular arm,
and a power shifting mechanism in said housing operatively interconnected with said tubular support arm and being operable for rotating the support arm about its longitudinal axis.

4,063,360

ORTHODONTIC BRACKET ASSEMBLY AND METHOD FOR ATTACHMENT

Duncan E. Waller, Milford, Del., assignor to Dentsply Research & Development Corporation, Milford, Del.

Filed Apr. 25, 1974, Ser. No. 464,278

Int. Cl.^{2} A61C *7/00*

U.S. Cl. 32—14 A **4 Claims**

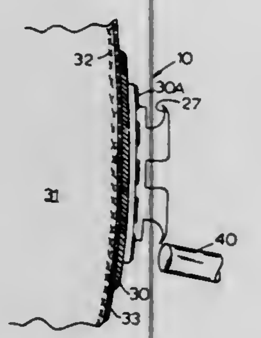

1. A method of constructing an orthodontic appliance assembly comprising the steps of

A. Applying a photopolymerizable adhesive to an anchor tooth;

B. Placing a metal bracket including a base having a front and a rear surface with holes extending therethrough against the anchor tooth so that the rear surface contacts said adhesive with sufficient pressure to cause said adhesive to extrude through the holes and to flow on the front surface of the base to form heads having greater cross-sections than the diameters of the holes, and

C. Applying a source of ultraviolet radiation energy to the adhesive heads extruded through the holes to polymerize the adhesive, whereby the bracket is locked to the anchor tooth.

4,063,361

POWER TRAIN FOR TWO-WHEEL TRACTOR

John H. Hyler, and Edward G. Orth, both of Peoria, Ill., assignors to Westinghouse Air Brake Company, Pittsburgh, Pa.

Filed Jan. 3, 1977, Ser. No. 756,128

Int. Cl.^{2} E02F *3/64;* **B60G** *11/26*

U.S. Cl. 37—129 **10 Claims**

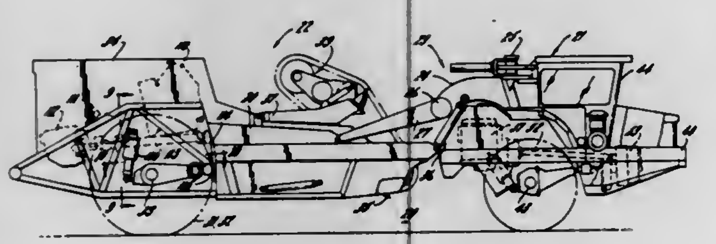

4. An earthmoving machine comprising, in combination, a scraper bowl having a frame and scraper blade, the frame being supported on a pair of ground-engaging wheels, a tractor having a frame and pair of ground-engaging wheels, a draft frame interposed between the scraper bowl and tractor including a vertically hinged gooseneck having rigidly secured thereto a pair of rearwardly extending draft links, the latter being pivoted at their rear ends to the sides of the bowl, a bowl actuator interposed between the draft frame and the bowl to determine the scraping depth of the blade, a tractor axle assembly including an axle as well as an axle housing and a forwardly projecting tongue rigidly secured thereto, the tractor and scraper bowl each having an engine coupled to the associated ground-engaging wheels, the tractor engine being mounted at the rear of the tractor frame, a transmission at the front of the tractor frame having its input coupled to the engine, a drive shaft extending rearwardly from the transmission and coupled to the tractor axle, the tractor axle assembly having a alined front and rear pivot connections defining an axle roll axis, the front pivot connection being coupled to the frame, a transversely extending panhard type link interposed between the rear pivot connection and the frame so that the link retains the axle assembly for moving laterally while accommodating vertical and rolling movement of the assembly as the machine passes over irregular ground, a spring suspension device interposed between the axle assembly and the tractor frame, the drive shaft having universal joints at its ends, the forward pivot connection of the axle assembly being positioned substantially midwayof the universal joints for substantially equal angular deflection at the joints upon a given amount of relative vertical movement of the tractor axle assembly.

4,063,362

MEASURING INSTRUMENT

Clifford Roy Amsbury, King's Newton, and Eric Warren, Etwall, both of England, assignors to Rolls-Royce Limited, London, England

Filed Mar. 29, 1976, Ser. No. 671,490

Claims priority, application United Kingdom, Apr. 3, 1975, 13587/75

Int. Cl.^{2} G01B *3/20, 7/02*

U.S. Cl. 33—147 J **8 Claims**

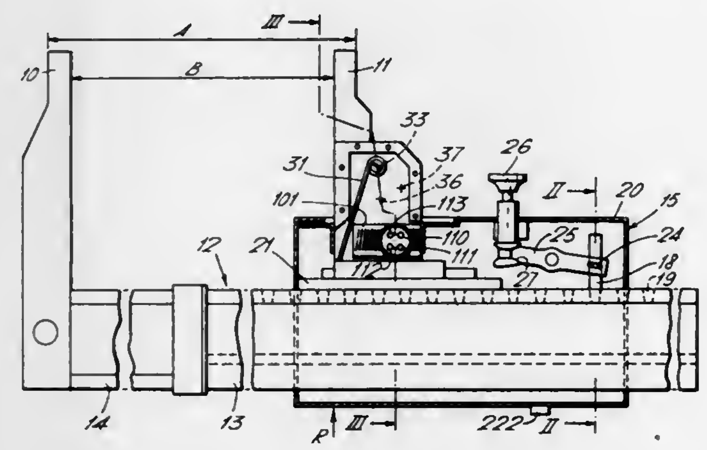

1. An instrument for measuring linear dimensions comprising:

a pair of anvils for contacting a work piece across a dimension to be measured;

a longitudinal bar extending the length of the instrument;

a first of said anvils being secured to said bar;

a carriage member movable along said bar;

detent means operatively positioning said carriage on said bar at any one of a series of equally spaced positions along said bar, said positions corresponding to units of measurement relative to said first anvil;

a second of said anvils being mounted on said carriage for movement parallel to a longitudinal length of said bar over a distance of at least one of said units;

a first means provided for indicating the position of said carriage relative to said first anvil

a second means for indicating the position of said second anvil relative to said carriage, said second means being electronically operable, said first means and said second means being in said units of measurement and having the indicating portions thereof juxtaposed to provide a composite indication of measurement;

said longitudinal bar comprising a first portion on which said carriage is movable over a first range of said units of measurement, and a series of extension portions, each capable of being detachably secured respectively to the first portion of said bar and to said first anvil whereby said first anvil is capable of being positioned at any one of a series of different distances from said first portion dependent upon the one of said extension portions used to give the instrument a facility to measure a series of different ranges of said units of measurement.

3. An instrument for measuring linear dimensions comprising:

a pair of anvils for contacting a work piece across a dimension to be measured;

a longitudinal bar extending the length of the instrument;

a first of said anvils being secured to said bar;

a carriage member movable along said bar;

detent means operatively positioning said carriage on said bar at any one of a series of equally spaced positions along said bar, said positions corresponding to units of measurement relative to said first anvil;

said longitudinal bar comprising a first portion on which said carriage is movable over a first range of said units of measurement, and a series of extension portions, each capable of being detachably secured respectively to the first portion of said bar and to said first anvil whereby said first anvil is capable of being positioned at any one of a series of different distances from said first portion dependent upon the one of said extension portions used to give the instrument a facility to measure a series of different ranges of said units of measurement;

a second of said anvils being mounted on said carriage for movement parallel to a longitudinal length of said bar over a distance of at least one of said units;

a first means provided for indicating the position of said carriage relative to said first anvil, said first means for indicating the position of the carriage relative to the first anvil comprising a member carrying a series of scales and means for automatically selecting the appropriate scale, said selection means being operable upon securing the selected extension portion to the first portion of the longitudinal bar whereby the select the appropriate scale for the selected extension portion;

a second means for indicating the position of said second anvil relative to said carriage, both of the indications of said first means and said second means being in said units of measurement to thereby indicate the dimension to be measured in a form of a composite indication.

4,063,363

ROLL GAP MEASUREMENT

Robert James Harlow, Poole, England, assignor to Loewy Robertson Engineering Company Limited, Poole, England

Filed Jan. 12, 1976, Ser. No. 648,515

Claims priority, application United Kingdom, Jan. 14, 1975, 1513/75

Int. Cl.^{2} B21B *37/08*

U.S. Cl. 33—182 **7 Claims**

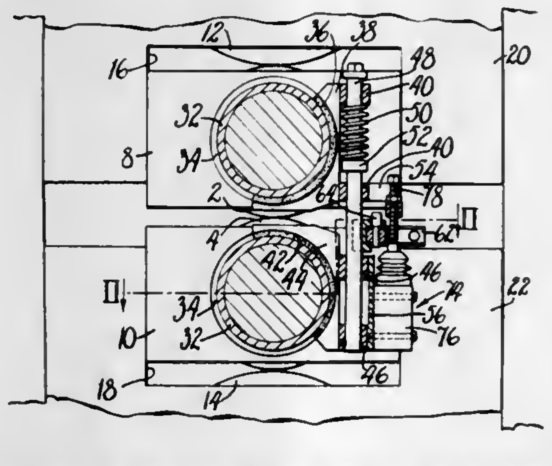

1. The improved apparatus for indicating the extent of the gap between the work rolls of a rolling mill having a pair of work rolls arranged with their axes of rotation in a vertical plane, which apparatus comprises:

support means secured to the mill adjacent one end of the rolls and on one side of the vertical plane containing the roll axes,

a vertical post positioned on said side of the vertical plane,

a pair of structures mounted on the post and each having an arcuate shoe which projects into the space between the rolls at said end thereof,

means removably mounted on the support means which applies a horizontal biassing force to said post and thereby urges one of the shoes into slidable engagement with a part of the upper work roll which is immediately below the axis of said upper work roll, and the other shoe into slidable engagement with a part of the lower work roll which is immediately above the axis of said lower work roll,

an electrical transducer having a first elongate part movable in the direction of its length with respect to a second part of the transducer, said second part being carried by one of said structures on said one side of the vertical plane and in a position away from the rolls, and the first part being positioned to engage the other structure and move in a vertical direction in response to a variation in the gap between the work rolls, thereby varying the electrical output of said transducer.

4,063,364

TURNING RADIUS PLATES AND SCALES FOR AUTOMOTIVE WHEEL ALIGNMENT MEASUREMENTS

Charles W. MacMillan, 3400 20th St. Ct., Rock Island, Ill. 61201

Filed May 14, 1976, Ser. No. 686,403

Int. Cl.^{2} G01B *5/24*

U.S. Cl. 33—203.14 **2 Claims**

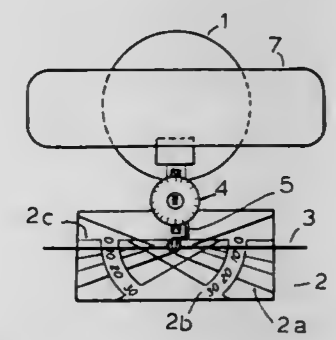

1. In a vehicle wheel alignment test system for determining caster, camber, steering-axis-inclination, and steering geometry angles of a pair of dirigible wheels the combination comprising:

a turntable consisting of a top flat plate superimposed and slidable on a lower flat plate, said top plate having hole means therein; a detachable cleat having a base portion, an upwardly extending portion for contacting an edge of said lower plate and a portion extending normal to said upwardly extending portion which portion has downwardly extending means for extending into said hole means;

a steering angle indicating means comprising a scale and an indicator, said scale comprising a base line and two symmetrical sets of lines whose extensions intersect said base line at different points there along; and, a substantially horizontal indicator rod suspended immediately above said scale and adjustably supported by a vehicle wheel for visual parallel alignment of said rod with the lines of said scale to determine the turning angle of said wheel.

4,063,365

ORIENTATION DETECTION AND ALIGNMENT METHOD AND APPARATUS

Evan Leon Hopkins, 11352 Oxford Drive; Evan Lloyd Hopkins, 1701 West 13th St., and Jerry L. Wedel, 705 Peyton, all of Emporia, Kans. 66801

Division of Ser. No. 207,829, Dec. 14, 1971, Pat. No. 3,822,944. This application June 18, 1974, Ser. No. 480,490

Int. Cl.^{2} G01B *5/24, 13/18, 19/80;* **G01J** *1/00*

U.S. Cl. 33—288 **3 Claims**

1. Apparatus for aiming a vehicle headlamp of the type including means defining a reference surface having a predetermined orientation relative to an optical axis of the headlamp, the apparatus comprising:

aiming means having an aiming axis and adapted to be retained in engagement with the reference surface defining means on the headlamp, the aiming axis of said aiming means thereby being disposed at a predetermined orientation relative to the reference surface;
first means, carried by said aiming means in a predetermined orientation relative to said aiming axis, for detecting the orientation of said aiming axis relative to the true horizontal and generating a first electrical signal related thereto;
second means carried by said aiming means in a predetermined orientation relative to said aiming axis, for detecting the orientation of said aiming axis relative to the longitudinal axis of the vehicle and generating a second electrical signal related thereto;

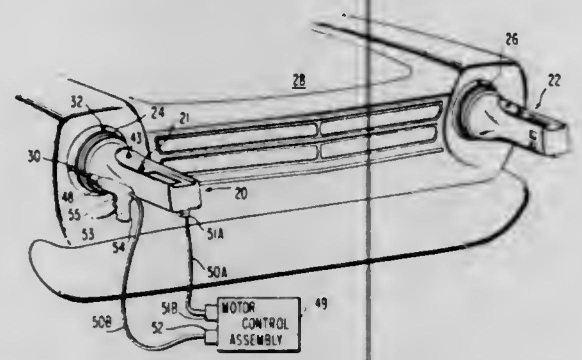

adjusting tool means responsive to a selected one of said first and second electrical signals for modifying one of the position of the vehicle headlamp relative to the true horizontal and the position of the vehicle headlamp relative to the longitudinal axis of the vehicle; and,
a position responsive switch means carried by said adjusting tool means, said one of said first and second signals being automatically selected responsively to the position of said switch means.

4,063,366
GRADE LEVEL
Phillip A. Bane, R.R. No. 2, Oakland, Iowa 51560
Filed June 1, 1976, Ser. No. 691,823
Int. Cl.^{2} G01C *9/12*
U.S. Cl. 33—396 **1 Claim**

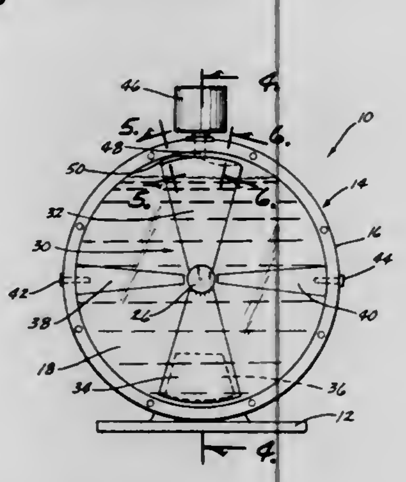

1. A grade level comprising,
a hollow, fluid-tight cylindrical housing having its central axis disposed in a horizontal attitude, said housing comprising an annular wall portion and end members mounted on opposite sides of said wall portion,
a horizontally disposed shaft centrally mounted in said housing and extending between said end members,
a float-weight combination operatively rotatably mounted on said shaft,
a fluid in said housing substantially filling the interior thereof, said float-weight having a width substantially equal to the distance between said end members,
means for causing said float-weight to normally be positioned in an upright position relative to the shaft axis,
sensing means for sensing the position of said float-weight relative to said housing,
and visual read-out means operatively connected to said sensing means for indicating the attitude of said housing and support means relative to horizitonal,
said float-weight comprising a float portion extending upwardly from said shaft and a couterbalancing weight extending downwardly from said shaft,
said sensing means comprising a cam surface on the upper end of said float portion, a linear variable differential transformer on the upper end of said housing and having a core in engagement with said cam surface, and electrical circuit means connecting said transformer to said read-out means.

4,063,367
METHOD OF AND APPARATUS FOR DRYING LIQUID FROM A LIQUID-SOLID COMPOSITE AND SEALING THE REMAINING SOLID MATERIAL
Leon Talalay, 1 Chestnut Lane, Woodbridge, Conn. 06525
Filed Sept. 29, 1975, Ser. No. 617,667
Int. Cl.^{2} F26B *5/04*
U.S. Cl. 34—15 **15 Claims**

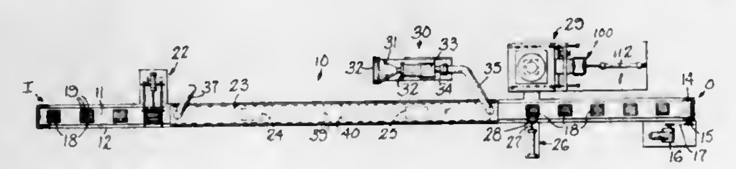

1. A method of drying liquid from a liquid-solid composite in a round container comprising the step of directing a relatively high velocity stream of dry air over said container in a housing substantially parallel to the surface of the liquid in said container to create a vortex in said container and reduce the pressure in said container while maximizing the area of the exposed liquid to thereby evaporate the liquid from said container.

4,063,368
LASER WEAPONS SIMULATION SYSTEM
Robert L. McFarland, Carmel, and Stephen C. Bradshaw, Salinas, both of Calif., assignors to Manned Systems Sciences, Inc., Westlake Village, Calif.
Filed Aug. 16, 1976, Ser. No. 714,790
Int. Cl.^{2} F41G *3/26*
U.S. Cl. 35—25 **16 Claims**

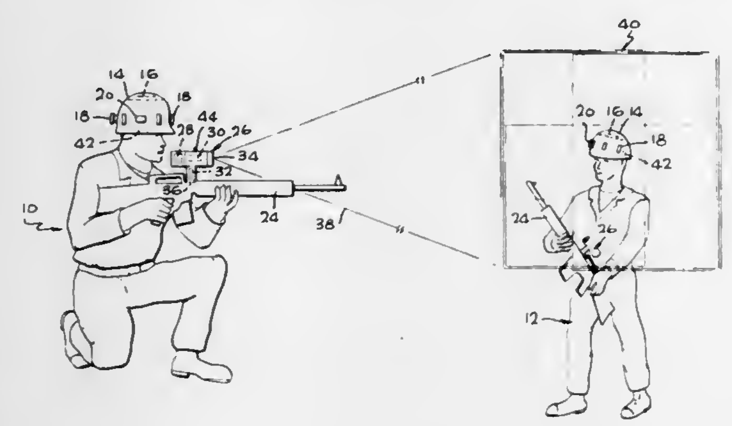

1. A fire simulator device adapted to be mounted on a weapon for emitting an output signal in response to mechanical force generated by the firing mechanism of the firearm, comprising:
an adjustable laser transmitter means for providing a plurality of sequentially transmitted beams of light;
means for controlling timing of said beams of light onto an exposed object;
first circuit means coupled to the output of said laser transmitter means for forming said plurality of sequentially transmitted beams of light into a four-beam overlapping pattern of beams; and
second circuit means associated with said laser transmitter means for triggering the latter means in response to an electrical signal upon firing the weapon.

4,063,369
VISUAL COMMUNICATION TOOL FOR CHILDREN
Mary Louise Hart, 481 Dulles Road, Des Plaines, Ill. 60016
Filed Dec. 15, 1975, Ser. No. 640,622
Int. Cl.^{2} G09B *19/00*
U.S. Cl. 35—35 E **7 Claims**

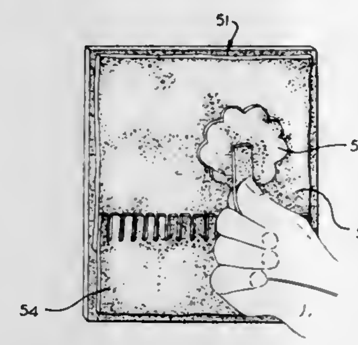

1. A visual communication tool for children comprising:
a binder means having a front cover, a rear cover and cover attachment means attaching said front cover to said rear cover,
a plurality of display mounting leaves mounted in said binder means,
said display mounting leaves being pivotally constrained within said binder means, thereby enabling access to any one of said plurality of leaves without removal from said binder means;
each of said display mounting leaves providing an unobstructed area in which a user may assemble one or more component story figures as desired;
component story figures which are placed on said unobstructed areas of said mounting leaves to illustrate a story as composed by the user of said tool;
each of said component story figures having a distinct shape representative of a particular story figure without alphabetical indicia,
said plurality of said display mounting leaves and said component story figures portraying a schematic expression continuously from the first of said mounting leaves through the remainder of said mounting leaves as needed within said binder means;
restraining means for securely attaching said component story figures to said plurality of display mounting leaves and for enabling overlapping attachment of component story figures to one another, thereby maintaining said figures in place on said leaves when the binder is open or closed until said component story figures are manually removed by said user from said mounting leaves;
a plurality of mounting pockets on said binder means in which said component story figures are stored before placement on said display mounting leaves and after removal of said story figures from said mounting leaves,
said mounting pockets having indicia associated with said story figures thereby indicating which of said mounting pockets is to contain one of said story figures,
said mounting pockets being mounted on the inside surfaces of one or more of said front and rear covers respectively,
said component story figures having shapes and representing objects which follow one particular theme, thereby limiting the story sequence to a particular topic as expressed by the user.

4,063,370
TAPE CASSETTES HAVING INDICATIONS FOR BLIND USE
Shoichi Saito, Tokyo, Japan, assignor to Olympus Optical Co., Ltd., Tokyo, Japan
Filed July 6, 1976, Ser. No. 702,583
Claims priority, application Japan, July 9, 1975, 50-95926[U]; July 14, 1975, 50-96731[U]
Int. Cl.^{2} G09B *21/00*
U.S. Cl. 35—35 A **9 Claims**

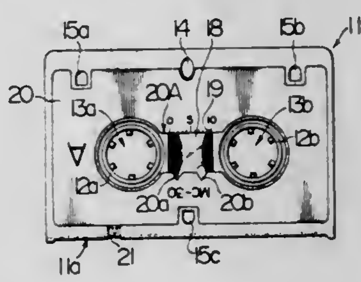

1. A tape cassette having at least one finger readable marking, comprising:
a tape cassette having at least one major surface;
a transparent window formed in said at least one major surface, said transparent window being located at a position relative to the position of a magnetic recording tape housed in said cassette which will permit viewing of the movement of at least a portion of said tape in said cassette;
a label applied to said at least one major surface of said cassette, said label having an opening therein, said opening being defined by inner peripheral edges of said label and overlapping said transparent window a sufficient amount to permit viewing of the movement of at least a portion of said tape, said label also including at least one finger readable tape-identifying indicia formed along and defined by said inner peripheral edges of said label, the shape and number of said at least one finger readable indicia being indicative of some quality of said tape such as the total playing time or running speed thereof.

4,063,371
AIR-FLOW SHOE
Vijay Batra, Brockton, Mass., assignor to Morse Shoe, Inc., Canton, Mass.
Filed May 17, 1976, Ser. No. 687,252
Int. Cl.^{2} A43B *7/06*
U.S. Cl. 36—3 B **20 Claims**

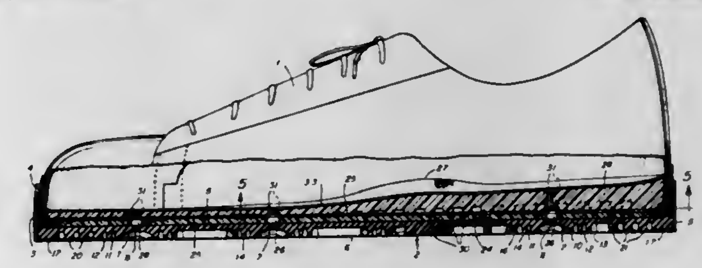

1. A vented athletic shoe comprising:
a shoe upper,
an outersole of flexible compressible material engaging the periphery of said upper and having an outer surface and an inner surface,
means forming a plurality of fluid passages through said outersole from said inner surface to said outer surface, and said outer surface formed with a plurality of concavities, each of said concavities respectively aligned with different ones of said passages and adapted to form a chamber from which air is forced into and through said passage associated with said chamber as the periphery of said chamber engages and is pressed toward a surface.

4,063,372
GOLF SPIKE
Arden B. MacNeill, Sudbury, Mass., assignor to MacNeill Engineering Company, Waltham, Mass.
Filed Oct. 7, 1975, Ser. No. 620,415
Int. Cl.² A43B *5/00*; A43C *15/00*
U.S. Cl. 36—127 **4 Claims**

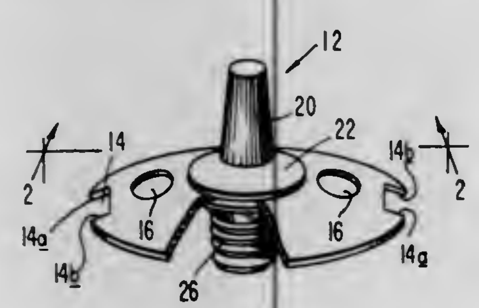

1. A locking golf spike, comprising:
A. a plate defined by first and second opposed faces and
 1. having, at the outer periphery thereof, a plurality of notches from which the plate material is entirely removed to thereby accomodate inflow of shoe sole material for locking the plate to said sole when the plate and sole are tightly pressed together,
 2. defining a central aperture for receiving a spike member therethrough, and
B. an elongated spike member
 1. having a threaded portion thereof extending inwardly of said plate through said aperture for securing to a shoe with the periphery of said plate pressing into the sole of said shoe,
 2. having a flange formed thereon intermediate the ends thereof and a plurality of ribs on a face thereof directed toward said plate when assembled therewith,
C. said plate has a centrally-formed well surrounding said aperature on a first face thereof for receiving said flange therein with said ribs contacting the surface of said well to secure said spike member thereto.

4,063,373
MECHANISM TO RESTRAIN SLAMMING OF SHOVEL DIPPER DOORS
Donald J. Greer, Danville, Ill., and John R. Olds, Veedersburg, Ind., assignors to Esco Corporation, Portland, Oreg.
Filed Jan. 28, 1977, Ser. No. 763,356
Int. Cl.² E02F *3/46*
U.S. Cl. 37—115 **9 Claims**

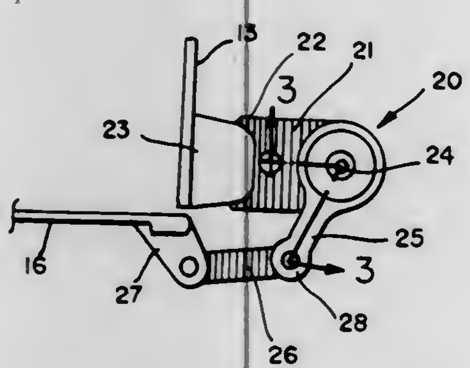

1. In a shovel dipper having a generally box shape defined by interconnected front, back and side walls and an open top, a door pivotally attached to said back wall, and means operably associated with said dipper for opening and closing said door, the improvement comprising an energy dissipation mechanism to restrain slamming of said door upon closing thereof, said mechanism including a first arm connected at one end thereof to said back wall and a second arm connected at one end thereof to said door, said first and second arms on the other ends thereof being in superposed relation and having a friction liner therebetween, and Belleville spring-loaded bolt means pivotally securing said other ends together whereby said spring is adapted to exert substantially the same restraining force during a substantial portion of the life of said liner.

4,063,374
GRAVE OPENING AND CLOSING MACHINE
Corinthian Washington, P.O. Box 646, Mansfield, La. 71052
Filed Dec. 3, 1976, Ser. No. 747,316
Int. Cl.² E02F *5/22*
U.S. Cl. 37—142.5 **9 Claims**

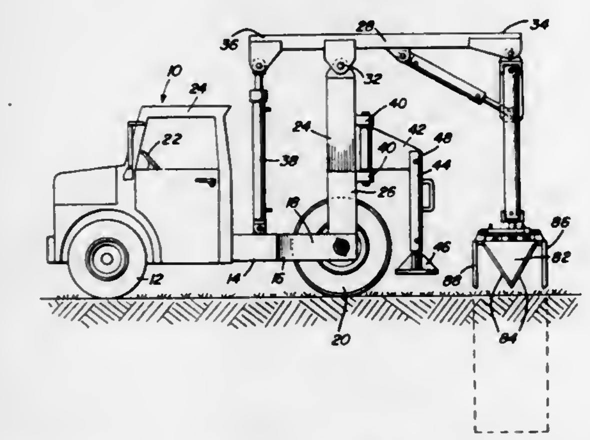

1. In combination, a wheeled vehicle including a plurality of peripheral portions, a generally horizontal support beam pivotally supported from said vehicle with one end thereof projecting outwardly of one peripheral portion of said vehicle and vertical oscillation of said one end of said beam relative to said vehicle, first motor means connected between said beam and said vehicle for effecting selected angular displacement of said beam relative to said vehicle, an upstanding support structure pivotally supported at its upper end from said one end of said beam for angular displacement relative thereto about a horizontal axis extending transversely of said beam, a downwardly opening clam-type digging head carried by the lower end of said support structure, second motor means connected between said beam and said support structure for angularly displacing the latter relative to the former, said support structure including a pair of parallel elongated and independently longitudinally extendible upstanding support members suitably rigidly interconnected at their upper end portions for swinging in unison about said horizontal transverse axis and with said support members spaced apart in a direction paralleling said axis, said head including an elongated mounting portion paralleling the axis of oscillation of said support structure relative to said one end of said beam, said mounting portion including opposite side longitudinal marginal portions having depending digging blades supported therefrom for angular displacement about axes extending longitudinally of said longitudinal marginal portions, motor means operatively connected between said depending blades for pivoting the latter toward downwardly convergent positions, the lower end portions of said support members being pivotally anchored to longitudinally spaced midportions of said mounting portion of said head for oscillation relative thereto by pivot connections defining axes of oscillation extending transversely of said mounting portion and disposed at generally right angles relative to said support members and said horizontal transverse axis, one of said pivot connections including means operative to allow shifting of the corresponding axis relative to and longitudinally of said head.

4,063,375
CONVEYOR FOLDING AND MOLDBOARD OPERATION FOR EXCAVATING AND LOADING SYSTEMS
Charles R. Satterwhite, Dallas, Tex., assignor to Unit Rig & Equipment Co., Tulsa, Okla.
Continuation of Ser. No. 554,671, March 3, 1975, abandoned, which is a continuation-in-part of Ser. No. 400,043, Sept. 24, 1973, Pat. No. 3,897,109, which is a continuation-in-part of Ser. No. 238,089, March 28, 1972, abandoned. This application Feb. 23, 1976, Ser. No. 660,515
Int. Cl.² E02F *3/24*
U.S. Cl. 37—190 **24 Claims**

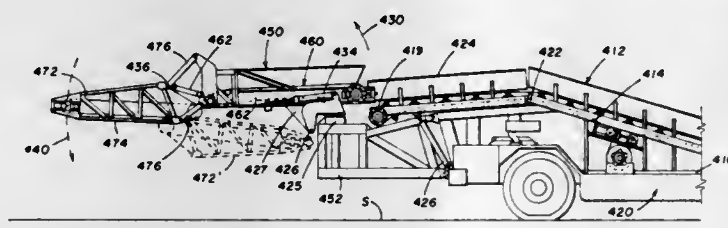

1. An excavating and loading system comprising: an excavating wheel assembly having an axle means and three rigid excavating wheels rotatably supported on the axle means;
- each of said excavating wheels including a plurality of digging buckets each having a cutting edge which extends to a stationary wall and a wall mounted for pivotal movement from a material receiving position to a material dumping position;
- supporting and housing means extending between the excavating wheels and connected to the axle means for supporting the excavating wheel assembly;
- said three excavating wheels including a center excavating wheel comprising digging buckets spanning continuously between points immediately adjacent to the supporting and housing means and two side excavating wheels each comprising digging buckets spanning continuously from points immediately adjacent to the supporting and housing means to points defining the outer ends of the excavating wheel assembly;
- means including a drive mechanism extending through the supporting and housing means for rotating the excavating wheels so that the digging buckets follow a circular path;
- means located within the margins of the excavating wheel assembly and responsive to rotation of the excavating wheels for positively positioning the movable wall of each bucket of the excavating wheels in the material receiving position when the bucket is in the lower and forward portion of the path and for positively positioning the movable wall in the material dumping position when the bucket is in the upper and rearward portion of the path;
- a vehicle supporting the excavating wheel supporting and housing means and thereby positioning the excavating wheel assembly at the front of the vehicle in engagement with material to be excavated;
- main conveyor means mounted on the vehicle behind the excavating wheel assembly for movement around a course including a relatively low portion positioned to receive material from each digging bucket of the center excavating wheel upon the positioning of the movable wall of the bucket in the material dumping position and a relatively high material discharge end portion located rearwardly on the vehicle from the lower portion;
- means positioned on the vehicle behind the excavating wheel assembly to receive material from each digging bucket of the outside excavating wheels upon the positioning of the movable wall of the bucket in the material dumping position and for directing the material to the main conveyor means;
- support means mounting the discharge end of the main conveyor for folding movement in a path downward and toward the rear;
- auxiliary conveyor means mounted on the vehicle at the rear of the main conveyor for receiving material from the main conveyor and for delivering and discharging the material beyond the rear of the vehicle, a material receiving end on the auxiliary conveyor positioned under the discharge end of the main conveyor and a discharge end on the auxiliary conveyor positioned upward and rearward of the material receiving end; and
- support means mounting the material receiving end of the auxiliary conveyor for movement upward and out of the folding path of the discharge end of the main conveyor whereby the discharge end of the main conveyor may be folded down below the material receiving end of the auxiliary conveyor and the material receiving end of the auxiliary conveyor may be folded down adjacent to and over the material discharge end of the main conveyor to thereby lower the clearance height of the vehicle during transportation.

4,063,376
CLOTHING PRESSER
Kei Horiuchi, Tokyo, Japan, assignor to Toshin Seiki Kabushiki Kaisha, Tokyo, Japan
Filed Jan. 10, 1977, Ser. No. 758,310
Claims priority, application Japan, Jan. 20, 1976, 51-5310
Int. Cl.² D06F *71/08*
U.S. Cl. 38—41 **3 Claims**

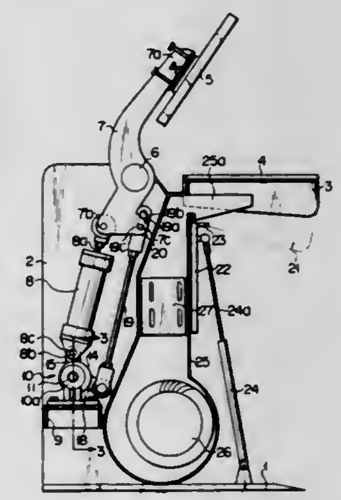

1. A clothing presser comprising:
- a base;
- upright support plates mounted on the base;
- a stationary ironing buck fixed to the upright support plates;
- a movable ironing head for pressing the stationary ironing buck;
- a rocking arm having the movable ironing buck fixed to one end thereof and adapted to swing about a shaft provided on the upright support plates;
- a piston-cylinder assembly connected to the other end of said rocking arm for swinging the rocking arm; and
- a toggle mechanism comprising a rotary shaft rotatably mounted on the upright support plates, an eccentric cam fixed to the rotary shaft, a ring member surrounding the eccentric cam and supporting the piston-cylinder assembly to cause the piston-cylinder assembly to move in a longitudinal direction thereof by the rotation of the eccentric cam, an actuating lever extending crosswise of the piston-cylinder assembly from the rotary shaft, and a connecting rod disposed substantially in parallel with the piston-cylinder assembly, said connecting rod having one end operatively connected to that intermediate portion of the rocking arm which is situated between the shaft and said other end of the rocking arm and having the other end connected to the free end of the actuating lever.

4,063,377
CHANGEABLE DISPLAY DEVICE
Marlin E. Hukill, P.O. Box 466, Seymour, Ind. 47274
Filed Mar. 29, 1976, Ser. No. 671,586
Int. Cl.^{2} G09F *11/00*
U.S. Cl. 40—28 C **6 Claims**

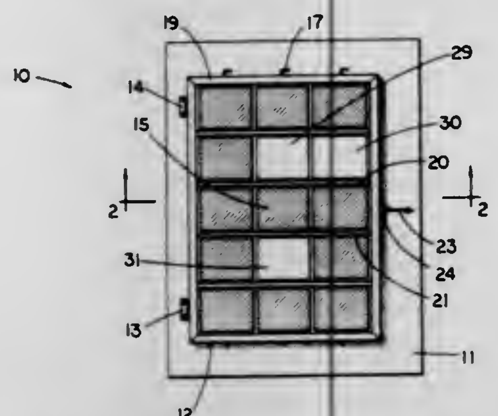

1. A changeable display device which comprises:
a support member including a back wall and a frame;
several generally flat display elements having first and second sides of contrasting first and second colors, respectively, said display elements being connected to said support member to form a two-dimensional array, each display element having a free-swinging edge and an opposite, attaching edge, each display element being rotatable about the attaching edge, said back wall being positioned to engage the free-swinging edge of each of said display elements when said display element is rotated in the direction of said back wall; and
said frame including several mutually-facing first and second channels having first and second ends, each of said display elements including first and second projections extending from and being generally co-linear with the attaching edge, the first and second projections of each associated display element being operable to slide within the associated first and second channels, respectively, each of said display elements having a first display position in which the associated first and second projections are near the first ends of the associated channels and the first side of said display element faces said back wall, and having a second display position in which the associated first and second projections are near the second ends of the associated channels and the second side of said display element faces said back wall, said device further comprising front retaining means for retaining said display elements in one of the display positions.

4,063,378
PICTURE FRAME
Louis C. Burke, 242 Hartford Ave., East Granby, Conn. 06026
Filed Oct. 18, 1976, Ser. No. 733,037
Int. Cl.^{2} G09F *1/12*
U.S. Cl. 40—156 **10 Claims**

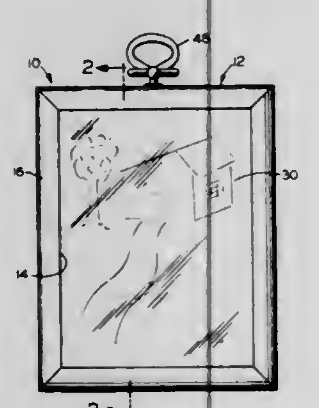

1. An assembly for displaying one or more panels comprises:
a. a frame member having an outer periphery, a front face and an oppositely facing rear face;
b. a display opening extending axially through said frame member, the perimeter of said display opening defining the inner periphery of said frame member;
c. a retaining shoulder formed about said perimeter of said display opening and adapted to have seated thereon a peripheral edge portion of the frontmost one of said one or more panels, said retaining shoulder being defined by (1) a rearwardly facing ledge disposed intermediate of said front face and rear face and (2) a side wall extending from said ledge towards said rear face and terminating therein so that said display opening is larger in the rear face portion thereof than it is in the front face portion thereof;
d. a first locking formation comprising one of a tongue and a groove, said first locking formation being disposed about the perimeter of said display opening and axially rearwardly of said ledge to define between said ledge and said first locking formation a mounting space to receive said panels;
e. at least one closure member, a portion at least of which is flexible, having edges and being of bowed resilient construction in the free state, and affixed to said frame member by engagement of said first locking formation with a second locking formation as defined herein below;
f. said second locking formation being complementary to said first locking formation and comprising the other of said tongue and groove, said second locking formation being located on said closure member adjacent at least two opposite ones of said edges thereof; said first and second locking formations being engageable with each other by flexing a portion of said closure member to engage said second locking formation thereof with respective portions of said first locking formation whereby said closure member is locked onto said frame transversely across at least a portion of the rear face portion of said display opening and in contact with and deformed against the rearmost one of said one or more panels to bias said one or more panels against said ledge and thereby retain said panels within said mounting space.

4,063,379
FORE END ASSEMBLY FOR A FIREARM
William B. Ruger, Southport, Conn., assignor to Sturm, Ruger & Co., Inc., Southport, Conn.
Filed Apr. 8, 1976, Ser. No. 674,880
Int. Cl.^{2} F41C *23/00*
U.S. Cl. 42—75 D **5 Claims**

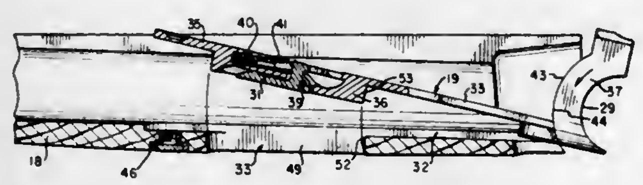

1. In a break-open firearm having a frame, at least one barrel pivotally mounted on the frame, and a fore end assembly releasably secured to the underside of the barrel; the fore end assembly comprising a wooden fore end stock having a channel-shaped transverse cross-section and a latch plate receiving opening formed in the bottom wall thereof, a metal latch plate removably secured to the bottom wall of said fore end stock, and latch means mounted on the latch plate for releasably securing the fore end assembly to the underside of the barrel;
the improvement which comprises an integrally formed metal latch plate having an elongated main body portion, a latch mechanism portion disposed intermediate the forward and rearward ends of the main body portion and a head portion disposed at the rearward end of the main body portion of the latch plate, the latch mechanism portion extending downwardly below the level of the under surfaces of the forward and rearward ends of the main body portion of the latch plate and being adapted to be snugly received in the latch plate receiving opening formed in the fore end stock; the latch plate receiving opening of the fore end stock and the latch mechanism portion of the latch plate being formed with longitudinally extending vertical side walls that are disposed substantially parallel to each other and to the longitudinal centerline of the firearm, the transverse forward facing rear end wall of said latch plate receiving opening and the abutting transverse rearward facing rear end wall of said latch mechanism portion extending vertically the full depth of the bottom wall of said fore end stock and being substantially planar and disposed substantially perpendicular to the longitudinal centerline of the firearm.

4,063,380
NO STRESS DIP NET
John S. Grim, Kerr Road, Rhinebeck, N.Y. 12572
Continuation-in-part of Ser. No. 425,187, Dec. 17, 1973, abandoned. This application Dec. 6, 1974, Ser. No. 530,055
Int. Cl.^{2} A01K *77/00*
U.S. Cl. 43—11 **3 Claims**

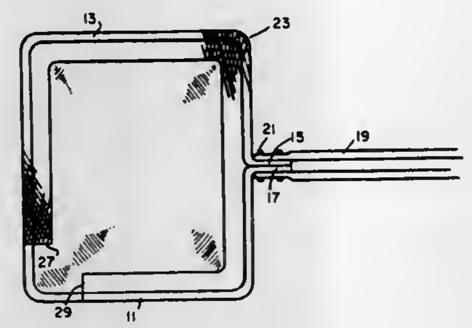

1. A dip net comprising in combination
a handle member and a net assembly,
said net assembly including a frame connected to said handle member,
said net assembly being composed of separate sections of water permeable and water impermeable material interconnected to define a pocket configuration,
said pocket configuration being readily deformable in a water environment into a water retaining configuration including a lower porion adpated to provide and maintain a continuous water environment for fish within said pocket,
said configuration of said impermeable material extending upwardly from said pocket to said frame member and adapted to form a pour spout about one area of said frame, the remainder of said frame having sections of said water permeable portion associated therewith,
said water permeable section being adapted to facilitate capture of fish from a water environment and removal of excess water from said net assembly,
said configuration of said impermeable section being adapted to provide and maintain a continuous water environment for fish during capture and transfer of said fish from one water environment to another,
said frame being of generally rectangular configuration and said upwardly extending impermeable material encompassing one of the corners of said frame to form said pour spout.

4,063,381
ARTICULATED PUPPET
Jorge M. Deulofeu, Avda Jose Antonio No. 292, Barcelona, Spain
Filed July 20, 1976, Ser. No. 707,024
Claims priority, application Spain, July 24, 1975, 214210; Dec. 24, 1975, 217678; Dec. 27, 1975, 217725; May 1, 1976, 217881
Int. Cl.^{2} A63H *3/00*
U.S. Cl. 46—22 **5 Claims**

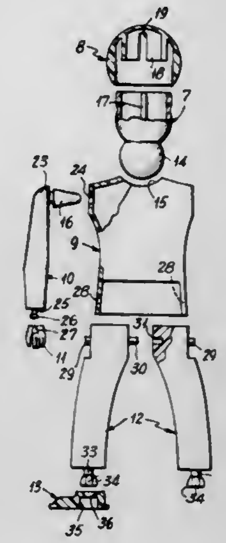

1. An articulated puppet having a hollow torso member of resilient material, said torso member being open at the bottom;
aligned openings through the sides of said torso member adjacent the open bottom thereof;
a pair of puppet legs having inner abutting surfaces at their upper ends, a first pivot pin projecting from one of said surfaces into an opening in the other surface pivotally joining said legs;
a second pivot pin projecting outwardly from each of said legs, in axial alignment with said first pivot pin, and extending into said aligned openings in said torso member whereby said aligned pins define simulated hip joints for said puppet, said open bottom of said torso member being resiliently distortable to permit engagement and disengagement of said pivot pins in said aligned openings.

4,063,382
THROW RING
David F. McCallum, Edmonton, Canada, assignor to The Raymond Lee Organization, Inc., New York, N.Y.
Filed Nov. 16, 1976, Ser. No. 742,332
Int. Cl.^{2} A63H *27/00*
U.S. Cl. 46—74 D **4 Claims**

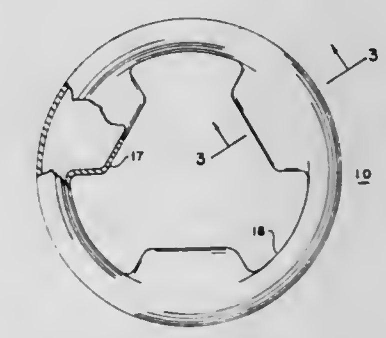

1. A throw ring in the shape of a tube formed as a continuous ring, with a plurality of spaced fins fixed to the inside circumferential surface of the ring, with each fin shaped with a convex external surface to provide aerodynamic lift properties to the ring, when rotated, with each said fin radially projecting from the inside circumferential surface of the ring as an integral extension of the adjacent surface of the ring for a fractional arcuate portion of the circumference of said surface, said fins spaced substantially about said inside circumferential sur-

face, with said fins bounding a completely open central recess portion.

4,063,383
PRODUCTION OF MUSHROOM SPAWN
Joseph Green, Maidenhead, England, assignor to H. J. Heinz Company Limited, Hayes, England
Filed Apr. 16, 1976, Ser. No. 677,648
Claims priority, application United Kingdom, Apr. 18, 1975, 16140/75
Int. Cl.² A01G *1/04*
U.S. Cl. 47—1.1 **20 Claims**
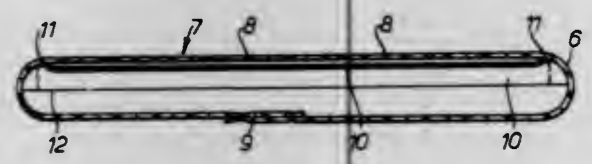
1. A sterilizable bag, comprising a sheet of transparent plastics sheet material having a central perforated zone which is lined with a panel of microporous plastics sheet material which is a good bacterial filter and permits passage of oxygen and carbon dioxide, said sheet being folded over with opposite edges seamed together and said zone located in one wall of the bag.

4,063,384
METHOD OF AND APPARATUS FOR WASHING SOD STRIPS, AND METHOD OF SODDING WITH WASHED SOD STRIPS
Benedict O. Warren, Palos Park, and Maurice Rosener, Lockport, both of Ill., assignors to Warren Turf Nursery, Inc., Palos Park, Ill.
Filed Mar. 25, 1976, Ser. No. 670,540
Int. Cl.² A01B *45/04*; **A01G** *1/00*
U.S. Cl. 47—58 **9 Claims**

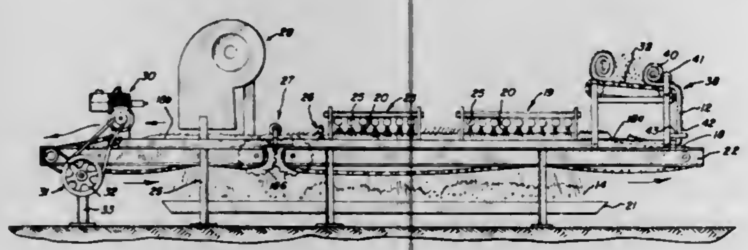

1. A method of washing lengths of grass sod having its root structure embedded in a thickness of soil comprising: positioning a length of sod upon a conveyor belt; advancing the conveyor belt and the length of sod past a station provided with a plurality of jets each for emitting a water spray; and spraying the length of sod with water to remove substantially all of the soil from the length of sod to provide a mat of grass leaves held together by its root structure.

4,063,385
METHOD OF PREPARING ZOYSIA SOD FOR PACKAGING AND SHIPMENT
Herbert L. Friedberg, Baltimore, Md., assignor to The Shelburne Company, Baltimore, Md.
Filed Oct. 14, 1976, Ser. No. 732,610
Int. Cl.² A01B *79/00*
U.S. Cl. 47—58 **4 Claims**

1. A method of treating sod prior to usage thereof by a consumer comprising forming approximately rectangular sections of harvested sod, removing excess moisture from the harvested sod, removing excess soil from the sod sections following the removal of excess moisture to reduce the weight and bulk of the sod sections, and scoring the sod sections on the

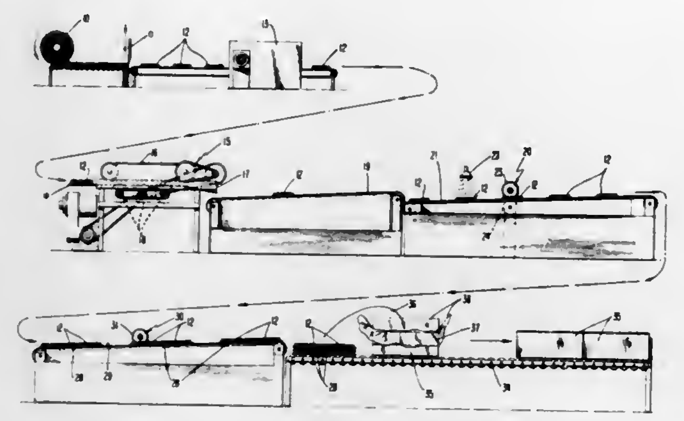

soil sides thereof in two directions to form on each sod section a multiplicity of attached readily separable sod plugs.

4,063,386
RESTORATION OF DRILLING MUD-PITS
Bernard Tramier, Pau, France, assignor to Societe Nationale Elf Aquitaine (Prod.), Paris, France
Filed Dec. 23, 1976, Ser. No. 753,701
Claims priority, application France, Dec. 30, 1975, 75.40070
Int. Cl.² E02D *3/14*
U.S. Cl. 47—58 **14 Claims**

1. Method for the restoration of drilling mud-pits comprising the covering of the floc in a mud-pit with a dry material capable of absorbing water from said floc, and covering said material with earth.

4,063,387
HANGING PLANTER POT SPEAKER ENCLOSURE
Thomas R. Mitchell, 6549 Magnolia Ave., Riverside, Calif. 92506
Filed Dec. 27, 1976, Ser. No. 754,596
Int. Cl.² A01G *9/02*
U.S. Cl. 47—67 **7 Claims**

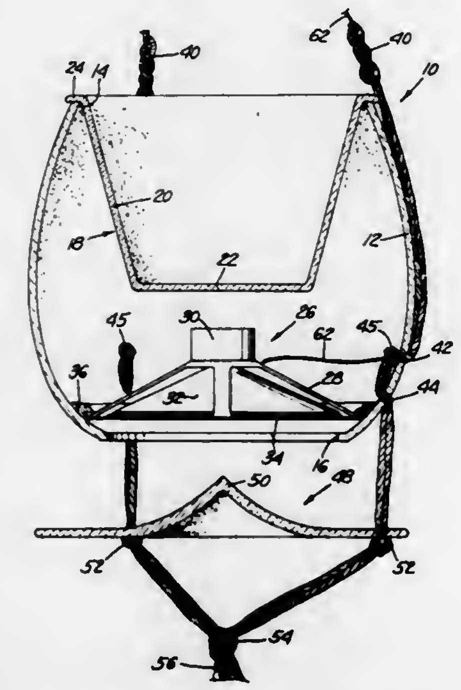

1. A planter pot speaker enclosure comprising:
a hollow housing enclosed on all sides and having openings at the top and bottom thereof;
a planter pot supported by said housing and extending down into the interior thereof through said top opening, said planter pot engaging said housing to form a tight seal therewith so that the planter pot forms a closure for the top opening;
a speaker mounted within said housing below said planter pot, said speaker facing downwardly so that sound radiating from the speaker is projected downwardly through said bottom openings; and
a horizontal diffuser mounted below said bottom enclosure to deflect the sound horizontally outward in all directions.

4,063,388
SLIDING DOOR
Benjamin F. Little, Oklahoma City, Okla., assignor to Roto-Swing, Inc., Oklahoma City, Okla.
Filed Nov. 11, 1976, Ser. No. 741,157
Int. Cl.² E05F *11/12*
U.S. Cl. 49—363 **4 Claims**

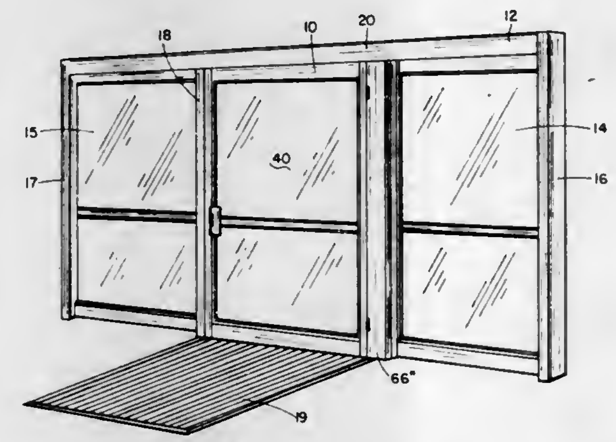

1. A sliding door for a doorway comprising a door frame, an upper horizontal housing extending across the top of the door frame, a rear stationary panel mounted within the door frame to one side of a door opening in the door frame, means for mounting said sliding door for horizontal sliding movement from a closed position over said door opening to an open position in front of said stationary panel, a vertical side of said sliding door abutting over a vertical side of said stationary panel, a vertical track on said vertical side of said sliding door between said sliding door and said stationary panel, a vertical pivot arm pivotally mounted adjacent its upper end in said upper housing and in substantial alignment with said vertical side of said sliding door when said sliding door is in its closed position, a guide roller at the lower end of said vertical arm and received within said vertical track, and means mounted within said upper housing for pivoting said vertical arm to move said sliding door slidably from its closed position over said door opening to its open position in front of said stationary panel.

4,063,389
SECURITY SLIDING DOOR SYSTEM
Erich O. Leder, 2032 S. 60th St., Omaha, Nebr. 68106
Filed Apr. 7, 1976, Ser. No. 674,542
Int. Cl.² E06B *3/42*
U.S. Cl. 49—370 **8 Claims**

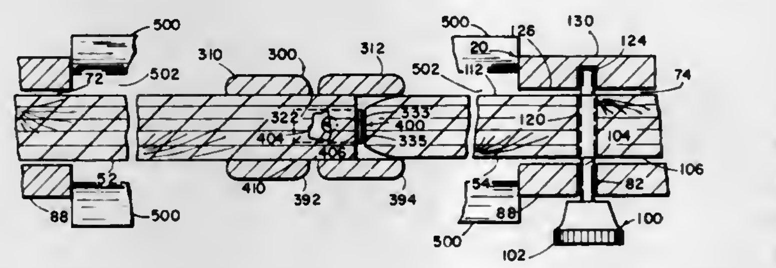

1. A security sliding door system comprising a door frame having a doorway, a first sliding door mounted in said door frame, said door frame having a vertically extending first door storage recess in one side thereof and aligned with said first door, means mounting said first door slidably in said door frame whereby said first door can slide from a storage position in which it is at least mostly in said first storage recess to a doorway closing position for closing a part of said doorway, said door frame having a first door locking opening extending from an inner side of said door frame to said first door storage recess, a security pin, said first door having a first door security pin receiving opening entering from its inner side, said first door security pin receiving opening being disposed in registry with said first door locking opening at times when said first door is in a certain closing position in said doorway, and a security pin in said first door locking opening and also in said security pin opening of said door whereby said first door is locked into said closing position, a second sliding door in said door frame, said system having a duplicate of all parts above mentioned in similar operational positions with respect to said second door and correlating said second door with said door frame for storage and locking, said second door sliding toward and away from said first door and when closed said doors substantially abutting each other, said doors sliding in substantially the same plane, a stop means disposed in a position so as to limit movement of said doors in door closing directions so that when said doors are against said stop means said first door security pin receiving opening is in registry with said first door frame locking opening so that said security pin can be easily inserted at least through part of said door frame and into said first door, and means attaching said stop means to said door frame.

4,063,390
METHOD AND A DEVICE FOR MACHINING PARTS AND ESPECIALLY OPTICAL LENSES BY MEANS OF A MODEL
Alain Chevalier, 37, Rue Corot, Saint Michel sur Orge, France
Filed June 3, 1976, Ser. No. 692,520
Claims priority, application France, June 6, 1975, 75.17671
Int. Cl.² B24B *13/00, 1/00*
U.S. Cl. 51—101 LG **11 Claims**

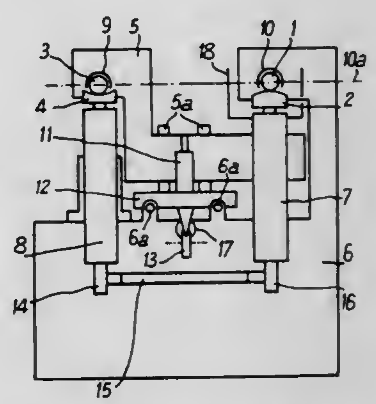

3. Device for machining workpieces, such as optical lenses, comprising a stationary base, a table displaceably mounted on said base for moement relative to said base, a body mounted on said table for movement in a plane perpendicular to the plane of movement of said table, a first support for a model having a surface of revolution to be used in shaping a surface of a workpiece, a second support for the workpiece to be machined, a feeler for placement in contact with the surface of the model to be traced; a third support for said feeler, a tool for machining the surface of said workpiece, a fourth support for said tool, a first spindle for rotating said first support for the model, a second spindle for rotating said second support for the workpiece to be machined, said first and fourth supports fixed to one of said base and said body, said second and third supports fixed to the other one of said base and said body, means for moving said table, means for moving said body, and means for rotating said first and second spindles in synchronism.

4,063,391
CEILING SYSTEM
Henry A. Balinski, Hoffman Estates, and Robert C. Grupe, Jr., Algonquin, both of Ill., assignors to United States Gypsum Company, Chicago, Ill.
Filed Jan. 17, 1977, Ser. No. 759,934
Int. Cl.² E04B *5/52*
U.S. Cl. 52—1 **30 Claims**

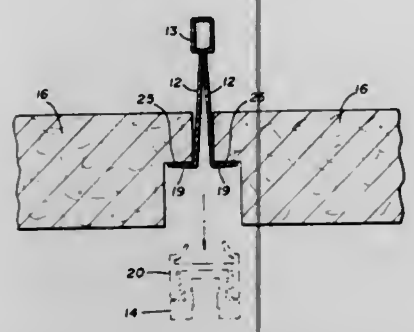

1. A support runner for use in a suspended ceiling system of the type wherein the ceiling has an exposed flange for decorative purposes, said support runner comprising: a decorative trim member having a decorative lower surface and an engageable upper surface; a spline member having engageable upper and lower surfaces engaging the decorative trim member at the lower engagement surface and engaging an inverted-T runner at the upper engageable surface and extending substantially along the full length of the trim, said spline comprising a material which loses its structural integrity at a temperature of from about 200° to about 450° Fahrenheit thereby allowing the decorative trim member to drop away from the support runner and allowing the support runner to increase its supportability of the ceiling; and, an inverted-T runner supportingly and movably engaged within the engageable upper surface of the spline and extending along the spline a distance sufficiently less than the length of the spline to prevent heat distortion of the inverted-T runner; whereby when the ceiling system is exposed to heat the inverted-T runner continues to hold the ceiling even though the spline loses structural integrity due to heat and the decorative trim disengages from the spline.

4,063,392
TELESCOPING SEATING SYSTEM WITH AUTOMATICALLY FOLDING CHAIRS
Arthur Louis Van Ryn; William Rudolph Van Loo, both of Grand Rapids, Mich., and David William Raymond, Champaign, Ill., assignors to American Seating Company, Grand Rapids, Mich.
Filed Feb. 11, 1977, Ser. No. 767,755
Int. Cl.² E04H *3/12*
U.S. Cl. 52—9 **12 Claims**

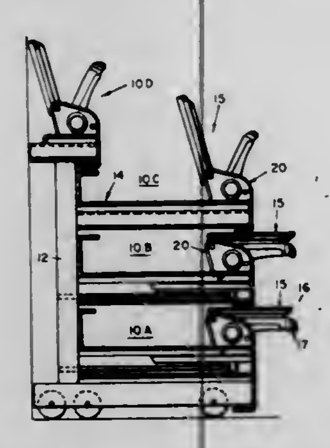

1. In combination with a telescoping seating system including a plurality of rows, each row including a deck, said rows being movable between an extended use position in which the decks are in tiered relation and a retracted storage position in which the decks are in superposed relation, a plurality of chairs each comprising a seat and a back means for pivotally mounting said back to said deck whereby said back may be moved between a raised use position and a lowered storage position; releasable latch means for latching said back when it is in the use position; and actuator means responsive to the retraction of one row relative to an adjacent row for releasing said latch means in said one row, thereby permitting the chair backs in said one row to be moved to the storage position.

4,063,393
PANEL ASSEMBLY STRUCTURE AND PROCEDURE FOR ASSEMBLING SAME
Andrew J. Toti, 311 W. River Road, Modesto, Calif. 95351
Filed May 10, 1973, Ser. No. 358,950
Int. Cl.² E04B *1/32, 2/32, 2/72;* **E04D** *3/362*
U.S. Cl. 52—245 **24 Claims**

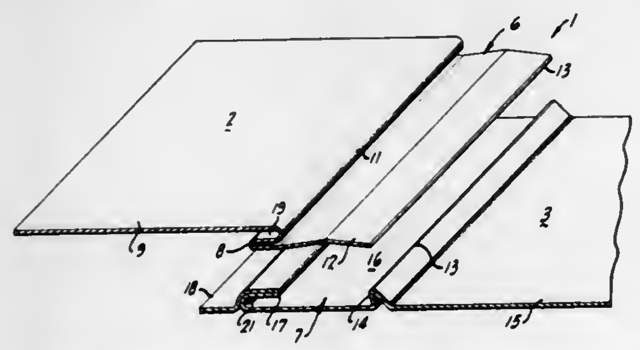

1. A panel assembly comprising first and second performed panel members and an intermediate connecting member interposed between said panel members and securely interconnecting the same without utilizing separate fasteners to effect and maintain such interconnection and without permanently deforming any of said members during such interconnection: each of said first and second panel members comprising a fully preformed marginal portion which is defined by a reversely directed preformed integral hook section extending transversely thereof, and a generally flat preformed deformable tongue section projecting from said hook section and terminating in an edge portion to be wedged in direct non-slidable contact with an abutment shoulder of said connecting member; said connecting member comprising a fully preformed elongated channel member defined by a base portion, a pair of opposed inwardly facing and reversely directed preformed hook portions extending along said base portion at opposite margins thereof, and a generally rigid and unyielding preformed abutment shoulder projecting from said base portion intermediate said opposed hook portions; said hook portion of each of said first and second panel members being securely interfitted and engaged in direct nonslidable locking contact respectively with a hook portion of said connecting member with said tongue section of each panel member overlying and contacting at least part of said base portion of said connecting member with said edge portion of each panel member wedged in direct non-slidable locking contact against such abutment shoulder of said connecting member; interconnection of said panel members with said connecting member being effected by hooking said hook portion of each said panel member beneath a hook portion of said connecting member and thereafter depressing each said tongue section of each said panel member into direct wedging contact with said abutment shoulder of said connecting member to thereby urge said hook portions of said panel members into said non-slidable locking contact with associated hook portions of said connecting member without altering thereby the preformed configurations of said marginal portions of said panel members or of said connecting member or deforming or otherwise distorting said abutment shoulder.

4,063,394
SPHERICAL STORAGE TANK FOR GASES AND LIQUIDS, SUPPORTING BASE THEREFOR
Peter Feuerlein, Pratteln, Switzerland, assignor to BUSS AG, Basel, Switzerland
Filed Oct. 21, 1976, Ser. No. 734,414
Claims priority, application Switzerland, Nov. 19, 1975, 14973/75; Apr. 21, 1976, 4955/76
Int. Cl.² E02D *27/34*
U.S. Cl. 52—294 **7 Claims**

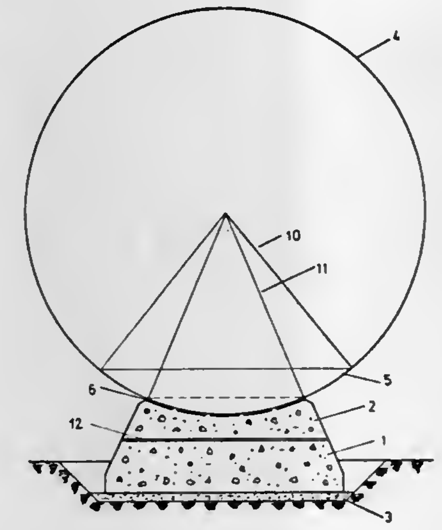

1. In combination, a spherical tank for gases and liquids, a rigid load-bearing concrete foundation for said tank below the region of the vertical axis of said spherical tank; said mounting having elastomeric properties and being securely bonded to the underside of said spherical tank and to said foundation; said mounting consisting essentially of a plurality of slabs made of polychloroprene rubber covering the whole upper area of the foundation in a spaced array leaving only narrow gaps between the individual slabs; the slabs being thin in relation to their size; and said gaps between slabs filled with a high viscosity soft plastic-sealant made of polysulfide elastomer material.

4,063,395
TWIN MEMBRANE, SELF SEALING, MECHANICALLY FASTENED INSULATED ROOF DECK SYSTEM
Sherman A. Stewart, Rancho Palos Verdes, Calif.; Estel R. Snyder, La Grange, Ill., and David L. Ruff, Harbor City, Calif., assignors to Grefco, Inc., Bala Cynwyd, Pa.
Filed May 10, 1974, Ser. No. 468,885
Int. Cl.² E04D *1/28, 1/36*
U.S. Cl. 52—309.5 **5 Claims**

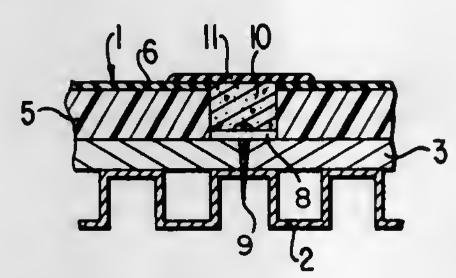

1. In combination with a roof deck, a roof structure comprising:

a. a plurality of abutting rectangular panels, each panel comprising:
   1. a rigid rectangular fire resistant substrate having an upper and lower surface and having fastened on the upper surface and generally centered thereon;
   2. a substantially rigid core of insulation comprising a synthetic organic polymer closed cell foam, having an upper surface;
   3. said core being of similar geometrical shape but somewhat smaller in size than the substrate, so that the edge of the substrate extends beyond the edge of the core and forms an overlap;
b. said rectangular panel being capable of being bound on all of its sides by abutting like panels and wherein said panels are so bounded in the roof structure except at the perimeters thereof;
c. the abutting edges of the substrates and the adjacent core edges forming channels or slots;
d. washer means for fastening the panels to the roof deck extending over two adjacent substrate overlaps and attachment means passing through the washer means into the roof deck to fasten the roof structure thereto;
e. said channels being filled with joint sealer means comprising polyurethane foam which joins the adjacent panels together; and
f. tough, weather resistant membrane means covering the roof structure and bonded thereto, said membrane means being bonded to the upper surface of each of the panel cores and the joint sealers.

4,063,396
OMNI-PANEL STRUCTURE
Julian J. Attaway, Tucker, Ga., assignor to MM Systems Corporation, Tucker, Ga.
Filed Sept. 20, 1976, Ser. No. 724,573
Int. Cl.² E04B *2/72*
U.S. Cl. 52—489 **10 Claims**

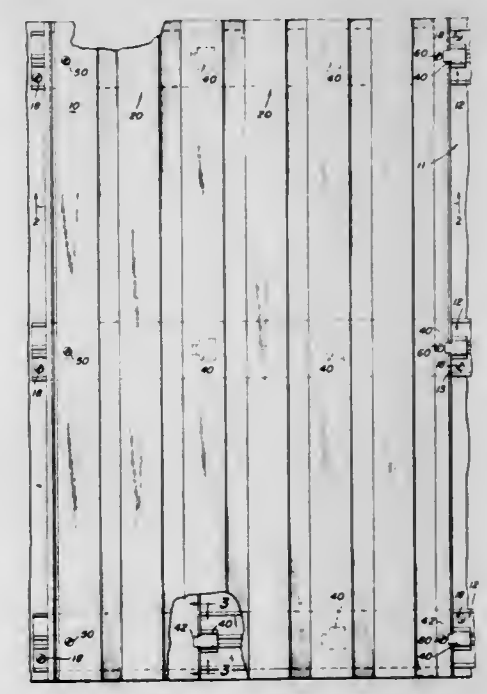

1. In an omni-panel structure, the combination which includes, a plurality of laterally interspaced longitudinally substantially parallel stringer means each rearwardly in the omni-panel structure defining longitudinal laterally oppositely entrant recesses and including longitudinal laterally oppositely projecting means having surface areas on the rear thereof bordering said recesses; a plurality of courses of substantially parallel sheathing means forwardly of said stringer means in the omni-panel structure and resting against said stringer means and longitudinally leading in said courses transversely of said stringer means, said sheathing means having tongue and groove means engaging said sheathing means in said course with said sheathing means in any next said course, and said sheathing means in said course adjacent to said sheathing means in any next said course having lateral end means including longitudinal lip means laterally projecting forward in the omni-panel structure and said lateral end means covered by said sheathing means in said next course, and a plurality of snap-on resilient clip means each including bight, leg and tongue means which comprises, bight means forwardly in the omni-panel structure from said longitudinal laterally oppositely projecting means of a related one of said stringer means, and beyond a related one of said sheathing means longitudinally of said related one of said stringer means, leg means

interconnected by said bight means and having oppositely reaching end portions and longitudinal outer lateral edge structure, said oppositely reaching end portions of said leg means engaging rearwardly in the omni-panel structure said rear surface areas of said longitudinal laterally oppositely projecting means of said related one of said stringer means, and clip tongue means extending from said bight means and beyond said longitudinal outer lateral edge structure of said leg means to apply differently directed vectors of thrust to said lip means of said related one of said sheathing means and thus press said related one of said sheathing means toward the rear in the omni-panel structure against said related one of said stringer means and keep said lateral end means of said related one of said sheathing means against said longitudinal outer lateral edge structure of said leg means, having said oppositely reaching end portions of said leg means resiliently engage rearwardly in the omni-panel structure said rear surface areas of said longitudinal laterally oppositely projecting means of said related one of said stringer means.

4,063,397

BAR SPACER FOR REINFORCED CONCRETE

James Follows, Surrey, Canada, assignor to Vanguard Plastics Ltd., Canada

Filed Nov. 8, 1976, Ser. No. 739,643

Int. Cl.² E04C *5/16*

U.S. Cl. 52—684 **2 Claims**

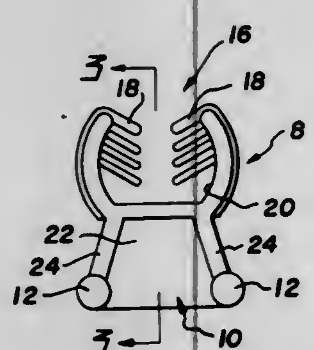

1. A bar spacer for concrete reinforcing bars comprising:
a foot portion to contact a form for concrete;
a bar gripping portion with an interior surface having two opposing groups of spaced teeth adapted to grip a reinforcing bar for concrete;
each tooth being out of alignment with each adjacent tooth in the same group, whereby each tooth can bend to a position past the adjacent tooth in the same group so that each spacer can grip and locate bars of varying diameter.

4,063,398

MULTI-PANEL ENVELOPE FORM AND METHOD OF PRODUCING SAME

Harold W. Huffman, 2100 John Gray Road, Fairfield, Ohio 45014

Division of Ser. No. 469,672, May 13, 1974, Pat. No. 3,955,750. This application Sept. 12, 1975, Ser. No. 612,709

Int. Cl.² B65B *11/06*

U.S. Cl. 53—31 **15 Claims**

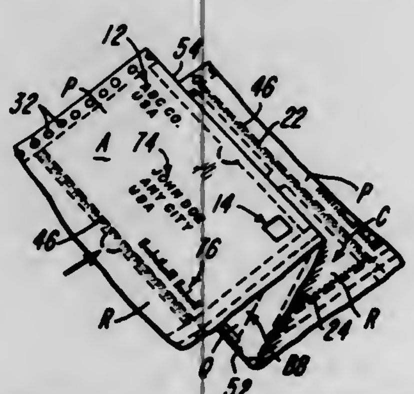

1. A method of producing a series of end-to-end interconnected stuffed mailing envelope assemblies from a plurality of end-to-end connected multi-panel forms, comprising the steps of:
a. continuously advancing and transversely subdividing an endless web into a plurality of interconnected forms each of which comprises a pair of coplanar, end-adjacent, envelope-defining panels separated by an end-connected intermediate panel integral and coplanar therewith;
b. longitudinally subdividing said web for defining an elongate tear strip along the side edges of the forms, wherein the inner or panel-adjacent edge of the tear strip defines the outer side edge of the panels of a finished, stuffed, envelope assembly, and wherein the outer side edges of the intermediate panels are disposed inwardly of the outer side edges of the envelope-defining panels;
c. applying adhesive to those side and end portions of the envelope-defining and intermediate panels which are disposed in contacting, bonded relationship in a finished, stuffed envelope assembly;
d. zig-zag folding the panels of each form for disposing the upper surface of the intermediate panel in overlying relationship with the upper surface of one of said envelope-defining panels, and with the lower surface of the intermediate panel in overlying relationship with the lower surface of the other of said envelope-defining panels, and wherein the adjoining envelope-defining panels of successive interconnected, zig-zag folded forms are disposed in coplanar relationship;
e. removing said elongate tear strips for disposing the adjacent faces of the side edges of the envelope-defining panels in abutting relationship beyond the side edges of the intermediate panel; and
f. permanently bonding the side edges of the envelope-defining panels, and the end edges of the intermediate panel to corresponding end edges of the envelope-defining panels thereby completing a series of end-edge interconnected stuffed mailing envelope assemblies.

4,063,399

COIN WRAPPING DEVICE IN WRAPPING APPARATUS

Shiro Nakai, and Minoru Nakamura, both of Himeji, Japan, assignors to Glory Kogyo Kabushiki Kaisha, Japan

Filed Oct. 27, 1976, Ser. No. 736,184

Claims priority, application Japan, Oct. 27, 1975, 50-146260[U]

Int. Cl.² B65B *57/20, 11/04*

U.S. Cl. 53—59 R **2 Claims**

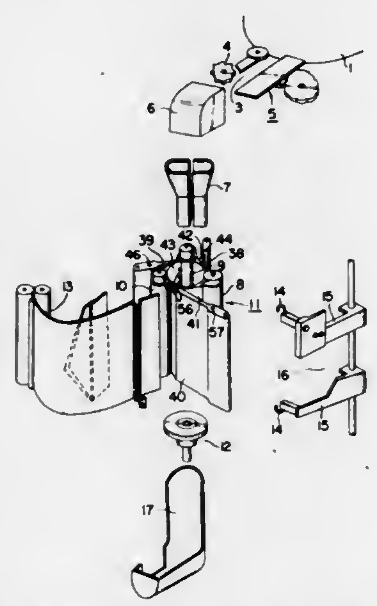

1. In a coin wrapping apparatus having a coin counting device for counting a predetermined number of coins; a coin stacking and wrapping device provided below said coin counting device for directly receiving therein the counted coins and stacking them, the coin stacking and wrapping device comprising a plurality of vertically positioned wrapping rolls positioned around a central space among said rolls, means for moving said wrapping rolls toward and away from the center of said space, means for rotatably driving said rolls, sheet feeding means for feeding a wrapping sheet during said rotation of said rolls and when a coin-stack is present in said space for wrapping the sheet around the coin-stack, a fold-crimping device for fold-crimping the lateral projecting edges of the wrapped sheet during the wrapping operation, and a main guide member and an auxiliary guide member between each pair of the adjacent wrapping rolls, said plurality of wrapping rolls and guide members defining a substantially continuous inside cylindrical wall around said space for stacking therein one by one the counted coins dropped directly from the counting device, and said guide members being connected to said means for moving said wrapping rolls for movement toward and away from the center of the space in synchronism with the movements of the wrapping rolls in accordance with outer diameter of the coins to be processed.

4,063,400

CONTINUOUS FILM SEALING MACHINE

Eugenio Millevoi, Fort Lee, N.J., assignor to Weldotron Corporation, Piscataway, N.J.

Filed Oct. 22, 1976, Ser. No. 735,035

Int. Cl.² B65B *51/30*

U.S. Cl. 53—180 R **7 Claims**

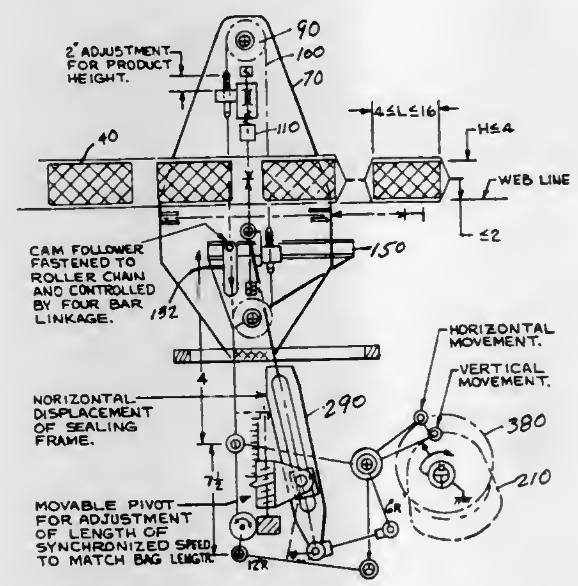

5. Film-sealing apparatus comprising
means providing a horizontal path along which a tube containing a series of products progresses to a sealing station for sealing each of said products in its own tube,
the apparatus at said sealing station comprising
first and second sealing bars disposed horizontally transverse to said path,
sprocket means and chain means secured to said first and second sealing bars whereby movement of said sprocket and chain means in one direction drives said sealing bars together, and movement of said sprocket and chain means in the opposite direction drives said sealing bars apart, said sealing bars being driven vertically up and down, and
means rigidly coupling said chain means to a vertically reciprocable member which is coupled itself through a linkage to a cam whereby said vertically reciprocable member can be driven up and down and said sealing bars can be driven up and down.

4,063,401

BAGGING MACHINE

David M. Higgins, 1748 N. Drury Lane, Arlington Heights, Ill. 60004

Division of Ser. No. 508,876, Sept. 24, 1974, Pat. No. 3,944,045, which is a division of Ser. No. 393,588, Aug. 31, 1973, abandoned. This application Feb. 17, 1976, Ser. No. 658,743

The portion of the term of this patent subsequent to Aug. 5, 1992, has been disclaimed.

Int. Cl.² B65B *43/08*

U.S. Cl. 53—183 **9 Claims**

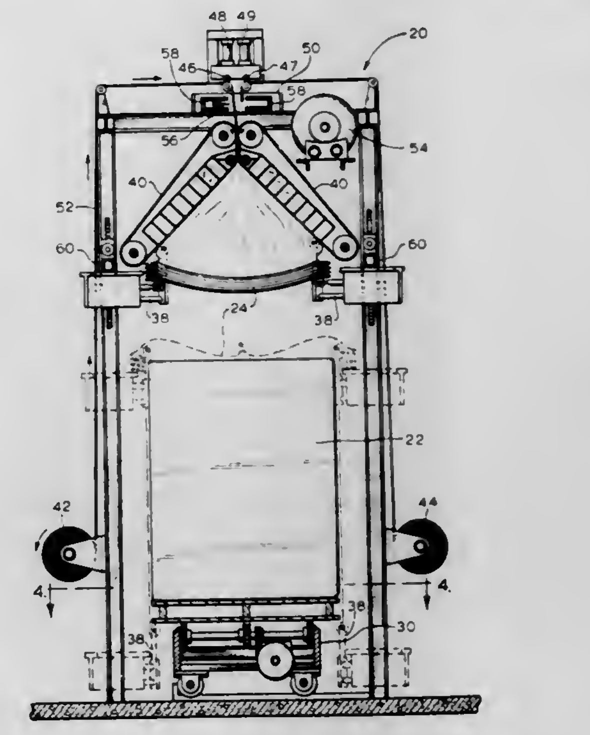

1. A bagging machine for covering a load with a bag formed from a tubing of stock material comprising:
means for feeding the tubing to a work area for receiving the tubing;
means for gripping the tubing, and spreading the tubing to an at least partially open position;
gathering arm means for collecting in collapsed condition the tubing which has been spread to an open position, said gathering arm means including means for positively feeding the tubing onto said gathering arm means;
means for retracting the gathering arm means outward to spread the collected bag on the gathering arm means to a size sufficient to encompass the load;
means for severing the tubing and forming the bag therefrom, the bag being collected on said gathering arm means; and
means for providing relative movement between said gathering arm means and the load in order to feed the bag from said gathering arm means so as to cover the load.

4,063,402

APPARATUS FOR STUFFING THE LIMBS OF SMALL DOLLS

Dean Becker Washburn, Lawndale, and Dale Paul Cleveland, El Segundo, both of Calif., assignors to Mattel, Inc., Hawthorne, Calif.

Filed Sept. 29, 1976, Ser. No. 727,302

Int. Cl.² B65B *39/06, 67/00*

U.S. Cl. 53—258 **4 Claims**

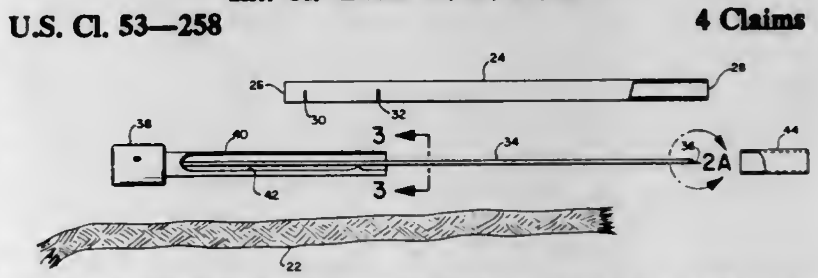

1. In an apparatus for stuffing sleeve-like cloth forms with successive increments from a continuous strand of cord-like stuffing material, the combination comprising:

a first elongate tube having one end thereof configured for receiving the form over said one end;

a second tube being configured for telescopic engagement with the other end of said elongate tube, said second tube having a cutaway portion defining a trough for receiving and retaining the strand of cord-like stuffing material therein;

a push rod having a length at least equal to the length of said first tube plus the length of one of said increments of stuffing material; and

means for securing one end of said push rod in an axial direction within said second tube, the free end of said push rod being provided with a unidirectional barb for engaging and inserting the cord-like stuffing material into said first tube with said first and second tubes in telescopic engagement with said barb being moved toward said one end of said first tube, said push rod stuffing and removing said form from said one end of said first tube whereby to permit successive increments of said cord-like stuffing material to be inserted into said first tube during successive manipulations of the tubes while in telescopic relationship.

4,063,403
CARTON CLOSING AND SEALING APPARATUS
Frank David Bergstein, Cincinnati; Robert W. Nerenberg, Middletown, and James H. Shiverdecker, Dayton, all of Ohio, assignors to Bergstein Packaging Trust, Middletown, Ohio
Filed Aug. 23, 1976, Ser. No. 716,551
Int. Cl.² B65B *51/10*
U.S. Cl. 53—379 16 Claims

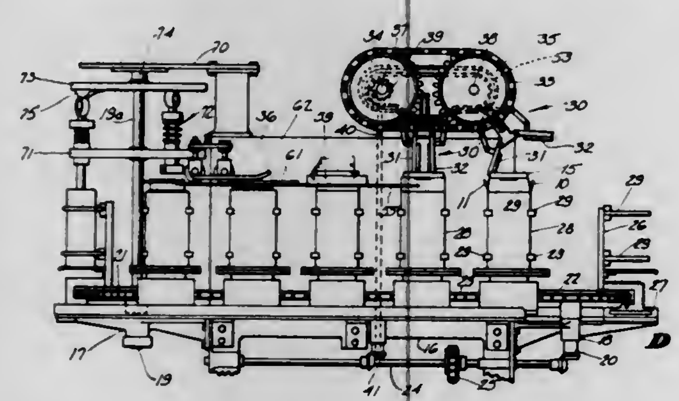

1. Apparatus for closing cartons having enclosing body walls and an end closure comprising at least an opposing pair of end closure flaps having sealing flaps hingedly connected to their outermost side edges, means for advancing the cartons in a path of travel with their said end closure flaps initially projecting upwardly in prolongation of the body walls to which they are hingedly connected and with the said end closure flaps extending lengthwise with respect to the path of travel of the cartons, means for displacing the sealing flaps inwardly to juxtapose them in face-to-face relation, including means for maintaining the sealing flaps in juxtaposed relation as they are advanced, a tucking station, a tucking head at said tucking station, means mounting said tucking head above the path of travel of the cartons, said tucking head mounting a tucking bar having an elongated channel in its undersurface adapted, when the tucking bar is displaced downwardly, to engage the juxtaposed sealing flaps and deflect them downwardly within the confines of the carton bodies, means for displacing said tucking bar downwardly in timed relation to the movement of the cartons through said tucking station, and displaceable guide arms at the trailing end of the means for maintaining the sealing flaps in juxtaposed relation, said guide arms being positioned to guide the juxtaposed sealing flaps beneath said tucking head in alignment with said tucking bar, said guide arms being displaceable in the event the sealing flaps are flexed by the tucking bar as an incident of the engagement of the sealing flaps by the channel in the sealing bar.

4,063,404
BRIDLE BIT SUGAR CUBE HOLDER
John D. Taylor, Rte. 3 Box 16, Perryton, Tex. 79070
Filed May 17, 1976, Ser. No. 687,418
Int. Cl.² B68B *1/06*
U.S. Cl. 54—8 1 Claim

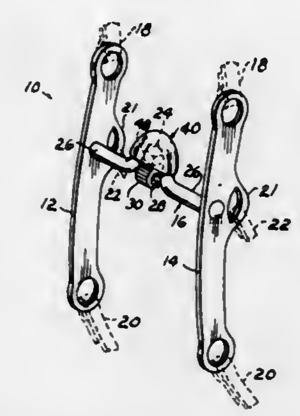

1. In combination with a bridle bit having a rigid mouthpiece characterized by axially aligned normally horizontal opposing end portions and an inverted substantially U-shaped bend medially its length having a forward surface and a rearward surface and having a roller journalled for rotation about the axis of a pin horizontally bridging the spacing between the mouthpiece opposing end portions, the improvement comprising:

a hood overlying and secured to the inverted U-shaped bend of said mouthpiece and having a depending wall edge lying in a plane tangent with the upper limit of said roller for defining a downwardly open article receiving chamber within the U-shaped bend above said roller,

the wall of said hood having an opening diametrically dimensioned for the passage of a cube of sugar, or the like, and communicating with the chamber; and,

a plug for opening and closing the hood wall opening.

4,063,405
SHOCK-ISOLATED ELECTRIC ACTUATOR FOR MOVING A HARVESTING MACHINE HEADER
Irwin D. McIlwain, Lancaster, Pa., assignor to Sperry Rand Corporation, New Holland, Pa.
Filed Aug. 18, 1976, Ser. No. 715,275
Int. Cl.² A01D *67/00*
U.S. Cl. 56—208 5 Claims

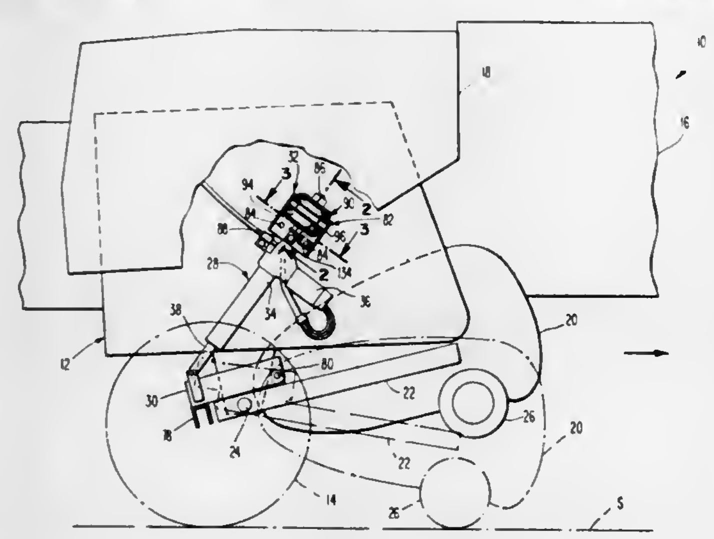

1. In a crop harvesting machine of the type having a frame and a header mounted to said frame for pivotal movement relative thereto about a pivot axis between a field operating position and a transport position, the improvement comprising:

a. an electric rotary activator having a longitudinal axis and a first end and a second end, said first end of said actuator connect to said header at a point remote from said pivot axis;

b. a support bracket having a wall portion rigidly mounted

to said frame and a plate-like holder portion extending substantially perpendicularly from said wall portion, said holder portion having an opening therethrough with an axis substantially parallel to the longitudinal axis of said electric actuator;

c. a resilient rubber-like member affixed to said holder portion of said support bracket and including segments on both sides thereof with an intermediate segment extending through said opening in said holder portion, said resilient member further including an opening therethrough coaxial with the opening through said holder portion;

d. connector means operably connected to said resilient member and said second end of said actuator;

e. stop means affixed to said bracket and extending away therefrom to operably engage said connector means and prevent rotation thereof beyond a predetermined angle; and

f. electrical control means connected to said actuator for selective operation thereof.

4,063,406
HARVESTING MACHINE
Charles G. Burton, Lewiston, N.Y., assignor to Chisholm-Ryder Company, Inc., Niagara Falls, N.Y.
Filed Feb. 8, 1973, Ser. No. 330,639
Int. Cl.² A01D *46/00*
U.S. Cl. 56—330 20 Claims

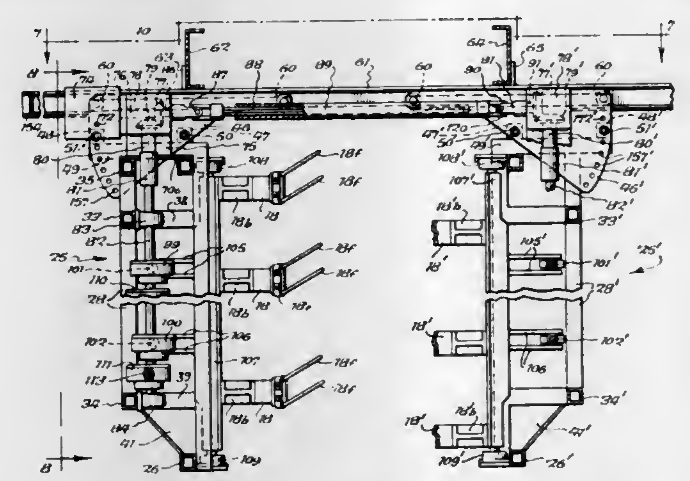

1. A grape harvester for harvesting grapes from a row of grapevines comprising frame means for movement alongside said row of grapevines, first and second spaced harvesting arm means adpated to be located in straddling relationship to said row of grapevines, first and second module means mounting said first and second harvesting arm means, respectively, and mounting means mounting said first and second module means on said frame means for selective coupled free reciprocating rectilinear movement transversely of said row of grapevines or for selective independent free rectilinear reciprocating movement transversely of said row of grapevines.

4,063,407
RAKE
George Tansey, Midgehill Farm, Midgehill, Mossley, Lancashire, England
Filed July 6, 1976, Ser. No. 703,122
Int. Cl.² A01D *7/00*
U.S. Cl. 56—400.14 3 Claims

1. A rake structure comprising:

an elongate handle;

a tine carrier extending transversely of and secured to one end of said handle, said tine carrier being in the form of an angle-section length of metal, having a first flange and a second flange, said first flange serving for securement of said carrier to said handle;

a clamp bar extending parallel to a free edge portion of said second flange and sandwiching a plurality of tines between it and said second flange;

a portion of said second flange at each end of said tine carrier being extended beyond said first flange and bent forwardly to lie generally parallel to said handle on the side of the tine carrier remote from said handle; and

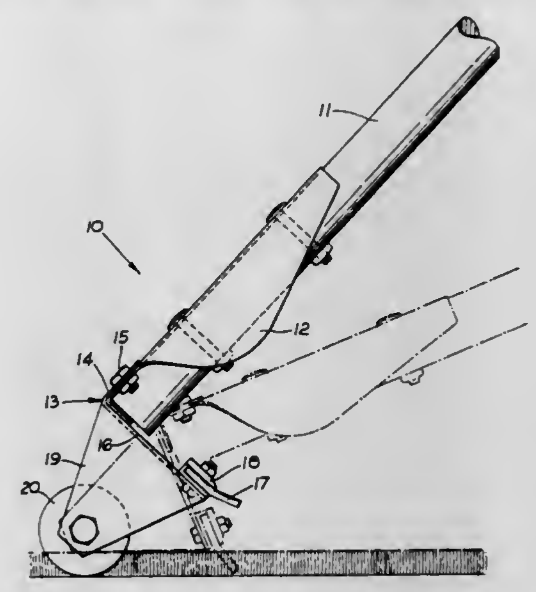

a wheel mounted on each of said bent forward portions for rotation about an axis parallel to said tine carrier.

4,063,408
DIRECT DOUBLE TWIST CABLER
Shu Inohara; Yasuyuki Nagamune, both of Osakashi, and Bunjiro Tanigaki, Sakaishi, all of Japan, assignors to Kabushiki Kaisha Kajitekkosho, Osaka, Japan
Filed June 30, 1976, Ser. No. 701,239
Int. Cl.² D01H *1/10, 7/86*
U.S. Cl. 57—58.54 10 Claims

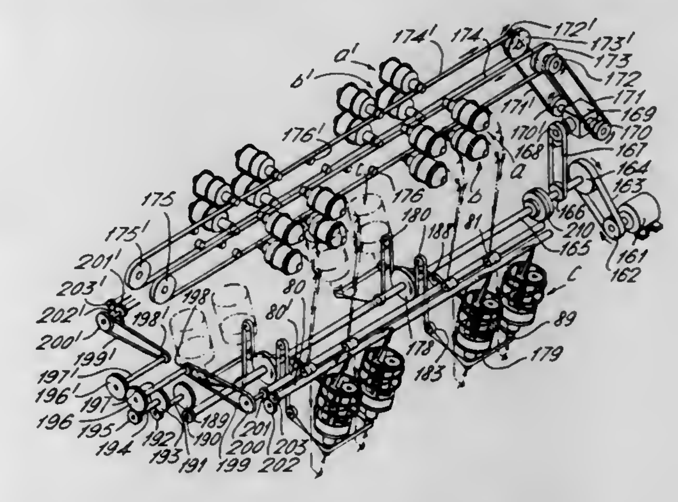

1. A direct double twist cabler comprising a mounting frame having at least two two-for-one spindles for plying and one two-for-one spindle for cabling for each two plying spindles, said plying spindles having their axes substantially horizontally disposed in the upper section of the equipment, said cabling spindle having its axis outwardly slanting in the range of 5° to 15° from the vertical, the lowest part of said cabling spindle being lower than the lowest part of said plying spindles, a tension adjusting means, a yarn breakage detecting means, means for braking said plying spindles upon detection of a yarn break, and adjustable magnetic means for winding up cable in said cabling spindle.

4,063,409
CUSTOM WATCH
John A. Bayliss, Sunnyvale, Calif., assignor to Intel Corporation, Santa Clara, Calif.
Filed Jan. 5, 1976, Ser. No. 646,591
Int. Cl.² G04C *3/00*
U.S. Cl. 58—23 R 31 Claims

1. A timekeeping circuit is an integrated circuit watch, said watch having a master oscillator for generation of a timekeep-

ing signal and having output means for generating an output signal, comprising:

a control means for selectively generating an address and control signal, said control means being coupled to said master oscillator and responsive at least in part to said timekeeping signal;

address decoder means for decoding at least part of said address and control signal, said address decoder means being coupled to said control means;

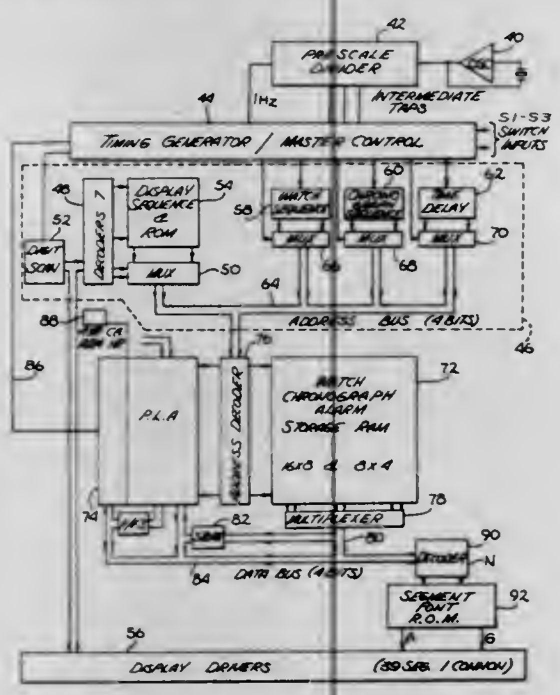

a RAM being coupled to said address decoder means, said RAM being responsive to said address and control signal to provide a selected binary word;

PLA being coupled to said address decoder means, said PLA generating an output binary word in response to said address and control signal and to said selected binary word; and

memory control means being coupled to said RAM, said PLA, and said output means, for selectively coupling said selected binary word said RAM, said PLA and said output means.

4,063,410
DIGITAL WATCH INCLUDING A SIGNAL TRANSMITTER
Gregory J. Welling, 529 N. 33rd St., Omaha, Nebr. 68131
Filed Mar. 1, 1976, Ser. No. 662,590
Int. Cl.² G04C *21/34;* **G04B** *23/12;* **A61B** *5/02, 5/04*
U.S. Cl. 58—38 R **3 Claims**

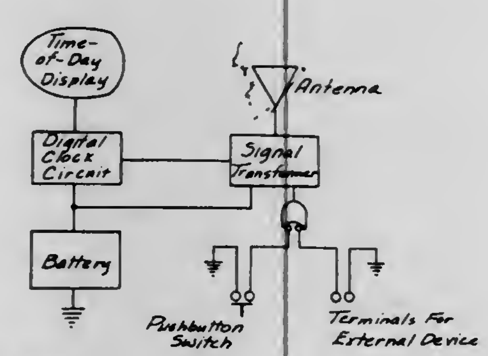

1. In combination,

a digital wristwatch including a housing containing a digital circuit for controlling a digital display and a battery for operating said digital circuit,

a signal transmitter in said housing and being operatively electrically connected to the digital circuit and battery,

said digital circuit providing a clock signal which is the carrier signal transmitted by said signal transmitter,

a switch means on said wristwatch for energizing said signal transmitter at times,

a pair of terminals on said wristwatch for energizing said signal transmitter from an external device at times, and

said signal transmitter transmitting a coded pulse and frequency signal whereby a remote receiver may distinguish between a plurality of different signal transmitters in a given location.

4,063,411
STEPPING MECHANISM
Kurt Mürrle, Pforzheim, Germany, assignor to Pforzheimer Uhren-Rohwerke Rudolf Wehner, Pforzheim, Germany
Filed Oct. 15, 1976, Ser. No. 732,871
Claims priority, application Germany, Nov. 6, 1975, 2549816
Int. Cl.² G04B *19/24*
U.S. Cl. 58—125 B **5 Claims**

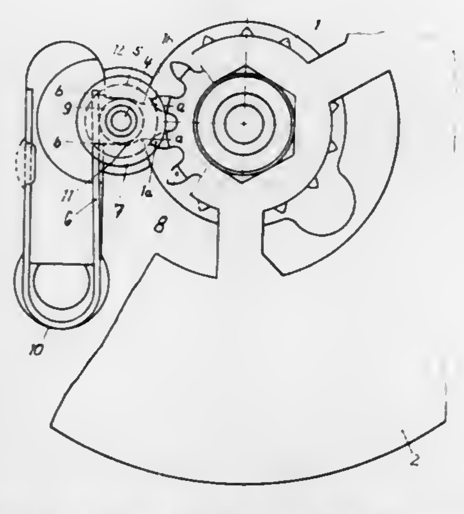

1. In a stepping mechanism, in combination,

a stepping gear rotatably mounted with freedom of axial movement and formed with an axially facing shoulder and with teeth and tooth spaces defined by said teeth,

a rotatably mounted pawl roller having first and second peripheral rings, and

a spring urging said pawl roller against said stepping gear,

said first peripheral ring being adapted to enter one of said tooth spaces to oppose a rotation of said stepping gear,

said second peripheral ring radially overlapping said shoulder to limit the freedom of axial movement of said stepping gear.

4,063,412
PULLER TOOL
Daniel A. Bruzek, Medford, Minn., assignor to Owatonna Tool Company, Owatonna, Minn.
Filed Nov. 4, 1976, Ser. No. 739,007
Int. Cl.² B21L *21/00*
U.S. Cl. 59—7 **4 Claims**

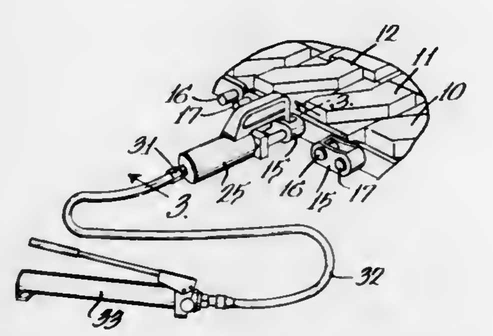

1. A portable puller for a track end connector which is movably mounted on a pair of track pad shafts comprising, a base having a fluid cylinder therein which opens to an end of the base, a ram movably mounted in said cylinder for extension beyond said end of the base, means connected to said base for engaging inside an end connector at a distance from said base for holding an end connector fixed relative to said base, including a generally L-shaped arm offset from the base and extending outwardly from the base with an end aligned with the axis of said cylinder, and means connected to said ram for engaging said track pad shafts and simultaneously pushing on both said track pad shafts as the ram is extended to pull the end connector off said track pad shafts by relative movement between the ram and the base comprising a pair of pusher members positioned one to either side of said cylinder axis and engageable one with each of said track pad shafts.

4,063,413
CHAIN COUPLING DEVICE AND METHOD OF MANUFACTURE THEREOF
Reuben Paul Benton, North Tonawanda, and Kenneth D. Schreyer, Clarence, both of N.Y., assignors to Columbus McKinnon Corporation, Tonawanda, N.Y.
Filed Mar. 25, 1977, Ser. No. 781,293
Int. Cl.² F16G *15/04;* **B21L** *11/08, 13/00*
U.S. Cl. 59—35 CP **10 Claims**

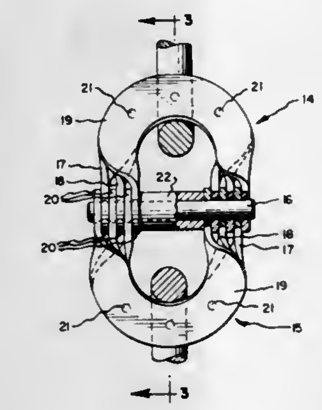

1. An improved chain coupling link device comprising;

a pair of sub-assembly units each being of generally U-shaped planform configurations hingedly interconnected by means of a hinge pin, wherein each of said sub-assembly units comprises a laminate of two or more strap-like members;

said members each being blanked from flat sheet or plate stock material into generally U-shaped planforms to include a flat intermediate bow-shaped portion subtended by at least generally parallel leg portions, the terminal ends of said leg portions being apertured and 90 degree twisted relative to said intermediate bowed portion and mounting therethrough said hinge pin; said intermediate bowed portions being of their original blanked out planar configurations;

pluralities of said members of each of said units being nested together in laminar relation;

and means structurally integrating the relatively laminated intermediate bow-shaped portions of said members.

4,063,414
METHOD AND APPARATUS FOR PRODUCING HIGH ENERGY GASEOUS FLUID SUBSTANTIALLY NOT CONTAINING PHYSIOLOGICALLY HARMFUL SUBSTANCES
Naoyasu Sata, No. 80, Yamate-cho, Ashiya, Hyogo; Kensaku Imaichi, No. 31-50-405, Gotenyama-cho, 2-chome, Takarazuka, Hyogo, and Tatsuzo Hirose, No. 9-18, Fukatani-cho, Nishinomiya, Hyogo, all of Japan
Filed Apr. 5, 1976, Ser. No. 673,690
Claims priority, application Japan, Oct. 15, 1975, 50-123261
Int. Cl.² F02C *7/00*
U.S. Cl. 60—39.05 **16 Claims**

1. A method for producing high temperature, high pressure and high energy gaseous fluid for use as the actuator fluid in a heat engine, comprising the steps of:

providing a closed pressure-tight container which defines therein a closed space insulated from ambient temperature, said space including inlet and discharge zones adjacent the opposite ends of said chamber, and a hollow tubular guide positioned within said space in spaced relationship from the walls of said chamber and extending between the inlet and discharge zones;

introducing a nongaseous flowable hydrocarbon fuel and pure oxygen into said inlet zone and combusting them together to form a flame and resulting in a high temperature conbustion gas which is formed substantially of steam and carbon dioxide;

directing the high temperature combustion gas from the inlet zone through the tubular guide toward the discharge zone so that the high temperature combustion gas is confined to flow substantially solely within the tubular guide as it flows from the inlet zone to the discharge zone;

introducing substantially air-free water into said chamber at a location which is positioned externally of said tubular guide and spaced a substantial distance from said inlet zone;

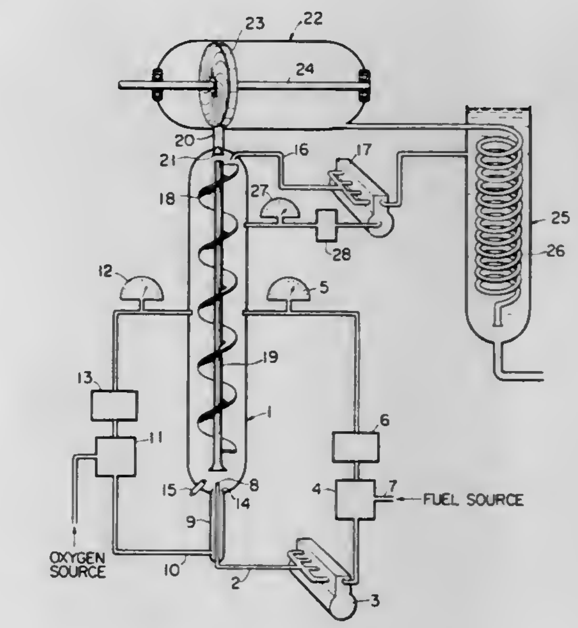

causing the water introduced at said location to flow generally toward said inlet zone while maintaining said water separated from the combustion gas which is flowing away from said inlet zone due to said tubular guide being positioned therebetween;

effecting heat transfer from the combustion gas flowing within said tubular guide through said tubular guide to the water which is flowing exteriorly thereof to cause generation of steam within said closed space in surrounding relationship to said tubular guide;

mixing the combustion gas and the steam to form a high temperature, high pressure mixed gaseous fluid at said discharge zone; and

discharging the high temperature, high pressure gaseous fluid from said discharge zone through a pressure-controlled valve to permit utilization of this gaseous fluid as the motive power energy source of a heat engine.

4,063,415
APPARATUS FOR STAGED COMBUSTION IN AIR AUGMENTED ROCKETS
Richard G. Rhoades, Huntsville, Ala., assignor to The United States of America as represented by the Secretary of the Army, Washington, D.C.
Filed June 30, 1972, Ser. No. 267,736
Int. Cl.² F02K *3/10*
U.S. Cl. 60—261 **2 Claims**

1. Apparatus for providing staged addition of air to the ramburner of an air augmented rocket comprising:

a. a ramburner including a combustion region, said ramburner having a forward portion provided with air inlets and an aft portion provided with a nozzle;

b. an air staging device disposed intermediate said air inlets and said nozzle, said staging device disposed for metering air flow to said combustion chamber for enhancing the

ignition combustion and performance of said rocket, said air staging device being a tapered cylindrical member having apertures disposed in radial and longitudinal spaced relation in the surface thereof for directing a portion of said air to said combustion chamber, said staging device further having a coating of ablative material

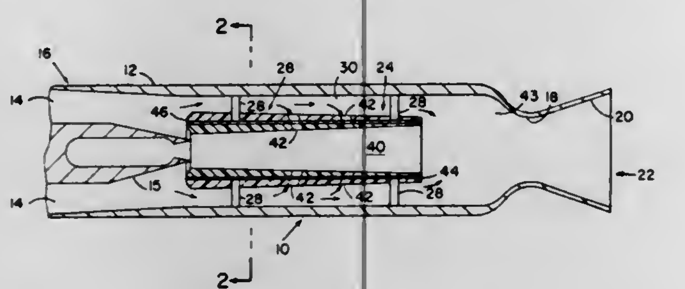

thereon for providing additional thrust producing fuel to the ramburner as well as providing thermal protection; and,

c. A mixing chamber disposed intermediate said nozzle and said cylindrical member to receive air passing around said staging device for mixing with the combustion products issued from said combustion region.

4,063,416
STEAM GENERATOR
Jack M. Cooper, Box 913, Okmulgee, Okla. 74447
Filed Dec. 3, 1975, Ser. No. 637,239
Int. Cl.² F03G 7/00
U.S. Cl. 60—641 **5 Claims**

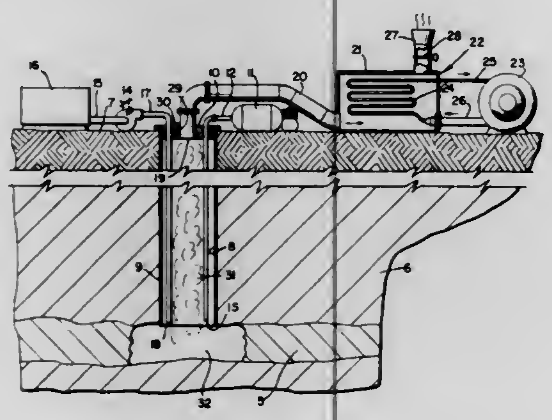

1. An apparatus for utilizing fossile fuels still in the ground as an energy source, comprising a bore hole extending from the earth's surface to underground fossile fuel, a cap closing the upper end of said hole, a first conduit leading from above ground through said cap to adjacent the fuel, said cap having a bore through which an igniter can be utilized for igniting the fuel, a closure for sealing said cap bore after the fuel is ignited, means supplying air from above the earth's surface through said first conduit to the burning fuel, a second conduit opening into the bore hole through said cap to receive heat from the burning fuel, an electric generator, and a heat exchanger connected to said second conduit and to the generator for utilizing the heat to drive the generator.

4,063,417
POWER GENERATING SYSTEM EMPLOYING GEOTHERMALLY HEATED FLUID
J. Rodger Shields, Pittsburgh, Pa., assignor to Carrier Corporation, Syracuse, N.Y.
Filed Feb. 4, 1976, Ser. No. 655,178
Int. Cl.² F03G 7/00
U.S. Cl. 60—641 **12 Claims**

1. A method of generating electrical power comprising the steps of:

providing a constant supply of geothermally heated fluid including water at substantially its saturation temperature as a substantial portion thereof;

supplying said geothermally heated fluid through a nozzle to the first stage of a hydraulic turbine having an output shaft coupled to the wheel of said turbine, with a portion of said fluid flashing to a vapor phase as a result of the fluid passing through said nozzle, and with the water constituent of said fluid being directed by said nozzle against the wheel to cause the wheel to rotate;

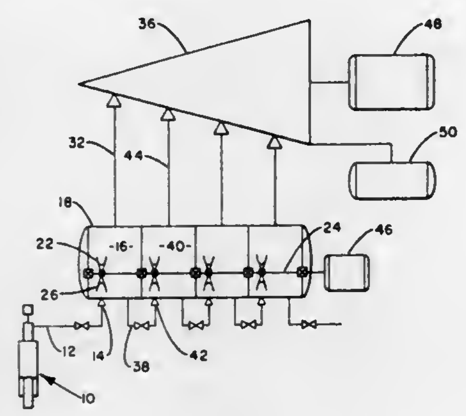

coupling the output shaft of said hydraulic turbine to a first generator for generating electricity;

supplying the flashed vapor from said hydraulic turbine to the first stage of a vapor driven turbine having an output shaft coupled to the wheel of said vapor driven turbine, with said wheel turning as a result of the passage of said vapor therethrough; and

coupling the output shaft of said vapor driven turbine to a second generator for generating electricity.

4,063,418
POWER PRODUCING SYSTEM EMPLOYING GEOTHERMALLY HEATED FLUID
J. Rodger Shields, Pittsburgh, Pa., assignor to Carrier Corporation, Syracuse, N.Y.
Filed Feb. 4, 1976, Ser. No. 655,179
Int. Cl.² F03G 7/00
U.S. Cl. 60—641 **10 Claims**

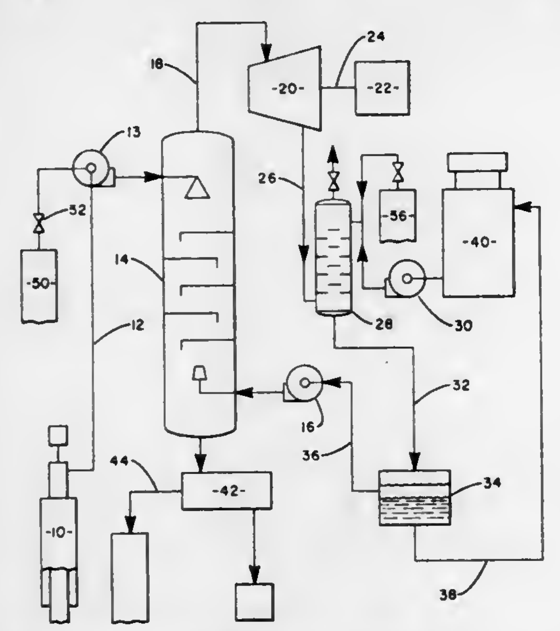

1. A power generating system comprising:

a source of geothermally heated fluid having a quantity of inorganic salts dissolved therein;

a first direct contact heat exchanger connected to said source of geothermally heated fluid;

means to supply a working fluid of a type substantially insoluble in a fluid containing dissolved inorganic salts to said direct contact heat exchanger, said working fluid being vaporized as a result of moving into direct contact heat transfer relation with said geothermally heated fluid;

expansion means connected to said direct contact heat exchanger, with said working fluid being delivered to the inlet of said expansion means whereby the fluid is expanded therethrough;

a second direct contact heat exchanger connected to the outlet of said expansion means to receive the working fluid exhausted therefrom; and

means to supply a relatively cold heat transfer medium comprising a liquid salt solution to said second direct contact heat exchanger to condense said working fluid, with said condensed working fluid being returned to said first direct contact heat exchanger for reuse in said cycle.

4,063,419
ENERGY PRODUCTION FROM SOLAR PONDS
Donald E. Garrett, 505 W. Ninth St., Claremont, Calif. 91711
Filed Nov. 12, 1976, Ser. No. 741,334
Int. Cl.² F03G 7/02
U.S. Cl. 60—641 **31 Claims**

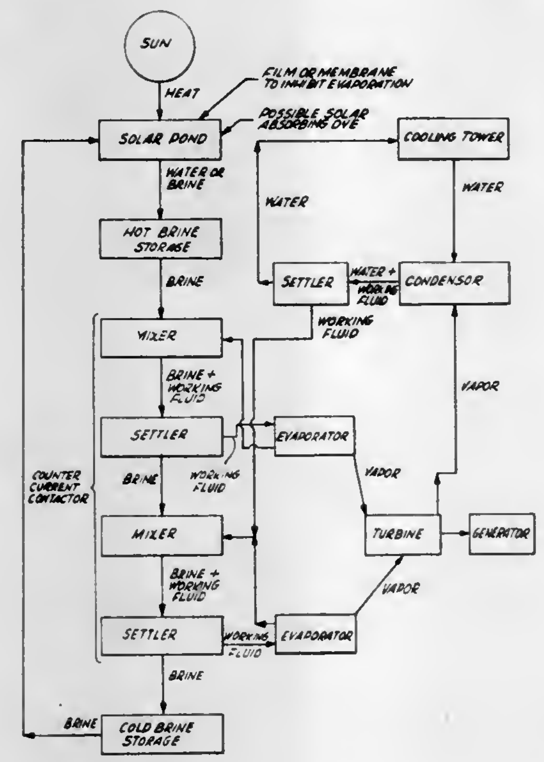

1. A method for collecting and converting solar energy to work, the method comprising the steps of:

a. providing a liquid in at least one solar pond for absorbing available solar energy, maintaining the liquid in the pond for a sufficient residence period to heat said liquid to an average temperature of from about 100° F. to about 250° F.;

b. effecting a contact of the heated pond liquid obtained from step (a) in a prescribed sequence with multiple immiscible working fluids to effect a heat transfer from said pond liquid to said working fluids, said working fluids each having a progressively lower boiling point temperature;

c. separating the working fluids obtained from step (b) from said pond liquid;

d. vaporizing said working fluids and utilizing the vapors resulting therefrom to drive a mechanical working device to produce work.

4,063,420
REPETITIVE CLOSED RANKINE CYCLE WORKING FLUID AS MOTIVE POWER FOR PRIME MOVER
Jerome J. Sloyan, Trenton, N.J., assignor to George W. Bishop, Princeton, N.J.
Filed Aug. 18, 1975, Ser. No. 605,647
Int. Cl.² F01K 25/08
U.S. Cl. 60—671 **5 Claims**

1. A Rankine Cycle power plant system comprising a boiler, an engine, a feed line from said boiler to supply working fluid therefrom to said engine, and a return line from said engine to

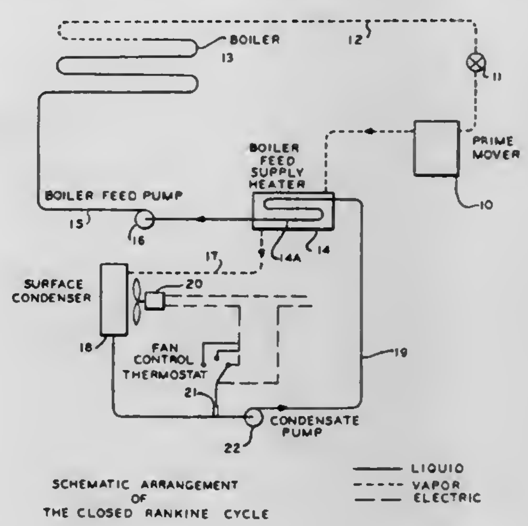

said boiler to recirculate the working fluid through said system, wherein said working fluid is propionic acid.

4,063,421
GROUTING SYSTEM AND ARRANGEMENT FOR OFFSHORE STRUCTURE
Malcolm G. Coone, and Erwin E. Hoffman, both of Houston, Tex., assignors to Lynes, Inc., Houston, Tex.
Filed Aug. 4, 1975, Ser. No. 603,029
Int. Cl.² E02D 5/14
U.S. Cl. 61—102 **11 Claims**

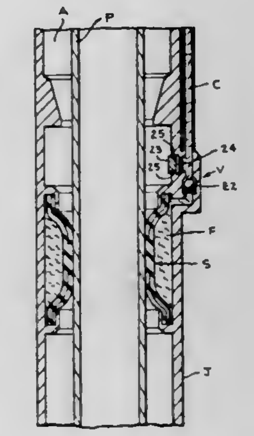

1. A method of grouting an offshore structure positioned on the seabed and having at least one tubular jacket in the water and a piling in the jacket having an outside diameter smaller than the inside diameter of the jacket to thereby form a space between the jacket and piling, said method comprising the steps of:

a. positioning inflatable seal means adjacent the lower end of the jacket;

b. securing conduit means to communicate selectively with the seal means and space;

c. injecting inflating fluid through the conduit means to inflate the seal means inwardly to sealingly engage the piling; and

d. introducing grouting material through the same conduit means and into the space.

4,063,422
CONNECTOR STRUCTURE
Gaston Marier, P.O. Box 549, Princeville, Quebec, Canada
Continuation of Ser. No. 558,811, March 17, 1975, abandoned. This application May 7, 1976, Ser. No. 684,362
Claims priority, application Brazil, Nov. 20, 1974, 9710
Int. Cl.² E02D 5/34
U.S. Cl. 61—53 **6 Claims**

1. A connector structure for interconnecting elongated pile

sections comprising a first connector element for securement to the end of a pile section, a second connector element for securement to a further pile section, one of said connectors having a plate for attachment to one of said sections, an annular flange located on and extending above a surface of said plate to define a connecting inner side wall extending parallel to the longitudinal axis of said pile sections, a flat top surface on said flange, an inner recess area defined by said flange and having a flat bottom wall, a groove mid-way about said inner connecting side wall, the other of said connectors having a further plate for attachment to said other one of said sections; a projection portion extending above a surface of said further plate and having a flat top surface, said projection portion being of the same thickness as the height of said annular flange and defining a connecting outer side wall also extending parallel to the longitudinal axis of said pile sections, a groove mid-way about said outer side wall, said projection portion being dimensioned

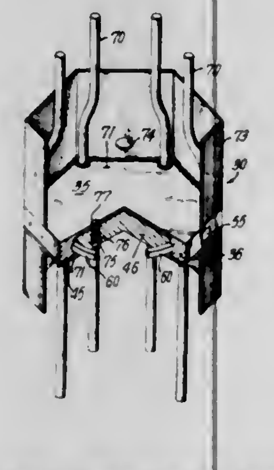

for close fit within said inner recess area with said grooves juxtaposed and said flat top surface of said projection portion in abutment with said recess area bottom wall, said juxtaposed grooves defining an endless locking channel of square cross-section, at least one access passage extending through said flange to join said locking channel tangentially to permit passage and insertion of a locking rod at least in a substantial portion of said locking channel, said rod having a square cross-section for close fit into said locking channel whereby it can be fitted in said channel through said access passage to lock the connectors from separation, said locking rod and said channel having opposed parallel top and bottom surfaces disposed transversely to the longitudinal axis of the pile and parallel side surfaces extending parallel to said longitudinal axis to provide axial load transfer between said groove top and bottom surfaces when a load is applied axially of said pile sections and acting between said opposed parallel faces of said rod in said axial direction.

4,063,423

METHOD OF MAKING BUILT-IN-PLACE REINFORCED CONCRETE PILES

Konstantin Stepanovich Gurkov, ulitsa Derzhavina, 19, kv. 13; Nikolai Grigorievich Nazarov, ulitsa Gogolya, 3, kv. 10; Evgeny Nikolaevich Cherednikov, ulitsa Lenina, 32, kv. 6; Vladimir Dmitrievich Plavskikh, ulitsa Kamenskaya, 84v, kv. 33; Leonid Georgievich Rozhkov, ulitsa Krylova, 41, kv. 40; Khaim Berkovich Tkach, ulitsa Gogolya, 17, kv. 49; Vladimir Alexandrovich Grigoraschenko, ulitsa Voskhod, 7, kv. 67; Alexandr Dmitrievich Kostylev, ulitsa Derzhavina, 19, kv. 44; Vasily Georgievich Davydov, ulitsa Saltykova-Schedrina, 9, kv. 28, and Valentin Alexeevich Zuev, ulitsa Sovetskaya, 53, kv. 50, all of Novosibirsk, U.S.S.R.

Filed May 15, 1975, Ser. No. 577,746

Int. Cl.^{2} E02D *5/34, 5/48*

U.S. Cl. 61—53.62 **3 Claims**

1. A method of making reinforced concrete piles, comprising forming a borehole in the ground; filling the borehole with a concrete mix; introducing a tool into the filled borehole to compact the mix and form an axial cavity; deforming a tubular reinforcing framing in the radial direction; placing the deformed framing in the axial cavity along its entire length; filling the cavity with a concrete mix and successively axially introducing into and withdrawing from the filled cavity an expand-

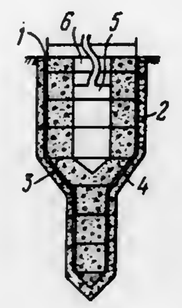

ing tool of a size to compact the mix and radially expand the borehole to a predetermined diameter while radially expanding the reinforcing framing.

4,063,424

DEVICE FOR CONSTRUCTING A FOUNDATION IN SOFT SOIL FORMATIONS

Atsushi Takagi, Kanagawa; Hiroyuki Kuroiwa, Tokyo; Masao Miyaguchi, Tokyo; Tateo Kawamura, Tokyo, and Yoshihiro Ishikawa, Kanagawa, all of Japan, assignors to Takenaka Komuten Co., Ltd., Osaka, Japan

Filed Sept. 7, 1976, Ser. No. 720,561

Claims priority, application Japan, Sept. 10, 1975, 50-110282

Int. Cl.^{2} E02D *5/36, 5/46*

U.S. Cl. 61—63 **6 Claims**

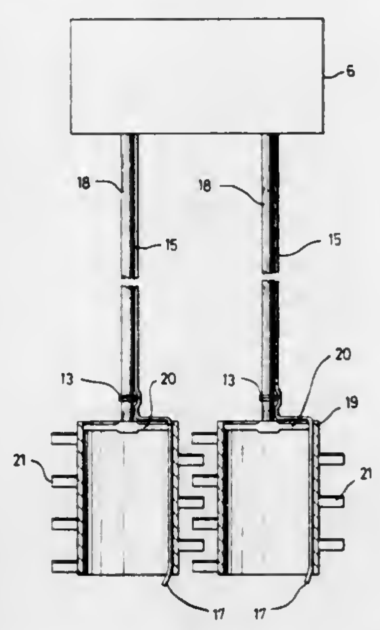

1. A device for constructing a tubular pile foundation in soft soil formations comprising:
a machine box in which drive means is accepted;
said drive means including a motor and at least one gear reducer;
driving shaft means connected to said gear reducer;
barrel means disposed at the lower end of said driving shaft means;
a plurality of blades for agitating the soil in annular shape arranged on the inner and outer faces of said agitating barrel means;
swivel joint means disposed beneath said machine box;
pipe means adjacent to and parallel with said driving shaft means for delivering chemical hardener, said pipe means being connected to said swivel joint means and extending to the lower end of said barrel means; and
nozzle means formed at the tip end opening of said pipe means for injecting chemical hardener into the soil;
wherein the device is used to construct a tubular pile foundation in the soft soil formations with individual tubular piles or jointed tubular piles each having an annular cross section.

4,063,425

TUNNEL DRIVING APPARATUS

Hans Jütte, Dortmund-Brechten, and Dieter Stuckmann, Selm, both of Germany, assignors to Gewerkschaft Eisenhutte Westfalia, Westfalia, Germany

Filed Dec. 7, 1976, Ser. No. 748,313

Claims priority, application Germany, Dec. 9, 1975, 2555317

Int. Cl.^{2} E01G *3/02*

U.S. Cl. 61—85 **16 Claims**

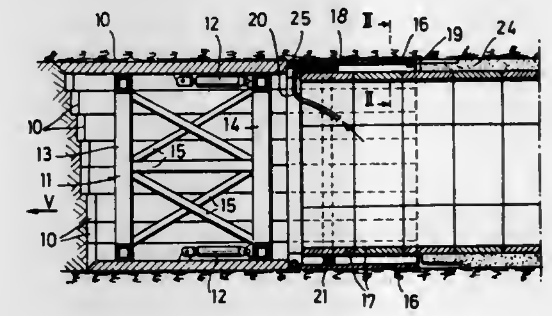

1. A tunnel driving apparatus comprising a shield with a series of elongate drive members arranged side-by-side in parallel relationship, a frame supporting the drive members for individual longitudinal displacement, means for alternately advancing the drive members and the frame, a rear extension forming a tail provided for each drive member, the tails being relatively shiftable in accordance with the tunnel advancement and serving to define a reception zone for lining elements spaced from the tunnel wall and from the inner surfaces of the tails and sealing means for sealing off the space between the inner surfaces of the tails and the lining elements whereby to permit a filling material to be introduced into said space as the tunnel advances to create a permanent tunnel lining.

4,063,426

THREE COLUMN TOWER

Frode Johan Hansen, 19 Elm Lodge, River Gardens, Stevenage Road, London, England

Filed June 11, 1976, Ser. No. 695,170

Claims priority, application United Kingdom, June 11, 1975, 25076/75

Int. Cl.^{2} E02B *17/00*

U.S. Cl. 61—94 **13 Claims**

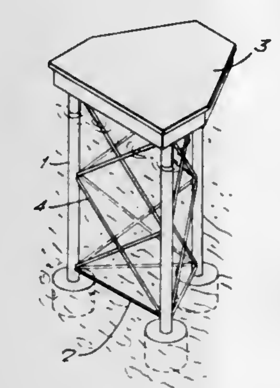

1. A method of constructing a marine structure comprising making three hollow columns, bracing the columns together adjacent their end portions with bracing members at right angles thereto and between their end portions with bracing members diagonally thereto to form a horizontally disposed rigid buoyant structure such that when erected on the sea bed said bracing members at right angles will be horizontal members beyond the critical wave zone with said diagonally extending bracing members situated between said end portions, assembling hollow feet on the columns, floating the structure to the site with the columns substantially horizontal, ballasting one end portion of the columns to upend the structure into a substantially vertical position and to sink the structure onto the sea bed, and excavating the sea bed within the feet to enable the structure to be seated firmly in the upright position at a suitable foundation depth in the sea bed.

4,063,427

SEAL ARRANGEMENT AND FLOW CONTROL MEANS THEREFOR

Erwin E. Hoffman, Houston, Tex., assignor to Lynes, Inc., Houston, Tex.

Filed Aug. 4, 1975, Ser. No. 603,137

Int. Cl.^{2} E02D *5/00*

U.S. Cl. 61—100 **7 Claims**

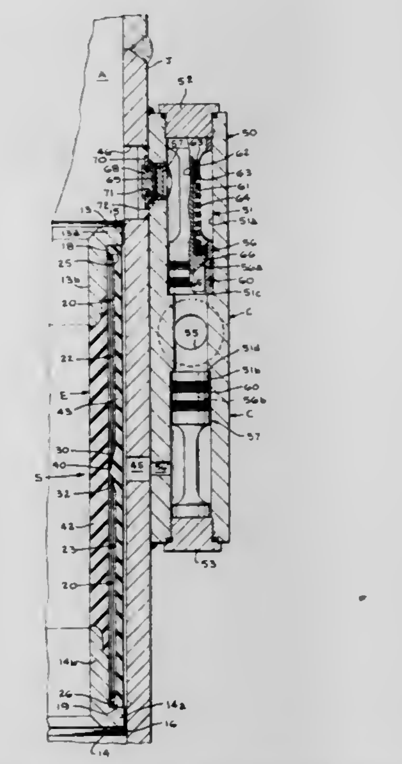

1. An arrangement for grouting an offshore structure positioned on the seabed and having at least one tubular jacket in the water and the piling in the jacket having an outside diameter smaller than the inside diameter of the jacket to thereby form a space between the jacket and piling, said arrangement including:
a. expandable seal means for securing to the jacket;
b. control means for controlling communication to said expandable seal means and for controlling communication to the space, said control means comprising spring loaded check valve means arranged in alligned, opposed relation;
c. said control means including means to trap fluid in said expandable seal means;
d. a housing having a longitudinal bore;
e. first and second spring loaded check valve means mounted in the bore in spaced relation to open in opposite directions, said first spring loaded check valve means being operational in expansion of said expandable seal means and said second spring loaded check valve means being operational to thereafter maintain said seal means in expanded position;
f. said housing having first port means for selective fluid communication between the longitudinal bore between said first and second check valve means and the exterior of said housing; and
g. there being second port means in said housing normally closed off from said first port means by said first spring loaded check valve means, the second port means being communicable with the first port means when the pressure in the longitudinal bore overcomes said first spring loaded check valve means.

4,063,428

METHOD OF DEFLECTING ICE AT UPRIGHT COLUMNS SUBMERGED IN WATER OF STATIONARY OR FLOATING STRUCTURES IN MARINE AREAS IN WHICH THE OCCURENCE OF ICE MAY BE EXPECTED, AND ICE DEFLECTOR ASSEMBLY THEREFOR

Heinrich Waas, Am Stadtwald 50, Bonn-Bad 5300 Godesberg, Germany

Filed Aug. 24, 1976, Ser. No. 717,135

Claims priority, application Germany, Aug. 26, 1975, 2537918; Aug. 12, 1976, 2636334

Int. Cl.² E02B *15/02;* **B63B** *35/12*

U.S. Cl. 61—102 **13 Claims**

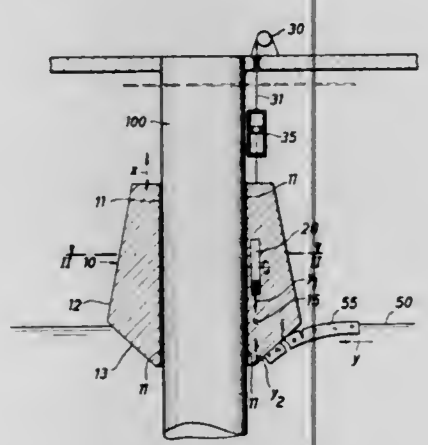

1. A method of deflecting ice from an upright column-like member submerged in water and forming part of a stationary or a floating structure in marine areas in which the occurrence of ice may be expected, comprising supporting a deflector having upwardly and downwardly directed deflecting surfaces about an individual column, adjusting the deflector vertically to locate the deflecting surfaces thereof in the range of the ice around the column-like member, wherein the improvement comprises generating oscillations within the deflector for oscillating the deflector in the upward and downward direction for movement relative to and separate from the column-like member, and elastically suspending the deflector about the column-like member so that the oscillating action of the deflector is not transmitted to the column-like member.

4,063,429

PIPELINE RETARD, SUPPORT AND PROTECTION METHOD

Ernest I. Wilson, 192 S. 1st West, Nephi, Utah 84648

Continuation-in-part of Ser. No. 413,747, Nov. 7, 1973, abandoned. This application July 14, 1975, Ser. No. 595,973

Int. Cl.² B29D *27/04;* **E02D** *31/06;* **F16L** *58/101, 59/00*

U.S. Cl. 61—105 **4 Claims**

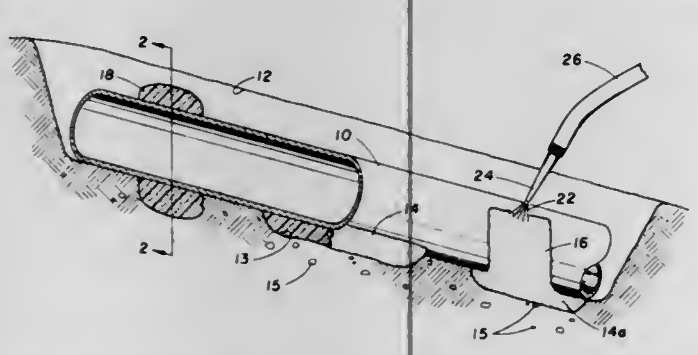

1. A method of inhibiting soil erosion along a pipeline in a trench, the steps of:

selecting a pipeline segment which is characterized by a space between each side of the pipeline and the banks of the trench;

directing the nozzle of a spray apparatus toward one of the spaces and delivering a foam reaction mixture through the spray nozzle to the bottom of the trench immediately adjacent one side of the pipeline segment and filling at least a portion of the space along the selected pipeline segment by creating an accretion of foam between one side of the pipeline segment and one bank of the trench;

removing the spray nozzle to the other side of the pipeline segment essentially diametrally opposite the one side and repeating the directing and delivering steps and filling at least a portion of the space along the pipeline segment by creating an accretion of foam between the other side of the pipeline segment and the other bank of the trench, the accretion of foam on both sides of the pipeline segment forming a retard; and

backfilling the trench around the accretion of foam forming the retard.

4,063,430

LAYING OF SUBMARINE PIPES

Jacques Edouard Lamy, Fontenay aux Roses, France, assignor to C. G. DORIS (Compagnie Generale pour les Developpements Operationnels des Richesses Sous-marines, Paris, France

Filed Mar. 25, 1976, Ser. No. 670,146

Claims priority, application France, Mar. 27, 1975, 75.09631; Jan. 16, 1976, 76.01101; Jan. 16, 1976, 76.01100

Int. Cl.² F16L *1/00*

U.S. Cl. 61—113 **6 Claims**

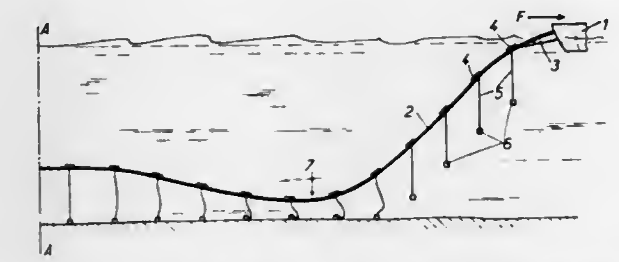

1. In a method of laying a continuous submarine pipeline with a part of the pipeline being already in position along the seabed while another part of the pipeline is abeyant adjacent the sea-surface, said parts of the pipeline being joined respectively to an oblique intermediate pipeline section through connecting bends, the improvement which consists essentially of:

A. fitting a plurality of guide ropes at intervals along said pipeline, said guide ropes having a lengthwise distributed weight of flexible nature and imparting a slightly negative level of overall buoyancy to the pipeline, and

B. sinking the pipeline continuously with the fitted guide ropes to the seabed,

C. whereby the weight imparted by the fractional length of the guide ropes which engages the seabed is cancelled, said pipeline being disposed over the seabed by means of the flexible guide ropes, and

D. whereby said pipeline section intermediate the parts disposed on the seabed and adjacent the sea-surface respectively is automatically regulated at a proper pipeline height over the seabed.

4,063,431

COMPACT COOLING SYSTEM FOR AUTOMOTIVE VEHICLES

Gerhard Dankowski, Rte. 2, Box 59A, Royse City, Tex. 75089

Filed Aug. 11, 1976, Ser. No. 713,352

Int. Cl.² B60H *3/04;* **F01M** *1/00, 5/00;* **F01P** *11/08*

U.S. Cl. 62—239 **8 Claims**

1. A compact cooling system for an automotive vehicle having an engine fan for forcing air along an air path, an air conditioning system for cooling vehicle compartments with a refrigerant, and circulating means for carrying a liquid lubricant and a liquid coolant from the power train of said vehicle, which comprises:

first heat exchange means mounted to said vehicle in said air path and in fluid communication with said circulating means for cooling said lubricant and said coolant;

second heat exchange means mounted forward but spaced apart from said first heat exchange means and in fluid communication with said air conditioning system and said first heat exchange means for condensing said refrigerant and further cooling said lubricant;

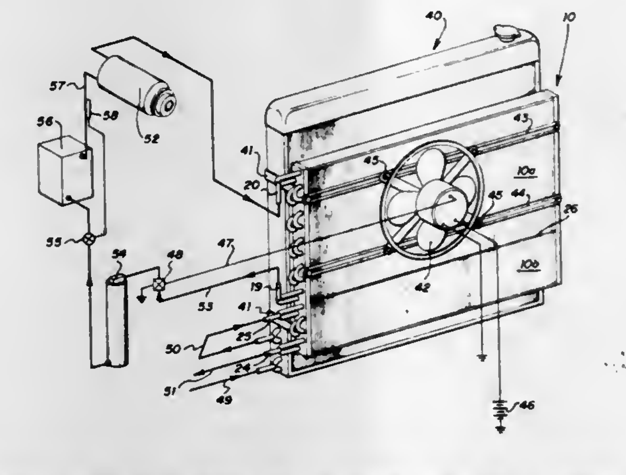

an electrically activated fan mounted on the forward face of said second heat exchange means; and

a pressure switch in electrical communication with said fan and sensitive to refrigerant pressure in said air conditioning system for enabling said fan when said refrigerant pressure exceeds threshold level.

4,063,432

FREEZING AND COLD-STORAGE INSTALLATION

Roland Chaussy, Migennes, and Jean Paoli, Paris, both of France, assignors to Agence Nationale de Valorisation de la Recherche (ANVAR), France

Filed Apr. 29, 1976, Ser. No. 681,407

Claims priority, application France, Apr. 30, 1975, 75.13568; Apr. 14, 1976, 76.10974

Int. Cl.² F25D *17/06*

U.S. Cl. 62—419 **11 Claims**

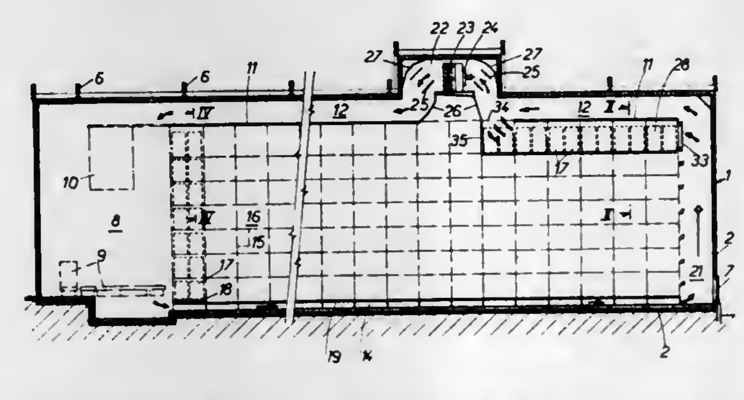

1. A freezing and cold storage installation comprising in combination:

an elongated room, the sides of which are provided with thermal insulation;

a plurality of longitudinal racks extending over a major part of the length of said room between the end portions thereof, said racks each being provided with a series of superimposed horizontal rows of compartments adapted to receive goods to be frozen and stored, the compartments of each said rows communicating in a longitudinal direction with one another and with said end portions of said room, the racks having longitudinal corridors therebetween for enabling goods to be introduced into and removed from said compartments;

a longitudinal duct substantially parallel to said rows and communicating with said end portions of said room;

means in said duct for circulating air from one end portion of said room to the other end portion of said room and for cooling said air;

and means for laterally enclosing a series of adjacent compartments in a row and building therewith a tunnel which communicates with one of said end portions of said room and with a said longitudinal duct, whereby air circulation conditions are created within said tunnel for enabling it to be used as a freezing space.

4,063,433

ELASTIC ROTATIONAL COUPLINGS

Edmond Chanton, Clamart, France, assignor to Societe Generale de Macanique et de Metallurgie, Vanves, France

Filed Feb. 3, 1976, Ser. No. 655,040

Claims priority, application France, Feb. 5, 1975, 75.03592

Int. Cl.² F16D *3/17*

U.S. Cl. 64—11 R **8 Claims**

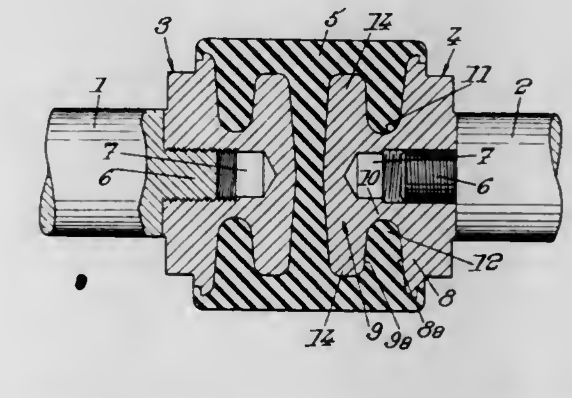

1. An elastic rotational drive coupling comprising: two rigid heads separated from one another by a predetermined distance and adapted to be fixed to two shaft ends to be coupled; and a body of elastic material in which the two rigid heads are at least partially embedded; each of said rigid heads having an axis of rotational symmetry and comprising: a base, means for fixing said base to a rotor, a plate spaced from said base, neck means connecting said plate to said base to define between said plate and base annular groove means, opposed, spaced faces of said plate and of said base being shaped to trap said elastic material of said body in said annular groove means, and means on said plate defining radially extending notches receiving said elastic material, said means on said plate defining radially extending notches comprising radial projections which widen out towards their radially outer ends.

4,063,434

PLUNGER-OPERATED LOCK

Sigurd M. Moberg, Etlan, Va., assignor to E. J. Brooks Company, Newark, N.J.

Filed Apr. 4, 1977, Ser. No. 784,111

Int. Cl.² E05B *67/36*

U.S. Cl. 70—34 **4 Claims**

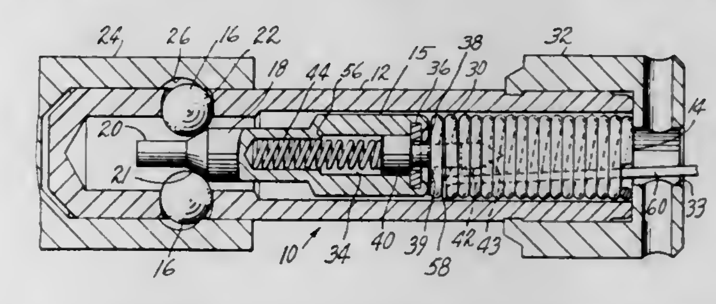

1. A lock of the plunger-operated type, having a housing with an opening at one end, a lock-operating plunger axially movable in the housing between a locking and an unlocking position and biased forwardly away from the opening by a coil spring, and a tool-engagable member mounted on the plunger, said components being so arranged that pulling on the tool-engagable member compresses the coil spring and moves the plunger toward the unlocking position, the components being so dimensioned that complete compression of the coil spring is required to permit the plunger to reach the unlocking position.

4,063,435
PADLOCK CLOSURE
Roy N. Oliver, 3655 Ellen Drive, Salem, Va. 24153
Filed Oct. 1, 1976, Ser. No. 728,787
Int. Cl.² E05B *67/24*
U.S. Cl. 70—38 A **1 Claim**

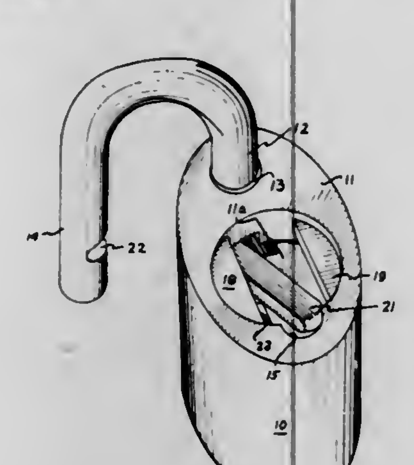

1. In a padlock having a U-shaped shackle including a confined leg and a shorter non-confined leg protruding respectively from sockets in the top of the padlock, a body enclosing a detachably fixed lock cylinder removable through an opening in the top of the padlock, the top opening being of circular shape having a diameter less than the minimum distance between the shackle legs merging into an approximately semi-circular shape having a diameter just larger than that of the shorter shackle leg, the body portion including fixed bayonet coupling portion therein, a closure comprising a circular rotatable member for the opening having on its underside a bayonet coupling portion which cooperates with the bayonet coupling portion of the body and, the closure member on rotation sealing and closing the opening except for the shorter shackle leg opening portion thereof, so that when the padlock is locked the closure member is locked by the shorter shackle leg, and when the padlock is unlocked the shorter shackle leg only when removed allows the closure member to be removed for removal of the detachably fixed lock cylinder.

4,063,436
STRONGHOLD COMBINATION LOCK
Norman Miller, Lafayette, Ind., assignor to Schwab Safe Co., Inc., Lafayette, Ind.
Filed Oct. 22, 1976, Ser. No. 734,972
Int. Cl.² E05B *65/06, 63/20, 37/04*
U.S. Cl. 70—133 **6 Claims**

1. A combination lock for locking a door comprising:
a combination dial having a shaft for rotation therewith and adapted for extending through an aperture in said door and for sliding movement in said aperture along said door;
a locking bolt;
means coupling said bolt to said dial for sliding movement therewith between a latch and a release position, including a wheel post having a bore through which said shaft extends, said bolt being mounted about said post;
a lock stand adapted to be fixed to said door and having a fence;
a plurality of locking wheels engaging said shaft for rotation therewith, each of said wheels having a slot and being positioned so that when said slots are aligned adjacent said fence, said bolt, dial, and locking wheels can be moved by manually applied lateral pressure to said dial from said release to said latch position as said aligned slots move into said fence;
a first spring extending about said post and attached at opposite ends to said stand for urging said dial, bolt and wheels toward said locking position; and
detent means adapted to be pivotably fixed to said door and releasably engaging said bolt in said release position to retain said bolt in said release position, including a pivot pin, a detent member having an upstanding detent portion for engaging a cut-out portion of said bolt, an aperture through which said pin extends to define a pivot point and a cam surface for engaging a rail on the door jamb when the door is closed to pivot said detent member so that said detent portion moves out of engagement with said cut-out

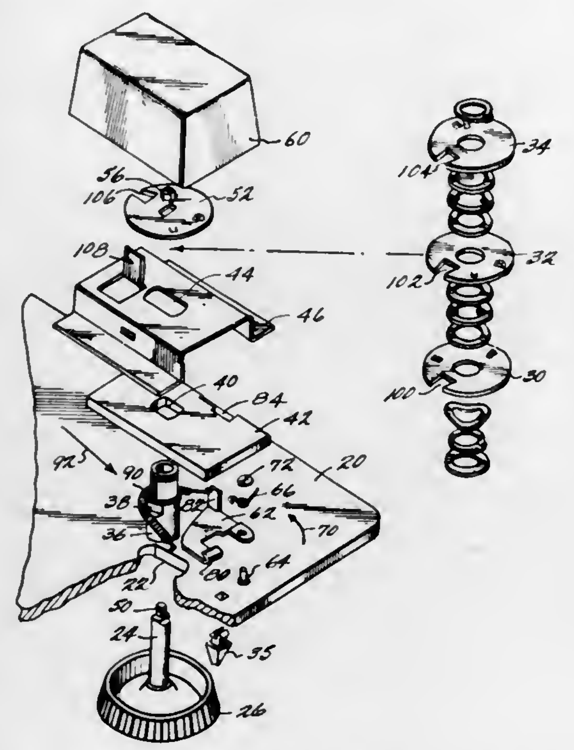

portion and said bolt can move to said latch position under the influence of said first spring, and a second spring disposed about said pin for engaging said detent member to urge rotation of said detent member about said pin in a direction causing said detent portion to engage said cut-out portion.

4,063,437
LOCK STRUCTURE
Iwao Matsui, Inazawa, and Yoshimitsu Ebisu, Nagoya, both of Japan, assignors to Tokai Rika Denki Seisakusho K.K., Aichi, Japan
Filed May 13, 1976, Ser. No. 686,063
Claims priority, application Japan, Dec. 9, 1975, 50-167016[U]
Int. Cl.² E05B *27/06*
U.S. Cl. 70—358 **8 Claims**

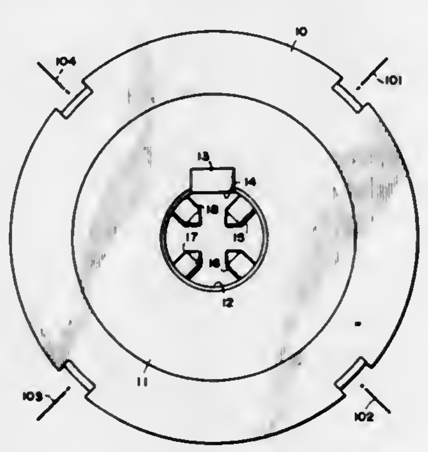

1. A lock structure and associated rod key comprising:
a cylinder lock comprising:
a. a rotor case;
b. a rotatable, pin-retaining rotor member disposed in said case, said rotor member having a key way configured to receive said rod key and a plurality of holes being radially disposed in said rotor member and extending outwardly;
c. pin members slideably disposed in said holes and;
d. a slideable locking plate coupled to a cam member, said plate and cam member disposed in said lock such that rotation of said rotor causes an activator coupled to said rotor to engage said cam member and thereby to remove said locking plate into a retracted position;
a rod key comprising:
e. a stick having at least eight sides; and
f. at least two different key patterns provided in alternate sides of said stick, said key patterns being arranged and configured such that they correspond with pin members of at least two different cylinder locks whereby said single rod key may unlock at least two locks with different pin member distributions.

4,063,438
METHOD OF CONTROLLING TANDEM ROLLING MILLS
Kunio Sekiguchi, Kawagoe, Japan, assignor to Tokyo Shibaura Denki Kabushiki Kaisha, Kawasaki, Japan
Filed Dec. 7, 1976, Ser. No. 748,369
Claims priority, application Japan, Dec. 10, 1975, 50-147162
Int. Cl.² B21B *37/00*
U.S. Cl. 72—6 **1 Claim**

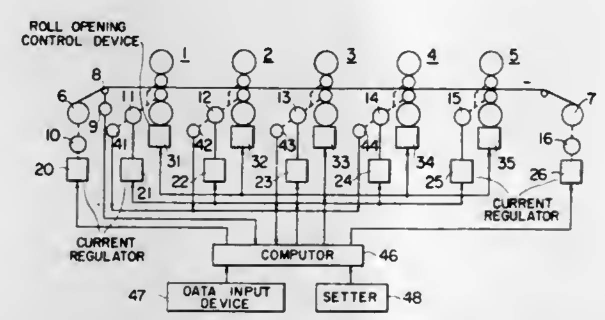

1. A method of controlling a tandem rolling mill including n stands, where n is an integer, and utilized to roll a metal strip, said method comprising the steps of, at the time of changing the pass schedule during the operation of the mill, and before the size changing point of the strip reaches the first stand; changing the roll speed of the last stand to that of after size changing; changing the roll speeds of the other mill stands while maintaining the speed ratio of before size changing; when the size changing point reaches any intermediate stand (ith stand) between the first and $(n-1)$th stands, changing the roll speed of the ith stand so as to maintain the exit strip speed thereof at the speed of before size changing; at the same time changing the roll opening of the ith stand so as to maintain the intermediate strip tension between the ith and $(i+1)$th stands at the value of before size changing but to change the exiting strip gauge of the ith stand to a predetermined target value of after size changing; changing the roll opening of the $(i-1)$th stand to a predetermined set value of after size changing; changing the roll speeds of the roll stands on the upstream side of the ith stand while maintaining the volume speed of after size changing; and when the size changing point reaches the last stand; changing the roll openings of the last and the $(n-1)$th stands to predetermined set values of after size changing while at the same time changing the roll speeds of the first to the $(n-1)$th stands to predetermined preset values of after size changing.

4,063,439
APPARATUS FOR CALIBRATING AND SURFACING TUBES
Louis A. Besson, Romainville, France, assignor to Chabas & Besson S.A., Romainville, France
Division of Ser. No. 403,628, Oct. 4, 1973, abandoned, which is a continuation-in-part of Ser. No. 193,632, Oct. 29, 1971, Pat. No. 3,779,064. This application Sept. 22, 1975, Ser. No. 615,815
Claims priority, application France, Nov. 6, 1970, 70.39913
The portion of the term of this patent subsequent to Dec. 18, 1990, has been disclaimed.
Int. Cl.² B21C *1/24, 9/00*
U.S. Cl. 72—45 **4 Claims**

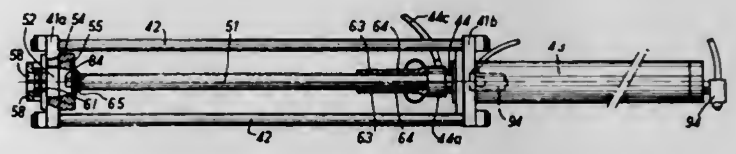

1. In a calibrating and surfacing machine for tubes having a fixed frame, means for holding a tube on said frame, an internal tool carrying stem for said tube mounted from said frame for movement internally with respect to said tube, a tool removably fixed to one end of said stem for working the internal surface of said tube, said tool having a working surface which is limited for part of its external surface at least by a surface of revolution with a profile which increases in a constant manner from a first end plane of the tool, which corresponds to the point of entry into contact of the tool with the tube, to a second end plane of said tool, which corresponds to the place at which the contact of the tool with the tube ends, with a maximum depth from said point of entry to the point where the contact of the tool with the tube ends greater than the maximum depth of the defects on the interior surface of the tube but small enough to insure displacement of the tool along the axis of the tube by a force which does not exceed the mechanical resistance of the tube, a piston movable axially with respect to said tube, the improvement comprising means including an externally threaded flanged end on said tool carrying stem removably connecting an outer end of said piston with the end of said stem opposite the end removably fixed to said tool, means forming an internal passageway running axially through said stem from said flanged end and terminating internally of said stem adjacent the point where said tool is attached, one or more passageways extending outwardly from said internal passageway to the surface of said stem adjacent said tool and means to introduce a lubricant into said internal passageway at said flanged end of said tool carrying stem.

4,063,440
QUICK-CHANGE COILER ASSEMBLY FOR STRIP MILLS AND THE LIKE
Joseph O. Brashear, Glenshaw, Pa., assignor to Mesta Machine Company, Pittsburgh, Pa.
Filed Apr. 16, 1976, Ser. No. 677,703
Int. Cl.² B21C *47/06*
U.S. Cl. 72—148 **11 Claims**

1. A prepackaged coiler assembly comprising a foundation and a housing removeably mounted on said foundation; wherein said housing includes a plurality of wrapper rolls, a support for each of said wrapper rolls movably mounted on said housing, motive hold down means coupled to each of said supports and mounted on said housing; said motive means being disposed for urging said supports and said rolls toward a mandrel mounted on said foundation independently and centrally of said wrapper rolls and for withdrawing said supports and rolls from said mandrel and from a strip coil thereon to permit ejection of said coil through a side opening in said housing; at least one of said motive means being disposed for withdrawing the associated wrapper roll and support to a

further withdrawn position for direct lifting of said prepackaged assembly from said foundation vertically past said mandrel with clearance; said housing having a bottom opening for passage of said mandrel therethrough.

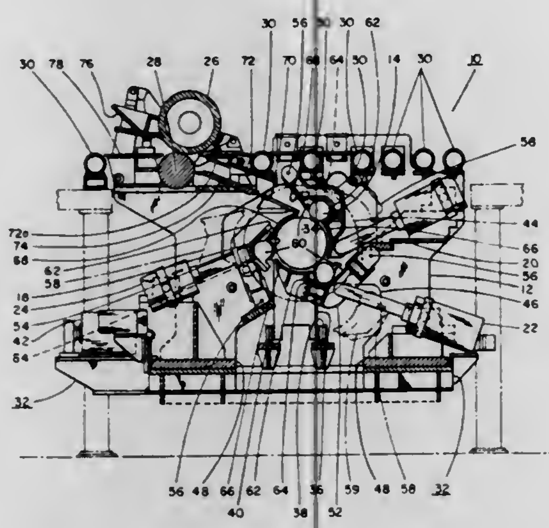

4,063,441
APPARATUS FOR BENDING TUBES
Homer L. Eaton, Balboa, Calif., assignor to Eaton-Leonard Corporation, Santa Ana, Calif.
Continuation-in-part of Ser. No. 614,946, Sept. 19, 1975, abandoned. This application June 3, 1976, Ser. No. 692,585
Int. Cl.² B21D *7/04*
U.S. Cl. 72—151 **31 Claims**

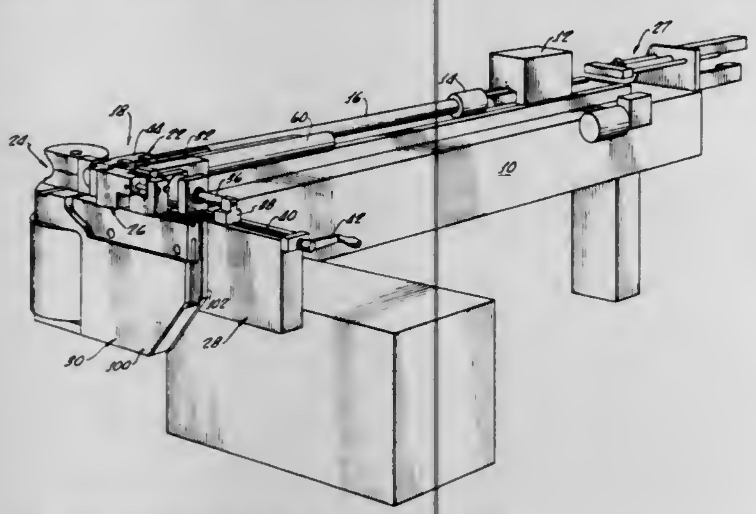

1. Tube bending apparatus comprising
a rotatably mounted bend die,
clamp die means cooperating with said bend die for clamping a portion of a tube therebetween,
pressure die means for pressing a second portion of said tube,
means for rotating said bend die and clamp die means to bend said tube around said bend die,
means for mounting said pressure die means for movement with said tube as said bend die and clamp die means are moved through an initial portion of rotation, and
means for restraining motion of said pressure die means during a subsequent portion of the rotation of said bend die and clamp die means.

4,063,442
METHOD AND APPARATUS FOR FORMING TUBES
Robert P. Martin, Sr., 7809 W. 130th St., Parma, Ohio 44130
Filed Nov. 29, 1976, Ser. No. 745,558
Int. Cl.² B21D *5/12*
U.S. Cl. 72—166 **14 Claims**

1. A tube forming machine for shaping a sheet metal blank having a predetermined thickness into a cylindrical tube comprising a frame, an elongated mandrel having a cylindrical outer surface, first bearing means supporting said mandrel, a forming roll having a cylindrical outer surface adjacent said cylindrical outer surface of said mandrel, second bearing means supporting said forming roll, a continuous forming belt extending along a path first around a predetermined circumferential extent of said forming roll and then between said cylindrical outer surfaces of said forming roll and said mandrel and then around a predetermined circumferential extent of said mandrel, said forming belt having an interior surface and an exterior surface, said first and second bearing means holding said forming roll and said mandrel sufficiently close as to

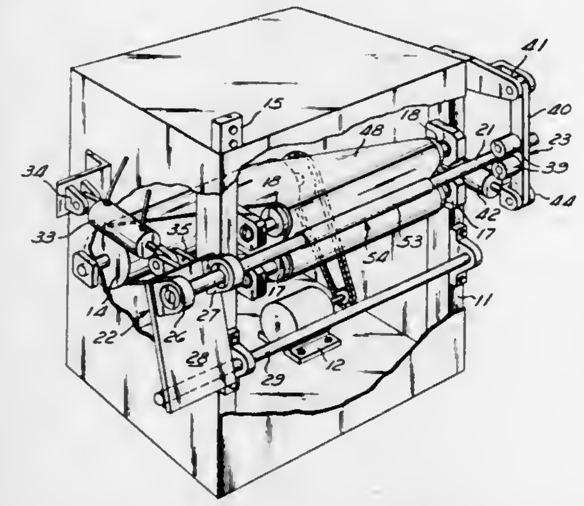

define an entry opening therebetween for receiving said workpiece when said mandrel is in an operating position, the width of said opening being no greater than the sum of said thickness of said forming belt plus said thickness of said sheet metal blank when said mandrel is in said operating position, and actuator means moving said mandrel and said first bearing means relative to said frame and relative to said forming roll and said second bearing means in a direction toward said operating position to simultaneously tighten said belt and squeeze said belt against said forming roll.

4,063,443
ROD GRIPPING TOOL FOR APPLYING FASTENERS
Garrett Yarbrough, Buffalo Grove, Ill., assignor to H. K. Porter Company, Inc., Pittsburgh, Pa.
Filed Nov. 5, 1976, Ser. No. 739,235
Int. Cl.² B21J *15/34*
U.S. Cl. 72—391 **8 Claims**

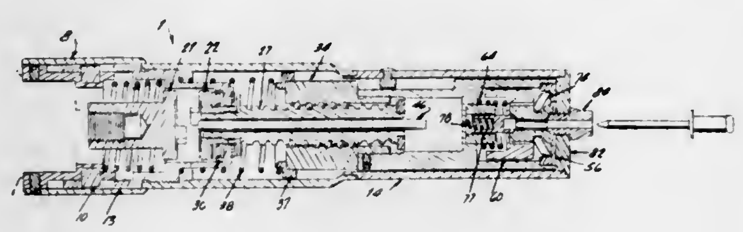

1. A tool for releasably gripping a rod comprising:
a support structure;
a rod clamping assembly connected to said structure and movable relative to said structure;
a release means connected to said structure and adapted to cooperate with said clamping assembly, when said clamping assembly and said structure are at one end of said relative movement, to release a said rod gripped by said clamping assembly; and
means for producing said relative movement;
wherein, upon operation of said means to produce said relative motion, away from said one end, a said rod, when gripped by said clamping assembly, is moved longitudinally relative to said structure;
wherein the means for producing said relative movement comprises:
a motion converter having first and second members supported by said structure and adapted to convert rotary motion of said first member into linear motion on said second member and vice versa;
a clutch supported by said structure, having a driving member and a driven member connected to transmit rotary motion to said first member;
means for selectively engaging said clutch;
means to disengage said clutch; and
biasing means connected to bias said second member in opposition to the linear motion produced by said rotary motion; and
wherein said second member is connected to transmit said linear motion to said clamping assembly to produce said relative motion, away from said one end, in opposition to the bias of said biasing means, when said clutch is engaged by said selective engaging means to transmit a rotary input motion to said first member;
said clutch disengaging means cooperates with said clutch to contact and disengage said clutch when said relative motion has produced a predetermined travel of said clamping assembly away from said one end;
said biasing means being connected to return said second member and said clamping assembly to said one end of said relative motion upon disengagement of said clutch.

4,063,444
OFFSET PIPE BENDING DEVICE
John B. Vecho, Jr., 1223 Country Club Road, Monongahela, Pa. 15063
Filed Oct. 26, 1976, Ser. No. 735,496
Int. Cl.² B21D *7/02*
U.S. Cl. 72—459 **4 Claims**

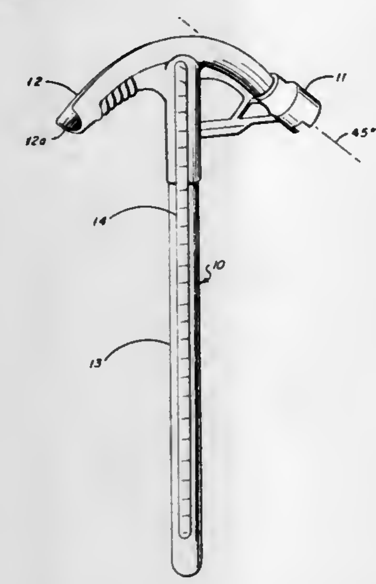

1. A method for adapting an existing manual pipe bender, of the type having a single forming head and a handle, for performing accurately and readily offset bends, which comprises:
1. providing an adhesive tape having a scale thereon of incremental markings such that:
a. the first increment, marked 1, is actually one-fourth of an inch from one end,
b. the second increment, marked 2, is actually one and one-half inches from said one end,
c. the third increment, marked 3, is approximately 3 inches from said one end,
d. the fourth and subsequent increments are located at 1 inch intervals from the third increment,
2. applying said tape longitudinally to the handle of the bender such that the said one end of the tape abuts the forming head.

4,063,445
BENDING PRESS
Eduard A. Haenni, Zofingen; Vaclav Zbornik, Oftringen, and Walter Gygli, Niederbipp, all of Switzerland, assignors to Haemmerle AG Maschinenfabrik, Zofingen, Switzerland
Filed Feb. 24, 1977, Ser. No. 771,746
Claims priority, application Austria, Apr. 3, 1976, 2405/76
Int. Cl.² B21D *5/01*
U.S. Cl. 72—465 **9 Claims**

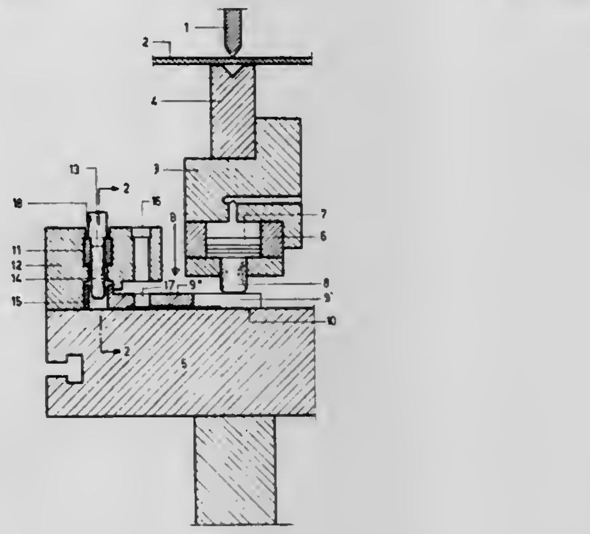

1. A machine for processing metal in sheet or plate form, especially for bending metal sheets, comprising:
a machine frame,
a table base on said frame,
a ram vertically displaceable in relation to said table base,
an upper tool mounted on said ram,
a lower tool disposed on said table base,
said upper and said lower tools cooperating for processing said metal sheet therebetween,
elastically-resilient supporting means for supporting said lower tool on said table base,
said supporting means consisting of a plurality of individual, resilient supports arranged in a row or series on said table base,
a plurality of intermediate parts inserted between said table base and said plurality of individual supports, said intermediate part being displaceable out of the effective region of selected supports in groups and into a neutral position in which said selected supports are ineffective, and
an actuating member for the common displacement of said groups of intermediate parts into said ineffective neutral position.

4,063,446
METHOD OF AND APPARATUS FOR AUTOMATICALLY DETECTING TRACES OF ORGANIC SOLVENT VAPORS IN AIR
Hans Fuhrmann, Pannsweg 2, 2000 Hamburg 62, Germany
Continuation of Ser. No. 573,421, May 1, 1975, abandoned. This application Oct. 21, 1976, Ser. No. 734,614
Claims priority, application Germany, May 8, 1974, 2422270; Dec. 16, 1974, 2459343
Int. Cl.² G01N *31/06*
U.S. Cl. 73—1 G **5 Claims**

1. Apparatus for the automatic determination of traces of organic solvent vapors in air, using a non-specific gas detector, particularly a gas semiconductor as a measuring cell, by comparative measurements of the test gas containing the measuring components with a reference gas containing the measuring component, comprising a feed line for test gas, the feed line connected with a gas pump to which is attached a flow controller, a gas detector functioning as a measuring cell including a control valve, a first branch pipe opening below the latter into the feed line, the first branch pipe including an activated charcoal filter with attached control valve, a second branch

pipe between the active charcoal filter and the measuring cell, said second branch pipe connected with an outlet connection of a calibration unit which has a control valve ahead of the calibration unit and a capillary tube arranged between the latter and the calibration unit, the control valves being designed as magnetic valves and connected to a program switch mechanism, said calibration unit comprising a heat-insulated, washbottle-type container with a feed pipe for the test gas

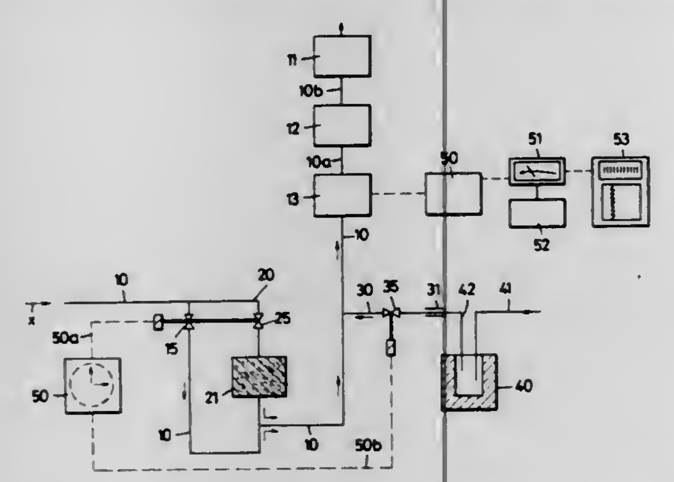

liberated of the measuring component, which terminates with its free end above the level of the liquid in the calibrating container, and with a discharge pipe arranged in the upper dome of the container, for discharging the solvent vapor concentration from the calibration unit and a large surface evaporator arranged in the interior of the container, which is formed at least of one star-shaped cuff of filter paper and of severally concentrically arranged cylindrical ceramic bodies.

4,063,447
BRIDGE CIRCUIT WITH DRIFT COMPENSATION
Leslie C. Mathison, Houston, Tex., assignor to Honeywell, Inc., Minneapolis, Minn.
Filed Mar. 14, 1977, Ser. No. 777,534
Int. Cl.² G01N *25/18*
U.S. Cl. 73—27 R **14 Claims**

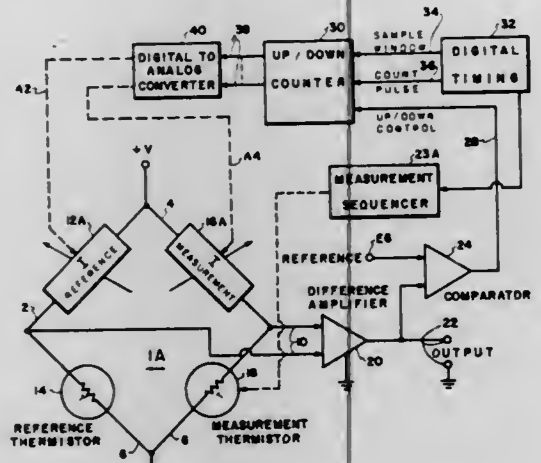

1. A bridge circuit apparatus comprising:
a bridge circuit having four legs and a pair of outputterminals,
a process variable sensor connected in one leg of said bridge circuit,
comparing means for comparing a bridge output signal on said output terminals with a reference signal to produce an output signal representative of the comparison,
bridge output adjusting means connected in a second leg of said bridge circuit, and responsive to an energizing signal to adjust the output signal from said bridge circuit applied to said comparing means,
control means responsive to an output signal from said comparing means for producing the energizing signal to energize said bridge output adjusting means to reduce the difference between the bridge output signal and said reference signal.

4,063,448
DENSITY METER COIL ASSEMBLY
Joram Agar, Houston, Tex., assignor to Agar Instrumentation Inc., Houston, Tex.
Filed Aug. 25, 1976, Ser. No. 717,787
Int. Cl.² G01N *9/00*
U.S. Cl. 73—32 A **6 Claims**

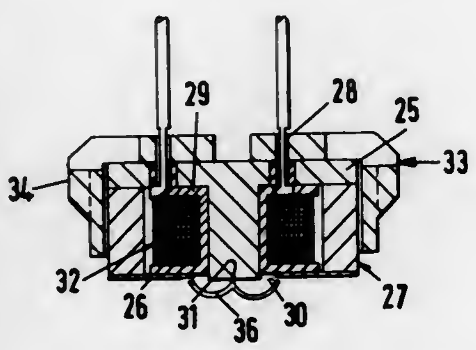

1. Apparatus for measuring the density of a fluid, said apparatus comprising a sensing tube adapted to have said fluid passing through its interior, a drive coil assembly for exciting said sensing tube to vibrate at a resonant frequency, and a detecting coil assembly for detecting a signal representative of the frequency of said vibrations, the frequency of said signal in operation being dependent upon the density of said fluid; each said coil assembly comprising a housing of magnetic material having first and second circular end walls and a cylindrical permanent magnet disposed between and interconnecting said first and second end walls, said second end wall having means defining a centrally disposed aperture therein; a pole piece which extends from the first end wall and into the said aperture; and a coil which is mounted in the housing with the said pole piece extending axially therethrough, magnetic flux passing outwardly of the housing only through said aperture and being focussed by the latter onto a region of said sensing tube which is diametrically opposite to the region thereof onto which impinges the flux from the other coil assembly, cross-coupling between the coil assemblies being thus avoided.

4,063,449
AIR GAUGE FOR NOZZLE ASSEMBLIES
Elmer L. Griggs, 1720 Toledo, Burlingame, Calif. 94010
Filed Oct. 21, 1976, Ser. No. 734,444
Int. Cl.² G01F *25/00*
U.S. Cl. 73—37.5 **8 Claims**

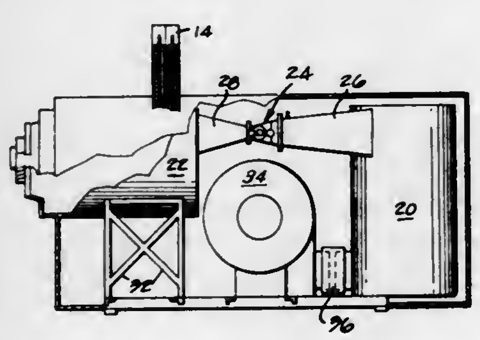

1. An air gauge for measuring the flow area of a nozzle assembly, comprising:
housing means,
an adaptor on said housing means for receiving the nozzle assembly,
a first air chamber within said housing in air communication with said nozzle assembly ,
a second air chamber within said housing and in air communication series with said first air chamber,
an adjustable air valve intermediate said first and second chambers,
measuring means connected separately to said first chamber and to said second chamber for measuring the air pressures therein, and
air moving means carried by said housing for supplying air sequentially through said first chamber, said air valve, said second chamber and said nozzle assembly.

4,063,450
VOLTAGE CONTROLLED ELECTRONIC FILTER
Prentice Coleman Lyons, Cincinnati, Ohio, assignor to General Electric Company, Lynn, Mass.
Filed July 2, 1976, Ser. No. 702,316
Int. Cl.² G01N *29/00*
U.S. Cl. 73—579 **11 Claims**

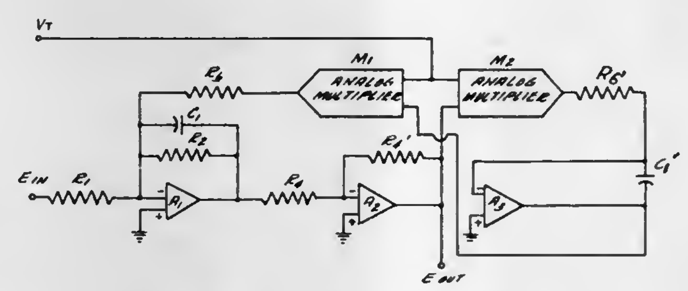

1. An electronic filtering system comprising:
an active filtering network having adjustable response characteristics;
means for varying the Q of the filtering network as a function of the magnitude of an applied DC voltage, and
means for maintaining the gain of the filtering network constant as the Q is varied.

4,063,451
SCANNING
Jacques Dory, Meaux, France, assignor to Realisations Ultrasoniques, France
Filed Apr. 29, 1975, Ser. No. 572,790
Claims priority, application France, Apr. 29, 1974, 74.14930
Int. Cl.² G01N *29/00*
U.S. Cl. 73—618 **9 Claims**

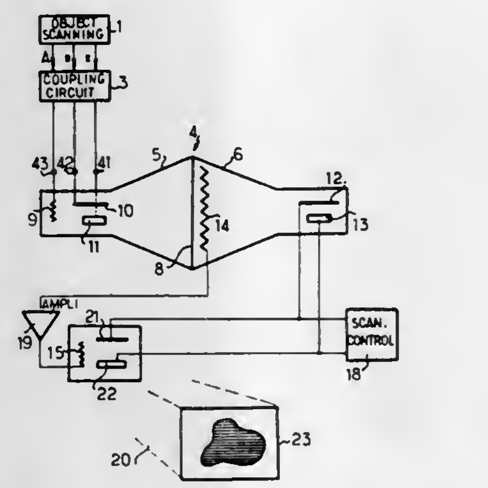

1. A system for the exploration of an object through scanning said object with a narrow continuous wave radiating beam, radiated by a transmitter transducer and towards a receiver transducer which supplies a reception signal said transducers being located on either side of said object and being synchronously linearly and angularly displaced in order that the beam occupies sets of successive parallel positions, the sets being angularly offset by a pedetermined angle with respect to each other, which results in a full scanning of the object according a given scanning plane and under various angles of attack, said system further comprising:
a. a device comprising writing means, and recording means including a surface capable of charge storage and of memorization and
b. further means for making said writing means scan said surface with a scanning law homothetic to the law of scanning of said object with said narrow beam, said writing means supplying a writing beam, focused onto said surface, one of the parameters of said writing beam, velocity or intensity, being modulated by said reception signal, while the other of said parameters is kept constant, and one scan line corresponding to each position of the assembly built up by said transducers.

4,063,452
METHOD AND DEVICE FOR MONITORING VAPOR CONCENTRATION AT A PHASE INTERFACE
Thomas Ian Bradshaw, Shoreview, Minn., assignor to Minnesota Mining and Manufacturing Company, Saint Paul, Minn.
Continuation-in-part of Ser. No. 591,329, June 30, 1975, abandoned. This application Feb. 13, 1976, Ser. No. 658,114
Int. Cl.² G01N *19/10*
U.S. Cl. 73—73 **17 Claims**

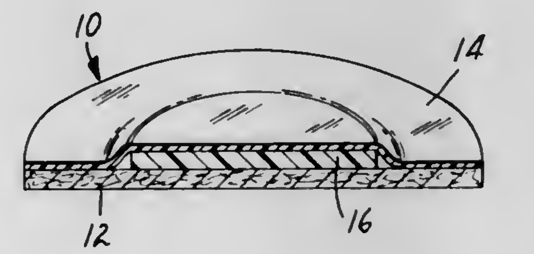

1. A device for monitoring and indicating the concentration of a vapor at a phase interface comprising
a. a sensing means for comparing the concentration of a selected vapor component in a sample with a standard which is representative of a selected parametric concentration of said vapor in said sample, said sensing means including means for indicating the concentration of said vapor in said sample relative to said standard, and
b. a differentially vapor permeable, liquid impermeable envelope enclosing said sensing means to responsively couple said sensing means to a vapor source phase at said phase interface, said envelope comprising a base adapted to rest on said vapor source phase and a cover for said base, said base and said cover vapor permeable defining a sealed, closely conforming envelope containing said sensing means, said cover having a vapor transmission rate equivalent to a water vapor transmission rate of between 20 and 60 grams/1000 cm²/24 hours, said base having a vapor transmission rate at least 50% greater than the vapor transmission rate of said cover, said cover adapted for viewing said indicating means.

4,063,453
ADJUSTABLE SPACE FRAME FOR TESTING MACHINE
Martin M. Gram, Minneapolis, Minn., assignor to MTS Systems Corporation, Eden Prairie, Minn.
Filed Mar. 3, 1977, Ser. No. 773,960
Int. Cl.² G01N *3/10*
U.S. Cl. 73—103 **12 Claims**

1. In a load frame having a first platen and a second platen, at least one pair of spaced columns mounted on said first platen adjacent a side edge thereof, said second platen being mounted on said columns and being movable relative to said first platen to a desired position, means to support said second platen on said columns, and a diagonally extending strut means connected to both of said platens at locations on the respective

platens displaced in lateral direction relative to the axes of the columns from mounting of the diagonal strut on the other

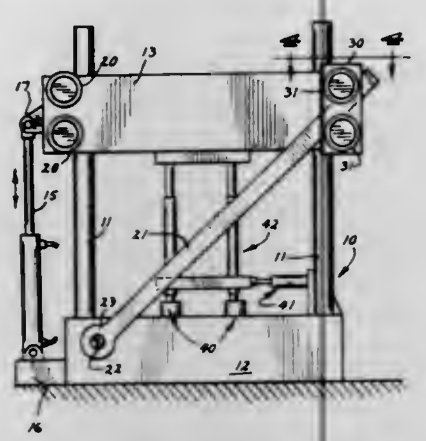

platen, and means to releasably secure said strut means from movement relative to both platens.

4,063,454
FIELD TEST ASSEMBLY FOR MEASURING COMPRESSIVE LOADS
Terrance E. Hill, Columbus, and George R. Riley, Grove City, both of Ohio, assignors to The United States of America as represented by the Secretary of the Army, Washington, D.C.
Filed Nov. 5, 1976, Ser. No. 739,180
Int. Cl.² G01L *1/22*
U.S. Cl. 73—141 A **1 Claim**

1. A compression test assembly comprising:
a. a stud type strain transducer;
b. a support plug attached to one end of said transducer;
c. a piston member attached to the other end of said stud type strain transducer; and
d. a housing surrounding said plug and said piston in a manner that permits relative axial movement between said piston and said plug;
wherein said plug has an end of reduced cross-section for receiving an end of a support pole and said housing has an axial opening adapted to overlay said plug and said pole.

4,063,455
FLOW METER
Nils O. Rossen, West Bloomfield, Mich., assignor to Nancy Helen Rossen, Ann Arbor, Mich., a part interest
Filed June 21, 1976, Ser. No. 698,263
Int. Cl.² G01F *1/28*
U.S. Cl. 73—228 **11 Claims**

1. A flow meter for a fluid system comprising:
a housing having an inlet and an outlet adapted to be connected with said system, and a substantially hemispherical interior wall section,
a rotatably mounted shaft in said housing, said shaft having one axial end accessible exteriorly of said housing,
means formed on the accessible end of said shaft for detachable axial connection with a tool whereby upon connection of said tool with said end of said shaft, said shaft rotates in unison with said tool, said tool being adapted for manually rotating said shaft,
a vane secured to said shaft, said vane having substantially semicircular outer edge rotatable adjacent said hemispherical wall section;
wherein the center of said hemispherical wall section is displaced from the center of the hemisphere circumscribed by the outer edge of the vane whereby the space between the outer edge of said vane and the hemispherical wall section varies at each rotated position of said vane, and

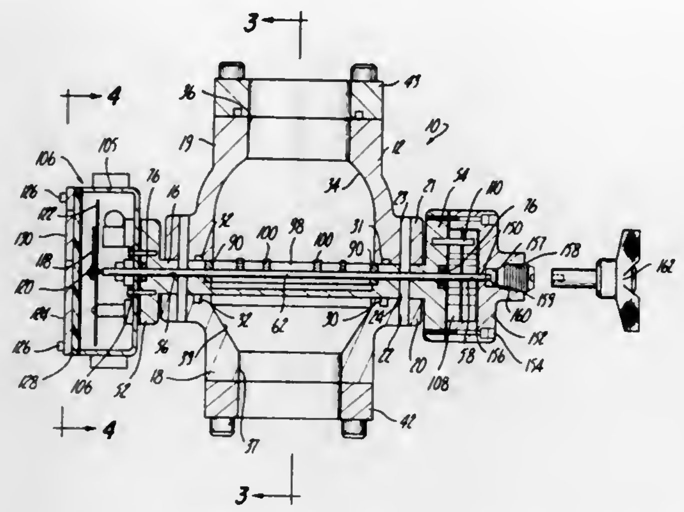

means for indicating the rotation position of said vane exteriorly of said housing.

4,063,456
METHOD AND A DEVICE FOR CONTINUOUSLY MEASURING A FLOW OF MATERIAL
Cornelius Otto Jonkers, Morshoekweg 5, Hengelo (O), Netherlands
Filed Aug. 30, 1974, Ser. No. 502,079
Claims priority, application Netherlands, Sept. 3, 1973, 7312131
Int. Cl.² G01F *1/28*
U.S. Cl. 73—228 **10 Claims**

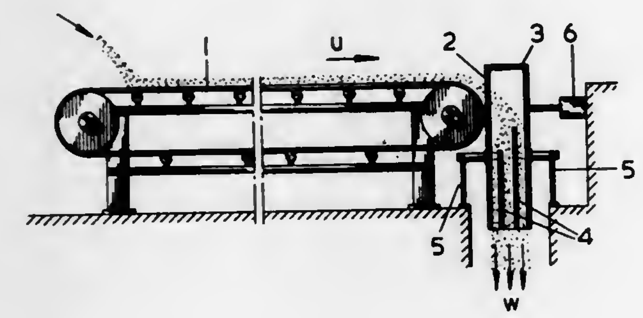

1. A device for continuously measuring a flow of material in mass per unit time by measuring the momentum occurring by a change of movement of the material comprising, in combination, a conveying device for advancing the material at a speed having a known horizontal component, a movably mounted impact device having a surface for receiving material discharged from said conveying device in an impact direction such that the momentum of the material acting in the direction of said speed horizontal component exerts a horizontal force thereon, said impact device being arranged to reduce the speed horizontal component of the material in said impact direction to zero, discharge means for discharging the material from said impact device in a direction perpendicular to the direction of said speed horizontal component, a stationary support, and force measuring means mounted between said impact device and said stationary support for measuring said horizontal force of momentum to which said impact device is subjected by said material impacted thereon.

4,063,457
ULTRASONIC LEVEL SENSING DEVICE
Nikita Zekulin, Locust Valley, and George L. Adams, Bayshore, both of N.Y., assignors to Envirotech Corporation, Menlo Park, Calif.
Filed Sept. 27, 1976, Ser. No. 727,201
Int. Cl.² G01F *23/28;* **G01S** *9/66*
U.S. Cl. 73—290 V **16 Claims**

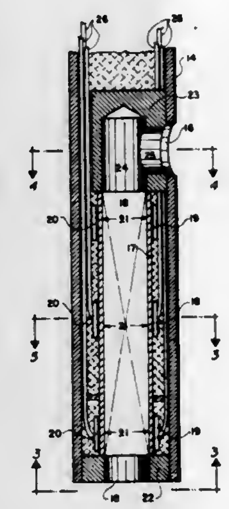

1. A level detector for a sensing system in which the level detector is mounted to extend into a vessel for detecting the presence of liquid at a plurality of levels in the vessel comprising:
a. an elongated tubular housing including an inlet means at its lower end to admit a liquid to the interior of said housing, and an outlet means at its upper end for allowing gas to flow into and out of said tubular housing to equalize the pressure therein with that in the vessel;
b. a tubular member made of a material and having a cross-sectional configuration to prevent cross talk and mounted within said tubular housing and spaced therefrom, said tubular member having a means for sealingly connecting said tubular housing and said tubular member, at said outlet means and defining within said tubular housing an interior passage between said inlet means and said outlet means so as to admit liquid to the interior passage to the same level as the liquid is in the vessel;
c. a plurality of means for transmitting an ultrasonic signal at the plurality of levels, said means of said plurality being mounted between said tubular housing and said tubular member at spaced apart vertical intervals along said tubular member and positioned so as to transmit ultrasonic signals transversely across the interior passage;
d. a plurality of second means for receiving the ultrasonic signals at the plurality of levels, each of said second means of said plurality being mounted between said tubular housing and said tubular member at spaced apart vertical intervals along said tubular member opposite, across and paired with a corresponding one of said transmitter means; each of said paired transmitter means and second receiver means providing a signal path therebetween across the interior passage.

4,063,458
METHOD AND APPARATUS FOR OPERATING INSTRUMENTS SUBJECT TO RADIATION
Hans-Wilhelm Vogt, Cologne, and Gerd Frogermann, Solingen, both of Germany, assignors to Klockner Humboldt Deutz Aktiengesellschaft, Germany
Filed July 27, 1976, Ser. No. 709,241
Int. Cl.² G01J *5/02;* **G01K** *1/12*
U.S. Cl. 73—355 R **8 Claims**

1. An apparatus for protecting an instrument subject to radiation against excessive radiation which comprises a radiation shield movable into a radiation shielding position between the radiation source and said instrument, spring means holding said radiation shield in radiation shielding position, holding means for holding said radiation shield out of said radiation shielding position, a release means operable to deactuate said holding means and thereby bring said radiation shield into said

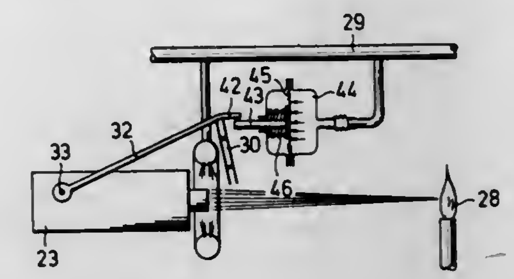

radiation shielding position, cooling means for cooling said instrument and sensor means associated with said cooling means and arranged to operate said release means upon change in the output of said cooling means.

4,063,459
VARIABLE-SPAN PRESSURE GAUGE
George A. Prell, 14202 Galy St., Tustin, Calif. 92680
Filed Jan. 31, 1977, Ser. No. 764,441
Int. Cl.² G01L *7/08*
U.S. Cl. 73—397 **10 Claims**

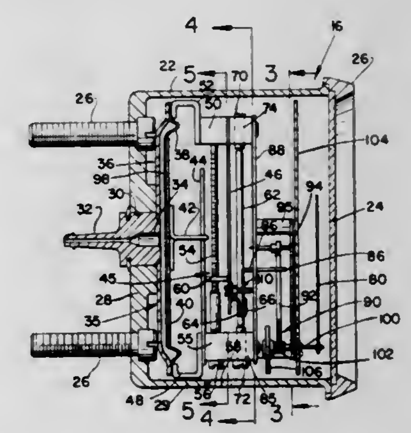

1. A variable-span pressure gauge adapted to be employed in conjunction with non-mechanical, liquid-level indicators having a pressure-responsive system, wherein said gauge comprises:
a housing having a dial-indicator plate removably mounted therein;
means for attaching said pressure-responsive system to said gauge;
means forming a pressure-responsive chamber to receiver pressure from said pressure-response system;
a first, flexible, spring-lever member arranged to be actuated by said pressure-responsive chamber;
a second, flexible, spring-lever member spaced apart and positioned above said first, flexible, spring-lever member in a substantially parallel relationship to one another;
variable adjusting means interposed between said spaced-apart, flexible, spring-lever member to control the movement ratio therebetween;
a motion shaft rotationally supported in said housing;
coupling means mounted between said second spring-lever member and said motion shaft to transfer linear motion of said second spring lever into rotational motion of said motion shaft;
a gear train operably arranged to be driven by the movement of said motion shaft;
drive means mounted to said motion shaft and operably engaging said gear train;
a pointer having a pointer shaft connected to said gear train to actuate said pointer in an arcuate movement; and
biasing means arranged with said gear train and said pointer to control movement of said pointer.

4,063,460

METHOD FOR EVACUATING AND THEN COLLECTING MEDIUM SAMPLES IN CONTAINERS SEALED BY A RESILIENT STOPPER AT SUBSTANTIALLY ATMOSPHERIC PRESSURE

Jan Axel Svensson, Hakarpsvagen 53, S-561 00 Huskvarna, Sweden

Continuation-in-part of Ser. No. 608,809, Aug. 28, 1975, abandoned. This application Aug. 26, 1976, Ser. No. 717,814

Int. Cl.^{2} B01L *3/14;* **B65B** *31/08;* **G01N** *1/14, 33/16*

U.S. Cl. 73—425.6 **4 Claims**

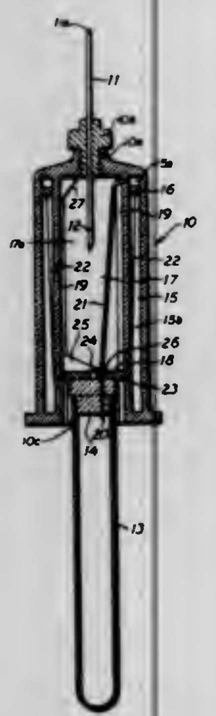

1. A method for the evacuation of containers having a resilient stopper sealing the interior of the container at substantially atmospheric pressure well prior to the collection of the sample, and the collection of medium samples therein, which comprises, at or shortly before the time of collection of the sample, piercing the stopper by a first cannula connected at one end to a pressure-reducing device, thereby forming an opening through the stopper occupied by the cannula, and connecting the interior of the container with the pressure-reducing device via the first cannula; evacuating the container to a desired subatmospheric pressure; withdrawing the first cannula from the interior of the test tube sufficiently to permit the stopper opening to close after such withdrawal; penetrating the stopper by a second cannula connected at one end to a medium source, thereby connecting the source with the interior of the container via the second cannula; and then sucking medium into the container under the influence of the subatmospheric pressure effected by means of the pressure reduction.

4,063,461

DEVICE FOR DETERMINING THE ANGULAR UNBALANCE POSITION IN A BALANCING MACHINE FOR ROTATING PIECES

Luigi Buzzi, Via Risorgimento 60, Mandello del Lario (Como), Italy

Filed Sept. 17, 1976, Ser. No. 724,375

Claims priority, application Italy, Oct. 27, 1975, 7225/75

Int. Cl.^{2} G01M *1/22*

U.S. Cl. 73—462 **5 Claims**

1. A device for determining the angular unbalance position in a balancing machine for rotating pieces comprising

first pulse generating means, associated with the rotating piece to be balanced, to generate a succession of pulses at a constant frequency depending on the rotational speed of the piece;

second pulse generating means, associated with the rotating piece to be balanced, to generate a pulse each time the rotating piece passes through a predetermined angular position;

a continuously counting pulse counter means connected to both said first and second pulse generating means to count the constant frequency pulses generated by said first pulse generating means and to be periodically zeroed by the pulse generated by said second pulse generating means;

at least one vibration indicator means associated with the rotating piece to generate an unbalance indicator signal each time the rotating piece passes through an angular unbalance position;

pulse formation means connected to said vibration indicator means to convert said unbalance indication signal into a pulse, the position in time of which is indicative of the

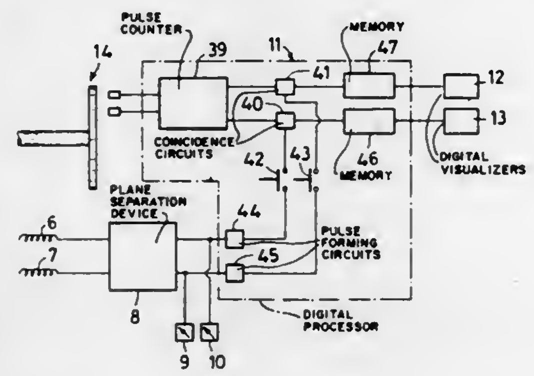

angular unbalance position of the rotating piece to be balanced;

memory means;

coincidence circuit means connected to said pulse counter means, said memory means, and to said pulse formation means, to determine and to transfer to said memory means that state of counting of said pulse counter means which coincides with said pulse indicative of the angular unbalance position;

and digital visualizer means connected to said memory means to provide visual representation of said memorized state of counting.

4,063,462

APPARATUS FOR THE DETERMINATION OF THE STATIC UNBALANCE OF A TEST BODY

Günther Himmler, Darmstadt, Germany, assignor to Gebr. Hofmann KG, Darmstadt, Germany

Filed May 7, 1976, Ser. No. 684,320

Claims priority, application Germany, Jan. 20, 1975, 2527592

Int. Cl.^{2} G01M *1/04*

U.S. Cl. 73—483 **5 Claims**

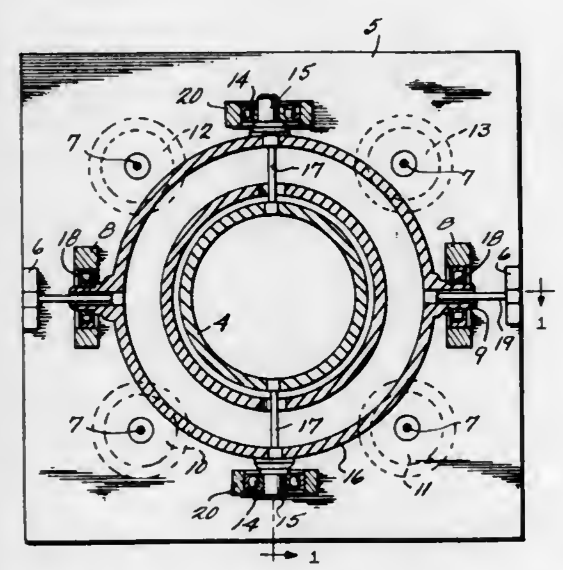

1. In an apparatus for the determination of static imbalance of a test body having a receiving plate for said test body, a gimbal ring mounting said plate, means for mounting said plate for movement about two perpendicular gimbal axes in a plane and in at least two degrees of freedom, at least first and second data receivers coupled to said plate for detecting forces produced by imbalance and producing a counter force to maintain said plate in a predetermined position, the improvement wherein said ring mounting means includes a plurality of antifriction bearings along one of the gimbal axes for supporting said plate in a radial direction extending perpendicular to said plane and with respect to the gimbal axes and a plurality of axially rigid torsion bars which extend in said plane and along one of the gimbal axes to support said plate in an axial direction with respect to the gimbal axes.

4,063,463

METHOD OF FITTING A FILTER BELT TO A FILTER ASSEMBLY

Rolf Gunnar Jonas Nordengren, Landskrona, Sweden, assignor to Nordengren Patenter AB, Landskrona, Sweden

Filed Sept. 7, 1976, Ser. No. 720,720

Claims priority, application Sweden, Sept. 5, 1975, 7509895; Dec. 12, 1975, 7514091

Int. Cl.^{2} F16G *1/00, 5/00*

U.S. Cl. 74—231 J **3 Claims**

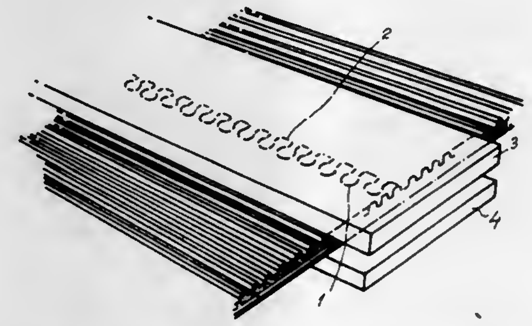

1. A belt blank having two end portions in which are disposed recesses arranged to receive in a friction-locking manner connecting members having at least one end of similar configuration to the configuration of said recesses so as to form an endless belt, wherein said recesses are disposed in both ends of the blank and arranged so that when the ends are brought together a pair of opposing recesses together have a dumbell configuration for receiving a connecting member, separate from said belt, of similar configuration.

4,063,464

AGRICULTURAL TRACTOR TRANSMISSION

Elmer R. Crabb, Pekin, Ill., assignor to Caterpillar Tractor Co., Peoria, Ill.

Filed Oct. 3, 1975, Ser. No. 619,340

Int. Cl.^{2} F16H *3/08*

U.S. Cl. 74—331 **9 Claims**

1. A transmission comprising:

a housing;

an input shaft rotatably mounted in the upper portion of said housing;

an output shaft rotatably mounted in said housing in substantially parallel relationship to said input shaft and spatially removed therefrom, said output shaft extending outwardly from the lower portion of said housing at opposite ends thereof;

first and second drive gears drivingly mounted on said input shaft;

first and second intermediate shafts rotatably mounted in substantially parallel relation to said input shaft and between said input shaft and said output shaft;

first and second power shift gears respectively intermeshing with the first and second drive gears, and rotatably mounted on the first intermediate drive shaft;

third and fourth power shift gears respectively intermeshing with the first and second drive gears, and rotatably mounted on the second intermediate drive shaft;

clutch means operable for selectively engaging each one of the plurality of intermediate drive gears with its respective intermediate shaft;

first and second spur gears each drivingly mounted respectively on said first and second intermediate shaft;

a transfer shaft rotatably mounted in said housing in a substantially parallel relation to said input shaft;

a cluster gear rotatably mounted on said transfer shaft and driven by said first and second spur gears;

a plurality of range gears rotatably mounted on said transfer shaft;

a countershaft rotatably mounted in said housing in substantially parallel relation to said input shaft;

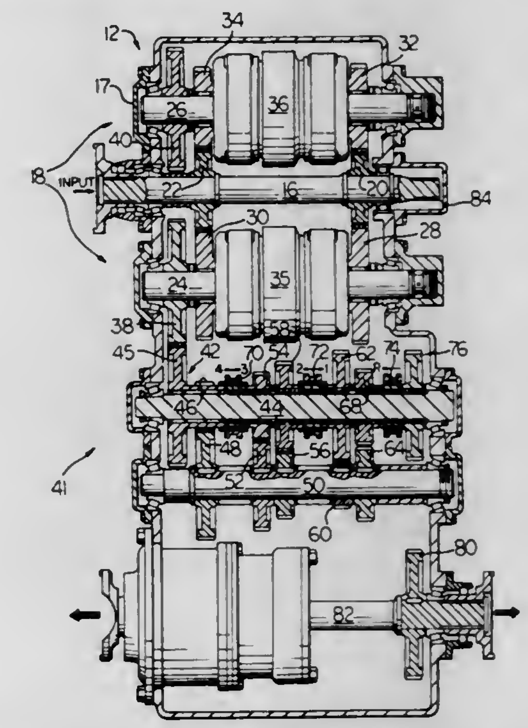

a countershaft drive gear drivingly mounted on said countershaft and drivingly engaging said cluster gear;

a plurality of countershaft spur gears drivingly mounted on said countershaft and each engaging a range gear;

a plurality of drive engagement means operable for selectively drivingly connecting said range gears to said transfer shaft;

transfer gear means interconnecting said transfer shaft with said output shaft for driving said output shaft.

4,063,465

MAGAZINE FEEDING MECHANISM FOR DUAL SLIDE PROJECTORS

Reinhard Sobotta, Mascherode, Germany, assignor to Rollei-Werke Franke & Heidecke, Braunschweig, Germany

Filed Sept. 17, 1976, Ser. No. 725,140

Claims priority, application Germany, Sept. 24, 1977, 2542484

Int. Cl.^{2} F16H *55/04, 21/40*

U.S. Cl. 74—436 **12 Claims**

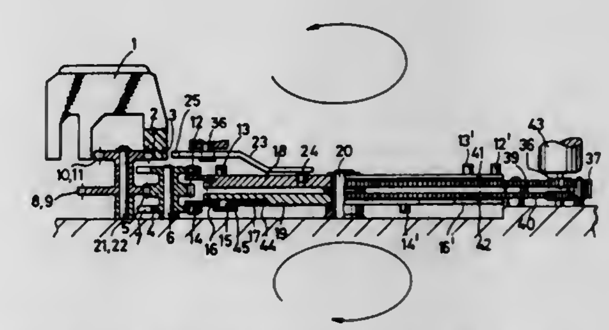

1. Magazine feeding mechanism for a dual slide projector wherein picture slides are to be taken in continuous succession from a single magazine and delivered alternately to two separate projection gates and then returned to the magazine in their original sequence, said feeding mechanism comprising

a. magazine feed pinion means meshing with rack teeth on a slide magazine and effective, upon rotation of the pinion means, to feed the magazine;

b. an indexing wheel operatively connected to said pinion

means to cause turning of said pinion means upon rotation of said indexing wheel;

c. a first indexing gear and a second indexing gear rotatably driven only during a slide change and rotatably driven simultaneously in opposite directions to the same angular extent during each slide change, said angular extent amounting to 360°/n where n is a positive integer greater than zero;

d. indexing means carried by each of said indexing gears for engaging with and causing rotation of said indexing wheel wheel during said simultaneous rotation of said indexing gears;

e. said indexing means carried by the first indexing gear being arranged for first turning said indexing wheel in one direction to one angular extent and said indexing means carried by the second indexing gear being arranged for subsequently turning said indexing wheel in the opposite direction to a different angular extent upon said simultaneous rotation of both indexing gears to the same angular extent.

4,063,466

SELF-ENERGIZING ANTI-RATTLE DEVICE

Dan Joseph Showalter, Muncie, Ind., assignor to Borg-Warner Corporation, Chicago, Ill.

Continuation-in-part of Ser. No. 643,731, Dec. 22, 1975, abandoned. This application Jan. 24, 1977, Ser. No. 761,935

Int. Cl.² F16F *15/12;* **F16D** *49/02*

U.S. Cl. 74—574 **6 Claims**

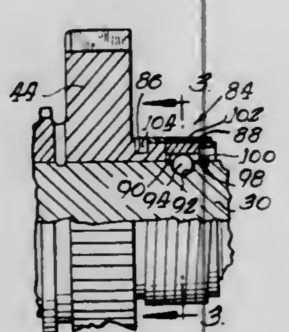

1. In combination, a rotatable shaft, first and second rotatable gears, said gears being engageable selectively with said shaft for rotation therewith in one direction of rotation respectively at a first relatively slow speed and a second relatively high speed, a wire spring engaged with said first gear for rotation therewith, and a sleeve supported on said shaft by a lost motion connection allowing slight relative rotation therebetween, said wire spring being coiled around said sleeve for establishing frictional engagement therewith, said wire spring being coiled so as to loosen in response to engagement of said second gear with said shaft, thereby decreasing said frictional engagement.

4,063,467

SPEED CHANGE AND REVERSER DEVICE

Erwin F'Geppert, Novi, Mich., assignor to The United States of America as represented by the Secretary of the Army, Washington, D.C.

Filed June 9, 1976, Ser. No. 694,511

Int. Cl.² F16H *55/52*

U.S. Cl. 74—689 **2 Claims**

1. A speed changer comprising a rotatable shaft (10) defining a sun axis; first and second sun pulleys encircling said shaft; the first sun pulley being stationary, and the second sun pulley being rotatable independently of the shaft;

the first sun pulley comprising a first stationary half section (14), and a second facing half section (16) keyed thereon for axial adjustment; the second sun pulley comprising a third half section (46) swivably connected to the second half section, and a facing fourth half section (50) swivably mounted on the shaft;

the second and third half sections being located between the first and fourth half sections, whereby axial adjustment of the second half section (16) serves to inversely vary the effective diameters of the two sun pulleys;

a planet pulley carrier (24) affixed to said shaft and extending radially outwardly therefrom; third and fourth planet pulleys rotatably arranged on the carrier for orbital movement around the sun axis;

said third planet pulley being radially aligned with the first sun pulley, and said fourth planet pulley being radially aligned with the second sun pulley;

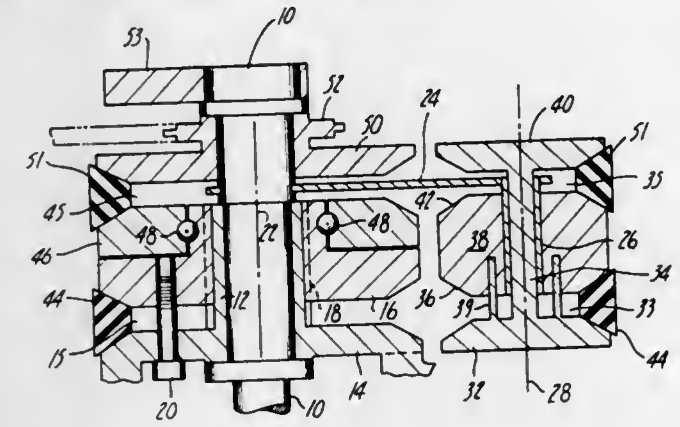

said planet pulleys being comprised of a spool (34) and roller (38); the spool including two facing end flanges (32) and (40), and the roller being slidably keyed on the spool for axial movement in the space between the end flanges; the spacing between the end flanges being greater than the axial dimension of the roller whereby axial adjustment of the roller serves to inversely vary the effective diameters of the two planet pulleys;

a first V-belt (44) trained around the first sun pulley and third planet pulley, and a second V-belt (51) trained around the second sun pulley and fourth planet pulley.

4,063,468

CHANGE-SPEED GEAR SYSTEM FOR USE IN AUTOMATIC TRANSMISSIONS

Kojiro Kuramochi; Kazuaki Watanabe, and Kiyoshi Onuma, all of Toyota, Japan, assignors to Toyota Jidosha Kogyo Kabushiki Kaisha, Toyota, Japan

Filed Apr. 15, 1976, Ser. No. 677,372

Int. Cl.² F16H *57/10*

U.S. Cl. 74—763 **9 Claims**

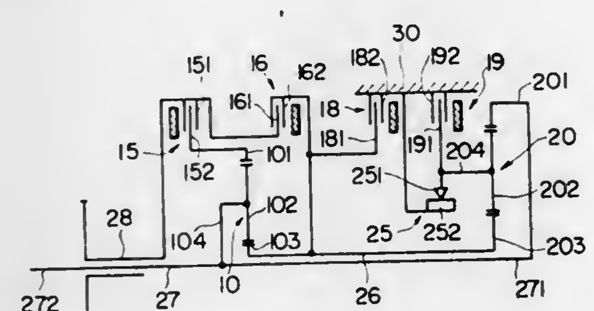

1. A change-speed gear system for use in an automatic transmission comprising:

a. a center output shaft having actuating opposite ends;

b. a hollow input shaft coaxially disposed around one end of said output shaft;

c. a hollow intermediate shaft coaxially disposed around said output shaft;

d. first and second planetary gear mechanisms, each mechanism including a sun gear, a ring gear, a planetary pinion meshing with said sun gear and said ring gear, and a planetary carrier rotatably supporting said planetary pinion, said sun gears being secured to said intermediate shaft, and said planetary carrier and said ring gear, respectively, of said first and second planetary gear mechanisms being secured to said output shaft;

e. first and second selectively actuatable clutch means between which is positioned said first planetary gear mechanism, each clutch means having a drivable portion and a driving portion engageable with said drivable portion, said driving portions of said clutch means being coupled to said input shaft and said drivable portions of said first and second clutch means being respectively coupled to said ring gear to said first planetary gear mechanism and to said intermediate shaft; and

f. first and second selectively actuatable brake means, each brake means having a non-movable portion and a movable portion engageable with said non-movable portion, said movable portions of said first and second brake means respectively coupled to said intermediate shaft and to said planetary carrier of said second planetary gear mechanism; and

wherein selective actuation of said first and second clutch means and said first and second brake means establishes three forward-speed gear ratios and one reverse-speed gear ratio.

4,063,469

MULTIPLE SPEED HUB FOR A VEHICLE WHEEL

Eduard Bergles, Graz, Austria, assignor to Fichtel & Sachs AG, Schweinfurt am Main, Germany

Filed July 16, 1976, Ser. No. 706,060

Claims priority, application Germany, July 25, 1975, 2533308

Int. Cl.² F16H *57/10;* **F16D** *67/00*

U.S. Cl. 74—781 B **6 Claims**

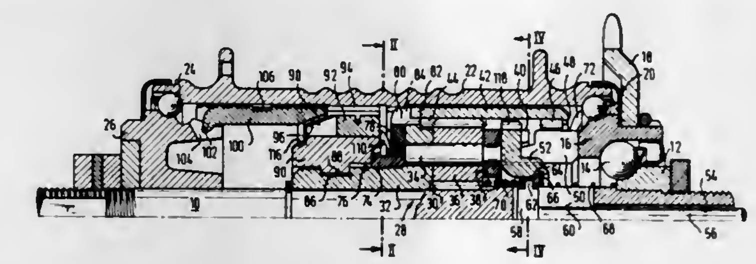

1. A multiple speed hub for a bicycle and like vehicle comprising:

a. a shaft having an axis;

b. a driver member rotatable on said shaft about said axis;

c. a hub shell having two axial end portions rotatably mounted on said driver member and said shaft respectively;

d. a planetary gear transmission in said hub shell including a sun gear fixedly secured to said shaft, an internally toothed ring gear and a planet carrier rotatable about said axis, a planet gear rotatable on said carrier in simultaneous meshing engagement with said ring gear and said sun gear;

e. first overrunning clutch means drivingly interposed between said ring gear and said hub shell;

f. second overrunning clutch means drivingly interposed between said planet carrier and said hub shell;

g. a coupling member permanently connected to said drive member for joint rotation about said axis and including first and second driving portions;

h. first and second axially offset engagement means on said ring gear and said planet carrier respectively;

i. shifting means for axially shifting said coupling member between a first position of torque transmitting engagement of said first driving portion with said first engagement means and a second position of torque transmitting engagement of said second driving portion with said second engagement means,

1. said shifting means including a slide member mounted on said shaft, manual operating means for axially moving said slide member relative to said shaft, and yieldably resilient connecting means operatively interposed between said slide member and said coupling member and biasing said coupling member to move axially with said slide member,

2. the axial spacing of said first and second engagement means being smaller than the axial dimension of said coupling member measured over said driving portions,

3. one of said engagment means including an engagement member projecting axially from said planet carrier toward said coupling member,

4. said engagement member having a cam face obliquely inclined relative to said axis and cammingly cooperating with said second driving portion of said coupling member in said intermediate position of the coupling member for shifting said coupling member toward the other engagement means against the restraint of said connecting means in an intermediate position of simultaneous torque transmitting engagement of said coupling member with said first and second engagement means.

4,063,470

COMPACT PLANETARY GEAR ASSEMBLY

Donald William Kelbel, Muncie, Ind., assignor to Borg-Warner Corporation, Chicago, Ill.

Filed Sept. 10, 1976, Ser. No. 722,238

Int. Cl.² F16H *57/10;* **F16D** *67/02*

U.S. Cl. 74—785 **12 Claims**

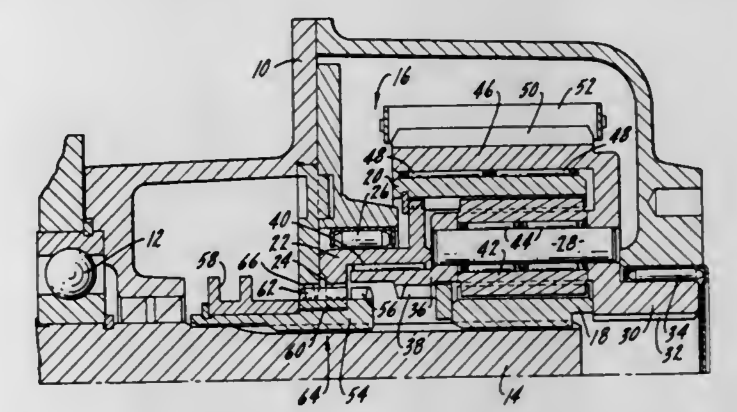

1. A planetary gear assembly comprising a rotatable member, a sun gear secured to said member, a carrier, a ring gear, a plurality of planet gears journaled on said carrier in mesh with said sun and ring gears, and means for establishing a plurality of operating supported by said sleeve, said means being movable to a first position wherein said ring gear is grounded through said collar, and to a second position wherein said member and carrier are engaged through said sleeve, said collar being engaged with said ring gear in both positions.

4,063,471

METHOD OF GRINDING THE TEETH OF A CIRCULAR SAW TO AN IMPROVED CONTOUR

Robert H. Nowak, Mentor, Ohio, assignor to The Motch & Merryweather Machinery Company, Cleveland, Ohio

Division of Ser. No. 697,288, June 17, 1976, Pat. No. 4,069,880, which is a continuation-in-part of Ser. No. 587,504, June 16, 1975, Pat. No. 4,012,820. This application Dec. 20, 1976, Ser. No. 751,572

Int. Cl.² B23D *63/14;* **B24B** *3/40*

U.S. Cl. 76—112 **2 Claims**

1. A method for automatically point grinding the teeth of a circular saw to an improved contour, said method comprising the steps of:

securing said circular saw in a relatively immobile fashion;

advancing the abrasive rim of a cup-shaped grinding wheel into grinding contact with one tooth of said circular saw;

grinding a portion of the face of said tooth to a substantially

elliptical contour at a more negative average rake angle than the remaining portion of the face of said tooth; and,

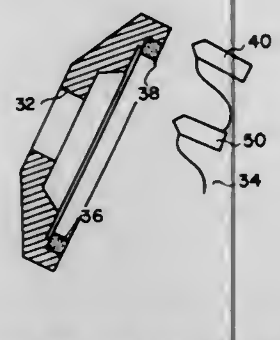

withdrawing grinding cup-shaped wheel from the vicinity of said tooth.

4,063,472
REMOTELY ACTUATABLE DEVICE FOR ROTARY KNOB

Robert W. MacIntyre, 103 Grove St., Concord, Mass. 01742, and Edward J. Wysocki, 5 Radford Place, Hyde Park, Mass. 02136
Filed Sept. 23, 1976, Ser. No. 725,709
Int. Cl.² B25B *13/48*
U.S. Cl. 81—3 R **2 Claims**

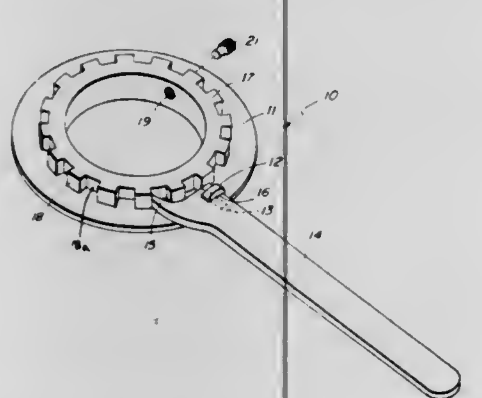

2. A remotely actuatable device for controlling a rotary knob (20) or the like, comprising:
a. an annular toothed member (17) having notches (18*a*) and adapted to be fitted over and attached to such a knob (20);
b. an annular plate (11) adjacent said toothed member (17) and movable with respect thereto;
c. a loop (12) rotatably positioned on said plate;
d. a handle member (14) having a toothed end (15) and a transverse slot (16) positioned so that said loop extends into said slot; and
e. a pin (13) extending across said slot (16) through said loop (12) so as to form a pivotal connection between said handle (14) and said plate (11);
said device being characterized in that said handle toothed end (15) is engagable with a notch (18*a*) so that when said handle is moved in one direction said toothed member is moved in the same direction; said handle being pivotable so as to be engagable with a notch (18*a*) on the opposite side of said loop as to permit motion in the opposite direction by actuation of the handle.

4,063,473
METHOD OF ASSEMBLYING MECHANICAL CORK PULLER

George J. Bozzo, New Milford, N.J., assignor to Irvinware Division of Beatrice Foods Company, Astoria, N.Y.
Filed Jan. 9, 1976, Ser. No. 647,784
Int. Cl.² B67B *7/32*
U.S. Cl. 81—3.37 **4 Claims**

1. In a mechanical cork puller having a main body portion including a circular base member adapted to rest upon the top rim of a corked bottle neck and strut means extending upwardly therefrom connected to a pair of opposed support ears extending generally laterally from opposite sides of a central tubular housing, a lever arm mounted for pivotal movement between each of said pairs of opposed support ears about a pivot hole formed therein including a toothed sector extending about the aforesaid pivot hole, and a cork puller shaft telescopically slidably received within said tubular housing including a worm portion adapted to be embedded in said cork and a screw portion comprising a plurality of spaced parallel grooves extending circumferentially about the shaft and in

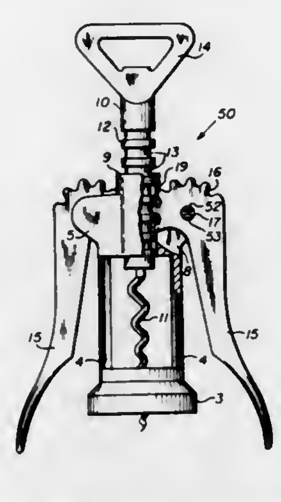

meshed engagement with the toothed sectors of the lever arms, the improvement therein which comprises:
pivot means provided on the opposed inner surfaces of each of said pairs of supporting ears for mounting said lever arms for said pivotal movement which is not visible on the outer surfaces of said support ears,
wherein said pivot means comprises a pair of spaced parallel rib members adapted to closely fit within the pivot hole fo said lever arm.

4,063,474
TORQUE LIMITING SCREWDRIVER

Norman Conrad Klopping, Elmhurst, Ill., assignor to Dresser Industries, Inc., Dallas, Tex.
Filed Nov. 6, 1975, Ser. No. 629,451
Int. Cl.² B25D *23/142*
U.S. Cl. 81—52.4 R **4 Claims**

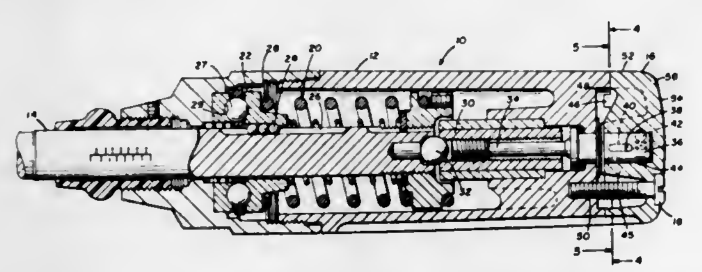

1. In an improved torque limiting screwdriver including a bit receptacle extending from one end of a generally cylindrical gripping means and rotatably adjustable torque limiting means operably connecting the bit receptacle with the gripping means, and the gripping means includes a plurality of radially spaced holes extending generally parallel to the bit receptacle, the improvement comprising a cap member arranged to be located at the other end of the gripping means and having:
an exterior wall portion generally conforming to the gripping means;
an exterior end portion providing an essentially smooth surface;
a surface portion smoothly connecting said wall and end portions;
a connection portion located interiorly of said wall portion connected for rotation with the torque limiting means, whereby rotation of said cap member relatively to the gripping means adjusts the torque limit of said screwdriver while said cap member prevents discomfort to the user of said screwdriver when force is applied thereto;

a hole through said end portion aligned with the holes in the gripping means; and
releasable fastening means located in the hole in said cap member and arranged to be located in one of the holes in the gripping member to prevent inadvertent rotation of the cap member relative to the gripping means and releasable therefrom to permit relative rotation therebetween to adjust the torque limit.

4,063,475
LUG NUT TOOL

Robert L. Perkins, 858 N. 96th St., Mesa, Ariz. 85207
Filed Dec. 17, 1975, Ser. No. 641,612
Int. Cl.² B25B *17/00*
U.S. Cl. 81—57.22 **2 Claims**

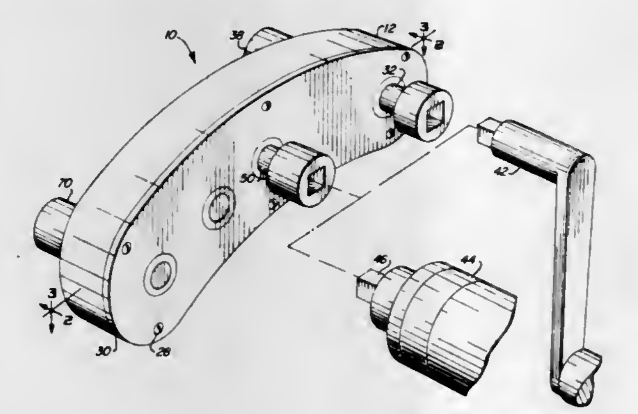

1. A lug wrench for loosening or tightening lug nuts which secure a vehicle wheel in place, said wrench comprising:
a. a casing having a curved configuration generally conforming to the wheel upon which it is to be used;
b. a drive shaft rotatably mounted in said casing having an end adapted to cooperate with drive means;
c. a driven shaft having an end adapted to detachably secure sockets thereon for engaging a first lug nut on the wheel;
d. a gear transmission interconnecting said drive and driven shafts, said transmission driving said driven shaft in the same rotational direction as the driving shaft, said transmission having intermeshing gears relatively sized to develop increased torque across said transmission; and
e. a spindle shaft rotatively mounted in said housing and having one end adapted to detachably receive a socket and said spindle shaft being spaced from said driven shaft and positioned for a socket received thereon to engage a second lug nut on the wheel, the opposite end of said spindle shaft being adapted to be rotated by a driving tool, said spindle being rotative independent of said drive shaft whereby said lug wrench can be engaged with two lug nuts on the same wheel a loose nut can be removed at said spindle shaft.

4,063,476
METHOD AND APPARATUS FOR CUTTING A CONTINUOUSLY MOVING WEB

Lennart Edström, Grodinge, Sweden, assignor to Aktiebolaget Broderne Herrmann, Stockholm, Sweden
Filed Apr. 13, 1976, Ser. No. 676,381
Claims priority, application Sweden, Apr. 29, 1975, 7504997
Int. Cl.² B23D *25/04*
U.S. Cl. 83—37 **13 Claims**

1. A method of cutting a web during its continuous movement, which comprises
passing the web over a roll having a longitudinal axis,
pressing against the roll and therewith against the web a freely rotatable circular cutter freely movable, along the longitudinal axis of the roll, across the web at an angle in relation to the longitudinal axis of the roll,
moving said circular cutter across the web, said movement being effected only by the diagonal orientation of the

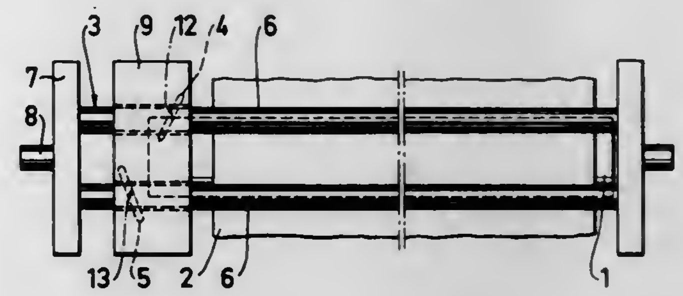

cutter to the web and by the continuous movement of the web.

4,063,477
APPARATUS AND METHOD FOR CUTTING CARPET

Helmut Hantke, South Pasadena, Calif., assignor to Apex Pattern Company, Los Angeles, Calif.
Filed Aug. 20, 1976, Ser. No. 716,336
Int. Cl.² B26F *1/44;* **B26D** *3/00*
U.S. Cl. 83—40 **7 Claims**

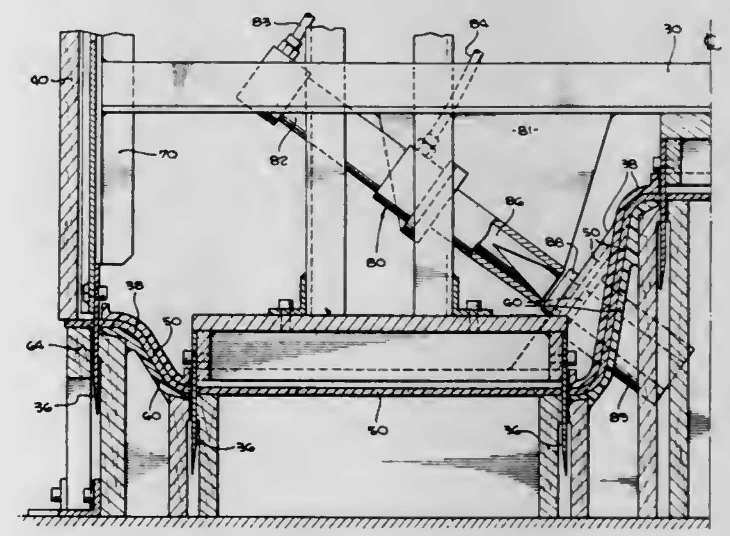

1. In an apparatus for cutting a carpet or the like to pattern, having bottom support means, top pressing means, and cutting means, wherein the improvement comprises:
said bottom support means being adapted for supporting a pre-shaped carpet which is to be cut along pattern lines which extend in both the vertical and horizontal directions, said bottom support means having a top surface whose edges conform to the pattern lines of the carpet and whose top surface shape conforms to the shape of the bottom of the carpet;
said top pressing means being adapted for exerting pressure upon the top of the pre-shaped carpet during the cutting operation, said means having a bottom surface whose shape conforms to the shape of the top of the carpet; and
said cutting means having a cutting edge which is adapted for initially piercing the carpet at a plurality of spaced points along the pattern lines and which cutting edge will progressively cut the carpet from each pierced point along both directions of the pattern line until the carpet is cut.

5. In a method for cutting a pre-shaped workpiece to pattern along pattern lines which extend in both the vertical and horizontal directions comprising:
supporting said workpiece upon a bottom support member having a top surface whose edges conform to the pattern lines and whose top surface shape conforms to the shape of the bottom of the workpiece;
applying pressure to the top of the workpiece with a top pressing member having a bottom surface whose shape conforms to the shape of the top of the workpiece; then

piercing the workpiece at a plurality of spaced points along the pattern lines; and

cutting said workpiece to pattern by progressively cutting said workpiece from each point of piercing in both directions along the pattern line until the workpiece is cut.

4,063,478
SAW ENCLOSURE CONSTRUCTION
Hans Stuy, Canastota, N.Y., assignor to Diebold Incorporated, Canton, Ohio
Filed Oct. 20, 1976, Ser. No. 734,023
Int. Cl.² B27B *5/29*
U.S. Cl. 83—100 **9 Claims**

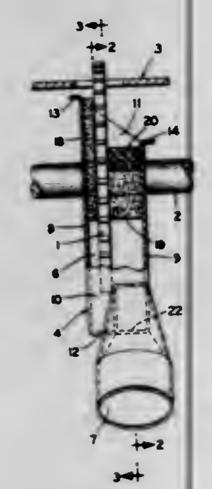

1. In saw enclosure construction for removing sawdust from the teeth of a rotary table saw; a housing having first and second side walls, end walls and a bottom wall forming an enclosure chamber open at the top adapted to be telescoped over a saw blade carried by a rotor shaft beneath a work table through which the saw blade projects upwardly to saw a work piece supported on the table; the housing when in saw enclosure position having the first side wall located parallel with and close to one saw blade face to form a narrow chamber portion, and having the second side wall located a greater distance from the other saw blade face to form a wide chamber portion; means sealing the wide chamber portion against the direct entry of exterior air thereinto on the wide chamber portion side of the saw blade; suction means connected with the chamber; inlet port means for the chamber connected with the narrow chamber portion at the top of the housing; and air currents induced in the inlet port means by the suction means flowing at high velocity through the narrow chamber portion and through the teeth of a rapidly rotating saw blade to enter the wide chamber portion from which the air currents are exhausted by the suction means.

4,063,479
STRAND CUTTING APPARATUS
Giordano Roncato, Aix-les-Bains, France, assignor to Saint-Gobain Industries, Neuilly-sur-Seine, France
Filed Sept. 2, 1976, Ser. No. 719,916
Claims priority, application France, Sept. 4, 1975, 75.27084
Int. Cl.² D01G *1/04*
U.S. Cl. 83—117 **11 Claims**

1. Apparatus for cutting continuous lengths of filamentary material into segments comprising a support means for supporting the material to be cut, a drum, a plurality of cutting blades disposed on the drum and extending outwardly therefrom, means mounting the drum for rotation adjacent the support means, the cutting edges of the cutting blades being successively brought to a cutting zone formed in conjunction with the support means for cutting material in the cutting zone, elongate ejector members disposed in spaces between cutting blades for compressing the material against the support means when the material is in the cutting zone and for ejecting the cut segments of material from the drum when the material has passed the cutting zone, and resilient, yieldable ejector mount-

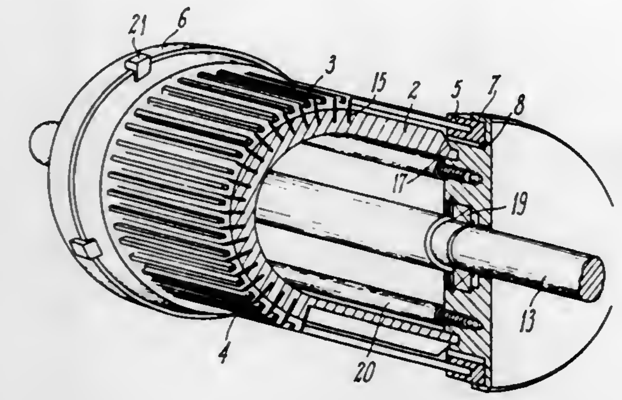

ing means formed of an elastomeric material for mounting the ends of the ejector members on the drum.

4,063,480
APPARATUS FOR SEVERING ROD-SHAPED SMOKERS' PRODUCTS
Alfred Hinzmann, Richmond, Va., assignor to Hauni-Werke Korber & Co., KG, Hamburg, Germany
Filed Apr. 30, 1976, Ser. No. 681,909
Int. Cl.² B26D *7/14, 7/06;* **A24C** *5/50*
U.S. Cl. 83—176 **15 Claims**

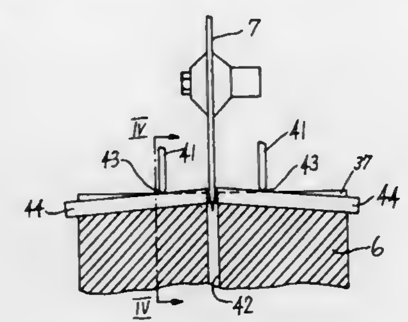

1. Severing apparatus for at least slightly flexible rod-shaped articles, particularly for portions of filter rods or analogous articles which constitute or form part of smokers' products, comprising a conveyor having article-receiving means arranged to accept and to move a succession of rod-shaped articles in a predetermined direction sideways toward, past and beyond a cutting station; knife means provided at said station and extending into a portion of the path of movement of successive articles in said receiving means to thus subdivide the articles into shorter rod-shaped sections during movement of articles past said station; and means for flexing the articles in said receiving means, at least while the articles move past said station, to thus promote the severing action of said knife means by applying a tensional stress to such parts of successive articles which move along said portion of said path.

4,063,481
ROTARY CUTTING DEVICE
Vytas Andrew Raudys, and Ronald Robert DeVitto, both of Chicago, Ill., assignors to Union Carbide Corporation, New York, N.Y.
Filed Oct. 12, 1976, Ser. No. 731,632
Int. Cl.² B26D *7/00*
U.S. Cl. 83—199 **1 Claim**

1. A rotary severing device comprising a substantially cylindrical guide post having a slot tapered extended transversely through said post with the longitudinal first opening of said slot defined at one surface of the guide post and being wider than the longitudinal second opening of said slot defined at a second surface spaced apart from said first surface; a hollow substantially cylindrical knife coaxially mounted about said guide post and having a first longitudinal slot disposed in

alignment with the first opening of the slot in the guide post, a second longitudinal slot disposed adjacent to and in alignment with the second opening of the slot in the guide post, said first slot in the substantially cylindrical knife being wider than the width of the second slot so as to facilitate the guidance of

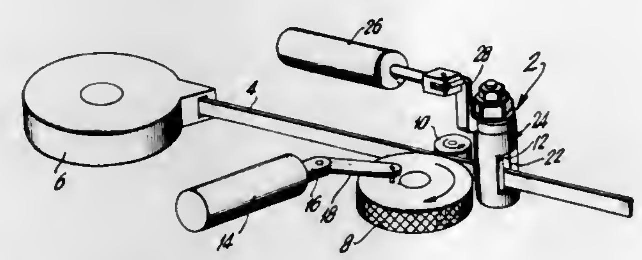

material to be cut through the tapered slot, and at least one of said longitudinal edges defining said second longitudinal slot in the cylindrical knife being a cutting edge; and wherein the cylindrical knife or guide post is rotatable so that at least one cutting edge of the cylindrical knife is adapted for relative movement over the second opening in the guide post.

4,063,482
MACHINE TOOL INDEXING MECHANISM
Anthony Reginald Pizzey, and Alan James Waters, both of Ipswich, England, assignors to Caplin Engineering Company Limited, Ipswich, England
Filed Aug. 2, 1976, Ser. No. 710,867
Claims priority, application United Kingdom, Aug. 4, 1975, 32584/75
Int. Cl.² B26D *5/20, 7/06*
U.S. Cl. 83—207 **18 Claims**

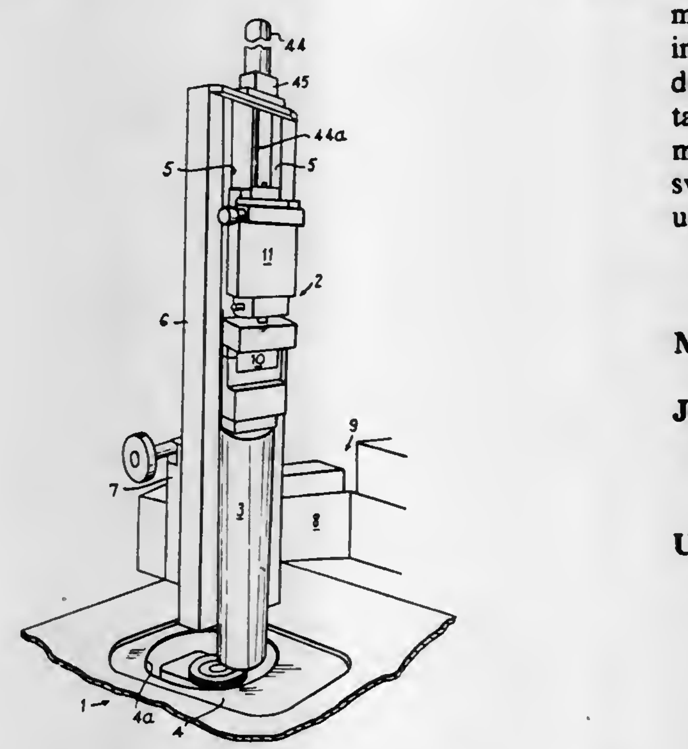

1. An indexing mechanism of the type operable to effect repeated stepwise advance between a workpiece and a work station of a machine tool by an indexing stroke of predetermined length, comprising first and second displaceable members interconnected for displacement, in turn, alternately toward and away from each other, the extent of said displacement determining the indexing stroke of the mechanism, means to adust the extent of the indexing stroke, and means operable to selectively immobilise each displaceable member during displacement of the other, said selective immobilising means comprising primary clamp means operable to positively and releasably clamp the first and second displaceable members to guide means of a machine tool, and a secondary clamp means operable, upon release of the primary clamp means, to clamp the displaceable members to the guide means with a reduced clamping force sufficient to resist unintentional displacement of the displaceable members.

4,063,483
APPARATUS FOR SEVERING BILLETS
Toshiro Kawaguchi, Yamaguchi; Setuo Fujii, and Katsuhiko Matsui, Ube, both of Japan, assignors to Ube Industries, Ltd., Ube, Japan
Filed Jan. 25, 1977, Ser. No. 772,262
Claims priority, application Japan, Feb. 27, 1976, 51-20115
Int. Cl.² B26D *1/04*
U.S. Cl. 83—382 **7 Claims**

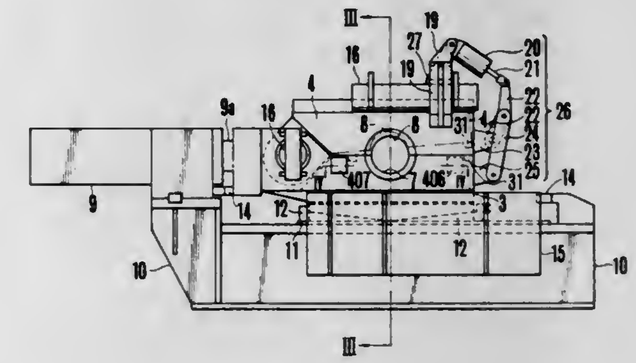

1. Billet severing apparatus comprising a horizontal frame; a first pair of a lower stationary die and an upper swinging die, each being provided with a semicircular recess for receiving a billet; a second pair of a lower movable die and an upper movable and swinging die, each being provided with a semicircular recess for receiving the billet; said first and second pairs being juxtaposed in the axial direction of said recesses; said second pair being slidable with respect to said first pair in the horizontal direction perpendicular to the axial direction of said recesses; said upper swinging die of the first pair and said upper movable and swinging die of the second pair being swingable in the vertical direction with respect to said lower stationary die and said lower movable die; means secured to said horizontal frame for sliding the lower movable die and the upper movable and swinging die of said second pair; and means for swinging said upper swinging die of the first pair and said upper movable and swinging die of the second pair.

4,063,484
METHOD AND APPARATUS FOR GENERATING TONE SIGNALS FOR A MUSICAL INSTRUMENT
John William Robinson, Jasper, Ind., assignor to Kimball International, Inc., Jasper, Ind.
Filed Oct. 20, 1975, Ser. No. 623,784
Int. Cl.² G10H *1/02*
U.S. Cl. 84—1.24 **18 Claims**

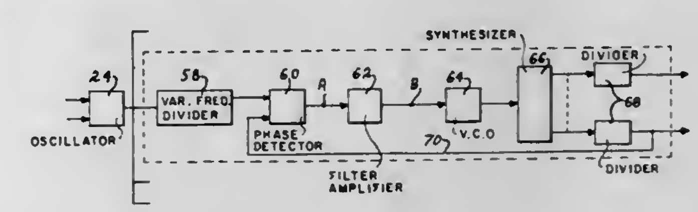

1. In an electronic organ having keyers adapted when actuated to key tone signals; and means for developing a range of tone frequencies for being keyed by said keyers comprising: a high frequency stable oscillator, a plurality of variable frequency dividers driven by the stable oscillator and each dividing the signal supplied thereto by a respective factor to produce sharp, flat, and normal frequencies at the respective divider outputs, a phase detector having one input connected to the output of each divider, a voltage controlled oscillator having one input connected to the output of each said phase detector, a synthesizer for each detector and having an input, means connecting the input of eacy synthesizer to the output of the respective voltage controlled oscillator, each synthesizer having a plurality of outputs at respective frequencies, means connecting one of the outputs of each synthesizer to the other

input of the respective phase detector, voice circuit means having control terminals connected to said keyers, and means for connecting the outputs of said synthesizers in selected groupings thereof to said voice circuits for the supply of tone signals of respective character thereto.

4,063,485
DECOY LAUNCHER SYSTEM
William M. Carter, Glendora; Robert W. Klauschie, Claremont, and George H. Schillreff, Glendora, all of Calif., assignors to General Dynamics Corporation, Pomona, Calif.
Filed Dec. 21, 1966, Ser. No. 603,498
Int. Cl.² F41F *3/00*
U.S. Cl. 89—1.816 **8 Claims**

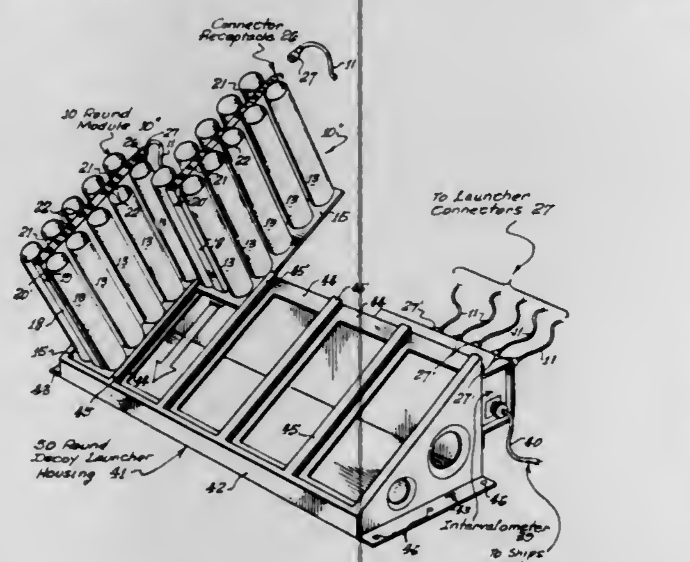

1. A launcher assembly comprising: a tube support plate means, a vertical support member fixedly attached at one end thereof to the upper surface of said tube support plate means and extending at substantially a right angle therefrom, a plurality of tubes mounted in a plurality of rows upon said tube support plate means and extending upward along said vertical support member, at least one of said rows being adjacent at least one of the opposing sides of said vertical support member, said tubes functioning for storage of associated rounds and as the launch base for firing of associated rounds, electrical harness assembly means secured to said vertical support member at the end thereof opposite said tube support plate means and adapted for connection with associated rounds, an angularly configured base assembly, said tube support plate means being mounted on said base assembly so as to position said tube support plate means at an angle with respect to a vertical axis of said base assembly, said base assembly including base plate means and angularly configured plate means fixedly attached to said base plate means and to the lower surface of said tube support plate means, said base plate means additionally including a portion adapted for securing same to a fixed support.

4,063,486
LIQUID PROPELLANT WEAPON SYSTEM
Eugene Ashley, Burlington, Vt., assignor to General Electric Company, Burlington, Vt.
Continuation of Ser. No. 469,507, May 13, 1974, abandoned. This application July 20, 1976, Ser. No. 707,144
Int. Cl.² F41F *1/04*
U.S. Cl. 89—7 **39 Claims**

14. A fixed round of ammunition comprising:
a cartridge case having a side wall defining a tube;
a base, having a relatively low mass, closing the aft end of said tube, and having an interior forward face and an exterior aft face,
a gas generating means communicating with said aft face of said base,
a projectile means, having a relatively high mass, disposed at least in part within said tube and obturating the forward end of said tube
said base serving as a differential piston means movable along said tube towards said projectile means, and its aft face having a relatively large cross-sectional area and its forward face having a relatively small cross-sectional area,
said base having a passageway therethrough communicating between said aft and forward faces of said base, and

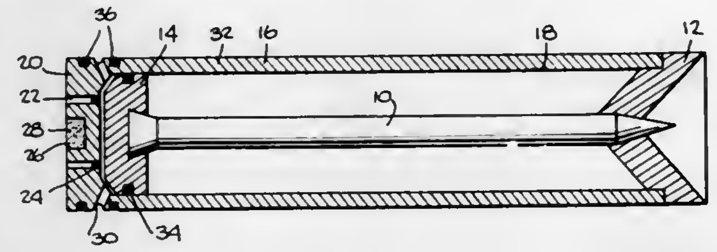

pressure sensitive obturating means for obturating said passageway and for opening said passageway upon a predetermined pressure being provided on said forward face of said base.

4,063,487
AUTOMATIC FIRING WEAPON
Jacques Pier-Amory, Chatelaine, Switzerland, assignor to Werkzeugmaschinenfabrik Oerlikon-Buhrle AG, Zurich, Switzerland
Continuation of Ser. No. 487,449, July 11, 1974, abandoned. This application July 30, 1976, Ser. No. 710,275
Claims priority, application Switzerland, July 18, 1973, 10532/73
Int. Cl.² F41D *11/08*
U.S. Cl. 89—130 **7 Claims**

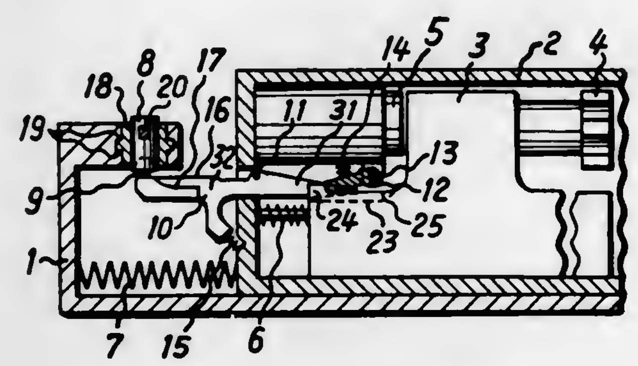

1. An automatic firing weapon comprising a support, a weapon housing displaceable relative to said support and cooperating therewith, a breechblock displaceable in the weapon housing, a pawl, means for pivotably mounting the pawl at the weapon housing, the breechblock being movable between a forward and a rearward position, said breechblock being arrested in its rearward position by said pawl which is pivotably mounted at the weapon housing, an actuation lever, means for movable mounting said actuation lever, the pawl being rocked by the actuation lever for releasing the breechblock, a trigger mechanism arranged at the support, a guide track for triggering series firing, a further substantially curve-shaped guide track for triggering rapid individual firing, said further guide track rocking the pawl during the return movement of the weapon housing into the path of the breechblock and during the forward movement of the weapon housing rocking such pawl out of such path, said guide track for triggering series firing and said further substantially curve-shaped guide track for triggering rapid individual firing are positioned to extend in the lengthwise direction of said weapon housing, and said guide track for triggering series firing and said further substantially curve-shaped guide track for triggering rapid individual firing are arranged along side one another, a switching mechanism, said trigger mechanism being operatively connected with said pawl via said switching mechanism selectively through the agency of one of both guide tracks and via the actuation lever.

4,063,488
TOOL CHUCK
Franz Kagerer, Munich, Germany, assignor to Friedrich Deckel Aktiengesellschaft, Munich, Germany
Filed Feb. 7, 1977, Ser. No. 766,555
Claims priority, application Germany, Feb. 17, 1976, 2606215
Int. Cl.² B23C *5/26*
U.S. Cl. 90—11 D **5 Claims**

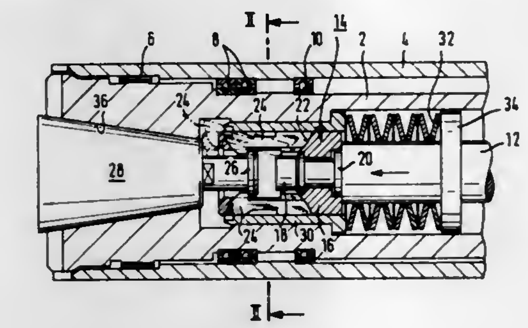

1. A tool chuck provided with a draw-in rod axially movably located inside a tool spindle and attached to a locking head which is positively engageable with the tang of a tool, and which comprises locking members movably contained in radial openings in the wall of the locking head and adapted to be pushed by a control sleeve embracing the locking head into recesses in the tang of the tool, said locking members having the form of sliding members which are substantially radially movable in suitably contrived ways, comprising the improvement wherein the locking members have the basic shape of circular segments each located with its circularly arcuate edge facing radially inwards, part of said edge being slidable in slots on faces of complementary shape and at least part being adapted to engage the tang at the end of the tool shank.

4,063,489
AUTOMATIC HYDRAULIC SHUT-OFF SYSTEM
Donald James Parquet, and Carl Oluf Pedersen, both of Burlington, Iowa, assignors to J. I. Case Company, Racine, Wis.
Filed Mar. 31, 1976, Ser. No. 672,133
Int. Cl.² F15B *11/08, 13/042*
U.S. Cl. 91—445 **4 Claims**

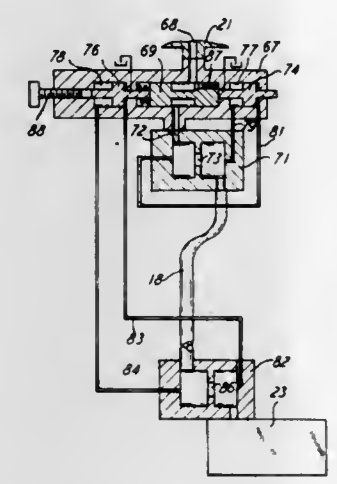

1. In an automatic hydraulic shut-off system having a hydraulic valve unit, a hydraulic responsive apparatus for applying a mechanical force in response to hydraulic pressure applied to said apparatus, and a hydraulic line connected between said valve unit and said apparatus, the impovement comprising a valve housing hydraulically connected with said hydraulic line and having a fluid passageway therein and a valve closure movably disposed therein for opening and closing said passageway and thereby controlling the flow of fluid in said hydraulic line, a differential pressure valve closure actuator at each end of said valve housing, two hydraulic flow sensors hydraulically connected with said hydraulic line in spaced-apart positions along said hydraulic line for receiving the flow of fluid between said valve housing and said valve unit, said sensors each having a restricted fluid-flow passageway and chambers at opposite ends of said passageways of said sensors for receiving all of the flow between said valve housing and said valve unit, and connecting fluid lines connected between said chambers of each of said sensors and a respective said valve closure actuator at opposite ends of said valve housing for moving said valve closure in said valve housing in response to an unbalance of fluid flow through said restricted fluid-flow passageways of said sensors to thereby have said valve closure close said valve housing passageway.

4,063,490
RACK AND PINION POWER STEERING GEAR MECHANISM
James J. Duffy, Livonia, Mich., assignor to Ford Motor Company, Dearborn, Mich.
Continuation-in-part of Ser. No. 505,884, Sept. 13, 1974, abandoned. This application Feb. 9, 1976, Ser. No. 656,682
Int. Cl.² F15B *13/04*
U.S. Cl. 91—467 **4 Claims**

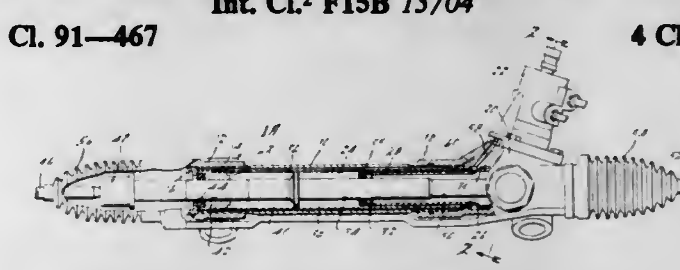

1. A power rack and pinion assembly for a vehicle steering linkage comprising a power cylinder, a power piston rod positioned within said power cylinder, a piston carried on said piston rod and defining on either side thereof opposed pressure chambers in said power cylinder, an inner sleeve concentrically disposed within said power cylinder, an outer sleeve surrounding said power cylinder and defining therebetween an annular pressure passage, a steering gear housing supporting one end of said power cylinder and one end of said inner sleeve, an annular bushing supported at the other end of said power cylinder, means mounting said bushing for radial movement relative to said outer sleeve, means mounting said bushing for axial movement relative to said power cylinder, said piston rod slidably registering with the opening in said bushing thereby providing a first support bearing point, a seal and bushing assembly at the other end of said inner sleeve in the interior of said power cylinder, said seal and bushing assembly being piloted on said piston rod and having a radial clearance relative to said power cylinder, means mounting said one end of said inner sleeve on said housing for angular movement relative thereto whereby slight tolerances and misalignments of the center lines of said piston rod and said inner sleeve may be accommodated while maintaining uniform sliding bearing contact for said bushing and said seal and bushing assembly with said piston rod, said steering gear housing including a pair of pressure passages, one pressure chamber on one side of said piston communicating with one pressure passage through said annular pressure passage and the other passage communicating with the other pressure chamber on the other side of said piston through the annular space defined by said inner sleeve and said power cylinder, a rotatable steering shaft journalled in said housing, a pressure port and an exhaust port in said housing, valve means in said housing responsive to movement of said steering shaft for controlling distribution of pressure from said pressure port to either of said pressure passages and for controlling communication between said pressure passages and said exhaust port.

4,063,491

DEVICE FOR DISCONTINUING AND AUTOMATICALLY RESTORING THE OPERATIONAL FUNCTION OF A SPRING BRAKE ACTUATOR

Michel Roger, Ville d'Avray, France; Nils Borje Lennart Sander, and Bo Ivar Jonny Brundin, both of Malmo, Sweden, assignors to Svenska Aktiebolaget Bromsregulator, Malmo, Sweden

Filed Feb. 27, 1976, Ser. No. 662,272

Claims priority, application Sweden, Mar. 3, 1975, 7502325

Int. Cl.² F01B *7/00;* **F16J** *1/10*

U.S. Cl. 92—130 A **5 Claims**

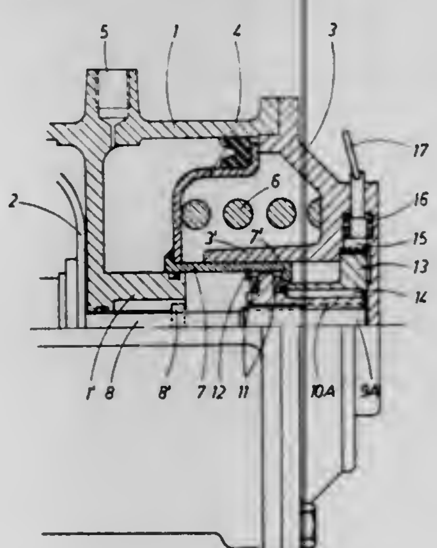

1. A spring brake actuator for a brake system having a spring holding a braking piston in a braking position, comprising in combination, a cylinder, a piston rod movable to actuate said braking piston in braking and release directions, a fluid responsive piston movable in said cylinder in one direction for overcoming said spring by fluid pressure to release the braking piston, said spring actuating the piston in an opposite direction for braking at falling of said fluid pressure, a non-rotatable threaded member movable with the piston rod, means including a first rotatable member coaxial with the piston coupling the piston rod to the piston for movement by said piston, a second rotatable member coaxial with the piston rod connected for simultaneous rotation with said first member, said first rotatable member in non-self locking thread engagement with said non-rotatable member, manually releasable lock means locking to the cylinder the second one of said rotatable members in its direction of rotation by said thread engagement caused by the spring when actuating the braking piston in the braking direction wherein the second rotatable member is connected to the first rotatable member in a way only allowing relative axial movements therebetween and means holding one of said rotatable members axially immovably arranged in the cylinder, said lock means comprising a plunger mounted in the cylinder and spring-biassed means holding the plunger into engagement with the second rotatable member.

4,063,492

SHIPPING CARTON ERECTOR AND HOLDER

Arthur Lesek, Nashua, N.H., assignor to H. W. Stark Co., Inc., Milwaukee, Wis.

Filed July 21, 1976, Ser. No. 707,173

Int. Cl.² B31B *5/02*

U.S. Cl. 93—49 R **13 Claims**

1. An erector and holder for a shipping carton having first and second pairs of closure flaps comprising a frame, an elongated rail mounted on said frame, said rail having a carton supporting surface and having a discharge end, means on said frame for holding an opened-out carton blank in a predetermined upright position with the edges of said first pair of flaps resting on said rail, means for folding said first pair of flaps inwardly toward one another on top of said carton supporting surface to allow the carton to descend to a position where said rail is between the second pair of flaps, and means adjacent opposite sides of said rail and movable toward said rail for folding said second pair of flaps inwardly toward one an other to dispose them below the supporting surface of said rail while

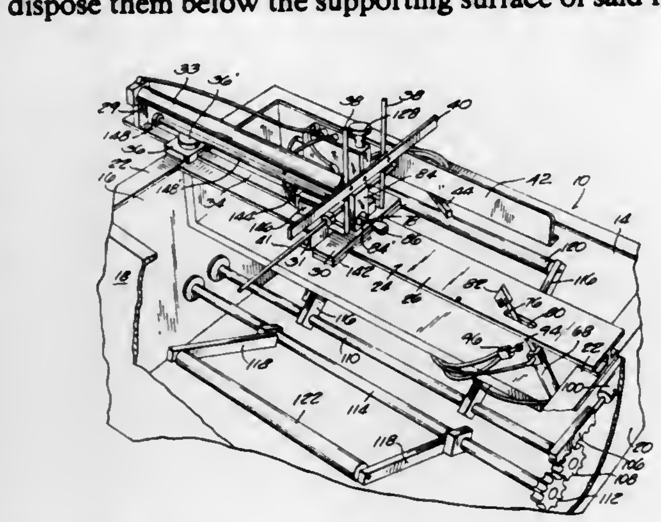

said first pair of flaps continue resting on said top surface, with said rail forming a slide for discharge of the carton from said discharge end.

4,063,493

ROTARY DIE CUTTING MACHINE

Dale L. McEvers, and Daniel P. Struble, both of Kettering, Ohio, assignors to H&H Industries, Inc., Dayton, Ohio

Filed Nov. 15, 1976, Ser. No. 741,617

Int. Cl.² B31B *1/20*

U.S. Cl. 93—58.2 R **5 Claims**

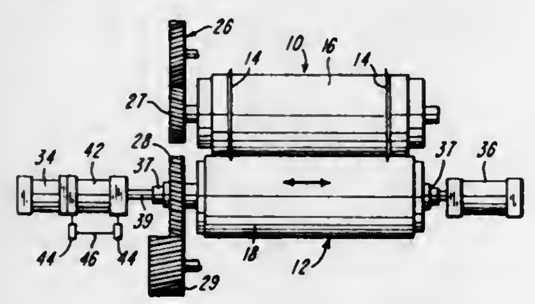

1. In a rotary die cutting machine including a die cutting roll adapted to support axially extending and circumferentially extending die cutting blades, a back-up roll having an axis disposed substantially parallel to the axis of said die cutting roll, a mat of resilient material mounted on said back-up roll and adapted to be engaged by said die cutting blades when the rolls are rotated, means for successively feeding sheets of material to be die cut between said rolls, means for driving said rolls and said sheet feeding means, and means for reciprocating said back-up roll in an axial direction, the improvement wherein said means for reciprocating said back-up roll comprises air cylinder means connected to move said back-up roll axially, means for supplying air pressure to said air cylinder means, a hydraulic cylinder having an axially movable member connected to move axially with said back-up roll, means for metering the flow of hydraulic fluid within said hydraulic cylinder to control the maximum rate of axial reciprocating movement of said back-up roll by said air cylinder means, and means for simultaneously rotating said back-up roll relative to said die cutting roll when said back-up roll moves axially to avoid repetitive engagement of said die cutting blades with said mat.

4,063,494

APPARATUS FOR MAKING FILTER RODS FOR CIGARETTES

Floyd Vanmeda Hall, Durham, N.C., assignor to Liggett Group Inc., Durham, N.C.

Filed Feb. 18, 1977, Ser. No. 769,968

Int. Cl.² A24C *5/50*

U.S. Cl. 93—77 FT **17 Claims**

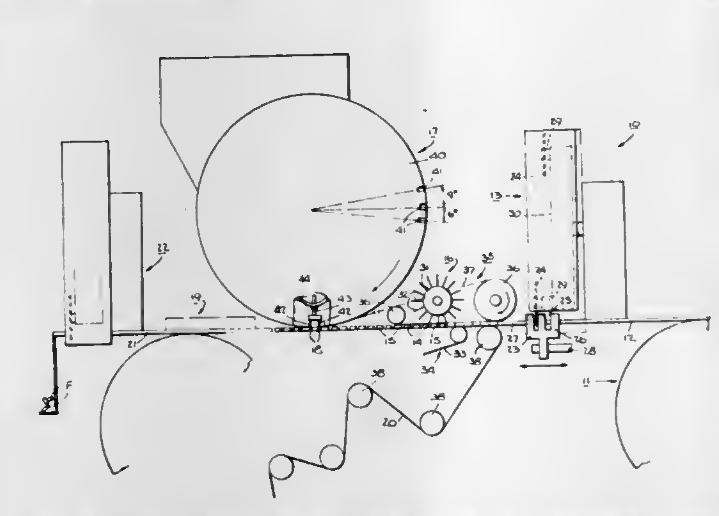

1. An apparatus for making filter rods for cigarettes comprising

- means for delivering a continuous rod of entrainment-type filter material in a predetermined path;
- a knife assembly in said path for severing discrete plugs from said rod with alternate plugs being of different length;
- means for spacing said plugs at equal spacings from each other;
- means for sequentially depositing adsorptive-type filter material between said plugs;
- means for wrapping a strip of paper around said plugs and said adsorptive type filter material to form a continuous filter rod; and
- a knife for severing said continuous filter rod into predetermined lengths.

4,063,495

CONTAMINATION PREVENTION FOR OPERATING AREAS

Zinon Duvlis, Burgdorfer Damm 5, 3 Hannover, Germany

Continuation-in-part of Ser. No. 570,189, April 21, 1975. This application Jan. 21, 1976, Ser. No. 667,012

Claims priority, application Germany, Jan. 25, 1975, 2503056

Int. Cl.² F24F *9/00;* **B01D** *46/00*

U.S. Cl. 98—36 **8 Claims**

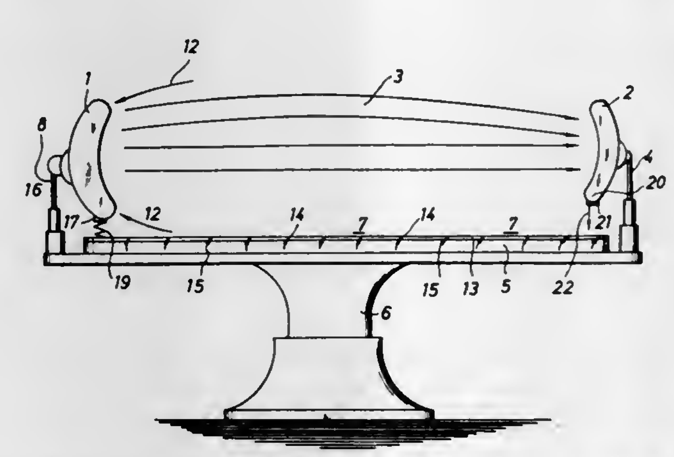

2. An arrangement for preventing access of bacteria and other contaminants to an area in which medical operations are carried out, comprising first means for producing a stream of sterile gas; second means for directing said stream tangentially over said area to form a gas curtain which prevents access of contaminants to said area; and third means for preventing ambient contaminants from penetrating into said stream of sterile gas; said third means comprising an additional stream of gas which travels at differential speed relative to the first-mentioned stream and draws off the boundary layer of the same, said additional stream being annular, surrounding said first-mentioned stream and traveling in counterflow to the same.

4,063,496

CULINARY UTENSIL

Eugene Kozikowski, 8116 Darlene, Warren, Mich. 48093

Filed Dec. 15, 1975, Ser. No. 640,867

Int. Cl.² A47J *37/04*

U.S. Cl. 99—419 **5 Claims**

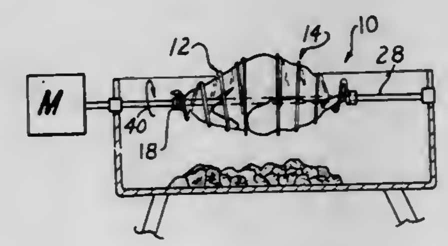

1. An improved culinary utensil to be used for the advantageous cooking of food such as poultry, fish, game, and other meats carried on a rotatable skewer, said utensil comprising a rotatably mounted skewer; two spiral spring-like food holding elements, each element comprising:

- a spiral member fabricated from a flexible material which permits radial stretching and axial compression of said spiral member, said spiral member having a skewer receiving end locating the beginning of said spiral member, and a food receiving end opposite said skewer receiving end locating the termination of said spiral member; and
- a collar integrally connected to said skewer receiving end of said spiral member, said collar having means for releasably engaging a skewer, said collars being carried on said skewer at longitudinally spaced locations such that their associated holding spiral members are axially compressed and radially expanded for securingly engaging said food.

4,063,497

APPARATUS FOR MAKING CREPES OR THE LIKE

James R. Thompson, 3348 Oak Hollow, Oklahoma City, Okla. 73120

Filed Feb. 20, 1976, Ser. No. 659,674

Int. Cl.² A47J *37/10*

U.S. Cl. 99—423 **8 Claims**

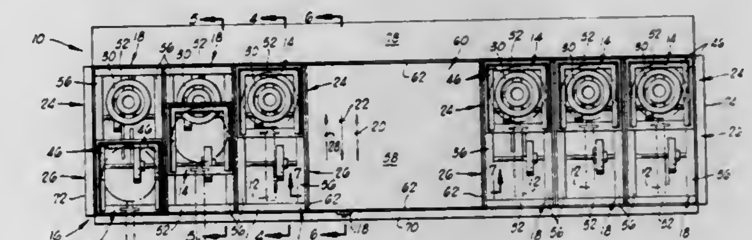

1. An apparatus for use with a crepe pan for making crepes or the like, the apparatus comprising:

- a pan support frame for supporting the crepe pan;
- a frame having a substantially horizontal portion supporting the pan support frame for movement along a horizontal path of movement in a first direction from a cooking position to a handling position, and in a second direction substantially opposite to the first direction from the handling position to the cooking position;
- a heating unit connected to the frame, the heating unit being positioned to heat the crepe pan when the pan support frame is in the cooking position;
- first motive means for moving the pan support frame in the first direction from the cooking position to the handling position, the first motive means including:
- a first cam rotatably supported substantially beneath the handling position of the pan support frame, the first cam

having a lobe extending substantially radially therefrom; and,

means for supporting and rotating the first cam in a first rotary direction to move the lobe thereof along the path of movement of the pan support frame generally in the first direction, the lobe engaging the pan support frame for movement in the first direction from the cooking position to the handling position and then disengaging from the pan support frame;

second motive means for moving the pan support frame in the second direction from the handling position to the cooking position; and,

means coordinating the operation of the first and second motive means so that the pan support frame is maintained in the cooking position for a first predetermined time and in the handling position for a second predetermined time.

4,063,498

TRUSS FABRICATING MACHINE

Rocco A. Labellarte, Park Ridge, Ill., assignor to Edward Hines Lumber Company, Chicago, Ill.

Filed Sept. 17, 1975, Ser. No. 614,305

Int. Cl.² B30B *3/04*

U.S. Cl. 100—176 **17 Claims**

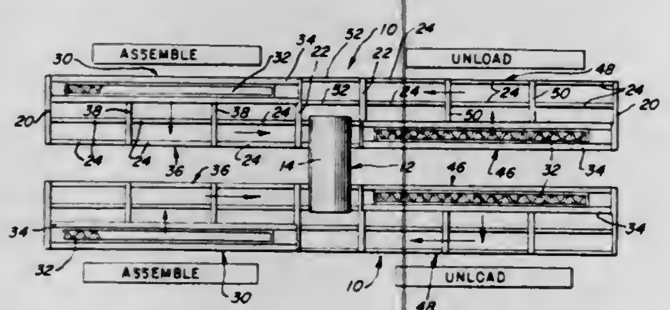

1. An elongated fabricating machine for setting the teeth of opposed connector plates into wooden truss members, comprising: means defining a first assembly station along one side of one end of the elongated machine for supporting components of a truss member for assembly into suitable jigging; means defining a second, pre-press station for supporting an assembled truss member and jigging along the opposite side of said one end of the machine; means defining a third, post-press station for supporting an assembled truss and jigging member along said opposite side of the machine; a roller press disposed between said second and third stations and including transversely extending, vertically spaced upper and lower rollers for pressing the teeth of upper and lower connector plates into the components of the assembled truss member; means defining a fourth, unload station along said one side of the opposite end of the machine for supporting the completed truss member and jigging and where the completed truss member can be removed from the jigging and transport means between said first and second stations for moving an assembled truss member and jigging therebetween.

4,063,499

CAM FEED WITH CYCLE SYNCHRONIZATION

Kenneth C. Johnson, Des Plaines, Ill., assignor to F. J. Littell Machine Company, Chicago, Ill.

Filed Dec. 20, 1976, Ser. No. 752,206

Int. Cl.² B30B *15/30;* **B65H** *17/22*

U.S. Cl. 100—215 **10 Claims**

1. In a flexible belt drive for an intermittently driven feed roll, the combination with a press adapted to operate on strip material and having a press drive shaft, a gear and cam housing providing an input drive shaft for driving the said feed roll and having an adjustably fixed position on the press, a swing plate rotatably mounted on the input drive shaft for rotative adjustments, said swing plate having a releasably fixed connection to the gear and cam housing for any rotatably adjusted position of the plate, a stud shaft supported by the swing plate and being journalled thereby for rotation, a pair of timing sprockets keyed to the shaft in side by side relation so as to rotate with the shaft, a first timing belt operatively connecting the press

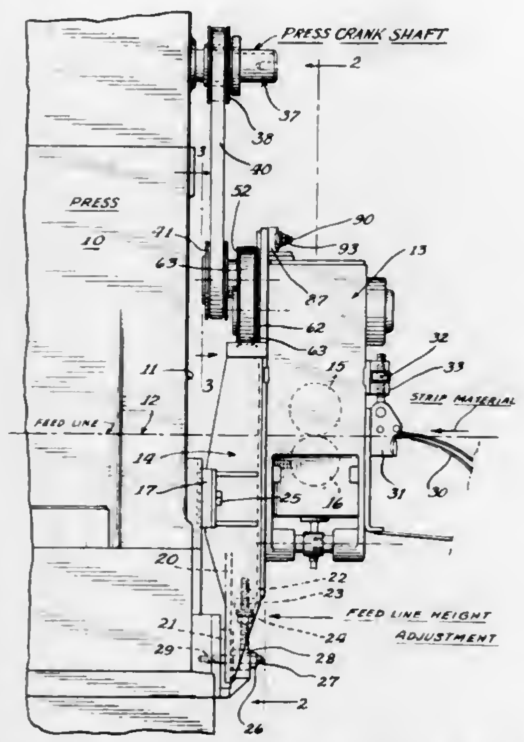

drive shaft with one of said timing sprockets, and a second timing belt operatively connecting the timing sprocket with the input drive shaft.

4,063,500

ROTARY HOT-STAMPING APPARATUS

Moriaki Abe, Tokyo, Japan, assignor to E.D.M. Co., Ltd., Tokyo, Japan

Filed Aug. 16, 1976, Ser. No. 714,660

Claims priority, application Japan, Sept. 25, 1975, 50-131311[U]

Int. Cl.² B44B *5/00*

U.S. Cl. 101—25 **4 Claims**

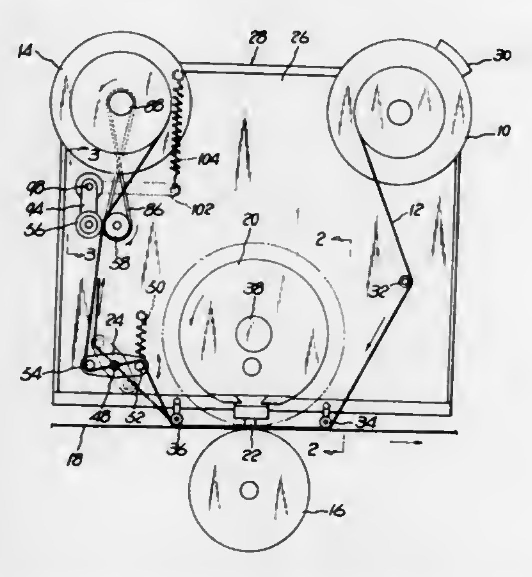

1. In hot stamping apparatus wherein heated type is pressed against a printing ribbon for imprinting characters on a continuous strip of material traveling in a predetermined direction over a platen at constant speed, the type having at least one relief character on its face, the combination of:

a. a support panel defining a ribbon travel path including thereon a rotatable payoff reel from which the printing ribbon is fed at one end of said defined travel path;

b. a rotatable takeup reel likewise supported by said panel at the other end of said defined travel path for accumulating the printing ribbon fed from said payoff reel, the printing ribbon traveling from said payoff reel to said takeup reel generally in a direction opposite to said predetermined direction and being placed in superposition on the strip of material over said platen;

c. a type carrier likewise supported by said support panel along said travel path between said payoff and takeup reels, having type fixedly mounted thereon and rotatable on said panel about a fixed axis over said platen, the type on said type carrier being adapted to be pressed against the printing ribbon on the strip of material over said platen;

d. drive means coupled to said type carrier for imparting rotation to said type carrier for revolving said type at speed synchronous with the speed of the strip of material and in a direction corresponding to said predetermined direction;

e. yieldable means supported on said panel between said takeup reel and said type carrier tending to hold an extra length of the printing ribbon between said platen and said takeup reel, whereby the printing ribbon is permitted to be transported a predetermined distance in said predetermined direction with the strip of material relative to said platen while being pressed by the type and, when subsequently released by the type, to return the same distance to said opposite direction relative to said platen; said yieldable means having: a pullback lever pivotally supported on said panel at a point intermediate both ends thereof, a pair of rollers rotatably mounted on both ends of said pullback lever, and, resilient means yieldably urging said pullback lever to a predetermined angular position, said pullback lever being angularly displaceable from said predetermined position against the force the force of said resilient means when the printing ribbon is transported in said predetermined direction relative to said platen;

f. takeup reel actuating means coupled to said takeup reel for causing said takeup reel to wind up a length of the printing ribbon corresponding to the width of the character on the typeface after each time the type has been pressed against the printing ribbon; and,

g. drawoff means for drawing the successive desired lengths of the printing ribbon from between said platen and said type carrier coupled to said yieldable means and for feeding the printing ribbon toward said takeup reel, said drawoff means including: a pair of drawoff rollers with means urging said drawoff rollers against each other via the printing ribbon under sufficient pressure to hold the ribbon frictionally arrested therebetween when the ribbon is transported in said predetermined direction by the type, and drawoff roller actuating means including a drawoff roller shaft on one of said drawoff rollers for intermittently rotating said drawoff rollers through a predetermined angle in step with the rotation of said takeup reel, said drawoff roller actuating means also including: a cam coupled to and constantly rotated by said drive means, a cam follower mounted on said cam for translating the rotary motion of said cam into reciprocal motion, said cam follower having a free end with link means at said free end, a one-way clutch coupled to said link means, said one-way clutch being operatively connected to said drawing roller shaft transmitting the reciprocal motion of said cam follower to said one drawoff roller via said one-way clutch whereby said one drawoff roller is rotated only in such a direction that the printing ribbon is fed toward said takeup reel.

4,063,501

ADJUSTABLE MODULAR ROTARY SCREEN MOUNT

Andre Lotté, Mulhouse, France, assignor to Societe Alsacienne de Mecaniques de Mulhouse, Mulhouse Cedex, France

Filed July 16, 1976, Ser. No. 705,783

Claims priority, application France, Sept. 30, 1975, 75.29853

Int. Cl.² B41F *15/38*

U.S. Cl. 101—128.1 **8 Claims**

1. A rotary screen printing machine having a longitudinal axis for the printing of articles in strip form extending in the direction of said axis, said machine comprising a bedplate and at least one removable printing module carried on said bedplate; each said printing module comprising: a base; means for rotatably supporting respective ends of a cylindrical screen, said screen having a screen axis; screen-driving means for rotatably driving said screen, said screen-driving means having a module-borne connecting member; means for supporting a squeegee-carrier; first, second, third and fourth vertical legs mounted in said base for vertical adjustment with respect thereto and each having a lower end, said first and second legs being located on one side of said longitudinal axis of the machine while said third and fourth legs are located on the other side of said axis of the machine; and individual means in said base for vertically adjusting each of said legs; said machine bedplate comprising: even horizontal seating surfaces supporting said lower ends of said legs of said printing module with the

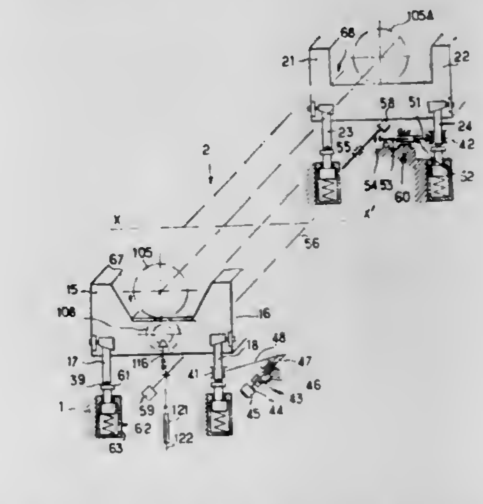

said screen axis extending in a direction transverse to said longitudinal axis of the machine; guiding means for permanently preventing said first leg located on one side of said machine axis from moving in the direction of said axis of the machine; angular adjusting means for horizontally adjusting the position of one of said third and fourth legs with respect to the corresponding said seating surface in a direction parallel with the direction of said longitudinal axis of the machine; said guiding means including transverse adjusting means for horizontally adjusting the position of said first leg with respect to the corresponding said seating surface in a direction transverse to said longitudinal axis of the machine; and a rotating driving part operatively engageable with said module-borne connecting member for driving said rotary screen.

4,063,502

SQUEEGEE AND FLOOD-BAR DRIVE WITH SCREEN LIFT

Leroy G. Cunningham, 1515 S. 118 E. Ave., Tulsa, Okla. 74128

Filed Nov. 17, 1975, Ser. No. 632,457

Int. Cl.² B41F *15/08, 15/42*

U.S. Cl. 101—123 **6 Claims**

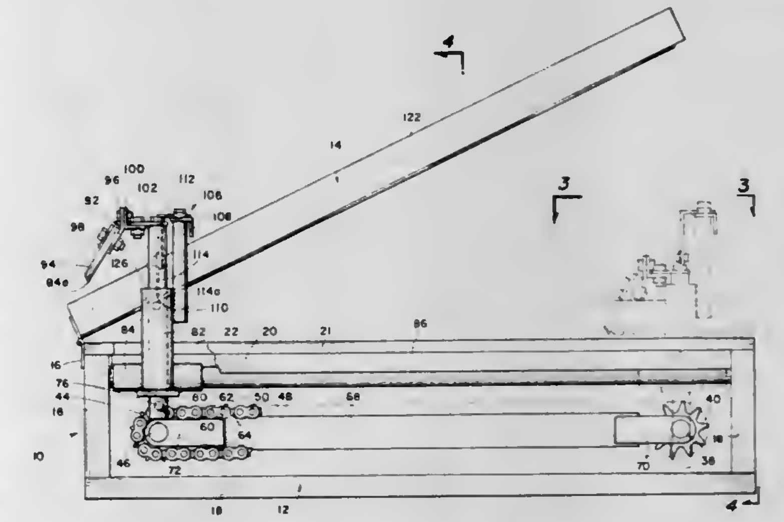

1. Silk screen printing apparatus comprising support base means, frame means hingedly secured to the support base

means and pivotally movable between raised and lowered positions with respect thereto, a silk screen carried by said frame means, inking-squeegeeing means movable to and fro with respect to the frame means for applying ink to the silk screen in one direction of movement and squeegeeing ink through said silk screen in an opposite direction of movement, drive means carried by the support base means and operably connected with the inking-squeegeeing means for providing said to and from movement therefor, and means carried by the inking-squeegeeing means for automatically raising the frame means during the inking of the silk screen and lowering the frame means prior to the squeegeeing of the silk screen and wherein said last-mentioned means comprises pin means rigidly secured to the inking-squeegeeing means and slidably engageable with the frame means for pivoting the frame means about the hinged connection thereof upon one direction of movement of the inking squeegeeing means and pivoting of the frame means about the hinged connection thereof upon an opposite direction of movement of the inking-squeegeeing means.

4,063,503

AUTOMATIC SCREEN PRINTING MACHINE

Shiro Ichinose, 11-8, 4-chome, Shinohara, Kobe, Japan

Filed June 14, 1976, Ser. No. 695,393

Int. Cl.² B41F *15/08, 15/46*

U.S. Cl. 101—123 **1 Claim**

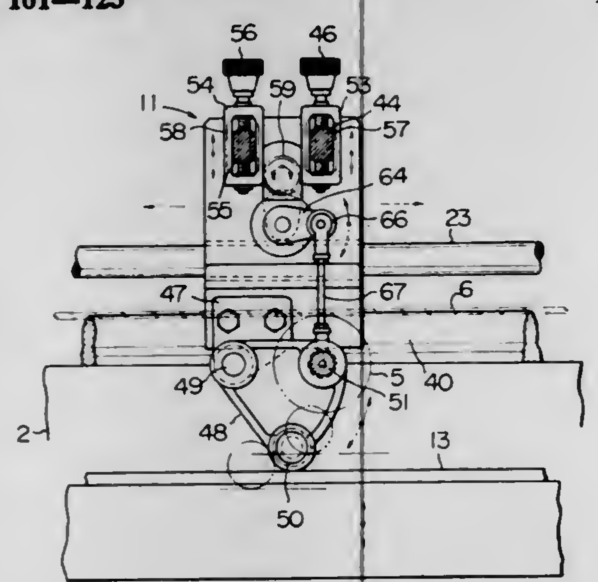

1. In an automatic screen printing machine printing zone including a constant speed conveyor, a flat screen over said conveyor, squeegee means including a squeegee blade over said screen, doctor means including a doctor blade over said screen, a receiving roller under said conveyor, and drive means including means for synchronized reciprocation of the receiving roller, squeegee means and doctor means and lifting means for lifting the receiving roller, the improvement comprising a common support member carrying said squeegee, doctor blade and receiving roller, said common support member being mounted for reciprocation on a fixed plane,

a lever hinged on said common support member for rotation on an axis substantially parallel to said fixed plane,

bearing means in said lever for mounting said receiving roller,

said lifting means including a

lift rail underlying a portion of said lever and in engagement therewith whereby said receiving roller is raised and lowered in relation to said fixed plane,

means for alternately raising and lowering said squeegee and said doctor blade and including

a squeegee rack,

a doctor blade rack,

a pinion gear in engagement with both said racks, and

link means for rotating said pinion gear in unison with raising and lowering of said receiving roller to lower said squeegee when said receiving roller is lifted and to lower said doctor blade when said receiving roller is lowered.

4,063,504

APPARATUS FOR APPLYING AND WITHDRAWING AN IMPRESSION CYLINDER ACTING ON THE PLATE CYLINDER OF AN INTAGLIO PRINTING PRESS

Ludger Ottenhues, Riesenbeck, and Willi Meyer, Ibbenburen, both of Germany, assignors to Windmoller & Holscher, Lengerich, Germany

Filed Mar. 4, 1977, Ser. No. 774,456

Claims priority, application Germany, Mar. 8, 1976, 2609513

Int. Cl.² B41F *9/00*

U.S. Cl. 101—153 **8 Claims**

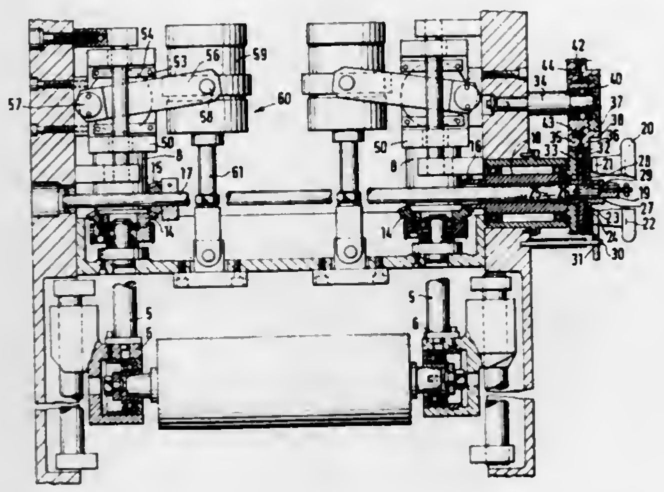

1. In an intaglio printing press comprising a frame and cooperating plate and impression cylinders rotatably mounted in said frame, said impression cylinder being provided with two journals each of which is operatively connected to respective screwthreaded spindles, apparatus for applying and withdrawing said impression cylinder respectively to and from said plate cylinder, said apparatus comprising first and second rotatable nuts mounted on each said spindle, means coupling said first nut on each spindle for rotation in unison with said second nut but allowing for movement of said first and second nuts with respect to one another in the axial direction corresponding to the play between the said nuts and the screw thread on the said each spindle, a hand wheel, abutment surfaces fixed with respect to the said frame, transmission means comprising shafts and gearing operatively connecting said hand wheel to said first nuts for allowing selective adjustment of each of said first nuts either in unison or independently of one another with corresponding adjustment of the respective said spindles whereby said first nuts can be displaced to be applied to respective said abutment surfaces by operating said hand wheel, and a piston-cylinder unit operatively connected to each said second nut to lift and lower same, means for supplying said piston-cylinder units with pressure medium through independent fine control valves.

4,063,505

PAPERING APPARATUS IN ROTARY PRINTING PRESS

Yoshifumi Sasamoto, and Masakazu Iida, both of Yokohama, Japan, assignors to Ikegai Iron Works, Ltd. and Ikegai Goss Co. Ltd., both of Tokyo, Japan

Continuation of Ser. No. 597,762, July 21, 1975, abandoned. This application Mar. 2, 1977, Ser. No. 773,690

Int. Cl.² B41F *13/06*

U.S. Cl. 101—228 **7 Claims**

1. In printing press apparatus of the class in which a web of printed paper is moved from a printing section through a slitting section to a former, said slitting section comprising first slitter means for slitting said web longitudinally into two partial webs of equal widths one of which partial webs is passed through a turning-bar section on its way to said former so that both said partial webs are in laterally-aligned superposed relation with each other upon reaching the former, means for accomplishing initial threading of said one partial web through said turning-bar section, comprising:

controllable second slitter means in said slitting section for slitting said web longitudinally into two partial webs of different widths, the wider of said partial webs of different widths being the one which is to be threaded through said turning-bar section;

endless double-threading-belt means and means for driving said double-threading belt means along the path of the margin of the slit edge of said wider partial web from the entrance to said turning-bar section through said turning-bar section to said former, said belt means grasping said margin of said wider partial web and threading said wider partial web through said turning-bar section into proper laterally-aligned superposed relation with the narrower of said partial webs of different widths, said double threading-belt means comprising two component belts which are separable to form a nipping section for receiving said margin of said wider partial web and which are reclosable

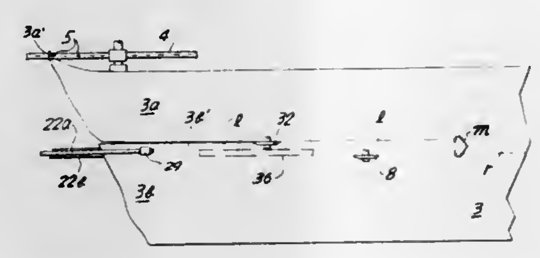

to each other to nip said margin between them and accomplish said grasping thereof;

controllable transverse cutter means for producing a transverse cut extending between the longitudinal line of slitting of said first slitter means and the longitudinal line of slitting of second slitter means; and

control means for controlling the timing of operation of said first and second slitter means and of said transverse cutter means such that said second slitter means operates on the leading portion of said web to divide it into said two partial webs of different widths until the slit formed by it intersects said transverse cut, and said first slitter means operates to form a longitudinal slit dividing said web into said two partial webs of equal thickness beginning at said transverse cut and continuing thereafter during the subsequent normal operation of said press, whereby the slits formed by said first and second slitter means are joined by said transverse cut to form a single continuous slit.

4,063,506

HOLDER FOR USE WITH DEVICE FOR IMPRINTING INDICIA ON A FLEXIBLE ARTICLE

James F. Dwyer, 47 Kenyon St., Providence, R.I. 02903

Division of Ser. No. 589,784, June 23, 1975, Pat. No. 3,992,988, which is a continuation-in-part of Ser. No. 538,421, Jan. 3, 1975, Pat. No. 4,004,503. This application Oct. 26, 1976, Ser. No. 735,804

Int. Cl.² B41J *3/46;* **B41F** *1/34*

U.S. Cl. 101—407 BP **7 Claims**

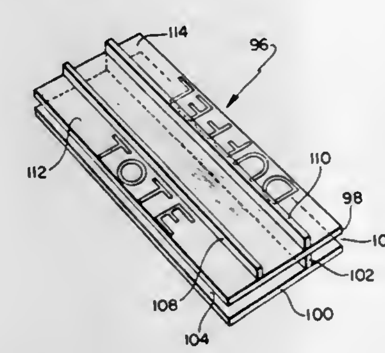

1. A holder for use in an imprinting device for imprinting indicia from indicia strips on a flexible article, comprising a first wall, a second wall spaced from said first wall in parallel relation thereto and means for positioning an article to be imprinted relative to said indicia strips, said means comprising a longitudinally extending rib joined to said first and second walls and separating said walls to define opposed longitudinally extending slots therein, said rib being located such that the depth of one slot is different from the depth of the other slot, the difference in depth of said slots providing for each slot locating said article relative to said imprinting device and accommodating an article of different shape and configuration therein on which indicia is to be imprinted.

4,063,507

PROCESS FOR BURNING IN PLANOGRAPHIC PRINTING PLATES

Tadao Toyama; Masaru Watanabe, and Harumasa Kitago, all of Shizuoka, Japan, assignors to Fuji Photo Film Co., Ltd., Minami-Ashigara, Japan

Filed June 3, 1976, Ser. No. 692,396

Claims priority, application Japan, June 4, 1975, 50-67180

Int. Cl.² G03F *7/02;* **B41C** *1/10*

U.S. Cl. 101—467 **9 Claims**

1. A process for producing a planographic printing plate comprising exposing and developing a light-sensitive printing plate; coating the exposed and developed surface of said plate with a solution containing at least one compound selected from the group consisting of boric acid, or the metal salts or ammonium salt thereof; drying said coating and then subjecting said treated plate to a burning-in without removal of said coating composition from said surface whereby printing can be carried out without applying a conventional surface smoothing treatment after the burning-in.

4,063,508

MUNITION DISPERSION BY INTERSTITIAL PROPELLING CHARGES

Richard A. Whiting, Minnetonka, Minn., assignor to The United States of America as represented by the Secretary of the Air Force, Washington, D.C.

Filed Mar. 9, 1976, Ser. No. 664,620

Int. Cl.² F42B *25/16*

U.S. Cl. 102—7.2 **2 Claims**

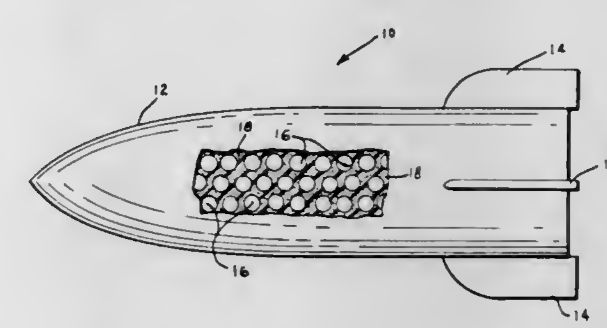

1. In a cluster weapon comprising a container and a multiplicity of submunitions positioned within said container as an unconfined cluster having interstices therebetween, the improvement which comprises having a gas generating, foamed, low density, polyurethane resin matrix positioned within and filling said interstices to form a quick acting mechanism for effecting the dispersion of said submunitions.

4,063,509

DEVICE FOR STIMULATION OF GEOTHERMAL WELLS

Guy W. Leonard, China Lake, and Carl F. Austin, Inyokern, both of Calif., assignors to The United States of America as represented by the Secretary of the Navy, Washington, D.C.

Filed May 17, 1976, Ser. No. 686,768

Int. Cl.² E21B *43/26*

U.S. Cl. 102—20 **4 Claims**

1. In a method for stimulating a geothermal well wherein a shaped charge is lowered into the well and detonated, the improvement residing in utilizing a gas releasing means to prevent geothermal fluid from coming into near proximity of said shaped charge, said gas releasing means being selected

from the group consisting of pyrotechnic cartridges and gas generating cartridges which react with geothermal fluids, and

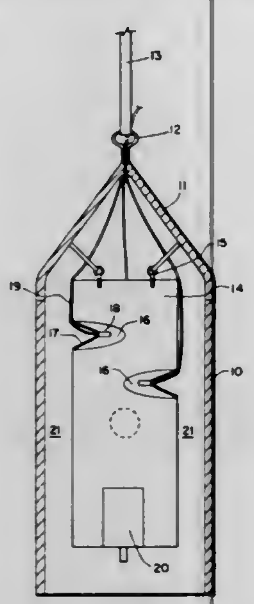

said gas releasing means being adapted to produce gas without activating said shaped charge.

4,063,510
PROCESS FOR DETECTING A MISFIRED EXPLOSIVE
Yasuo Ishii, Yotsukaido; Naozumi Nishimura, and Kohei Abe, both of Sendai, all of Japan, assignors to Taisei Kensetsu Kabushiki Kaisha, Tokyo and Tohoku Kinzoku Kogyo Kabushiki Kaisha, both of, Japan
Filed Aug. 16, 1976, Ser. No. 714,959
Claims priority, application Japan, Aug. 29, 1975, 50-103905
Int. Cl.^{2} F42D *5/02*
U.S. Cl. 102—23 **12 Claims**

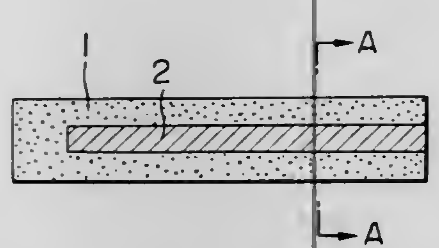

1. A process for indirectly detecting a misfired explosive (cartridge) which comprises charging a ferrite magnet as a tracer in an explosive charging portion together with an explosive in a blasting method and detecting the magnetic flux of said magnet charged in a misfired explosive cartridge at a site of explosion after blasting by a magnet measuring instrument, characterized by using as said tracer a ferrite magnet calcined at a temperature less than 1000° C. and detecting this magnet by said magnetic detector.

4,063,511
SPINNING SHOT GUN PROJECTILE
James M. Bullard, 2622 NW. 25th Place, Portland, Oreg. 97210
Filed July 21, 1976, Ser. No. 707,363
Int. Cl.^{2} F42B *7/10*
U.S. Cl. 102—38 **4 Claims**

1. For use in a shot gun shell comprising a hollow cylindrical case open at its forward end and closed at its rearward end, a propellant in the rearward portion of the case, and a primer mounted in the closed rearward end of the case, a projectile assembly comprising:

a. wad means in the case forwardly of the propellant for retaining the latter in the case, the wad means including a rearward cylindrical body portion arranged to fit snugly within the case for retaining the propellant therein and an integral forward ram portion coaxial with but of smaller diameter than the body portion and extending forwardly therefrom,

b. a cylindrical projectile body dimensioned for insertion in the case forwardly of the body portion of the wad means, the projectile body having an axial bore extending forwardly from its rearward end and dimensioned to received the ram portion of the wad means freely therein, the bore having a length slightly less than the length of the ram portion of the wad means whereby to space the rear-

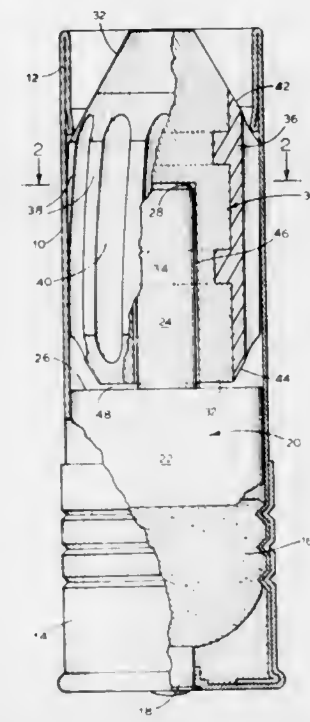

ward end of the projectile body slightly forward of the forward end of the body portion of the wad means and to abut the forward end of the ram portion of the wad means against the inner end of the bore, and

c. a plurality of circumferentially spaced, radially extending spinner vanes on the exterior surface of the projectile body arranged with respect to the longitudinal axis of the projectile body at an angle predetermined to impart a spinning motion to the projectile body during its flight by impingement of air on said vanes.

4,063,512
ARMOR PENETRATING PROJECTILE
Dale M. Davis, Freeport, Fla., assignor to The United States of America as represented by the Secretary of the Air Force, Washington, D.C.
Filed Oct. 5, 1966, Ser. No. 584,944
Int. Cl.^{2} F42B *11/14*
U.S. Cl. 102—52 **3 Claims**

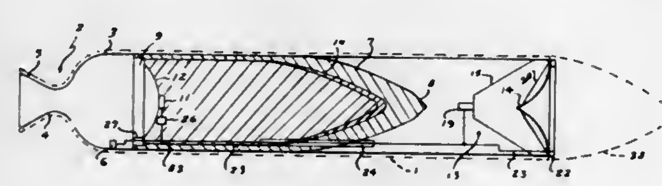

1. An armor penetrating projectile comprising a casing having at its rear end an impulse rocket and at its front end an armor penetrating head, said casing containing the hollow penetrator body positioned between said head and the rocket, said penetrator body containing an internal blast explosive material, said head comprising a cone structure containing a charge of explosive material which upon being exploded serves to form an opening in the target armor, and means forming part of the cone structure for producing a series of gashes radiating from the opening in order to weaken the metal about the opening, said means comprising a plurality of equidistantly spaced flutes positioned about the surface of the cone and extending radially outwardly and downwardly from the

apex of the cone, the recesses between the flutes containing linear shaped charges of explosive whereby when said charges are exploded, the penetrator body and its internal blast explosive are permitted ready entrance through an enlargement of said opening caused by deforming the metal at said gashes.

4,063,513
TARGET SENSING DEVICE
Ben-Ami Kadish, Clifton, N.J., and David I. Parker, Grabill, Ind., assignors to The United States of America as represented by the Secretary of the Army, Washington, D.C.
Filed Sept. 23, 1976, Ser. No. 725,803
Int. Cl.^{2} F42C *19/02*
U.S. Cl. 102—70.2 R **4 Claims**

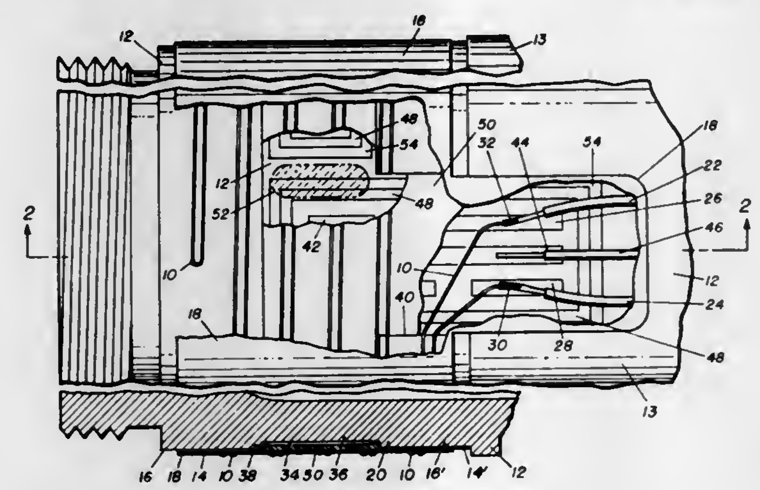

1. A target sensing device for initiating the warhead of a projectile which comprises:

a warhead body section having a pair of peripheral band surfaces thereon, an annular groove disposed intermediate said pair of band surfaces, and a longitudinal slot disposed through one of said pair of band surfaces and communicating with said annular groove;

a fluorocarbon coating disposed on said pair of band surfaces;

a hard target impact sensor means, fixedly disposed in said annular groove and in said longitudinal slot, for indicating breakup of said warhead body when said warhead body penetrates a target;

a target contact sensor means, operatively disposed on said fluorocarbon coating and partially covering said hard target impact sensor means, for indicating contact with said target; and

shield means fixedly disposed over said target contact sensor means and said hard target impact sensor means for isolating said target contact sensor means and said hard target impact sensor means from radio frequency radiations.

4,063,514
GRENADE FUZE
Harry J. Hadfield, Califon, N.J., assignor to The United States of America as represented by the Secretary of the Army, Washington, D.C.
Filed Nov. 5, 1970, Ser. No. 87,345
Int. Cl.^{2} F42B *15/50*
U.S. Cl. 102—79 **4 Claims**

1. A fuze for a shaped charge grenade adapted to be ejected over a target area from a projectile in flight comprising in combination:

a body having a longitudinal bore therethrough consisting of a first bore of one diameter extending from one end of the body to an intermediate point thereof and a second bore extending from said intermediate point to the opposite end of the body whereby an abutment is formed in the longitudinal bore at the intermediate point;

a vented firing pin affixed in the first bore at said one end of the body having its pin member directed inwardly of the first bore and having a lead charge affixed in a chamber in the base thereof;

a closure means formed with a central perforation affixed to the opposite end of the body;

a weight member adapted to slide in the second bore having one end extending through said central perforation and an opposite end formed with a flange member normally abutting said abutment and whereby the movement of said weight member is limited between the abutment and closure member;

a capped tubular member formed on said body radially thereof in communication with the first bore;

resilient means coupling a detonator releasably positioned in said tubular member with the flange of said weight member;

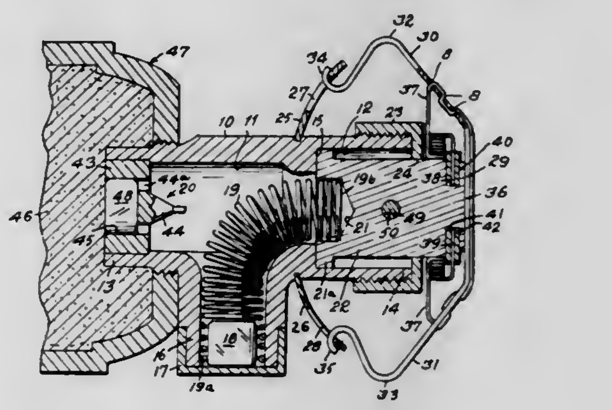

spring means releasably coupled to said body and biasing the weight into engagement with said abutment whereby the detonator is releasably retained in out of line position with the vented firing pin; and

coupling means coupling said spring means with the said one end of the weight whereby when said fuze assembled to a grenade ejected from said projectile the spring means disengages from said body and is caught in the air stream causing the weight to move in the second bore until its flange contacts said closure means whereupon during such movement the detonator is withdrawn from the tubular member and positioned in alignment with said firing pin by the resilient means.

4,063,515
DISPERSIVE SUBPROJECTILES FOR CHAFF CARTRIDGES
Clayton J. Schneider, Jr., East Aurora, and Ernest V. Ruda, East Amherst, both of N.Y., assignors to Calspan Corporation, Buffalo, N.Y.
Filed June 11, 1976, Ser. No. 695,283
Int. Cl.^{2} F42B *13/56*
U.S. Cl. 102—89 CD **13 Claims**

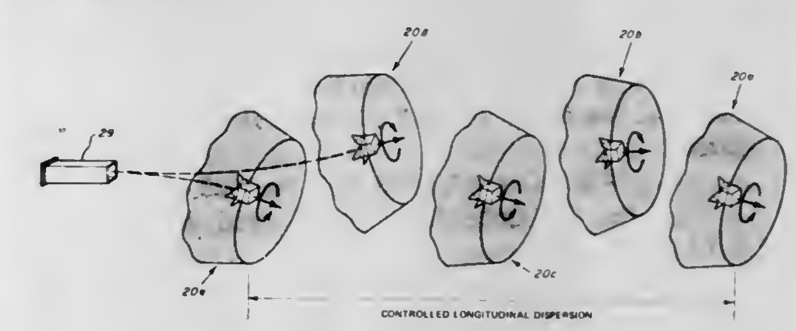

1. In a chaff cartridge of the type having a casing, a primer, a fuze, a propellant charge and a plurality of chaff fibers wherein the improvement comprises a plurality of chaff subprojectiles each of which including:

means defining axially opening cup-like members for receiving said chaff fibers and having outwardly tapering inner

walls for directing said chaff fibers radially outward when said subprojectiles are subjected to centrifugal forces; and
drag producing means for separating said projectiles and converting forward motion to rotational motion and for causing said subprojectiles to rotate and thereby produce centrifugal forces which cause said chaff fibers to coact with said tapering inner walls and to be radially dispensed with respect to said rotating subprojectiles upon the firing of said chaff cartridge due solely to centrifugal and inertial forces.

9. A subprojectile for use in a chaff cartridge including: chaff fibers;
means defining an axially opening cup-like member for receiving said chaff fibers and having outwardly tapering inner walls for directing said chaff fibers radially outward when said subprojectile is subjected to centrifugal forces; and
drag producing means for converting forward motion to rotational motion and causing said subprojectile to rotate and thereby produce centrifugal forces which cause said chaff fibers to coact with said tapering inner walls and to be radially dispensed with respect to said projectile when said projectile is rotating.

4,063,516
TRACK SURFACING
Josef Theurer, Vienna, Austria, assignor to Franz Plasser Bahnbaumaschinen-Industriegesellschaft m.b.H., Vienna, Austria
Filed May 7, 1976, Ser. No. 684,280
Claims priority, application Austria, June 13, 1975, 4568/75
Int. Cl.² E01B *27/02*
U.S. Cl. 104—12 **21 Claims**

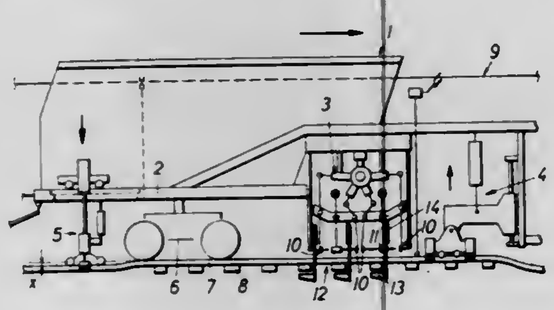

1. A mobile machine for tamping ballast under ties supporting rails of a track, adjacent ones of the ties defining cribs therebetween and the rails intersecting the ties at respective points of intersection, which comprises the combination of
1. vibratory ballast tamping tools arranged to tamp ballast under the ties at the points of intersection and
2. means for removing at least a portion of the ballast from a region below the ties intermediate the track rails, the ballast removing means including
a. ballast removing tools associated with the tamping tools,

4,063,517
RAPID TRANSIT SYSTEM
Michael A. Nardozzi, Jr., 255 Richland Drive, Pittsburgh, Pa. 15235
Filed Oct. 17, 1975, Ser. No. 623,494
Int. Cl.² B60S *13/02;* **A63G** *3/00, 21/18*
U.S. Cl. 104—35 **8 Claims**

1. A rapid transit system comprising,
a superstructure,
an endless waterway supported by said superstructure,
said endless waterway having a bottom wall and sidewalls extending upwardly therefrom to form a trough for the continuous forward flow of water therethrough,
a plurality of vehicles for transporting passengers between selected locations on said waterway, said vehicles being bouyantly supported in said waterway,
stabilizing means secured to said waterway for maintaining said bouyantly supported vehicles at a selected depth in said waterway,
braking means provided on each of said vehicles for controlling the movement of said vehicles in said waterway,
pump means for generating continuous forward movement of water in said waterway to forwardly propel said vehicles,
a main terminal for passengers boarding and departure,
a plurality of said waterways forming endless transit loops radiating in selected directions from said main terminal to provide transportation between a plurality of stations located along said waterway and said main terminal,

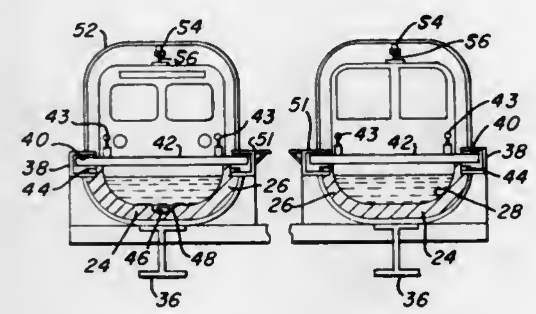

rotatable means located at the end of each of said transit loops and at said main terminal for changing direction of said vehicles in said transit loops,
a concave disc portion rigidly positioned at the end of each of said transit loops, at said main terminal and at selected points therebetween, and
a section of said waterway positioned within each of said concave disc portions and rotatable relative thereto to facilitate change of direction of said vehicles within said waterway.

4,063,518
SHELF STRUCTURE FOR A DISPLAY RACK
Rafael T. Bustos, Clarkston, Ga., assignor to Leggett & Platt, Incorporated, Carthage, Mo.
Filed Mar. 29, 1976, Ser. No. 671,084
Int. Cl.² A47B *11/00*
U.S. Cl. 108—6 **7 Claims**

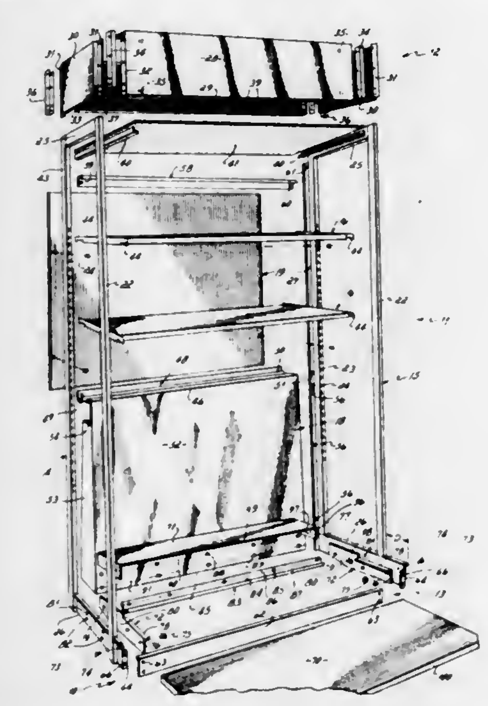

1. A display rack comprising
opposed stationary side frames, each of said stationary frames including a front post and a rear post, said stationary frames being fixed together one to the other,
a one-piece shelf support arm pivotally connected to each of said side frames, each of said shelf support arms being selectively positionable at one of a substantially horizontal display attitude and a tilting display attitude,
latch means connecting each of said shelf support arms to its associated side frame for restraining said support arms in the display attitude selected, and
a shelf carried on said shelf support arms, said shelf including a rear shelf section fixed in position against front-to-rear movement on said support arms when in assembled relation with said display rack, and a front shelf section carried on said support arms in a manner that permits front-to-rear movement when in assembled realtion with said display rack, said front shelf section being telescopable relative to said rear shelf section between an extended position and a retracted position for varying the merchandise support area of said shelf, the front edge of said front shelf section extending outwardly beyond said front posts at least in the extended position.

4,063,519
ANTI-ROBBERY AND ANTI-HOSTAGE EQUIPMENT PROVIDED WITH A ONE-WAY ROTATING DOOR FOR BANKS AND THE LIKE
Gisberto Pretini, Via della Stazione, 3, S. Frediano A Settimo, Pisa, Italy (I-56026)
Filed Oct. 22, 1975, Ser. No. 624,844
Claims priority, application Italy, Oct. 25, 1974, 9605/74
Int. Cl.² E05G *5/02*
U.S. Cl. 109—8 **10 Claims**

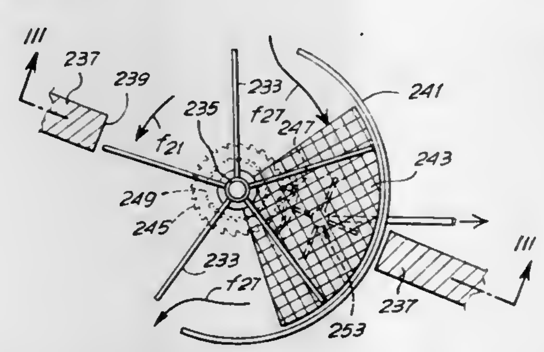

1. Anti-robbery and anti-hostage equipment, for the premises of banks and the like, comprising, in combination, means forming at least one laterally confined passage, having a ceiling and a floor, communicating with the premises to be protected; at least one rotating door, including a vertically oriented rotatable post and a plurality of angularly spaced elements secured to and extending radially from said post, in each passage freely rotatable in a single direction to permit one person at a time to pass along said passage in said single direction; and means operable, responsive to a person entering into said door and attempting to rotate said door, to pass along the passage in a direction opposite to said single direction, to lock said door against rotation; said angular spaced radial elements comprising radially extending imperforate walls, having a height substantially equal to the height of said at least one laterally confined passage; said column and said radially extending walls having vertically elongated bulge portions projecting into the sector spaces defined between adjacent angularly spaced radially extending walls; said bulges being positioned on both surfaces of each radially extending wall; said bulges extending vertically only intermediate the height of a person to provide full clearances, in the sector spaces above and below said bulges, to provide full clearance for the head and feet of such person; whereby only one person at a time can occupy a sector space.

4,063,520
NIGHT DEPOSITORY CLOSURE
Kenneth A. Parsons, Toledo, Ohio, assignor to The Meilink Steel Safe Company, Toledo, Ohio
Filed Apr. 30, 1976, Ser. No. 682,127
Int. Cl.² E05G *1/026*
U.S. Cl. 109—66 **44 Claims**

1. A night depository for parcels through a hole in a wall into a compartment comprising a closure for said hole, said closure comprising:
A. a frame around the inside of said hole,
B. a sector shaped door horizontally pivoted at its apex axis near the bottom of said frame and having a handle on its outer angle side,
C. a pocket formed in said door by a movable wall horizontally pivoted near the peripheral corner of the other and inner angle side of said sector door, whereby said wall acts as an ejector for parcels placed in said pocket when door is in closed position,

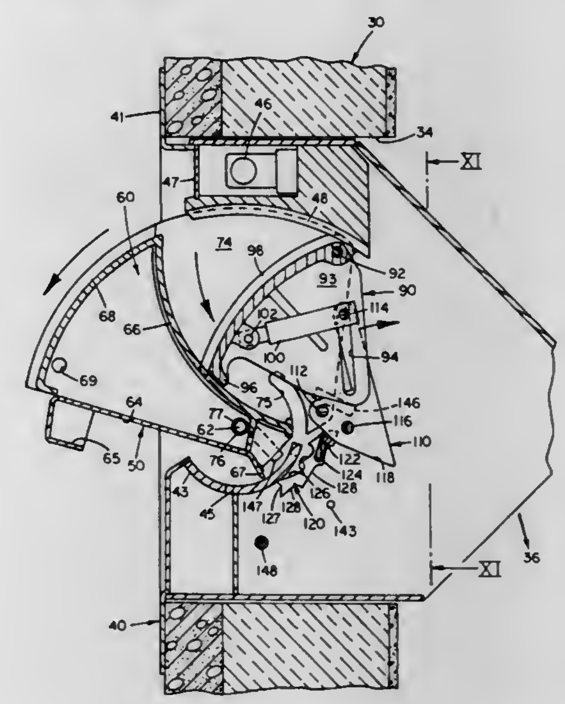

the improvement comprising:
D. a lever means pivoted on said door parallel to the pivotal axis of said door and connected to said movable wall of said pocket, said lever means having a pin means thereon,
E. a pair of spaced stops mounted on said frame and engageable by said lever means and said pin means for moving said lever means to move said movable wall, and
F. a ratchet means pivoted to said frame and engageable by said pin means on said lever means to prevent reversing movement of said door intermediate its opened and closed positions.

4,063,521
INCINERATOR HAVING GAS FLOW CONTROLLING SEPARATOR
Jan J. Pech, Bartlesville, Okla., assignor to Econo-Therm Energy Systems Corporation, Minnetonka, Minn.
Filed Aug. 19, 1976, Ser. No. 716,070
Int. Cl.² F23G *5/00;* **F23J** *15/00*
U.S. Cl. 110—8 A **8 Claims**

1. An incinerator, comprising:
structure defining a primary combustion chamber for receiving waste materials to be burned, and an adjacent secondary combustion chamber positioned above said primary chamber;
generally horizontally disposed partition means situated between said primary and secondary combustion chambers and configured to present a plurality of relatively small combustion gas-conveying apertures therethrough which communicate said primary and secondary chambers, have upright axes, are located in spaced relationship about the periphery of the partition means, and cooperatively present a total open area in communication with the primary chamber which is substantially less than the total surface area of the face of said partition means adjacent the primary chamber; and
peripheral baffle structure located within said secondary chamber adjacent to and directly above said apertures for removal of at least a portion of any solids entrained in the

gases passing through said apertures by slowing and lateral deflection of said gases as the latter pass the baffle

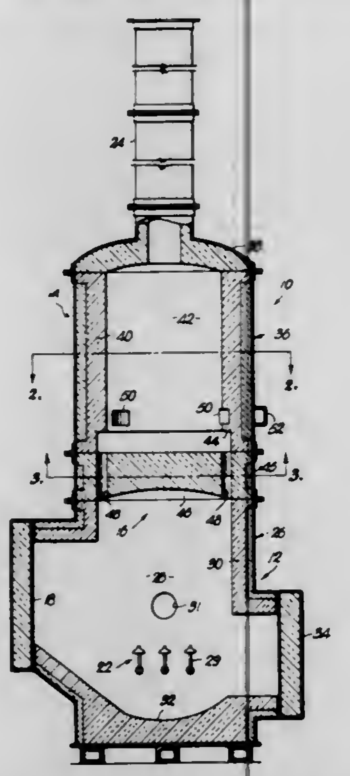

means, and for repassage of a part of said removed solids back through said certain apertures.

4,063,522
BURNER INSTALLATION IN A STEAM GENERATOR WITH FIRING MEANS FOR PULVERIZED COAL AND GAS
Eberhard Wittchow, and Rudolf Kral, both of Erlangen, Germany, assignors to Kraftwerk Union Aktiengesellschaft, Mulheim (Ruhr), Germany
Filed May 24, 1976, Ser. No. 689,568
Claims priority, application Germany, May 30, 1975, 2523852
Int. Cl.² F23C *1/12*
U.S. Cl. 110—22 A **3 Claims**

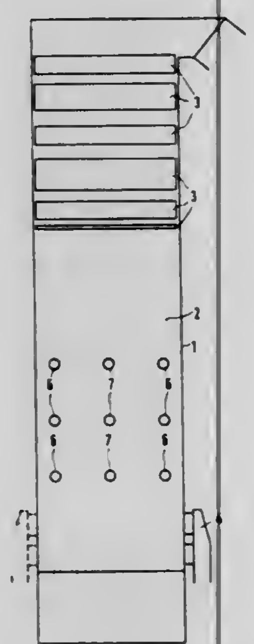

1. Burner installation in a steam generator having means for firing pulverized coal as well as gas, comprising a combustion chamber of substantially rectangular cross section, at least three pulverized coal-burners disposed mutually adjacent one another in cross-sectional direction of said combustion chamber on a first wall of said combustion chamber, at least one of said pulverized coal-burners being located between others thereof, gas burners located on at least another wall of said combustion chamber located adjacent said first wall thereof, said pulverized coal burners being located at an elevation of said combustion chamber above said gas burners, said pulverized coal-burners, on the one hand, and said gas burners, on the other hand, having means for introducing pulverized coal and gas, respectively, thereto in directions substantially perpendicular to one another, said others of said pulverized coal-burners being operable independently of said at least one of said pulverized coal-burners and being mutually disposed so far apart that a space free of combustion gas therefrom is located therebetween.

4,063,523
SOIL STABILIZING APPARATUS
Gunnar O. H. Olsson, Svartkarrsvagen 24, S-133 00 Saltjobaden, Sweden
Continuation-in-part of Ser. No. 567,027, April 10, 1975, abandoned, which is a continuation of Ser. No. 408,016, Oct. 19, 1973, abandoned. This application Oct. 26, 1976, Ser. No. 735,363
Int. Cl.² A01C *23/02*
U.S. Cl. 111—7 **19 Claims**

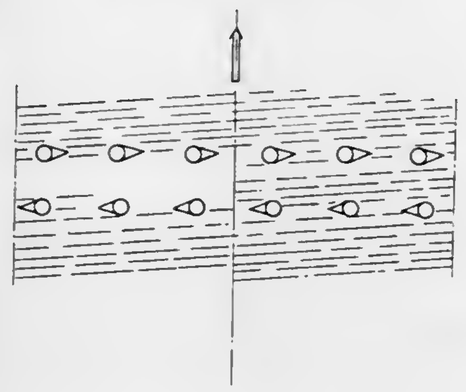

1. In a method of mixing a soil stabilizing material in solid or liquid form into a soil course by means of a carrier transportable over the surface of soil and having a plurality of material injecting members, said method comprising the step of moving the plurality of material injecting members through the soil course in a closed path relative to the carrier while the carrier is being transported over the surface of the soil, the improvement wherein the closed path is in the shape of two half circles connected by two substantially straight portions which are tangential to the half circles, said half circles having the least possible radius.

4,063,524
TWIN-NEEDLE SEWING MACHINE WITH GUIDE MEANS FOR SIMULTANEOUSLY STITCHING A PAIR OF CONCEALED SLIDE FASTENER STRINGERS TO A FABRIC
Koichi Ochiai, Monchen-Gladbach, Germany, assignor to Yoshida Kogyo Kabushiki Kaisha, Japan
Filed May 3, 1976, Ser. No. 682,785
Claims priority, application Japan, May 6, 1975, 50-61078[U]
Int. Cl.² D05B *35/10*
U.S. Cl. 112—152 **3 Claims**

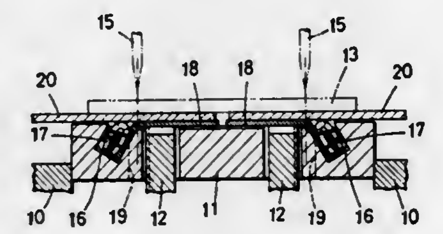

1. In a sewing machine for simultaneously stitching onto a fabric a pair of concealed slide fastener stringer tapes each carrying a row of elements along one of the longitudinal edges thereof, wherein the sewing machine is of the type having a pair of needles movable up and down with respect to a bed past

a presser foot supported thereover for stitching material being fed in a predetermined direction, the improvement comprising a throat plate arranged under said presser foot so as to constitute a part of said bed, said throat plate having formed therein a pair of guide channels generally extending in said predetermined direction each for slidably accommodating said one longitudinal edge of one of the stringer tapes together with the row of elements carried thereon, said guide channels being generally parallel to each other, said throat plate having a pair of openings for the passage therethrough of the respective needles, said throat plate having a generally flat surface between said guide channels and disposed generally parallel to a flat surface of the presser foot to confine the other edge portion of each stringer tape flat against said fabric onto which the stringer tape is stitched.

4,063,525
AUTOMATIC ZIGZAG SEWING MACHINE
Toshio Sasaki, Nagoya, Japan, assignor to Brother Kogyo Kabushiki Kaisha, Nagoya, Japan
Filed Mar. 5, 1976, Ser. No. 664,417
Claims priority, application Japan, Mar. 5, 1975, 50-26777
Int. Cl.² D05B *3/02*
U.S. Cl. 112—158 A **12 Claims**

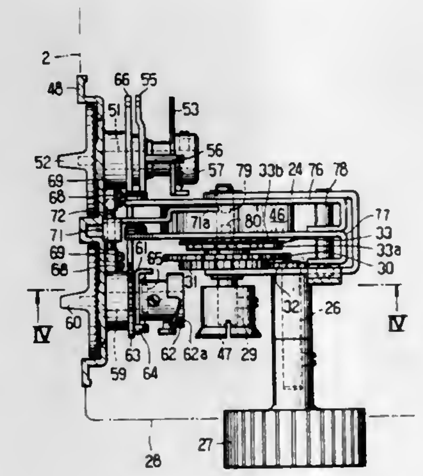

4. A zigzag sewing machine, comprising:
a frame,
a needle bar carried by said frame for lateral oscillation and for lengthwise reciprocation,
a feed dog movably mounted in cooperation with said needle bar,
a main shaft rotatably mounted on the frame for actuating said needle bar and feed dog,
a plurality of stitch pattern cams rotatably carried by the frame and driven in timed-relation to the rotation of said main shaft,
first cam follower means mounted for engaging with a selected one of said stitch pattern cams and for imparting lateral oscillation according to the cam shape to said needle bar,
at least one feed controlling cam rotatably carried by the frame and driven in timed-relation to rotation of the main shaft,
second cam follower means mounted for selectively engaging with said feed controlling cam and for controlling the feed movement of said feed dog according to the cam shape,
cam selecting means operable for selectively engaging said first and second cam follower means with one of said stitch pattern cams and said feed controlling cam, respectively, corresponding to a desired stitch pattern,
an amplitude regulator for regulating the amplitude of lateral oscillation imparted to the needle bar,
a first manually operable knob operatively connected with the amplitude regulator for operation thereof,
a feed regulator for regulating the length and direction of feed movement of the feed dog,
a second manually operable knob operatively connected with the feed regulator for operation thereof, and
connecting means operatively connecting said cam selecting means with said amplitude regulator and said feed regulator for automatically setting them into a predetermined condition suitable to form the desired stitch pattern in relation to the operation of said cam selecting means,
wherein each of said first and second knobs are adapted to be automatically shifted to a position corresponding to each setting of said regulators, respectively, for indicating the amplitude of lateral oscillation and the length of feed movement automatically determined upon said operation of the cam selecting means, and
wherein said feed regulator is controlled according to the cam shape of said feed controlling cam in the automatically shifted position of said second knob upon engagement of said second cam follower means with said feed controlling cam by the operation of said cam selecting means.

4,063,526
COMPOSITE PNEUMATIC MARINE FENDER
Shigeo Ueda, Yokohama, Japan, assignor to Bridgestone Tire Company Limited, Tokyo, Japan
Filed Aug. 6, 1976, Ser. No. 712,295
Claims priority, application Japan, Aug. 27, 1975, 103044
Int. Cl.² B63B *59/02*
U.S. Cl. 114—220 **4 Claims**

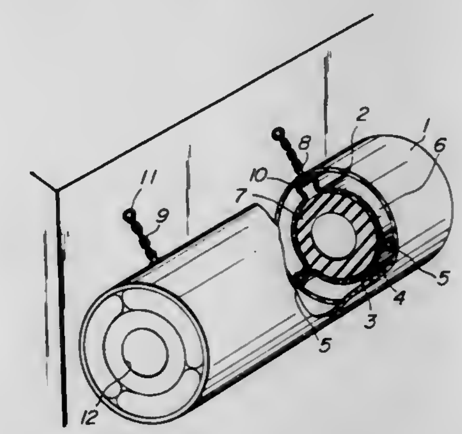

1. A composite pneumatic marine fender comprising an outer cylinder composed of a thin rubber like elastic cylindrical body including an inextensible reinforcing member embedded therein, an inner cylinder composed of a thin rubber like elastic cylindrical body and surrounded by said outer cylinder, said inner cylinder being bonded together with said outer cylinder at a plurality of regions each aligned with a generatrix whose motion generates the surface of said outer cylinder and at a region formed at each end of said inner cylinder to form a plurality of hollow chambers to be pressurized, and a core cylinder composed of a thick rubber like elastic body and surrounded by said plurality of hollow chambers, said inner core being embraced by said inner cylinder when compressed air is admitted into said plurality of hollow chambers and said inner cylinder is inwardly expanded.

4,063,527
MACHINE FOR STIFFENING PORTIONS OF SHEET MATERIAL
Robert Francis Gorini; Herbert Johnson, and Frederick Stirling Sillars, all of Beverly, Mass., assignors to USM Corporation, Boston, Mass.
Filed Feb. 10, 1976, Ser. No. 656,931
Int. Cl.² B05C *1/02*
U.S. Cl. 118—5 **19 Claims**

1. A machine for stiffening a predetermined portion of a flexible work piece comprising, in combination, means for

supporting the work piece with said predetermined portion exposed and outspread,
- a matrix or plate having a surface corresponding to that of the portion to be stiffened and adapted to be chilled, the plate and the support means being relatively movable into and out of register,
- means for depositing molten thermoplastic material on the chilled plate surface with a marginal ridge of the material thicker and hence slower cooling and less viscous than the remainder of the deposit, and

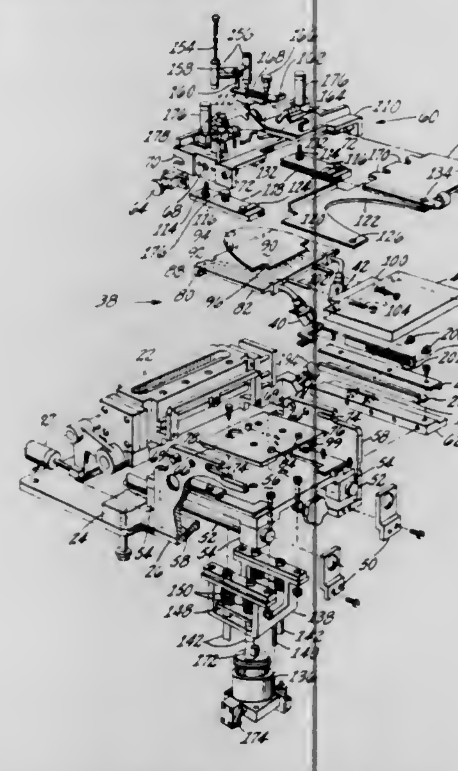

- mechanism for relatively moving the plate and the work supporting means into registered pressing relation to combine the deposited material with said exposed portion of the work piece while the material is still molten and simultaneously cause the thicker, less viscous marginal ridge of the material to be laterally exuded beyond the outline of the original thermoplastic deposit and transferred with tapering thickness to the workpiece.

4,063,528

ARRANGEMENT FOR COLOR MARKING INSULATED ELECTRICAL CONDUCTORS

Klaus Kimmich, Stuttgart, Germany, assignor to International Standard Electric Corporation, New York, N.Y.

Filed June 1, 1976, Ser. No. 691,947

Claims priority, application Germany, July 2, 1976, 2526255; July 5, 1976, 2524572

Int. Cl.² B05C ***5/02***

U.S. Cl. 118—7 **10 Claims**

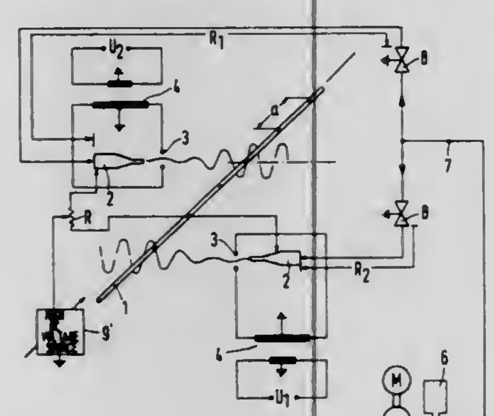

1. In an arrangement for color marking a moving insulated electrical conductor by a stream of color material continuously emerging under pressure from a pair of spray nozzles disposed in a given spaced relation with respect to each other along said conductor and on opposite sides of said conductor, each of said streams of color material being caused to oscillate by a deflection system subjected to a deflection voltage, at least a first arrangement to generate said deflection voltage comprising:
- a first electronic stage to convert a sinusoidal control voltage to an output voltage consisting of rectangles each having a semicircular top portion;
- a second elecronic stage coupled to said first stage to provide said output voltage at the output of said second stage;
- a third electronic stage coupled to said first stage to provide an inverted version of said output voltage at the output of said third stage;
- a push-pull amplifier circuit coupled to said second and third stages to amplify said output voltage at the output of said second stage and to amplify said inverted version of said output voltage at the output of said third stage; and
- a high-voltage transformer coupled to said amplifier circuit to step up the voltage of the resultant output voltage of said amplifier circuit to a high voltage and provide said deflection voltage for coupling to said deflection system.

4,063,529

DEVICE FOR EPITAXIAL GROWING OF SEMICONDUCTOR PERIODIC STRUCTURES FROM GAS PHASE

Ellin Petrovich Bochkarev, Khlebozavodskoi proezd, 3, kv. 16; Vadim Nikolaevich Maslov, ulitsa Al. Tolstogo, 22/2, kv. 101; Nikolai Georgievich Voronin, Petrozavodskaya ulitsa, 15, korpus, 2, kv. 164; Oleg Evgenievich Korobov, Golikovsky pereulok, 13, kv. 6, and Eduard Ivanovich Gavrilin, Michurinsky prospekt, 18, korpus 2, kv. 11, all of Moscow, U.S.S.R.

Filed Apr. 19, 1977, Ser. No. 788,969

Int. Cl.² C23C ***13/08***

U.S. Cl. 118—49.1 **3 Claims**

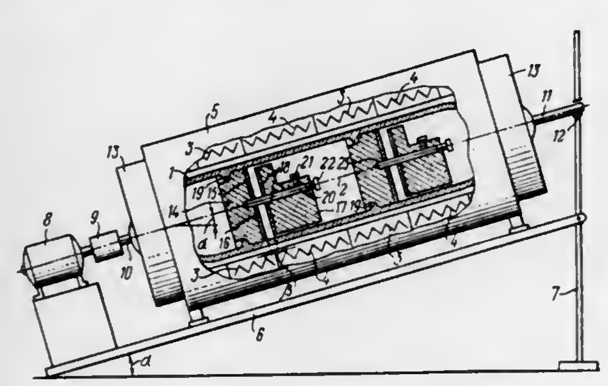

1. A device for epitaxial growing of semiconductor periodic structures from a gas phase, comprising:
- a pressure-tight reactor tilted at an angle between its longitudinal axis and the horizontal plane, which is selected from an interval of from 10° to 80°, and filled with gas containing an agent for carrying the chemical transport reaction;
- an electric motor for rotation of said reactor about its said longitudinal axis, located outside the reactor and kinematically connected to the latter;
- at least two sources of substance, which are made of different solid semiconductor materials and located inside said reactor in one plane and adjacent to each other;
- at least one substrate located inside said reactor in the vicinity of said substance sources;
- at least one group of elements, located inside the reactor and comprising a holder of said at least two substance sources, a unit for holding at least one said substrate and a device for maintaining a constant clearance between the surfaces of said substrate and said sources;
- a heater of said substance sources, located outside said reactor in the vicinity of said sources;
- a heater of said substrate, located outside said reactor and in the vicinity thereof and producing together with said heater of said sources the required difference in temperature between said sources and said substrate;
- said holder of said sources of substances of each of said group of elements, being rigidly secured inside said reactor in a position ensuring perpendicularity of the surfaces of said sources with respect to said longitudinal axis of said reactor;
- said unit for holding said substrate of each said group of elements, located above said holder of said sources free with respect to said reactor and at a distance from said holder, which depends upon the required clearance between said surfaces of said substrate and sources;
- said device for maintaining a constant clearance between said surfaces, which sets said clearance selected from an interval of from 50 microns to 1 mm.

4,063,530

IMAGE FIXING

Raghulinga Reddy Thettu, Webster, and Luke C. Lin, Brighton, both of N.Y., assignors to Xerox Corporation, Stamford, Conn.

Division of Ser. No. 556,065, March 6, 1975, abandoned. This application June 30, 1976, Ser. No. 701,446

Int. Cl.² B05C ***11/00***

U.S. Cl. 118—60 **6 Claims**

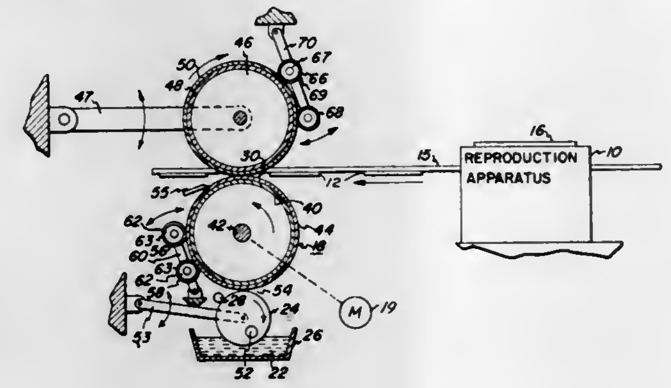

1. An apparatus for fixing a visible pigment image to a sheet of support material comprising:
- a first heated body having a surface thereof;
- a layer of material formed on said surface of said body;
- a layer of elastomeric material formed on said surface;
- a second body having a surface thereof;
- said first and second bodies positioned for providing contact between surfaces of said layers at a nip formed therebetween;
- means for imparting motion to said bodies for providing that a sheet of material introduced to said nip between said bodies is transported through said nip;
- a source of a binder material for fixing visible image on a sheet;
- means for contacting a surface of said elastomeric material with said binder in a fluid state; and
- means for introducing and transporting through said nip an image support sheet, said support sheet having an image formed thereon by a material consisting essentially of a colorant and wherein an image surface of said support sheet is positioned during transit through said nip for coating said imaged surface with said binder material;
- wherein said means for contacting said elastomeric material with said binder comprises a heat applicator body, means for transporting said body in contact with said elastomeric material, and means for contacting said applicator body with said binder material.

4,063,531

COATER FOR BOTH SIDES OF TRAVELING WEB

Clarence R. Zitzow, Beloit, Wis., assignor to Beloit Corporation, Beloit, Wis.

Filed Feb. 3, 1976, Ser. No. 654,859

Int. Cl.² B05C ***5/02, 11/04***

U.S. Cl. 118—122 **14 Claims**

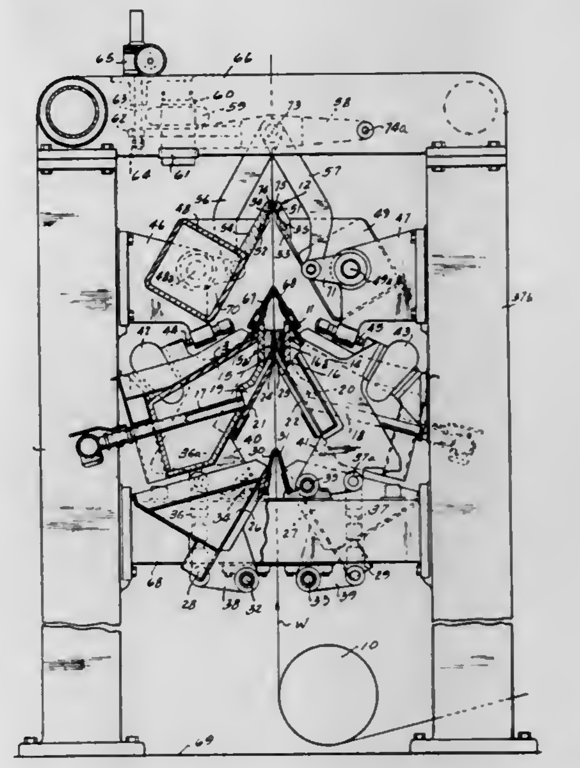

1. A mechanism for applying liquid coating to coat the surfaces of a continuous traveling web with a smooth coating finish comprising in combination:
- means guiding a traveling web along a coating path through a coating station;
- a coating applying means at said station applying a continuous layer of coating to each side of the traveling web;
- first and second opposed thin flexible smoothing blades positioned after the coating station in said coating path with each having a smooth continuous uniform smoothing surface facing the web so that said surface will have an arc of curvature as said blade is pressed toward the web;
- and first and second blade supporting and loading means positioned to respectively support the blades on each side of the web with the blades positioned so that said arc of curvature of the blades will be tangent to the planes of the surfaces of the traveling web as the blade loading means presses the blades toward each other.

4,063,532

FLUIDIZED BED POWDER CHAMBER

Harry P. Kipple, Penn Hills; Roger J. Alke, Wexford, and Charles E. Price, Upper St. Clair Township, Allegheny County, all of Pa., assignors to Westinghouse Electric Corporation, Pittsburgh, Pa.

Filed Jan. 30, 1976, Ser. No. 653,989

Int. Cl.² B05C ***19/02***

U.S. Cl. 118—429 **2 Claims**

1. A fluidized bed system suitable for applying a heat-hardenable resinous coating on an object, comprising a fluidized bed having bottom support means for supporting a powdered resinous material, said bottom support means including a distribution chamber for distributing pressurized air, the distribution chamber being coextensive with the cross-sectionalarea of the fluidized bed and being divided into a plurality of adjoining rows of smaller sectional chambers having upper open sides facing the fluidized bed, each smaller sectional chamber having a common wall with an adjacent chamber of an adjoining row, each common wall being provided with opening means intercommunicating with said adjacent chamber to effect the transmission of pressurized air throughout, the undersurface of the fluidized bed being intercommmunicating with adjacent cham-

bers, conduit means for delivering pressurized air to the distribution chamber, the conduit means communicating with one of the centrally located smaller sectional chambers, the bottom support means comprising felt pad means on the distribution

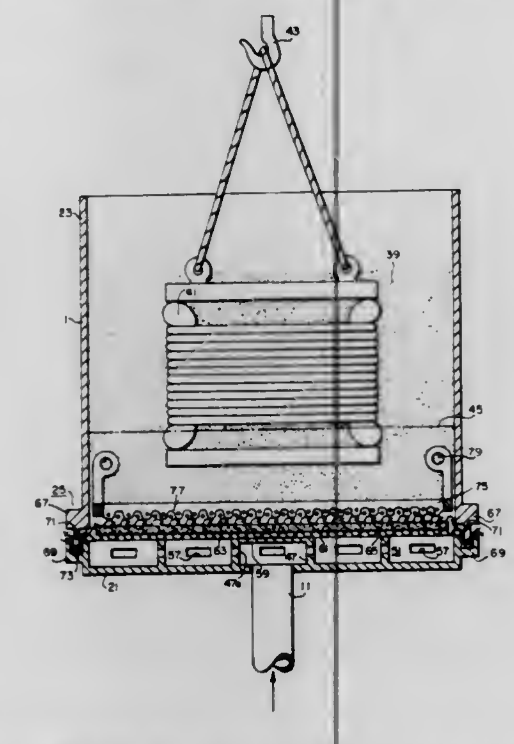

chamber for diffusing air substantially evenly over the cross-sectional area of the fluidized bed, at least one side of the felt pad being covered with a canvas, whereby the powdered resinous material is suspended substantially evenly across the fluidized bed.

4,063,533
MULTIPLE BRUSH DEVELOPER APPLYING APPARATUS WITH A TONER DIVERTER BLADE
Edward Montcalm White, Boulder, Colo., assignor to International Business Machines Corporation, Armonk, N.Y.
Filed Aug. 2, 1976, Ser. No. 710,758
Int. Cl.² G03G *15/09*
U.S. Cl. 118—658 10 Claims

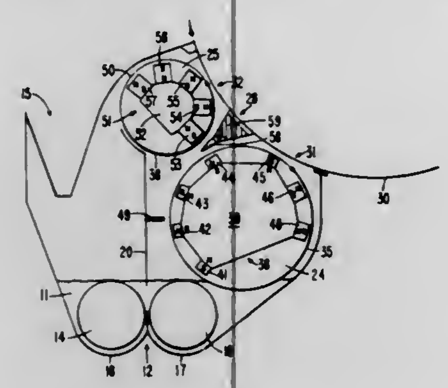

1. Apparatus for applying magnetically attractable toner carrying materials from a supply source to an area of a member containing a latent image requiring development comprising:
- a first magnetic brush having a movable element cooperative with a first magnet configuration for magnetically extracting and retaining toner carrying material from the supply source onto a surface of said element and for transporting said extracted material into intimate contact with a first portion of the latent image area;
- a second magnetic brush mounted adjacent said first brush and having a movable element cooperative with a second magnet configuration for magnetically retaining toner carrying material on a surface of said element and for delivering said retained materials into intimate contact with a second portion of the latent image area;
- means positioned between said first and second brushes for diverting a portion of the toner carrying materials from said first brush element surface to said second brush element surface for transport thereby to the second latent image area portion; and
- means selectably adjusting said diverting means for controlling the quantity of tone carrying materials transferred from said first brush to said second brush.

4,063,534
COAL-FIRED STEAM GENERATOR WITH HEATING SURFACES ABOVE THE FIRING OR COMBUSTION CHAMBER
Rudolf Kral, Bruninghof near Erlangen, Germany, assignor to Kraftwerk Union Aktiengesellschaft, Mulheim (Ruhr), Germany
Filed May 24, 1976, Ser. No. 689,569
Claims priority, application Germany, May 22, 1975, 2522724
Int. Cl.² F22B *37/24*
U.S. Cl. 122—510 3 Claims

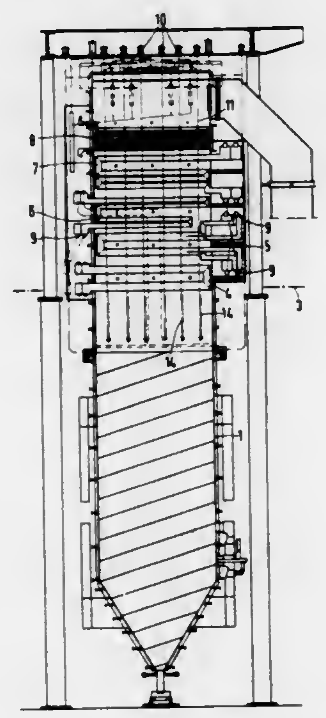

1. In a coal-fired steam generator wherein tubes forming heating surfaces are suspended above a firing chamber from support tubes that extend in a given direction and are mutually spaced apart, transversely to the longitudinal axis of the tubes forming the heating surfaces, a distance that is less than the mutual spacing of the support tubes in the direction of the longitudinal axis of the tubes forming the heating surfaces, the improvement therein comprising, an initial bend in a plane wherein the support tubes are mutually spaced apart by said lesser distance being formed in the support tubes located below the lowermost of the tubes forming the heating surfaces suspended therefrom, and further bends provided in the support tubes and forming auxiliary heating surfaces extending substantially perpendicular to the given direction in which said support tubes extend, the mutual spacing between said auxiliary heating surfaces formed from the support tubes being equal to the mutual spacing between the support tubes in direction of the longitudinal axis of the tubes forming the heating surfaces and suspended from the support tubes.

4,063,535
ROTARY PISTON INTERNAL COMBUSTION ENGINE
Dankwart Eiermann, Lindau, Germany, assignor to Wankel GmbH, Berlin, Germany
Filed Nov. 5, 1976, Ser. No. 739,112
Claims priority, application Germany, Nov. 28, 1975, 2553457
Int. Cl.² F02B *53/04*
U.S. Cl. 123—8.13 6 Claims

1. A rotary piston internal combustion engine having a housing with a two arc trochoidal cavity and a three sided piston for orbital and rotary movement in the cavity and a shaft supporting the piston, means for supplying a stratified charge to the cavity comprising first axially spaced and second axially spaced fuel-air inlets in said housing and controlled by said piston as the piston moves in the cavity, said first inlets supplying a lean mixture to said cavity and said second inlets supplying a rich mixture to said cavity, the positioning of said inlets being such that said first inlets open before said second inlets, first supply passage means connected to said first inlets and inclined in the direction of movement of the piston to supply

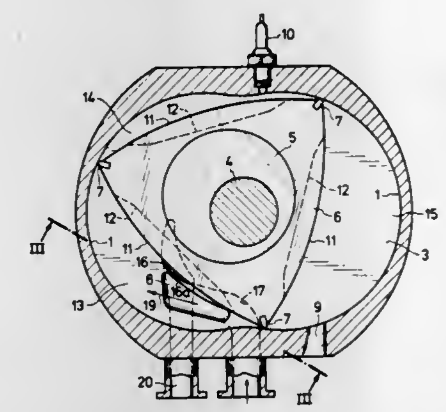

the lean mixture to the cavity near the axial ends of said piston, a circumferential groove formed in about the axial center of each side of the piston, second supply passage means connected to said second inlets and inclined in the direction of piston movement and toward the axial central region of the piston for the supply of the rich mixture to the cavity toward the axially central region of the piston and to the groove in the respective side of the piston, and ignition means positioned in the housing to ignite the rich mixture therein.

4,063,536
APPARATUS FOR FEEDING WATER INTO THE AIR/FUEL MIXTURE PASSAGE OF AN INTERNAL COMBUSTION ENGINE
Shougo Sanda, Okazaki; Tokuta Inoue, Mishima; Kiyohiko Oishi, and Toshio Yamada, both of Susono, all of Japan, assignors to Toyota Jidosha Kogyo Kabushiki Kaisha, Toyota, Japan
Filed May 17, 1976, Ser. No. 686,883
Claims priority, application Japan, Nov. 7, 1975, 50-133100
Int. Cl.² F02D *19/00*
U.S. Cl. 123—25 J 29 Claims

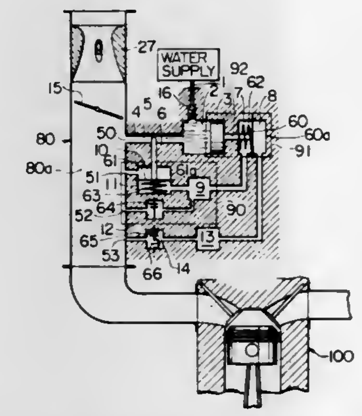

1. In an internal combustion engine utilizing an air/fuel mixing device, a combustion chamber and a mixture passage for conducting air/fuel mixture from the mixing device to the combustion chamber, water-feeding apparatus comprising:
- means for supplying water including a main conduit opening into the mixture passage;
- a biased valve member for controlling the flow of water from said water-supplying means by opening and closing said main conduit;
- means sensitive to a relatively abrupt increase in pressure in the mixture passage for actuating said valve member for opening said main conduit; and
- means for delaying the closing of said main conduit by said valve member under bias as said pressure in the mixture passage is decreased.

4,063,537
COMBUSTION CHAMBERS, FOR DIESEL ENGINES
Aurelio Lampredi, Turin, Italy, assignor to Fiat Societa Per Azioni, Turin, Italy
Filed Feb. 24, 1976, Ser. No. 660,888
Claims priority, application Italy, Mar. 21, 1975, 67710/75
Int. Cl.² F02B *3/00*
U.S. Cl. 123—32 B 3 Claims

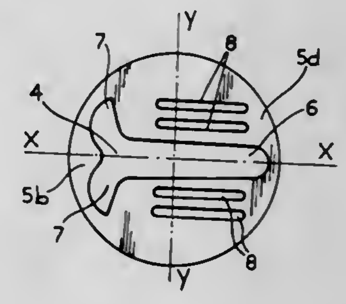

1. In a compression-ignition engine having a piston and a combustion chamber situated in the crown of the piston, the improvement wherein the combustion chamber is substantially anchor-shaped, with a central elongate channel extending along a diametrical axis of the piston crown, and wherein there is at least one pair of elongate grooves in the piston crown, parallel to and spaced from the said elongate channel on opposite sides of said channel, for the purpose of trapping gases escaping from the said central channel during combustion of gases therein.

4,063,538
IGNITION TIMING CONTROL METHOD AND APPARATUS
John David Powell, Menlo Park; Mont Hubbard, Davis, and Robert R. Clappier, Los Altos, all of Calif., assignors to The Board of Trustees of Leland Stanford Junior University, Stanford, Calif.
Filed Feb. 12, 1976, Ser. No. 657,443
Int. Cl.² F02P *5/10, 5/06, 5/08*
U.S. Cl. 123—117 R 4 Claims

1. Apparatus for controlling the timing of ignition of an internal combustion engine to accommodate variations in ambient conditions, said apparatus comprising means for sensing the angular position of peak cylinder pressure, means responsive to said position sensing means for producing a signal proportional to the angular deviation of the position of peak cylinder pressure from a preselected angular set point, said signal producing means including a first flip-flop responsive to said sensing means so as to be switched to a set state coincidentally with the angular position of the peak cylinder pressure, a second flip-flop arranged to be switched to a set state coincidentally with the angular position of the preselected set point, means ffor resetting said first and second flip-flops when both said flip-flops have been switched to the set state so that the duration at the earliest of said first and second flip-flops to set corresponds to the duration of the signal produced by said signal producing means, means for producing a signal level having a magnitude proportional to the duration of the set time of the earliest to set of said first and second flip-flops and to the identity of the earliest to set of said first and second flip-flops, and means responsive to said signal producing means for varying the time of ignition to restore the position of peak cylinder pressure to the set point, said ignition time varying means including means for initiating a linearly increasing signal at a fixed angular position before a top dead center position so that the magnitude of said linearly increasing signal is proportional to the angular engine position after said fixed angular position, means for comparing the magnitude of said linearly increasing

signal with the magnitude of the integral of said signal level, and means responsive to said comparing means for effecting ignition when the magnitude of said linearly increasing signal and said signal level integral coincide.

4. A method for controlling the spark advance in an internal combustion engine comprising the steps of continuously sensing the cylinder pressure to produce a pressure signal that varies with crank shaft rotation, producing a control signal

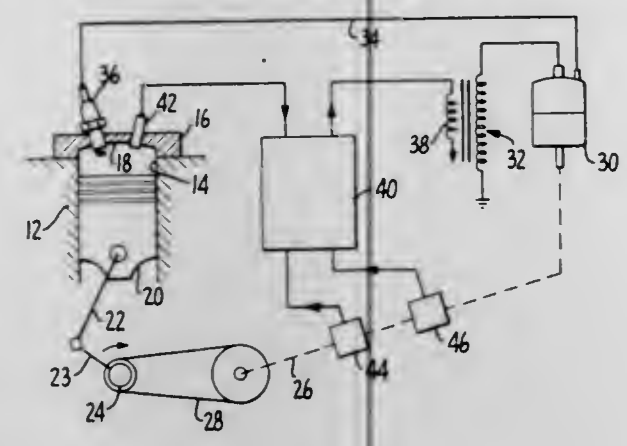

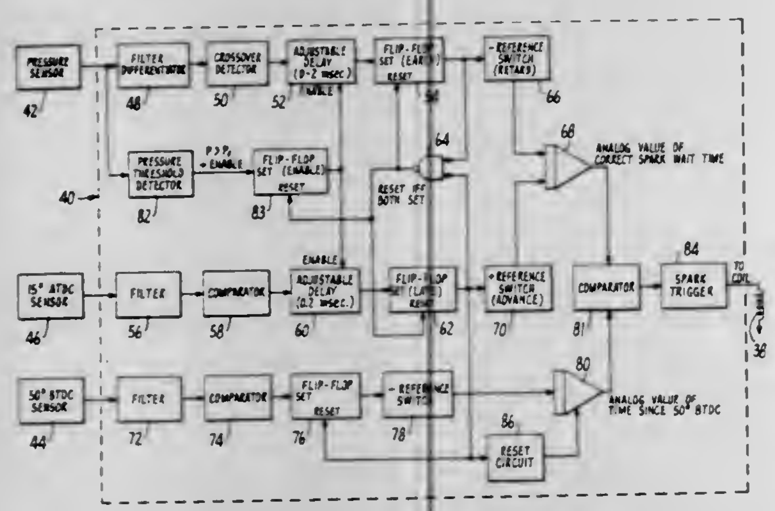

that crosses over from positive polarity to negative polarity when the pressure signal corresponds to the angular position of peak cylinder pressure, detecting the angular position of cross over, generating an angular signal at the angular position of peak cylinder pressure, comparing the angular signal with a preselected angular set point, and adjusting the angular position of engine ignition to reduce the deviation of the position of the angular signal from the set point.

4,063,539
SYSTEM TO CONTROL TIMING OF CYCLICALLY REPETITIVE EVENTS, PARTICULARLY AUTOMOTIVE IGNITION

Ingo Gorille; Wolfgang Borst; Winfried Klötzner; Karl Ott, all of Schwieberdingen; Heinz Möller, Stuttgart; Günter Hönig, Markgroningen; Uwe Kiencke, Ludwigsburg; Martin Zechnall, Schwieberdingen; Ulrich Flaig, Markgroningen; Alfred Schulz, Braunschweig, and Ernst-Olav Pagel, Freiberg, all of Germany, assignors to Robert Bosch G.m.b.H., Stuttgart, Germany

Filed Jan. 21, 1976, Ser. No. 650,971
Claims priority, application Germany, Feb. 6, 1975, 2504843
Int. Cl.² F02B *5/02*
U.S. Cl. 123—117 D **31 Claims**

24. System to control the timing of ignition pulses controlling the sparking of spark plugs in internal combustion engines, with respect to upper dead-center (UDC) position of respective pistons of the engine comprising

speed signal sensing means providing a speed output signal, and counter means (55, 30) providing sequentially counted pulses having a frequency representative of speed (*f*);

load signal sensing means (21) providing a load output signal, and counter means (47, 55) providing sequentially counted pulses having a frequency representative of loading on the engine;

an accumulator counter (26, 155) totalizing counted signals and providing an output pulse triggering the ignition when a selected count number is reached;

an address counter (22) connected to said counter means (55, 30; 55, 47) and providing an address in accordance with the count of the connected counter means;

a memory (23) addressed by the address counter (22) and storing characteristics of change in ignition angle with respect to at least one of: speed; load on the engine at selected addresses therein;

a transfer switch (25) having input terminals (36, 37) and a transfer terminal (39),

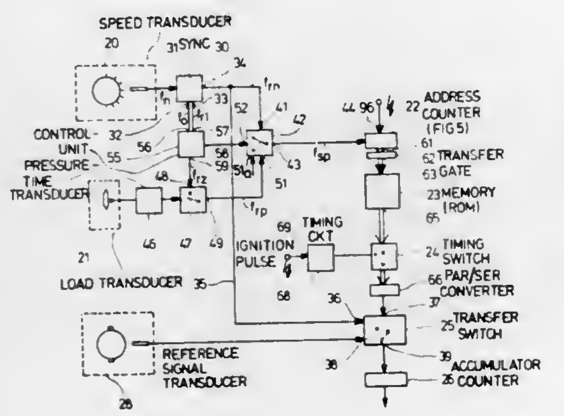

the sensing means (20, 21), the memory (23), one input terminal (37) of the transfer switch (25) and the address counter (22) being serially connected,

the transfer terminal (39) being connected to said accumulator counter (26, 155);

and connection means (35) between at least one of the counter means (30, 47) and the other input terminal (36) of the transfer switch (25) to shunt or bypass the counted signals across at least the memory (23) and apply the signals from one of said sensing means and the connected counter means directly to the accumulator counter (26, 155).

4,063,540
METHOD AND APPARATUS FOR FUEL RECOVERY IN INTERNAL COMBUSTION ENGINES

Antonino Pace, Turin, Italy, assignor to Fiat Societa per Azioni, Turin, Italy

Filed Jan. 28, 1976, Ser. No. 653,311
Claims priority, application Italy, Jan. 31, 1975, 67242/75
Int. Cl.² F02M *33/02*
U.S. Cl. 123—119 R **4 Claims**

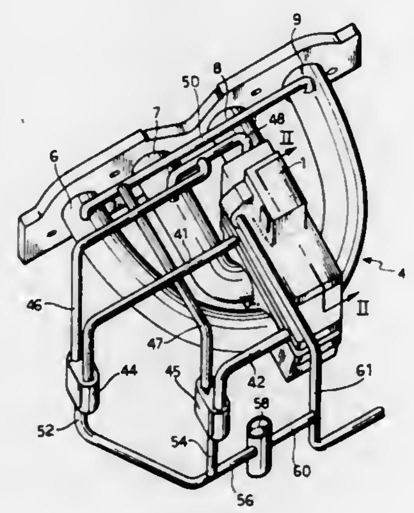

1. A fuel recovery device for a carburetor of an internal combustionengine comprising a down draft type carburetor having at least one vertical axis barrel, an intake manifold having a plurality of pipes adapted to be connected said engine,

a fuel collector disposed between said carburetor at the lower end of each barrel and said intake manifold for collecting fuel condensed in each barrel, expansion chamber means, first conduit means connected between each collector and said expansion chamber means for directing the collected fuel from each collector to said expansion chamber means, second conduit means connected to said expansion chamber means and said pipes for returning vapors from said collected fuel to said pipes and third conduit means leading from said expansion chamber means for returning said fuel for reuse, each collector comprising an annular groove at the lower end of each barrel defined by upper and lower coaxial frusto-conical walls with said lower wall being inclined to the vertical axis of the barrel by an angle in the region of 45° to 60° and said upper wall being inclined to the vertical axis of said barrel by an angle in the region of 10° to 20°.

4,063,541
CARBURETOR PROVIDING A UNIFORMLY ATOMIZED FUEL-AIR MIXTURE

Richard D. Landers, P.O. Box 1035, Wichita, Kans. 67201

Filed Apr. 9, 1976, Ser. No. 675,493
Int. Cl.² F02N *17/08, 17/28, 37/14*
U.S. Cl. 123—139 AW **12 Claims**

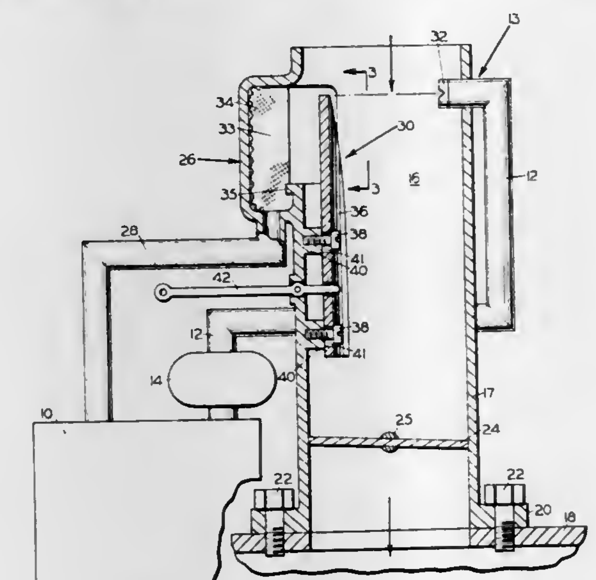

1. A carburetor for intermixing atomized fuel and air for delivery to an internal combustion engine, comprising:

a. an elongated passageway adapted for communication at one end with the intake of an internal combustion engine and at the opposite end with the atmosphere,
b. a throttle valve in the passageway for controlling the amount of air flow therethrough,
c. a fuel spray nozzle in the passageway communicating the passageway with a source of fuel under pressure and configured to inject fuel into the passageway in a generally flat spray pattern disposed substantially normal to the longitudinal axis of the passageway,
d. a bypass chamber communicating the passageway with the fuel source and arranged to capture any undeflected fuel spray injected into the passageway by the nozzle and return it to the fuel source, and
e. a fuel metering vane in the passageway between the nozzle and bypass chamber and arranged to allow fuel spray from the nozzle to enter the bypass chamber when there is no air flow in the passageway and to deflect variable portions of the fuel spray to the passageway by correspondingly variable amounts of air flow in the passageway.

4,063,542
ULTRASONIC LAPPING APPARATUS FOR DRAWING DIES

Yasukuni Uemura, Tokyo, Japan, assignor to Nissin Diamond Co., Ltd., Tokyo, Japan

Filed Nov. 19, 1975, Ser. No. 633,557
Claims priority, application Japan, Aug. 21, 1975, 50-101581
Int. Cl.² B28D *5/00*
U.S. Cl. 125—30 WD **3 Claims**

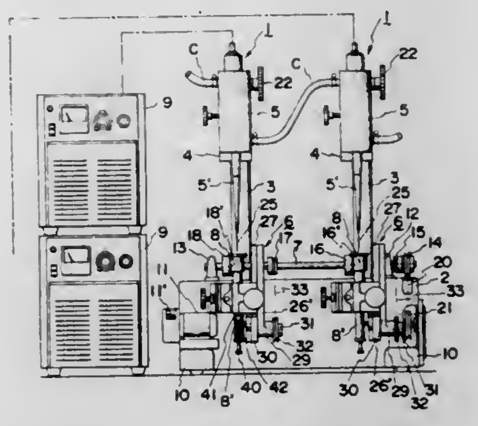

1. In ultrasonic lapping apparatus for finishing or reconditioning holes in drawing dies, the combination of:

a. an ultrasonic generator;
b. a transducer adapted to be excited by said ultrasonic generator to produce mechanical oscillations;
c. a lapping needle adapted to receive the mechanical oscillations from said transducer;
d. a turntable for supporting a die thereon, said turntable being arranged opposite to a tip of said lapping needle and being normally axially aligned therewith;
e. drive means for rotating said turntable about its central axis relative to said lapping needle;
f. rolling means for causing said turntable to roll about an axis passing through the die mounted thereon, said rolling means comprising:
   1. a swing arm pivotally supported at one end for swinging motion about the axis passing through the die on said turntable, said swing arm carrying said turntable; and
   2. means arranged adjacent another end of said swing arm for causing the swinging motion of same;
g. said means for causing the swinging of said swing arm comprises:
   1. a rotary disc;
   2. means for imparting rotation to said disc relative to said swing arm;
   3. a cam mounted on said disc; and
   4. spring means yieldably urging said other end of said swing arm into contact with said cam;
h. means for adjustably moving said turntable in either of two right-angular directions in a plane at right angles with said lapping needle for fine adjustment of the position of said turntable with respect to said lapping needle;
i. said adjustable moving means comprises:
   1. a supporting frame substantially integrally including a portion to which said swing arm is pivotally connected at said one end thereof;
   2. first spring support means supporting said supporting frame, said first spring support means being resiliently yieldable to permit movement of said supporting frame in one of said two right-angular directions relative to said lapping needle;
   3. first manually actuable means for adjustably moving said supporting frame in said one direction against the force of said first spring support means;
   4. second spring support means through which said turntable is mounted on said swing arm, said second spring support means being resiliently yieldable to permit

movement of said turntable in the other of said two right-angular directions relative to said swing arm; and
5. second manually actuable means for adjustably moving said turntable in said other direction against the force of said second spring support means;
j. said first and second support means each comprise a pair of leaf springs;
k. said turntable being coaxially provided with a shaft rotatable simultaneously therewith;
l. a bearing for rotatably supporting said shaft of said turntable;
m. said bearing having means for yieldably urging the die on said turntable against said lapping needle under adjustable pressure; and
n. said bearing including:
1. an outer sleeve, said turntable being carried by said swing arm via said outer sleeve;
2. an inner sleeve rotatably nested in said outer sleeve and formed substantially integral with said second pulley in coaxial relationship for simultaneous rotation therewith relative to said outer sleeve, said shaft of said turntable being inserted into said inner sleeve via said second pulley so as to be slidable axially relative to same;
3. spring means within said inner sleeve yieldably urging the die on said turntable against said lapping needle via said shaft of said turntable; and
4. means for adjustably varying the force of said spring means exerted on said shaft of said turntable.

4,063,543
SERVO TRACKING APPARATUS
John Henry Hedger, 1350 Hill St., El Cajon, Calif. 92020
Filed Aug. 12, 1976, Ser. No. 713,794
Int. Cl.² F24J *3/02;* **G03B** *21/00;* **G01J** *1/20*
U.S. Cl. 126—270 **12 Claims**

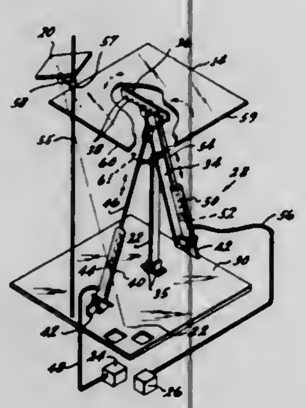

1. Apparatus for tracking any relative movement between a light source and a fixedly positioned object comprising:
a first and second target member;
a positionable reflector means for reflecting the light rays of the light source toward a first target member;
a fixedly positioned reflector means positioned intermediate said first target member and said positionable reflector for reflecting at least a portion of the light rays from the light source reflected by said positionable reflector means toward a second target when said first reflector means is correctly positioned;
sensor means for receiving said reflected light rays from the light source from said second reflector means when said reflected light rays from the light source are directed away from said first and second targets due to said relative movement, said sensor means increases in temperature when said reflected light rays from the light source are directed thereon; and
positioning means for moving said positionable reflector in response to a rise in temperature of sensor means in a direction and to the extent required for returning said reflected light rays toward the first and second target wherein the temperature of said sensor will be reduced and the movement of said positionable reflector means will substantially terminate until a predetermined degree of said relative movement is again detected.

4,063,544
SOLAR ENERGY COLLECTORS
Robert F. Bowen, Burlington, Mass., assignor to Raytheon Company, Lexington, Mass.
Filed Oct. 5, 1976, Ser. No. 729,737
Int. Cl.² F24J *3/02*
U.S. Cl. 126—270 **3 Claims**

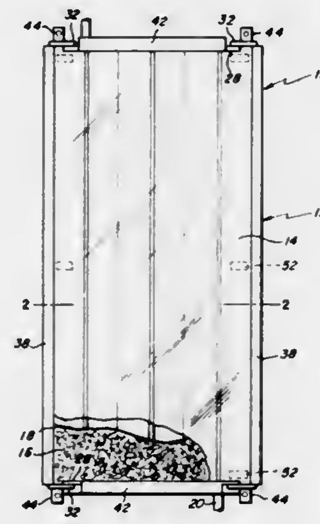

1. A solar energy collector comprising a rigid sheet-metal boxlike enclosure including a base and integral upstanding side and end walls, the upper edges of said walls having integral portions folded upon one another in spaced relation to provide a channel in their inner sides, a solar radiation transparent glazing mounted over the top of the enclosure with its peripheral edges supported within said channels, a layer of heat insulating material within the enclosure, and a solar radiation absorbing panel within the enclosure and disposed between the insulating layers and the glazing in spaced relation with the glazing, said base of the enclosure having outwardly directed elongated recesses therein and having integral mounting brackets projecting outwardly therefrom.

4,063,545
SOLAR COLLECTOR THERMOSTAT
William H. Hapgood, Concord, Mass., assignor to Raytheon Company, Lexington, Mass.
Filed Nov. 1, 1976, Ser. No. 737,879
Int. Cl.² F24J *3/02*
U.S. Cl. 126—271 **12 Claims**

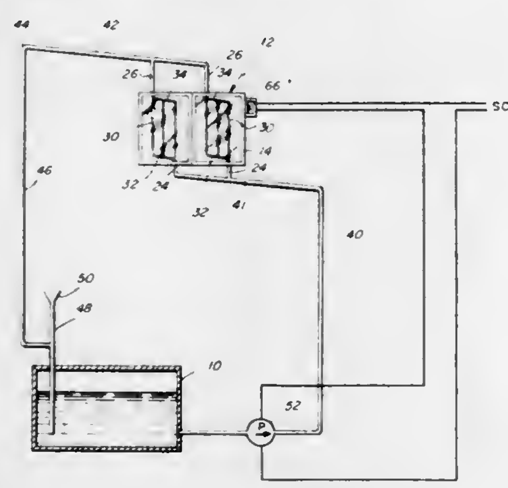

1. In a solar radiation collector having a radiationabsorbing panel with predetermined absorbing characteristics and piping means in thermally conductive relation with the panel for conducting fluid to be heated by thermal conduction from the panel, the combination therewith of a thermostat device comprising a thermostat having a surface area which possesses the same thermal absorpiton characteristics as the panel unaffected by the temperature of the fluid in the piping means.

4,063,546
HEAT STORE AND INSTALLATION FOR THE UTILIZATION OF SOLAR ENERGY
Rolf Schmid, Gelterkinden, and Ursula Kreibich, Riehen, both of Switzerland, assignors to Ciba-Geigy Corporation, Ardsley, N.Y.
Continuation of Ser. No. 680,303, April 26, 1976, abandoned. This application Jan. 13, 1977, Ser. No. 759,143
Claims priority, application Switzerland, Apr. 28, 1975, 5445/75
Int. Cl.² F24J *3/02;* **C09K** *3/18*
U.S. Cl. 126—271 **27 Claims**

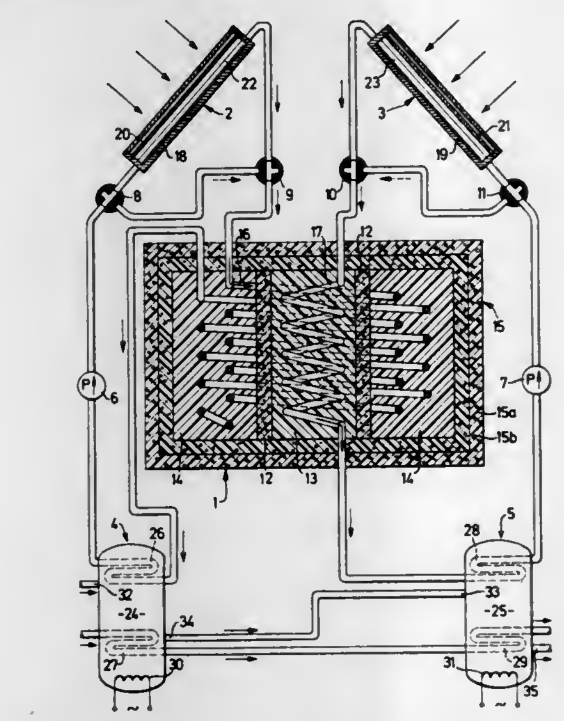

1. Heat accumulator which has a heat exchanger which is embedded in a crystalline substance and has a maximum operating temperature greater than the melting point of the crystalline substance, the crystalline substance being a crosslinked plastic and forming a moulding wherein the heat exchanger is integrated.

4,063,547
SOLAR HEATER
Henry Gruettner, 41 Valley Road, Levittown, Pa. 19057
Filed Dec. 16, 1975, Ser. No. 641,221
Int. Cl.² F24J *3/02*
U.S. Cl. 126—271 **6 Claims**

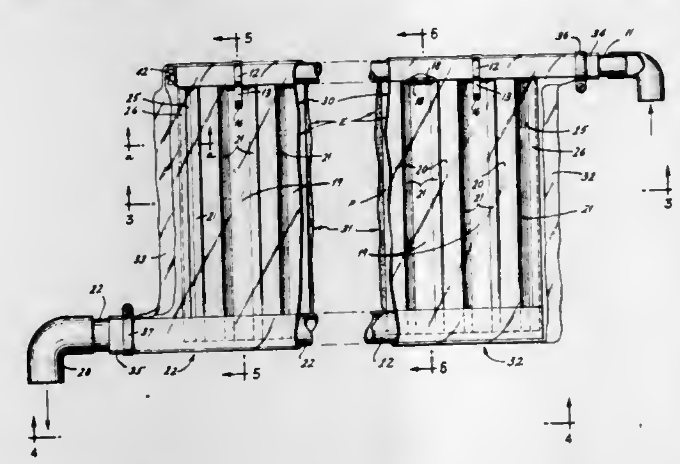

1. A solar heater including an inclined corrugated radiant-heat-absorbing panel, with the troughs of the corrugations extending between the upper and lower edge-zones of the panel, a liquid-supply pipe affixed to the upper edge-zone of the corrugated panel and having orifices therein in registration with the upwardly-facing open ends of the troughs of the corrugated panel, a liquid-discharge pipe extending along and affixed to the lower edge zone of the corrugated panel and communicating with the troughs thereof, and a flexible plastic envelope enveloping said pipes and the corrugated panel therebetween, including an upper and a lower plastic panel, of which at least the upper one is transparent, said envelope having the bottom, side and top marginal zones of its two panels sealed to each other and having a sleeve at the inlet thereof through which the supply pipe extends and to which it is sealed and having a sleeve at the outlet thereof through which the discharge pipe extends and to which it is sealed.

4,063,548
METHOD AND APPARATUS FOR MICTURITION ANALYSIS
William M. Klatt, Robbinsdale; Wayne H. Graves, Minnetonka, and Robert E. Buuck, Golden Valley, all of Minn., assignors to American Medical Systems, Inc., Golden Valley, Minn.
Filed Apr. 7, 1975, Ser. No. 566,044
Int. Cl.² A61B *5/10*
U.S. Cl. 128—2 R **17 Claims**

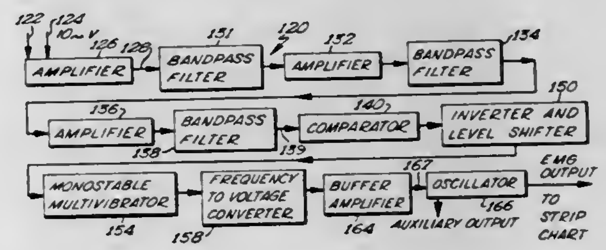

1. Electromechanical apparatus for diagnosing urinary bladder dysfunction comprising:
cystometry means for determing the presence or absence of a bladder detrusor reflex, said cystometry means comprising:
an elongated urinary catheter comprising a tubular, lumen portion having an input end and a bladder engaging output end with a discharge orifice therein for introducing pressurizing fluid into a patient's bladder;
fluid output supply means attached to said input end of said catheter; and
electronic means connected to said catheter and operative to generate a first electrical signal corresponding to interior bladder fluid pressure;
electromyography means for monitoring urethral sphincter electrical activity, said electromyography means comprising:
a pair of electrodes capable of sensing urethral sphincter electrical activity longitudinally spaced apart on the external surface of said catheter near said bladder engaging end thereof; and
electromyographic circuit means interconnected with said pair of electrodes for generating a second electrical signal corresponding to said urethal sphincter electrical activity; and
instrument means for simultaneously displaying said first electrical signal and said second electrical signal.

4,063,549
ULTRASONIC METHOD AND APPARATUS FOR IMAGING AND CHARACTERIZATION OF BODIES
Irwin Beretsky, New City, and Bernard Lichtenstein, Yorktown Heights, both of N.Y., assignors to Technicon Instruments Corporation, Tarrytown, N.Y.
Filed Dec. 22, 1975, Ser. No. 643,732
Int. Cl.² A61B *10/00*
U.S. Cl. 128—2 V **35 Claims**

1. In a method for the non-invasive examination of body parts through the selective ensonification of at least a portion of a body part with acoustical energy pulses to produce acoustical energy echo pulses, and the detection and processing of

said echo pulses to indicate the relative specific acoustic impedance of the thusly ensonified body part, the steps of, transforming said echo pulses from the time domain to the frequency domain throughout a predetermined frequency range, deconvolving said echo pulses in the frequency domain to

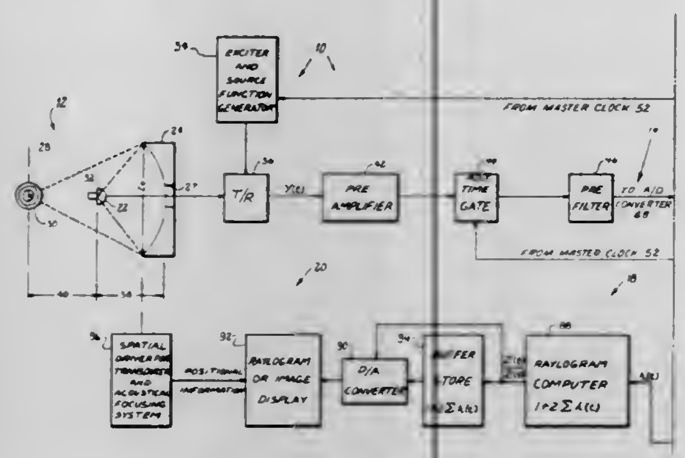

determine the impulse responses in the frequency domain of the ensonified body part at a plurality of frequencies within said frequency range, and determining the impulse responses of the ensonified body part in the time domain by transformation of said impulse responses from the frequency domain to the time domain.

4,063,550
METHOD AND APPARATUS FOR TREATING BRONCHIAL ASTHMA
Brian L. Tiep, 632 Norumbega Drive, Monrovia, Calif. 91016
Filed May 28, 1976, Ser. No. 690,850
Int. Cl.² A61B *5/00*
U.S. Cl. 128—2 R **4 Claims**

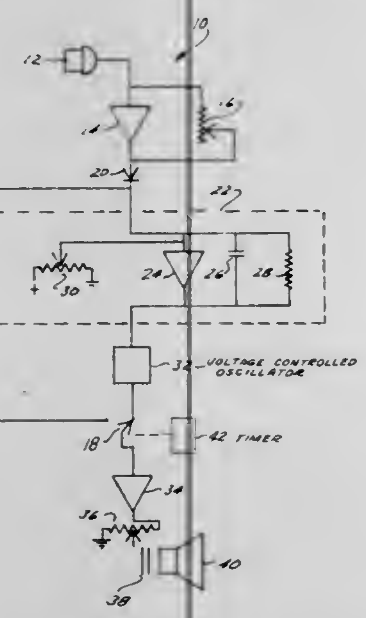

1. An apparatus for use in teaching an asthmatic patient to control his or her breathing so as to minimize the sound produced by the patient breathing which comprises:
microphone means for receiving sound, said microphone means being adapted to be located adjacent to the trachea of a patient,
means for providing a variable frequency response in accordance with an amplitude of the signal from said microphone means,
said means for providing a variable frequency response including means for providing a DC voltage which follows the peak value of a signal from said microphone means, said means for providing a DC voltage being connected to said microphone means,
means for varying the frequency of a signal produced by said means for providing a frequency response,
speaker means for providing an audible response corresponding to a variable frequency response,
voltage controlled oscillator means being connected to said means for providing a DC voltage and to said speaker means, and
switch means permitting said speaker means to be connected to either said microphone means or to said voltage-controlled oscillator means.

4,063,551
BLOOD PULSE SENSOR AND READOUT
James Stevens Sweeney, Laguna Beach, Calif., assignor to Unisen, Inc., Irvine, Calif.
Filed Apr. 6, 1976, Ser. No. 674,113
Int. Cl.² A61B *5/02*
U.S. Cl. 128—2.05 P **21 Claims**

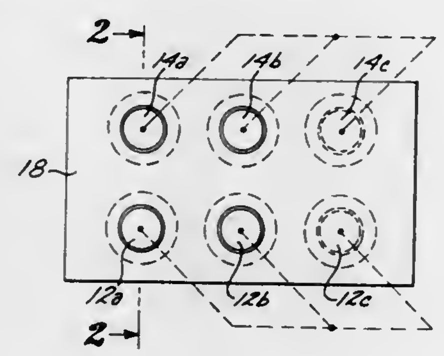

1. A blood pulse sensor comprising:
means for emitting an infra-red light toward a blood vessel, said light having a wavelength over 9,000 angstroms, thereby insuring its high absorption in the bloodstream constituents; and
means for monitoring the relative absorption of said light in the bloodstream to indicate the timing of blood pulses.

4,063,552
USER FORMED MOUTHGUARD
Robert E. Going, J. Hillis Miller Health Center, College of Dentistry University of Florida, Gainesville, Fla. 32610; Ronald E. Loehman, 964 N. California Ave., Palo Alto, Calif. 44303, and Ming Sam Chan, Dept. of Heath & Rehabilitative Services, Office of Laboratory Services, P.O. Box 210, Jacksonville, Fla. 32201
Filed Apr. 2, 1976, Ser. No. 673,298
Int. Cl.² A61F *5/56*
U.S. Cl. 128—136 **7 Claims**

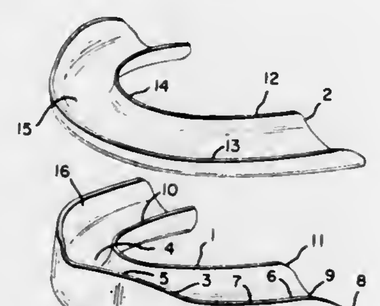

1. Tray means for holding a mass of dough-like uncured silicone material in the shape of a rod bent into a U shape while forcing the upper teeth into such mass and thus forcing the inner, outer and lower surfaces into conforming contact with the whole inner trough-defining surface of such tray means, said tray means comprising two separable troughed portions, one of which has an inner surface in such contact with at least approximately one half of the total of such inner, outer and lower surface area, and the other of which includes an exposed outer surface and is separately movable away from such first portion and from such mass without disturbing such contact between said mass and said inner surface of said first portion.

4,063,553
PRESSURE TRANSDUCING METHODS AND APPARATUS
Herbert Karsh, Laguna Beach, Calif., assignor to Bell & Howell Company, Chicago, Ill.
Filed Apr. 8, 1976, Ser. No. 674,719
Int. Cl.² A61M *5/00*; A61B *5/02*
U.S. Cl. 128—214 F **18 Claims**

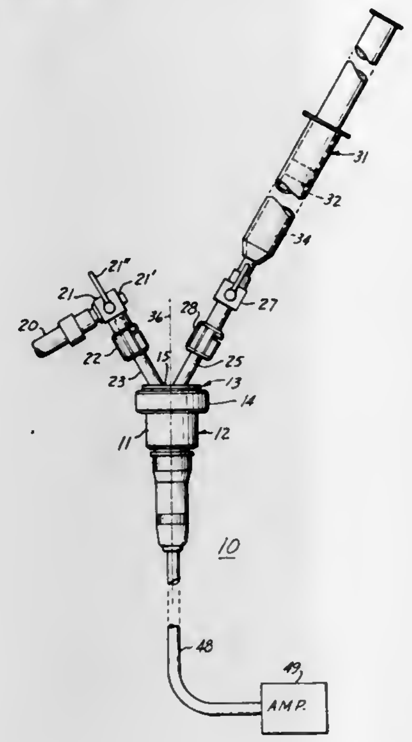

14. In apparatus for handling a compatible solution relative to a circulatory system of a living organism with the aid of a catheter insertible into said circulatory system, the improvement comprising in combination:
means for receiving said solution having a circular cavity enclosed by a circular wall portion;
means connected to said receiving means for coupling said catheter to said circular cavity at a first predetermined location;
means connected to said receiving means for injecting said compatible solution into said cavity at a second predetermined location situated at a distance from and to one side of a diametrical plane through said circular cavity and said first location for rotating said injected compatible solution in said circular cavity in a whirl sweeping all regions of said circular cavity and having a peripheral portion encompassing a central axis of said circular cavity and proceeding along said circular wall portion.

4,063,554
SINGLE NEEDLE ALTERNATING FLOW BLOOD PUMP SYSTEM
Charles B. Willock, 16222 SE. Oatfield Road, Milwaukie, Oreg. 97222, and Roger E. Wood, 1101 Jefferson St., Oregon City, Oreg. 97045
Continuation of Ser. No. 521,502, Nov. 6, 1976, abandoned. This application Apr. 16, 1976, Ser. No. 677,722
Int. Cl.² A61M *1/03*
U.S. Cl. 128—214 R **8 Claims**

1. A single passage blood pump system for alternate removal of blood from and return of blood to said single passage, said system comprising:
a blood flow loop communicating with said passage at ends thereof for withdrawing blood from said single passage and returning blood to said single passage, said loop including a blood pump for producing a flow of blood in said loop,
a valve means distinct from said pump and positioned in said loop between the outflow side of said blood pump and said single passage,
blood receiving means also in said blood flow path through which blood is circulated by said blood pump for subsequent return to said single passage, said blood receiving means being positioned between the outflow side of said blood pump and said valve means,
and timing means coupled in control relation to said blood pump and said valve means and operable independently of the pressure in the system,
said timing means engaging said valve means on a substantially periodic basis independent of the pressure in the system to prevent the return of blood to said single pas-

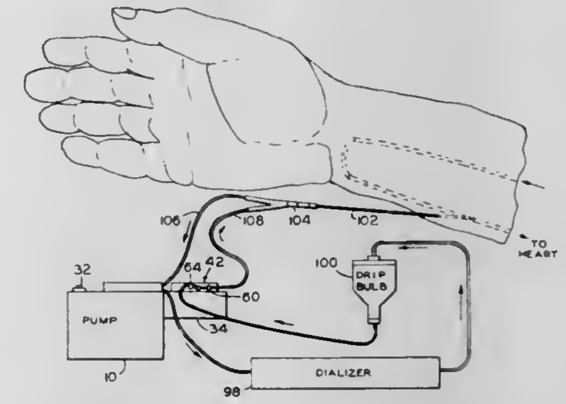

sage from said blood receiving means and at substantially the same time causing said pump to be energized to pump blood from said single passage toward said blood receiving means, said timing means also disengaging said valve means on a substantially periodic basis independent of the pressure in the system to permit the return of blood to said single passage from said blood receiving means and at substantially the same time causing said pump to be deenergized to prevent the flow of blood from said single passage toward said blood receiving means.

4,063,555
CANNULA ASSEMBLY
Bjorn Ulinder, Saltsjoduvnas, Sweden, assignor to Aktiebolaget Stille-Werner, Stockholm, Sweden
Filed Jan. 22, 1976, Ser. No. 651,483
Claims priority, application Sweden, Jan. 24, 1975, 7500773
Int. Cl.² A61M *5/14*
U.S. Cl. 128—214 R **10 Claims**

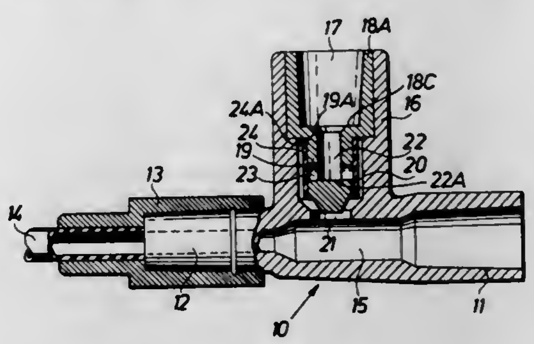

1. A cannula for administration of two fluids from two separate sources of fluid supply comprising, in combination, a housing; a fluid flow passage therethrough having first and second fluid inlets and one fluid outlet, at least one of the fluid inlets being socket-shaped and having an opening leading thereinto, side walls, and an end wall in alignment with the opening, to receive therewithin needle delivery means of a needle-tipped syringe for delivery of one of the fluids to the cannula fluid flow passage; and of a short enough depth so that the needle delivery means can impact against an end wall of the socket; an opening through a side wall of the one fluid inlet; and a check valve on the other side of the socket side wall and extending across the opening in the side wall, compelling flow therethrough only in the inward direction; the end wall of the one fluid inlet being in alignment with the socket opening accepting any impact of the delivery means when inserted in

the socket opening and inhibiting impact injury to the check valve upon such insertion.

4,063,556
VACUUM CURETTAGE DEVICE

Michael D. Thomas, Arab, Ala., and Francis E. Ryder, Barrington, Ill., assignors to Ryder International Corporation, Schaumberg, Ill.
Filed Apr. 14, 1976, Ser. No. 676,759
Int. Cl.[2] A61M *1/00;* **A61B** *17/22;* **G01D** *13/00;* **F16K** *1/20*
U.S. Cl. 128—276 **12 Claims**

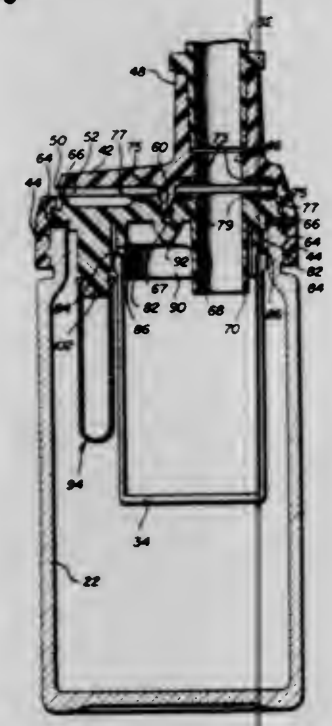

1. An indicator for providing a visual indication as to the presence of a vacuum within a sealed vessel, or the like, said indicator including a tubular element having an open end and a closed end, said tubular element having a cross-section which defines first and second oppositely disposed exterior surfaces, said first surface being substantially smooth, said second of an irregular configuration, said first surface having an effective length, in the relaxed condition, which is greater than the effective length of said second surface in the relaxed condition, the actual length of said second surface, taking into account the irregularities formed therein being greater than that of said first surface, such that said tubular element may be assembled to a post or the like, positioned interiorly of a vessel to be evacuated by engagement of said open end over said post to trap a quantity of air within said element, said tubular element assuming a first orientation when in the relaxed condition, such that upon the creation of a vacuum within a vessel, the air trapped within the tubular element will tend to expand said element such that the differences in the acutal length of said first and second surfaces will produce movement of the element to a second orientation indicating the presence of a vacuum within the said vessel, with the degree of movement depending upon the level of the evacuation existing in the vessel.

4,063,557
ULTRASONIC ASPIRATOR

David G. Wuchinich; Alan Broadwin, and Robert P. Andersen, all of New York, N.Y., assignors to Cavitron Corporation, New York, N.Y.
Filed Apr. 1, 1976, Ser. No. 672,814
Int. Cl.[2] A61M *1/00;* **A61B** *17/00*
U.S. Cl. 128—276 **12 Claims**

1. Apparatus for surgically removing tissue comprising in combination
a handpiece,
a resonant vibrator mounted in said handpiece, said vibrator comprising a transducer for converting electrical excitation to mechanical vibrations, a connecting means fixedly attached to the anterior end of said transducer for transmitting and modifying the vibrations, and a tool at the other end of said connecting means,
electrical excitation means mounted in said handpiece adjacent said transducer for inducing ultrasonic vibrations in said transducer,

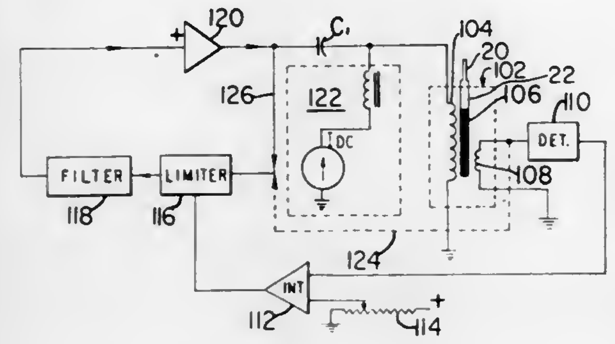

generator means for powering said electrical excitation means, and
control means responsive to said transducer means output for adjusting and controlling the output of said generator means by varying the frequency of said ultrasonic vibrations.

4,063,558
ARTICLE AND METHOD FOR MAKING HIGH FLUID-HOLDING FIBER MASS

Frederick R. Smith, Wilmington, Del., assignor to Avtex Fibers Inc., Valley Forge, Pa.
Continuation-in-part of Ser. No. 629,952, Nov. 7, 1975, and Ser. No. 696,451, June 15, 1976. This application Nov. 12, 1976, Ser. No. 741,173
Int. Cl.[2] A61F *13/20*
U.S. Cl. 128—284 **12 Claims**

1. An article of manufacture comprising a highly fluid absorbent mass of alkaline alloy fibers comprising a matrix of regenerated cellulose and an alginic acid salt of alkali-metals dispersed therein, said salt being present in an amount of at least about 5 weight percent based on the weight of the cellulose.

4,063,559
DISPOSABLE DIAPER HAVING STRETCHABLE ADHESIVE TAB FASTENERS WITH PARTIBLE PROTECTIVE FILM

Ludwig Tritsch, Wilmette, Ill., assignor to Johnson & Johnson, New Brunswick, N.J.
Filed Oct. 4, 1976, Ser. No. 729,332
Int. Cl.[2] A61F *13/16*
U.S. Cl. 128—287 **8 Claims**

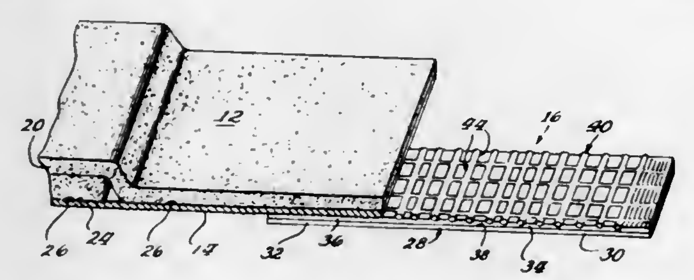

1. A disposable diaper having a facing sheet defining a diaper inside surface for direction toward an infant, a moisture-imprevious backing sheet substantially coextensive with said facing sheet and defining a diaper outside surface, an absorbent panel positioned between said facing sheet and said baking sheet, and a pair of stretchable adhesive tab fasteners each comprising:
an elongated tape segment having a fixed end secured to said diaper along a longitudinal margin thereof and an extendible free end;
a pressure-sensitive adhesive layer on one face of said free end;

a means for providing a substantially continuous cover for said free end adhesive when said tab is in its storage position and exposed adhesive when said tab is in its extended working position comprising
a partible protective cover means substantially coextensive with and permanently adhered to said pressure-sensitive adhesive layer on said free end when said free end is in a non-extended storage position;
said free end and said adhesive layer being extendible together from the storage position to a working position in which said protective cover means is parted and a portion of said pressure-sensitive adhesive layer is exposed for securing said diaper about an infant.

4,063,560
CRYOSURGICAL INSTRUMENT

Ernest Hilton Thomas, Collingbourne Kingston, near Marlborough, and Humphry Robert Evatt, Andover, both of England, assignors to Spembly Limited, England
Filed Apr. 5, 1976, Ser. No. 674,032
Claims priority, application United Kingdom, Apr. 22, 1975, 16595/75
Int. Cl.[2] A61B *17/36*
U.S. Cl. 128—303.1 **19 Claims**

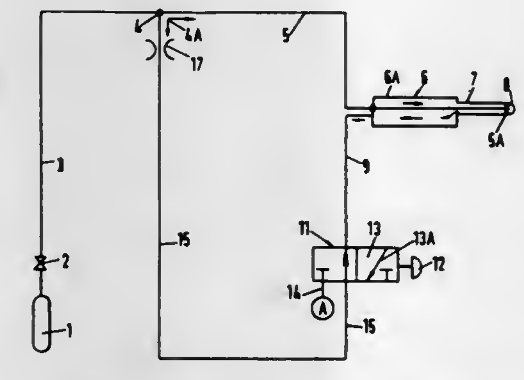

1. In a cryogenic instrument of the type having selective cooling and warming modes of operation and in which fluid from a pressurized source is fed to a cavity of a probe through a first duct and through first restriction means in the probe to produce a pressure-drop resulting in the required cooling of a wall of the cavity during the cooling mode, a second duct for connecting a source of pressurized fluid to said cavity separately from said first duct and said first restriction means during the warming mode, said second duct having associated therewith second restriction means for controlling the flow of fluid through said second duct during the warming mode, and valve means for selectively connecting said first duct to said cavity during the cooling mode to produce said pressure drop and for connecting both said ducts to the cavity during the warming mode to pressurize the cavity and produce condensation therein, the flow impedance of the first and second restriction means being so related as to control the relative flows of fluid into the cavity via said ducts during the warming mode.

4,063,561
DIRECTION CONTROL DEVICE FOR ENDOTRACHEAL TUBE

Roger DeSalvo McKenna, Los Angeles, Calif., assignor to The Signal Companies, Inc., Beverly Hills, Calif.
Continuation-in-part of Ser. No. 607,270, Aug. 25, 1975, abandoned. This application Sept. 20, 1976, Ser. No. 724,284
Int. Cl.[2] A61M *25/00;* **A61B** *17/52*
U.S. Cl. 128—351 **9 Claims**

1. An endotracheal intubation device comprising:
a. a flexible non-metallic tubular member with an open end tapered for insertion into a patient's trachea,
b. flexible means embedded in the wall of the tapered end of said tubular member for rendering said end magnetically responsive; and
c. a magnetic device externally positionable over the throat of said patient proximate to the tracheal orifice and adapted to displace said magnetically responsive end

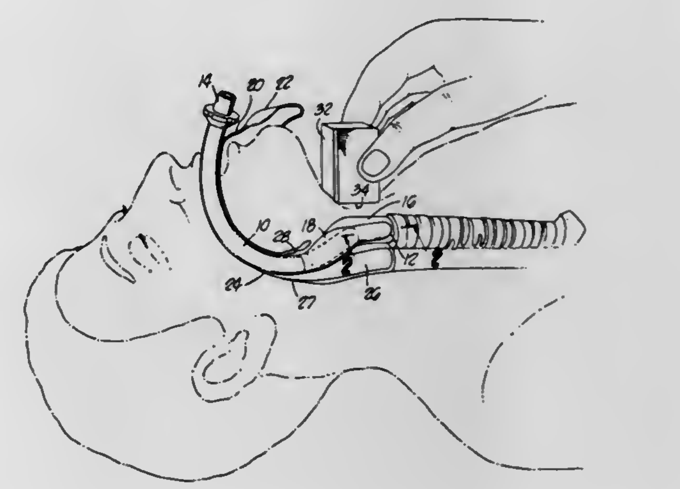

forward over the tracheal orifice as said tubular member is inserted through said patient's throat.

4,063,562
PODIATRIC INSOLE

Henry M. Smith, 8575 Main St., Williamsville, N.Y. 14221
Filed Oct. 15, 1976, Ser. No. 732,709
Int. Cl.[2] A43B *7/14*
U.S. Cl. 128—594 **5 Claims**

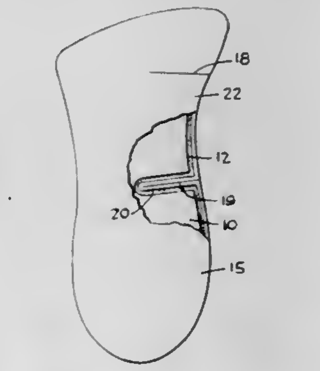

1. A podiatric insole conforming generally in outline to at least a portion of the wearer's foot including the central arch portion thereof, said insole comprising an upper wall adapted to engage against the under side of the wearer'foot and a lower wall connected along its margin to said upper wall to form a closed envelope, said envelope containing a flowable cushioning material, said envelope having slit means at said medial side extending inwardly thereof to provide a portion which is adapted to curve upwardly against the medial side of the arch of the wearer, the upper and lower walls of said envelope being connected along the opposite edges of said slit means to form a closed envelope.

4,063,563
METHOD AND APPARATUS FOR BUILDING A TOBACCO FILLER

Heinz-Christen Lorenzen, Hamburg, Germany, assignor to Hauni-Werke Korber & Co., KG, Hamburg, Germany
Filed Oct. 5, 1976, Ser. No. 729,694
Claims priority, application Germany, Oct. 10, 1975, 2545416
Int. Cl.[2] A24C *5/18*
U.S. Cl. 131—21 D **10 Claims**

1. A method of building a tobacco filler, comprising the steps of feeding particles of tobacco into a first portion of an elongated path; transporting the particles along said path whereby the particles which enter said first portion of said path

form a growing tobacco stream and the resulting fully grown tobacco stream advances beyond said first portion of said path; removing tobacco from said fully grown stream in a second portion of said path to thereby convert said fully grown stream into said filler; monitoring the quantity of tobacco in successive increments of said stream; monitoring the quantity of tobacco

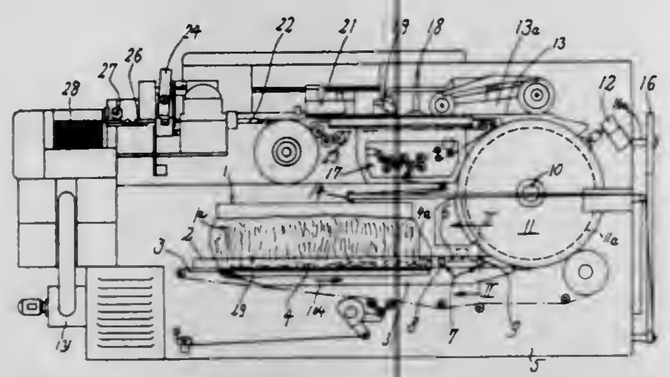

in said filler; producing first and second signals which are respectively indicative of the monitored quantities of tobacco in said stream and said filler; producing third signals which are indicative of the quotient of said first and second signals; and utilizing said third signals for regulation of tobacco feed into said first portion of said path.

4,063,564
VIBRATORY CLEANING AND COATING SYSTEM
Theodore R. Francis, 855 Richard St., Aurora, Ill. 60504
Filed Aug. 30, 1976, Ser. No. 719,070
Int. Cl.² B08B *3/04*
U.S. Cl. 134—66 **19 Claims**

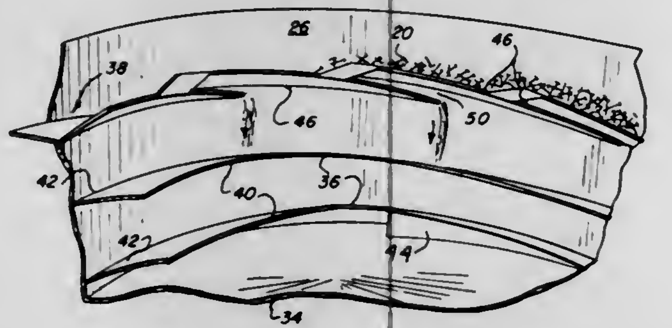

1. Apparatus for treating a plurality of articles adapted to be moved upwardly along a track in a bowl toward an article outlet from the bowl, the improvement comprising, in combination: said track extending inwardly from the wall of said bowl, said track being helically shaped and being substantially cantilevered supported from the wall of said bowl, said helical track comprising a series of spaced apart extending in sequence toward said article outlet, with the spaced apart portions of preceding segments of said series overlapping the spaced apart portions of succeeding segments of said series and with the overlapping portions of the preceding segments being spaced from the wall of said bowl.

4,063,565
APPARATUS FOR WASHING AND/OR TREATING POTATOES AND OTHER SUCH FRUITS AND VEGETABLES
Dalma Therman Edwards, and C. Gene Strickland, both of Spring Hope, N.C.
Filed Jan. 29, 1976, Ser. No. 653,363
Int. Cl.² B08B *3/04*
U.S. Cl. 134—104 **16 Claims**

1. An apparatus for washing and/or treating material such as fruits, vegetables, and the like comprising: a container structure including bottom and side walls and adapted to hold a volume of fluid therein whereby said container is structured such that the material received therein is generally in contact with the fluid within said container structure; paddle wheel means rotatively mounted within said container structure and cooperable with an adjacent support means for engaging material within said container being washed and/or treated and generally urging said material to move between said paddle wheel means and said support means and lifting said material from said container and the fluid therein such that said material generally moves upwardly between said paddle wheel means and said support means to where the same is deposited outwardly of said containiner structure where the material is received; drive means for rotatively driving said paddle wheel means such that the material within the container may be moved from said container structure; said paddle wheel means and said cooperable support means extending substantially across an exiting end portion of said container structure, and wherein said paddle wheel means includes a shaft rotatively mounted across said container structure and operatively connected to said drive means whereby said drive means is operative to rotatively drive said shaft; a pair of end plates fixed to opposite portions of said shaft and disposed generally interiorly of the side walls of said container structure; a transverse

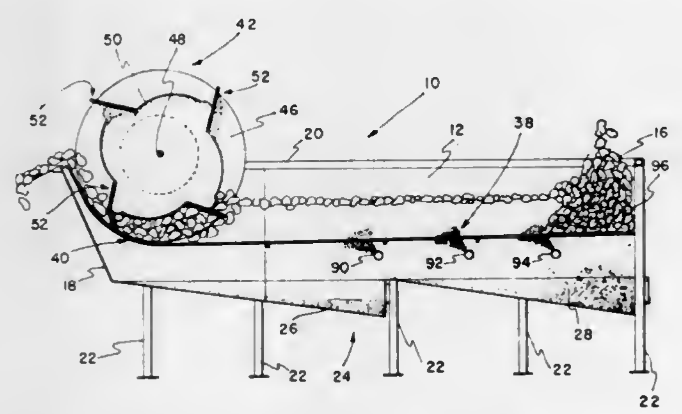

finger support assembly extending between said end plates and radially spaced from said shaft; and a plurality of finger means generally circumferentially spaced about said finger support assembly and extending therefrom for engaging material being discharged from said container structure; said support means cooperable with said paddle wheel means for discharging material from said container structure extending generally under said paddle wheel means and curves generally upwardly adjacent said exiting end portion of said container with the curved portion thereof being generally radially spaced relative to said transvese finger support assembly of said paddle wheel means such that material may pass between said finger support assembly and said support means as said paddle wheel means is driven; and wherein said finger means extending from said paddle wheel means are of a distance sufficient enough to engage a portion of said cooperable support means during a portion of each revolution of each paddle wheel means, and wherein said finger means are comprised of a flexible material means that yield in a bending fashion as said finger means contacts and engages portions of said cooperable support means as said paddle wheel means is driven.

4,063,566
TENT WITH PORTABLE DISASSEMBLABLE MODULAR ELEMENTS
Bruno Millerioux, 71 rue Montorgueil, Paris, France (75002)
Filed Mar. 17, 1976, Ser. No. 667,562
Claims priority, application France, Sept. 26, 1974, 74.32393; Dec. 22, 1975, 75.39327
Int. Cl.² A45F *1/00;* **E04B** *1/347*
U.S. Cl. 135—1 R **21 Claims**

1. A portable tent comprising at least three substantially similar modules made of a flexible web material, each module comprising (i) two generally quadrilateral side wall portions of identical respective shapes and dimensions and (ii) a substantially triangular end wall portion having two rising edges and

a lower edge, the side wall portions of each module having a top edge spaced from the ground when the tent is erected, said top edge extending between an outer top end and an inner top end thereof, each side wall portion further having a bottom edge extending between an inner bottom end and an outer bottom end thereof, the bottom edges of each module being parallel and located adjacent the ground when the tent is erected, each side wall portion also having an outer rising edge extending between said outer top end and said outer bottom end thereof, and an inner rising edge extending between said inner top end and said inner bottom end thereof, the respective top edges of the two side wall portions of every module being coextensively and permanently connected to each other to form a common top edge, the outer rising edges of said side

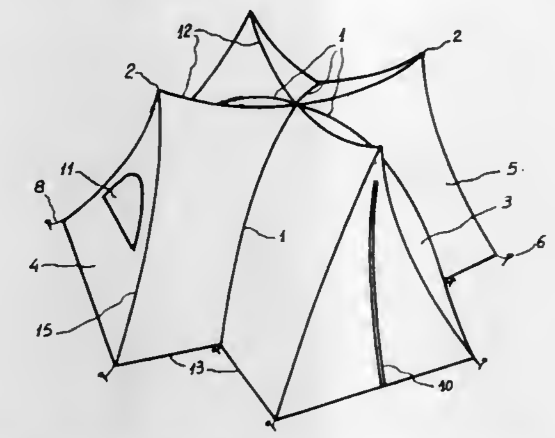

wall portions of each module being coextensively and permanently connected to respective rising edges of the associated triangular end wall portion, the inner rising edge of one of the side wall portions of each module being coextensively and permanently connected to an inner rising edge of one side wall portion of an adjacent module and the inner rising edge of the other side wall portion of each said module being coextensively and permanently connected to the inner rising edge of one side wall portion of another adjacent module, the common top edges of all of said modules meeting at the inner top ends thereof to define a symmetrical enclosure, said tent further comprising a plurality of substantially rigid elongated supporting means, each means supporting one of said outer top ends when said tent is erected, a portion of each of said supporting means being adapted to rest on the ground.

4,063,567
TENT PEG
Claude Martin, R.R. No. 2, Garthby, and Real Martin, 1206 St. Louis Street, Thetford Mines, both of County of Frontenac, Quebec, Canada
Filed Sept. 29, 1975, Ser. No. 617,533
Claims priority, application United Kingdom, Oct. 3, 1974, 42899/74
Int. Cl.² A45F *1/16*
U.S. Cl. 135—15 PE **5 Claims**

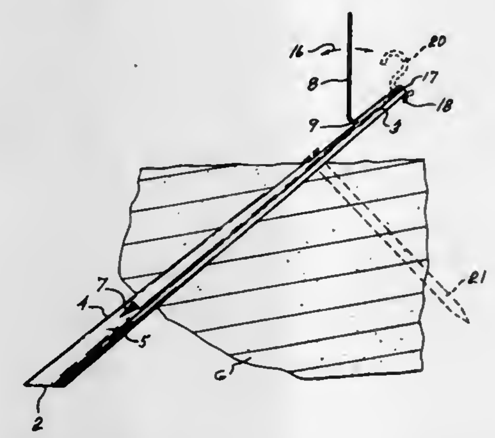

1. A tent peg comprising an elongated rigid body adapted to be angularly driven into the ground and having a lower pointed end and a flat upper end, the latter serving to hammer said body into the ground, a straight short branch secured to, and joining with, said body in a zone spaced below said upper end and proximate said upper end, said branch making an obtuse angle with the portion of said body located below said zone, said branch adapted to be vertically and upwardly directed when the body is angularly positioned in the ground, so as to be inserted in the open tubular lower end of a tent-supporting post to prevent lateral displacement of said post lower end, said branch having an upper end portion provided with a transverse bore for receiving a pin extending through transversely aligned holes made in said tubular lower end of said post to lock said post against upward movement.

4,063,568
VALVE
Gleb Borisovich Sosulnikov, Zverinetskaya ulitsa, 14, kv. 14; Vladimir Mikhailovich Fomichev, Tashkentskaya ulitsa, 18, korpus 2, kv. 145; Ljudmila Alexandrovna Tsiporina, Strelbisdensky pereulok, 25a, kv. 32; Mikhail Prokhorovich Selivanov, Leningradskoe shosse 49-51, kv. 38, korpus 1; Lev Vladimirovich Bobrakov, Christoprudny bulvar, 14, kv. 56; Alexandr Sergeevich Axenov, Ivovaya ulitsa 7, kv. 32; Dmitry Vladimirovich Alexandrov, Profsojuznaya ulitsa, 46, korpus 5, kv. 33, all of Moscow, U.S.S.R.; Maxim Semenovich Ugrjumov, deceased, late of Moscow, U.S.S.R.; by Raida Nikolaevna Ugrjumova, administratrix, ulitsa Demyana Bednogo, 1, korpus 2, kv. 52, Moscow, U.S.S.R.; by Nikolai Maximovich Ugrjumov, administrator, ulitsa Demyana Bednogo, 1, korpus 2, kv. 52, Moscow, U.S.S.R., and by Lidia Maximovna Tjumina, administratrix, ulitsa Demyana Bednogo, 1, korpus 2, kv. 52, Moscow, U.S.S.R.
Continuation of Ser. No. 639,623, Dec. 10, 1975, abandoned.
This application Sept. 21, 1976, Ser. No. 725,293
Int. Cl.² F16K *11/04*
U.S. Cl. 137—270 **7 Claims**

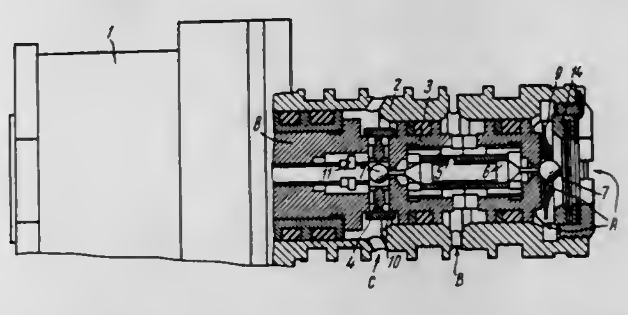

1. A ball-type valve intended for installation in hydraulic systems and comprising: a body with an essentially cylindrical inner space; two identical sockets installed coaxially in the body and provided with central holes in their bottoms the circular edges of the holes forming valve seats; ball closing elements co-operating with the seats with a possibility of valving them; annular seals mounted on the sockets and dividing the valve body into three chambers consisting of an inlet chamber for receiving a fluid under pressure, an outlet chamber communicating with the output element, and a return chamber for draining the fluid from the output element; a drive with a rod adapted to actuate the closing elements to open or close the valve; a pushrod installed along the axis of the valve body and intended to transmit motion from the rod to the closing elements; guides for the pushrod, made in the sockets.

4,063,569
TRACT-TAILORED CONTROL MEANS AND METHOD FOR CENTER-PIVOT IRRIGATION APPARATUS
Theodore V. Olson, and Carroll G. Olson, both of R.R. No. 4, Atkinson, Nebr. 68713
Filed Nov. 19, 1976, Ser. No. 743,308
Int. Cl.² B05B *3/12*
U.S. Cl. 137—344 **11 Claims**

1. In a self-propelled sprinkling irrigation apparatus including a vertical-axis center-pivot and a central water supply pipe

at a non-rotatable central-pillar site of the land tract to be irrigated, a generally horizontal lengthy water distributing conduit extending radially outwardly from the center-pivot and water supply pipe and having a plurality of underlying traction supports spaced therealong, the outermost support being provided with drive means which whenever operating causes said outermost support to move arcuately overland at substantially constant-speed, and an electrical power-path flowing from a power-source through said central-pillar and thence through a nearby display-panel carrying a duty cycle primary-timer which is of the arbitrarily settable percentage-on type whereby the outermost support is driven intermittently at an overland average-speed determined by the arbitrarily set percentage-on proportion of constant-speed, the improvement

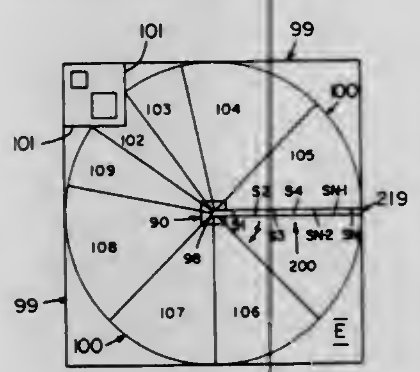

of a tract-tailored control means for establishing at least two different average-speeds for the irrigation apparatus according to sector-to-sector water requirement peculiarities of the particular land tract to be irrigated by a solitary irrigation apparatus, said control means comprising:

A. A secondary-timer of the said arbitrarily settable percentage-on duty cycle type and located on the display-panel, said primary-timer and secondary-timer being arranged in parallel branches along the power-path circuitry; and
B. Tract-tailored automatic switching means for causing electrical power to flow alternatively and exclusively through the respective duty cycle timers according to sectorial peculiarities of the land tract to be irrigated with said solitary center-pivot apparatus.

4,063,570
BACKFLOW CHECK VALVE

H. Charles Mitchell, 7525 Oakhill Ave., Wauwatosa, Wis. 53213, and Donald G. Fettes, 66 Rawlinson Place, Regina, Saskachewan, Canada

Filed Aug. 19, 1976, Ser. No. 715,773

Int. Cl.² F16K *15/03*

U.S. Cl. 137—454.2 10 Claims

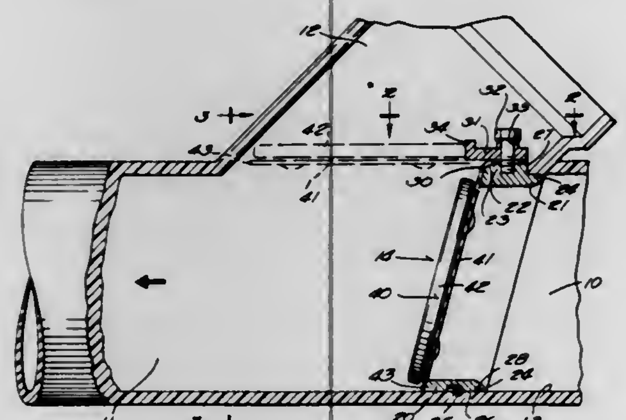

1. A backflow valve comprising a valve seat, a valve flap, and a flexible hinge, and adapted to be installed and maintained in an unmodified conventional cleanout wye through the side channel thereof without removing said wye from service, wherein the valve seat has an exterior tubular wall with upstream and downstream portions sized for insertion through the cleanout channel, said upstream portion has a diameter slightly less than that of the inside tubular edge of the upstream edge of said wye, and said upstream portion has attachment and sealing means to secure said valve seat to said inside tubular face of the upstream channel of the cleanout wye by inserting the valve seat through the cleanout channel of said wye and forcing the valve seat upstream a short distance, thus engaging said sealing means between the upstream edge of the exterior tubular face of the valve seat and the inside tubular face of the upstream channel of the cleanout wye, said attachment means consisting of at least one tooth which protrudes from the upstream portion of only the exterior tubular wall of the valve seat and which lodges against the interior tubular face of the upstream channel of the cleanout wye when the valve seat is installed therein to prevent movement of the valve seat with respect to the cleanout wye after said valve seat is installed, said sealing means consisting of an O-ring which seats between the upstream portion of the exterior tubular wall of the valve seat and the inside tubular wall of the upstream channel of said cleanout wye, whereby said valve may be installed without adhesives or other external securing means, said hinge being backed by a shoulder curved on a large radius.

4,063,571
FLOW REGULATOR AND SYSTEM

Stephan C. Ban, 9009 Mears St., Fairfax, Va. 22030

Filed Feb. 3, 1977, Ser. No. 765,326

Int. Cl.² F16K *11/22*

U.S. Cl. 137—599.1 4 Claims

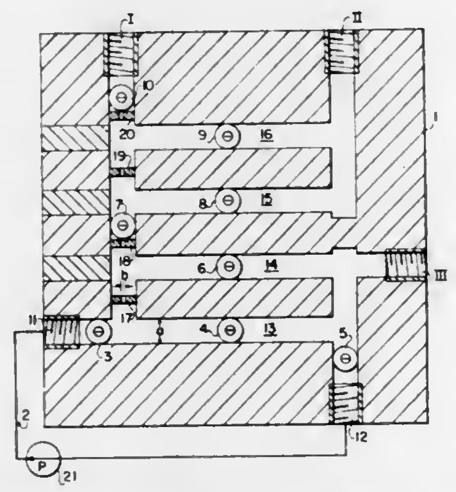

1. A flow regulator comprised of a body member, said body member having:

a. a fluid intake port having a flow regulating valve;
b. a fluid exhaust port having a flow regulating valve;
c. a first set of parallel passages interconnected to each other at both ends and in communication with said intake and exhaust ports;
d. a second set of parallel passages interconnected to each other at both ends, said first set of passages being interconnected with said second set of passages solely at the end of said sets closest to said intake port;
e. orifice means located in each of the interconnections between said passages of said sets of passages at the end of the passages closest to said intake port, and in the interconnection between said sets of passages;
f. a first auxilliary port communicating directly with the end of the passages of said second set of parallel passages located closest to said intake port, and having means to restrict the flow therethrough;
g. a second auxilliary port in direct communication with the other end of the passages of said second set;
h. a third auxilliary port in direct communication with the end of the passages of said first set located closest to said exhaust port; and
i. valve means in each of said passages of said first and second sets of parallel passages.

4,063,572
SWITCHING CONNECTOR FOR PIPES, PARTICULARLY FOR PNEUMATIC CONVEYING

Hans Rudolf Anderegg, Niederuzwil, and Karl Müller, Uzwil, both of Switzerland, assignors to Gebrueder Buehler AG, Uzwil, Switzerland

Filed Oct. 21, 1976, Ser. No. 734,640

Claims priority, application Switzerland, Oct. 22, 1975, 13661/75

Int. Cl.² F17D *1/08*

U.S. Cl. 137—862 22 Claims

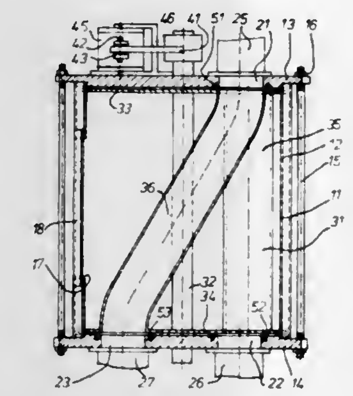

1. A switching connector for pipes and the like, comprising support means having first communicating means including a plurality of branch ports each adapted to communicate with a branch pipe; carrier means having at least one elongated passage adapted to communicate with a main pipe at one end thereof and having second communicating means including a connecting port at the other end thereof, and mounted on said support means for relative turning about an axis between a plurality of positions in which said connecting port registers and is out of registry with one of said branch ports, respectively; a contact member connected to one of said carrier and support means and having a contact surface surrounding the respective communicating means of said one means; and sealing means mounted on the other of said carrier and sealing means about the respective communicating means of said other means and in sealing contact with said contact surface about the registering ports, said one means having an access opening which aligns with a non-registering port of said other means in one of said positions to afford access to said sealing means mounted about such non-registering port for maintenance and replacement of such sealing means.

4,063,573
THERMAL INSULATION ASSEMBLY

Louis L. Harting, Crown Point, Ind., and Michael R. Kozlow, Ransomville, N.Y., assignors to The Carborundum Company, Niagara Falls, N.Y.

Filed Apr. 21, 1976, Ser. No. 678,793

Int. Cl.² F16L *9/22*

U.S. Cl. 138—155 7 Claims

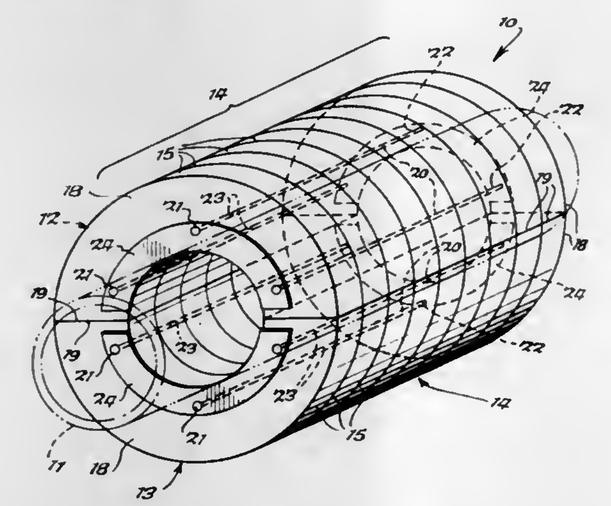

1. A thermal insulation unit for securely covering an elongated body which unit comprises first and second assemblies, each of said assemblies comprising a series of abutting similar U shaped insulation elements made of a resilient heat resistant material, each of said elements having an interior surface, an exterior surface, two side surfaces and two end surfaces, the elements in said series being in an aligned arrangement with a side surface of each element securely contacting a side surface of each abutting element and each of said elements having a radial orientation similar to that of each abutting element, said arrangement being held by a plurality of elongated rods having first and second ends, said rods passing through axially oriented holes in said elements, each of said assemblies further comprising a first and second plate, said rods being joined and secured at their first ends by said first plate, said first plate being smaller than and abutting the side surface nearest said first plate and being arranged so that all portions of said first plate are distally removed from all exterior surfaces, said rods being similarly joined at their second ends by said second plate which is smaller than and abuts the side surface nearest said second plate, all portions of said second plate being distally removed from all exterior surfaces, said first and second assemblies abutting at the end surfaces of the elements of said assemblies to completely encircle said elongated body.

4,063,574
LOOM

Joyce Ann Miller, 2627 Haverford Road, Columbus, Ohio 43220

Filed Aug. 12, 1976, Ser. No. 713,876

Int. Cl.² D03D *29/00*

U.S. Cl. 139—29 4 Claims

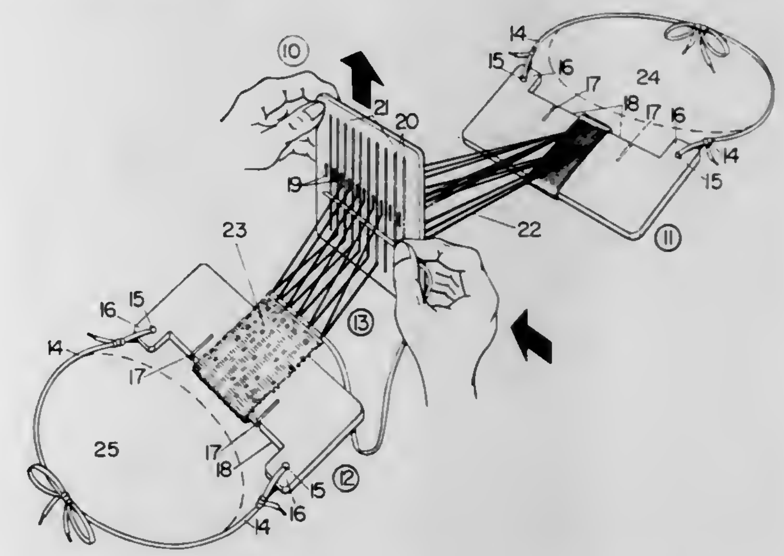

1. An improved loom of the type having a pair of end members for securing and applying tension to opposite ends of warp threads and having an intermediate heddle, wherein the improvement comprises a pair of end members each end member formed with a series of spaced slots extending into an edge thereof and a tensioning cord means attached at its opposite ends to said end member more outward toward said edge than the bottoms of said slots for, under tension, orienting said slots in a direction opening away from the opposite end member.

4,063,575
PHOTO-ELECTRICALLY OPERATED WEFT FEELER

Luciano Santi, Florence, Italy, assignor to Officine Galileo Meccanotessile S.p.a., Florence, Italy

Filed Aug. 5, 1976, Ser. No. 712,062

Claims priority, application Italy, Aug. 7, 1975, 9511/75

Int. Cl.² D03D *51/34*

U.S. Cl. 139—370.2 6 Claims

1. A weft feeler device for a loom comprising a movable assembly synchronously oscillatable with the loom and including a feeler subjected to the retaining effect of a weft, a photo-electric system comprising an optical beam generator and a photo-electric sensor, a slidable unit mounting said feeler on

said assembly for sliding movement relative to said photo-electric system, and an intercepting screen mounted on said slidable unit for movement with the feeler to block passage of the beam when the feeler is not retained by the weft whereby a signal can then be generated, said assembly further comprising

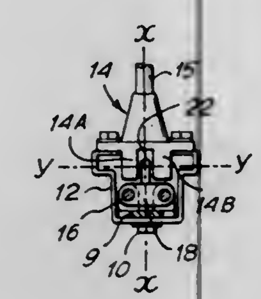

a body with two spaced extensions, one carrying the optical beam generator and the other the photo-electric sensor; said screen being a longitudinally oriented finned screen positioned to be inserted in the space between the two extensions to block the optical beam.

4,063,576
HEAT TREATMENT OF NiO_x UTILIZED IN PRESSED NICKEL ELECTRODES
Ronald G. Gunther, Mystic, Conn., assignor to Yardney Electric Corporation, Pawcatuck, Conn.
Filed Aug. 26, 1976, Ser. No. 717,859
Int. Cl.[2] B65B *1/04*
U.S. Cl. 141—1.1 **12 Claims**

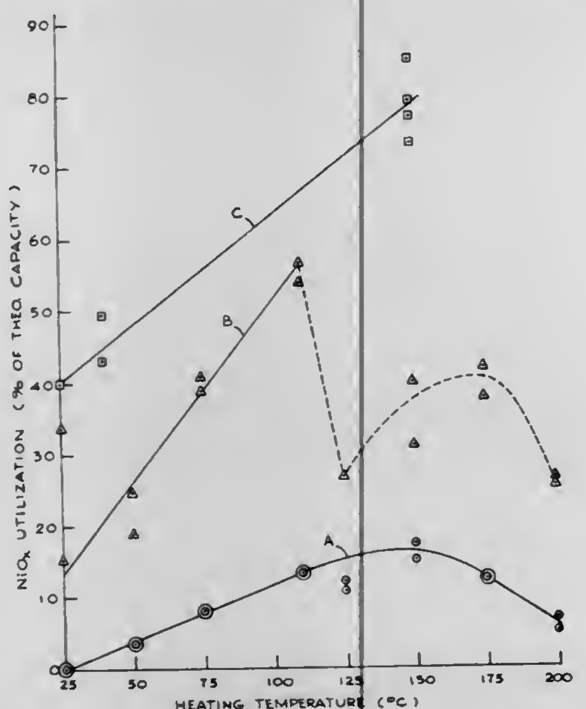

1. The method of making an improved pressed nickel electrode, said method comprising forming a dry admixture of the berthollide NiO_x as the active electrode material, and a binder therefor, and pressing said admixture into a current collector, said method including the step of: heating said NiO_x at a temperature between about 125° C. and about 175° C. for at least about 15 minutes.

4,063,577
WOOD LATHE TOOL HOLDER
Larrie A. Tennant, 1621 PH 10, Castle Rock, Wash. 98611
Filed June 11, 1976, Ser. No. 695,002
Int. Cl.[2] B27C *7/06*; B23B *3/02*
U.S. Cl. 142—49 **2 Claims**

1. A tool holder for use on a wood lathe fitted with a bed rail and a support block slidably mounted thereon, the tool holder comprising:

a. an arm,
b. mounting means mounting the arm horizontally on the support block for longitudinal and rotational adjustment about a vertical axis, with the arm extending outwardly therefrom,
c. a sleeve fixed to one end of the arm transversely thereof,
d. a post slidably received vertically in the sleeve and thereby mounted movably both longitudinally and rotationally,
e. clamp means on the sleeve for clamping the post therein in a selected position of longitudinal and rotational adjustment,

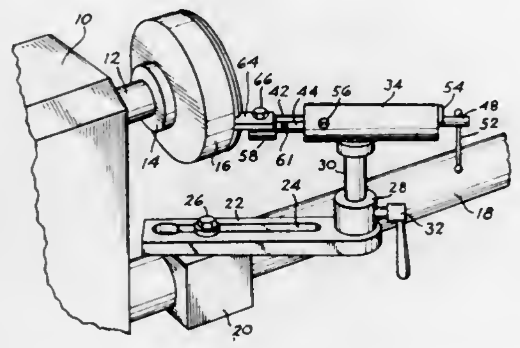

f. longitudinally extensible ram means fixed transversely to the outer end of the post and disposed in a horizontal plane parallel to the arm, and
g. knife mounting means mounted on the outer end of the ram means, and comprising:
 1. a knife block arranged to support a knife, and
 2. pin and socket means on the knife block and outer end of the ram for supporting the knife block for rotational adjustment relative to the ram.

4,063,578
SAFETY DEVICE FOR USE WITH A WOOD SHEARING MACHINE
Angelo Cremona, V. le Lombardia, 275, Monza, Italy (20052)
Filed May 17, 1976, Ser. No. 686,840
Claims priority, application Italy, July 14, 1975, 25371/75
Int. Cl.[2] B27F *5/00*
U.S. Cl. 144—178 **3 Claims**

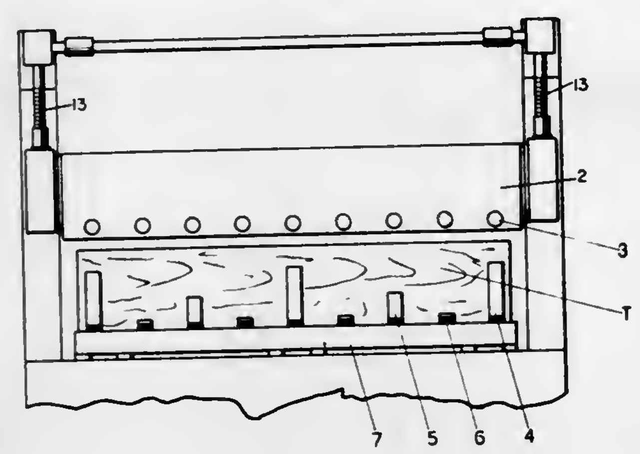

1. In a vertical type wood shearing machine including a substantially horizontal base, a guide mounted on the base at a fixed position thereon, a wood support table reciprocable vertically in the guide, drive means operable to reciprocate the support table, means on the support table operable to grip and hold a wood stock thereon, a blade holding unit and a bar carrying unit mounted on the base for conjoint displacement therealong toward the support table, and means for so conjointly displacing the two units, an improved safety device comprising a plurality of magnetic proximity switches mounted on one of said blade holding and bar-carrying units at equal spacings along a row extending transversely of said shearing machine; said gripping means comprising a plurality of ferrous metal hooks on said support table arranged at equal spacings in a row extending transversely of said shearing machine, each hook being aligned with a respective magnetic proximity switch; each magnetic proximity switch, when actuated due to proximity to its associated hook, interrupting operation of said shearing machine.

4,063,579
ADJUSTABLE GUIDE FOR FEEDING BENCHES FOR EDGING MILLS
Esbjörn Åke Stake, Hudiksvall, Sweden, assignor to Aktiebolaget Iggesunds Bruk, Sweden
Filed Aug. 24, 1976, Ser. No. 717,059
Claims priority, application Sweden, Aug. 25, 1975, 7509438
Int. Cl.[2] B27C *1/12*
U.S. Cl. 144—246 R **9 Claims**

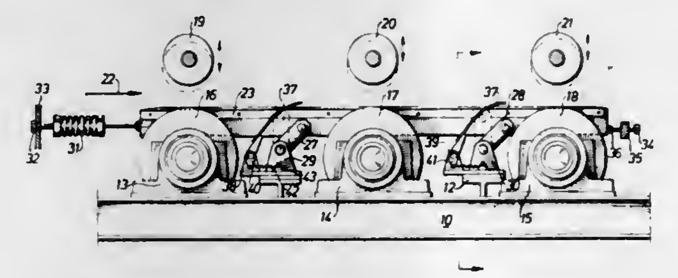

1. Apparatus for guiding a workpiece along an edging mill feeding bench having a frame with a plurality of spaced feeding rollers extending across the same and cooperating pressure applying means associated with the feeding rollers comprising guide bar means extending transversely of the feeding rollers and generally centrally of the frame, said guide bar means including at least one elongated guide member for engagement with the workpiece, means for movably mounting said guide bar means on the frame, said guide bar means being movable to a lowered position substantially even with the outer periphery of the feeding rollers by the pressure applying means when the pressure applying means is operated, and means for raising said guide bar means relative to the feeding rollers so that a portion of said guide member normally is located above the feeding rollers, whereby said portion of said guide member forms an elongated impression in the workpiece when the pressure applying means forces the workpiece against the feeding rollers and guides the workpiece while the feeding rollers move the workpiece along the bench.

4,063,580
MECHANISM FOR HOLDING FASTENERS
Robert F. Bischoff, Jr., 30 Fairmount Ave., Morristown, N.J. 07960
Filed Feb. 10, 1976, Ser. No. 656,856
Int. Cl.[2] B25B *15/00*
U.S. Cl. 145—51 **2 Claims**

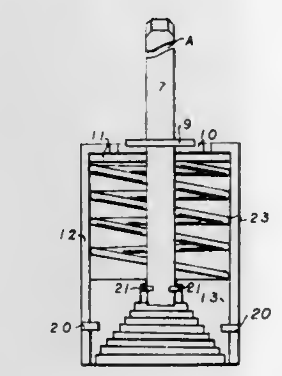

1. A simplified mechanism for driving a fastener into applicable material, said mechanism comprising a removable shaft having a fastener driving end with removable transverse abutment pin means adjacent the driver end and a removable transverse plate pin spaced from said pin means away from said driver end; a housing means coaxially positioned on said shaft and surrounding said driver end, said housing means having an open bottom, a top wall with an opening smaller than said open bottom through which said shaft extends, and a surrounding wall between said top and open bottom; a removable, solid, one-piece guide member in said housing adjacent the open bottom held therein by removable guide pins in said surrounding wall, said guide member being coaxial with said shaft and having an internally stepped arrangement for accommodating the heads of differently sized fasteners, the stepped arrangement being defined by a plurality of spaced, circumferential, parallel steps of decreasing diameter in the direction away from said open bottom, and the circumferential step farthest from the open bottom being above and having a diameter smaller than the length of said transverse abutment pin means for abutting therewith; a coaxial return spring in said housing surrounding said shaft above said guide member abutting thereagainst at one end; two coaxial plates surrounding said shaft above said spring, the two plates in rotational friction contact with each other, the lower plate abutting the spring on one side and providing stop means on the other side with the housing means top wall, and the upper plate abutting the transverse plate pin, whereby when the head of a fastener is positioned on one of the circumventional steps, the driver end may be urged against the action of the spring into engagement with the head for driving same, after which the return spring will return the housing means to a rest position with the transverse abutment pin means abutting the farthest circumferential step.

4,063,581
CARRIER FOR TENNIS EQUIPMENT
Stanley Boyin Williams, 2088 E. Empire, Lot 151, Benton Harbor, Mich. 49022
Filed July 29, 1976, Ser. No. 709,776
Int. Cl.[2] B65D *85/00*
U.S. Cl. 150—52 G **5 Claims**

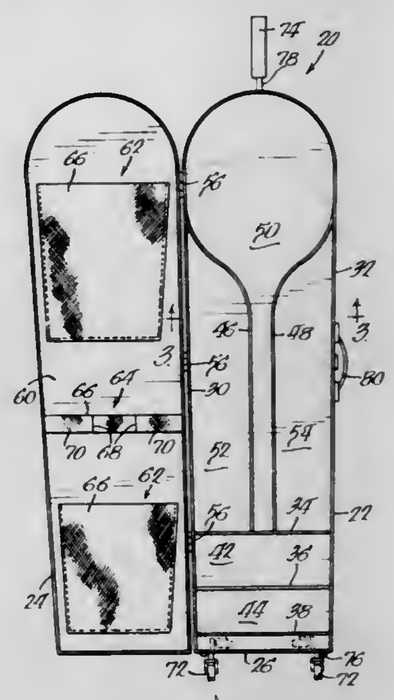

1. In a carrier for tennis equipment, a case having a rear wall, a base wall and a pair of side walls, said side and base walls being joined with said rear wall and extending therefrom to form an opening to said case, said side walls extending from said base wall and curving toward each other to form a semicircular top portion of said case opposite from said base wall; inner walls in said case configured to form a racquet shaped recess of sufficient size to receive a racquet therewithin, said inner walls being first and second walls extending in spaced parallel relationship from lower ends thereof toward said top wall portion to form a section of said recess for receiving a handle of a racquet, said first and second walls curving outward from each other at upper ends thereof toward said side walls to form with said top portion a section of said recess for receiving a head of a racquet; a third wall contiguous with the lower ends of said first and second walls and extending between said side walls and spaced from the base wall to form

with said first, second, and side walls first and second storage compartments; and a door pivotally connected with said case for movement between a position away from said opening to said case and a position closing said opening to said case.

4,063,582
ARRANGEMENT FOR AND A METHOD OF ANCHORING A MOUNTING ELEMENT IN A HOLE OF MASONRY AND THE LIKE
Artur Fischer, Weinhalde 34, D-7244 Tumlingen, Waldachtal 3, Germany
Filed Jan. 24, 1977, Ser. No. 762,035
Claims priority, application Germany, Jan. 23, 1976, 2602433
Int. Cl.[2] F16B *39/00*
U.S. Cl. 151—41.7 **20 Claims**

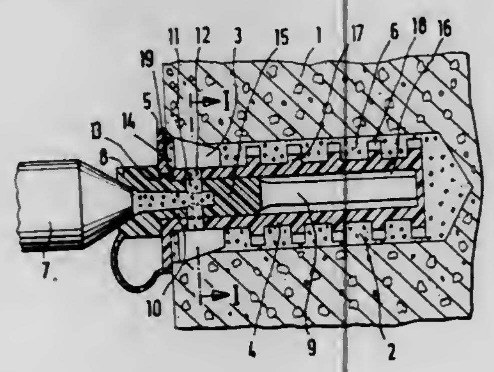

1. In an arrangement for anchoring a mounting element in a hole of a masonry or other structure by the use of a binding material, a combination comprising a sleeve-shaped mounting element having a cross-sectional dimension less than the cross-section of said hole so as to form a circumferential recess between an outer surface of said mounting element and said hole, said mounting element having a central bore adapted to receive therein a threaded element and being provided with at least one substantially transverse bore communicating said central bore with said circumferential recess; means on said mounting element for holding the same in a predetermined position relative to said hole; means for closing said hole so as to prevent backflow of binding material out of said hole; and an adapter element tightly inserted in said central bore of said mounting element and having a bind hole communicated with a source of said binding material, and said blind hole including a transverse hole portion communicating with said transverse bore of said mounting element so as to establish a path for passage therethrough of binding material from said source into said circumferential recess to thereby anchor said mounting element in said hole.

4,063,583
TIRE CHAIN
Dr. Hansjorg Rieger, Saarstrasse 48, 7080 Aalen; Leo Kess, Schillerstrasse 20, 7080 Aalen-Unterkochen, and Dietmar Holzwarth, Vogelhofstr. 51, 7070 Schwab. Gmund, all of Germany
Filed July 6, 1976, Ser. No. 702,920
Claims priority, application Germany, July 25, 1975, 2533838
Int. Cl.[2] B60C *27/06*
U.S. Cl. 152—241 **14 Claims**

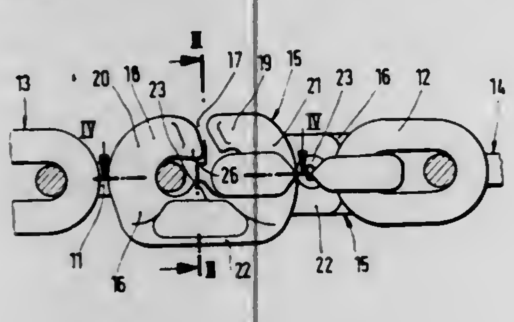

1. Tire chain, especially anti-skid chain, with at least one separable chain strand, the end links of which, adjoining each other at the separation point, are connectable by use of a connecting element having a body with an insertion slot, characterized therein that each separation point is provided with two connecting elements (15,28, 29,30) which can be hooked into each other, each safely connected with an end link (11,12), that at least one of the portions (18,19) of the body (16) bounding the respective insertion slot (17) has a cross-section decreased at its free end at the expense of the width (b) of said portion and that the width (w) of the insertion slot is smaller than the height (h) of each of those portions of the body which bound the insertion slot.

4,063,584
FLAP FOR RADIAL TIRES
Hiroyoshi Takigawa, Higashi-Murayama, Japan, assignor to Bridgestone Tire Company Limited, Tokyo, Japan
Filed Feb. 27, 1976, Ser. No. 661,871
Claims priority, application Japan, Mar. 8, 1975, 50-28373
Int. Cl.[2] B60B *25/22;* **B60C** *5/16*
U.S. Cl. 152—365 **3 Claims**

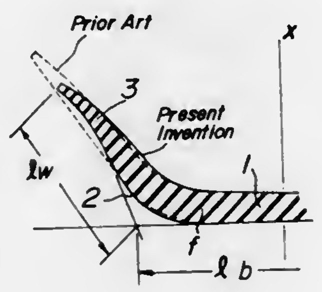

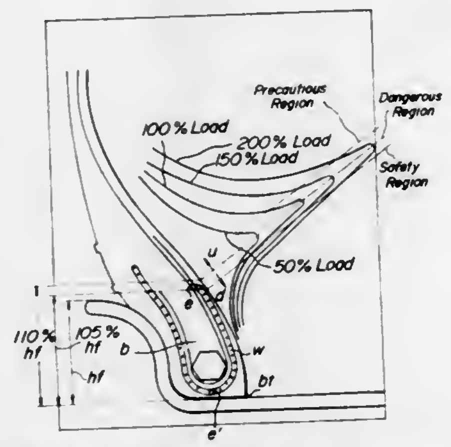

1. A flap for radial tires comprising, a cylindrical base portion along the outer periphery of a standard wheel rim and between a pair of bead portions of a tire to be mounted on said wheel rim with a tube inside the tire, and a pair of annular wing portions, said cylindrical base portion having a width from 45% to 50% of said wheel rim and adapted to be expanded with expansions of said tube by inflation pressure, each wing portion having a bent portion contacting a toe of each of said bead portions and integral with each side of said cylindrical base portion and extending from said bent portion for insertion between the inner surface of said bead portions of the tire and the tube inside the tire, a ratio of a height *hw* of the peripheral edge of said wing portion measured from the outer periphery of said wheel rim to a height *hf* of the flange of said wheel rim being in the range of 85% to 105%, a ratio of a peripheral length *lw* of said annular wing portion of the flap per se from its bottom to its peripheral edge to said height *hf* of the flange of said wheel rim being in the range of 94% to 128%.

4,063,585
DISPLAY ASSEMBLY AND COMPONENT PARTS THEREFORE
Timothy Prescott Stanley, 70 Glen Forest Road, Bramalea, Ontario, Canada (L6S 1M2)
Filed Feb. 14, 1977, Ser. No. 768,599
Int. Cl.[2] A47G *5/00*
U.S. Cl. 160—135 **5 Claims**

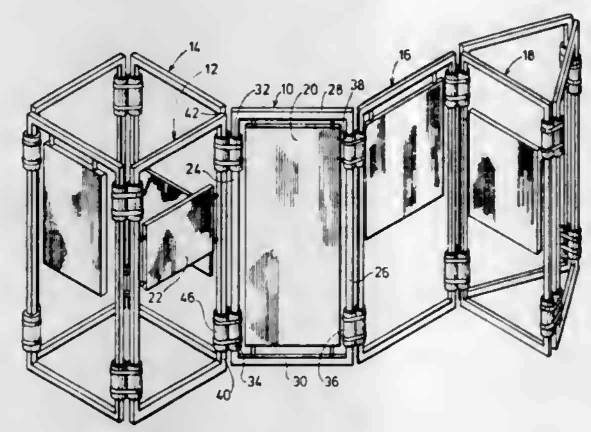

1. Movable partitioning and display system comprising a plurality of relatively movable partition members assemblable with and dismantlable from one another;

each partition member comprising at least one side frame member in the form of a strut having a non-circular cross sectional shape, said strut having at least two first length portions comprising cylindrical collars on the exterior of said strut at spaced apart locations along the length thereof, and residual second length portions of smaller cross section, the outer surfaces of said second length portions being disposed wholly within the axial length-wise projection of the cylindrical outer surface of said first length portion;

said partition members being positionable with respect to one another with respective first length portions on side frame members thereof juxtaposed and with cylindrical outer surfaces thereof touching one another on assembly to form the system;

and releasable binding means adapted to surround and tightly bind together groups of two or more juxtaposed first length portions of respective partition members on assembly thereof to form said system.

4,063,586
MOLD FORMING APPARATUS WITH MOLD FLASK STABILIZING MEANS
Franz Keller, Neuhausen am Rheinfall, Switzerland, assignor to Erwin Buhrer, Schaffhausen, Switzerland
Filed Feb. 2, 1977, Ser. No. 764,954
Claims priority, application Switzerland, Feb. 2, 1976, 1273/76
Int. Cl.[2] B22C *15/08*
U.S. Cl. 164—207 **6 Claims**

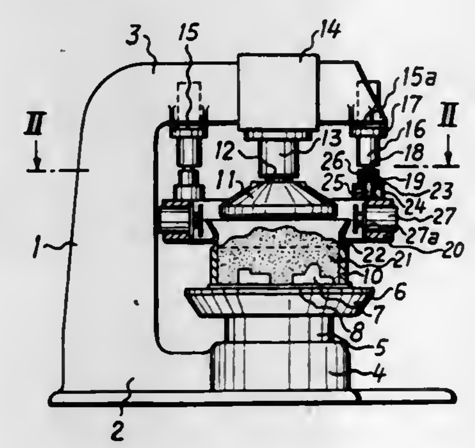

1. In mold forming apparatus including means for compressing molding sand contained in mold flasks, the improvement comprising stabilizing means for counteracting the effects of compression forces generated within said mold flasks during compression of said molding sand tending to cause distortion of said flasks, said stabilizing means comprising a movable frame adapted to extend about a molding flask placed in said apparatus for compression of molding sand contained therein, lifting gear for adjustably positioning said frame relative to a molding flask placed in said apparatus, a plurality of fluid pressure actuated tensioning elements mounted on said frame and movable therewith, said tensioning elements being adapted to apply compressive forces inwardly of said molding flask upon the walls of said flask, and pressure means for applying fluid pressure to said tensioning means to effect application thereby of said compressive forces against said molding flask in relation to the magnitude of the forces created within the flask by compression of the molding sand contained therein by said mold sand compressing means.

4,063,587
ROTOR CONSTRUCTION
Richard Franklin Stockman, Friendship, N.Y., assignor to The Air Preheater Company, Inc., Wellsville, N.Y.
Filed June 6, 1977, Ser. No. 803,714
Int. Cl.[2] F28D *19/00*
U.S. Cl. 165—8 **5 Claims**

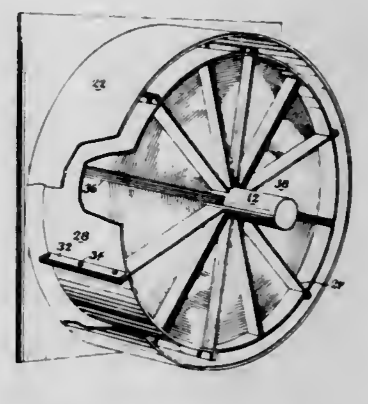

1. Rotary regenerative heat exchange apparatus having a rotor post, a plurality of imperforate diaphragms connected to the rotor post and extending radially from the rotor post to provide a framework for a rotor having a series of sectorial compartments therebetween, a rotor shell joining ends of the diaphragms to enclose the rotor, housing means surrounding the rotor having end plates at opposite ends thereof with imperforte sections between spaced openings that direct a heating fluid and a fluid to be heated axially through the compartments of the rotor, means for rotating the rotor about its axis to alternately align the rotor with the heating fluid and with the fluid to be heated, and imperforate heat absorbent plates carried by each compartment of the rotor midway between diaphragms being radially disposed to axially confront the imperforate portions of the end plates in a sealing relation to preclude the flow of fluid laterally between opposite sides of the lateral plates.

4,063,588
REVERSIBLE HEAT EXCHANGER OR REGENERATOR SYSTEMS
Robert Michael Thorogood, London, England, assignor to Air Products and Chemicals, Inc., Allentown, Pa.
Filed Jan. 27, 1976, Ser. No. 652,681
Claims priority, application United Kingdom, Jan. 28, 1975, 3738/75
Int. Cl.[2] F28F *17/00, 27/02;* **F28G** *9/00;* **F25J** *5/00*
U.S. Cl. 165—97 **5 Claims**

1. A reversible heat exchanger or regenerator system comprising a heat exchanger or regenerator having at least one flow path for the reversing heat exchange fluids, which flow path has at each end, an inlet branch and an outlet branch,

wherein each branch is provided with two valves arranged in series, a vent pipe in communication with the branch between

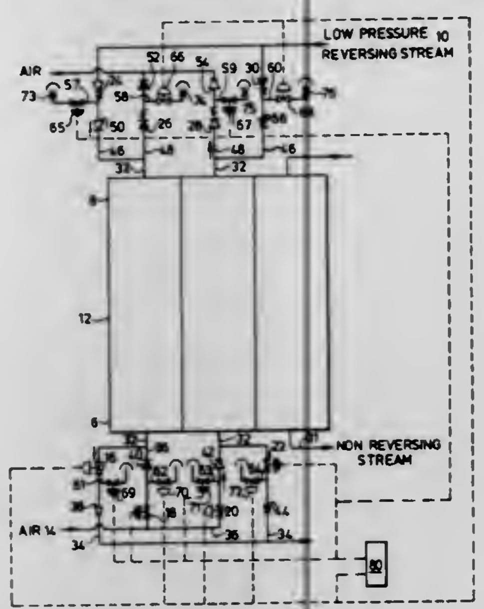

the two valves and means for controlling the flow of fluid through said vent pipe.

4,063,589
HEAT EXCHANGER ASSEMBLIES
Whalley Vowe Battcock, Newport Pagnell, England, assignor to Coal Industry (Patents) Limited, London, England
Division of Ser. No. 557,403, March 11, 1975, abandoned. This application Sept. 28, 1976, Ser. No. 727,618
Claims priority, application United Kingdom, Mar. 21, 1974, 12611/74
Int. Cl.² F28D *13/00*
U.S. Cl. 165—104 F **5 Claims**

1. A heat exchanger assembly including vessel having an outer wall and an inner wall and a group of heat exchanger tubes arranged within the vessel, the tubes each being of the same involute form and extending between the outer and inner walls, the tubes having outer and inner ends, the tubes being secured at their outer ends to the outer walls and at their inner ends to the inner wall, a gas permeable support plate for supporting a fluidized bed of particulate material and located between the outer and inner walls of the vessel.

4,063,590
PREHEATER FOR CLOTHES DRYER
Christopher L. McConnell, 3970 NW. 193rd St., Opa Locka, Fla. 33055
Filed Oct. 22, 1976, Ser. No. 734,814
Int. Cl.² F28F *3/12*
U.S. Cl. 165—135 **4 Claims**

2. In a preheater for attachment to the back of a clothes dryer which takes in ambient air at the back and discharges moist heated air at the back, said preheater comprising:

box means having a back wall for attachment to the back of the clothes dryer and a front wall spaced from its back wall;

heat conductive partition means in said box means extending substantially vertically when said box means is attached to the back of the clothes dryer, said partition means in horizontal cross-section extending in serpentine fashion between said back and said front wall of said box means to divide the interior of said box means into alternate substantially vertical ambient air intake passages next to said back wall and substantially vertical heated air discharge passages facing toward said front wall;

means providing air inlets at the upper end of said ambient air intake passages;

said box means defining a heated air inlet plenum which leads into the lower end of said heated air discharge passages and has an inlet in said back wall for receiving heated air discharged from the clothes dryer;

and said box means defining a heated air outlet plenum leading from the upper end of said heated air discharge passages;

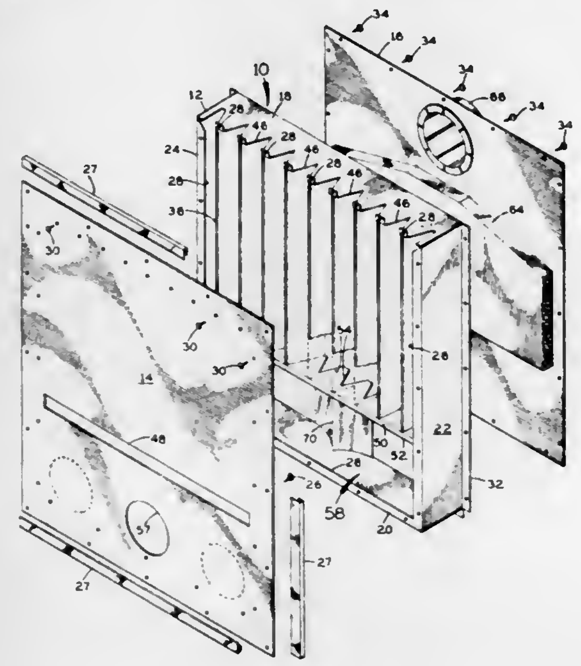

the improvement which comprises:

means defining an air outlet opening in said back wall at the lower end of said ambient air intake passages for passing ambient intake air from the latter into the clothes dryer;

and means for insulating said heated air discharge passages at said front wall of said box means said insulating means being engaged between said front wall and the adjacent segments of said heat conductive partition means to close said heated air discharge passages at the front between said plenums for blocking heat transfer from said heated air discharge passages to said front wall of said box means whereby to minimize the loss of heat from said heated air discharge passages through said front wall and thereby enhance the heat exchange from said heated air discharge passages through said heat conductive partition means to said ambient air intake passages for preheating the ambient air going into the clothes dryer.

4,063,591
PLATE HEAT EXCHANGERS
John Dennis Usher, Redhill, England, assignor to The A.P.V. Company Limited, Crawley, England
Filed Nov. 20, 1975, Ser. No. 633,630
Claims priority, application United Kingdom, Dec. 20, 1974, 55105/74
Int. Cl.² F28F *3/10*
U.S. Cl. 165—167 **4 Claims**

1. In a plate heat exchanger comprising a separable pack of gasketed plates defining flow spaces between the plates having port-forming apertures, grooves adjacent said apertures and sealing gaskets contained in said grooves, the flow space between adjacent plates being in communication with an aperture through a port entry gap maintained between the groove of one plate and the adjacent plate, the apertures in communication with the flow spaces being provided with castellated strips fixed in the port entry gaps to provide interplate support in the region of the gasket sealing the ports from the adjacent flow spaces, each of said castellated strips comprising spaced-apart first surface portions along a common plane, spaced-apart second surface portions spaced along a common plane parallel to the plane of said first portions said first and second portions being staggered along said strip, and said first and

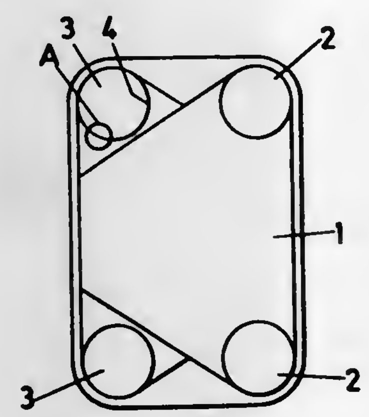

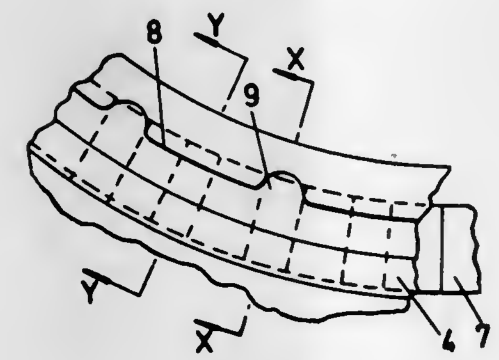

second portions being joined by linking surface portions disposed at right angles to the planes of the first and second portions, said grooves having spaced reinforcing recesses on at least one wall: the improvement that the castellated strip is located with respect to said groove such that each said reinforcing recess is supported by a castellation of the strip and the spacing of the reinforcing recesses is such that at least one castellation is located between each two recess-supporting castellations so that the pitch of said reinforcing recesses is an integral multiple of the pitch of said castellations.

4,063,592
SYSTEM FOR LOGGING HIGHLY DEVIATED EARTH BOREHOLES UTILIZING AUXILIARY SINKER BAR ASSEMBLY
Arthur H. Youmans, Houston, Tex., assignor to Dresser Industries, Inc., Dallas, Tex.
Filed Sept. 29, 1976, Ser. No. 727,919
Int. Cl.² E21B *47/00*
U.S. Cl. 166—67 **4 Claims**

1. A system for logging earth boreholes, comprising:

an elongated well logging instrument adapted to traverse an earth borehole;

a cable leading from the earth's surface attached to said instrument;

hoist means at the earth's surface for winding and unwinding said cable to thereby enable said instrument to traverse said earth borehole;

means slidably attached to said cable and adapted to traverse said earth borehole; and

first and second stop means on said cable intermediate the said hoist means and the said logging instrument and on

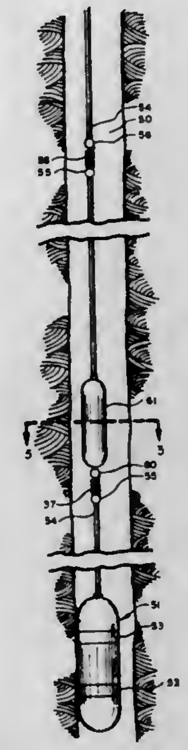

opposite sides of said slidable means, thereby limiting the sliding movement of said slidable means.

4,063,593
FULL-OPENING ANNULUS PRESSURE OPERATED SAMPLER VALVE WITH REVERSE CIRCULATION VALVE
Robert L. Jessup, Marlow, Okla., assignor to Halliburton Company, Duncan, Okla.
Filed Feb. 16, 1977, Ser. No. 769,123
Int. Cl.² E21B *43/12, 47/00*
U.S. Cl. 166—317 **17 Claims**

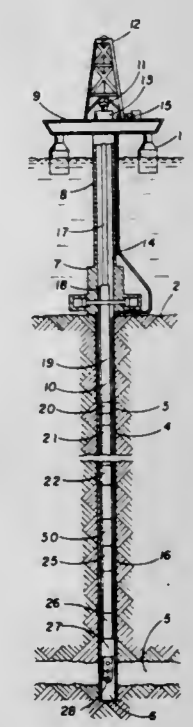

1. An apparatus for use in testing an oil well having a testing string in a borehole providing an open flow path therethrough extending from the surface of the earth to a formation to be tested, comprising:

a cylindrical housing adapted to be incorporated in said testing string having an open bore therethrough forming a part of said open flow path, and a power port through the wall thereof;

a power mandrel in said open bore having an annular piston for moving said power mandrel in a first axial direction responsive to fluid pressure exterior of said cylindrical

housing communicated to said annular piston through said power port;
frangible restraining means between said power mandrel and said cylindrical housing for holding said power mandrel in a first position until the pressure exterior of said housing exceeds a predetermined value, and for frangibly releasing said power mandrel when said pressure exterior of said housing exceeds said predetermined value allowing said power mandrel to move in said first direction toward a second position;
operating mandrel means in said open bore releasably connected to said power mandrel, and co-engaged with said cylindrical housing for forming an oil chamber between said housing and a portion of said operating mandrel means;
disconnecting means between said power mandrel and said operating mandrel means for disconnecting said operating mandrel from said power mandrel when said power mandrel reaches said second position;
dividing means between said operating mandrel means and said housing for dividing said oil chamber and including a flow passage therethrough for passing oil in said oil chamber from one side of said dividing means to the other side of said dividing means as said operating mandrel means moves in concert with said power mandrel while said power mandrel moves from said first position to said second position;
metering means in said flow passage for hydraulically controlling the rate at which oil in said oil chamber moves from one side of said dividing means to the other side of said dividing means; and
sampler valve means including two ball valve means in said open bore and operatively connected to said operating mandrel means for simultaneously moving from an open position providing a fully open flow path to a closed position responsive to movement of said operating mandrel means as said power mandrel moves from said first position to said second position, and for entrapping a sample of fluid in the open bore between said ball valves upon the closing of said ball valves.

4,063,594
PRESSURE-BALANCED WELL SERVICE VALVE
Robert Houston Canterbury, Hobbs, N. Mex., assignor to Dresser Industries, Inc., Dallas, Tex.
Continuation of Ser. No. 555,778, March 6, 1975. This application June 11, 1976, Ser. No. 695,278
The portion of the term of this patent subsequent to Oct. 26, 1996, has been disclaimed.
Int. Cl.² E21B *43/00*
U.S. Cl. 166—325 **3 Claims**

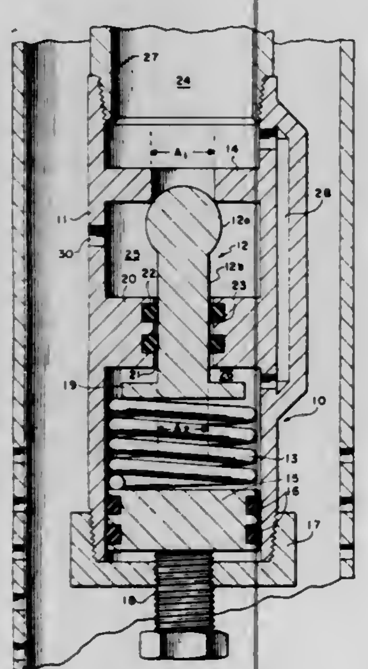

1. An underground wellbore treating valve assembly for the injection of predetermined quantities of fluids into low pressure downhole formations, said valve assembly comprising:
an elongated tubular housing having a central bore passage therethrough and adapted for sealing engagement in a conduit string;
an annular valve seat formed in the wall of said housing in said bore passage;
an inner annular shoulder formed in said housing below said valve seat;
seal means in said annular shoulder;
a sliding valve member closely fitting in said annular shoulder and having a valve-seat-closing upper portion arranged for sealing engagement with said valve seat;
upward biasing means located below said valve member and in abutment therewith;
bottom abutment means below said biasing means, in abutment therewith, and arranged to retain said biasing means in said housing;
a first pressure response area on top of said valve member and exposed to said valve seat;
a second pressure response area on said valve member below said annular shoulder and of less cross-sectional area than said first pressure response area;
port means through the wall of said housing between said valve seat and said annular shoulder; and,
a pressure bypass passage communicating from above said valve seat to below said annular shoulder.

4,063,595
AIR CONDITIONING SYSTEM HAVING SAFETY FEATURES FOR DETERMINING AND FOR ELIMINATING DANGEROUS CONDITIONS IN THE FORM OF FIRE, SMOKE, OR UNUSUALLY HIGH TEMPERATURES
Leonard R. Phillips, 6001 Bayou Grande Blvd., St. Petersburg, Fla. 33703
Continuation-in-part of Ser. No. 637,373, Dec. 2, 1975, abandoned. This application Mar. 9, 1977, Ser. No. 775,956
Int. Cl.² A62C *35/24, 37/02;* **F24F** *5/00*
U.S. Cl. 169—60 **11 Claims**

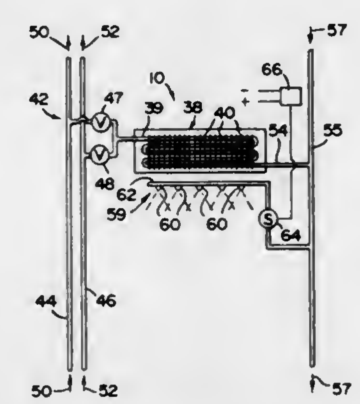

1. An air conditioning system of the type primarily designed to treat air from an external source, said system comprising: a housing, air conditioning means mounted in said housing and disposed in heat conducting relation to incoming air from the external source, a fluid circulating assembly connected in fluid communication with said air conditioning means, air intake and air return means disposed on said housing, said air intake means being disposed in fluid communication with said air conditioning means, control means interconnected to said air intake means, said control means including a first sensing element connected in movement regulating relation to said air intake means, whereby inflow air from the external source is regulated by said control means; and spray means mounted on said housing and disposed to direct fluid to the exterior of said housing and connected in fluid communication with said fluid circulating assembly, whereby fluid from said fluid circulating assembly is directed from said housing by said spray means.

4,063,596
SOIL CULTIVATING MACHINES
Cornelis van der Lely, 7, Bruschenrain, Zug, Switzerland
Filed Oct. 31, 1975, Ser. No. 627,746
Claims priority, application Netherlands, Oct. 31, 1974, 7414213
Int. Cl.² A01B *9/00, 33/06*
U.S. Cl. 172—65 **17 Claims**

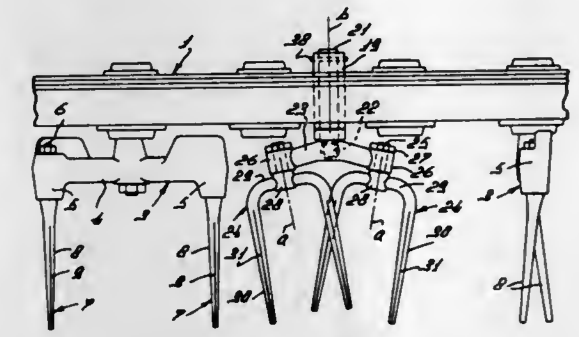

1. A soil cultivating machine comprising a frame and a plurality of driven soil working members with tine means mounted for rotation on corresponding upwardly extending shafts, driving means engaging said shafts to rotate said members about axes defined by said shafts, said shafts being positioned in a row that extends transverse to the direction of travel of the machine, a plurality of further soil working members being pivotably mounted on said machine and freely rotatable about respective axes in general alignment with said row, said further members each comprising at least one tine, the tines of adjacent further members being positioned to work overlapping strips of soil during rotational operation.

4,063,597
ROW MARKER WITH MARKER ARM FOLDED BY SERVO MOTOR
Leon E. Day, Memphis, Tenn., assignor to Ward A. Warren, Memphis, Tenn.
Filed Oct. 29, 1976, Ser. No. 736,751
Int. Cl.² A01B *17/00, 35/32*
U.S. Cl. 172—126 **3 Claims**

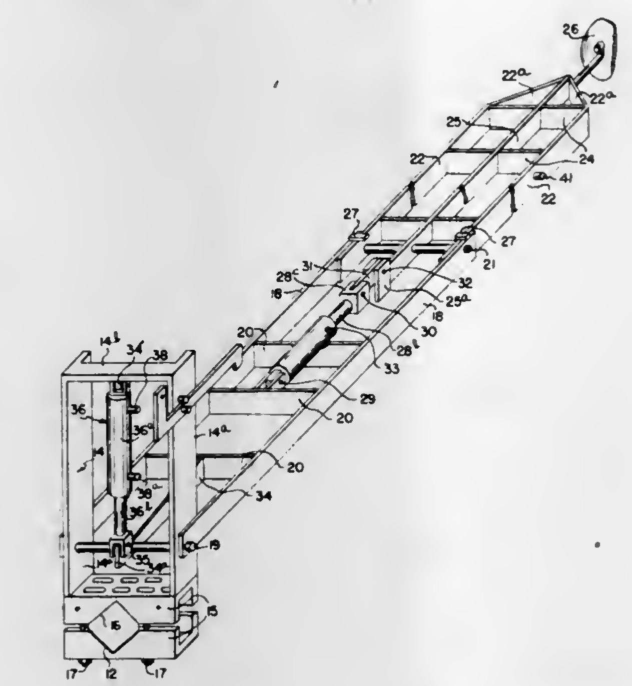

1. A row marker apparatus adapted to be used with a tractor having a hydraulic system and having a tool bar carried by the tractor for movement over the ground, said row marker apparatus comprising a frame for mounting on one end of said tool bar, a marking arm including a first arm portion having its inner end pivotally attached on a horizontal pivot on said frame for oscillation between a substantially horizontal working position and a substantially vertical carrying position, said marking arm including a second arm portion having one end pivotally attached to the outer end of said first arm portion at a pivot shaft for oscillating movement between a generally vertical carrying position close to said first arm portion in carrying position and a generally horizontal working position in alignment with said first arm portion in its working position, a marking element attached to the outer of said second arm portion, power control means for moving said marking arm between its carrying and working positions, said means including a first servo motor operatively connected between said frame and said inner end of said first arm portion for moving the latter between its carrying and its working position, a second servo motor having a cylinder and a piston reciprocatable therein and a piston rod, means on said tractor for operating said first and second servo motors by said hydraulic system, said second servo motor having pivotal attachment points respectively at one end of said cylinder and at the outer end of said piston rod, a lift arm parallel with and rigid with said second arm portion and extending inwardly beyond said pivot shaft, an L-shape connecting saddle piece rigid with said lift arm at its inner end and having a portion extending at a right angle upwardly therefrom in said working position, and a break-over plate having one end pivotally connected at a first pivot to one of said attachment points and having its other end pivotally connected at a second pivot point at the outer end of said right angle portion of said L-shape connecting saddle piece, the other attachment point being pivotally connected at a third pivot point to said first arm portion in such a position that in said working position said three pivot points are substantially in line so that said first servo motor when operated in working direction holds said first arm portion generally horizontal, and said second servo motor when operated in working direction moves said lift arm from one side of said pivot shaft to the other and holds said second arm portion locked in line with said first arm portion in said working position.

4,063,598
SOIL CULTIVATOR
Luigi Boldrin, 3 Via Puccini, Mestre, Italy
Filed Sept. 9, 1976, Ser. No. 721,717
Claims priority, application Italy, Sept. 9, 1975, 12782/75
Int. Cl.² A01B *19/02*
U.S. Cl. 172—705 **5 Claims**

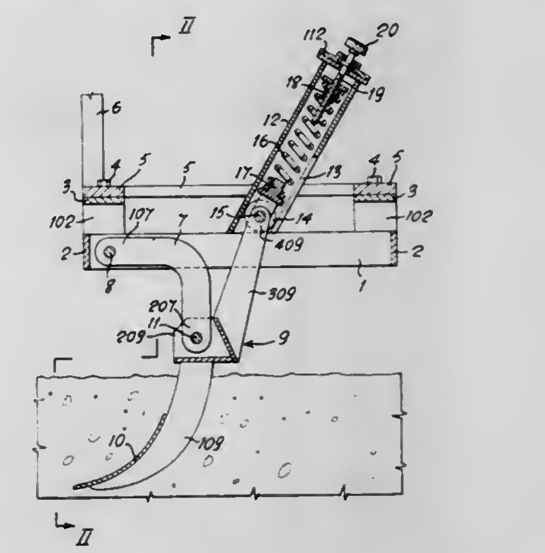

1. A soil cultivator comprising a supporting frame; means for attachment of said frame to a tractor; a first lever arm pivoted at one end to said frame, a second lever arm pivoted at an intermediate position to the other end of said first lever arm, said second lever arm being provided with a first arm portion extending downwardly below said intermediate pivot point and having secured thereto a shovel or the like soil working tool, and with a second arm portion integral with said first arm portion and extending upwardly above said intermediate pivot point, a fixed guide element secured to said support frame, the free end of said second arm portion being in sliding engagement with and being urged downwardly along said guide element by spring means while being caused to slide upwardly along said guide means in opposition to the force of said spring

by effect of the resistance opposed by the soil to the progress of the working tool, so as to only partially lift the working tool with respect to the soil by an amount proportional to the soil resistance encountered, while maintaining it at all times in substantial operating and working engagement with the soil without substantially changing its angle of attack with respect thereto.

4,063,599
METHOD AND APPARATUS FOR UNDERWATER PILE DRIVING
Joost W. Jansz, The Hague, Netherlands, assignor to Hollandsche Beton Groep N.V., Rijswijk, Netherlands
Filed May 18, 1976, Ser. No. 687,493
Claims priority, application Netherlands, May 21, 1975, 7505975
Int. Cl.² E02D *5/34*
U.S. Cl. 173—1 **7 Claims**

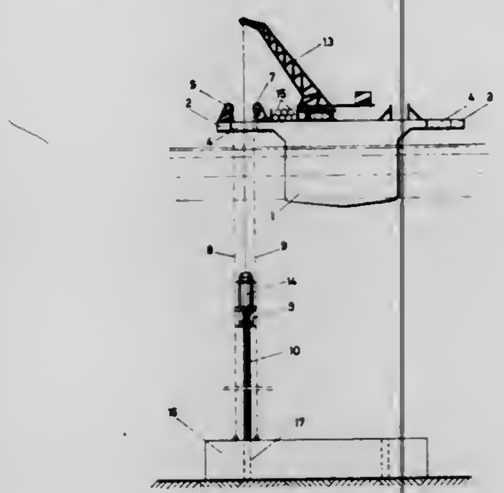

1. In an apparatus for underwater piledriving including a surface vessel having lifting means for lowering a pile and for manipulating a pile-driving apparatus, said pile-driving apparatus comprising a casing with a vertically movable pile hammer disposed therein, means for driving said pile hammer and a striking plate, said plate being disposed in the lower part of the casing, said casing below the striking plate being provided with a sleeve member, said member adapted to fit on the upper end of the pile, the improvement comprising: a quick-acting coupling device for detachably connecting and locking said sleeve member and said casing, and wherein the sleeve member may be supported independently of the casing by the vessel at a region concentric with the center line of the path of the pile, said vessel being provided with flexible guide means, said guide means running from the vessel parallel to the center line of the path of the pile towards the sea bed location where the pile is to be driven, and the guide means cooperating with guide eyes on the pile and the sleeve member.

4,063,600
POWER TOOL SAFETY MECHANISM
Casey S. Krzes, 1198 Meadow Lane, Grand Island, N.Y. 14072
Filed May 5, 1976, Ser. No. 683,505
Int. Cl.² B23Q *5/027*
U.S. Cl. 173—12 **8 Claims**

1. In a portable motor driven tool, a motor housing, a motor operatively disposed within said housing, an electrical circuit for said motor, a control switch in said circuit for controlling the supply of electrical power to said motor, a handle for grasping by the user to hold said tool during operation thereof, means connecting said handle to said housing in a manner permitting limited movement of said handle with respect to said housing between first and second positions, a normally-closed switch in said circuit and operatively mechanically connected to said handle and said housing such that said switch is closed when said handle is in said first position and said switch is open when said handle is in said second position, biasing means normally maintaining said handle in said first position, whereby in response to a force acting between said housing and said handle sufficient to overcome said biasing

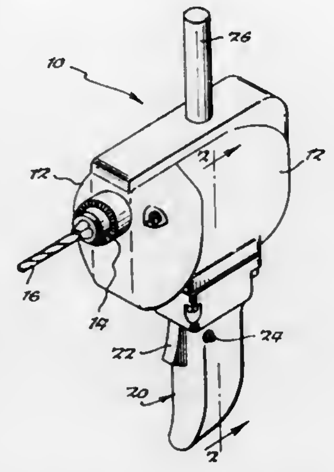

means, said handle is moved to said second position thereby opening said switch to open said electrical circuit for said motor.

4,063,601
ROTARY IMPACT TOOL
Paul Albert Biek, Houston, Tex., assignor to Dresser Industries, Inc., Dallas, Tex.
Filed Aug. 23, 1976, Ser. No. 716,496
Int. Cl.² B01D *23/28*
U.S. Cl. 173—93.6 **3 Claims**

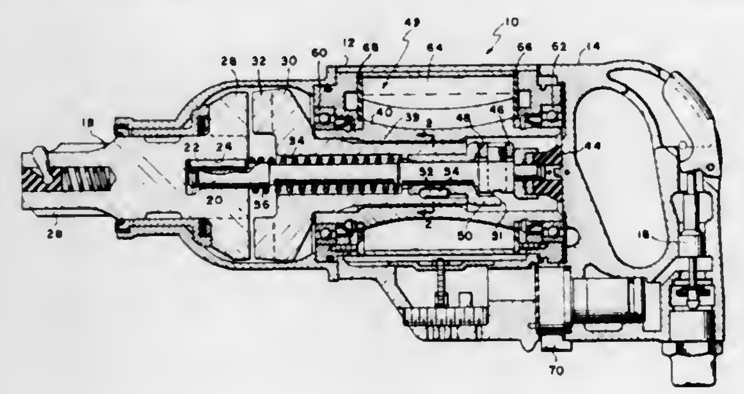

1. An improved rotary impact tool comprising:
a housing;
a rotor journaled in said housing, said rotor having an axial bore and having axially oriented splines in said bore;
means for supplying fluid into said housing to cause said rotor to rotate;
a hammer in said housing having an axial passageway extending therethrough, an enlarged end, and a reduced end portion located within said axial bore, said reduced end portion having splines on the exterior thereof mating with the splines in said axial bore for transmitting the rotary motion of said rotor to said hammer and for permitting relative axial movement therebetween;
an anvil journaled in said housing including an enlarged end confronting the enlarged end of said hammer and arranged to operably engage said hammer, a reduced end portion projecting outwardly of said housing, and a cavity formed in said enlarged end portion;
a shaft extending through said hammer having a first end located in said cavity and connected to said anvil for rotation therewith, and having a second end journaled in said housing;
a cam follower located in said bore, mounted on and rotatable with said shaft;
a cam member on said shaft within said bore and having a cam surface engaging said cam follower, said cam member having a reduced diameter portion located in said passageway and rotatable and axially movable with said hammer; and
resilient means urging said hammer relatively away from said anvil and said cam member toward said cam follower, whereby engagement of the cam surface on said cam member with said follower causes rotation of said shaft and anvil until a predetermined resistance to rotation of said anvil occurs, at which time said cam follower moves said cam member and hammer axially into impacting engagement with said anvil without exerting axial forces on said rotor.

4,063,602
DRILLING FLUID DIVERTER SYSTEM
James Damron Howell, Gretna, La.; Robert William Beck, George Hayden Bruce, and John David McLain, all of Houston, Tex., assignors to Exxon Production Research Company, Houston, Tex.
Continuation-in-part of Ser. No. 604,388, Aug. 13, 1975, abandoned. This application Nov. 1, 1976, Ser. No. 737,751
Int. Cl.² E21B *7/12*
U.S. Cl. 175—7 **19 Claims**

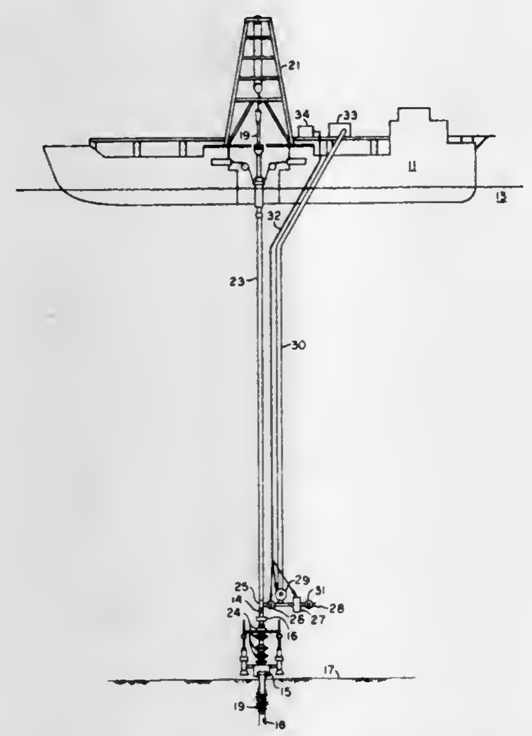

1. In a method of drilling a well in a subterranean formation beneath a body of water from a surface vessel wherein a drill string passes through a riser pipe which extends from said vessel to a subsea wellhead and then through a borehole under the body of water and wherein a drilling fluid is introduced into said drill string and is returned first through the annulus between said drill string and said borehole and then into the annulus between said drill string and said riser pipe, the improvement comprising:
a. monitoring the pressure within said riser pipe;
b. opening a surface controllable valve positioned near the bottom of said riser pipe to selectively divert the returning drilling fluid from said riser pipe whenever the pressure within said riser pipe exceeds said controlled hydrostatic pressure; and
c. closing said valve whenever the pressure within said riser pipe is below said controlled hydrostatic pressure.

4,063,603
DRILLING FLUID LUBRICANT
Jerry J. Rayborn, 2101 Holiday Drive, New Orleans, La. 70114
Continuation-in-part of Ser. No. 719,944, Sept. 2, 1976. This application Feb. 22, 1977, Ser. No. 770,590
Int. Cl.² E21B *7/00*
U.S. Cl. 175—65 **9 Claims**

1. The method of drilling a well comprising
rotating a drill string to cut a bore hole into the earth,
circulating a drilling mud down through the drill strings and thence up through the annulus between the drill string and the wall of the hole,
observing the torque required to rotate the drill string and, when such torque becomes undesirably high, adding sufficient solid plastic beads to reduce the torque,
said beads being smooth-surface spheres with a screen size within the range of 10 to 100 mesh but sufficiently small to pass through any shale shaker being used in the drilling operation,
said spheres being made of a plastic material having a specific gravity within the range of 1.1 to 1.5 and being insoluable in hydrocarbons and water and further having physical properties such that there is no substantial crushing of the beads during the drilling operation.

4,063,604
COMPUTING SCALE AND METHOD
Frank C. Rock, Santa Rosa, Calif., assignor to National Controls, Inc., Santa Rosa, Calif.
Division of Ser. No. 510,467, Sept. 30, 1974, Pat. No. 3,951,221. This application Dec. 19, 1975, Ser. No. 642,484
Int. Cl.² G01G *23/22, 3/14*
U.S. Cl. 177—25 **11 Claims**

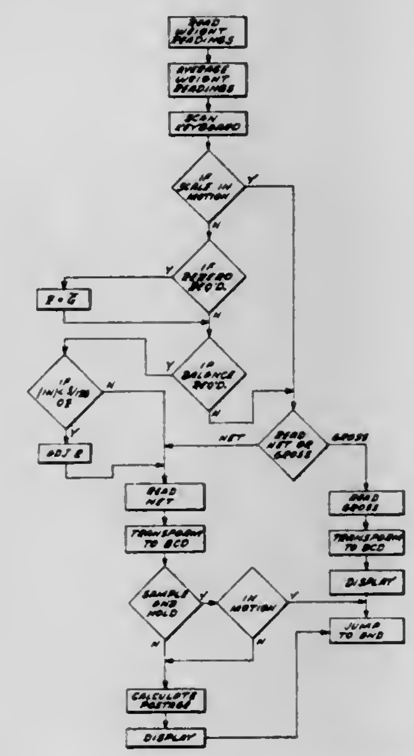

1. In a computing scale: a load receiving member for receiving a load to be weighed, means including a load cell connected to the load receiving member for providing an electrical signal corresponding to the weight of the load, means responsive to the electrical signal for providing successive digital signals representative of the instantaneous weight of the load at a predetermined clock rate, means for storing a plurality of the instantaneous weight signals on a rotating basis whereby the oldest of the stored signals is replaced by the instantaneous weight signal provided during each successive clock period, and means for determining the average of the stored signals to provide a continuously updated signal representative of the average instantaneous weight of the load.

4,063,605
FLUID POWER TRANSMISSION SYSTEM
MacKellar K. Graham, Birmingham, Mich., assignor to Sperry Rand Corporation, Troy, Mich.
Filed Oct. 12, 1976, Ser. No. 731,261
Int. Cl.² G01G *3/00, 21/28*
U.S. Cl. 177—225 **1 Claim**

1. A reservoir for hydraulic fluid power systems comprising a rigid container having an open mouth, a diaphragm of imper-

meable flexible sheet material closing the mouth of the container and dividing the container into a liquid compartment and a gas compartment, a cover having a gas inlet closing the mouth and diaphragm, a frame supporting the container on pivots for movement relative thereto, calibrated spring means connected between one end of the container and the frame for balancing the container and contents at various positions according to the weight thereof, means connected between the container and the frame for indicating such positions, a liquid

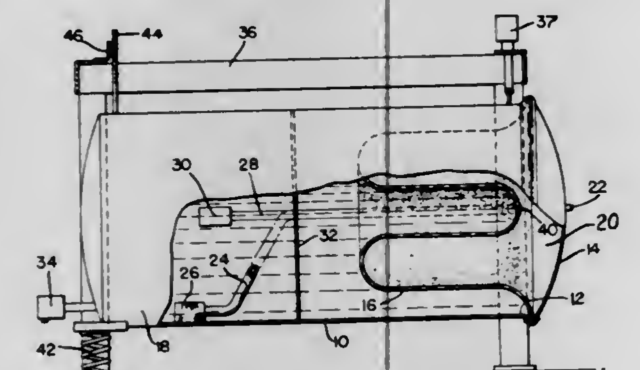

delivery conduit passing through one of the pivots and secured to the frame and a liquid return conduit passing through the other of the pivots and secured to the frame, means passing through the pivots and connected between each conduit and the container for accommodating relative motion between the container and the frame, a gas connection to the gas compartment, and barrier means preventing expansion of the diaphragm by gas applied through said gas inlet beyond a predetermined gas compartment volume significantly smaller than the total container volume.

4,063,606
ANTI-HYDROPLANING DEVICE
Ruth G. Makinson, 3710 Bodega Ave., Petaluma, Calif. 94952
Filed Sept. 13, 1976, Ser. No. 703,371
Int. Cl.² B60B *39/00*
U.S. Cl. 180—1 R **3 Claims**

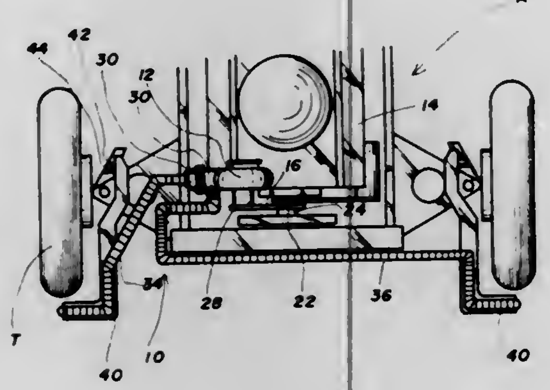

1. A hydroplane prevention system for a vehicle comprising:
a source of air pressure;
a hose connected to such source and terminating in a nozzle disposed immediately ahead of the traction portion of a vehicle wheel;
a second hose connected to such source and terminating in a nozzle disposed immediately ahead of the traction portion of a second vehicle wheel; and
means supporting each said nozzle on a steering linkage of the vehicle to remain in front of said vehicle wheels through turning movements thereof.

4,063,607
MOTORIZED MECHANICAL HORSE
James E. Patrick, General Delivery, Mayflower, Ark. 72106
Filed July 20, 1976, Ser. No. 705,871
Int. Cl.² B62D *11/04*
U.S. Cl. 180—6.5 **4 Claims**

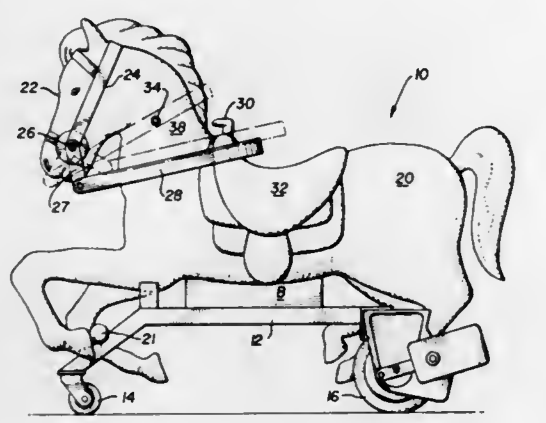

1. A motorized mechanical horse comprising, in combination, a body simulating a horse and having a bridle and rigid reins pivotally connected to bit shanks fixed to the ends of a rotatable bit; a pair of individually motorized driving wheels supporting one end of said body and a swiveled wheel supporting the other end thereof; power means for operating said motorized wheels; and rheostats including rotatable contacts mounted on said bit, to energize said motorized wheels in a forward or reverse direction at variable speeds upon forward or reverse movement of said rigid reins to rotate said bit mounted contacts.

4,063,608
HYDROSTATIC DRIVE VEHICLE
Patrick D. Sullivan, 3500 Granada St., No. 127, Santa Clara, Calif. 95051
Filed Nov. 25, 1974, Ser. No. 526,744
Int. Cl.² B60K *17/10*
U.S. Cl. 180—25 R **2 Claims**

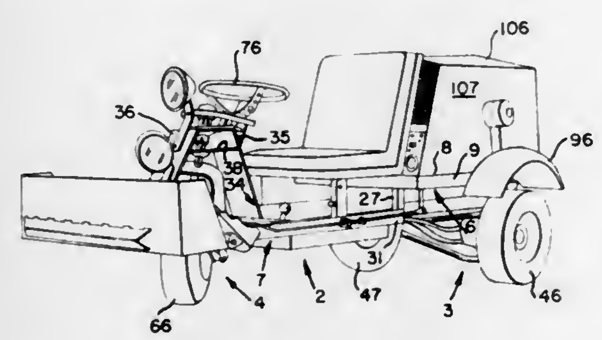

1. A hydrostatic drive vehicle comprising:
a. a rigid frame having a front and a rear section disposed end-to -end to form an elongated chassis;
b. a single front wheel assembly pivotally mounted on the front section of the frame and including a front fork on which a front wheel is journaled and a steering wheel for pivoting the fork;
c. a pair of rear wheels each independently suspended on the rear section of said frame and cooperating with said front wheel to provide a three point independent suspension for the vehicle;
d. a hydraulic motor connected directly to each of said rear wheels and adapted to selectively drive said wheels in either a forward or reverse direction;
e. hydraulic circuit means including said hydraulic motors, a pump for pressurizing said circuit, and drive means for the pump;
f. means for selectively controlling the flow of hydraulic fluid through said circuit to bypass said motors or to effect rotation of said motors in either a forward or reverse direction; and
g. independent suspension means for each rear wheel, the suspension means for each wheel comprising a frame having longitudinally extending bars opposite end portions of which are bent at an angle of about 30°, opposed corresponding end portions of said bars converging toward each other, a bearing assembly on said rear frame section pivotally receiving said converging end portions, a mounting plate fixed on said suspension frame to receive said hydraulic motor associated with each wheel, and spring means disposed between said suspension frame and said rear frame section to absorb impact shocks imposed on said rear wheels.

4,063,609
FOUR WHEEL DRIVE POWER TRAIN
Elmo Kincaid, 1660 Ashley Drive, Clarkston, Wash. 99403
Filed Oct. 29, 1975, Ser. No. 626,634
Int. Cl.² B60K *17/16*
U.S. Cl. 180—70 R **2 Claims**

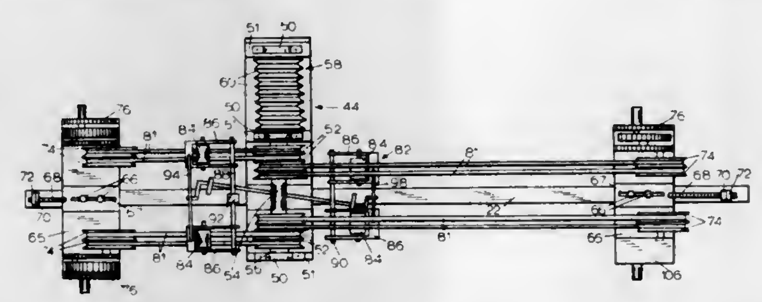

1. A four-wheel drive power train for use on a vehicle having an engine, a transmission driven by said engine, a front pair of wheels, and a rear pair of wheels, one of said pairs of wheels being articulated for steering, said power train comprising:
a shaft rotatably mounted transversely of said vehicle, means drivingly interconnecting said shaft to said transmission; at least four sets of split pulley sheave halves mounted on said shaft for rotation therewith and longitudinal slideability therealong, each of said sets containing a right hand sheave half and a left hand sheave half; at least four V-belt drive pulleys, each one of said pulleys being drivingly connected to only one of said wheels; at least four drive V-belts, each of said belts interengaging only one of said pulleys with only one of said sets of sheave halves; and means for limiting the longitudinal extent of said slideability of said sheave halves along said shaft such that separation of the halves of one of said sets causes convergence of the halves of the others of said sets whereby each of said wheels is driven differentially of every other one of said wheels.

4,063,610
VEHICLE THEFT-PREVENTION SYSTEM
Robert A. Shilling, 22310 39th Ave. West, Mountlake Terrace, Wash. 98043
Filed Mar. 22, 1976, Ser. No. 668,838
Int. Cl.² B60R *25/04*
U.S. Cl. 180—114 **1 Claim**

1. A vehicle theft-prevention system for selectively disabling an internal combustion engine having an ignition coil with its primary connected between a supply wire and distributor, said system comprising a concealed switch having a first terminal connected to a ground point of said vehicle and a second terminal in electrical contact with the supply wire through a shunt at a point spaced apart from said coil such that the said shunt wire is not readily discoverable by examining said coil so that the primary of said coil is shunted by said switch when

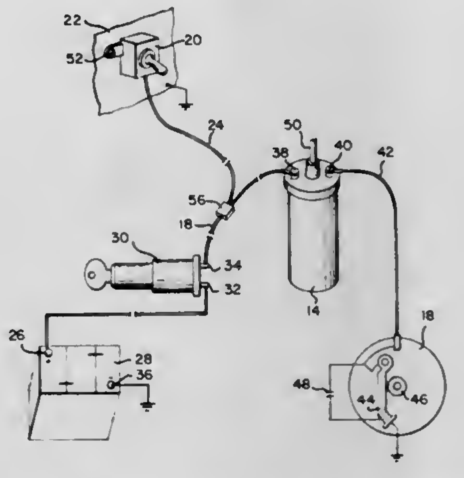

said switch is in its closed position thereby rendering said internal combustion engine inoperable.

4,063,611
SURFACE EFFECT VEHICLE
Roland N. Anderson, 28090 Van Dyke, Warren, Mich. 48070
Filed May 19, 1976, Ser. No. 687,955
Int. Cl.² B60V *1/00, 3/02*
U.S. Cl. 180—119 **1 Claim**

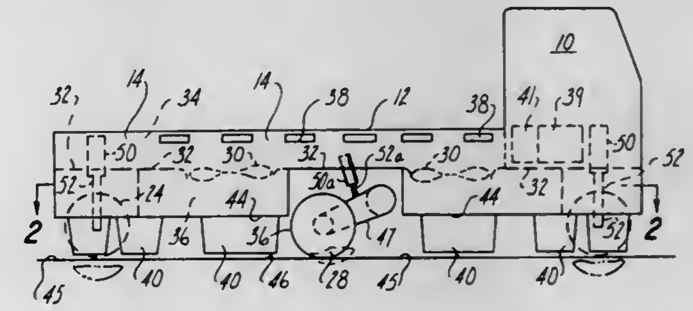

1. A surface effect vehicle comprising a hull (14) having a front end and a rear end, said hull having a longitudinal front-to-rear centerline and a transverse side-to-side centerline;
air cushion means (40) carried by the hull on its undersurface (44) for exerting a downward force on the terrain and an upward lift force on the hull;
a first ground-contact wheel (22) located at the front end of the hull on its longitudinal centerline; a second ground-contact wheel (24) located at the rear end of the hull on its longitudinal centerline; third and fourth ground-contact wheels located at respective side areas of the hull approximately on its transverse centerline;
combined steering-suspension means for each of the first and second wheels; each steering-suspension means comprising a piston-cylinder assembly (52, 50) oriented vertically between the hull and associated wheel for rotational adjustment around a central axis passing approximately through the wheel axis in the wheel center plane, and power mechanism (72) for bodily turning the piston-cylinder assembly around its central axis for steering action; each piston-cylinder assembly being resiliently pressurized whereby the piston-cylinder assembly maintains the associated wheel in firm tractive engagement with the terrain without disturbing the attitude of the hull;
each piston-cylinder assembly defining an upper chamber (66) and a lower chamber(68) interconnected through a flow-restrictor orifice (70), pressurized gas within each upper chamber, and hydraulic liquid occupying each lower chamber and orifice;
combined drive-suspension means for each of the third and fourth wheels; each drive-suspension means comprising an external trailing arm (47) swingably attached to the hull for arcuate vertical movement around a transverse pivot axis (49) located a short distance forwardly of the afore-

mentioned hull transverse centerline, a wheel axle carried at the rear end of the trailing arm, drive means (55) within the trailing arm for transmitting a drive force to the wheel axle, and a piston-cylinder means (*52a, 50a*) trained between the hull and each trailing arm; each of the last-mentioned piston-cylinder means being resiliently pressurized with a gas-liquid charge, whereby the third and fourth wheels are maintained in firm tractive engagement with the terrain without disturbing the hull attitude.

4,063,612
MOTORIZED GOLF BAG CART
Morris Weiss, Pembroke Pines, Fla., assignor to Electronics Sports Products, Inc., Dania, Fla.
Filed May 24, 1976, Ser. No. 689,037
Int. Cl.² B62D *51/04*
U.S. Cl. 180—195 **11 Claims**

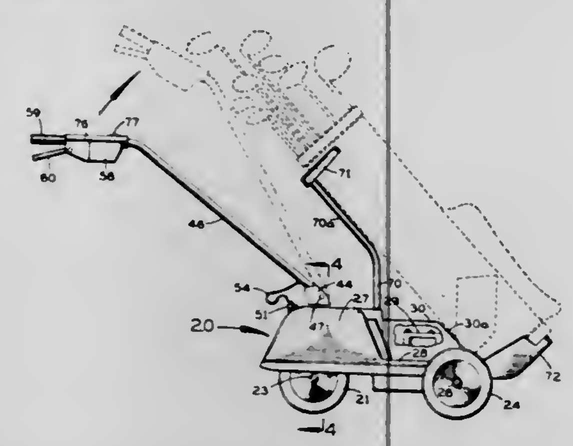

1. In a motor-driven golf bag cart having:
a gold bag support mounted on ground-engaging wheels;
a battery-operated motor on said support in driving relationship with one or more of said wheels;
and a steering handle extending up from said golf bag support to be manipulated by the user for steering the cart;
the improvement which comprises the combination of:
a rheostat connected electrically to said motor to control its speed, said rheostat being mounted on the handle at its upper end;
a squeeze grip at the upper end of said steering handle, said squeeze grip comprising an integral hand grip segment on the upper end of said handle and a lever pivoted on said handle and extending in confronting relationship to said integral hand grip segment for pivotal adjustment toward or away from the latter;
and mechanical coupling means acting between said squeeze grip and said rheostat to adjust the rheostat from the squeeze grip substantially without lost motion to set the motor speed in accordance with the manual squeeze exerted on the squeeze grip by the user;
said rheostat having a rotatable shaft which controls the rheostat setting in accordance with its rotational position;
and said mechanical coupling means comprising an arcuate toothed rack connected rigidly to said lever for pivotal movement in unison therewith and a pinion meshing with said rack and connected rigidly to said shaft of the rheostat.

4,063,613
CONTROL MEANS FOR PRESSURE FLUID VIBRATORS FOR GENERATING SEISMIC WAVES IN THE EARTH
Daniel Silverman, 5969 S. Birmingham St., Tulsa, Okla. 74105
Continuation-in-part of Ser. No. 296,669, Oct. 11, 1972, Pat. No. 3,840,090. This application Aug. 7, 1974, Ser. No. 495,383
The portion of the term of this patent subsequent to Oct. 8, 1991, has been disclaimed.
Int. Cl.² G01V *1/14*
U.S. Cl. 181—119 **12 Claims**

1. In a vibrator system, including vibrator means comprising two parts reciprocable with respect to each other, reaction mass means connected to one part and base plate means connected to the other part, high pressure fluid accumulator means for supplying high pressure fluid, and first valve means and first control means to repetitively inject said high pressure fluid into said vibrator means, said vibrator means generating a pulsating force output of magnitude F, and weighting means pressing with a steady force W on said baseplate means, through at least one support means, said at least one support means including at least one compliance;

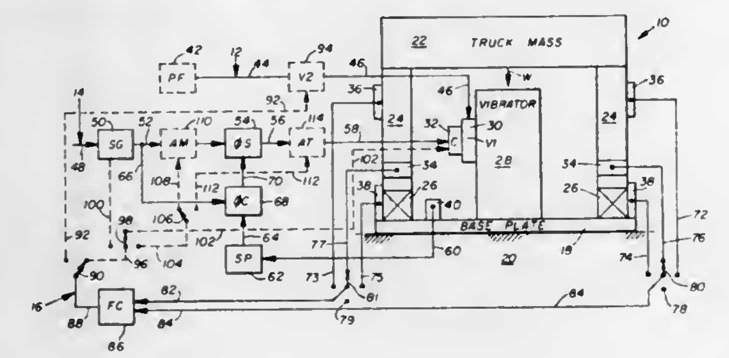

the improvement in means to control the magnitude of the force output of said vibrating means, so that the peak value of the force output F of said vibrator means will always be less than the force W applied by said weighting means, comprising;
a. force measuring means in said at least one support means responsive to the force applied between said weighting means and said baseplate means; and
b. second control means responsive to said force measuring means for controlling said first valve means to limit the maximum value of said force output F.

4,063,614
COMBINATION LOUDSPEAKER AND SIGN HOLDER
Gerd H. Iven, 20 Josaly Drive, West Hill, Ontario, Canada (M1C 2N5)
Filed Nov. 22, 1976, Ser. No. 743,885
Claims priority, application Germany, Dec. 4, 1975, 7538667[U]
Int. Cl.² H04R *11/02*
U.S. Cl. 181—152 **4 Claims**

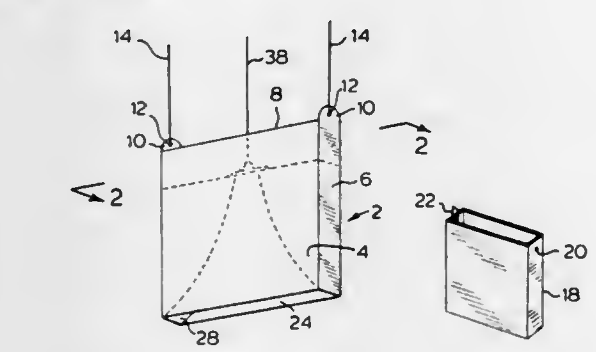

1. A loudspeaker and sign holder combination comprising:
a. a housing having a pair of enlarged flat parallel side walls, a pair of flat narrow end walls connecting the ends of said side walls, a top wall and an open bottom, said side, end and top walls all being formed of a corrugated plastic material, each end wall having a portion projecting above said top wall to form a vertically extending end tab at the top of each end wall,
b. an acoustic horn within said housing, said horn having a vertical axis and a pair of horn end walls one on each side of said axis, said horn end walls extending between said housing side walls, one on each side of said axis, said horn end walls also being formed of said corrugated plastic material and being spaced apart at their tops to define an aperture at the top of said horn and diverging outwardly and downwardly toward said open bottom of said housing,

c. a speaker mounted at the top of said horn over said aperture,
d. an advertising display sign sleeve encircling and covering said hosuing, said sleeve being open at its bottom to permit sound to be radiated therethrough and also being open at its top, said sleeve covering said end tabs,
e. each end tab having a hole therein for a suspending cable to pass therethrough, said sleeve having a pair of holes adjacent its upper end, one aligned with each of the holes in said end tabs, also to allow said suspending cable to pass therethrough,
f. and a suspending cable extending through said holes in said sleeve and end tabs at each end of said housing for suspending said housing in the air with the bottom thereof hanging downwardly and also for retaining said sleeve to said housing.

4,063,615
ESCAPE DEVICE
Donald E. Knepp, 1343 E. Bowman, South Bend, Ind. 46613
Filed Dec. 18, 1975, Ser. No. 642,181
Int. Cl.² B66D *5/04*
U.S. Cl. 182—5 **4 Claims**

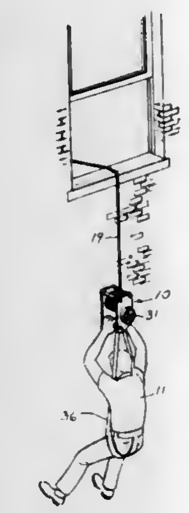

1. An escape device comprising a housing, a drum journaled in said housing, a cable coiled about said drum and having a free end means for securement to a building part, a body support means for the escape device user carried by said housing, brake means carried by said housing and associated with said drum for retarding rotation of the drum during descent of the housing and the uncoiling of said cable from the drum with the free end means of the cable being secured to said building part and said body support carrying said user, said brake means including actuator means by which said user can selectively retard rotation of said drum during descent of the housing, said actuator means including a pivoted handle journaled to said housing, friction brake material, means for urging said brake material into contact with said drum upon movement of the handle to retard rotation of the drum, said drum including an annular braking surface, a band extending about said braking surface and having first and second ends, said brake material carried by said band adjacent said braking surface, said band having its first end anchored to said housing, said brake material urging means extending between said handle and band secured end to draw said band constrictively about said drum with said brake material contacting said braking surface when said handle is moved, said brake material urging means including a lever, means pivotally connecting said lever at a location intermediate the ends of the lever to said housing, one end of said lever connected to said band second end, connecting means extending between said lever other end and said handle, said housing including spaced side plates journaling said drum therebetween with said drum being rotatable about an axis, said handle extending between said side plates, means journaling the ends of said handle in said side plates for rotative movement of the handle about an axis generally paralleling the axis of rotation of said drum, said connecting means constituting flexible means having one end secured to said lever other end and having its opposite end secured to said handle offset from the axis of rotation of the handle for providing a pull on said lever during handle rotation to draw said band constrictively about said drum.

4,063,616
SAFETY LADDER WITH CASTER ASSEMBLY MOVEABLE POSITIVELY TO A RETRACTED POSITION
Ernest F. Gutierrez, P.O. Box 84, Bristol, Ill. 60512
Filed July 6, 1976, Ser. No. 702,885
Int. Cl.² E06C *1/397, 5/00*
U.S. Cl. 182—17 **9 Claims**

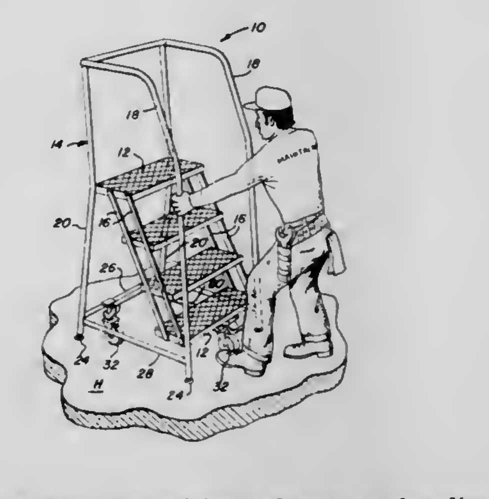

1. A ladder assembly comprising a frame, a plurality of steps and at least three support feet for supporting said ladder assembly on a generally horizontal surface, said ladder assembly including a caster assembly upon which the ladder is adapted to be rollingly transported from one location to another,
said caster assembly including at least three casters which are positively and conjointly movable between a first retracted position in which said support feet stably support said ladder assembly on said horizontal surface with said casters elevated thereabove and a second transporting position in which said casters stably support said ladder assembly on said horizontal surface with said support feet elevated thereabove,
tubular guide means fixedly secured to said ladder assembly reciprocatably mounting said casters for reciprocating movement between said first and second positions, spring means urging said casters into said first retracted position, linkage means interconnecting said casters for conjoint movement, and actuating means for operating said linkage means to move said casters from said first to said second position.

4,063,617
CABLE LUBRICATOR
Walter James Shenk, Millington, N.J., assignor to Bell Telephone Laboratories, Incorporated, Murray Hill, N.J.
Division of Ser. No. 603,279, Aug. 11, 1975, Pat. No. 4,046,225. This application Nov. 15, 1976, Ser. No. 741,725
Int. Cl.² F16N *15/00*
U.S. Cl. 184—15 R **1 Claim**

1. Apparatus for applying lubricating material to extended lengths of cable preparatory to pulling through narrow conduits comprising
a substantially cylindrical housing open at both ends for enclosing a section of cable to be lubricated,
a plurality of flat flexible annular discs having a central opening defined by an inner circumference smaller than the outer circumference of cable to be lubricated and at least six uniformly spaced slits extending radially outward from said inner circumference toward but short of an outer circumference,
means for facilitating the uniform spreading of beads of lubricating materials over the outer surface of a cable being lubricated further comprising

first means for fixedly attaching at least one of said discs to close off the cable entrance end of said housing, and

second means for fixedly attaching a first and a second of said discs in concentric juxtaposition with said six or more radial slits being staggered uniformly from disc to disc and

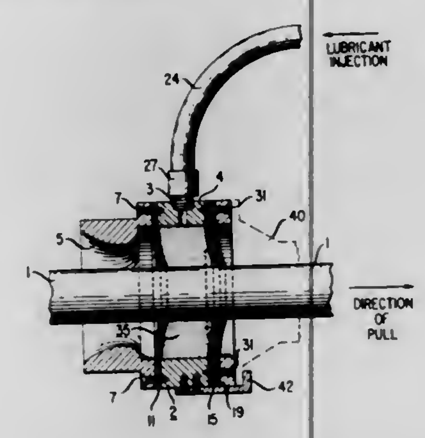

the second disc which is the outermost disc being relatively more flexible than said first disc to close off the cable exit end of said housing whereby said first disc forms and said second disc uniformly spreads said beads of lubricating material.

4,063,618
GREASE GUN AND PRESSURE RELIEF VALVE THEREFOR
David L. O'Dell, Mishawaka, Ind., assignor to Wheelabrator-Frye, Inc., Mishawaka, Ind.
Filed Dec. 13, 1976, Ser. No. 749,688
Int. Cl.² F16N *3/12*
U.S. Cl. 184—105 A **7 Claims**

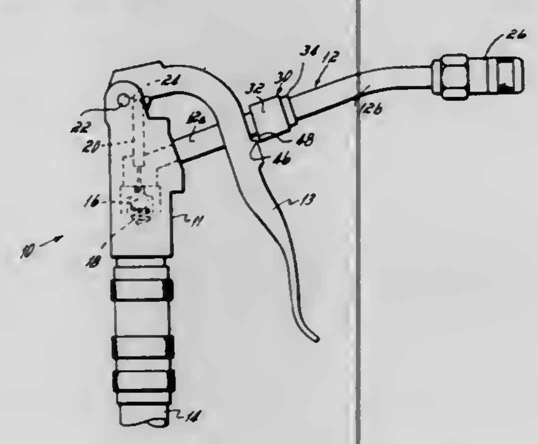

1. A lubricant flow control handle for supplying grease to a grease fitting, said handle comprising,

a handle body adapted to be connected at one end to a high pressure, grease containing hose,

a handle extension connected at one end to the opposite end of said body,

a valve containing coupling secured to the outlet end of said handle extension, said valve containing coupling being operable to prevent grease from being ejected from the handle extension except when said coupling is properly located over a grease fitting,

a flow control valve located interiorly of said body and operable to control the flow of grease through said body and into said extension,

pressure relief valve means operable to relieve high pressure grease entrapped in said extension, between said flow control valve and said valve containing coupling when both said flow control valve and said valve containing coupling are in a closed condition, and

a manually operable trigger pivotally mounted upon said body, said trigger being operable on movement in a first direction from a neutral centered position to open said control valve and on movement from said neutral centered position in a direction opposite said first direction to open said pressure relief valve means, said trigger being normally maintained by spring pressure in said neutral centered position in which both said control valve and said pressure relief valve are closed.

4,063,619
ELEVATOR PLATFORM STRUCTURE
Robert E. Drews, 25 Faye Drive, Taylor Mill, Ky. 41015
Filed Nov. 8, 1976, Ser. No. 739,611
Int. Cl.² B66B *7/00*
U.S. Cl. 187—17 **3 Claims**

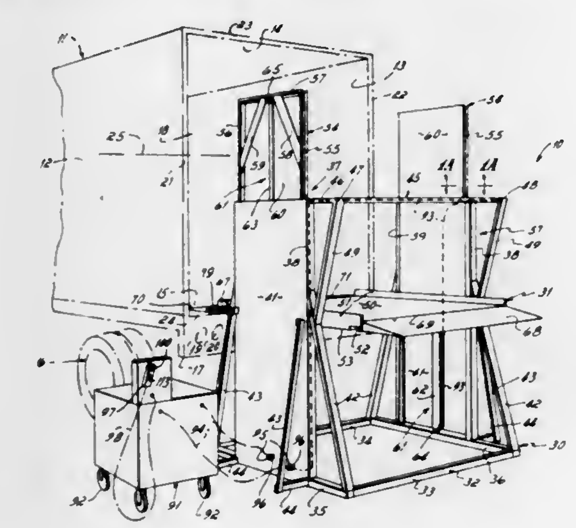

1. An elevator platform structure comprising

an elevator platform horizontally carried within a framework, said elevator platform being movable within said framework between a lower level and an upper level,

a lifting device connecting said elevator platform and said framework, said lifting device being adapted to raise and lower said elevator platform between said upper and lower levels as desired by an operator,

a pivotable ramp at one end edge of said platform, said ramp being pivotable on an axis between a first position at which said ramp is substantially horizontal with said elevator platform in a load/unload attitude, and a second position at which said ramp is vertically upraised relative to said elevator platform in a stop attitude,

a bellcrank arm connecting said ramp and said platform, one end of said bellcrank arm being pivotally connected to said platform to define said axis and the other end of said bellcrank arm being fixed to said ramp,

a single tension lock up spring fixed at one end to said pivotable ramp and at the other end to said elevator platform on one side of said platform, said tension spring being located on one side of said ramp axis when said ramp is in the load/unload attitude so as to retain said ramp in that position, and being located on the other side of said ramp axis when said ramp is in the stop attitude so as to retain said ramp in that position as well,

a first immobile stop mounted on said elevator platform, said first stop cooperating with said bellcrank arm's upper arm portion to retain said ramp in the stop attitude as biased by said single tension spring, and

a second immobile stop also mounted on said elevator platform, said second stop cooperating with said bellcrank arm's lower arm portion to retain said ramp in the load/unload attitude as biased by said single tension spring.

4,063,620
ELEVATOR SYSTEM
Alan F. Mandel, Pittsburgh, Pa.; Andrew F. Kirsch, Edison, N.J., and Kenneth M. Eichler, McKeesport, Pa., assignors to Westinghouse Electric Corporation, Pittsburgh, Pa.
Filed July 9, 1976, Ser. No. 703,890
Int. Cl.² B66B *1/18*
U.S. Cl. 187—29 R **13 Claims**

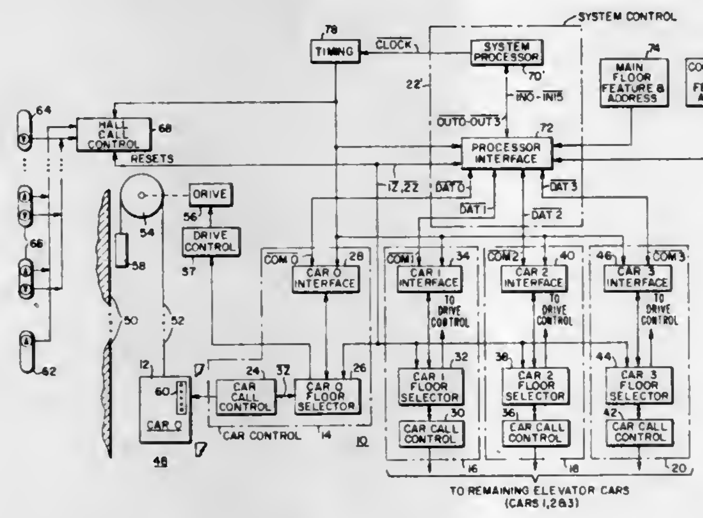

1. An elevator system for a building having a plurality of floors, comprising:

a plurality of elevator cars mounted in a building to serve the floors therein,

car call means associated with each of said elevator cars for registering car calls,

and supervisory control means assigning, clearing and reassigning service directions from the floors to said plurality of elevator cars according to a predetermined strategy,

said supervisory control means including car call related means which assigns unassigned service directions ahead of each car associated with floors at which each car will stop due to registered car calls, and limit means limiting such car call related assignments to a predetermined number N per car, which are the N closest car calls ahead of the associated car.

4,063,621
HYDRAULIC BRAKE ACTUATOR
Helmut Heibel, Moschheim, Germany, assignor to Girling Limited, Birmingham, England
Continuation of Ser. No. 513,088, Oct. 8, 1974, abandoned. This application May 28, 1976, Ser. No. 690,871
Claims priority, application United Kingdom, Oct. 9, 1973, 47004/73
Int. Cl.² F16D *55/02*
U.S. Cl. 188—72.6 **11 Claims**

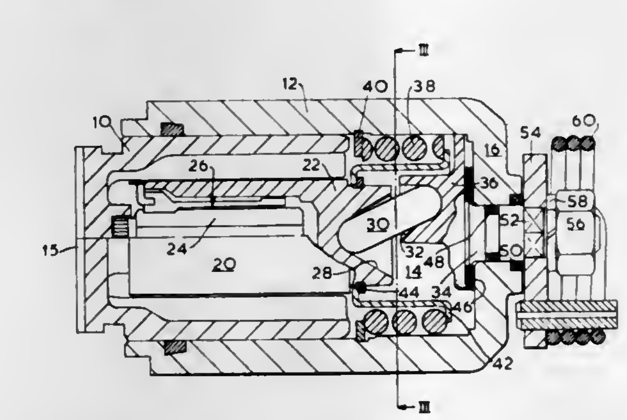

11. A mechanical actuator for a vehicle brake, comprising a linearly displaceable peg for displacing a friction element, a mechanical actuating member for effecting peg displacement, means mounting said mechanical actuating member for rotation between first and second peg displacing positions about an axis aligned with the direction of peg displacement, a seating in said actuating member and a seating in an adjacent end of said peg, said seatings being off-set with respect to each other, when said actuating member is in its first position, means for preventing movement of said actuating member seating in the direction of said axis during movement of said actuating member between its first and second peg displacing positions and an inclined strut engaging in said seatings and interconnecting said peg and said actuating member, said seating in said actuating member being also off-set with respect to said axis and said axis being off-set with respect to the seating in said peg, whereby rotation of said actuating member about said axis from its first towards its second peg displacing position reduces the inclination of said strut with respect to the direction of said peg displacement and thereby displaces said peg away from said actuating member.

4,063,622
FLUID PRESSURE OPERABLE BRAKE ACTUATORS WITH FLUID OPERABLE BRAKE SOCK AND RELEASE
John Dale Coleman, and Philip Norman Paginton, both of London, England, assignors to Westinghouse Brake & Signal Co. Ltd., London, England
Filed Mar. 8, 1976, Ser. No. 664,862
Int. Cl.² B60T *17/16*
U.S. Cl. 188—153 R **4 Claims**

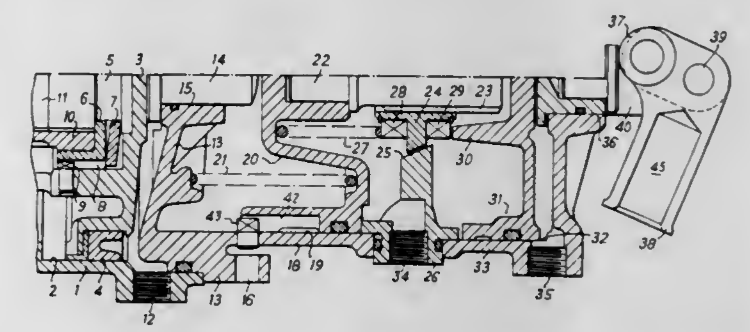

1. A fluid pressure operable brake actuator including a housing having a first fluid pressure responsive member for exerting a brake applying force to an output member, said first member forming a movable wall of a first chamber having a brake-applying pressure input port, a second chamber sealed from said first chamber and having movable therein second and third pressure responsive members spaced from each other and movable relative to each other, a second fluid pressure input port in communication with the space between said second and third members, said third member forming a movable wall of a third chamber having a third input port, means engageable with said second pressure responsive member and sealingly slidable in the housing to cooperate with the first pressure responsive member such that force can be applied from said second pressure responsive member to said first pressure responsive member through said engageable means, a one-way clutching device coupled to the second pressure responsive member to retain it in engagement with said engageable means after application of a fluid pressure to the second input port such that said second pressure responsive member acts through said engageable means on said first pressure responsive member to lock-in a force applied to the output member due to a fluid pressure at the first input port, and means for releasing and clutching device upon selective movement of the third pressure responsive member in response to a fluid pressure at the third fluid pressure input port so as to permit release of said locked-in force.

4,063,623
FLUID COUPLING WITH CENTRIFUGAL AND TORQUE RESPONSIVE LOCK UP CLUTCH
John Saxon Ivey, Bloomfield Hills, Mich., and Russell Earl Silberschlag, Glen Ellyn, Ill., assignors to Borg-Warner Corporation, Chicago, Ill.
Filed June 29, 1976, Ser. No. 700,998
Int. Cl.² F16H *45/02;* **F16D** *43/14*
U.S. Cl. 192—3.31 **14 Claims**

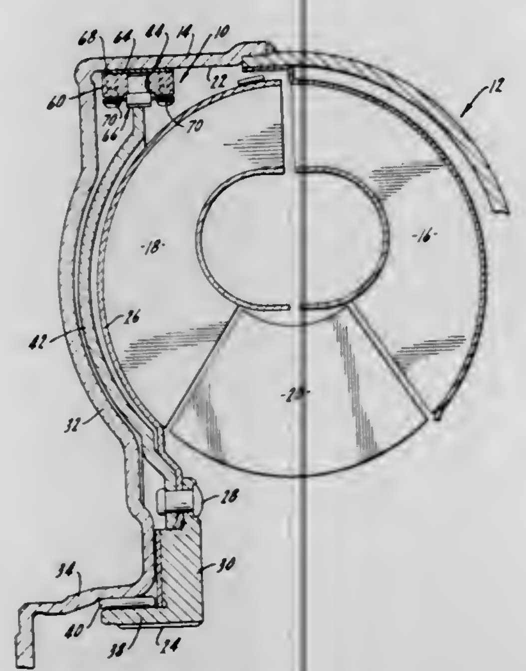

1. An engaging mechanism comprising a relatively thin disc member attached to a first rotating member, said first rotating member rotating within a second rotating member, said disc having a plurality of peripheral apertures each having a friction device mounted therein, said apertures being partly defined by a cam surface engaged by said friction devices during operation of said engaging mechanism, said apertures further including retaining means engageable by retaining means secured to said friction devices to retain said friction devices in said apertures, whereby centrifugal force will urge said friction devices into engagement with said second rotating member and said cam means will act after initial engagement to induce a wedging engagement of said friction devices between said rotating members.

4,063,624
HIGH-RELIABILITY AIR BRAKE SYSTEM WITH TRANSMISSION NEUTRALIZER PROVIDING A PLURALITY OF OPERATIONAL MODES
Henry E. Beck; Jimmie L. Hasten, both of Oswego, and Ernest C. Sindelar, Aurora, all of Ill., assignors to Caterpillar Tractor Co., Peoria, Ill.
Filed June 14, 1976, Ser. No. 695,879
Int. Cl.² B60K *29/00*
U.S. Cl. 192—4 A **20 Claims**

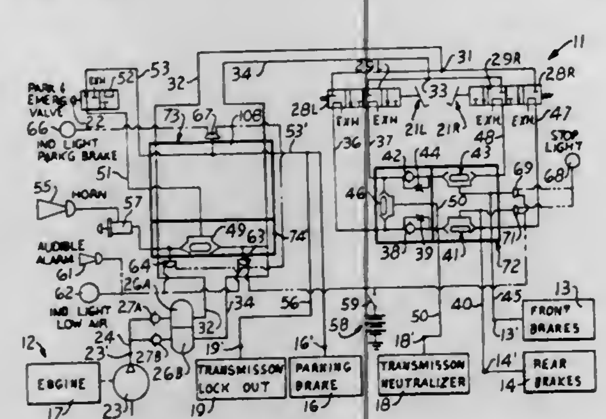

1. An air brake control system for a vehicle having an air compressor, front and rear brakes, and first and second brake control elements, comprising:
first and second air reservoirs each connected to the compressor;
first means responsive to the first brake control element for controllably communicating an air stream from one of the air reservoirs with the front brake while communicating the rear brake with an air stream from the other of said reservoirs;
second means responsive to the second brake control element for controllably communicating an air stream from one of the air reservoirs with the front brake while communicating the rear brake with an air stream from the other of said reservoirs; and
third means associated with air streams of only a selected one of the first and second means for providing a function absent in said first and second means, said
third means comprising a transmission neutralizer.

4,063,625
IMPROVED SCREW OR NUT RUNNER
Gunnar Christer Hansson, Stockholm, Sweden, assignor to Atlas Copco Aktiebolag, Nacka, Sweden
Filed Feb. 11, 1976, Ser. No. 657,313
Claims priority, application Sweden, Feb. 11, 1975, 7501491
Int. Cl.² F16D *43/20, 67/02*
U.S. Cl. 192—17 R **10 Claims**

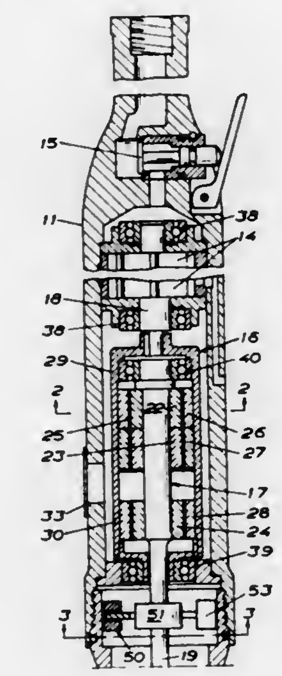

1. A screw or nut runner comprising:
a housing,
a motor,
an output shaft, and
a power transmission connecting said motor to said output shaft,
said power transmission comprising a torque release clutch, and brake means located after said torque release clutch in the power train, and including means responsive to centrifugal forces for braking said power transmission and said output shaft relative to said housing by a decreasing magnitude during decreasing rotation speed of said output shaft.

4,063,626
SILENT RATCHET
Donald F. Solomon, Newport Beach, Calif., assignor to Jo-Line Tools, Inc., Anaheim, Calif.
Filed June 10, 1976, Ser. No. 694,776
Int. Cl.² F16D *41/16*
U.S. Cl. 192—43.1 **5 Claims**

1. A ratcheting tool for applying torque to a workpiece comprising:
a. a torque transmitting member rotatable about its own axis and having one element shaped to engage a workpiece and

having a coaxial driver element defined in the shape of a cylinder longitudinally disected by an axially extending planar bearing wall and having an intermediate neck section of reduced cross sectional area, and defining a transverse channel therein at a longitudinal distance from said neck section,
b. a work handle terminating in an annular ring having an interior surface divided into a friction bearing section and a toothed section coaxial therewith, the latter section being equipped with radially interiorally directed ratchet teeth, wherein said annular ring and said driver element are positioned in mutually coaxial arrangement to define a cavity between the interior surface of said ring and said planar bearing wall,
c. a pawl located within said cavity and having an arcuate surface equipped with ratchet teeth engageable with said ratchet teeth of said annular ring and having an opposing bearing surface of overall convex configuration and formed with a planar interior segment flanked by planar end segments each segment being alternatively positionable in contact with said planar bearing wall, whereby said ratchet teeth may be engaged for clockwise and counterclockwise rotation of said ring when said pawl is alternatively in clockwise and counterclockwise engagement positions with a respective one of said planar end segments lying in contact with said planar bearing wall, and whereby said ratchet teeth may be disengaged entirely when said pawl is in an intermediate position with said planar interior segment positioned in contact with said planar bearing wall,

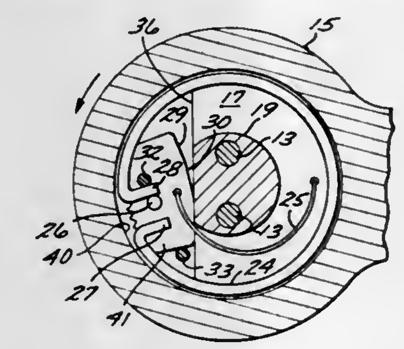

d. an actuating pin extending longitudinally from said pawl,
e. a friction brake ring encircling the greater portion of said driver element at the neck section thereof and biased radially outward against said friction bearing section of said annular ring and passing atop said pawl and having inwardly extending flanges that bracket said actuating pin, whereby rotation of said annular ring causes the frictional forces at said friction bearing section thereof to carry said friction brake ring in the same direction of rotation to cause one of said flanges to engage said actuating pin to move said pawl from its intermediate position to one of its engaged positions,
f. a directional indexing member positioned in annular disposition about said driver element and defining two sets of opposing radially extending detent depressions coplanar with and alternatively positionable adjacent to said transverse channel of said driver element,
g. dual engagement protrusions spaced from each other and carried by said indexing member and extending therefrom for selective lateral engagement with said flanges to limit the rotational movement of said brake ring relative to said indexing member,
h. detent means located within said channel and biased radially outward from said driver element to selectively engage either of said sets of detent depressions in said indexing member, and
i. spring means located within an annular space around said neck section of said driver element and secured to said pawl and said driver element and designed to urge said pawl toward said intermediate position.

4,063,627
PNEUMATIC CONTROL SYSTEM FOR A PRESS
Donald R. Wright, Cheviot, Ohio, assignor to Textron, Inc., Providence, R.I.
Filed Nov. 10, 1976, Ser. No. 740,768
Int. Cl.² F16D *9/00*
U.S. Cl. 192—131 R **10 Claims**

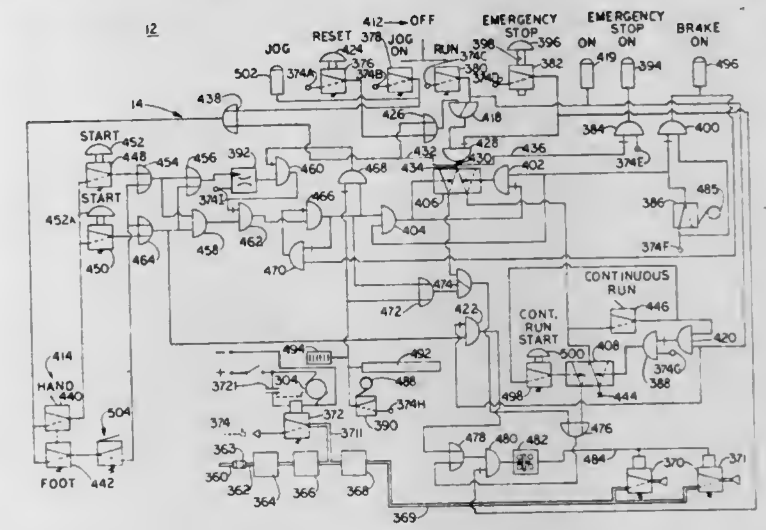

1. A pneumatic control system for a press which comprises a pair of start switches, means for supplying air under pressure to the start switches, an or element having one of its input ports connected to each start switch, an and element having one of its input ports connected to each start switch, a normally closed time delay element having its input port connected to an output port of the or element, a not element having its pressure port connected to an output port of the and element, means connected to the output port of the not element for actuating the press, and means connecting the output port of the normally closed time delay element to a switching port of the not element, whereby the press is actuated when both of the start switches are actuated with the time interval between actuation of the start switches being less than the time delay of the normally closed time delay element.

4,063,628
LEVELING DISCHARGE SYSTEM FOR READY-MIX TRUCKS
Eugene Michael Jenkins, 206 E. Camina Colegio, Santa Maria, Calif. 93454
Filed Oct. 26, 1976, Ser. No. 735,823
Int. Cl.² B65G *11/12, 11/18*
U.S. Cl. 193—10 **9 Claims**

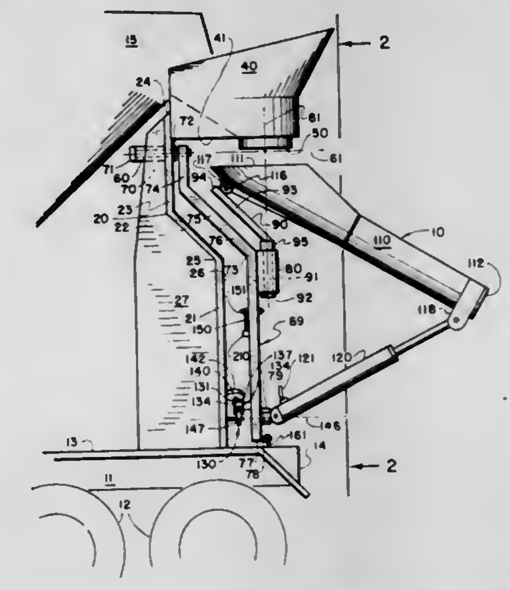

1. In combination with a truck having a transporting hopper for flowable material and an opening through which such material can be discharged, a leveling discharge system comprising:
A. a first element mounted on the truck for pivotal movement about a substantially horizontal axis disposed longi-

tudinally of the truck and downwardly extended from said axis;

B. a second element mounted on said first element for pivotal movement about a substantially erect axis below said horizontal longitudinal axis and in substantially right angular relation thereto; and

C. a chute having a receiving end and a distal end, said chute being disposed below the opening and mounted on the second element for pivotal movement about a substantially horizontal axis disposed transversely of the truck, said horizontal transverse axis being below the horizontal longitudinal axis.

4,063,629

COIN CHUTES WITH FUNNEL FOR SELECTION THEREBETWEEN

Roger G. Gordon, San Leandro, Calif., assignor to Safe Rack, Inc., San Leandro, Calif.

Filed Oct. 12, 1976, Ser. No. 731,136

Int. Cl.² G07F *11/00*

U.S. Cl. 194—1 K **5 Claims**

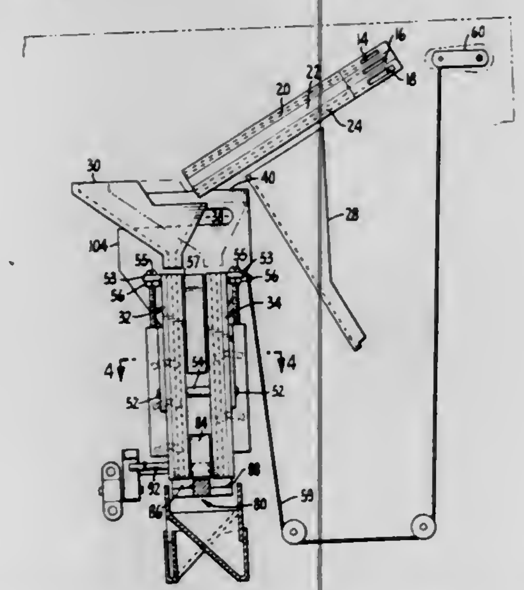

1. In a coin operated mechanism having a pair of coin chutes wherein coins of a proper denomination in one of said chutes will release said mechanism, said mechanism including slots in each of said chutes, a U-shaped member adapted to fit into said slot, said U-shaped member having a projection fitting inside the slot and being pivotly mounted at the side of said slot, whereby a coin dropped on said projection will cause said member to tilt and allow a coin to pass but will lock if said coin is moved in the upward direction, and having a slide mechanism including a cam mounted under said coin chutes whereby a coin locked by one of said U-shaped members will depress said cam and allow the slide mechanism to be actuated, the improvement comprising:

a. a funnel-like member mounted over said coin chutes, said funnel-like member having a narrow outlet corresponding in dimensions to one of said chutes;

b. sliding means for said funnel-like member between the two said chutes;

c. two spaced detent means on said sliding means corresponding in location to said chutes, whereby said funnel-like member can be slid from one detent to the other and will be held over the selected one of said chutes.

4,063,630

TYPEWRITER IMPACT POSITION ADJUSTMENT MECHANISM

William Ray Crowe, and Thomas Michael Paulson, both of Lexington, Ky., assignors to International Business Machines Corporation, Armonk, N.Y.

Filed June 25, 1976, Ser. No. 699,909

Int. Cl.² B41J *1/32*

U.S. Cl. 197—53 **8 Claims**

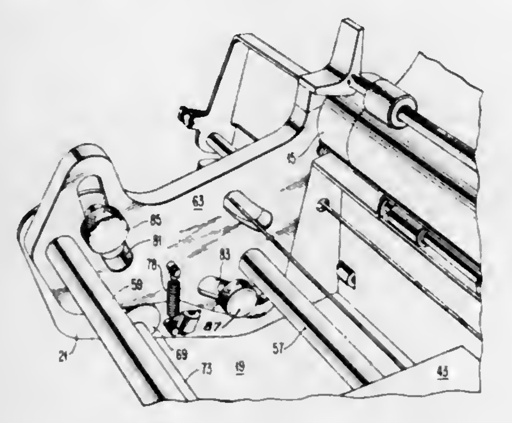

1. A printer for forming images upon a document sheet and including print line visibility enhancement means comprising:

a print element having at least one type symbol thereon for traveling over a path a fixed distance and for impacting the sheet with the type symbol at a given angle of strike between the sheet and path of travel;

a platen having a curved platen surface for retaining the sheet thereon while said sheet and platen surface are impacted by the type symbol, said curved platen surface having a center of curvature;

a platen carrier means for maintaining the platen at a constant vertical position;

a print element carrier means for maintaining the print element at a vertical position;

print line visibility enhancement adjustment means connected to said print element carrier means for independently adjusting the relative vertical position of the print element with respect to the platen about an axis proximate to the center of curvature of the curved platen surface, to thereby maintain approximately the same distance of travel and angle of strike of said type symbol on said platen surface, said platen being maintained at said constant vertical position at least during said relative vertical position adjustment, said type symbol impacting said sheet and platen surface at different vertical positions of said sheet and platen surface depending upon the adjusted relative position.

4,063,631

PAPER GUIDE

Robert M. DuRoss, Homer, and Richard D. Aiken, Killawog, both of N.Y., assignors to SCM Corporation, New York, N.Y.

Filed Dec. 13, 1976, Ser. No. 749,858

Int. Cl.² B41J *13/30*

U.S. Cl. 197—142 **14 Claims**

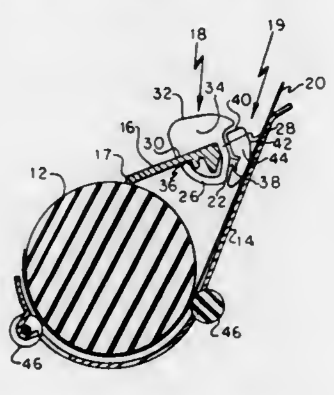

1. A paper guide for a typewriter to selectively guide a sheet of paper, the typewriter having a two position paper table and an erasure table spaced from the paper table to define a paper

chute and a platen for supporting the sheet of paper for printing thereon, the paper guide comprising:

a sleeve member supported on the erasure table for yieldable sliding frictional cooperation therewith; and

a yieldable guide member carried by said sleeve member abuts against the paper table when located in either of the two positions, said yieldable guide member includes a guiding surface substantially spanning the paper chute with the paper table located in either of the two positions for guiding an edge of the sheet of paper when inserting the sheet of paper into the paper chute.

4,063,632

SWINGABLE ARCUATE GUIDE FOR SELECTIVELY ORIENTING ARTICLES

Otto Neth, and Robert A. Schmitt, both of Vancouver, Wash., assignors to Columbia Machine, Inc., Vancouver, Wash.

Filed June 23, 1976, Ser. No. 699,200

Int. Cl.² B65G *47/24*

U.S. Cl. 198—374 **5 Claims**

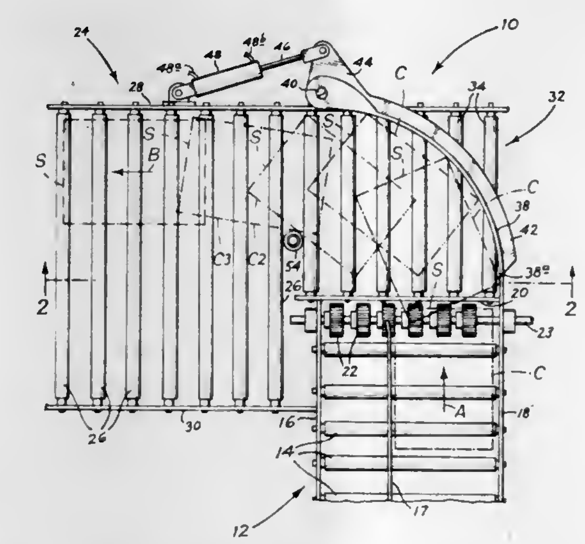

1. Apparatus for orienting articles comprising

first conveyor means operable for supporting and conveying articles in a first direction,

second conveyor means disposed at least partially in the path of said first conveyor means operable for supporting and conveying articles in a second direction generally perpendicular to said first direction, said second conveyor means arranged to receive articles transferred from said first conveyor means, and

article orienting means disposed adjacent said first and second conveyor means including an elongate, arcuate guide member disposed in a plane generally parallel to and above a plane occupied by said second conveyor means with one end thereof pivotally mounted adjacent said second conveyor means, said arcuate guide member being swingable across a portion of said second conveyor means and operable for selective positioning between a first, article engaging position for permitting a transferred article to engage said arcuate guide member and travel in an arcuate path therealong until a side which initially faced downstream in said first direction is turned to face at least partially downstream in said second direction and a second, non-article-engaging position for permitting a transferred article to move in said second direction unturned relative to said first direction, said arcuate guide member also having a length dimensioned to permit an end opposite said pivotally mounted end to extend across at least a portion of the width of said second conveyor means to a location adjacent the end of said first conveyor means when said arcuate guide member is disposed in said first-article engaging position.

4,063,633

VACUUM PLUG FEED MACHINE

Floyd Vanmeda Hall, Durham, N.C., assignor to Liggett Group Inc., Durham, N.C.

Filed Nov. 10, 1976, Ser. No. 740,655

Int. Cl.² B65G *47/12*

U.S. Cl. 198—455 **7 Claims**

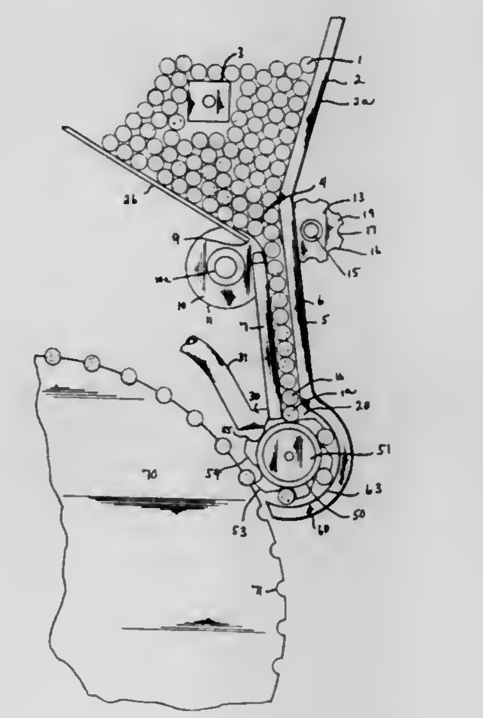

1. The combination comprising:

a magazine for a supply of cylindrical rods;

a chute extending downwardly from said magazine, said chute having spaced apart walls to define a flow path for a single row of cylindrical rods;

a rod separator means positioned at the junction of said chute with said magazine for delivering a continued flow of cylindrical rods from said magazine into said chute;

said rod separation means including a cylindrical roller having an axle providing rotation therefor and a circumferential surface, said axle being positioned outside said magazine and said chute parallel to cylindrical rods in said magazine; each of said magazine and said chute having a slot in a respective wall thereof to accommodate said roller, said roller circumferential surface protruding through said slots to contact the cylindrical rods and a cylindrically shaped bumping means opposite said roller having a fluted circumferential surface and axle providing rotation therefor, said latter axle being mounted outside said chute in parallel with said roller and said chute having a slot to accommodate said bumping means, said fluted circumferential surface protruding through said slot into said chute, said cylindrical roller and said cylindrically shaped bumping means rotating in the same direction with the peripheral surface of said cylndrical roller moving in the direction of flow and faster than said rods and with the peripheral surface of said cylindrically shaped bumping means moving in the direction against the flow of said rods and bumping thereagainst;

a vacuum means adjacent an exit of said chute for receiving said rods from said chute singularly, said vacuum means exerting a downward force on the lower most filter rods contained in said chute; and

a rod transfer means for removing said rods from said vacuum means in preselected spaced-apart sequences.

4,063,634

OSCILLATING FLATWARE WASHING DEVICE

Kenneth E. Perry, Wellesley, Mass., assignor to Adamation, Inc., Newton, Mass.

Filed Nov. 22, 1976, Ser. No. 743,596

Int. Cl.² B65G *17/16*

U.S. Cl. 198—478 **8 Claims**

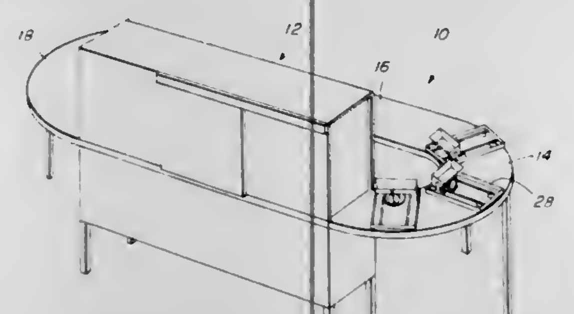

1. A flatware washer for use in a warewasher which warewasher includes a plurality of dollys adapted to travel in a conveyor pan, which flatware washer comprises:

a. a frame adapted to be secured to and travel on a conveyor pan;

b. a cradle rotatably secured to the frame and adapted to carry flatware;

c. a drive assembly secured to the frame which includes

i. a first drive means in contacting engagement with a portion of the conveyor pan;

ii. a second drive means in driving engagement with the first drive means; and,

iii. a third drive means in driving engagement with the second drive means; and

d. a rocker arm rotatably secured at one end to the cradle and eccentrically pinned at the other end to the third drive means whereby when the frame travels on the conveyor pan the first drive means rotates driving the second drive means which in turn drives the third drive means causing the rocker arm to oscillate the cradle about a fixed axis.

4,063,635

SUPPLY BIN AND FEEDER SYSTEM COMBINATION FOR TEXTILE COPS OR PIRNS

René Heckel, Horgen, Switzerland, assignor to Maschinenfabrik Schweiter AG, Horgen, Switzerland

Filed Dec. 1, 1976, Ser. No. 746,406

Claims priority, application Switzerland, Dec. 18, 1975, 16418/75

Int. Cl.² B65G *47/00*

U.S. Cl. 198—531 **12 Claims**

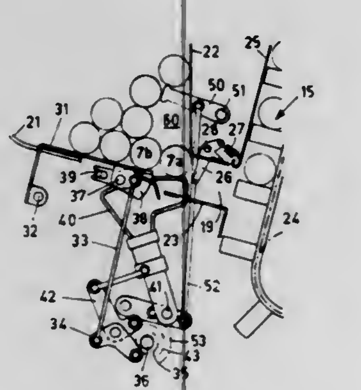

1. The combination of a supply bin (14) for textile cops and a feeder system to feed the cops, singly, to a removal station (24), and to separate the cops during the feeding operation to prevent pressure by cops in the supply bin on a cop (7*a*) being removed for feeding, having

a bin structure having a removal opening (19) formed therein;

a biassed flap (26) releasably closing the removal opening, and ejection means (40) engageable with the lowermost cop to feed the cop to the removal means,

wherein, in accordance with the invention,

at least a portion of the bottom of the supply bin structure (14) is inclined forwardly towards the removal opening (19) and includes

a movable base plate (31), the base plate being mounted for movement between a feed position in which the base plate is inclined in the direction of inclination of the bottom of the supply bin and towards the opening, and a re-supply position in which the base plate is inclined upwardly and away from the removal opening (19);

and the ejection means comprises

a movable ejector (40) occupying a space at least approximately of the size of the geometric outline of a cop, said ejector element (40) being mounted for movement between a rest position in which the ejector element is located immediately in advance of the cop removal opening (19) and closes off said opening, a re-supply position in which the ejector element (40) is located in a position beneath the bottom of the supply bin (14), and a feed position in which the ejector (40) is engaging a cop (7*a*) to feed said cop in advance thereof, along the downwardly inclined bottom of the supply bin and pushing said cop against said biassed flap (26) and through said removal opening.

4,063,636

DISCONNECTABLE DRIVING ROLLER FOR ROLLER CONVEYORS

Hans vom Stein, Wermelskirchen, Germany, assignor to Interroll Fordertechnik GmbH & Co. KG, Dhunn, Germany

Filed Apr. 28, 1976, Ser. No. 681,329

Claims priority, application Germany, Apr. 30, 1975, 2519374

Int. Cl.² B65G *13/06*

U.S. Cl. 198—781 **23 Claims**

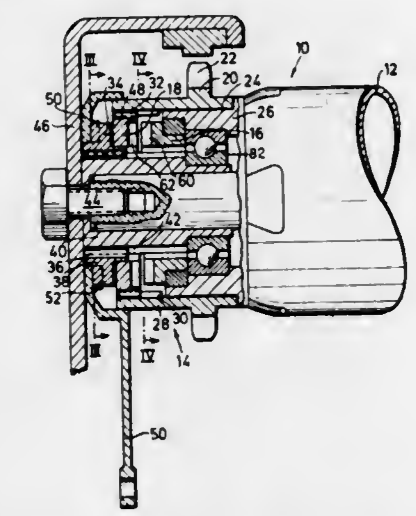

1. A disconnectable driving roller for roller conveyors having individual driving roller groups isolatable from a common conveyor drive comprising:

a driving wheel,

a roller axle, a roller having a one end, said roller being mounted at said one end on said roller axle;

driving means for driving said roller, said driving means having dog coupling means for drivingly connecting and disconnecting said driving wheel to and from said roller;

said dog coupling means including a first coupling means mounted for sliding axial movement between an operatively engaged position and an operatively disengaged position of said driving means on said roller axle;

coupling lever means pivotally mounted on said roller axle, for pivoting in a pivotal plane transverse to the roller axle for moving said first coupling means between an operatively engaged and an operatively disengaged position, said coupling lever having an axially projecting cam with a cam surface substantially in a plane parallel to said pivotal plane;

an actuating disc mounted for sliding axial movement while substantially fixed rotationally on said roller axle between said first coupling means and said coupling lever means; and

said actuating disc having a cam follower with a cam surface substantially in a plane parallel to said pivotal plane and arranged for cooperation with said cam of said coupling lever means so that when said coupling lever means is pivoted from said disengaged position to said engaged position, said first coupling means is moved axially from said operatively disengaged position to said operatively engaged position by said actuating disc whereby said driving means is drivingly connected to said roller.

4,063,637

DEVICE FOR PROVIDING A STORAGE COMPARTMENT FOR A HELMET

Byron Danforth, 16 Manchester Road, Eastchester, N.Y. 10709

Filed Aug. 20, 1976, Ser. No. 716,122

Int. Cl.² B65D *85/15;* **B62J** *11/00*

U.S. Cl. 206—8 **5 Claims**

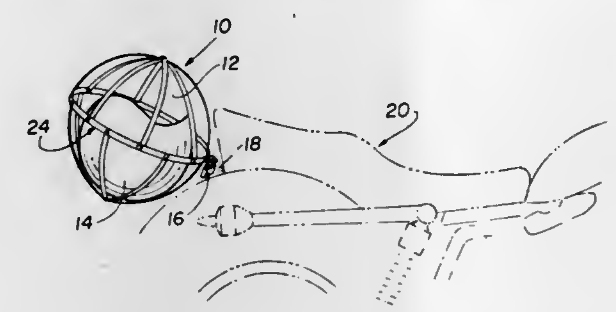

1. A helmet-encircling device for providing a helmet storage compartment comprising plural horizontally oriented rigid, leaf-like members of flexible construction material pivotally interconnected end to end in flexed relation so as to bound a circumference of said helmet storage compartment, and plural transversely oriented rigid, leaf-like members of similar flexible construction material extending in flexed relation in opposite directions from spaced pivotal connections about said circumference to a common juncture for interconnection to each other so as to bound upper and lower helmet-enclosing spheres for said helmet storage compartment, said members having overlapping portions at said pivotal connections whereby after use said members of said device are movable about said pivotal connections into a relatively flat compact storage condition.

4,063,638

DIRECT DISPENSING PACKAGING OF SURGICAL SUTURES

Ronald Keith Marwood, Dorion, Canada, assignor to American Cyanamid Company, Stamford, Conn.

Filed Mar. 16, 1977, Ser. No. 778,190

Int. Cl.² A61L *17/02*

U.S. Cl. 206—63.3 **6 Claims**

1. A direct dispensing surgical suture label comprising:

a center panel having recesses near the top and bottom portion, said recesses adapted to receive winding pins for winding a suture strand, a gapped and round corner on one side of the top portion, and a diagonal cut formed on the top portion of the other corner;

a suture strand cover having a diagonal cut on the top portion of said strand cover and adjacent said center panel forming a V-shaped groove between said panel and said cover, notches along the top edge, slits initiating from said notches and terminating at dispensing holes at the top portion of said cover, winding pin holes near the top and bottom portion of said cover aligned with said recesses, a rectangular free space window attached to the said top winding pin hole, and surgical needle holding slits near the bottom corner portions of said cover;

a needle cover having a gapped and curved corner adjacent to said gapped and rounded corner of said center panel such that a groove is formed between said needle cover and said panel, the other corner of the top portion being curved, a notch on the top edge of said needle cover, an angular cut intiating from said notch and terminating in a

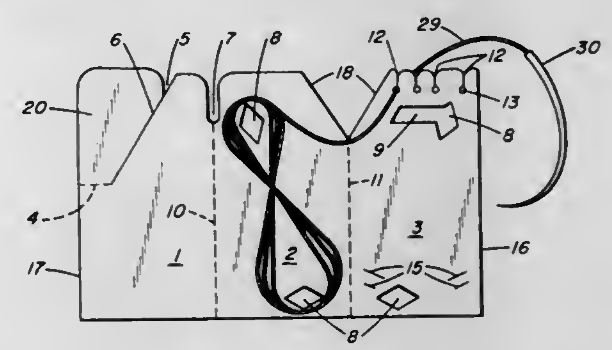

score line perpendicular to the outer edge of said needle cover;

whereby, when said suture cover is folded over said center panel and said needle cover is folded over said suture cover and a surgical suture is contained under the strand cover with the end of said suture placed in said dispensing hole and when the portion of said needle cover between said notch and said curved corner on the outer edge is lifted, the end of said suture is directly dispensed from said label.

4,063,639

DISPLAY AND STORAGE DEVICE FOR SMALL ARTICLES

Robert F. Grant, 3234 S. Cuyler, Berwyn, Ill. 60402

Filed May 27, 1976, Ser. No. 690,789

Int. Cl.² B65D *85/58;* **A47F** *3/00*

U.S. Cl. 206—0.82 **11 Claims**

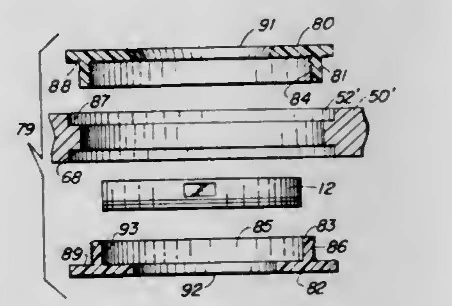

1. In a display assembly for at least one article, the combination comprising a mounting board having first and second opposing surfaces, and at least one aperture extending through both of said surfaces, and device storage means including first and second cup-shaped members which when assembled together form a storage device for enclosing said article, said first and second cup members each being generally cylindrical in shape and having a generally planar base portion and an annular wall portion extending perpendicularly to said base portion, said wall portion of said first cup member defining a central recess for receiving said article, said first cup member being mounted on said board with its base portion disposed adjacent to said first surface of said board and having its annular wall portion extending within said aperture, said second cup member being mounted on said board with its base portion disposed adjacent to said second surface of said board and having its annular wall portion extending within said aperture, the inner diameter of the annular wall portion of said second cup member being substantially the same as the outer diameter of the annular wall portion of said first cup member to permit said

first and second cup members to be assembled together on said board with said annular wall portions in telescopic engagement to provide an enclosed compartment for said article, one of said cup members having engaging means formed on a surface thereof, and said other cup member having receptor means formed on a surface thereof which receives said engaging means when said cup members are assembled together to connect said first cup member to said second cup member, said base portions of said first and second cup members being of a transparant material providing opposing viewing surfaces to permit viewing of said article; said first and second cup members having respective first and second projecting portions formed integrally with peripheral edges of said base portions, and extending outwardly therefrom and generally coplanar with said base portions, said first and second projecting portions engaging said first and second opposing surfaces, respectively, of said board adjacent to said aperture when said first and second cup members are connected together to thereby secure said device storage means to said mounting board.

4,063,640
MERCHANDISE PACKAGE
Michael T. Wilkinson, Memphis, Tenn., assignor to Combustion and Controls Company, Inc., Memphis, Tenn.
Filed Mar. 9, 1977, Ser. No. 775,918
Int. Cl.² B65D *71/00*
U.S. Cl. 206—231 **10 Claims**

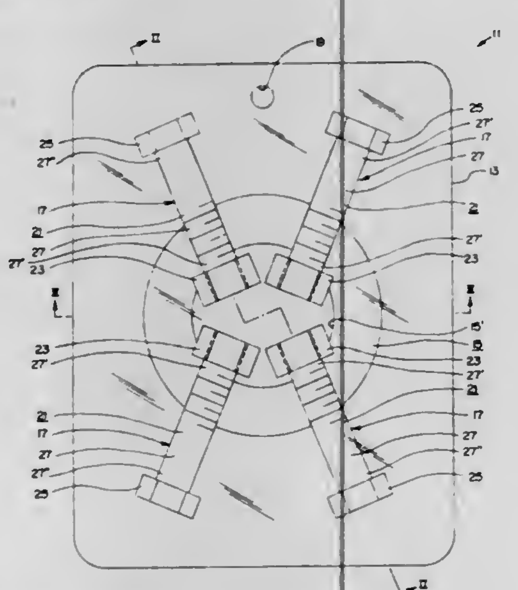

1. A merchandise package comprising:
a. a substantially rigid plate-like means;
b. a substantially flat gasket means positioned flat on said plate-like means;
c. a plurality of bolt means positioned on said plate-like means, each of said plurality of bolt means including a bolt member and a nut member threadingly attached to said bolt member, said bolt member having a head portion, each of said plurality of bolt means being positioned flat on said plate-like means with said nut member and said head portion of said bolt member in contact with said plate being positioned one on either side of a portion of said gasket means so as to form a bridge thereover; and
d. means for fixedly securing said gasket means and said plurality of bolt means to said plate-like means.

4,063,641
TWO-SIDE LEGIBLE PACKAGING FILM AND PACKAGE MADE THEREFROM
Harold H. Kuehn, San Mateo, and Peter M. Mittmann, Palo Alto, both of Calif., assignors to Philip Morris Industrial Incorporated, Milwaukee, Wis.
Filed Mar. 5, 1975, Ser. No. 555,495
Int. Cl.² B32B *5/16;* B65D *65/8, 65/14, 75/32, 75/36*
U.S. Cl. 206—484 **8 Claims**

1. A flexible packaging film comprising, in combination:
a first layer of transparent material, and first printed indicia on a first surface thereof,
a second layer of transparent material, and second printed indicia on a first surface thereof,
said first and second layers being joined together with their respective first surfaces in contact with and essentially continuously joined to each other over the whole of their facing surfaces and with the first indicia legible through the first layer and the second indicia legible through the second layer.

6. A packaging container comprising two members joined together to define a commodity storage compartment, wherein:
1. the first member is a transparent packaging film,

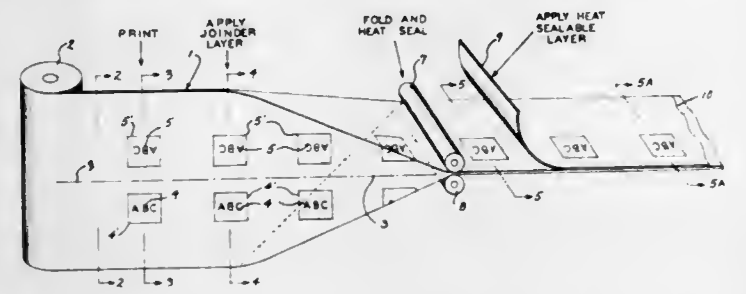

2. the second member is a two-side legible film consisting of first, second and third layers joined together,
a. the first layer being joined to the second layer along contacting surfaces thereof,
b. the first and second layers each having printed indicia on their said contacting surfaces, with the indicia on a layer being legible through its surface opposite from said contacting surfaces,
c. the third layer consisting of transparent heat-sealable material,
3. portions of the third layer of the second member being heat-sealed to the first member to define a product containing compartment therebetween.

4,063,642
APPARATUS FOR SINGLING SMALL PARTS
Walter Sticht, Wankhamerstrasse 8, and Wolfgang Steinleitner, Wienerstrasse 36, both of Attnang-Puchheim, Austria
Filed Dec. 29, 1975, Ser. No. 644,621
Claims priority, application Austria, Dec. 13, 1974, 9988/74
Int. Cl.² B65G *51/02*
U.S. Cl. 209—73 **19 Claims**

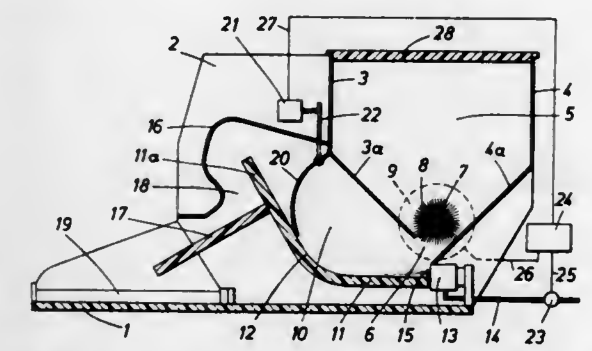

1. Apparatus for singling small parts which have a largest dimension and a second-largest dimension, comprising
a holding container adapted to hold a plurality of said parts which are in contact with each other,
receiving means adapted to support simultaneously a plurality of separated parts,
transfer means defining a path of travel which communicates with said container, said transfer means being arranged to deliver parts along said path of travel to said receiving means,
discharge means for discharging parts out of said holding container to said path of travel,
the dimensions of said discharge means and path of travel being at least in one direction a multiple of the second-largest dimension of each of said parts whereby said discharge means and path of travel permit simultaneous passage of a plurality of separate parts side-by-side,
a discharge station, and
sorting means adapted to receive parts from said receiving means and arranged to deliver to said discharge station only separate parts having a predetermined, desired orientation and to reject other parts, and
collecting means arranged to receive the parts rejected by said sorting means.

4,063,643
SIZE CONTROL
Clifford Wickstead, Greenford, England, assignor to Rockware Glass Limited, Greenford, England
Continuation of Ser. No. 514,555, Oct. 11, 1974, abandoned. This application Mar. 4, 1976, Ser. No. 663,709
Claims priority, application United Kingdom, Feb. 18, 1974, 7339/74
Int. Cl.² B07C *5/08*
U.S. Cl. 209—82 **4 Claims**

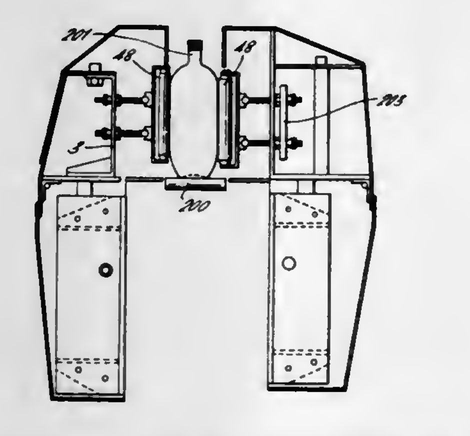

1. An apparatus for size monitoring articles fed through a checking station comprising, in combination conveyer means for solely supporting and carrying articles in spaced apart relation into, through and out of said checking station, a first fixed position feeler means including an elongated roller freely rotatable about its axis which is substantially perpendicular to the direction of travel of articles on the conveyor and positioned to just engage the outer most surface of each article on the conveyor, a second swingable feeler means also including an elongated roller freely rotatable about its axis which is substantially perpendicular to the direction of travel of articles on the conveyor, the second swingable feeler means being mounted on and biased by a spring plate towards the first fixed feeler means by an amount insufficient to arrest an article on the conveyor being carried between the fixed and swingable feeler means, damping means connected to the swingable feeler means for damping oscillations thereof, a detector associated with the second swingable feeler means and adapted to detect when the swingable feeler means passes a given point, and reject means located downstream of the checking station and adjacent the conveyor, said reject means being adapted, in response to a signal from said detector means, to remove an article from the conveyor.

4,063,644
PROCESS FOR NONDESTRUCTIVE INSPECTION
Kenneth G. Hoffman, Massapequa Park; Robert R. Maller, Plainview, and Robert W. Messler, Jr., Farmingdale, all of N.Y., assignors to Grumman Aerospace Corporation, Bethpage, N.Y.
Continuation of Ser. No. 379,077, July 13, 1973, abandoned. This application Oct. 12, 1976, Ser. No. 731,700
Int. Cl.² B07C *5/342;* G01N *21/16*
U.S. Cl. 209—111.6 **5 Claims**

1. The process of non-destructive inspection for thermal damage in a chromium layer comprising the steps of:
preparing a chromium plated article to be inspected to obtain a "water-break" free surface;
deplating the chromium surface about 0.00005–0.0002 inch by having the article immersed in an electrolyte of an electrochemical system and passing electric current through said article for a period of time required to obtain the limited deplating;
illuminating the chromium surface by a directional light source;
pinpointing areas of the chromium surface having different coloration than the normal background appearance; and
rejecting articles having different coloration due to thermal damage than the background.

4,063,645
SORTING TRAY
David Canterman, and Thomas Michael Bergin, both of New Salem, Mass., assignors to Brand "X" Company, Tucson, Ariz.
Filed May 24, 1976, Ser. No. 689,069
Int. Cl.² B07C *7/00*
U.S. Cl. 209—122 **9 Claims**

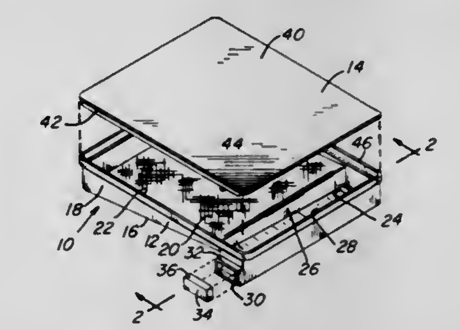

1. A sorting and storage tray comprising: a body portion; a main sorting and storage section of said body portion having at least a lower portion thereof which slopes upwardly to an upper portion thereof; an elongated secondary storage section of said body portion adjacent said upper portion; said secondary storage section extending in a direction generally transverse to said main storage section with the uppermost surface of said secondary storage section which is adjacent said upper portion being no higher than the uppermost planar surface of said main sorting and storage section; and an intermediate wall extending continuously between the uppermost extent of said main sorting and storage section and the adjacent side of said secondary storage section.

4,063,646
LATCHED ROD RACK
Otto Stahl, Jr., Annandale, N.J., assignor to National Manufacturing Company, Chatham, N.J.
Filed Dec. 16, 1975, Ser. No. 641,273
Int. Cl.² A47F *7/00*
U.S. Cl. 211—4 **5 Claims**

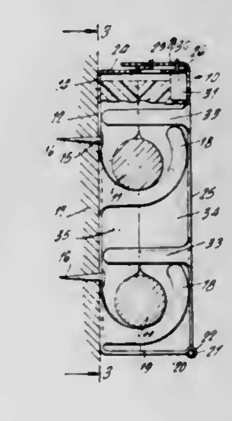

1. A fishing rod holder comprising a rod receiving member, a substantially flat elongated back plate on the rod receiving member, a plurality of spaced rod receiving hooks on said back

plate struck from said back plate and extending normally from the lateral margins of the back plate, a first block of resilient material on the back plate and disposed between the hooks, a latching member swingably secured to the rod receiving member, a substantially flat elongated front plate on the latching member, a plurality of spaced pins on said front plate and extending from the lateral margins of the front plate in the direction of the back plate, a second block of resilient material on the front plate and disposed between the pins in cooperative relationship with the first block to receive the fishing rods therebetween, latching means to yieldably hold the rod receiving and latching members together and a lock to secure the said latching member to the rod receiving member.

4,063,647
HOLDER FOR STORING BICYCLES AND THE LIKE
Donald W. Blackmore, 3702 La Colmena, Los Alamitos, Calif. 90720
Filed Aug. 16, 1976, Ser. No. 714,487
Int. Cl.² A47F *7/04*
U.S. Cl. 211—19 **1 Claim**

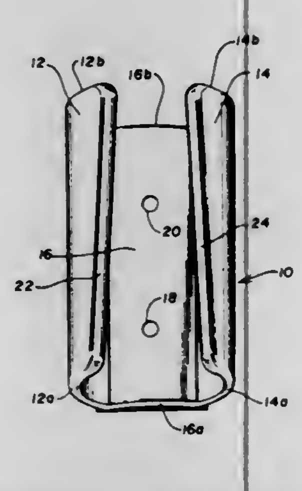

1. A holder for attachment to a mounting surface for use in storing bicycles and the like in a position with one wheel above the other, said holder comprising elongated opposed side walls having lower and upper edges, an elongated back wall connecting said side walls and projecting forwardly from the rearward edges of said side walls to form a pair of jaws defining an opening adapted to receive a portion of one of said wheels, each of said jaws having a top and a bottom and said jaws being tapered to converge at their tops; the lower edges of said side walls extending outwardly and upwardly from the lower edge of said back wall and the upper edges of said side walls extending outwardly and upwardly from the upper edge of said back wall; means on said back wall for securing said holder to said mounting surface, and means for adjusting the width of said opening by urging said back wall toward or away from said mounting surface; said mounting and adjusting means comprising an upper and a lower aperture in said back wall and screws of a dimension to be received in each of said apertures, so that tightening said screws electively will force said back wall toward said mounting surface thereby urging said jaws closer together and loosening said screws will permit said back wall to move outwardly from said mounting surface thereby urging said jaws farther apart.

4,063,648
DISPLAY SYSTEM FOR SAMPLES
Robert T. Fuller, 1351 Empire St., Anaheim, Calif. 92804, and Robert J. Sanders, 2200 Oshkosh Circle, Anaheim, Calif. 92806
Filed July 18, 1975, Ser. No. 597,381
Int. Cl.² A47F *7/16*
U.S. Cl. 211—45 **42 Claims**

1. A support board for removably supporting floor covering samples, comprising: a rigid board with a plurality of parallel columns of apertures through the board, at least some apertures in adjacent columns being disposed at equal elevations, there being a plurality of said elevations, whereby a plurality of samples can be attached to the support board, one above the other, said board having a top edge; a plurality of separable fasteners adapted to be passed in pairs through a floor covering sample and inserted in respective ones of the apertures, whereby to be engaged to the support board and hold a respective sample thereto; and a finishing strip engaged to the top

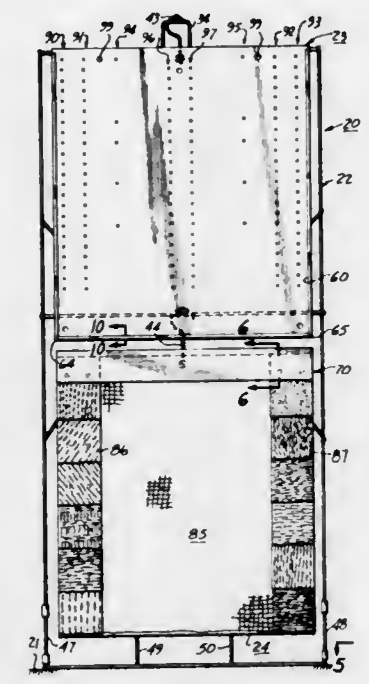

edge of the support board, said finishing strip comprising a rear wall, a first flange spaced from said rear wall to form a channel to receive and embrace the board at said top edge, a finishing flange spaced from the first flange and extending beyond it, whereby to overlay part of a sample on the board, said finishing flange being flexible to spring over and clamp upon said sample.

4,063,649
CALIBRATION OF CRANE LOAD INDICATING ARRANGEMENT
Robert William Hubbard, Southend-on-Sea, and Timothy John Archer Davis, Westcliff-on-Sea, both of England, assignors to Pye Limited, Cambridge, England
Filed Nov. 5, 1975, Ser. No. 629,147
Claims priority, application United Kingdom, Nov. 22, 1974, 50773/74
Int. Cl.² B66C *13/16, 23/90*
U.S. Cl. 212—39 R **9 Claims**

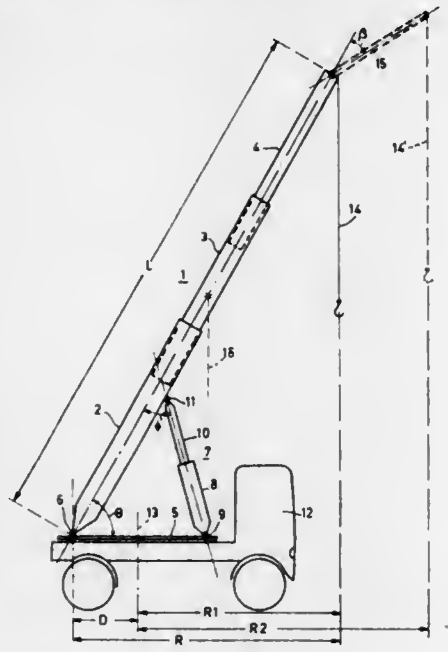

1. A method of calibrating a safe load indicating apparatus for use in a crane of the type having a pivoted telescopically extensible boom and a rating table for each mode of operation of the crane, said apparatus including; means for producing a

first signal representative of the turning moment of the boom about its pivot point, means responsive to said first signal for producing a working output signal representative of the actual loading on the crane, law generator means having for each mode of crane operation an input/output characteristic which defines a rating curve corresponding to the crane rating table for the appertaining mode of crane operation, said law generator means providing for each mode of operation a reference output signal representative of the maximum safe loading for the crane, and means responsive to said reference and working output signals for providing an indication of available crane lifting capacity, said method comprising the steps of:

1. setting up the crane for operation in a given mode,
2. setting the boom to a configuration specified in the rating table for that mode, but with no load suspended therefrom,
3. injecting into the apparatus so as to be additive to the first signal a calibration signal representative of the calculated turning moment which would be produced by a load equal to the maximum safe load for the specified boom configuration thereby to produce a calibration working output signal, and
4. adjusting the input/output characteristic of the law generator means for the appertaining mode until said reference output signal equates to said calibration working output signal and is thus representative of the maximum safe loading of the existing boom configuration.

4,063,650
EQUIPMENT HANDLING SYSTEM
Joseph F. Homer, Houston, Tex., assignor to Exxon Production Research Company, Houston, Tex.
Filed Feb. 2, 1976, Ser. No. 654,676
Int. Cl.² B65G *47/90*
U.S. Cl. 214—1 BB **13 Claims**

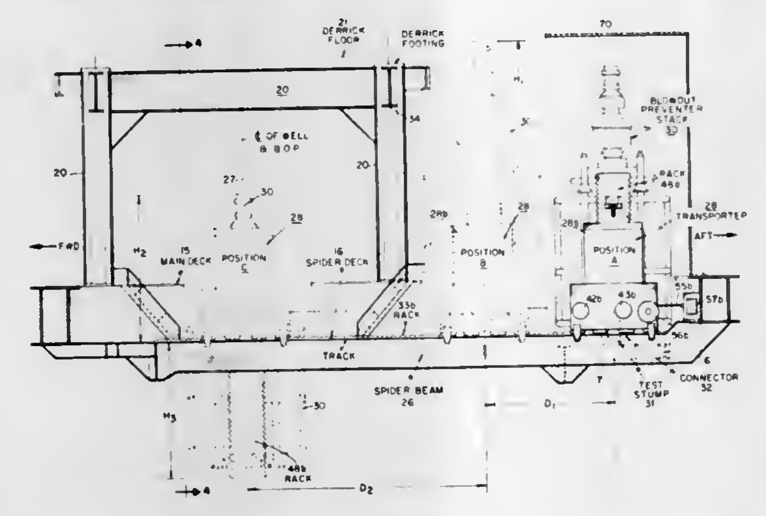

13. An equipment handling system for moving equipment on a floating drilling vessel, said vessel containing a drilling platform having a deck provided with an opening comprising:
two parallel extending tracks arranged on said deck on each side of said deck opening;
means on said deck for storage, maintenance and/or testing of said equipment, said two parallel tracks extending to said storage, maintenance and/or testing means;
a rack arranged on each of said tracks;
a frame having two sides and supported on said tracks;
a first gear means arranged on each frame side and engageable with said rack associated with such frame side;
a vertically extending rack arranged on each frame side;
second gear means arranged on each frame side engageable with said vertically extending rack associated with such frame side;
means on each of said frame sides for driving said first and second gear means to move said frame sides along said track and to move said vertically extending racks;
lifting means arranged on each of said frame sides engageable with said equipment to be transported by said frame sides; and
equipment retainer latch means arranged on said vertical racks and moveable therewith.

4,063,651
ARTICLE CONVEYING APPARATUS
Nobuo Chino, Komae, Japan, assignor to Taisei Kensetsu Kabushiki Kaisha, Tokyo, Japan
Filed Mar. 8, 1976, Ser. No. 664,897
Claims priority, application Japan, June 17, 1975, 50-81469[U]
Int. Cl.² B66C *19/00*
U.S. Cl. 214—1 BB **1 Claim**

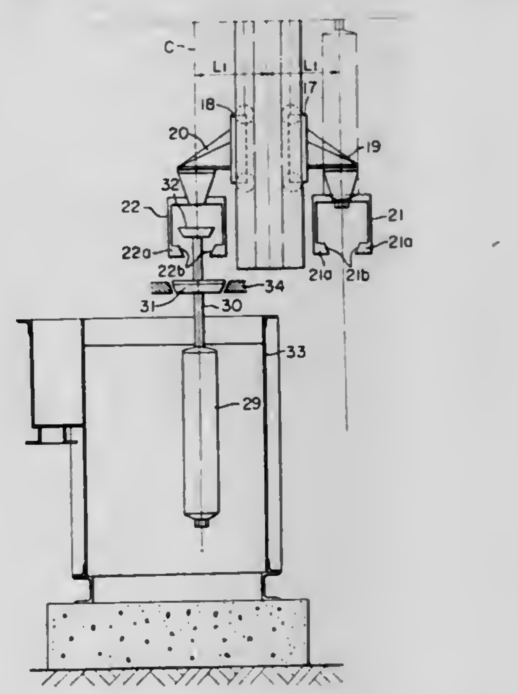

1. An automatic processing apparatus comprising: a track extending from an unprocessed article receiving position past a processing means to a processed article delivery position; a carrier device supported on said track for freely travelling on said track and having a body, an arm supporting frame freely rotatably mounted on said body for rotation around a vertical axis, a pair of arms fixed to said arm supporting frame and protruding radially in opposite directions from said arm supporting frame, and a pair of supports, one fixed to each arm, each of said supports being C-shaped and having two spaced opposed portions on the lower side thereof defining an opening therebetween, said opposed portions each having on the end thereof facing said opening a surface having an upwardly diverging frusto-conical shape with the two surfaces lying on a common cone the vertical axis of which coincides with the center of said support, said supports being fixed to said arms with the relative positions of said centers on the circumference of a horizontal circle around said vertical axis of said arm supporting frame, the locus of the center of one of said supports on one side of the locus of said vertical axis of said carrier device during the travel of said carrier device along said track being a carrier line between the unprocessed article receiving position and said processed article delivery position, and locus of the center of said support on the other side of the locus of said vertical axis of said carrier device during travel of said carrier device being a processing line which extends through the processing means; a supporting element at each of said unprocessed article receiving position, said processed article delivery position and said processing means and having two spaced opposed portions defining an opening therebetween, said opposed portions each having on the end thereof facing said opening a surface having an upwardly diverging frusto-conical shape with the two surfaces lying on a common cone the vertical axis of which lies on the locus through the respective positions and processing means; and a carrier jig provided for each article to be processed and having a supporting means constituted by a supporting rod having a size for freely passing through said openings in said supports and said supporting elements, a first engaging plate on said rod having an upwardly

diverging frusto-conical peripheral surface complementary in shape to the opposed end surfaces of the portions on the supports and firmly engagable with said opposed portions of said supports, and a second engaging plate on said rod below said first engaging plate and having an upwardly diverging frusto-conical peripheral surface complementary in shape to the opposed end surfaces of the portions on the supporting elements and firmly engagable with said opposed portions of said supporting elements, whereby when the processing of an article to be processed by said processing means ends, the carrier device is caused to travel along said track to said unprocessed article receiving position to pick up an unprocessed article fitted with a carrier jig by engaging the support moving along the carrier line with the first engaging plate on the jig, and then said carrier device is caused to travel along said track to the position of said processing means and the support moving along the processing line is caused to engage the first engaging plate on the jig on the processed article in said processing means, said arms are raised and said arm supporting frame is turned 180° to transfer the unprocessed article to the processing line and the processed article to the carrier line, the support carrying the unprocessed article is lowered to engage the second engaging plate on the jig on the unprocessed article with the supporting element at the processing means to permit processing of the unprocessed article, and then the carrier device is caused to travel along said track to carry the processed article to the processed article delivery position along the carrier line.

4,063,652

TIER PATTERN SEQUENCE ACTIVATION MEANS

Robert W. Lee, Fresno, Calif., assignor to Sperry Rand Corporation, New Holland, Pa.

Filed Aug. 19, 1976, Ser. No. 715,772

Int. Cl.² A01D *87/12;* **B65G** *57/32*

U.S. Cl. 214—6 B **16 Claims**

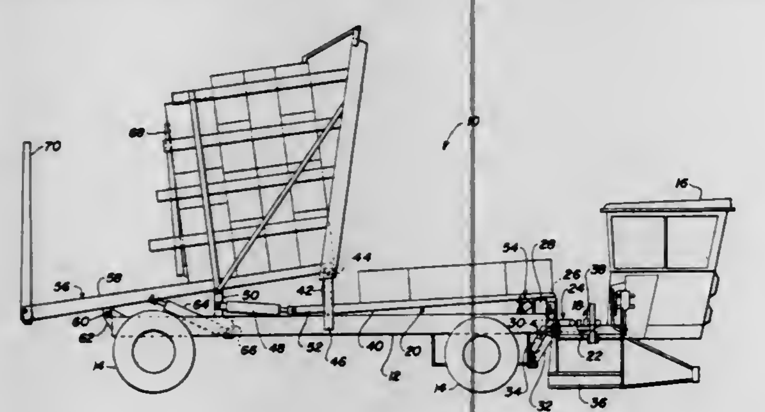

1. In a bale wagon having operable means for forming bales into a plurality of tier patterns and means for storing a predetermined sequence of said plurality of tier patterns, said storing means defining a plurality of successive-displaced positions which each represent one of said tier patterns, said operable means responsive to each of said storing means positions to form the bales into the one of said tier patterns corresponding to each of said storing means positions, the improvement which comprises:
- a source of electrical power;
- electrical drive means activatable for rendering said operable means successively responsive to each of said storing means positions; and
- electro-mechanical means including
- circuitry interconnecting said electrical power source and said drive means for transmitting electrical energy from the former to the latter to activate the latter;
- first means for opening said circuitry in response to said operable means being rendered responsive to said predetermined one of said storing means positions so as to prevent the transmission of electrical energy to said drive means; and
- second means for selectively closing said circuitry so as to allow the transmission of electrical energy to said drive means to activate the same until said first means opens said circuitry when said operable means is rendered responsive to said predetermined one of said storing means positions.

4,063,653

AUTOMATIC HIGH SHELF STORE

Karl Rudolf Halada, Rupperswill, Switzerland, assignor to Oehler, Wyhlen, Lagertechnic AG, Aarau, Switzerland

Filed Oct. 5, 1976, Ser. No. 729,707

Int. Cl.² B65G *1/04*

U.S. Cl. 214—16.4 A **3 Claims**

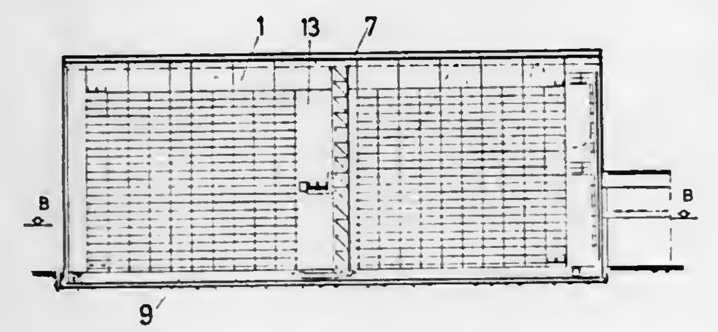

1. An automatic high shelf storage apparatus especially adapted for storing heavy metal rods, pipes and sections to be moved by sliding in containers along longitudinal slideways in and between blocks of storage racks comprising:
- individual compartments located with said blocks of storage racks having central parts which constitute a side by side pair of longitudinal slideways, an entrance and an exit for the slideway;
- a cassette serving as the container for the heavy metal rods, pipes and sections which is constituted of a steel lattice body with end cross bars and two longitudinal smooth bottomed runners for sliding movements, said runners having upwardly bent ends which extend beyond the edge of a block to facilitate pulling or pushing of the loaded cassette as a sled from the cross bars at the end;
- transfer mechanism to convey cassettes through the exit out one side of slideway of the pair and for loading a block with cassettes through another side of the slideway of the pair;
- slide pieces fixed horizontally in the slideways of the compartments and in the racks which receive the cassette and also receive said transfer mechanism;
- said slide pieces being impregnated with solid lubricant to provide a lubricated surface having controlled sliding properties so that static friction between a slide piece and the cassette is adequate to prevent unintentional shifting on the slideway during loading and unloading while facilitating pushing or pulling of the cassette;
- a storage machine including a draw out device, lifting mechanism lifting table conveyor on tracks and entrainment means, said entrainment means adapted to extract a cassette from the rack for pushing the cassette into a slideway by hooking an end cross bar of the cassette from a direction below the cross bar under limited rotational movement of the lifting table and by being pushed by conveyor movement on the racks into the slideway;
- pawls for effecting said hooking of the cassette by an end cross bar of the cassette said hooking being facilitated by the projection of the end of the cassette beyond the edge of the block whereby limited pivotal upward movement of the lifting table entrains the cross bar and permits vertical movement of the lifting table by the lifting mechanism;
- a transverse thrust means for pushing the cassette sideways; and
- endless chain means adapted to handle two cassettes on side by side relation, said chain means being attached to said entrainment means.

4,063,654

SWEEP AUGER APPARATUS

Charles C. Shivvers, Corydon, Iowa 50060

Filed Aug. 11, 1975, Ser. No. 603,344

Int. Cl.² B65G *65/30*

U.S. Cl. 214—17 DA **5 Claims**

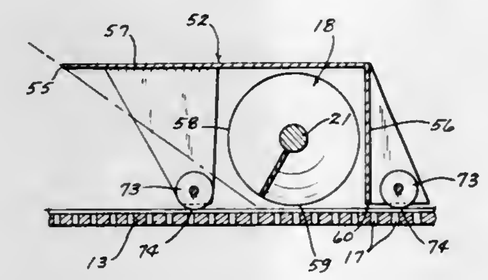

1. Apparatus for moving a horizontal layer of uniform thickness of a free flowing granular material along the bottom wall of a circular storage bin toward the center of the bin comprising:
- a. A sweep auger extended radially of the bin having a forward leading side, a rear trailing side, a lower side, and a top side,
- b. means for rotating said sweep auger horizontally through said material and on said bottom wall about a vertical axis located centrally of the bin, and
- c. a housing structure for said sweep auger located below the level of the material in said bin and movable horizontally with the auger through the material, said housing structure having an upright rear wall adjacent the rear side of the sweep auger and a continuous top wall adjacent the top side of said sweep auger connected to and projected forwardly from the upper edge of said rear wall,
- d. said rear wall having a lower edge in a working clearance with the bottom wall of said bin, and said top wall having a material supporting upper surface and a front edge positioned forwardly of the leading side of the sweep auger a distance such that the apex of the angle of repose of the material vertically below said top wall is located forwardly of the lower side of the sweep auger when said front edge is in the plane of the upper surface of the material forming the angle of repose, whereby during each revolution of horizontal rotation of the sweep auger there is moved toward the center of the bin a horizontal layer of the granular material of a thickness substantially equal to the vertical distance between said front edge of the top wall and the lower side of said auger.

4,063,655

UNLOADING APPARATUS HAVING RETRACTABLE CAM WHEEL FOLLOWERS

Gerald G. Lambert, Brookfield, Wis., assignor to Rexnord Inc., Milwaukee, Wis.

Filed June 24, 1976, Ser. No. 699,567

Int. Cl.² B65G *67/24*

U.S. Cl. 214—62 A **3 Claims**

1. An improved apparatus for carrying and unloading articles including a carriage adapted for movement between loading and unloading stations, a container pivotably connected to said carriage and adapted for carrying objects between stations, and cam follower means associated with said container for contacting a cam surface and pivoting said container to a predetermind angle when actuated,
- said improvement comprising a cam follower shaft member mounting said cam follower means and movably attached to said carriage for telescopic movement between a retracted position and an extended position, said cam following means being housed within said apparatus when in the retracted position,
- biasing means for yieldably biasing said cam follower shaft toward said retracted position, and
- locking means operative when said member is extended for restraining said shaft in the extended position,
- said cam shaft member having an arm means extending from a point adjacent said cam follower means when said member is in the extended position for contacting a stationary object to inactivate said locking means and permitting said biasing means to retract said member into its retracted position.

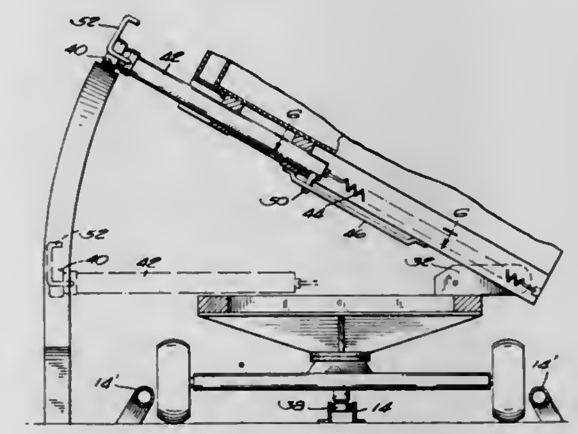

4,063,656

SYSTEM AND APPARATUS FOR MOVING AND UNLOADING ARTICLES

Gerald G. Lambert, Brookfield, Wis., assignor to Rexnord Inc., Milwaukee, Wis.

Filed June 24, 1976, Ser. No. 699,568

Int. Cl.² B65G *67/24*

U.S. Cl. 214—62 A **7 Claims**

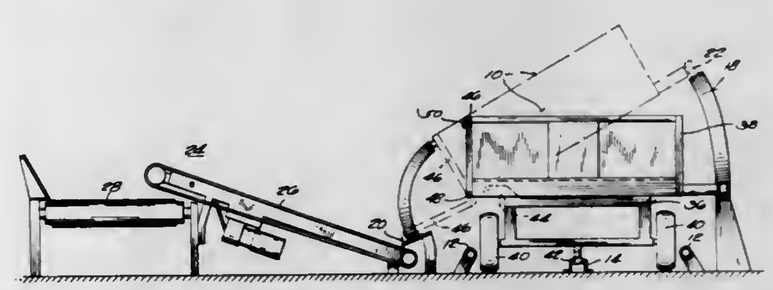

1. A system for the handling of articles including an apparatus for moving and unloading articles, a guide means for constraining movement of the apparatus along a predetermined path, and an unloading station adjacent the path and adapted to receive articles unloaded from the apparatus comprising:
- a. said apparatus having
  1. at least one moveable carriage,
  2. a container adapted to carry a plurality of the articles and pivotably mounted to said carriage along an axis lying substantially in the direction of movement of said carriage,
  3. a plurality of doors even pivotably mounted along its bottom edge to said container about an axis substantially parallel to the pivot axis of said container,
  4. door securing means associated with each of said doors for releasably securing said door to said container,
- b. door release means for causing the door securing means to unlatch said doors from said container at a predetermined point along the path;
- c. door impeding means for impeding the rapid opening of the doors and for sequentially allowing each door to fully open after being unlatched when each of said doors reaches a first predetermined position adjacent the unloading station; and
- d. door closing means for sequentially closing each door as each of said doors moves past a second predetermined position.

4,063,657
VIBRATOR BRACKET ASSEMBLY FOR HOPPERS AND RAILWAY CARS
Paul E. Hicks, Jr., Florissant, Mo., assignor to ACF Industries, Incorporated, New York, N.Y.
Division of Ser. No. 554,931, March 3, 1975, Pat. No. 4,039,128. This application May 28, 1976, Ser. No. 691,170
Int. Cl.² B60P *1/58*
U.S. Cl. 214—152 **10 Claims**

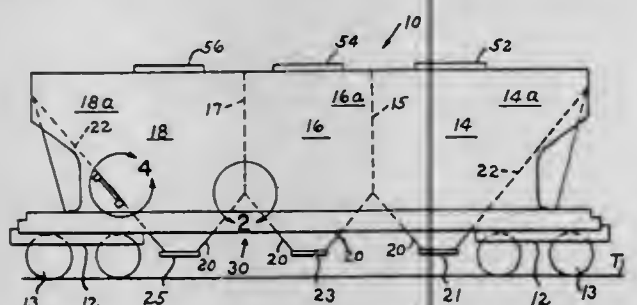

1. A method of loading a railway hopper car comprising: attaching a vibrator bracket assembly to the car, said assembly comprising: at least two spaced support members adapted to extend parallel to and integrally engage a structural portion of a hopper having a hopper planar surface, said spaced support members each having a longitudinal axis, a vibrator mounting bracket extending between said support members and having first and second planar surfaces, said planar surfaces being parallel to the longitudinal axis of said spaced support members; attaching a vibrator to said first and second planar surfaces; loading the lading into the car and operating said vibrator to apply vibrational forces to the hopper through the assembly whereby vibrational forces applied to the vibrator mounting bracket are transmitted through said spaced support members and are applied to said car essentially entirely as shear loads.

4,063,658
SLAG POT CARRIER
Edward S. Kress, 4009 Brookdale Place, Peoria, Ill. 61614; Jackson C. Medley, P.O. Box 322, Brimfield, Ill. 61517, and Merrill E. Pinter, 315 Dwight St., Kewanee, Ill. 61443
Filed Aug. 9, 1976, Ser. No. 712,485
Int. Cl.² B65G *65/04*
U.S. Cl. 214—314 **4 Claims**

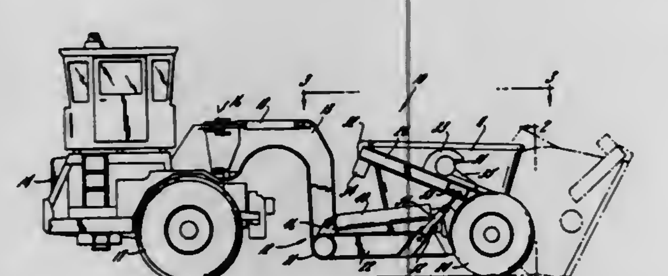

1. A carrier for a pot having a pair of opposite side trunnions and an end projection comprising, in combination, a wheeled open-ended frame sized to surround three sides of said pot while the latter rests on the ground, a three-sided cradle pivoted at its open ends on the open ends of said frame, said cradle having a first position resting on and in horizontal contact with said frame wherein said frame can be maneuvered about said pot with the cradle embracing the pot and underlying said trunnions, a pair of lifting levers pivoted on said frame adjacent said cradle pivots, a pair of links one being pivoted between each lever and near each open end of said cradle, the pivot points of said links being located so that angular movement of said levers produces angular movement of greater magnitude of said cradle, and a pair of linear actuators mounted on said frame and connected to said levers for swinging said levers and thus tilting said cradle about its pivots from said first position through a second position, wherein the pot is raised from the ground but held substantially level, to a third position wherein the pot is tipped by abutting an abutment on the cradle and is at least partially inverted to a dumping position and in all three positions the cradle surrounds the pot and whereby the first, second and third positions lie consecutively along the arc produced by the swinging cradle.

4,063,659
CAR TOP BOAT CARRIER
Gerald J. Welch, 5 Brentwood Road, New Milford, Conn. 06776
Filed Dec. 2, 1976, Ser. No. 746,693
Int. Cl.² B60R *9/00*
U.S. Cl. 214—450 **8 Claims**

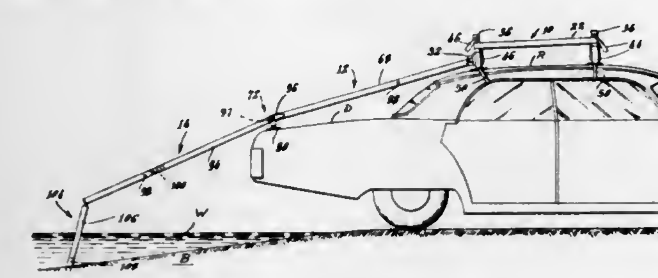

1. A car top boat carrier which comprises: a boat supporting cradle mountable on a car top; first and second elongated rail members having respective first and second ends; means for detachably securing the first ends of said first and second rail members to said cradle in spaced apart relationship;, each of said first and second rail members being rotatable about its longitudinal axis means for supporting the second ends of said first and second rail members, said first and second rail members being substantially parallel and defining a first ramp section; third and fourth elongated rail members having respective first and second ends, the first ends being hingedly secured to the respective second ends of said first and second rail members; and means for individually supporting the second ends of said third and fourth rail members on the bottom of a body of water to compensate for variations in the depth of said bottom and form a second ramp section aligned with the first ramp section.

4,063,660
ELECTRICAL OUTLET BOX
Gordon K. Ware, St. Charles, Ill., assignor to Ware Fuse Corporation, Chicago, Ill.
Filed Apr. 6, 1977, Ser. No. 785,011
Int. Cl.² H02G *3/08*
U.S. Cl. 220—3.6 **5 Claims**

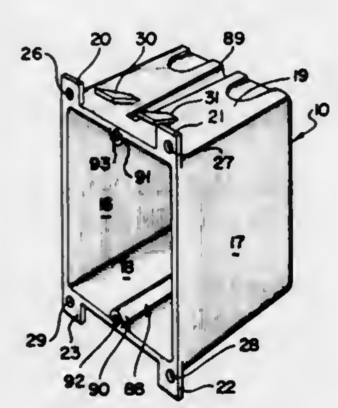

1. A molded plastic hollow electrical connection box structure adapted to support itself in a small panel opening, the box comprising a back wall, a plurality of opposed sidewalls and a plurality of opposed endwalls, solid at their top, the sidewalls and endwalls extending forwardly from the back wall to collectively define, with said back wall, an open hollow box, and box-panel mounting means formed integrally with the endwalls, the mounting means including a stop ear formed at each sidewall corner and extending perpendicularly to the endwall and parallel to the adjacent sidewall and to an opposite stop ear formed at the opposite endwall corner, the mounting means further including a pair of trapezoidal, flexible cam segments extending diagonally outwardly from each endwall, each flexible cam segment being spaced mediately of the adjacent ears, each flexible cam segment end being defined by a small segment-endwall interconnecting base and a large free end and outwardly and upwardly disposed sides extending from the small base to the large free support end, the end, base and sides thereby defining the trapezoidal appearance of each cam segment, each cam segment side being free of any support from the associated endwall save at the cam segment base, the free end being spaced apart from the underlying wall to permit the cam segment to flex as the box is urged into the wall panel opening, each cam segment being originally arranged in a relatively unbent, planar, pre-assembly configuration, the small base and large free end acting together to cause cam segment flexure predominately in a cam segment flexure region adjacent the base, whereby to rotate the cam segment free end into a panel-passing position adjacent the endwall and causing a partial permanent set in the cam segment flexure region, the cam, when urged completely past the panel, springing back only part way toward its original pre-assembly position, the pastpanel cam position permanently locating that portion of the cam between the cam free end and the flexure region in a position relatively parallel to the box end wall so as to accommodate without damage forces tending to pull the box out of the wall panel, and rotating the cam segment free end into a past-panel position closer to the ears than the original cam segment free end position so as to compressively squeeze the panel between the ear and the cam segments and permanently compressively load the cam segments, one cam segment of each pair on each endwall having its base located closer to the box top and cooperating ears than the base of the other cam segment so as to provide staggered, reduced-force flexing action to the cam segments, box endwalls and wall panel as the box is urged into position on the panel.

4,063,661
ELECTRIC LOAD RESEARCH DEVICE INCLUDING AN ENCLOSURE HAVING ADJUSTABLE METER POSITIONS
William P. Doby, Raleigh, N.C., assignor to Westinghouse Electric Corporation, Pittsburgh, Pa.
Continuation of Ser. No. 550,700, Feb. 18, 1975, abandoned. This application Apr. 27, 1976, Ser. No. 680,659
Int. Cl.² H02B *9/00;* B65D *41/06, 41/36*
U.S. Cl. 220—293 **4 Claims**

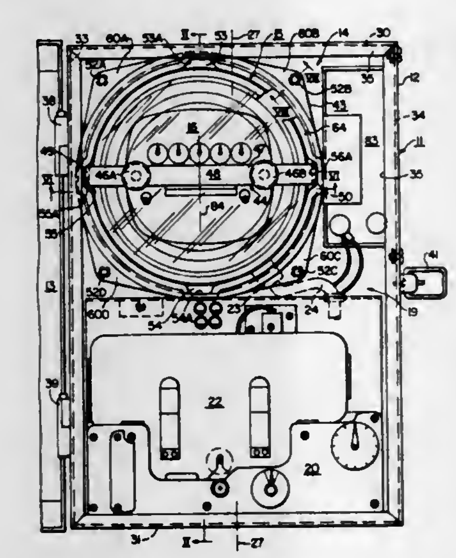

1. An electric load research device for installation at an electric billing meter socket in different orientations, said device comprising:

an enclosure formed by a box member including a wall defining an opening for receiving a forward projecting cup-shaped cover of a metering unit mountable in the meter socket;

a mounting means carried on the inner side of said wall around said opening, said mounting means including a support surface for supporting engagement with the metering unit cover when said box member is oriented in different rotated positions about the cover;

a bracket assembly including front and rear portions, said front portion being attachable to said cover when the cover is engaged by said support surface,

locking means carried by said box member and receiving different rotated positions of said rear portion of said bracket assembly for preventing relative rotation between said box member and said cover;

and releasable fastening means for clamping said bracket assembly to said cover and said locking means so that said enclosure is fixedly carried by said cover of said metering unit in one of preselected rotated orientations.

4,063,662
CALIBRATING MEANS FOR A MICRODISPENSER
Michael E. Drummond, West Chester, Pa., and John E. Robinson, Springfield, Va., assignors to Drummond Scientific Company, Broomall, Pa.
Filed July 8, 1976, Ser. No. 703,533
Int. Cl.² B67D *5/22*
U.S. Cl. 222—31 **10 Claims**

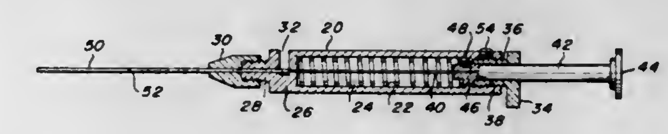

1. A microdispenser having calibrating means, comprising:

a. a cylindrical barrel having an axial bore,
b. a removable end cap having a portion frictionally engaged with one end of said barrel,
c. a plunger assembly movable longitudinally through said cylindrical barrel and end cap,
d. means for urging said plunger assembly in the direction of said end cap,
e. stop means on said plunger assembly engageable with said end cap for limiting the longitudinal movement of said plunger assembly through said end cap,
f. tube means,
g. means for positioning said tube means in the end of said cylindrical barrel opposite the end cap, to receive said plunger assembly,
h. indicia means on said tube means for indicating the amount of fluid to be drawn into said tube means,
i. said removable end cap being longitudinally relocated with respect to said cylindrical barrel, for effecting corresponding longitudinal movement of said plunger assembly in said tube means, to align one end of said plunger assembly with the indicia means on said tube means, whereby a predetermined, precise volume of fluid is delivered upon actuation of the plunger assembly, and
j. locking means engageable with said end cap for maintaining the latter in fixed position with respect to said cylindrical barrel.

4,063,663
POWDERED DETERGENT DISPENSER
Spencer Brian Larson, South St. Paul, and Duane Leroy Salmonson, West St. Paul, both of Minn., assignors to Economics Laboratory, Inc., St. Paul, Minn.
Filed Dec. 15, 1975, Ser. No. 640,638
Int. Cl.² B67D *5/08*
U.S. Cl. 222—52 **15 Claims**

1. Improved powder detergent dispenser apparatus for attachment to or closely adjacent a washing machine, wherein the washing machine is of the type having a reservoir for

maintaining a supply of concentrated detergent solution, comprising:

a. a container for powdered detergent, comprising:
   i. an upper storage portion for retainably holding a mass of powdered detergent, defining an upwardly disposed mouth for accepting the detergent therethrough into said storage portion;
   ii. a door member pivotally hinged to said container and disposed across said upwardly disposed mouth, said door member being movable with respect to said upwardly disposed mouth to open and close detergent loading access to said storage portion therethrough;
   iii. a funnel shaped collector portion integral with and extending continuously downward from said storage portion and terminating at a lower outlet port from the container; and
   iv. a support member extending from the inner wall of the container at the juncture of said storage and said collector portions thereof, having an annular flange extending inwardly toward the center of the container;
b. means for mounting said container to a vertical wall proximate to a washing machine;
c. a symmetrically curved continuous screen member mounted within said container on said support flange, said screen member being concave when viewed from the underlying collector portion and having a screen mesh

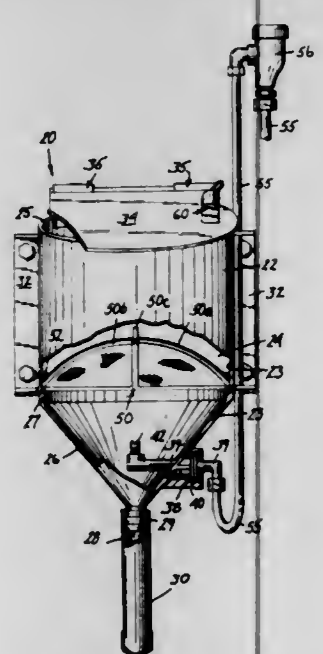

sized to retainably carry a powdered detergent thereabove;
d. spray-forming nozzle means mounted in the collector portion of said container below said curved screen member for directing a uniform spray at substantially the entire downwardly facing surface of said screen member such that said spray impinges generally perpendicularly upon said screen member across its entire surface;
e. a conduit connecting said outlet port with the washing machine for directing by gravity flow concentrated detergent solution from the collector portion of said container into a reservoir of the washing machine;
f. a water supply line connecting said spray nozzle with a pressurized source of water;
g. spray control means cooperatively connected to said water supply line for selectively controlling flow of water through said supply line to said nozzle means and being operative in response to receipt of a control signal to open said water supply line to water flow therethrough, causing said nozzle means to direct a spray of water against the lower surface of said screen member, dissolving that detergent carried immediately thereabove which passes in solution through the screen member to the underlying collector portion of said container, and is immediately directed by said collector portion through said outlet port thereof to said conduit; and
h. safety control switching means responsive to movement of said door member to immediately blocking water spray from said nozzle means whenever said door member is moved from a closed position overlying the mouth of said container to prevent spray of caustic solution through said container mouth.

4,063,664

DEVICE FOR INDICATING WHEN AUTOMATIC, PERIODIC OPERATION HAS EMPTIED AN AEROSOL CONTAINER

Murray O'Neil Meetze, Jr., Columbia, S.C., assignor to The Risdon Manufacturing Company, Naugatuck, Conn.

Filed Sept. 13, 1976, Ser. No. 722,690

Int. Cl.² B67D *5/28*

U.S. Cl. 222—70 **14 Claims**

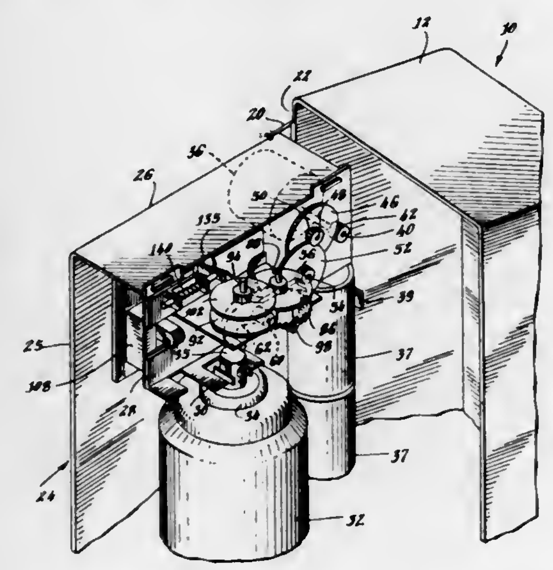

1. In an apparatus for automatically and periodically operating an aerosol container in discreet dispense cycles to discharge a metered quantity of the contents thereof, the apparatus including a motor operatively linked to the container and a power supply for powering the motor; a device for stopping automatic, periodic operation of the container when it has been emptied, said device comprising:

A. a timing circuit interconnecting the power supply and the motor and including:
   1. first time measuring means for producing motor actuating output pulses at a first periodic rate, each actuating output pulse being of duration sufficient to cause the motor to operate the container, and
   2. second time measuring means for producing non-actuating output pulses at a second periodic rate substantially greater than the first rate, each non-actuating pulse being of duration insufficient to cause the motor to operate the container,
B. switch means for selectively operating the motor through said first and second time measuring means; and
C. sensing means for determining when the container has been emptied and then for actuating said switch means to operate the motor through said second time measuring means.

4,063,665

SUPPLY CONTAINER AND DISPENSING UNIT ASSEMBLY

Barry Schneider, Crystal Lake, Ill., and Steven Bernard, Palos Verdes Peninsula, Calif., assignors to Chemtrust Industries Corporation, Franklin Park, Ill.

Filed Dec. 6, 1976, Ser. No. 748,055

Int. Cl.² B65D *1/04*

U.S. Cl. 222—129 **13 Claims**

1. In combination with a supply container holding a supply of a volatile liquid material to be poured therefrom into a dispensing unit from which the material progressively disperses in a gaseous form to the surrounding atmosphere, said container having vertical side walls forming the main body portion of the container, a permanently sealed closure wall at the bottom of said main body portion and an upper end portion at the top of said body portion and including a section which is to form a pouring opening and which includes a closure cap for sealing and re-sealing the pouring opening after a portion of the contents of the container is poured therefrom; an attachment unit removably secured to one of the ends of the sealed container so as to form what appears to be a vertical extension thereof, said attachment unit forming a compartment contain-

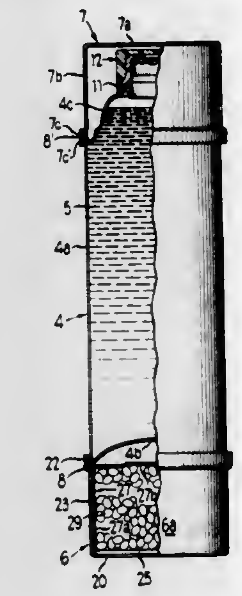

ing a liquid-absorbent material and into which is to be poured said liquid material, the attachment unit having a base portion adapted to rest on a horizontal surface when removed from said container and aperture-forming means forming one or more apertures into which said liquid is poured from said pouring opening of said container and from which the gaseous form of said liquid material passes into the surrounding atmosphere when the base portion of said attachment unit is resting on said horizontal surface.

4,063,666

VOLUME METERING DEVICE HAVING A FLOAT OPERATED VALVE

Neil Hugh Downing, Courtland Manor Rd., Katonah, N.Y.; Edward Morris Brown, Livingston, and Edward Johnson Towns, Convent Station, both of N.J., assignors to Neil Hugh Downing, Katonah, N.Y. 10536

Filed June 25, 1976, Ser. No. 699,689

Int. Cl.² G01F *11/26*

U.S. Cl. 222—455 **13 Claims**

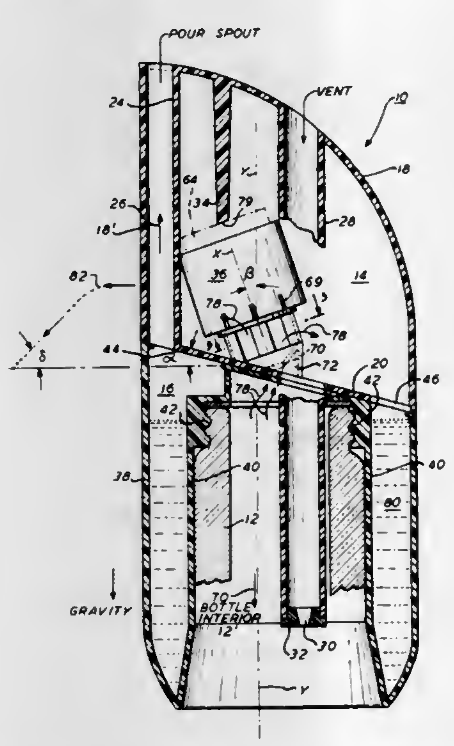

6. A liquid metering device for providing a measured volume of liquid comprising

means for receiving liquid,
a first liquid storage chamber in fluid communication with said receiving means and arranged to receive liquid from said receiving means when disposed in a first inverted orientation, said first chamber having a volume greater than said measured volume,
float valve means associated with said first chamber for providing a predetermined volume of liquid in said first chamber at least as great as said measured volume but less than said first chamber volume,
a second liquid storage chamber in fluid communication with said first chamber and disposed with respect to said first chamber so that liquid flows from said chamber to said second chamber when said chambers are in a second upright orientation,
liquid volume control means coupled to said second chamber for providing said measured volume in said second chamber when said chambers are disposed in said first inverted orientation, and
dispensing means coupled to said second chamber for removing the liquid in said second chamber when said chambers are in said first orientation.

4,063,667

NON-METALLIC SAFETY FILLING CONTAINER

Frank S. Flider, Mattoon, Ill., assignor to Justrite Manufacturing Co., Des Plaines, Ill.

Filed Dec. 30, 1975, Ser. No. 645,431

Int. Cl.² B65D *47/00*

U.S. Cl. 222—470 **10 Claims**

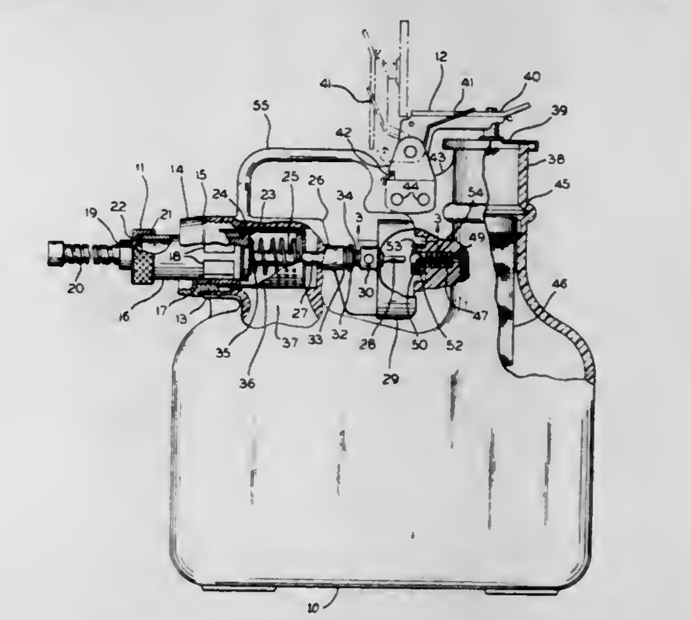

1. A plastic safety container having a wall with a continuously closed inner surface, comprising:
separate openings formed in said wall for filling, venting, and pouring from said container,
the first of said openings, used for filling said container, located on the top of said container and comprising a cylindrical upstanding tube extending into said container;
the second of said openings, used for emptying said container, being located on the side of said container and comprising a substantially horizontal tube extending from an open end into said container; and
the third of said openings, used for venting said container, forming a communicating passageway between the exterior and interior wall surfaces of said container;
means for sealing said second of said openings,
said sealing means slidably engaged within said second of said openings to selectively seal and unseal said second of said openings;
means for controlling the sliding of said sealing means,
said control means mounted to the exterior of said container; and
a single shaft having two ends,
the first of said ends attached to said seal means,

the second of said ends attached to said control means; and means for venting said third of said openings,
said venting means positioned within the third of said openings,
said sealing means, said shaft said control means and said venting means being aligned in fixed spatial relationship whereby operating said control means draws said sealing means inwardly from said second of said openings to complete a pour path from the interior of said container while simultaneously operating said venting means to complete a venting passage from the interior of said container to the exterior.

4,063,668
LADLE GATE VALVE
Earl P. Shapland, Champaign, Ill., and James T. Shapland, Pittsburgh, Pa., assignors to United States Steel Corporation, Pittsburgh, Pa.
Continuation of Ser. No. 150,585, June 7, 1971, abandoned, and Ser. No. 377,385, July 9, 1973, abandoned. This application Sept. 2, 1975, Ser. No. 609,344
Int. Cl.² B22D *37/00, 41/10*
U.S. Cl. 222—512 **39 Claims**

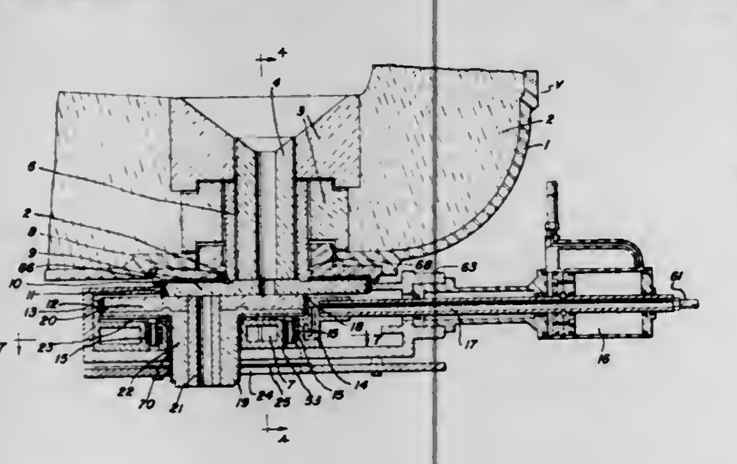

1. A valve for use on a vessel for discharging a fluid comprising, in combination,
means defining a working nozzle having an opening at an outer portion of said vessel,
means in fixed relation to the vessel defining a refractory surface surrounding said working nozzle opening,
a frame secured to the vessel for supporting a sliding member,
a sliding member comprising a refractory surface portion, a carrier, and a teeming opening at an inner portion thereof,
said frame having guide means cooperating with said carrier to maintain said refractory surfaces in opposed sliding relationship,
a plurality of yieldable means surrounding the working nozzle opening exerting a yieldable effort opposed by said frame and directed against the sliding member refractory,
said yieldable means being disposed intermediate the edges of the refractory and teeming opening and in opposed relationship with at least one such yieldable means substantially in front and one such yieldable means substantially behind the teeming opening along the path of movement, to thereby deflect the refractory surface of the sliding member to conform to the shape of the refractory surface surrounding the working nozzle opening.

4,063,669
DISPLAY BELT HANGER
George Smilow, Yonkers, and Samuel L. Kayen, Elmont, both of N.Y., assignors to Berger & Gorin, Inc., New York, N.Y.
Filed Sept. 10, 1975, Ser. No. 612,185
Int. Cl.² A47J *51/097*
U.S. Cl. 223—87 **2 Claims**

1. In a combination display belt hanger of resilient flexible material, including a main body having means for engaging a fixed support, and a loop-forming element depending from said main body element; and a buckle element of an individual dress belt selectively engaged with said loop-forming element, the improvement comprising: said buckle element including a generally planar main body portion having inner and outer surfaces, and an elongated stud having a free end extending laterally from said inner surface; said loop-forming element including a keyhole-shaped opening therein having a first

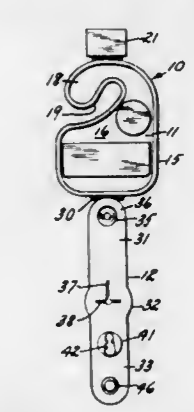

portion of configuration corresponding to the diameter of said stud, and a second larger portion communicating therewith; said stud being engaged with said keyhole-shaped opening from an outer surface of said loop-forming member, whereby said free end is at least partially enclosed between the inner surfaces of communicating parts of said loop-forming element, and thereby shielded from accidental contact with other objects.

4,063,670
CLOTHES HANGER
Jens Faarbech, 405 Fifth St. Apt. 5, Solvang, Calif. 93463
Filed Feb. 7, 1977, Ser. No. 766,607
Int. Cl.² A47J *51/095*
U.S. Cl. 223—92 **3 Claims**

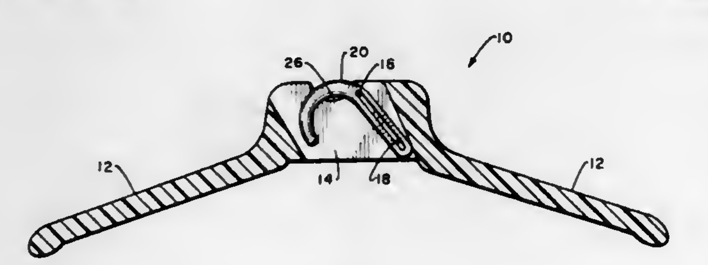

1. A clothes hanger comprising:
an elongated housing, said elongated housing terminating in a first end and a second end;
an enlarged opening formed within said housing intermediate said ends;
a metal pin extending across said opening and fixedly secured to said housing;
a hook member having an elongated closed slot, said hook member adapted to be supported upon a supporting rod, said pin cooperating within said elongated slot, said hook member being movable between a retracted position totally enclosed within said enlarged opening to an extended position to facilitate placement of said hook member upon a supporting rod; and
said housing including recess means within said housing communicating with said enlarged opening, with said hook member located in the retracted position within said enlarged opening, said hook member being slightly exposed by said recess means to facilitate manual grasping of said hook member, the upper edge of said housing located on each side of said recess means being planar to facilitate the supporting of garments.

4,063,671
FILM ADVANCING MECHANISM
Miklos Von Kemenczky, Greenbrook, N.J., assignor to Paul Guilden, New York, N.Y.
Filed Jan. 7, 1977, Ser. No. 757,603
Int. Cl.² G03B *1/24*
U.S. Cl. 226—76 **16 Claims**

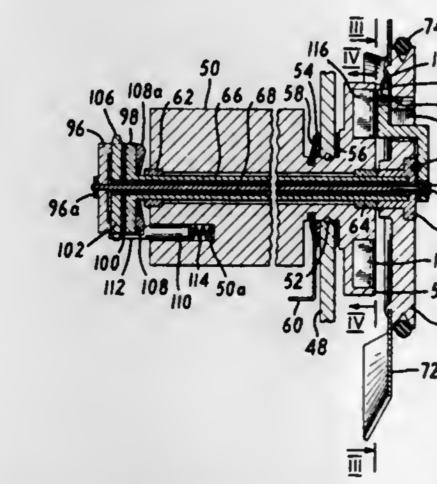

1. In combination, in a film projector:
a. drive means continuously operative during projector use;
b. first and second members each rotated by said drive means about a common axis at common rotational speed, said first and second members being axially spaced from one another, said first member being supported for axial translation toward said second member;
c. film advancing sprocket means supported axially between said first and second members and rotated thereby upon said axial translation of said first member;
d. first means for generating a magnetic field continuously during projector use; and
e. second means influenced by said magnetic field for imparting said axial translation to said first member, said first and second means being relatively movable to provide selective disposition of said second means in said magnetic field.

4,063,672
CHARGE FEEDING ARRANGEMENT FOR AN EXPLOSIVE CHARGE DRIVEN SETTING GUN
Peter Jochum, Meiningen, Austria, assignor to Hilti Aktiengesellschaft, Schaan, Liechtenstein
Filed Mar. 29, 1976, Ser. No. 671,153
Claims priority, application Germany, Apr. 1, 1975, 2514256
Int. Cl.² B25C *1/14*
U.S. Cl. 227—10 **19 Claims**

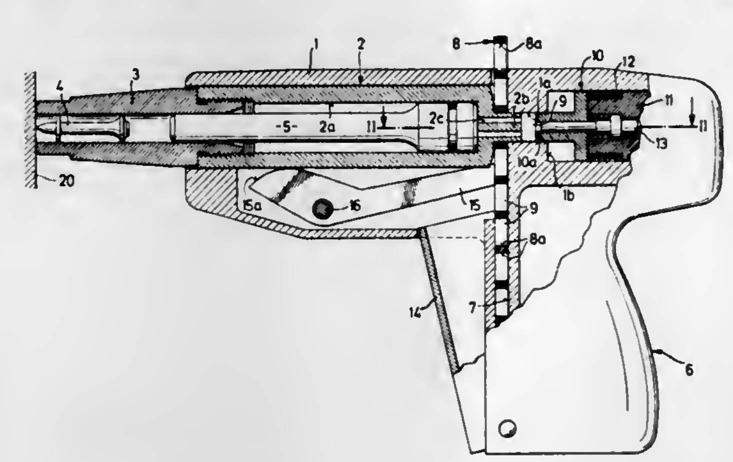

1. Explosive charge driven setting gun for driving fastening elements, such as bolts, nails and the like, into a hard receiving material, such as concrete, steel and the like, comprising a gun housing, an axially elongated barrel mounted within said housing and having a front end and a rear end, a charge holding member located within said housing and positioned adjacent the rear end of said barrel, said holding member having at least one recess therein for holding a caseless charge, a firing chamber within said housing adjacent both said holding member and the rear end of said barrel, a feed member located within said gun housing for displacing individual ones of the caseless charges from said holding member into the firing chamber wherein the improvement comprises a plunger located within said gun housing on the opposite side of said firing chamber from said feed member and said plunger having a cross sectional shape transverse to the axial direction of said barrel which corresponds substantially to the cross sectional shape of said firing chamber extending transversely of the axial direction of said barrel and said plunger being displaceable through said firing chamber and said feed member and said plunger being arranged coaxially of one another.

4,063,673
ULTRASONIC BONDING HEAD
Stanley Gaicki, Tempe, Ariz., assignor to Motorola, Inc., Schaumburg, Ill.
Continuation of Ser. No. 484,503, July 1, 1974, abandoned. This application Aug. 11, 1976, Ser. No. 713,461
Int. Cl.² B23K *21/02*
U.S. Cl. 228—1 R **5 Claims**

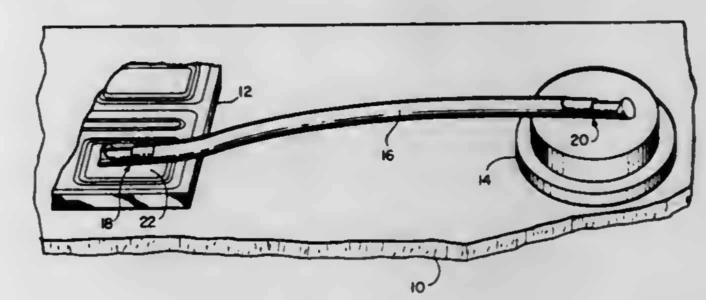

1. A stepped bonding head for receiving a wire having a diameter substantially in the range of 8–25 mils for simultaneously providing holding and bonding forces during a bonding operation comprising:
a. first and second recessed bonding surfaces being located at different planes from each other and separated from each other a predetermined vertical distance by a third surface, and
b. said third surface being disposed at an angle for transversely intersecting the longitudinal axis of said wire during the bonding operation and said predetermined vertical distance being of a dimension less than that capable of shearing said wire.

4,063,674
METHOD OF MAKING A WOUND MUSICAL INSTRUMENT STRING
W. Norman Stone, New Brunswick, N.J., and Alfred S. Falcone, East Hartford, Conn., assignors to National Musical String Company, New Brunswick, N.J.
Filed June 25, 1976, Ser. No. 699,708
Int. Cl.² G10D *3/10*
U.S. Cl. 228—173 E **9 Claims**

1. The method for improving a wound musical instrument string of the type comprising a core wire and a cover wire helically wrapped around said core wire, said method comprising the step of heating said string to an elevated temperature for a substantial amount of time, said elevated temperature being of such degree and said amount of time being of such duration as to relieve residual stresses in said cover wire caused by the wrapping of said cover wire onto said core wire.

4,063,675
METHOD OF FABRICATING A CROWN PLATE FOR FRANCIS-TYPE HYDRAULIC TURBINE RUNNER
Robert G. Grubb, York, Pa., assignor to Allis-Chalmers Corporation, Milwaukee, Wis.
Division of Ser. No. 605,755, Aug. 18, 1975, Pat. No. 4,012,170. This application Dec. 13, 1976, Ser. No. 750,256
Int. Cl.² B23K *31/02*
U.S. Cl. 228—178 **1 Claim**

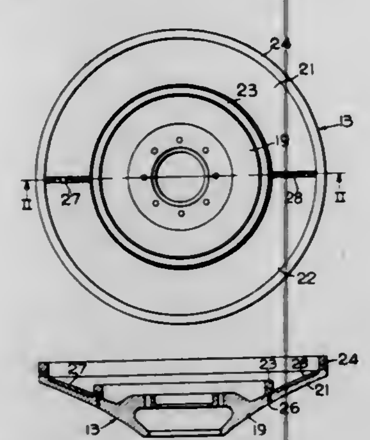

1. The method of fabricating a crown for a turbine and pump runner wherein the crown is composed of an inner circular section and at least a pair of arcuate outer sections and wherein a seal ring is connected to the crown, said method comprising the steps of: (1) welding the runner seal ring to the outer crown sections about the inner circular edge thereof so that a portion of the seal ring extends inwardly beyond said edge; (2) placing said inner circular crown section within the circle defined by said outer crown sections in abutting relation to the portion of said seal ring extending beyond said edge; (3) welding said inner and outer crown sections from the side of said crown remote from said seal ring whereby said seal ring is utilized as a welding backup bar; and (4) welding the ends of said outer sections to one another.

4,063,676
FRICTION WELDING METHODS AND APPARATUS
Rodger H. Lilly, Comberton, England, assignor to The Welding Institute, Cambridge, England
Filed Dec. 1, 1975, Ser. No. 636,616
Claims priority, application United Kingdom, Dec. 2, 1974, 52126/74
Int. Cl.² B23K *19/02*
U.S. Cl. 228—114 **21 Claims**

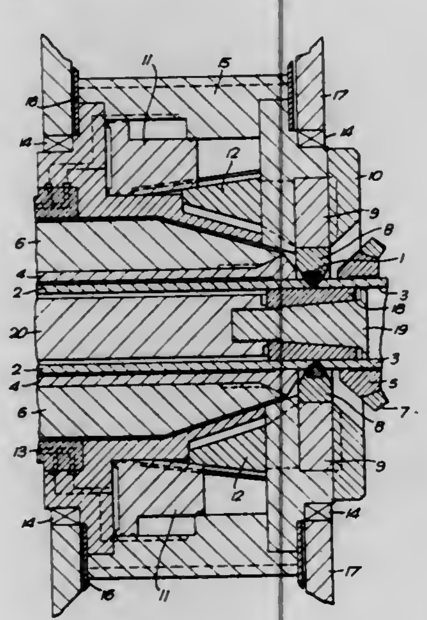

1. A method of friction welding for joining a first member with a circular hole to a second member having a circular periphery, comprising:
arranging the second member with its said circular periphery within and co-axial with the said circular hold of the first member so that the first member encircles the second member in a continuous manner and with clearance radially therebetween;
relatively rotating the first and second members about the common axis of the said hole and periphery;
during such rotation, subjecting the peripheral wall of at least one of the members, remote from the other of the members, to pressure substantially exclusively perpendicular to the said axis, the pressure being substantially uniformly distributed around the said periperal wall and being directed to move the members into frictional contact;
and continuing the relative rotation and said pressure substantially exclusively perpendicular to the said axis until sufficient frictional heat has been developed and sufficient penetration has been achieved tc permit a friction weld between the outer surface of the second member and the inner surface of the first member.

4,063,677
METHOD OF WELDING MEMBERS TOGETHER
Werner J. Bergmann, Lower Burrell, Pa., and John A. Worden, Hope, Ind., assignors to Aluminum Company of America, Alcoa Center, Pa.
Continuation-in-part of Ser. No. 529,903, Dec. 5, 1974, Pat. No. 3,974,955. This application Aug. 13, 1976, Ser. No. 714,124
Int. Cl.² B23K *28/00*
U.S. Cl. 228—242 **10 Claims**

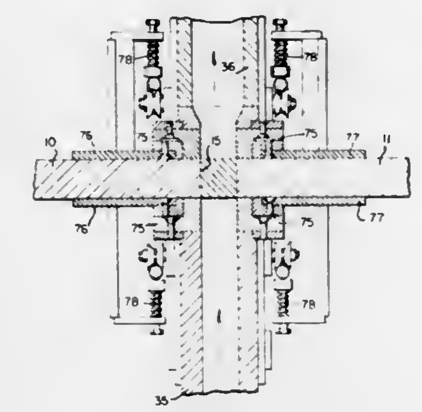

1. A method of welding together two members placed with the edge surfaces to be joined in mutually facing relationship and separated by a weld gap, comprising
endothermically heating a metal to a molten state,
flowing the molten metal through the weld gap between the edge surfaces for heating the members with the molten metal to cause melting of the edge surfaces,
continuing to flow the molten metal for a time sufficient to provide a ratio of weld gap metal to total metal flowed of at least 1:50, and
then terminating the flow of molten metal to provide for weld metal solidification in said weld gap.

4,063,678
BOX CONSTRUCTION
Richard A. Hall, Pleasanton, Calif., assignor to Willamette Industries, Inc., San Leandro, Calif.
Filed Sept. 15, 1976, Ser. No. 723,595
The portion of the term of this patent subsequent to Apr. 13, 1993, has been disclaimed.
Int. Cl.² B65D *5/10*
U.S. Cl. 229—39 R **4 Claims**

1. A box formed from an integral blank, comprising:
a first pair of rectangular side panels;
a second pair of rectangular side panels, said side panels each having end edges and side edges with said first side panels being connected to each other along a pair of adjacent end edges and each of said second panels being connected along one end edge thereof to the other end edge of each of said first panels;
a projecting portion connected to one of said second side panels along the other end edge thereof and adhesively attached to said other side panel of said second pair of side panels;
a plurality of rectangular top panels each having side edges and end edges and each connected to a side panel along a side edge;
an elongate tongue connected along another side edge of one of said top panels, said tongue having a pair of locking ears thereon, said locking ears being offset from said top panel side edges;

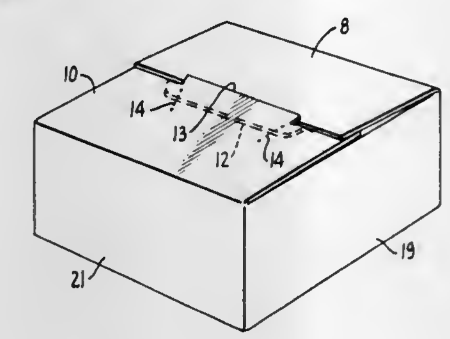

a tongue receiving means defined on another top panel, said tongue receiving means including an elongate slot defined in said another panel and having locking ear engaging sections which permit said tongue locking ears to be engaged through said slot and engage said ears to prevent withdrawal of said tongue from said slot, said slot having a longitudinal dimension less than the longitudinal dimension of said tongue so that said tongue will have an interference fit in said slot, and score lines defined in said another top panel extending from said slot for releasing said tongue from said slot by enlarging said slot; and
a plurality of trapezoidal bottom panels each having one edge connected to another side edge of each of said side panels and positioned in overlying relationship with each other to form a bottom of the box.

4,063,679
CARTON WITH TRIANGULAR SIDES
James W. Henry, Jacksonville, Fla., assignor to Potlatch Corporation, San Francisco, Calif.
Filed Apr. 21, 1976, Ser. No. 679,069
Int. Cl.² B65D *5/36*
U.S. Cl. 229—41 C **14 Claims**

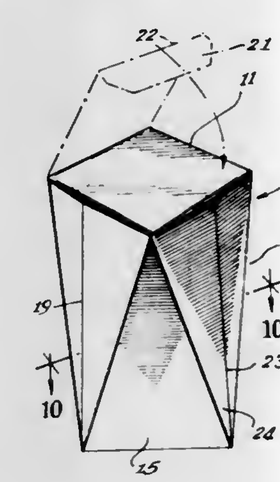

1. A knock down folding carton having a planar top closure oriented diagonally with a planar bottom closure comprising, in combination,
a planar top closure,
a planar bottom closure,
a plurality of sequential isosceles triangular side wall portions each having a base and a vertex,
said isosceles triangular side wall portions being alternately inverted with relationship to the adjacent isosceles triangular side wall portion thereby forming top and bottom sets,
the bases of one set of isosceles side wall portions defining the planar bottom closure perimeter and the bases of the other set defining the planar top closure perimeter,
whereby the opposed triangle bases define a carton with a top and bottom with each diagonally opposed to the other and whereby said carton is free standing on its bottom and top.

4,063,680
BETTING TRAY
Gerry Leo, 2590 Haig Ave., Montreal, Quebec, Canada
Filed July 19, 1976, Ser. No. 706,268
Int. Cl.² G07B *15/00*
U.S. Cl. 232—1 D **7 Claims**

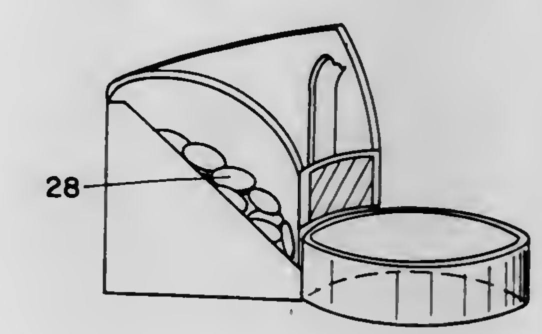

1. A betting tray comprising:
annular holding means;
said annular holding means having at least two radially directed vertical dividers whereby said annular holding means is divided into at least two compartments:
said annular holding means having means for urging objects placed therein into a center opening;
restraining means to prevent said objects from being urged into the center of said annular holding means;
means for simultaneously terminating the effect of said restraining means in all of said at least two compartments whereby said objects are allowed to be moved into the center opening of said annular holding means; and
collecting means wherein said objects from all of said at least two compartments become deposited when they are moved into the center opening of said annular holding means.

4,063,681
MAIL BOX SIGNALLING MECHANISM
Frank C. Tong, 1064 MacDavidson Circle, Dacono, Colo. 80514
Filed May 6, 1976, Ser. No. 683,919
Int. Cl.² B65B *91/00*
U.S. Cl. 232—34 **1 Claim**

1. An improved mail box signalling mechanism in combination with a typical rural mail box of the type having a bottom portion, two upwardly extending parallel side portions, a curved top portion, and a hinged end portion, said signalling mechanism comprising:
a flag rod having a internal portion that is horizontally supported for rotation between the side portions, said flag rod including a flag arm portion external to the mail box, said flag arm portion being perpendicular to said internal portion of said flag rod and being arranged for rotation, in a substantially vertical plane adjacent to one of said side portion, between first and second display positions;
a generally flat, rectangular push gate within said mail box fixedly attached to said flag rod for hinged rotation in concert therewith, said push gate including a ferrous tab portion on one end thereof and being arranged to provide a space between each side thereof and the adjacent side portion of said mail box for supporting outgoing mail in an upright position convenient for removal by a postman;
a flag secured to the flag arm portion of said flag rod for

providing a position visual indication to the box holder of the first and second display positions thereof; and

magnetic latching means mounted on the inside surface of the top portion of said mail box positioned such that the ferrous tab portion of said push gate comes into contact with said magnetic latching means for releasably securing said push gate in a substantially vertical position such that

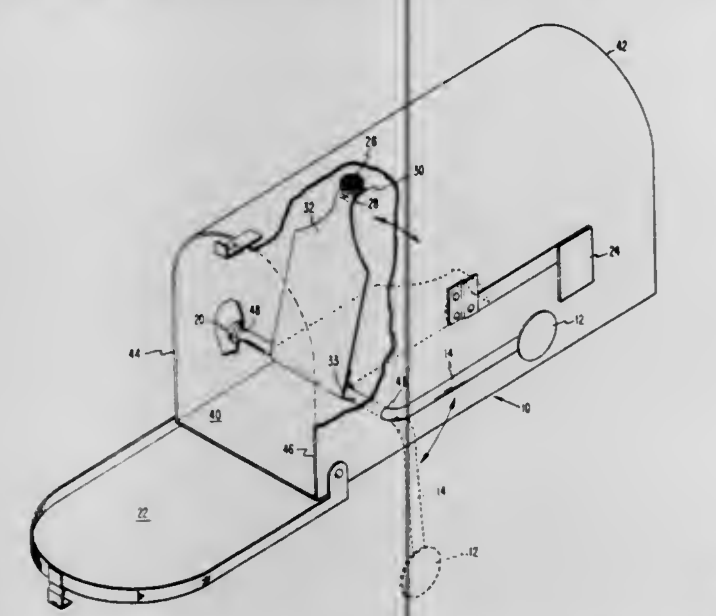

said flag arm portion of said flag rod is held in said first display position;

said push gate being responsive to actuation by the postman at the time incoming mail is deposited in the mail box for rotation away from said magnetic latching means such that said flag arm portion of said flag rod is rotated to said second display position.

4,063,682
PROPORTIONAL STROKE AUTOMATIC TEMPERATURE CONTROL SYSTEM
John W. Orcutt, Norton, Mass., assignor to Texas Instruments Incorporated, Dallas, Tex.
Continuation-in-part of Ser. No. 422,954, Dec. 7, 1973, abandoned. This application Aug. 29, 1974, Ser. No. 501,711
Int. Cl.² B60H *1/02*
U.S. Cl. 236—87 **8 Claims**

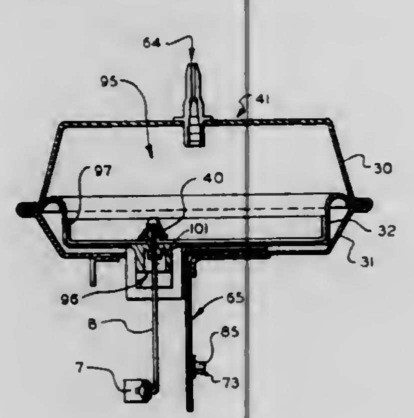

1. An automatic temperature control system comprising:
a. a single sensing means having an output for measuring temperature characteristics from more than one different source;
b. control means driven by the output of said sensing means;
c. a motor having an output member, said control means acting in conjunction with the motor to position the output member in direct relationship to the position of the output of the sensing means;
d. a distribution means operated by the output member of said motor; and
e. air temperature control components attached to said distribution means and operated thereby.

4,063,683
RADIO MOUNTING BRACKET
Leslie R. Jones, 432 Steely St., West Lafayette, Ind. 47906
Filed June 24, 1976, Ser. No. 699,470
Int. Cl.² H01R *13/60*
U.S. Cl. 339—119 R **16 Claims**

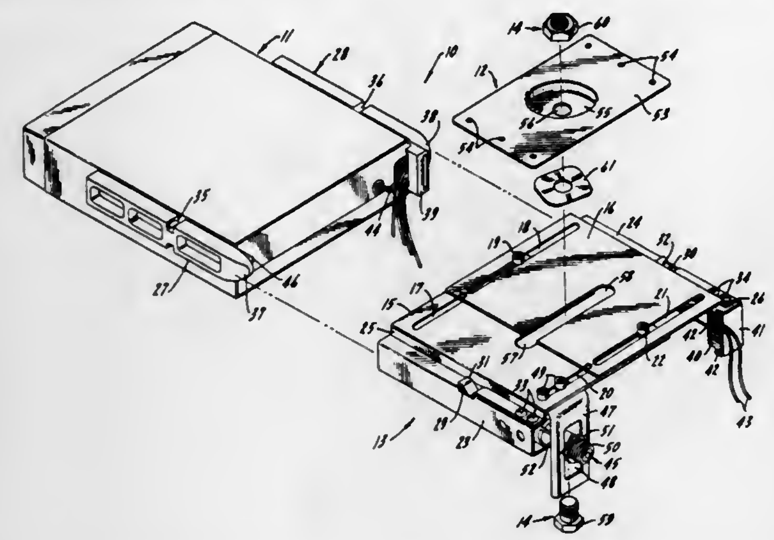

1. A bracket for mounting a radio in a vehicle comprising a base member for attaching said bracket to said vehicle, an adjustable body member for releasably receiving said radio, said body member including a pair of overlapping plates joined for relative sliding movement for adjusting the width of said body member, each of said overlapping plates terminating in a radio supporting channel with said channels facing inwardly for slidably receiving a pair of rails provided for attachment to opposing sides of said radio, each of said channels including an opening for receiving a spring detent normally urged through said opening into said channel, and means for connecting said body member to said base member for swivel movement of said radio on said bracket.

4,063,684
COMPOSITE ROCKET NOZZLE STRUCTURE
John R. O'Brien, Creve Coeur; Harry A. Holman, Jr., Ladue, and Albert W. Kallmeyer, Crestwood, all of Mo., assignors to The United States of America as represented by the Secretary of the Air Force, Washington, D.C.
Filed Nov. 25, 1975, Ser. No. 634,799
Int. Cl.² B63H *11/00;* **B64D** *33/04*
U.S. Cl. 239—265.11 **1 Claim**

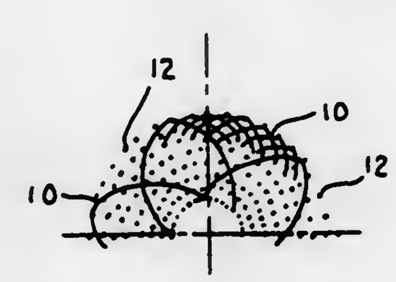

1. A multidimensional woven rocket nozzle structure comprising a nozzle body of predetermined configuration having an inlet, an outlet and a throat section therebetween, said configurated body being composed of (1) fibers running generally in the direction of the longitudinal axis and positioned radially for dimensional conformance with the general shape of said configurated nozzle; (2) a weaving fiber starting at one end of said configurated nozzle and proceeding continuously in a direction normal to said longitudinal axis with a controlled tension in order to position said longitudinal fibers in accordance with the desired radial dimensional relationship, said weaving fiber running radially and circumferentially in a predetermined weaving pattern along the length of the longitudinal axis of said body and interlocking with said longitudinal fibers in at least three dimensions; (3) said longitudinal and said

weaving fibers are composed of a material selected from the group consisting of silica, carbon, graphite and and glass fibers; and (4) a thermosetting resinous impregnant permeating the interstices of said longitudinal fibers and said weaving fiber.

4,063,685
THRUST VECTOR CONTROL BY CIRCULATION CONTROL OVER AERODYNAMIC SURFACES IN A SUPERSONIC NOZZLE
Paul L. Jacobs, Huntsville, Ala., assignor to The United States of America as represented by the Secretary of the Army, Washington, D.C.
Filed July 30, 1976, Ser. No. 710,064
Int. Cl.² B64C *15/10*
U.S. Cl. 239—265.17 **3 Claims**

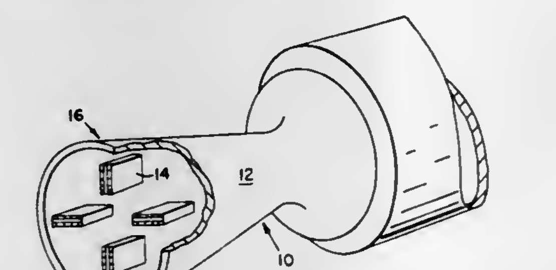

1. A thrust vector control system for a rocket having a converging-diverging nozzle for expulsion of propulsive gases therefrom comprising:
a. a source of gas;
b. four jet vanes fixedly secured in said diverging portion of said portion of said nozzle in equally spaced relation, each said jet vane having a pair of spaced surfaces disposed in angular relation to the longitudinal axis of said vane, and, a row of openings extending in spaced relation along said spaced surfaces, said jet vanes having passages therethrough in communication with said source of gas and said openings to selectively direct gas through the desired row of said openings;
c. fluid amplifier means for directing said gas through said jet vanes for controlled flow of said gas about said jet vanes whereby a side force is developed to simulate an angle of attack of said jet vanes without physical movement thereof.

4,063,686
SPRAY NOZZLE
Daniel A. Willis, Whitehall, Pa., assignor to Fuller Company, Catasauqua, Pa.
Filed Mar. 15, 1976, Ser. No. 667,225
Int. Cl.² B05B *1/32*
U.S. Cl. 239—404 **5 Claims**

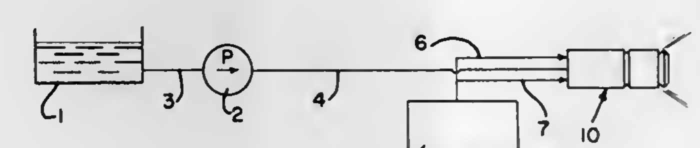

1. A spray nozzle comprising:
a first tubular member adapted to be connected to a source of compressed gas;
a second tubular member extending into one end of said first tubular member and having at least one tangential aperture therein and adapted to be connected to a source of liquid to be sprayed;
a head mounted on said second tubular member at the other end of said first tubular member;
said first tubular member, said second tubular member and said head defining an annular passage through said first tubular member having a converging portion, a straight portion and a diverging portion and liquid supplied to said second tubular member is supplied to said annular passage through said tangential aperture;
said tangential aperture in said second tubular member being positioned to supply liquid into the converging portion of said annular passage; and
a gas orifice plate mounted on said one end of the first tubular member surrounding said second tubular member and having at least one passage therethrough at an angle to the longitudinal axis of the annular passage through the first tubular member for supplying compressed gas from the source to the converging portion of said annular passage in a swirling pattern and for accelerating the compressed gas to sonic velocity for breaking into droplets and mixing with the liquid to be sprayed within the converging portion and the mixed liquid droplets and compressed gas pass through the straight portion and are discharged from the diverging portion in a swirling conical pattern.

4,063,687
COMMINUTION DEVICE
Laszlo L. Szego, deceased, late of Toronto, Canada (by Cynthia Szego, administratrix), assignor to General Comminution Inc., Toronto, Canada
Continuation of Ser. No. 614,567, Sept. 18, 1975, abandoned. This application Jan. 31, 1977, Ser. No. 764,328
Int. Cl.² B02C *15/08*
U.S. Cl. 241—110 **6 Claims**

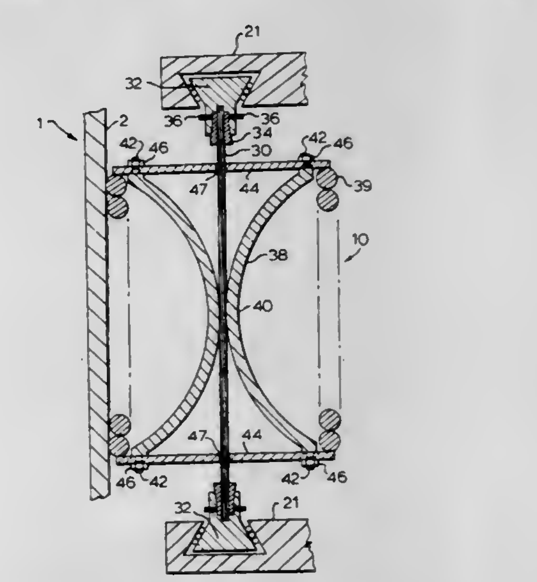

1. Material processing apparatus comprising:
a. a mass having a first central longitudinal axis and having an outer surface,
b. a chamber having a second longitudinal axis parallel to said first axis and having an inner surface of contour conforming axially substantially to that of said outer surface,
c. rotary support means rotatable about said second axis and supporting said mass for free rotation about said first axis and for contact of said outer surface with said inner surface,
d. drive means for rotating said rotary support means to rotate said mass around said inner surface,
e. said rotary support means including a pair of longitudinally spaced apart support arms, a flexible wire rope extending along said first axis between said support arms, means rotatably journaling one end of said rope in each support arm for rotation of said wire rope about said first axis, and means mounting said mass on said rope approximately at the mid-portion of said rope, said rope thereby constituting a flexible axle supporting said mass and to enable tilting of said mass about said first axis, so that under rotation imparted by said drive means to said rotary support means, said mass will be impelled under centrifugal force generally radially outwardly of said rotary support means and will be pressed into contact with said inner

surface of said chamber and will roll therearound, and so that said mass may tilt in the presence of a particle located between said outer surface of said mass and said inner surface of said chamber, thereby applying a crushing force constituted by both centrifugal and gryoscopic forces, against said particle.

4,063,688
TEXTILE YARN CARRIER
René Grellier, Valence, France, assignor to Rhone-Poulenc-Textile, Paris, France
Filed Feb. 3, 1975, Ser. No. 546,666
Claims priority, application France, Mar. 18, 1974, 74.09385
Int. Cl.² B65H *54/40, 75/18*
U.S. Cl. 242—18 DD **8 Claims**

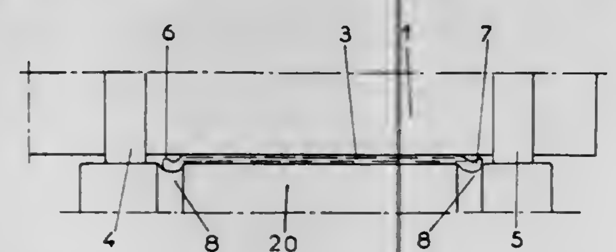

1. A tubular carrier for a textile yarn winding package, wherein the tubular carrier has a package winding area along its length and is used with a winding machine which includes a winding roll for tangential contact with the package, and wherein the winding roll has a start-up ring extending therearound generally in a plane normal to the axis of the winding roll, said ring having a diameter greater than the diameter of the roll, so that the outer surface of the ring extends beyond the outer surface of the roll, and being axially displaced from the package winding area, the winding machine further including a traversing mechanism for distributing yarn on the roll; the improvement comprising:

a pair of circular grooves around the periphery of the carrier at the areas corresponding to reversals of the traversing mechanism, said grooves having a depth at least as great as the thickness of the start-up ring.

4,063,689
RELEASABLE COUPLING DEVICE
Loredana Brovelli, 42, Corsa S. Gottardo, Milan, Italy (20100)
Filed Oct. 4, 1976, Ser. No. 729,017
Claims priority, application Italy, Oct. 31, 1975, 28916/75
Int. Cl.² B65H *75/30, 79/00;* **D01H** *3/16*
U.S. Cl. 242—46.5 **8 Claims**

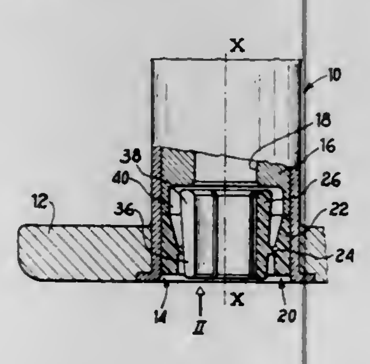

1. A device for reducing the vibrations and for taking-up the clearances in a releasable coupling between a revolving body subject to a centrifugal force and a rotatable member having an outer surface wherein said body is fitted and by which it is driven, said device comprising one or more movable masses associated with said revolving body and adapted to be radially driven away from the body axis under the action of the centrifugal force, and at least one centering means responsive to the motion of said mass or masses and thereby exerting on said outer surface an array of forces symmetrically directed toward said axis, said centering means comprising a plurality of thrust elements acting against said outer surface which are symmetrically located in respect to the axis of said body and so spaced therefrom to define a seat wherein said rotatable member can be easily introduced, housed and removed, said elements being resiliently and congruently movable in a radial direction toward the axis of said shaft or pin, to symmetrically bias said outer surface, each centering element being controlled by a related one of said masses, which is in turn urged away from the axis of the revolving body by the centrifugal force, a common supporting element mutually connecting each centering element and the related one of said masses, said supporting base circumferentially extending within said revolving body, and each centering element and related one of said masses comprising an elongated tab extending substantially in an axial direction and connected to said common base in order to form on either sides of the same base the centering element and the related control mass, respectively, the connection to said base allowing at least limited resilient oscillations of the tab about the connection zone up to the engagement of the centering element against the surface of said shaft or pin, the portion of said elongated tab defining said centering element having a bearing surface adapted to rest against said surface, and wherein the moment of inertia of said centering element tab portion, in respect of the shaft and revolving body assembly axis, is lower than that of the tab portion forming the related control mass, said control mass tab portion having a length and/or a weight greater than that of the centering element tab portion.

4,063,690
LINE WINDING APPARATUS
Takaaki Ouchi, No. 16-7, Kitamagome 2-chome, Ohta, Tokyo, Japan
Filed Nov. 5, 1976, Ser. No. 739,083
Claims priority, application Japan, Feb. 27, 1976, 51-21856[U]
Int. Cl.² B65H *75/34;* **B66D** *1/00*
U.S. Cl. 242—54 R **2 Claims**

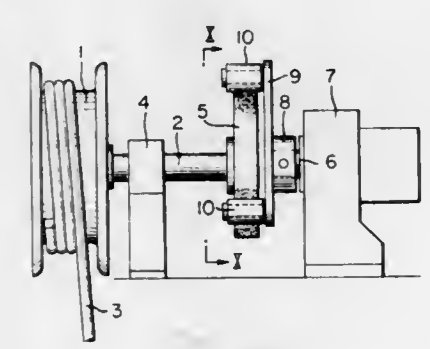

1. Apparatus for applying torque to a winding drum, comprising: a rotary winding drum; a driven member axially displaced from and rotatably fixed relative to the drum, said driven member having a circular surface portion; a rotary driving member supported for rotation independently of said drum and driven member and rotatable about an axis coaxial with said driven member; and rollers carried by said driving member at fixed locations on the driving member and rotatable about individual axes, said fixed loactions being radially outward of the axis of rotation of the driving member and each roller being firmly pressed into engagement against said circular surface portion of the driven member, at least one of the engaging surfaces of the driven member and the rollers being of an elastic material.

4,063,691
DRUM FOR TRANSPORTATION OF FLEXIBLE ELECTRIC POWER CABLE
Dosio C. Bacvarov, Greensburgh, Pa., assignor to I-T-E Imperial Corporation, Spring House, Pa.
Filed Feb. 25, 1976, Ser. No. 661,121
Int. Cl.² B65H *75/14, 75/40*
U.S. Cl. 242—54 R **3 Claims**

1. In combination, a length of flexible gas-insulated cable having a diameter greater than about 9 inches and an elongated drum for receiving said cable and for transporting said cable; said drum comprising a spool member having an axis of rotation and a pair of flat identical retainer members to define the walls of a channel; said spool member being elongated and having an oval cross-section in a plane perpendicular to said axis; said retainer members having a dimension greater than the

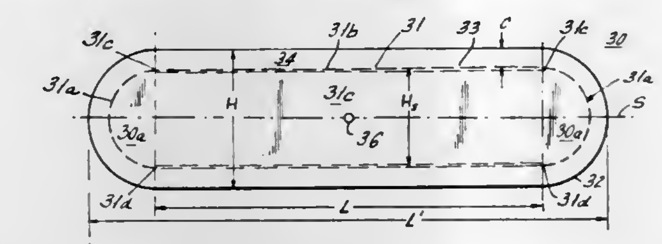

dimension of the ends of said spool member, and being secured to the ends of said spool member to define, with the exterior surface of said spool, an annular channel for receiving said cable; said cable being wound around said axis and within said channel for no more than about three layers; said retainer members having a height of about 12 feet, and being spaced from one another by about 8 feet, and having a length greater than about 15 feet.

4,063,692
WEB WINDING APPARATUS
Michael Buggy, Melrose, Mass., assignor to Vista Developments, Inc., Melrose, Mass.
Filed June 11, 1976, Ser. No. 695,130
Int. Cl.² B65H *19/04, 17/02*
U.S. Cl. 242—56.9 **28 Claims**

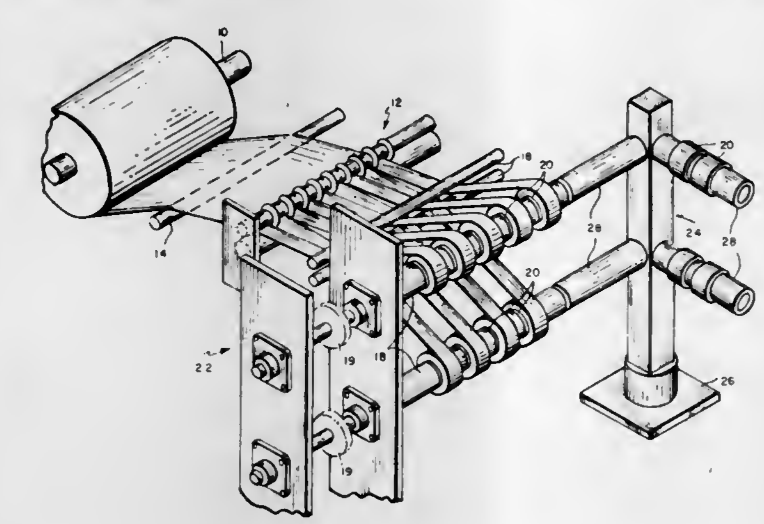

1. In a winding machine for winding a plurality of packages simultaneously, a drive shaft for receiving a plurality of cores and a clutch for clutching each core to the shaft comprising concentrically arranged inner and outer parts mounted on the shaft with the inner part fixed to the shaft and the outer part rotatably supported on the inner part by bearings for rotation relative to the inner part, said parts having at their outer and inner sides, respectively, radially protruding surfaces of predetermined axial length defining annular working gaps between the parts, particulate magnetizable material situated in the working gaps, means for magnetizing the particular material in the working gaps and means for confining the particulate material in the working gaps comprising nonmagnetizable sealing rings at the ends of the radially protruding surfaces having opposed surfaces which define closure gaps at the ends of the working gaps which converge axially outwardly of the working gaps and resilient sealing strips supported for engagement with the outer sides of the sealing rings across the closure gaps.

4,063,693
APPARATUS FOR STORING ARTICLES DISCHARGED AT A HIGH RATE FROM PRODUCTION MACHINES
Fritz Achelpohl, and Richard Feldkamper, both of Lengerich, Germany, assignors to Windmoller & Holscher, Lengerich, Germany
Filed Oct. 1, 1976, Ser. No. 728,843
Claims priority, application Germany, Oct. 2, 1975, 2544135
Int. Cl.² B65H *17/02;* **B65B** *63/04*
U.S. Cl. 242—67.1 R **7 Claims**

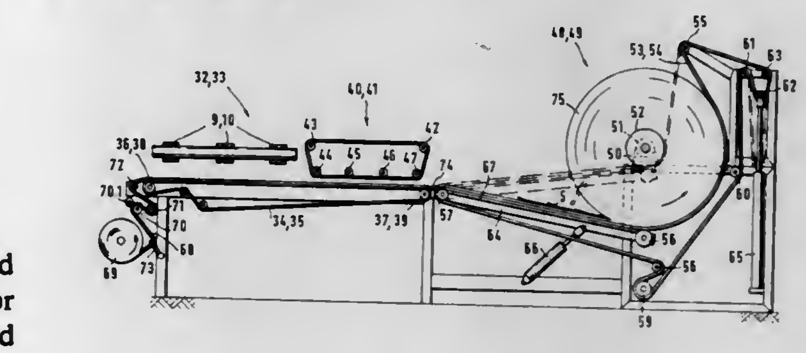

1. In an apparatus for storing sacks, bags or like flat articles discharged at a high rate from a production machine, comprising a conveyor for feeding the articles to a station which combines them to form units containing larger numbers, the improvement comprising:

two deflectors disposed on the conveyor behind one another in the conveying direction;

a slower further conveyor below each of said two deflectors disposed at right-angles to the conveyor for feeding the articles;

abutments displaced near each of said deflectors and extending parallel to the edges of each of the slower further conveyors;

frames carrying rollers associated with and adjoining the downstream ends of the slower further conveyors and being pivotable about the axis of the roller closest the downstream end of the associated slower further conveyor;

a machine stand;

a winding core freely rotatably mounted in the machine stand;

an endless driven conveyor belt supported by said frame and passing over the rollers and each frame in such manner that articles carried by the endless driven conveyor belt are applied to the winding core to form an overlapping band reel from the articles supplied in overlapping formation by the associated slower further conveyor, the endless driven conveyor belt driving the overlapping band reel; and

a roller with holding tape, the holding tape extending beneath the articles guided on the frame with the leading end of the holding tape being secured on the winding core.

4,063,694
WIRE REEL DEVICE
Norman Phillip Lemin, Purton Road, Pakenham, Victoria, 3810, Australia
Filed Feb. 27, 1976, Ser. No. 662,259
Claims priority, application Australia, Mar. 3, 1975, 0763/75
Int. Cl.² B65H *49/32, 59/02*
U.S. Cl. 242—85 **3 Claims**

1. A wire reel device, comprising:

a frame;

an axle and means mounting the axle on the frame for rotation about a generally vertical axis;

a wire reel including means for mounting a coil of wire thereon for rotation with the wire reel, said reel having two opposite ends spaced apart along a longitudinal axis thereof;

means mounting said reel, centrally of one end thereof, upon said axle for rotation with said axle, said mounting means

including a pivot member having a generally horizontal axis permitting said mounting means to be articulated about said horizontal axis between a first position wherein said reel axis is generally horizontal and a second position wherein said reel axis is generally vertical;

an arm means secured on said frame and extending to a location above said axle;

a first connector on the arm means and a second connector on the opposite end of said reel, these two connectors

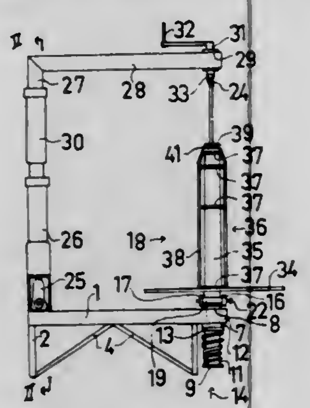

being engageable when said mounting means is in said second position; said connectors, at least when engaged, including means providing for relative rotation between said arm means and said reel about a generally vertical axis, so that said reel may be rotated in a sense to rotatively pay-out or take-up wire when said connectors are engaged;

said arm means including means for raising and lowering the effective height of said first connector for exerting a varied degree of upward pull upon said reel.

4,063,695
SEAT BELT RETRACTOR
Kiyomitsu Oshikawa, Kariya, Japan, assignor to Nippondenso Co., Ltd., Kariya, Japan
Filed Apr. 22, 1976, Ser. No. 679,496
Claims priority, application Japan, Apr. 30, 1975, 50-52715
Int. Cl.² A62B *35/02;* B65H *75/48*
U.S. Cl. 242—107.4 A **6 Claims**

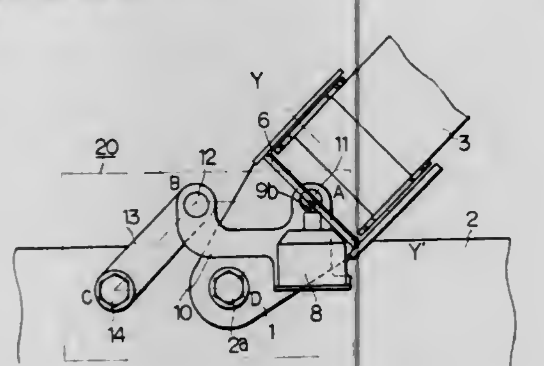

1. A seat belt retractor for a motor vehicle comprising;

a frame including a base pivotally secured with respect to the floor of a motor vehicle

a reel having at least one ratchet plate and a shaft mounting said plate and rotatably received by said frame;

a belt looped over said reel shaft and having one end fixed to said reel;

means for mounting said frame and reel so that said frame pivots to maintain said reel shaft perpendicular to the direction in which said belt is extended;

a locking lever pivotally supported by said frame for engagement with said ratchet plate to block further rotation of said reel in a belt extending direction;

inertia means, operatively coupled to said locking lever, for driving said locking lever into engagement with said ratchet plate when decleeration of said motor vehicle exceeds a predetermined value; and

linkage means connecting said inertia means and said floor for maintaining said inertia means parallel to said floor regardless of the angular displacement of said frame.

4,063,696
SLOTTED TAKE-UP PACKAGE TUBE FOR OPEN-END SPINNING MACHINES
Vincent S. Kelly, Greensboro, and Murry W. Munns, Jr., Smithfield, both of N.C., assignors to Burlington Industries, Inc., Greensboro, N.C.
Filed Aug. 23, 1976, Ser. No. 716,799
Int. Cl.² B65H *75/28*
U.S. Cl. 242—125.1 **11 Claims**

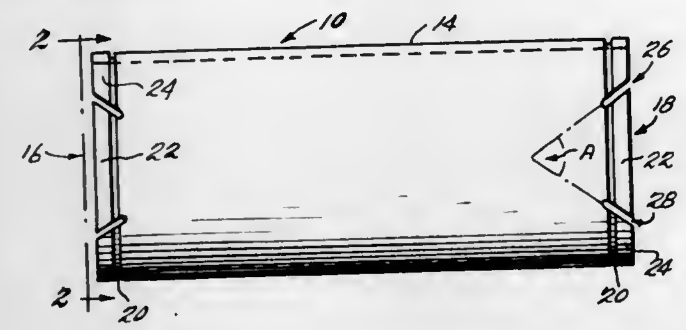

1. An improved yarn take-up package tube comprising a hollow cylindrical casing, means for defining a pair of non-parallel slots extending inwardly in a converging fashion from the rim of said tube along the length thereof, said slots being spaced apart a predetermined distance about the circumference of said tube, said slots being of a sufficient width so as to define a relatively straight passageway through said hollow cylindrical casing.

4,063,697
DEVICE FOR UNTHREADING YARN FROM A BOBBIN
Jean Venot, Roanne, France, assignor to ASA S.A., Roanne, France
Filed Sept. 21, 1976, Ser. No. 725,332
Claims priority, application France, Sept. 24, 1975, 75.29822
Int. Cl.² B65H *49/02;* D02H *1/00;* D03J *5/08*
U.S. Cl. 242—131 **11 Claims**

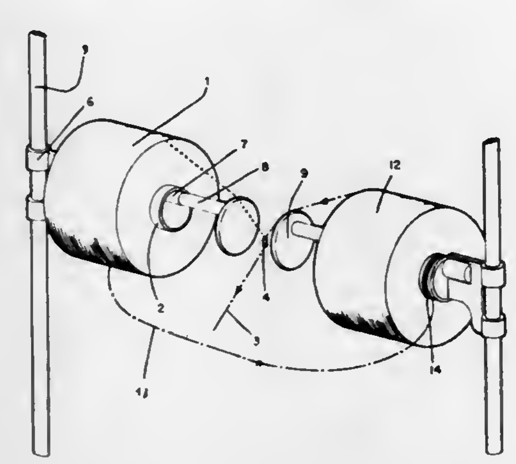

1. A device for unwinding, by unthreading, a textile yarn from a bobbin which is carried by a bobbin carrier and which defines a longitudinal axis, comprising:

a. an unthreading guide supported substantially on said longitudinal axis and through which the yarn passes as it is unwound from the bobbin;

b. a spindle for holding the bobbin in place;

c. a rod fixed to the end of said spindle and lying substantially parallel to the axis of said spindle; and

d. a circular disc member carried by said rod and which defines a formed edge surface, the member being supported along said axis at a location intermediate the bobbin and the unthreading guide so that the yarn is engageably supported by said edge surface while being unwound,

wherein the angle formed by the straight line which joins said edge surface and the facing edge of the bobbin relative to said axis is equal to the half-angle of unthreading, and wherein the angle formed by the straight line between said edge and the unthreading guide, relative to said axis, is markedly greater than the half-angle of unthreading.

4,063,698
LANDING GEAR FOR AN AERODYNE
Jean Masclet, Paris, France, assignor to Messier-Hispano, S. A., Montrouge, France
Filed Nov. 16, 1976, Ser. No. 742,241
Claims priority, application France, Nov. 21, 1975, 75.35576
Int. Cl.² B64C *25/12*
U.S. Cl. 244—102 R **3 Claims**

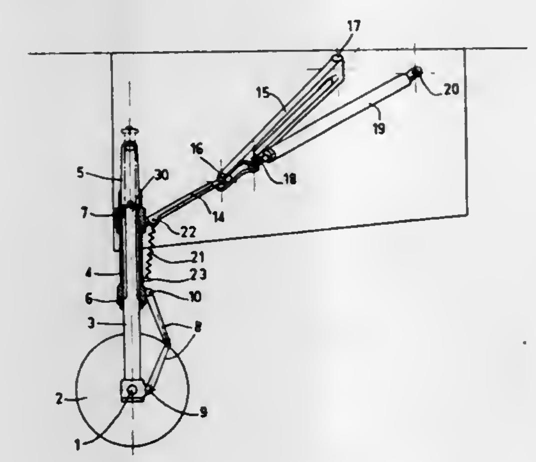

3. Landing gear for an aerodyne which is raised towards the rear of the aerodyne, comprising for each undercarriage a structural member associated with shock absorber means connected to at least one wheel, said structural member being mounted so as to pivot on the aerodyne about an articulation axis and cooperating with an offset strut and a truss actuating jack equipped with at least one internal locking device, characterized in that the offset strut comprises an arm and a rod articulated to one another by one of their ends, the said arm being also articulated to its other end to a fixed point on the aerodyne and the rod also being articulated by the other end to a fixed point of the structural member, the truss actuating jack being articulated on the one hand to the arm at a fixed point of the latter and on the other hand to a fixed point of the aerodyne, whereby in the landing gear down position said jack is substantially aligned with the said rod in a generally coaxial relationship so that the aerodynamic forces which oppose the lowering of the undercarriages are used to aid the locking of the truss actuating jack and consequently the undercarriages in the landing gear down position, together with the raising of the undercarriages beyond the alignment position of the rod and the arm, the latter of which form a rigid, generally unitary structure in said landing gear down position.

4,063,699
FAIL-SAFE BLOCK CONTROL SYSTEM FOR DRIVERLESS VEHICLES
Gunnar A. Wallgard, Huskvarna, Sweden, assignor to Saab-Scania Aktiebolag, Linkoping, Sweden
Filed Dec. 7, 1976, Ser. No. 748,211
Claims priority, application Sweden, Dec. 10, 1975, 7513891
Int. Cl.² B61L *1/10, 21/08, 21/10*
U.S. Cl. 246—63 R **3 Claims**

1. A control system for the automatic control of vehicles that move in one direction along a defined path along which elongated radiators are arranged end-to-end, each vehicle having receiving means comprising detector means for detecting signals radiated from a radiator to which the vehicle is adjacent and a control instrumentality to which detected movement command signals can be transferred and by which the vehicle is caused to move in accordance with demands signified by such signals transferred to the control instrumentality, said path being divided into longitudinally adjacent blocks, each comprising a plurality of said radiators and intended to be occupied by only one vehicle at a time, each block having a front end which is defined from a rear end of the block next adjacent to it in said direction by a block boundary, and the radiator in the front end portion of each block being a departure radiator which extends in said direction only to its adjacent block boundary and from which no movement command signals are radiated when the next adjacent block in said direction is occupied by a vehicle, said control system being characterized by the receiving means in each vehicle further comprising:

A. an enabling means for detecting a special "clear" signal that can be radiated only from a departure radiator along with movement command signals, and for producing an enabling output in response to a detected "clear" signal;

B. A monostable memory element having active and inactive conditions,

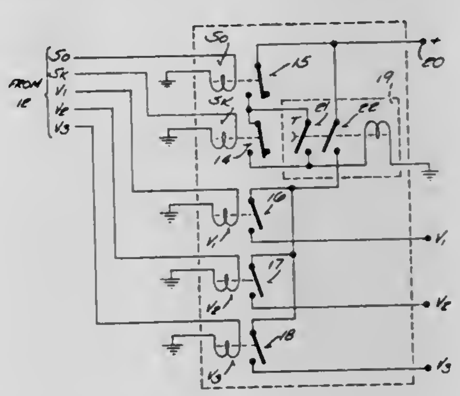

1. said memory element being connected and arranged to permit detected movement command signals to be transferred to the control instrumentality only when the memory element is in its active condition,

2. said memory element being connected with the enabling means and being responsive to an enabling output therefrom to assume its active condition; and

C. means so connecting the detector means with the memory element that the memory element is maintained in its active condition only by a substantially continuous succession of movement command signals received after an enabling output is fed to the memory element, so that the memory element reverts to its inactive condition in consequence of a substantial interruption in the detection of movement command signals and thus renders the control instrumentality non-responsive to subsequently detected movement command signals units such time as the enabling means again detects a "clear" signal.

4,063,700
DOUBLE SADDLE HANGER CLAMP
Bill J. Brewer, 425 Devon Ave., Park Ridge, Ill. 60068
Filed Mar. 11, 1976, Ser. No. 666,108
Int. Cl.² F16L *3/02, 33/10*
U.S. Cl. 248—62 **7 Claims**

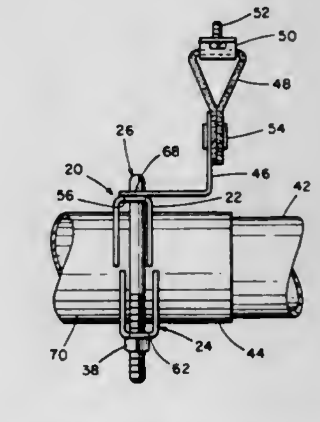

1. In a hanger means for supporting and clamping a tele-

scoped connection of a muffler-tailpipe device under a vehicle frame, comprising an apertured bracket member supported from said vehicle frame, and means for clamping said muffler-tailpipe device to said apertured bracket member, the improvement wherein said clamping means comprise a U-bolt and a pair of saddle members supported by said U-bolt, each saddle member having a U-shape provided with a pair of legs joined by a bight, each leg having a semi-circular cut-out, said saddle member with said respective cut-outs defining therebetween a substantially circular opening for admitting said telescoped connection of said muffler-tailpipe device, said bight of each saddle member having a pair of openings adapted to receive said U-bolt, said saddle members being supported by said U-bolt with their respective legs facing each other but offset from each other.

4,063,701
CHAIR ATTACHED HOLDER
Rhodes E. Wray, 1 Wilson Lane, Staunton, Va. 24401
Filed Mar. 1, 1976, Ser. No. 663,128
Int. Cl.² A47F *5/00*
U.S. Cl. 248—293 **5 Claims**

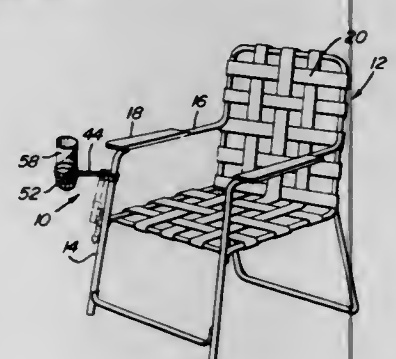

1. An article holder comprising a supporting bracket, a single elongated arm attached to said bracket and projecting generally horizontally therefrom, an annular member on the outer end of said arm, and a net of mesh material supported from and depending from said annular member, said net including an open bottom end defined by a flexible member with the open bottom being larger than the interstices in the net and having a perimeter less than the perimeter of said annular member for supporting articles inserted downwardly through the annular member when such articles have a perimeter greater than the open bottom end of the net, said bracket being in the form of a clamp, and means pivotally connecting the arm to the clamp to enable the arm, annular member and net to be pivoted to a collapsed generally vertical stored position, said means including a vertical slot in the end of the arm, a flange on said clamp, said flange including a pivot pin means extending through the slot, and cooperating abutment means associated with the flange and arm to retain the arm horizontal when the pin means is in the upper end of the slot and permit the arm to swing downwardly when the arm is moved upwardly to disengage the abutment means.

4,063,702
CORNER PROTECTORS
Melvyn Wilde, 21 Lime Grove, Lowton, Warrington, Cheshire, and Robert John Sutton, 50 Westbourne Road, Birkdale, Southport, Lancashire, both of England
Filed Nov. 9, 1976, Ser. No. 740,238
Int. Cl.² A47B *95/00*
U.S. Cl. 248—345.1 **4 Claims**

1. In a corner protector, for the corner of an article having upper and lower parallel faces and adjacent edge faces, comprising floor and ceiling planar parts to slide over respective ones of said parallel faces and wall parts extending between the floor and ceiling parts to contact respective ones of said edge faces, the improvement in that the wall parts are defined by flanges on the ceiling part, and flanges on the floor part spaced apart from said flanges on the ceiling part, and including spring means at said flanges and between the ceiling and floor parts to

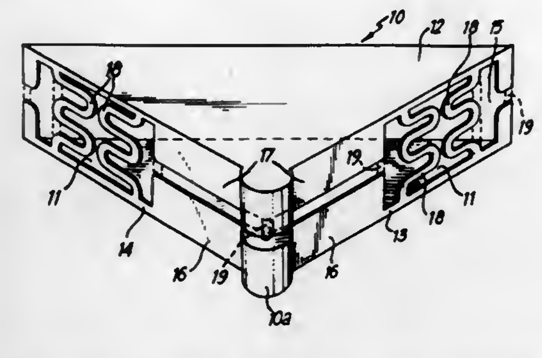

allow the floor and ceiling parts and their flanges to move apart elastically.

4,063,703
FOLDING MEANS FOR SUPPORTING LEGS OF ROASTER OVEN WITH HIGH STABILITY
Min Ching Shy, 20, Alley 18, Lane 109, Hoping Street, Yang Ho Town, Taipei Hsien, China /Taiwan
Filed Jan. 5, 1977, Ser. No. 757,054
Int. Cl.² F16M *11/38;* **F24C** *15/08*
U.S. Cl. 248—439 **5 Claims**

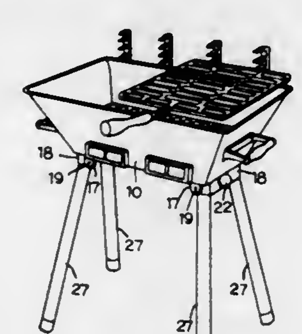

1. A foldable means for supporting legs of a roaster oven or the like having an oven body and two sets of said foldable means for supporting legs, said foldable means in assembly being provided respectively on both ends of the bottom of an oven body; said foldable means comprising:
a fixing plate fixed on the bottom of the body adjacent one end thereof and having a downwardly extending tongue plate adjacent its end of the oven body and two downwardly extending vertical brackets on opposite sides thereof;
a U-shaped frame with means pivotally connecting the free ends of said U-shaped frame to the two brackets on said fixing plate whereby said frame is foldable and extendable;
said tongue plate having a screw hole;
a fixing screw being provided on the central position of an intermediate portion of said U-shaped frame connecting leg portions thereof, said screw having an adjusting rotating button for extending or retracting said screw, and
two supporting legs each of which is respectively fixed in two corners inside the U-shaped frame,
said U-shaped frame being pivotally adjustable to the extent that said screw may be inserted into said screw hole.

4,063,704
FISHING ROD HOLDER
Warren F. Rother, 849 Delaware Ave., Buffalo, N.Y. 14209
Filed Dec. 23, 1976, Ser. No. 753,798
Int. Cl.² A01K *97/10*
U.S. Cl. 248—515 **8 Claims**

1. A holder adapted to be mounted on an object and adapted to releasably hold any of a plurality of different types of fishing rods, comprising:
support means adapted to be mounted on said object; and

cradle means mounted on said support means and adapted to releasably hold a fishing rod, said cradle means including a cradle member, a resilient member having one portion mounted on said cradle member and having two free portions adapted to be folded to embrace proximate portions of said fishing rod, and at least one fastener means associated with each resilient member free portion and

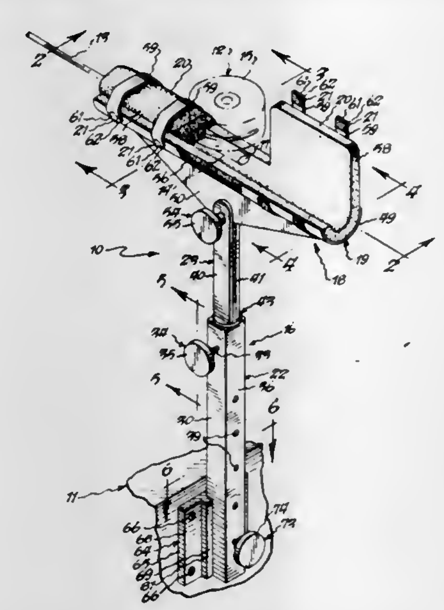

arranged to selectively engage said cradle member and adapted to hold the associated resilient member free portion in such rod-engaging position;
whereby said holder may be used to releasably hold any of a plurality of different types of fishing rods, and may readily permit removal of a rod by selective disengagement of said fastener member from said cradle member.

4,063,705
VACUUM FORMING MOLD
Richard J. Vodra, P.O. Box 353, Wooster, Ohio 44691
Continuation of Ser. No. 514,198, Oct. 11, 1974, abandoned. This application Apr. 15, 1976, Ser. No. 677,409
Int. Cl.² B29C *1/00*
U.S. Cl. 249—80 **2 Claims**

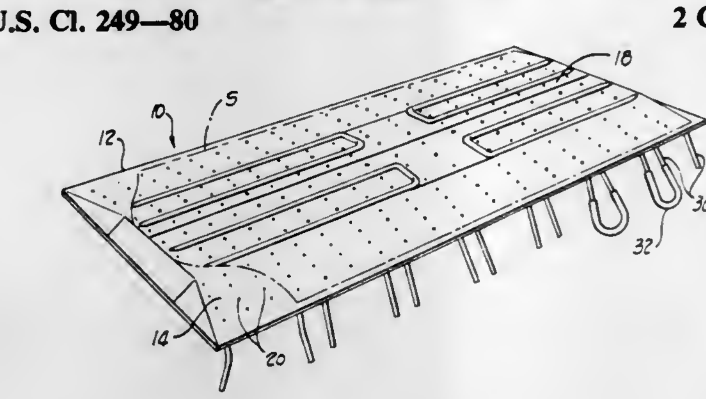

1. A mold for vacuum forming, comprising a lamination of metallic layers at least one of which is electroformed, with interconnected narrow and elongated gaps between two laminae and along predetermined paths, said gaps serving as fluid-conducting passages and said lamination having a surface portion defining a forming area that is then relative to the extent of the forming area and centrally unsupported, the lamination being thicker along the predetermined paths than elsewhere by an amount substantially equal to the height of the gaps; apertures, small with respect to the forming area, extending through a metallic layer and communicating directly between said surface portion and said passages; said passages subtending substantially less than the entire forming area; means to connect said passages to means for changing the fluid pressure within the passages; and means to circulate heat exchange fluid in heat-conductive relationship with said lamination behind said forming area.

4,063,706
PINCH VALVE FORMED FROM A WIRE HELIX
Calvin E. Osborne, Sr., P.O. Box 606, Borger, Tex. 79007
Filed Sept. 30, 1976, Ser. No. 727,993
Int. Cl.² F16K *7/04*
U.S. Cl. 251—4 **17 Claims**

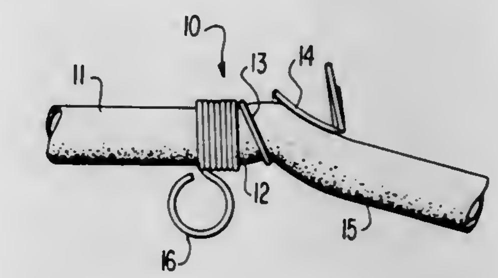

1. In a valve of the type which includes a length of flexible tubing, the opposite sides of the wall of the tubing being pinched together to control the flow of fluid therethrough, the improvement which comprises a resilient wire helix having spacing between adjacent turns which is variable between a first pair of adjacent turns and a second pair of adjacent turns such that the opposite walls of said tubing, when engaged between said first pair of turns, will be pinched to stop the flow of fluid, and, when engaged between said second pair of turns, will be substantially undistorted to allow substantially free flow of fluid, and means to mount said wire helix on said tubing for movement between said first and second pair of turns.

4,063,707
VALVE PROTECTIVE MECHANISM FOR POWER OPERATED VALVES
John Zouzoulas, King of Prussia, Pa., assignor to Philadelphia Gear Corporation, King of Prussia, Pa.
Filed Jan. 23, 1976, Ser. No. 651,976
Int. Cl.² F16K *31/53*
U.S. Cl. 251—79 **10 Claims**

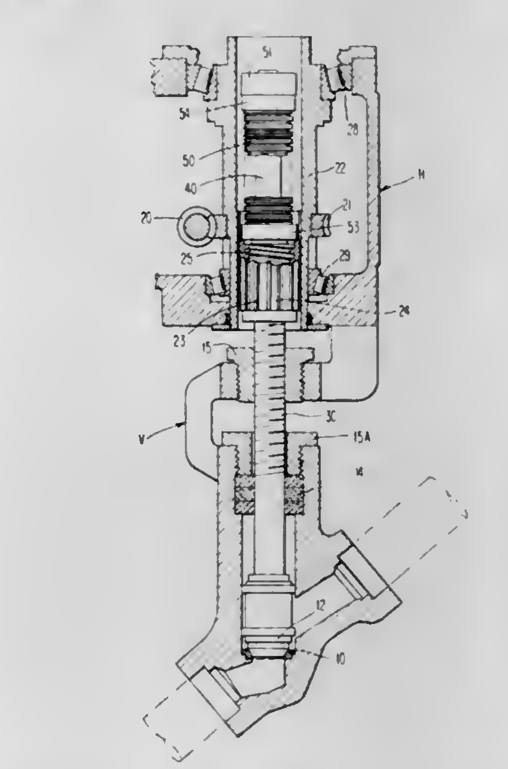

1. An energy-absorbing valve protective mechanism for protecting a valve against the application of excessive thrust or torque by an axially-movable rotatable shaft driven by a power drive which tends to overdrive in the valve-closing direction, said protective mechanism comprising:
a. a valve housing;
b. a drive housing mounted on and fixed to said valve housing;
c. a nut fixed in said valve housing against axial and rotational displacement;
d. an externally-threaded rotatable stem threaded through

said nut for axial movement relative to said nut in response to rotation of said stem;

e. an internally-keyed drive sleeve mounted for rotation in said drive housing but fixed against axial displacement;

f. power drive means for driving said drive sleeve rotationally, said power drive means including a gear connected to said drive sleeve, said gear being fixed in said drive housing against axial movement;

g. an externally-keyed internally-threaded torque sleeve coaxially disposed with said drive sleeve and in keyed engagement therewith, said torque sleeve being adapted to be driven rotationally by said drive sleeve, said torque sleeve being movable axially on said keys relative to said drive sleeve;

h. external thread means on said stem in engagement with the threads of said torque sleeve and adapted to be driven rotationally by the threads of said torque sleeve;

i. a stem extension in said drive housing fixed to and projecting beyond the driven end of said stem, said stem extension being rotatable with, and movable axially with, said stem;

j. energy-absorbing compression spring means supported coaxially on said stem extension and rotatable therewith;

k. said spring means being disposed in the path of axial movement of said torque sleeve so as to be compressed by axial movement of said torque sleeve relative to said stem for absorbing the kinetic energy of the torque applied to said torque sleeve after said stem has reached a valve-closed position, thereby inhibiting further rotational or axial movement of said stem, and thereby causing said torque sleeve to move axially relative to said stem.

4,063,708

QUICK DISCONNECT DEVICE FOR FLEXIBLE TUBES

Edward M. Smith, Pike Township, Knox County, Ohio, assignor to The Gorman-Rupp Company, Mansfield, Ohio

Filed July 8, 1976, Ser. No. 703,677

Int. Cl.² F16L *29/00, 37/28*

U.S. Cl. 251—149.4 **12 Claims**

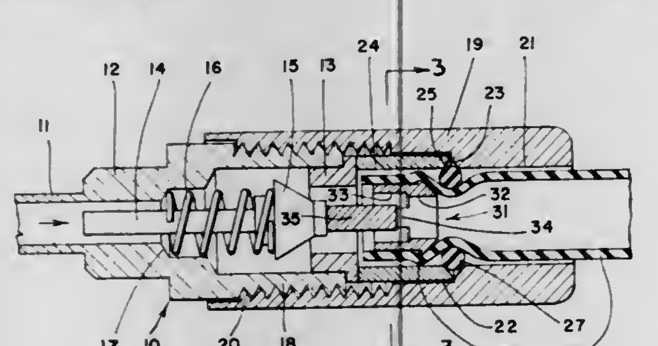

1. A quick disconnect device for connecting a flexible tube to a poppet valve comprising an annular actuator inserted in the end of said tube and having a central stem at one end for engaging the valve poppet when the tube is inserted into the valve, an outer sleeve screwed onto the valve having an inner annular recess terminating in a shoulder, a thimble within said recess having one end forming an annular channel at said inner shoulder, and an O-ring for fitting within said channel surrounding said tube behind the other end of said actuator and adapted to constrict said tube and force the actuator against the valve poppet when the sleeve is tightened and to permit withdrawal of said tube when the sleeve is loosened.

4,063,709

BUTTERFLY VALVE

Thierry Antoine Lorthiois, Laxou, France, assignor to Pont-A-Mousson S.A., Nancy, France

Filed Oct. 2, 1975, Ser. No. 619,123

Claims priority, application France, Oct. 18, 1974, 74.35183

Int. Cl.² F16K *25/00*

U.S. Cl. 251—173 **13 Claims**

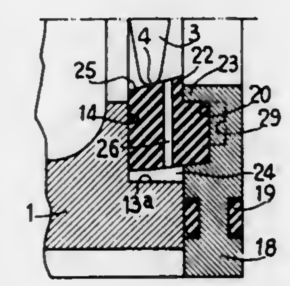

1. In a butterfly valve comprising a part in the form of a valve body and a part in the form of a butterfly valve member, means defining a fluid passageway extending throughout the body, the valve member being rotatable about an axis in said passageway between an extreme valve passageway closing position and an extreme valve passageway opening position, the passageway having an upstream inlet end for the inlet of the fluid and a downstream outlet end for the fluid, one of said two parts having an annular cavity, an annular sealing element disposed in the cavity with an inner end of which cavity the sealing element defines an annular chamber, said one part and said sealing element constituting a unit and the other of said parts defining an annular surface for sealing contact with the sealing element in said extreme valve passageway closing position of the valve member, means for retaining the sealing element in the cavity, said unit defining a conduit which is capable of acting as an inlet and exists permanently irrespective of the position of the valve member and irrespective of the state of the sealing element and extends from the chamber to said passageway and is located longitudinally of said passageway on a side of the valve member adjacent said upstream inlet end of the passageway and is open to said passageway irrespective of the state of the sealing element when the valve member is in said extreme valve passageway closing position so as to enable the chamber to receive the fluid pressure which prevails on the side of the valve member adjacent said upstream inlet end of the passageway; the improvement comprising means defining a conduit in said unit and capable of acting as an outlet and permanently extending from said annular chamber to said passageway and positioned relative to said other part to be closed off from said passageway downstream outlet end by said other part when the valve member is in said extreme closing position and to be put by said other part in communication with said passageway outlet end and thereby relieve the pressure in said chamber when and only when the valve member has been rotated away from said extreme closing position about said axis but before said annular surface has lost contact with said sealing element in a part of said valve member which is the most remote from said axis transversely of said passageway and located adjacent said downstream outlet end of the passageway in said extreme valve passageway opening position of the valve member, said conduit capable of acting as an outlet being in a region of said unit which is the most remote from the axis of rotation of the valve member transversely of said passageway and is located on the side of an immediately adjacent portion of the valve member which is adjacent said outlet end of said passageway when the valve member is in the vicinity of said extreme valve passageway closing position.

4,063,710

REDUCTION APPARATUS FOR OPENING AND CLOSING A VALVE

Toshimi Minami, Osaka, and Hidematu Sioda, Hatano, both of Japan, assignors to Tomoe Technical Research Company, Osaka, Japan

Filed May 17, 1976, Ser. No. 686,997

Claims priority, application Japan, June 13, 1975, 50-72470

Int. Cl.² F16K *31/53*

U.S. Cl. 251—248 **2 Claims**

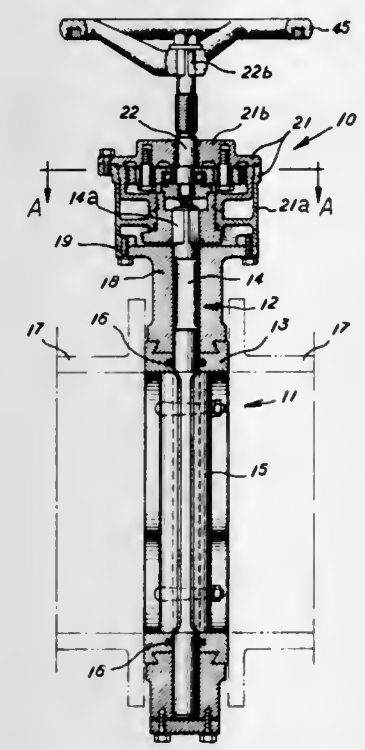

1. A reduction apparatus for opening and closing a valve, the valve comprising a valve body having an inner circumferential surface, a valve seat fixed to the inner circumferential surface of the valve body, a valve stem extending through the valve body and the valve seat and rotatably supported by the valve body, the valve stem having an outer end extending outwardly beyond the valve body and an inner end extending inwardly beyond the valve body, and a disc-shaped valve member mounted on said inner end of the valve stem for controlling fluid flow through the valve body,

the reduction apparatus comprising:

a first casing mounted on the valve body,

a second casing mounted on the first casing,

an input shaft extending rotatably through said second casing, the input shaft including an eccentric shaft portion positioned inwardly of said second casing,

an external gear having a central opening through which said eccentric shaft portion extends,

a bearing between said eccentric shaft portion and the surface of said central opening of the external gear,

said external gear having a plurality of ports extending therethrough radially outwardly of said central opening,

a pin assembly positioned within each of said ports in said external gear, each pin assembly comprising a pin secured to said second casing and a cylindrical sleeve formed of antifriction material surrounding the pin and engageable with the surface of the port, the radius of each of said ports being equal to the sum of the outer radius of said cylindrical sleeve and the eccentricity of said eccentric shaft portion relative to said input shaft,

an internal gear rotatably supported by the inner surface of said first casing and engaging said external gear, said internal gear having a larger number of teeth than said external gear,

said first casing having a supporting portion extending radially inwardly toward the axis of said input shaft and having a central opening therein,

a rotary member rotatably supported within said central opening of the supporting portion of the first casing and non-rotatably connected to said internal gear and to said outer end of said valve stem for transmitting torque from the internal gear to the valve stem, the rotary member including at least one radially outwardly extending projection,

a stop member adjustably mounted on the inner surface of said first casing engageable with said projection on said rotary member for limiting rotation of said rotary member, the stop member being adjustable to vary the amount of rotation of the rotary member, and

a bearing between said rotary member and said input shaft for rotatably supporting said input shaft and said bearing between said eccentric shaft portion and said external gear.

4,063,711

CABLE GUIDING DEVICE

Sizuo Orihara, Toyokawa, Japan, assignor to Tokyo Seiko Rope Manufacturing Co., Ltd., Japan

Filed Sept. 8, 1976, Ser. No. 721,332

Claims priority, application Japan, Sept. 10, 1975, 50-110270; Jan. 29, 1976, 51-8721

Int. Cl.² B66D *11/38*

U.S. Cl. 254—134.3 R **26 Claims**

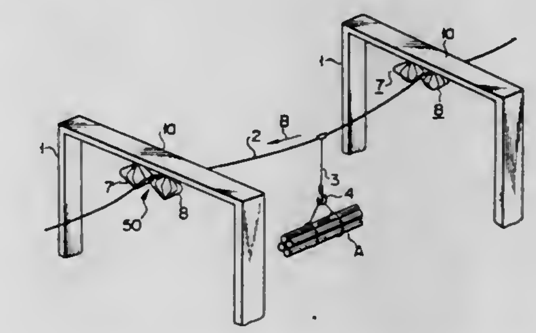

1. A cable guiding device for a cable having carrier suspension members hanging from said cable comprising:

supporting means,

a pair of rotors, each of said rotors comprising;

a vertical shaft rotatably mounted on said supporting means and disposed adjacent to the shaft of the other rotor,

a plurality of detent elements formed on the periphery of the shaft engageable with the detent elements of the other rotor, said detent elements being arranged at an equal circumferential interval as any adjacent pairs of the engaged detent elements of both the rotors defining a space for admitting therein each of said carrier-suspension members hanging from the cable; and

cable guiding means formed on the upper portion of the shaft and forming a V-shape together with the cable guiding means of the other roller so as to receive and guide the cable, said rotors being rotated together with said detent elements by the advancing movement of the cable so as to allow the carrier-suspension members to pass between the rotors.

4,063,712

CABLE TAKE UP LOAD BINDER

Vernon E. Arbogast, 1715 E. Front St., Coeur d'Alene, Idaho 83814

Filed July 26, 1976, Ser. No. 708,315

Int. Cl.² A63B *61/04*

U.S. Cl. 254—164 **11 Claims**

1. A cable take up load binder, comprising:

a "U" shaped base having two upstanding spaced ears;

a hollow winding spool rotatably mounted between the ears;

a first ratchet wheel affixed to the spool at one end thereof adjacent one of the ears;

a first pawl operatively engaging the first ratchet wheel and pivotably mounted to the one ear;

a second ratchet wheel rotatably mounted to the remaining

ear and rotatably journaling the remaining end of the spool;

a second pawl operatively engaging the second ratchet wheel and pivotably mounted to the remaining ear;

a first plate affixed to the spool at the one end;

a torsion spring received coaxially within the spool and having one end thereof connected to the first plate;

a second plate affixed to the second ratchet wheel and receiving the remaining end of the spring;

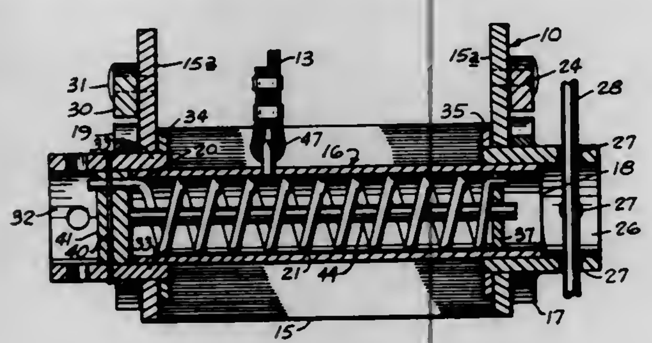

first hub means on the first ratchet wheel for receiving a turning element for applying direct torsional force to the spool; and

second hub means on the second ratchet wheel for receiving a turning element for selectively applying torsional spring force against the spool independent of the forces applied through the first hub means.

4,063,713
GUARD RAIL
Colin Anolick, and Howard James Kutsch, both of Wilmington, Del., assignors to E. I. Du Pont de Nemours and Company, Wilmington, Del.
Filed Jan. 26, 1977, Ser. No. 762,827
Int. Cl.² E01F *15/00*
U.S. Cl. 256—13.1 **8 Claims**

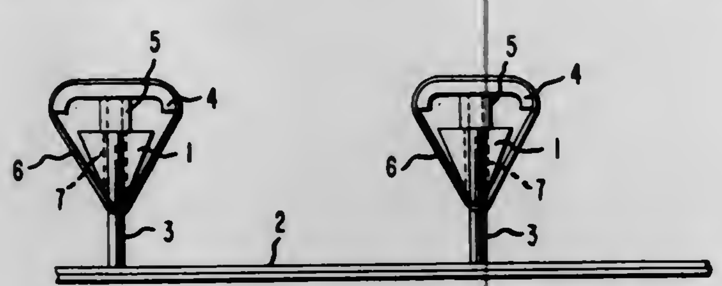

1. A shock-absorbing unit for vehicle barriers comprising, in combination, a post provided with upper and lower generally coparallel passages therethrough for the reception of individual push rods, the inboard ends of said push rods supporting a rail, means for supporting an oriented elastomeric belt fixed to the outboard ends of said push rods, said belt of oriented elastomer encircling said support means and said post between said passages, and means for pretensioning the elastomeric member a predetermined amount thereby affording an energy absorber responsive to displacement of the push rods under impact.

4,063,714
FENCE FORMED FROM PREFABRICATED SECTIONS
Robert E. Kirkwood, Sacramento, Calif., assignor to The Raymond Lee Organization, Inc., New York, N.Y.
Filed May 12, 1976, Ser. No. 685,546
Int. Cl.² E04H *17/16*
U.S. Cl. 256—24 **4 Claims**

1. A fence kit which may be assembled in modular form from standard units of

a plurality of fence posts, each adaptable for staking into ground,

a plurality of flat panels and

a plurality of U-shaped support spacers

said fence posts each fitted with spaced clip means to each detachably support an end section of each of a pair of spacers in spaced array so that the spacers lie in spaced horizontal array when installed, with each pair of spacers enclosing and supporting the opposed horizontal edges of a flat panel, when each spacer is mounted to a pair of said fence posts by said clip means, and when said fence posts are oriented in spaced vertical array, with

each said clip means including an angle member fastened to a fence post so that a projecting section of the angle member extends radially from the axis of the attached post, said projecting section being of a size and shape to freely support a spacer end section resting on the said angle member projecting section, in the erect position of the

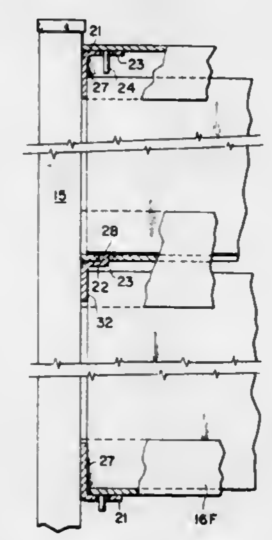

fence post, with the projecting section extending along an axis substantially parallel to the axis of the supported spacer, so that the attached spacers extend between attached fence posts in the plane of the axes of a pair of installed posts,

said angle member projecting section and each said end section of the spacer fitted with cooperating detent and hole fastening means located so that in the installed position, the axis of the detent means is parallel to the axis of the post and the cooperating detent and hole fastening means are located to permit the spacer and the projecting section of the angle member to be freely separated by movement of the spacer along a direction that is both substantially parallel to the axis of the fence post and in the direction away from the bottom end of the fence post.

4,063,715
MATERIAL MIXER-TRITURATOR
Paul J. Felker, 300 Columbus Drive, and Shubel H. Owen, Rte. 4, Box 238, both of Marshfield, Wis. 54449
Filed Sept. 3, 1976, Ser. No. 720,189
Int. Cl.² B01F *9/10, 15/02*
U.S. Cl. 366—187 **14 Claims**

1. A material processing device comprising a frame, a bowl mounted on said frame for rotation about an upright axis, said bowl having an inlet opening, means for rotating said bowl, said bowl having an internal wall which is so shaped that when the bowl is rotated centrifugal guide vanes suspended in fixed position from said frame portion within an upper portion of said bowl whereby the bowl is rotatable relative to said vanes, each guide vane having an inner discharge end and having an outer end shaped and positioned to intercept material which has been moved upwardly on the wall of the rotating bowl, and said guide vanes being shaped and positioned to direct streams of said material from their inner ends toward the center of the bowl where said streams may collide to cause one of mixing and trituration of the materials, and in which the bowl has a bottom discharge opening, a gate for said discharge opening, and in which there are deflector means for directing

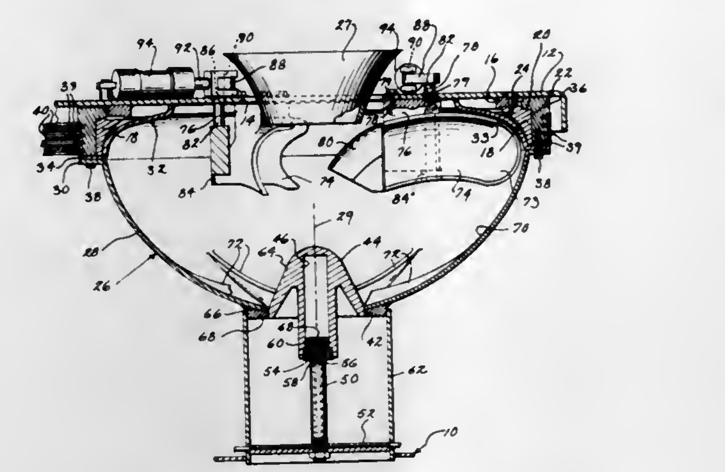

material from the streams at the center of the bowl downwardly toward said opening when said gate is open.

4,063,716
PORTABLE MIXING DEVICE
Malcolm T. Aitken, Jr., R.D. No. 3, Saratoga Springs, N.Y. 12866
Filed Nov. 10, 1976, Ser. No. 740,674
Int. Cl.² B28C *5/16*
U.S. Cl. 366—100 **11 Claims**

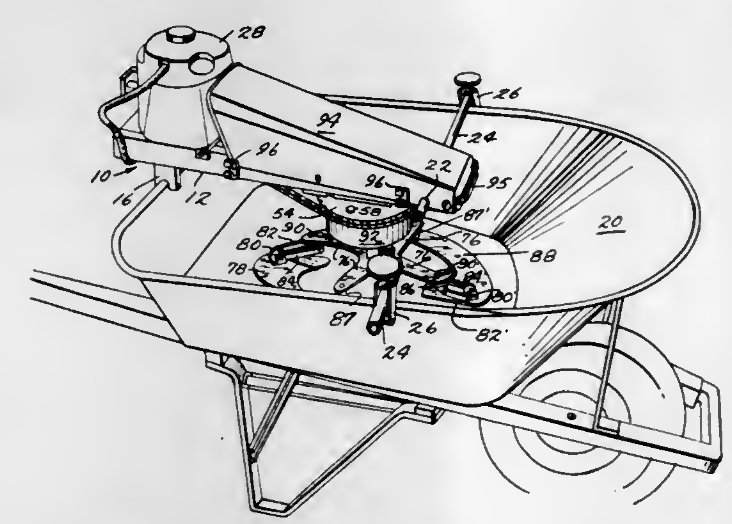

1. A mixer adapted to rest on an edge of a container holding materials to be blended, said mixer comprising:

a frame;

means provided at one end of said frame for engaging the container edge at a first location;

means projecting outwardly from opposite sides of the frame adjacent the opposite end thereof, said projecting means being adapted to engage the container edge at additional locations;

a motor mounted on the frame;

a drive assembly rotatably supported by said frame in sapced relationship with respect to said motor and a bottom of said container, said drive assembly being rotatable about a first axis and including a shaft rotatable about a second axis parallel to said first axis;

means coupling the motor to said drive assembly for translating operation of the motor into rotation of the drive assembly about said first axis and displacement of said shaft in a path concentric with respect to said first axis, said shaft simultaneously rotating about the second axis; and

a blade assembly secured to an end of said shaft and positioned between the drive assembly and the bottom of said container, said blade assembly being dimensioned to project outwardly from the shaft a distance greater than the distance between said first and second axes whereby rotation and displacement of the shaft results in turning of the blade assembly and movement of the blade assembly in an orbital path to encompass the area beneath said drive assembly.

4,063,717
MULTIVENTED TWIN-SCREW EXTRUDER
Max Lorens Booy, Wilmington, Del., assignor to E. I. Du Pont de Nemours and Company, Wilmington, Del.
Filed Feb. 1, 1977, Ser. No. 764,579
Int. Cl.² B29B *1/10*
U.S. Cl. 366—75 **8 Claims**

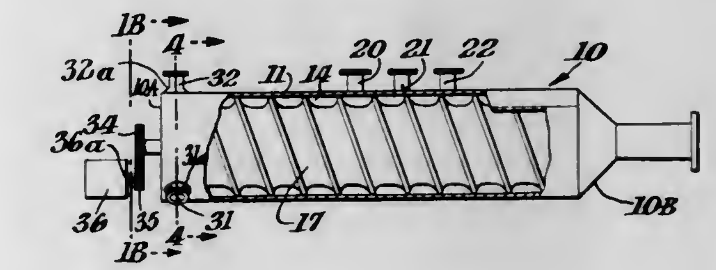

1. In a gaseous phase disengaging apparatus for a liquid phase process material having process material entrance and discharge ends, a housing provided with a pair of overlapping cylindrical axially parallel bores each provided with substantially identical co-rotating helical screws advancing said process material toward said discharge end, said helical screws being in relatively close clearance with said bores for the full transverse extent of said bores except in the region where said bores overlap, throughout which overlap region said screws interact in individual screw tip to peripheral expanse proximity, liquid phase raw process material inlet port opening sequentially into each screw channel of said apparatus and axially spaced outside and intermediate gaseous phase vent ports of radius R_v opening internally into continuous communication with each apparatus material advancing passage, the axis of said outside vent ports being disposed inwardly of the housing bores by an amount a such that $R_v \leqq a$, the center-to-center axial spacing S_v between said outside ports expressed in terms of t = lead of screw, R_s = outside radius of screw, R_v = radius of said vent ports, n_T = number of tips and γ = the outward angular inclination of said vent ports from normality with respect to the plane including the axes of said screws, being such that $S_v = t/2\,(2 - 3/n_T) + (t/\pi)\cos^{-1}(1 - a/R_s) - (\gamma t/\pi)$ whereas said intermediate vent ports are axially disposed at approximately equal intermediate spacings between said outside vent ports.

4,063,718
PROCESS AND APPARATUS FOR EXTRUDING PLASTIC AND SIMILAR MATERIALS
Klaus Koch, Gleidingen, Germany, assignor to Paul Troester Maschinenfabrik, Germany
Filed Sept. 29, 1976, Ser. No. 727,990
Claims priority, application Germany, Sept. 29, 1975, 2543328
Int. Cl.² B29B *1/10*
U.S. Cl. 366—75 **4 Claims**

1. Apparatus for extruding plastic material, and rubber and other thermoplasts and elastomers, comprising two screw extruders of which a first extruder feeds into a second extruder, each of said extruders comprising an extruder screw rotatable in a housing and having driving means at one end of the housing and a discharge at the opposite end, said second extruder having an inlet with which the discharge of said first extruder is connected and having degassing means associated with said inlet, the housing of said second extruder having an outlet between said inlet and said driving means, and the screw of said second extruder having between said inlet and the discharge of said second extruder a screw portion acting in a

direction to propel material from said inlet to said discharge and having between said inlet and said outlet a screw portion

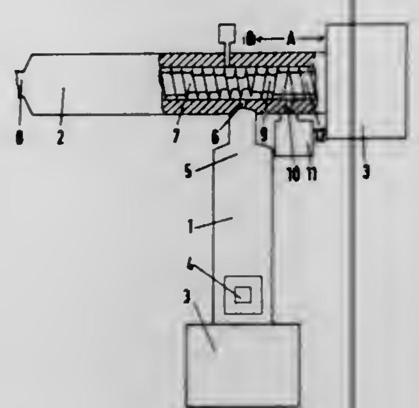

of reverse pitch for propelling from said inlet to said outlet material that is separated by said degassing means.

4,063,719
HEAT TREATMENT APPARATUS
William W. Stephens, Albany, Oreg., and James F. McKeighen, Huntington Beach, Calif., assignors to Kawecki Berylco Industries, Inc., Reading, Pa.
Filed Mar. 8, 1976, Ser. No. 664,576
Int. Cl.^{2} C21D *1/62*
U.S. Cl. 266—130 **9 Claims**

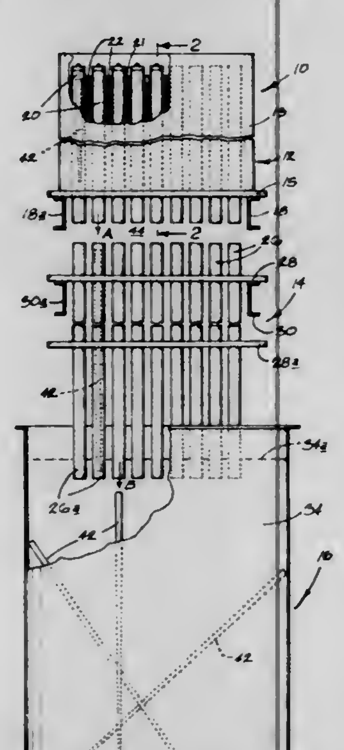

1. An apparatus for heat treating an elongate article comprising:
reservoir means for holding a quenching liquid;
furnace means disposed above said reservoir means for applying heat to the article with the article releasably held therewithin; and
guide means disposed between said furnace means and said reservoir means for orienting the article with its axis substantially vertical while conducting the article in a substantially vertical free-fall path extending into said quenching liquid upon release of said article from said furnace means.

4,063,720
AUTOMATIC UNPLUGGING ALUMINOTHERMIC WELDING CRUCIBLE
Camille Boutet, 68 rue Ordener, 75018 Paris, and André Fevre, 105 rue de la Bruyere, 59230 Saint-Amand-Les-Eaux, both of France
Continuation of Ser. No. 449,336, March 8, 1974, abandoned. This application June 13, 1975, Ser. No. 586,590
Claims priority, application France, Mar. 23, 1973, 73.10509
Int. Cl.^{2} C21B *15/00*
U.S. Cl. 266—167 **3 Claims**

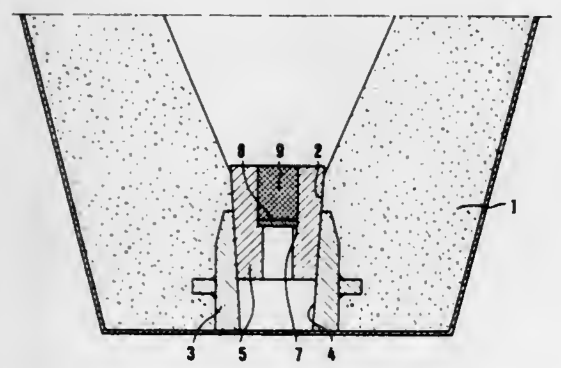

1. In an aluminothermic welding crucible made of refractory material, shaped generally as a truncated cone with a vertical axis, said cone tapering inwardly to a lower base thereof and comprising a conical bore, a plugging means disposed within said conical bore for sealing the lower base of said crucible before it is filled, the improvement wherein said plugging means consists of a casting socket disposed in said bore and extending at least partially through said bore, said socket having a bore and a counterbore which join to form a shoulder facing the inside of the crucible; a metal washer disposed on the shoulder; and a plug made of iron oxide and aluminum agglomerated with a binder disposed in said bore in the socket means and resting on the washer, said plug being thermally destructible by melting within a predetermined time after molten welding material is added to the crucible.

4,063,721
METHOD FOR THE SEPARATION OF SEGREGATIONS AND IMPURITIES FROM MATERIAL MIXTURES BY CENTRIFUGING AND EQUIPMENT FOR THE EXECUTION OF THE METHOD
Hans Leis, Ottobrunn, Germany, assignor to Messerschmitt-Bolkow-Blohm Gesellschaft mit beschrankter Haftung, Munich, Germany
Filed Sept. 8, 1976, Ser. No. 721,366
Claims priority, application Germany, Sept. 18, 1975, 2541602; July 8, 1976, 2630674; Aug. 17, 1976, 2636948
Int. Cl.^{2} C22B *9/02*
U.S. Cl. 266—204 **21 Claims**

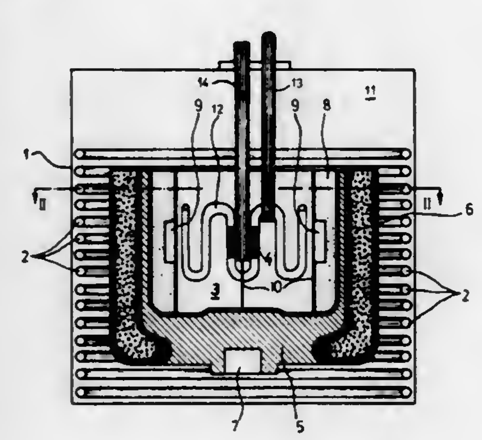

1. A rotor for use with a centrifuge for the separation of segregations from material mixtures, in particular for the sedi-

mentation of high melting metals and metal alloys and their impurities, said rotor comprising:
a shape-defining basic part, the outer surface of said basic part being braced by a compound material bandage,
a heat-deflecting, protective coating on the inner surface of said rotor;
means for heating said rotor being disposed in the center thereof; and
means for cooling said rotor being disposed in the inside thereof.

4,063,722
EJECTOR PISTON
Pierre H. Mailliet, Howald, Luxembourg, assignor to S.A. des Anciens Etablissements Paul Wurth, Luxembourg, Luxembourg
Filed Nov. 22, 1976, Ser. No. 743,802
Claims priority, application Luxembourg, Nov. 26, 1975, 73869
Int. Cl.^{2} C21B *7/12*
U.S. Cl. 266—273 **31 Claims**

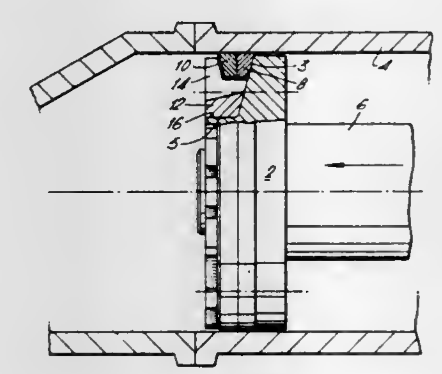

1. In an apparatus for use in the dispensing of viscous material, the apparatus including a cylinder having a longitudinal axis from which the material is expelled under pressure via an opening of reduced diameter, an improved ejector piston for installation in the cylinder comprising:
a piston body;
holding plate means, said holding plate means being affixed to said piston body at the forward end thereof in the direction of piston travel during the delivery stroke to expell material from the cylinder, said holding plate means cooperating with said piston body to define a groove about the periphery of said piston body, said groove having a base portion and outwardly extending wall portions, said holding plate means at least in part defining a plurality of circumferentially spaced flow paths through said plate means for material in the cylinder in front of the piston body, said flow paths directly communicating with the base of said groove; and
piston ring means disposed in said groove, said piston ring means including at least one ring member having a leading face inclined radially outwardly and forwardly with respect to said axis, a portion of said ring member inclined leading face being directly exposed to material in the cylinder via said flow paths, a portion of said piston ring means facing the base portion of said groove also being directly exposed to material in the cylinder via said flow paths.

4,063,723
SPLINE ELEMENT FOR SEAT IN A VEHICLE
Wilhelm Wingen, Feldkirchen, Germany, assignor to Fritzmeier AG, Lenzburg, Switzerland
Filed Sept. 21, 1976, Ser. No. 725,336
Claims priority, application Germany, Sept. 22, 1975, 2542182; Nov. 27, 1975, 2553410
Int. Cl.^{2} F16F *9/06*
U.S. Cl. 267—131 **8 Claims**

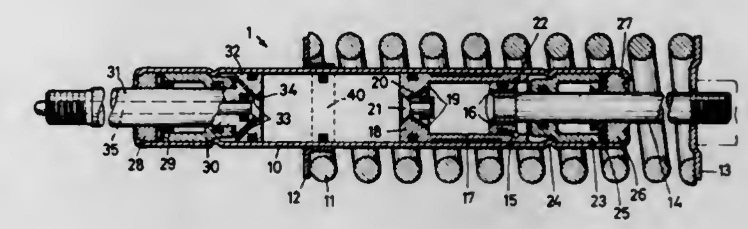

1. A spline element for a seat of a vehicle, which can be adjusted according to the height and weight load, comprising:
an operational cylinder defining an enclosed pressure gas compartment;
a pair of pistons adjustably disposed within said cylinder adjacent opposite ends thereof;
each of said pistons being equipped with through flow channels leading from the gas compartment to the opposite sides of said pistons;
a locking valve for each of said pistons which can close the flow channels on the rear side of the respective piston.
one of said pistons forming a height adjusting piston and having a rod which leads from the operational cylinder as a stop end of the spline element, its locking valve being operable from the outside by a tappet which extends in the axial direction through the piston rod;
the other of said pistons being formed as a floating piston, its locking valve being operable against the resistance of a lock spring by a weight adjusting piston which, under even pressure on both sides, can be inserted against the floating piston;
means on said floating piston for mechanically limiting the return stroke of said weight adjusting piston;
the other stop end of the spline element being formed by the piston rod of said weight adjusting piston which is drawn out of the operational cylinder; and
a spring of the spline element being propped by said other stop end and by the operational cylinder.

4,063,724
IMAGE TRANSFER DEVICE
Masashi Suda, Iruma, Japan, assignor to Canon Kabushiki Kaisha, Tokyo, Japan
Filed July 13, 1976, Ser. No. 704,825
Claims priority, application Japan, July 18, 1975, 50-87968; July 18, 1975, 50-87969; July 18, 1975, 50-87970; July 18, 1975, 50-87971; July 18, 1975, 50-87972
Int. Cl.^{2} B65H *29/06*
U.S. Cl. 271—277 **16 Claims**
1. An image transfer device for transferring an electrophotographically formed image onto a transfer medium, comprising:
means for gripping the transfer medium;
supporting and moving means for supporting said gripping means and moving the same cyclically in an endless path;
means for feeding the transfer medium to be gripped by said gripping means, said feeding means having a movable paper guide plate disposed adjacent to the path of cyclical movement of said gripping means for guiding the transfer medium into engagement with said gripping means, and having means for moving said guide plate away from said gripping means to permit unimpeded continuous movement of the transfer medium as it is guided to said gripping means and subsequently carried away thereby;
corona transfer means for transferring said image onto said transfer medium gripped by said gripping means;

separator means for separating said transfer medium from said gripping means; and

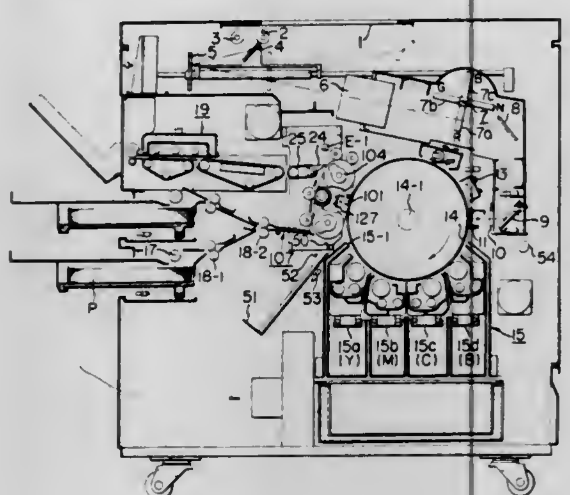

transport means for transporting the separated transfer medium.

4,063,725
FOLDABLE CUBE FORMING GEOMETRIC DEVICE
Thomas A. Snyder, 1143 Monroe St., Eugene, Oreg. 97402
Filed Oct. 7, 1976, Ser. No. 730,330
Int. Cl.[2] A63B *9/00*
U.S. Cl. 272—113 7 Claims

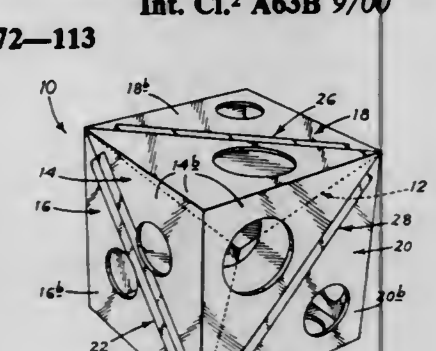

1. A changeable-configuration geometric device comprising an equilateral tetrahedron having edges defining a plurality of equilateral triangular faces,
four right tetrahedrons each having edges defining an equilateral triangular face of substantially the same size as each face in said equilateral tetrahedron, and
means hinging each of said tetrahedrons to another tetrahedron, whereby said tetrahedrons may be swung relative to one another to produce an infinite number of overall configurations for said device, one of said configurations taking the form of an equilateral cube, with said one configuration resulting from each of said equilateral triangular faces in said right tetrahedrons being positioned in confronting, abutting congruent relationship with a different face in said equilateral tetrahedron.

4,063,726
ELECTRONICALLY CONTROLLED HYDRAULIC EXERCISING SYSTEM
Robert J. Wilson, 8401 E. Cambridge, Scottsdale, Ark. 85257
Filed Apr. 26, 1976, Ser. No. 680,499
Int. Cl.[2] A63B *21/00*
U.S. Cl. 272—130 5 Claims

1. An exercise apparatus selectively operable in a number of specific exercising modes comprising in combination:
a fluid actuated piston means for selectively providing in each of two opposite directions exercise resistance proportional to the setting of a control means,
a control means for varying the operation of said piston means to selectively provide in each of two directions exercise resistance,
said control means comprising a logic network includng a flip flop for causing said piston means to reciprocate automatically between two predetermined limits, and

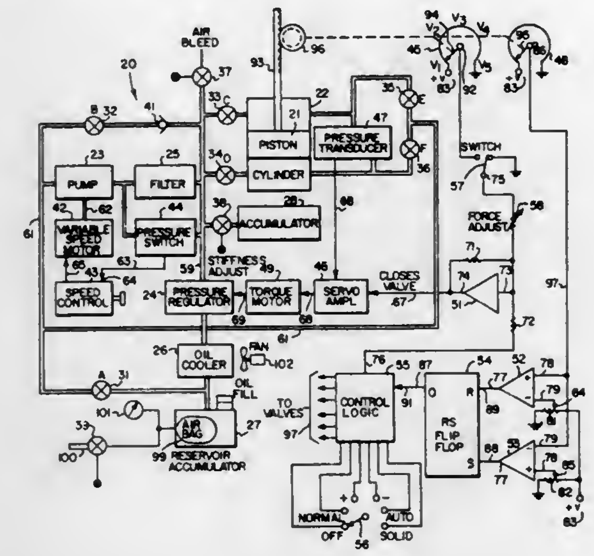

means for automatically and selectively proportioning in varying amounts the exercise resistance in each of said two directions.

4,063,727
ARM WRESTLING EXERCISE DEVICE
James A. Hall, 40 Town Hill Ave., Danbury, Conn. 06810
Filed July 19, 1976, Ser. No. 706,221
Int. Cl.[2] A63B *21/04*
U.S. Cl. 272—136 5 Claims

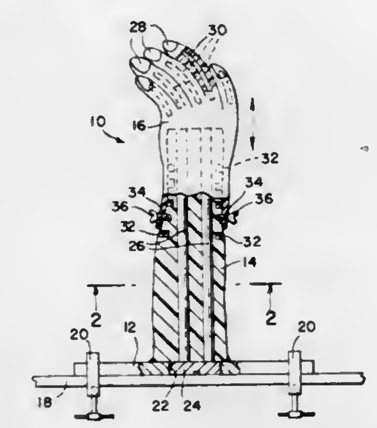

1. An arm wrestling exercise device comprising:
a rigid base member; p1 an elongated pivot arm secured detachably and non-movably at one end thereof to said base member normally extending perpendicularly therefrom, said arm being formed of a resilient material and having spring tensioning means embedded therein for providing predetermined resistance to the pivotal movement of said arm about the said one end thereof;
a hand grip member having a plurality of resilient finger elements detachably secured to the free end of said arm to be pivotable therewith, each of said finger elements being provided with an internally positioned spring element for providing predetermined resistance to the pivotal movement of such fingers;
and means on said arm and hand grip member cooperable to permit securing of said hand grip member to said arm at any of a plurality of distances relative to said base.

4,063,728
CONVERTIBLE POOL TABLE GAME APPARATUS
Rudolf Zemanek, 516 S. Orlando Way, Vancouver, Wash. 98664
Filed Dec. 16, 1975, Ser. No. 641,288
Int. Cl.[2] A63D *15/04*
U.S. Cl. 273—4 R 6 Claims

1. Game apparatus for use in connection with a pool table having a horizontal planar playing surface for supporting a

plurality of billiard-type balls, and side rails arranged about the edge of said playing surface, comprising:
a. a cover member removably mounted on said playing surface, said cover member bearing indicia corresponding to a given game to be played with the apparatus;
b. side board means removably seated upon the peripheral edge portions of said cover member for retaining said cover member on said planar surface, said side board

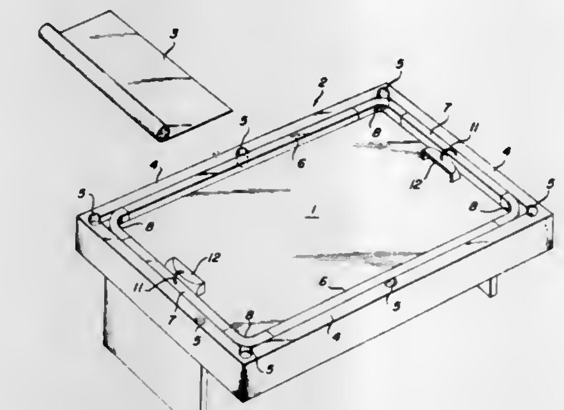

means including opposed pairs of linear side and end wall portions; and
c. means defining a pair of goal means adjacent each of said end wall portions, respectively, each of said goal means including a goal member containing an opening the size of which corresponds with the diameter of at least one ball, and resilient means supporting said goal member inwardly from the corresponding end wall portion.

4,063,729
PORTABLE PITCHING MOUND
William D. Hollaway, 2000 34th St., N.W., Canton, Ohio 44709
Filed Apr. 5, 1977, Ser. No. 784,703
Int. Cl.[2] A63B *71/00*
U.S. Cl. 273—25 4 Claims

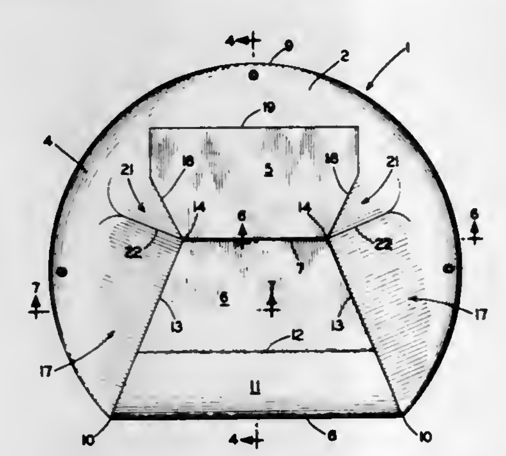

1. Portable pitching mound construction including a mound body having flat lower and generally convex upper surfaces defined by an arcuate outer edge portion terminating in a straight chord-like front edge; the upper surface being formed with parallel offset front and rear flat surface areas which are also parallel with the lower mound body surface; an upright shoulder having ends and bottom and top edges; the front and rear areas extending respectively forwardly and rearwardly from said bottom and top edges; said shoulder being parallel with said front edge and located midway between the front edge and a rear arcuate mound edge portion; the front area having flared extemities at each side extending laterally outward from the shoulder ends to the ends of the front edge; and a mound surface area cylindrically shaped in cross section connecting the front area with said front edge.

4,063,730
TENNIS RACQUET SWING TRAINING DEVICE
Ronald E. Bates, New York, N.Y., assignor to Tennis-Tee, Inc., New York, N.Y.
Filed June 25, 1976, Ser. No. 699,925
Int. Cl.[2] A63B *69/38*
U.S. Cl. 273—29 A 5 Claims

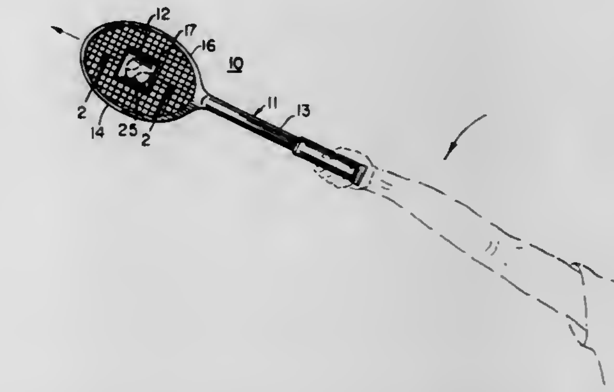

1. A tennis swing practice device comprising a conventional tennis ball, a lawn tennis racket including longitudinally spaced proximal handle portion and distal head portion, said head portion including a peripheral frame and interwoven strings extending across said frame to define a striking web, and guide means separably secured to said head portion and including a longitudinally extending cylindrical receptacle releasably housing said tennis ball and having an open distal end and an inside diameter greater than the diameter of said tennis ball and means forward of said tennis ball in the direction of said distal end restricting the passageway along said receptacle to a dimension slightly less than the diameter of said tennis ball to necessitate a predetermined longitudinal pressure on said tennis ball to automatically traverse said restricting means while swinging of said tennis racquet.

4,063,731
GOLF TOOL
Barry E. Kitay, Van Nuys, Calif., assignor to Maurice Jay Cooper and Ethel Cooper, both of Venice, Calif.
Filed Aug. 16, 1976, Ser. No. 714,912
Int. Cl.[2] A63B *57/00*
U.S. Cl. 273—32 B 2 Claims

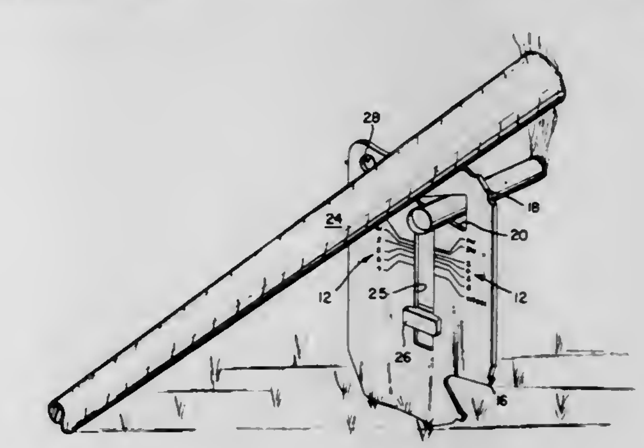

1. A golfer's tool fabricated from a flat plate of semi rigid sheet material comprising in combination;
distance measuring and club selection scales inscribed on opposite lateral surfaces of said flat plate;
an indicating cursor situate in a longitudinal slot formed in the flat plate;
a formation of tines at one end of the flat plate;
a concave cradle formed at another end of the flat plate defining a dry-club-grip support;
a tee-height gauge formed in the flat plate as a triangular shaped, cut-out aperture;
a cleat wrench formed in the flat plate at a lower side edge

as a pair of tab protuberances and a cleat-accommodating cut-out;
a club groove cleaner formed on said flat plate at an upper side edge as a truncated, wedge-like protuberance; and
the flat plate having a hole at another upper side edge as an attachment device.

4,063,732
BALL BAT
Irvin C. Scott; Evan E. Settle, III, and Robert J. Hickerson, all of Richmond, Va., assignors to Reynolds Metals Company, Richmond, Va.
Filed Aug. 4, 1976, Ser. No. 711,631
Int. Cl.² A63B *59/06*
U.S. Cl. 273—72 A **2 Claims**

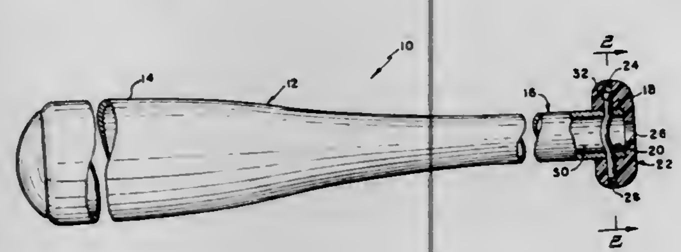

1. A ball bat comprising:
a. a body member which terminates at one end with a hollow handle portion having a pair of aligned holes;
b. a knob fitted to said handle portion and having a pair of aligned holes in aligned relationship with the aligned holes in said handle portion; and
c. a pin which extends through the pair of aligned holes in said knob and the pair of aligned holes in said handle portion and which follows a circuitous path through the hollow of said handle portion, said circuitous path being such that on attempting to move said pin through the pair of aligned holes in said handle portion said pin would tend to bind in the hole in said handle portion toward which the central portion of said pin is forced, while the respective end portions of said pin remain contained by the pair of aligned holes in said knob.

4,063,733
GOLF CLUB
Mark C. Benedict, 158 Moseley Terrace, Glastonbury, Conn. 06033
Filed Aug. 17, 1971, Ser. No. 172,498
Int. Cl.² A63B *53/02*
U.S. Cl. 273—80 C **8 Claims**

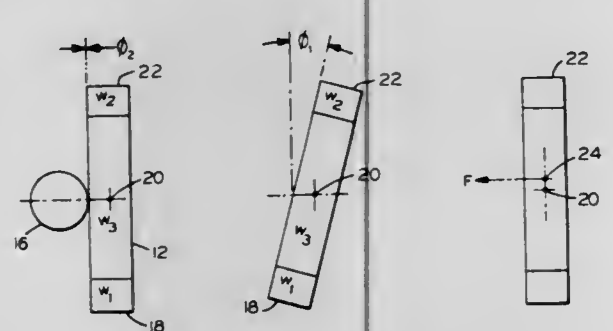

1. A golf club having:
a head having a center of gravity;
a toe portion and a heel portion on said head, said center of gravity being between said toe and said heel; and
a shaft connected to said head, the effective location of connection of said shaft to said head being offset forward of said center of gravity of said head toward said toe and defining the point on said head at which the force generated by a golfer swinging the club in a normal stroke of the club is effectively applied, said offset toward said toe being in an amount such that the force couple created by translational acceleration of the head during the forward part of the stroke of the club is approximately equal to the torque required to overcome and opposite to the rotational inertia of said head to turn the face of said head from an angular position of other than perpendicular to the path of travel of said center of gravity on the backstroke to an angular position at impact substantially perpendicular to the path of travel of said center of gravity.

4,063,734
BOARD GAME APPARATUS
Edward G. Taylor, 100 Oxford Drive, Monroeville, Pa. 15146
Filed Jan. 17, 1977, Ser. No. 759,652
Int. Cl.² A63F *3/00*
U.S. Cl. 273—131 AD **7 Claims**

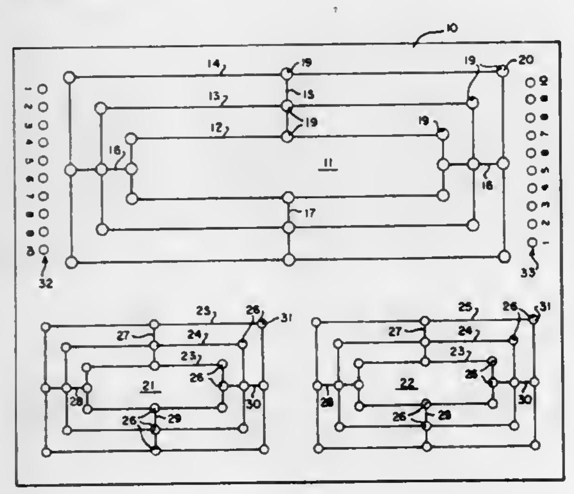

1. A gameboard comprising a flat board surface having thereon a play field having holding means adapted to receiving playing pieces of two colors representing two players, a pair of adjacent record fields in the form of smaller replicas of the play field having holding means adapted to receive record pieces in the form of smaller replicas of the playing pieces to record the completion of a selected series of moves on the play field representing a winning series for a player and a pair of lines of numbered holding means on opposite sides of the board adapted to receive the said record pieces to tally a player's number of winning games.

4,063,735
CB RADIO HIGHWAY BOARD GAME APPARATUS
Dan P. Wendel, 202 Crossroad Court, Hendersonville, Tenn. 37075
Filed Mar. 15, 1976, Ser. No. 666,661
Int. Cl.² A63F *3/00*
U.S. Cl. 273—134 AC **7 Claims**

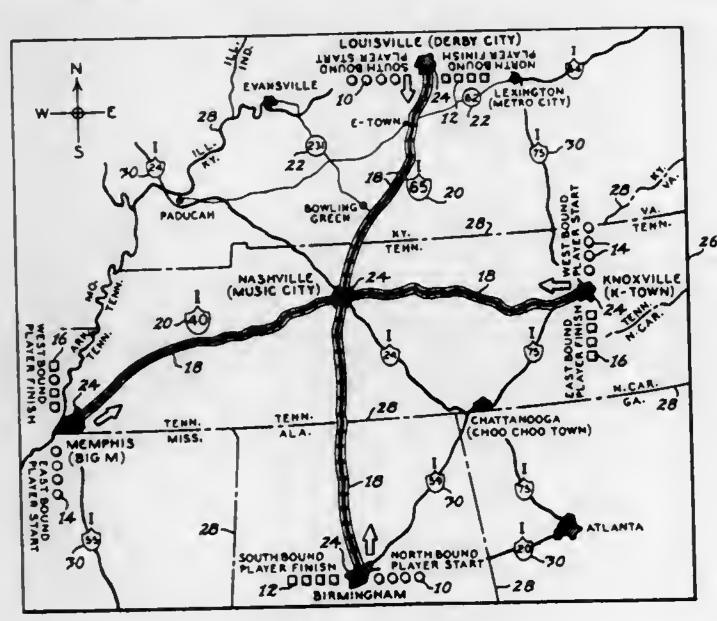

1. A highway game comprising, as components for use in playing same, a map, play pieces representing vehicles adapted to be moved along highways on said map, at least one toy radio, and a chance selector for determining the number of spaces to be moved upon a player's turn.

4,063,736
PUZZLE APPARATUS
Alexander Kennedy Robinson, Windyridge, 40 Nursery Lane, Moortown, Leeds, Yorkshire, England
Continuation-in-part of Ser. No. 583,706, June 4, 1975, abandoned. This application Nov. 17, 1976, Ser. No. 742,695
Int. Cl.² A63F *9/10*
U.S. Cl. 273—157 R **7 Claims**

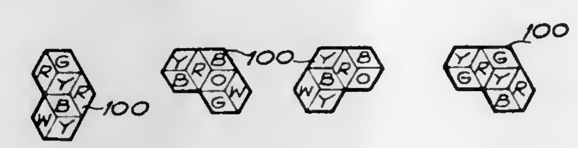

1. Puzzle apparatus comprising a set of 48 or a multiple of 48 pieces, each piece being planar and having a shape, and on at least one face a color pattern, corresponding respectively to the shape and color pattern of seven contiguous rhomboidal cells from a master pattern which in the case of simple rectilinear cells may be constructed by overlapping a first regular hexagonal mesh by three identical hexagonal meshes so as to partition the hexagons of the first mesh into twelve identical rhomboidal cells and in which in the same case three lines or chains of similarly oriented cells intersect at the centre of said hexamgons, neighboring cells in each line having different colors and alternate cells in each line having similar color, each of the three lines of cells presenting a different pair of colors from the other lines, and cells of similar color in parallel lines being in staggered or zigzag relationship one to another, the master pattern in other cases comprising cells derived from the rectilinear cells aforesaid by similarly treating each of the sides thereof, the pieces being arrangeable to provide a continuous planar assembly conforming with the master pattern.

4,063,737
GOLF CLUB
Leung Chong Tom, 12460 Breault St., Pierrefonds, and Jun Kin Wong, 4070 Kent Ave., Montreal, both of Quebec, Canada
Continuation-in-part of Ser. No. 464,116, April 25, 1974, abandoned. This application June 11, 1976, Ser. No. 695,245
Claims priority, application Canada, Apr. 18, 1974, 197897
Int. Cl.² A63B *53/02*
U.S. Cl. 273—174 **5 Claims**

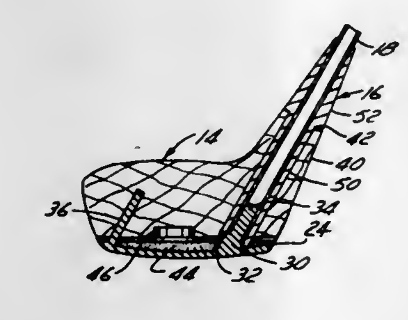

1. A golf club having a high radius of gyration comprising a hollow shaft, a hosel, and a club head;
said club head comprising first and second portions,
said first portion being of a metallic material having a high modulus of elasticity, said first portion forming an integral sole plate and between 30 to 100% of the face area of the club head, said sole plate covering the complete bottom surface of the club head, said sole plate having a first upwardly directed integral member forming an attachment post over which said hollow shaft snugly fits, and a second upwardly directed integral member forming a guiding post in assembly of the club head, said sole plate including a peripherally extending ridge having a height greater than the thickness of the center of the sole plate and being a minor portion of the total height of the club head,
said second portion of said club head being of a non-metallic material having a density substantially less than the density of said first portion such that said second portion forms a minor portion of the weight of the club head, said second portion being secured to said first portion along the peripherally extending ridge and along said guiding post, said second portion being spaced from said first portion in the area of the face plate to form a cavity therebetween, said second portion having an aperture extending through a neck portion thereof, said hosel being adapted to snugly fit within said aperture over said shaft and extend to the sole plate, said first portion and second portion of said club being located with respect to each other so the relative weights and distributions of the first and second portions create a high radius of gyration.

4,063,738
GOLF COURSES
George M. Michalson, 23198 Cedar Point Road, Brook Park, Ohio 44142
Filed Oct. 7, 1975, Ser. No. 620,372
Int. Cl.² A63B *69/36*
U.S. Cl. 273—176 A **10 Claims**

1. A compact golf course, comprising:
a. a single, elongate common fairway;
b. a single common target green disposed proximate one end of said fairway;
c. an array of serially arranged hitting positions located radially from said common target green and spaced peripherally of both the length of said fairway along one side thereof and of the end of the fairway opposite the target green, said array comprising,
i. a first hitting position disposed proximate the opposite end of the fairway from said target green and being the hitting position farthest removed from said target green,
ii. a last hitting position being the hitting position disposed closest to said target green, and
iii. a plurality of additional hitting positions being disposed serially of each other along said fairway intermediate said first and last hitting positions, each of said hitting positions being disposed at a pre-determined distance from said common target green, at least some of said pre-determined distances being distinct from others of said pre-determined distances;
d. means dividing said common fairway into a plurality of zones extending arcuately across the fairway, each said zone being generally concentric with said target green and demarcating a pre-determined range of distance from said target green; and
e. a common putting green disposed adjacent said fairway.

4,063,739

GOLF WARM UP NET

Wally La Rose, 1223 W. H St., Oakdale, Calif. 95361

Filed Jan. 27, 1977, Ser. No. 762,885

Int. Cl.² A63B *69/36*

U.S. Cl. 273—181 F **6 Claims**

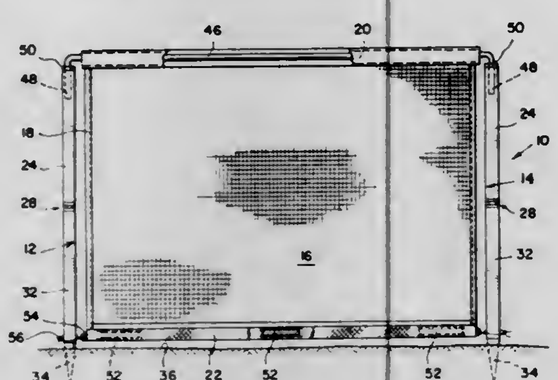

1. A golf practice net comprising:
a pair of tubular posts, each post having a pointed end for insertion into the ground,
a net mounted in a frame,
a sleeve on the top and bottom edges of said net frame,
U-shaped support means within the sleeve connected to the top edge of said net having legs adapted to be received within the top of each of said posts to support said net and frame in a substantial upright manner on said posts, and
a plurality of weights disposed within the bottom sleeve of said net frame for maintaining said net in a substantially upright condition and preventing undue movement of said net when struck with a golf ball.

4,063,740

CAP ATTACHMENT DEVICE FOR GOLF TRAINING

Robert J. Mader, 1218 Arlington Ave., Torrance, Calif. 90501

Filed Dec. 17, 1976, Ser. No. 751,688

Int. Cl.² A63B *69/36*

U.S. Cl. 273—183 B **5 Claims**

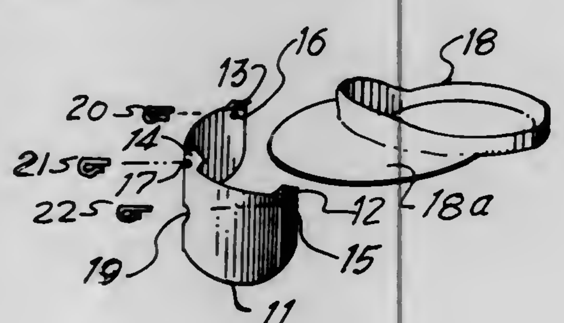

1. A golf training device which attaches to the brim of a cap or the like for use in training a golfer to keep the eyes on the ball throughout the golf swing, comprising:
a thin flexible sheet having a plurality of tabs formed along the top edge, an aperture formed in said sheet directly below each of said tabs, and a peephole aperture formed in said sheet at a position thereon spaced substantially equally from the side edges of said sheet and a predetermined distance from said top edge of said sheet, to provide a peephole through said sheet for the user of said device, and
clip means for removably attaching said device to the brim of said cap, said clip means comprising a clip which is fitted through each of the apertures directly below the tabs and retaining said tabs in abutment against the brim of the cap.

4,063,741

FLUID FACE SEAL ASSEMBLIES

William Kerr, Nelson, England, assignor to J. H. Fenner & Co. Limited, North Humberside, England

Filed Oct. 15, 1975, Ser. No. 622,515

Claims priority, application United Kingdom, Oct. 17, 1974, 44983/74

Int. Cl.² F16J *15/36*

U.S. Cl. 277—37 **10 Claims**

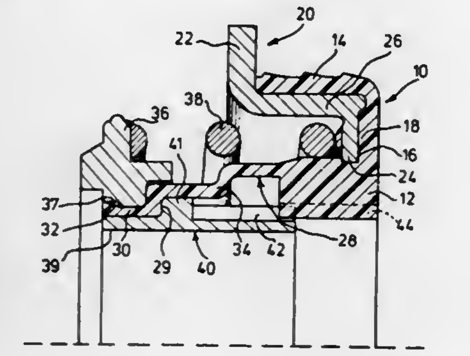

1. A fluid face seal assembly comprising an elastomeric annular seal for engaging in a recess of a stationary housing or the like component, said annular seal having radially inner and outer axially directed limbs which at one end are joined by a radially directed end wall, the said limbs and said end wall co-operating to define an annular recess in said seal, a stiff ring-shaped element seated in said recess and having radially and axially directed portions bearing against corresponding regions of said annular seal to reinforce said seal, an axially directed extension on the radially inner limb of said annular seal, a step constituting a carrier member at the end of said extension remote from said limb, said step having a thickend free end, an annular face seal directly engaging said carrier member and retained by said thickend end in abutment against the shoulder between said step and the remainder of said extension, a retainer supporting at least said step and the adjoining part of said extension, said retainer acting to compress said thickened end between itself and a radially adjacent part of said face seal thereby mechanically to lock said face seal onto said carrier member, means for preventing relative rotation between said face seal and said annular seal, and spring means acting between said face seal and said annular seal to maintain a resilient relationship between the two.

4,063,742

ABRADABLE FLUID SEAL FOR AIRCRAFT GAS TURBINES

Shelton Watkins, Jr., Louisville, Ky., assignor to Kentucky Metals, Inc., New Albany, Ind.

Filed Aug. 18, 1976, Ser. No. 715,628

Int. Cl.² F16J *15/32*

U.S. Cl. 277—53 **9 Claims**

1. An abradable fluid seal for use in the space between two relatively movable members, such as the circular space between the cylindrical path of the rotating blade tips in an aircraft gas turbine and the surrounding bore wall of the stationary casing of the turbine wherein the seal has a circular length, a radial thickness, and an axial width, comprising:
A. a series of thin narrow elongate metal strips assembled in side-by-side or face-to-face relationship to form a flexible assembly composed of odd numbered alternate strips and even numbered interposed strips, said assembly having, in the direction of its thickness, an outer base portion and an inner seal portion, and, over a given length, one succession of undulations in its outer base portion and another succession of corresponding undulations in its inner seal portion,
1. the undulations in the base portion being three-sided semi-hexagonal figures, each having, between two slanted sides, a flattened crest which is bonded to the corresponding crest of a semi-hexagonal figure in an immediately adjacent strip so that said figures cooperate to form an integral honeycomb, the voids of which extend in the direction of the assembly's thickness dimension,
2. each undulation in the seal portion of each strip being axially aligned with a corresponding undulation in an adjacent strip and spaced therefrom so that immediately adjacent strips cooperate with each other to form therebetween a free undulating passageway, extending lengthwise of the assembly's seal portion,
a. each alternate strip has its corresponding seal and base portion undulations point in the same direction, and
b. each interposed strip has its corresponding seal and base portion undulations point in opposite directions.

4,063,743

SEALING ARRANGEMENT FOR A ROTATABLE MEMBER

Andrew J. Petros, Oakdale, Pa., assignor to Mesta Machine Company, Pittsburgh, Pa.

Filed June 14, 1976, Ser. No. 696,123

Int. Cl.² F16J *15/32*

U.S. Cl. 277—63 **6 Claims**

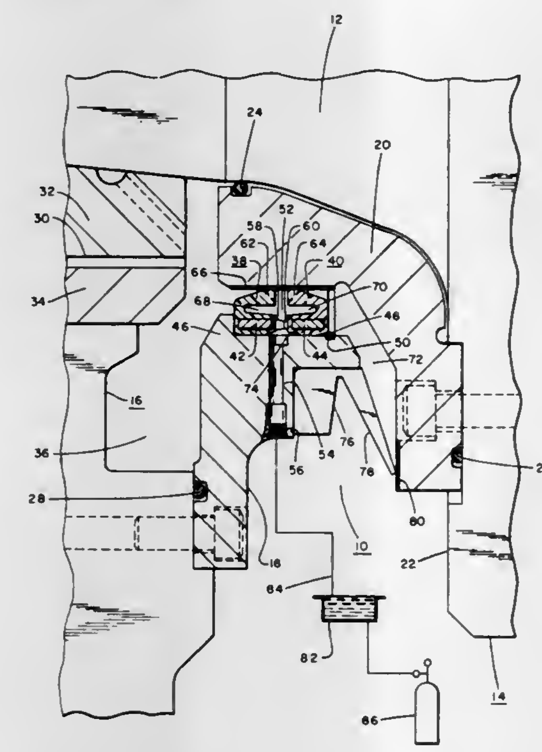

1. A sealing arrangement for sealing a stationary member to a rotatable member, said arrangement comprising a stationary member and a rotatable member, a pair of rubbing seals mounted on one of said rotatable and said stationary members in rubbing engagement with a cylindrical surface of the other of said members, said rubbing seals being relatively closely spaced to form a sealant space therebetween extending radially from said rotatable member to said stationary member and circumferentially and continuously about said rotatable member, said stationary member having a sealant passage extending therethrough in communication with said sealant space, means for injecting fluid sealant through said passage and into said sealant space so that said sealant space is completely filled with said sealant to form a continuous sealing band of said sealant extending circumferentially about said rotatable member, and said sealant space including opposed and laterally extending channel means communicating therewith and extending behind opposed rubbing lips of said rubbing seals respectively to increase the flexibility thereof and to positively engage said lips with said other member and wherein said rubbing seals are symmetrically opposed with respect to one another; and including said rotatable member configured as a roll neck and wearing ring mounted thereon, and further including, said stationary member configured as a bearing chock for said roll neck.

4,063,744

COLLAPSIBLE CAMP PACK AND GAME CARRIER

Charles D. Fraser, 13121 W. Florida Drive, Lakewood, Colo. 80228

Filed June 15, 1976, Ser. No. 696,392

Int. Cl.² B62B *1/12*

U.S. Cl. 280—42 **9 Claims**

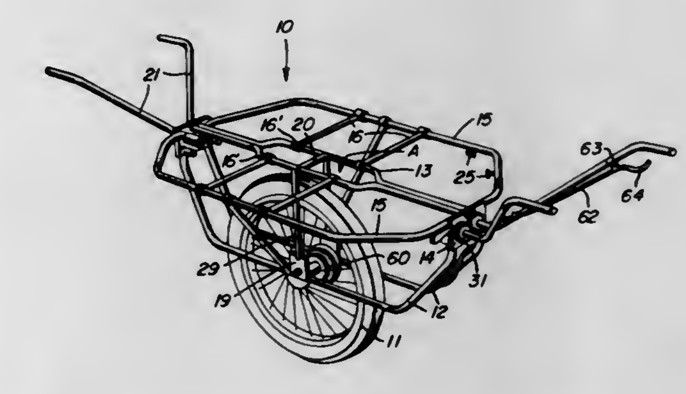

6. A collapsible camp pack and game carrier, said carrier including a narrow elongated longitudinal frame, provided with dependingly supported wheel support structure centrally intermediate the opposite ends of said frame from whose lower portion a large diameter ground engageable wheel is journalled for rotation about a horizontal transverse axis, mounting means on at least one end of said frame, a pair of elongated handlebars for each mounting means, said handlebars each including relatively laterally offset opposite end portions, support means rotatably supporting one pair of corresponding end portions of said handlebars from said mounting means for independent angular displacement relative to the latter about axes extending longitudinally of said frame and thus orbital displacement of the other pair of handlebar end portions about said axes, said other pair of handlebar end portions defining elongated handgrips extending longitudinally of said frame, and releasable means operative to lock said handlebars in and against angular displacement out of adjusted positions relative to said frame, the axes of angular displacement of said handlebars relative to said main frame being closely spaced apart transversely of the latter.

4,063,745

TRAILER FOR FARM MACHINERY

LeRoy C. Olson, Box 707, LaMoure, N. Dak. 58458

Filed Oct. 14, 1975, Ser. No. 622,055

Int. Cl.² B62D *21/18*

U.S. Cl. 280—43.23 **2 Claims**

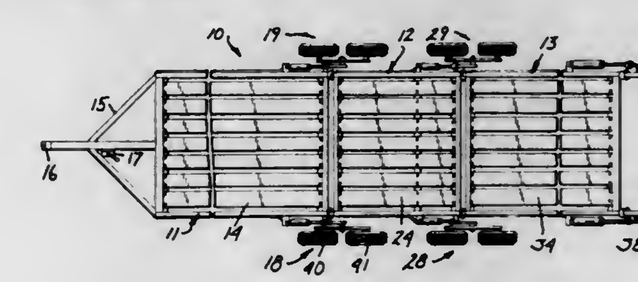

1. In a trailer, in combination:
a flat bed;
transverse pivot means extending outwardly from the side of said bed;
crank arms carried at first ends by said pivot means for pivotal movement between first positions, in which said arms extend at a right angle to said bed, and second positions, in which said arms lie along said bed without projecting materially above or below it;
further means removably mounting wheels on said crank

arms, for movement therewith about said pivot means through a range having a vertical component at least as great as the normal height of said bed above the ground, said further means including beams centrally pivoted to the crank arm, and axle means carried by said beams and oppositely spaced from the central pivot for supporting a plurality of wheels for tandem operation;
and hydraulic motor means connected to said bed and said crank arms for causing the pivotal movement of said crank arms between said first position, in which said bed rests on the ground and said wheels are out of contact with the ground, and said second position, in which said wheels engage the ground, and said bed is at a desired height above the ground,
wherein said further means includes a readily releasable connection for facilitating beam and wheel removal when said crank arms are in said first position.

4,063,746
SLEDGE
Odd Hansen, Fredrikstad, Norway, assignor to Plast & Form A/S, Fredrikstad, Norway
Filed June 2, 1976, Ser. No. 692,224
Claims priority, application Norway, June 5, 1975, 751988
Int. Cl.^{2} B62B *13/12*
U.S. Cl. 280—16 **6 Claims**

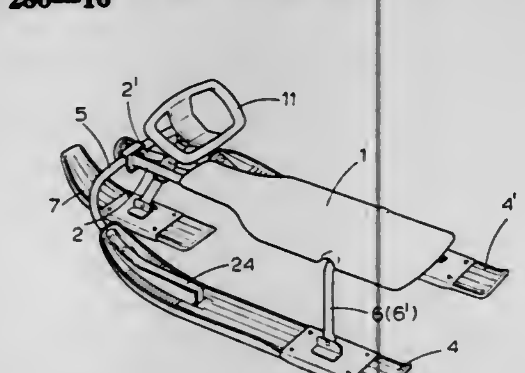

1. A sledge comprising:
a seat assembly;
a pair of main runners;
a substantially U-shaped member including a pair of legs joined by a base;
each of said legs of said U-shaped member being joined to the forward end of a respective one of said main runners and extending therefrom in a forwardly and upwardly curved direction;
said base of said U-shaped member being pivotally connected to said seat assembly about a single axis positioned centrally of said base and extending longitudinally of said main runners;
a steering runner assembly including a steering runner attached to a steering column, said steering column being rotatably mounted on a forward portion of said seat assembly; and
stay means for connecting a rear portion of said seat assembly to rear portions of said main runners, said stay means being pivoted to said seat portion and to each of said main runners about axes extending transversely of said main runners.

4,063,747
NOISELESS RATCHET DRIVE MECHANISM FOR THE BICYCLE AND THE LIKE
Timothy Tung Jen Young, 788 Walnut 2, San Carlos, Calif. 94070
Filed Nov. 3, 1975, Ser. No. 628,074
Int. Cl.^{2} B62M *1/04*
U.S. Cl. 280—255 **2 Claims**

1. In an occupant propelled vehicle including a frame, a ground engaging wheel mounted on said frame, a driven sprocket for rotating said wheel, a drive sprocket, and an endless sprocket chain trained over said drive and driven sprockets, the improvement comprising: a ratchet drive mechanism for driving said drive sprocket, said mechanism comprising a drive shaft freely journaled concentric to said drive sprocket, a first lever arm fixed to one end of said shaft, a second lever arm freely rotatable on the other end of said shaft, a first inner member, having an outer periphery, fixed to said shaft on one side of said drive sprocket adjacent said one end, a second inner member, having an outer periphery, fixed to said second lever arm on the other side of said drive sprocket, a first band shell fixed to said one side of said drive sprocket, said first band shell having an inner surface complementing said outer periphery of said first inner member, a second band shell fixed to said other side of said drive sprocket, said second band shell having an inner surface complementing said outer surface of said second inner member, said periphery of each

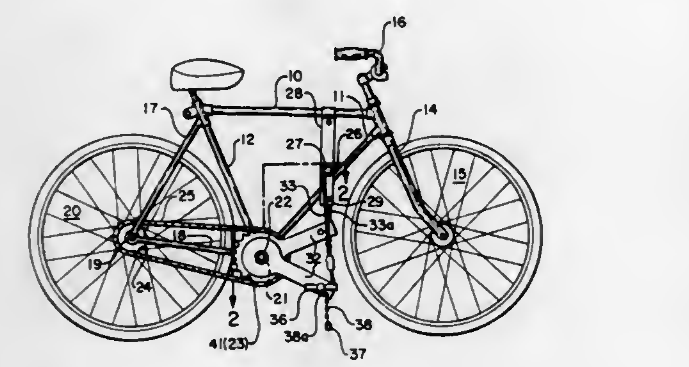

inner member including a plurality of spaced, tapered, slots, a plurality of rollers mounted in each slot, a shoe positioned in each slot between said rollers and said inner surface of said band shell, a spring in each slot for urging said rollers into a position wedging said shoe into frictional engagement with said inner surface, an attachment shaft journaled on said frame, a first cable means having one end attached to the tip of one of said lever arms and the other end wound clockwise on said attachment shaft, and a second cable means having one end attached to the tip of the other of said lever arms, and the other end wound counterclockwise on said attachment shaft, a turnbuckle with right-and-left threaded screws fitted to each of said cable means whereby the cable length may be adjusted and a compression spring mounted on said turn-buckle for moving into stopping engagement with said attachment shaft to limit the travel of said cable means.

4,063,748
HITCH FOR GANGING LAWN MOWERS
Richard H. Schmidt, R.R. 2, Box 63, Davenport, Iowa 52802
Filed Sept. 22, 1976, Ser. No. 725,397
Int. Cl.^{2} B60D *1/14*
U.S. Cl. 280—411 C **4 Claims**

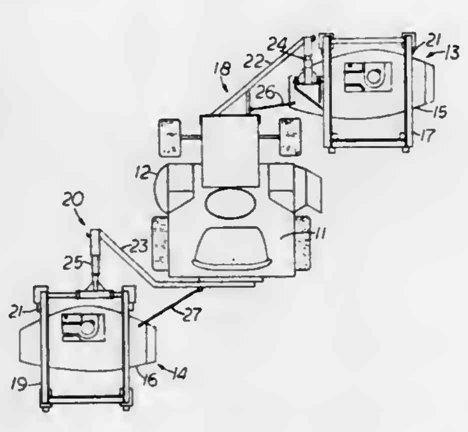

1. A hitch assembly for ganging a plurality of lawn-care implemental assemblies, a tractive vehicle having a fore-to-aft direction and movable along a supporting surface, at least one of said lawn-care implemental assemblies being attached to said tractive vehicle, an implemental mounting frame assembly to which at least another of said lawn-care implemental assemblies is attached, said implemental mounting frame assembly having a plurality of caster wheels and a front end to which said hitch assembly is to be attached, said hitch assembly comprising:
a side extension draft bar having a transverse portion and a forwardly extending portion, coupling means secured to said transverse portion for coupling said side extension draft bar rigidly to said tractive vehicle, said forwardly extending portion positioning one end of said side extension draft bar ahead of said coupling means at one side of said tractive vehicle,
an implemental tongue restained to be in a plane perpendicular to the surface supporting said tractive vehicle and parallel to the fore-to-aft direction of said tractive vehicle, said implemental tongue having a forward end to be connected to said tractive vehicle and a rear end to be connected to said implemental mounting frame assembly,
first pivotal means connecting the forward end of said implemental tongue to said one end of said side extension draft bar, said first pivotal means permitting said implemental tongue to rotate only about an axis parallel to the surface that supports said tractive vehicle and perpendicular to the fore-to-aft direction of said tractive vehicle, the length of said implemental tongue and the amount of rotation thereof being sufficient to permit said implemental mounting frame assembly to follow a steep bank beside said tractive vehicle, and
second pivotal means connected between the rear end of said implemental tongue and the front end of said implemental mounting frame assembly, said second pivotal means permitting said implemental mounting frame assembly to rotate only about the longitudinal axis of said implemental tongue, and about an axis parallel to the surface supporting said implemental mounting frame assembly and perpendicular to the longitudinal axis of said implemental tongue.

4,063,749
CENTER POINT TRAILER HITCH
Gordon A. Tracy, P.O. Box 326, Ramona, Calif. 92065, and David L. Forrest, 1631 Harbison Canyon Road, El Cajon, Calif. 92021
Filed July 16, 1976, Ser. No. 705,930
Int. Cl.^{2} B62D *53/04*
U.S. Cl. 280—423 R **2 Claims**

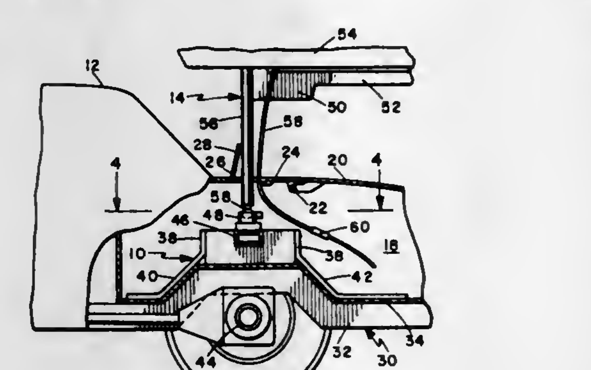

1. A trailer hitch assembly for releasable connection of a towing vehicle having an underbody, a luggage compartment with a deck lid, an upper back panel to which the deck lid is hinged and a rear axle, with a trailer having an elevated forwardly extending portion, said hitch comprising:
a.
1. a sub-assembly in a towing vehicle and including a support rigidly secured to the top of a portion of the underbody of the vehicle within the luggage compartment, vertically beneath the upper back panel and vertically above the rear axle of the towing vehicle, said upper back panel having a centrally disposed opening therein;
2. a pivot connector member mounted on said support;
b.
1. a sub-assembly rigidly mounted on an elevated forwardly extending portion of a trailer and including a rigid depending pillar extending, in use, through said opening;
2. a second pivot connector member on the lower end of said depending pillar for releasable connection with the first mentioned connector member said pillar and sub-assemblies being proportioned to permit opening of said deck lid to give access for effecting said releasable connection;
c.
1. a closure member for said opening when said depending pillar is removed, as in the disconnection of the trailer, said closure member when closed restoring the integrity and the aesthetic appearance of the upper back panel.

4,063,750
COMBINATION TOWBAR AND PARKING STAND
Paul Mutchler, University City, Mo., assignor to American Air Filter Company, Inc., Louisville, Ky.
Filed Sept. 7, 1976, Ser. No. 721,061
Int. Cl.^{2} B60D *1/14*
U.S. Cl. 280—475 **9 Claims**

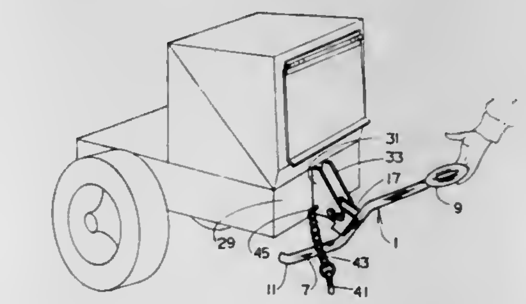

1. A towing assembly comprising: a towbar including a member having an intermediate elongated section with opposed first and second end sections; said first end section being an elongated member extending angularly from said intermediate section in a forward direction with means thereon to connect with a towing means; said second section being an elongated member extending angularly from said intermediate section in a rearward direction and terminating in a stand means; and, releasable attaching means attached to said towbar to releasably attach said towbar to a positioning means having a plurality of attaching positions, said positioning means being fixedly attached to an apparatus to be towed and pivotally mounted to said towbar attaching means.

4,063,751
SKI BRAKE
Georges Pierre Joseph Salomon, Annecy, France, assignor to S.A. Ets Francois Salomon & Fils, Annecy, France
Filed Mar. 24, 1976, Ser. No. 670,007
Claims priority, application France, Mar. 28, 1975, 75.09988
Int. Cl.^{2} A63C *7/10*
U.S. Cl. 280—605 **9 Claims**

1. Ski brake apparatus adapted for being mounted on the upper surface of a ski, said apparatus comprising a step-on pedal pivotably mounted on the ski and having a raised inoperative position and a lowered operative position, elastic means acting on said step-on pedal urging said pedal to raised inoperative position, said pedal being lowered against the opposition of said elastic means by application of a boot on said pedal, a stop arm comprising a brake lever pivotably mounted on said ski for movement between a raised inactive position and a lowered active position, said blade projecting below the ski in said active position, connection means between said step-on pedal and said blade for urging said blade to active position

when the step-on pedal is moved to its raised inoperative position by said elastic means and for being disconnected from said blade when the step-on pedal is lowered whereby said elastic

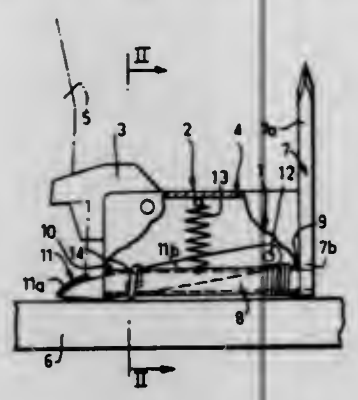

means has no influence on said blade, and an elastic member of lower strength as compared to said elastic means connected to said blade to urge the blade to raised inactive position when the step-on pedal is lowered to operative position.

4,063,752
SKI BINDING HAVING PRESENT MEANS AND DETENT TRIGGER FOR SAID PRESENT MEANS
Richard A. Whitaker, 719 W. 7th, and David H. Stuart, 3005 W. 27th Ave., both of Amarillo, Tex. 79109
Filed Apr. 16, 1976, Ser. No. 677,787
Int. Cl.² A63C *9/08*
U.S. Cl. 280—624 **15 Claims**

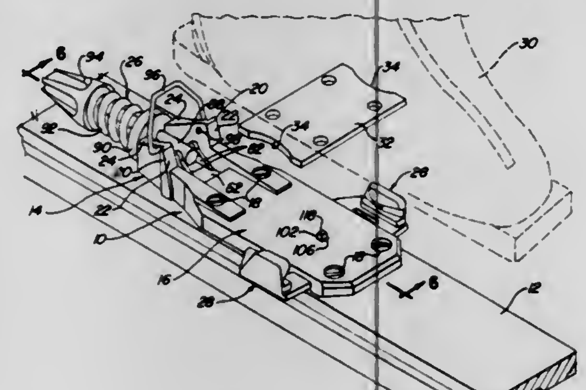

1. A ski binding adapted to releasably secure a ski to an associated ski boot comprising:
a first binding component in the form of a substantially rigid latch receiving member provided with at least one latch receiver formation;
and a second binding component in the form of a substantially rigid latch mounting body;
one of said components being constructed for permanent connection to a ski boot and the other component being constructed for permanent connection to a ski;
latch means movably mounted on the body for movement between inoperative position substantially free of the latch receiving member and operative position in latching engagement with the receiver formation;
a resilient force unit carried by the body and adjustable between a no-load condition and a loading condition;
link means connecting the force unit to the latch means and movable to transmit the force of the force unit to the latch means to yieldingly urge the latter into operative position;
and a detent trigger mounted on the body and movable between a first interfering position engaging the link means to restrain it against movement in the latching direction in response to the urging of the force unit in loading condition and a second non-interfering position;
the trigger being settable in the first position to restrain the link means against latching movement and being actuatable by a skier upon placing his boot in skiing position on the ski to move to the second position and release the link means to allow it to move and transmit the force of the force unit to the latching means and yieldingly urge it into latching engagement with the receiver formation.

4,063,753
RUNAWAY BINDING DEVICE FOR A SKI
Raymond L. Cordeiro, 22343 S. Garden Ave. No. 1, Hayward, Calif. 94541
Filed Mar. 22, 1976, Ser. No. 669,231
Int. Cl.² A63C *9/00*
U.S. Cl. 280—637 **9 Claims**

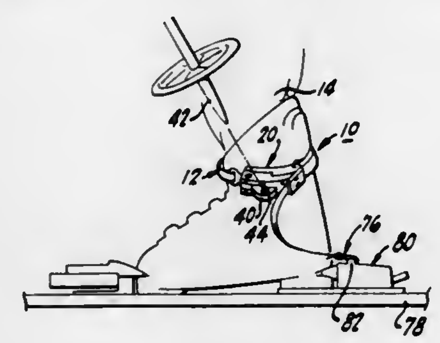

1. A runaway binding device for a ski comprising:
a. strap means for partially surrounding the leg of the user, said strap means having a first end portion and a second end portion;
b. latch means for securing said first and second end portions of said strap means together, said latch means including a housing having a slot open to the exterior of said housing and a tongue passing into and out of said housing slot along substantially the same path of travel, said tongue having an opening therethrough and being connected to said first end portion of said strap means, said latch means also including an ear pivotally mounted at one edge thereof on said housing and having an accessible portion extending outwardly from said housing, said ear including a catch fitting within said tongue opening to retain said tongue within said housing slot, pivotal movement of said ear outwardly from said housing releasing said catch retaining said tongue, said latch means further including spring means for biasing said pivoting catch into said tongue opening, said catch and said tongue cooperable to permit retaining of said tongue by said catch along said path of travel, said latch means and strap means substantially surrounding the leg of the user; and
c. connecting means for holding said strap means to the ski.

4,063,754
PROCESS FOR THE PRODUCTION OF PRESSURE SENSITIVE CARBONLESS RECORD SHEETS USING NOVEL HOT MELT SYSTEMS AND PRODUCTS THEREOF
Dale Richard Shackle, and Ainslie Thomas Young, Jr., both of Chillicothe, Ohio, assignors to The Mead Corporation, Dayton, Ohio
Filed May 7, 1976, Ser. No. 684,463
Int. Cl.² B41L *1/36*
U.S. Cl. 282—27.5 **12 Claims**

1. A process for producing a pressure-sensitive carbonless record sheet comprising the steps of:
a. preparing a hot melt coating composition, said hot melt coating composition being non-aqueous and solvent-free, said hot melt coating composition additionally being water insoluble and having a melting point of from about 60° C to about 140° C, said hot melt coating composition, including a chromogenic material, said chromogenic material being a meltable color developer of the acidic electron accepting type;
b. heating said hot melt coating composition to a temperature above the melting point of said hot melt coating composition;
c. applying said heated coating composition to a substrate, said coating composition being applied at a coat weight of from about 0.2 pounds to about 8.0 pounds per 3300 square feet of subsrate; and
d. setting said coating composition by cooling said coated substrate, said set coating composition being free from any liquid.

4,063,755
COMPENSATORS OR EXPANSION JOINTS
Gunther Merz, Buchenring 6, 6078 Zeppelinheim, Germany
Filed Sept. 2, 1975, Ser. No. 609,664
Claims priority, application Germany, Sept. 20, 1974, 2445055
Int. Cl.² F16L *11/12*
U.S. Cl. 285—53 **7 Claims**

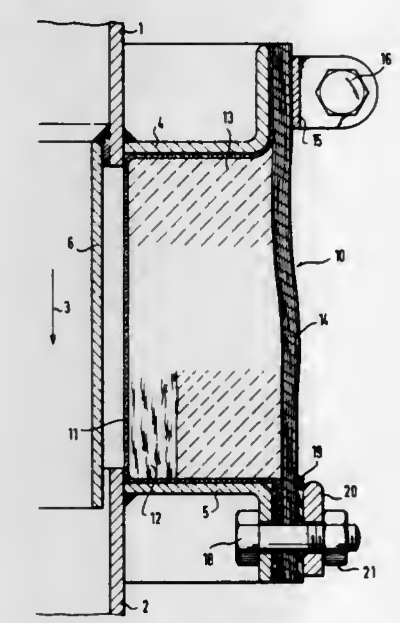

1. A compensator of pliable materials arranged in a laminar fashion for establishing a flexible joint between sections ofa pipe, comprising:
a sealing layer of a fluid-impervious material having a limited thermal stability;
a flexible layer of fabric material positioned adjacent to and on each side of said sealing layer; and
a non-load-bearing layer of flexible, metallic foil positioned adjacent to said sealing and said flexible layers, said layer of flexible, metallic foil being disposed relative to said sealng and said flexible layers so as to protect said layers against a source of thermal and/or chemical stress.

4,063,756
SELF-LOCKING CONNECTOR
Franklin T. Anderson, Bernardsville, N.J., assignor to Co-Operative Industries, Inc., Chester, N.J.
Continuation-in-part of Ser. No. 473,432, May 28, 1974, Pat. No. 3,920,269. This application Sept. 3, 1975, Ser. No. 610,000
Claims priority, application Canada, Apr. 11, 1975, 224580; United Kingdom, Apr. 16, 1975, 15684/75
The portion of the term of this patent subsequent to Nov. 18, 1992, has been disclaimed.
Int. Cl.² F16L *15/00*
U.S. Cl. 285—84 **9 Claims**

1. A self-locking connector, comprising:
a coupling member;
said member having an axis, and being threaded along an axially-extending surface thereof for threaded engagement with a mating coupling element;
a body member;
said coupling and body members being engaged for relative rotation therebetween;
said coupling and body members having first means cooperative for preventing axial movement, between said coupling and body members, in a first direction relative to said axis; and
second means engaged with both said coupling and body members for preventing axial movement between said coupling and body members in a second direction relative to said axis; and wherein

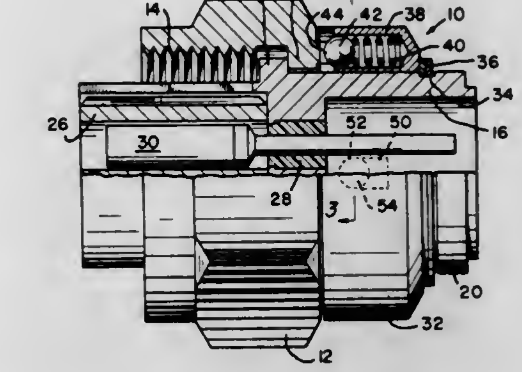

said second means further includes means operative for resiliently restraining said coupling and body members against relative rotation, with a substantially unvariable, resilient force, upon said coupling member being rotatively threaded with and unthreaded from a mating coupling element.

4,063,757
FITTING FOR CONDUITS WITH CORRUGATED TUBES AND HOSES
Siegfried Führmann, Gleidingen, Germany, assignor to Kabel- und Metallwerke Gutehoffnungshutte AG, Hannover, Germany
Filed Sept. 1, 1976, Ser. No. 719,363
Claims priority, application Germany, Sept. 12, 1975, 2541242
Int. Cl.² F16L *39/02*
U.S. Cl. 285—149 **7 Claims**

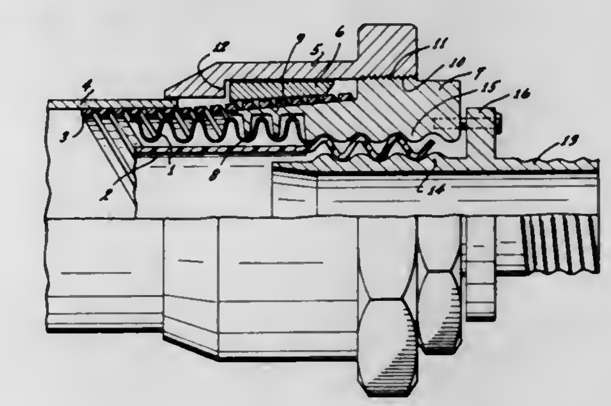

1. A fitting for connection to a conduit having a corrugated outer tube and an inner elastic hose, an end portion of the outer tube having been cut for exposing the hose, comprising:
a flange part having internal grooves and ridges defining a corrugation pattern for engaging corrugations of the outer tube from the outside, said flange part having additionally an inner threading with smooth corrugation ridges and being axially displaced from said grooves and ridges for engagement of the inner hose where exposed; and
a sleeve having smooth-surface thread ways substantially matching the inner threading of the flange part, but being of smaller diameter for being threadedly inserted in said flange part and said hose for clamping the hose against the inner threading while the hose conforms to the contour of the sleeve threading and of the inner threading of the flange part, in that ridges of either threading urge the hose into opposite grooves of the respective other threading.

4,063,758
COUPLING FOR PIPES
Alvar Torsten Westberg, Sandviken, Sweden, assignor to Sandvik Aktiebolag, Sandviken, Sweden
Continuation of Ser. No. 587,617, June 17, 1975, abandoned. This application Jan. 4, 1977, Ser. No. 756,795
Claims priority, application United Kingdom, May 13, 1975, 20203/75
Int. Cl.² F16L *23/00*
U.S. Cl. 285—177 **1 Claim**

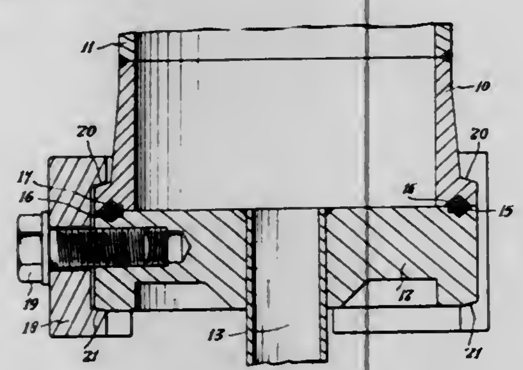

1. A pipe joint for connecting pipe ends having large differences in diameters, being used in a plant with limited lateral space, as connected between a large furnace pipe and a substantially smaller pipe, each pipe end having radially extending flange, the two said flanges having opposed mating surfaces which form between them an annular channel; and a sealing ring disposed in said channel, the flanges being clamped together at their periphery exteriorly of the pipes by clamping means connected to one of the flanges by holding means extending substantially radially inwardly towards the axis of the pipe joint, that flange to which is connected the clamping means being a reducing flange which accommodates a smaller pipe than does the opposed flange, said clamping means comprising a plurality of circumferentially spaced clamps presenting toward said flanges U-shaped profiles with inclined surfaces and said flanges presenting correspondingly inclined surfaces toward said clamps, said holding means comprising a screw for each clamp which is threaded into said one flange, whereby said holding means exerts a wedging action on said clamps forcing said flanges together.

4,063,759
WATER BARRIER TO PREVENT SEEPAGE PAST PIPES INSTALLED THROUGH A MASONRY WALL
Wayne D. Steimle, 8808 Las Tunas Drive, San Gabriel, Calif. 91776
Filed May 7, 1976, Ser. No. 684,273
Int. Cl.² F16L *5/02*
U.S. Cl. 285—189 **4 Claims**

1. A water barrier device for preventing seepage of water along the interface between the exterior of a pipe and a masonry wall in which a portion of the pipe length is permanently and immovably embedded, said barrier device comprising a rigid molded plastic tubular sleeve adapted to be telescoped onto and bonded to the outer surface of the portion of a pipe embraced by and in sealing contact with a waterproof coating for said masonry wall and through which coating said pipe passes, and said sleeve having wide area sealing flange means embracing and projecting outwardly therefrom adapted to be embedded in and sealed to waterproof coating for one face of said masonry wall when installed therein and cooperable ther-

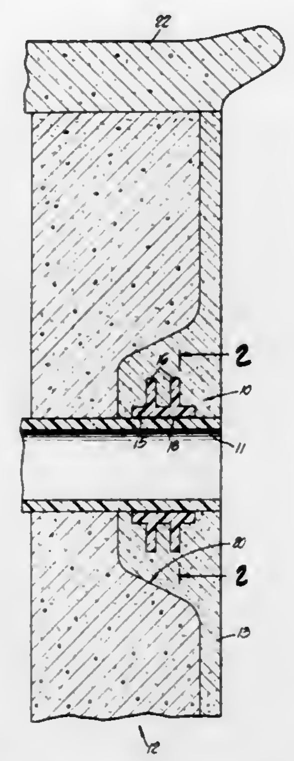

with to prevent liquid seepage through the wall along the exterior of the pipe.

4,063,760
QUICK CONNECT COUPLING
Luis Moreiras, Twinsburg, Ohio, assignor to The Weatherhead Company, Cleveland, Ohio
Filed Oct. 27, 1976, Ser. No. 735,949
Int. Cl.² F16L *33/18*
U.S. Cl. 285—242 **8 Claims**

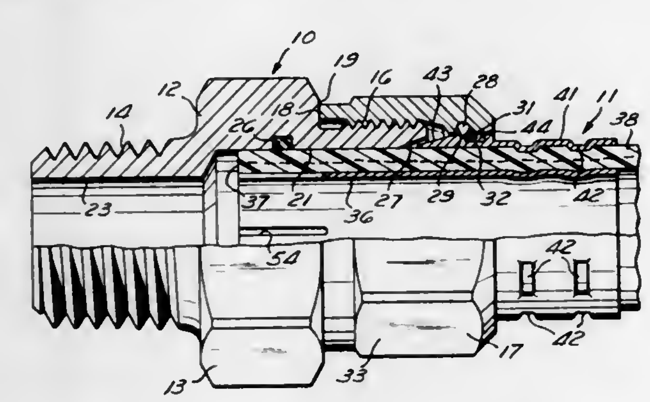

1. A quick connect tube coupling comprising a tubular body assembly, a flexible tube formed of plastic or elastomeric material having interior and exterior cylindrical surfaces and an end portion terminating at an end face, a metallic tubular insert extending into said tube from said end face and supporting said interior surface of said tube, a tubular sleeve around said exterior surface of said tube spaced axially from said end face, said exterior surface of said tube being a substantially smooth continuous uninterrupted surface extending axially rearwardly from said end face beyond said tubular sleeve, said tubular sleeve including gripping surface means extending radially inwardly into said exterior surface of said tube, said gripping surface means cooperating with said insert to grip said tube and lock said sleeve against movement relative to said tube, said sleeve being formed with a forward camming surface and a peripheral groove, said peripheral groove being disposed between said camming surface and said gripping surface means, said body assembly providing a forward portion proportioned to closely fit said end portion of said tube between said end face and said sleeve and a rearward portion proportioned to receive said camming surface and peripheral groove, a resilient seal operable to engage and seal with said exterior surface of

said tube, said rearward portion being provided with an interior annular groove, an expandable lock ring loosely positioned in said interior groove, said camming surface being disposed between said lock ring and said forward portion and expanding said lock ring into said interior groove as said tube is inserted into said body assembly until said peripheral groove is within said lock ring and said tube engages and is sealed by said seal, said lock ring bridging between said peripheral grooves and said interior groove and preventing relative axial movement between said tube and said body assembly.

4,063,761
MINIMUM FRICTION SWIVEL FOR SWIMMING POOL CLEANERS
Andrew L. Pansini, 180 Los Cerros Drive, Greenbrae, Calif. 94904
Continuation-in-part of Ser. No. 699,304, June 24, 1976. This application Aug. 23, 1976, Ser. No. 716,756
Int. Cl.² F16L *27/00*
U.S. Cl. 285—275 **6 Claims**

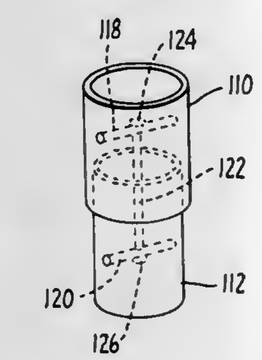

1. In an automatic pool cleaner having a carrier, water conduit means connected thereto having first and second loosely interfitting concentric conduit sections, and swivel means interconnecting said first and second sections whereby said sections are freely rotatable at all times relative to each other: an improved swivel means comprising a first rod member extending diametrically of said first section and fixedly attached thereto, a second rod member extending diametrically of said second section and fixedly attached thereto, a third rod member extending axially of said sections and loosely through said first and second rod members, centrally thereof, and means connecting said third rod member to said first and second rod member to swivelly support said second conduit section with respect to said first conduit section, said last-mentioned means comprising enlarged end members carried by said third rod member permanently disposed in free rotational, non-clamping, surface-bearing engagement with said first and second rod members.

4,063,762
CANOPY FOR PICKUP TRUCKS
Allan R. Williams, 6750 - 15th Northwest, Seattle, Wash. 98117
Filed Aug. 2, 1976, Ser. No. 710,587
Int. Cl.² B60P *3/34*
U.S. Cl. 290—23 R **8 Claims**

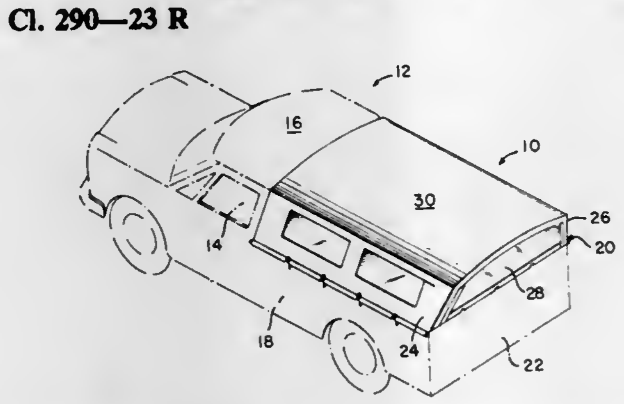

1. A canopy for covering the bed of a pickup truck, comprising:

a rigid, planar roof support having a shape corresponding to the shape of said bed;

a plurality of rigid, elongated side supports having one end of said of said side supports removably secured to said truck along the sides of said bed, and the other end thereof pivotally secured to said roof support at opposite sides thereof such that said side supports may be folded inwardly against the lower surfaces of said roof support for compact storage; and

an integral, flexible shell having a top corresponding to the shape of said roof support, and a pair of sidewalls having a height approximately equal to the height of said side supports and a length approximately equal to the length of said roof support, said canopy further including means for securing the lower edges of said shell to said truck such that said shell is snugly positioned over said roof and side supports.

4,063,763
DOOR OR WINDOW CLOSURE
Frederik Cornelis van Herpen, 90, Stationsweg, Barendrecht, Netherlands
Filed May 13, 1976, Ser. No. 685,982
Claims priority, application Netherlands, May 21, 1975, 7505995
Int. Cl.² E05C *1/06*
U.S. Cl. 292—39 **8 Claims**

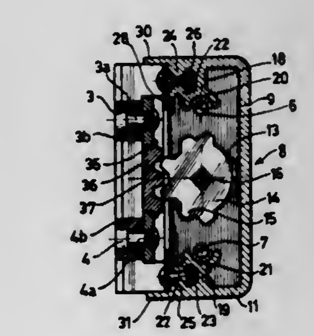

1. A door or window closure comprising:

a one piece housing suitable for attachment to the door or window, said housing comprising a section of predetermined width of a generally U-shaped extrusion having a base wall with side walls extending therefrom at either end, concave guide means within said housing and opening toward the interior of said housing for guiding fastener means extending through said housing, one such guide means being mounted on an intermediate portion of the inner surface of each of said side walls by a bridge member which spacedly positions said guide means from said side wall, a first ridge on the inner surface of each of said side walls adjacent the free end thereof, each of said guide means having a second ridge positioned in opposition to one of said first ridges for forming a narrow opening to a larger space defined by said first and second ridges and said bridge member, said guide means, bridge members, and first and second ridges extending across the width of said housing;

a pinion rotatably journalled in said base wall of said housing, said pinion being coupled to an operating member for said closure;

a closing plate extending across the open end of said U-shaped section and joined to said housing by fasteners extending through said narrow openings between said first and second ridges, said closure plate having an opening in the central portion thereof; and

a slide member slideably retained on the exterior of said closing plate for movement in a plane parallel to said base wall, said slide member having at least one locking member projecting therefrom, said slide member having a rack extending through the opening in said closing plate into the interior of said housing and into engagement with said

pinion for providing movement to said slide member upon rotation of said pinion.

4,063,764
FOOT OPERATED LATCH FOR HOPPER CARS
Franklin P. Adler, Michigan City, Ind., assignor to Pullman Incorporated, Chicago, Ill.
Filed July 15, 1976, Ser. No. 705,841
Int. Cl.² E05C *3/04*
U.S. Cl. 292—256.5 **14 Claims**

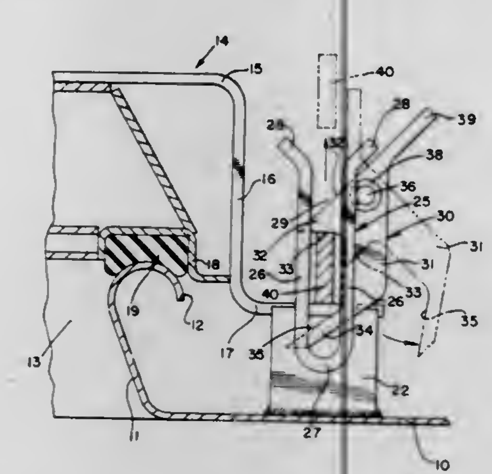

1. In a hopper car having a hatch access opening;
a hatch cover movably supported on said car for opening and closing said access opening,
a latch strap on said cover having a latching portion projecting laterally to one side of said opening, the improvement comprising a latch mechanism including:
a latch support bracket mounted on said hopper car,
a latch arm hinged to said support for swinging movement about a generally horizontal axis over and off said latching portion when the latter is positioned generally horizontally attendant to the hatch cover being closed,
a keeper fixed to the hopper car and having a guide positioned alongside said latch arm,
a gravity-actuated retainer hung from said guide and swingable transversely through the path of movement of said latch arm and having a jaw adapted to receive said arm therein in the latched position of said mechanism,
said jaw having an upper jaw member defining a catch adapted to engage the upper edge of said latching arm and having a lower jaw member defining a cam extending in the latched position beneath said arm and operative to swing said retainer including said catch out of the path of movement of the arm upon said arm being biased against said cam to a position that the arm may be quickly raised past the catch before said retainer swings to latching position.

4,063,765
AUTOMATICALLY LOCKING CROSSBOLT DEADLOCK
Russell W. Waldo, St. Paul, Minn., assignor to Ideal Security Hardware Corporation, St. Paul, Minn.
Continuation of Ser. No. 521,291, Nov. 6, 1974, abandoned, and a continuation-in-part of Ser. No. 477,148, June 6, 1974. This application June 24, 1976, Ser. No. 699,504
Int. Cl.² E05C *1/16*
U.S. Cl. 292—335 **2 Claims**

1. a crossbolt deadlock comprising:
a. a housing adapted to be mounted on a door hinged in a door frame, said housing defining notch means opening generally toward an adjacent portion of the door frame;
b. a strike adapted to be mounted on the door frame and having apertured lug means for reception in the notch means when the door is closed;
c. a crossbolt mounted in the housing for movements between locked and unlocked positions relative to the notch means and strike means;
d. yielding means urging said crossbolt to said locked position thereof;
e. means for moving the crossbolt to its unlocked position against bias of said yielding means;
f. an actuator lever in said housing for releasably holding said crossbolt in the unlocked position thereof, said lever extending in a direction transversely of the direction of movement of the crossbolt and having an inner end within said housing, an outer end projecting outwardly through an opening in said housing, and a crossbolt engaging portion intermediate its ends;
g. means pivotally mounting said inner end of the lever in said housing for swinging movements on an axis parallel to the direction of movement of the crossbolt toward and away from engagement of said crossbolt engaging portion with said crossbolt;
h. yielding means urging said lever in a direction of said swinging movement toward said crossbolt;

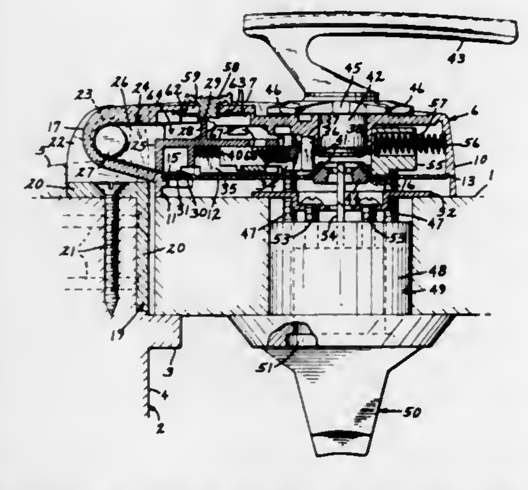

i. said outer end of the actuator lever being disposed to engage said strike responsive to closing of the door to move said lever in a direction to disengage the crossbolt engaging portion thereof from said crossbolt against bias of said yielding means;
j. said crossbolt engaging portion comprising a protuberance, said crossbolt defining a recess for reception of said protuberance and further defining a pair of notches spaced apart longitudinally of the direction of movement of said crossbolt between its locked and unlocked positions;
k. and a locking member mounted in said housing for movements in opposite directions transversely of the direction of movement of the crossbolt, said locking member having a portion receivable in said notches selectively to positively hold said crossbolt in said locked and unlocked positions selectively.

4,063,766
SASH LOCK
Fred Granberg, 5736 S. Rockwell St., Chicago, Ill. 60629
Filed June 24, 1976, Ser. No. 699,538
Int. Cl.² E05C *3/04*
U.S. Cl. 292—336 **13 Claims**

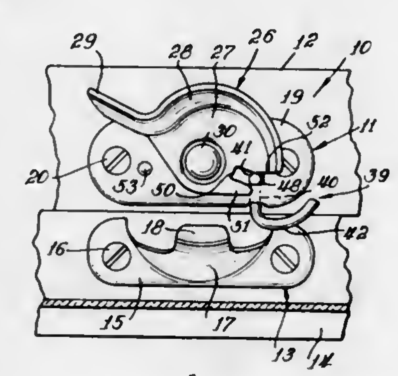

1. In a sash lock latch structure having a base, a latch plate, means for mounting said latch plate to said base for movement between a latching position and a retracted position, and biasing means urging said latch plate to said latching position, the improvement comprising:
a control member having a mounting portion, a plate lock portion, and a trip portion;
mounting means mounting said mounting portion adjacent said base for free pivoting of said control member about a pivot axis substantially parallel to the direction of movement of said latch plate, and reciprocable rearward and forward movement of said mounting portion in the direction of said axis, said lock portion and trip portion being disposed at opposite ends of said mounting portion and extending radially therefrom, said trip portion extending angularly to the direction of radial extension of said lock portion, the control member being biased to pivot about said pivot axis in a first direction;
first shoulder means movable with said latch plate for engaging said lock portion to urge the control member rearwardly to a withdrawn position when the latch plate is moved to said retracted position with said lock portion being biased into the path of movement of said shoulder means;
second shoulder means movable with said latch plate for engaging said lock portion to urge the control member forwardly from said lock position to dispose said trip portion in a forward trip position; and
third shoulder means on said base for limiting the forward movement of said lock portion to releasably retain the latch plate in the retracted position and the trip portion in the trip position, said lock portion being removed from engagement with said second shoulder means to permit said biasing means to pivot said latch plate from said retracted position to said latching position as a result of said trip portion being swung from the trip position by a pivoting of said control member in a second direction opposite to said first direction.

4,063,767
WATER HOSE HOLDER TONGS
John Kelly Hardin, Walnut Springs, Tex., assignor to The Raymond Lee Organization, Inc., New York, N.Y.
Filed Nov. 9, 1976, Ser. No. 740,082
Int. Cl.² B66C *1/62*
U.S. Cl. 294—16 **2 Claims**

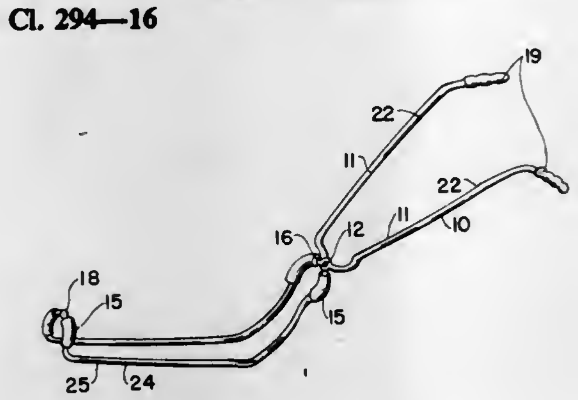

1. A tool for detachably holding a flexible water hose comprising
two shaped tongs pivotally joined together at a pivot point with a handle section and a leg section of each tong extending in opposed directions from the said pivot point, with
each leg section shaped as a first semi-circular clamp section generally located adjacent the said pivot point, and shaped as a second semi-circular clamp section generally located at a spaced distance from said first clamp section and at a greater spaced distance, in the direction away from which the handle section extends, from said pivot point than the said first clamp section, said clamp sections shaped to grip the periphery of a generally straight tubular water hose extending between said clamp sections, with the leg sections of both tongs of similar size and each generally shaped as a mirror image of the other, with
each handle section formed with a grip section at its free end and shaped so that the grip sections of both handle sections abut each other when the clamp sections of the tongs are fitted about a tubular water hose of a given size so that both grip sections may be held by one hand of the user when the clamp sections are gripped about a hose of the given size.

4,063,768
HANGING FLOWER BASKET TOOL
Anna Denis, New York, N.Y., assignor to The Raymond Lee Organization, Inc., New York, N.Y.
Filed July 26, 1976, Ser. No. 708,906
Int. Cl.² A47F *13/06;* A47G *7/00*
U.S. Cl. 294—19 R **1 Claim**

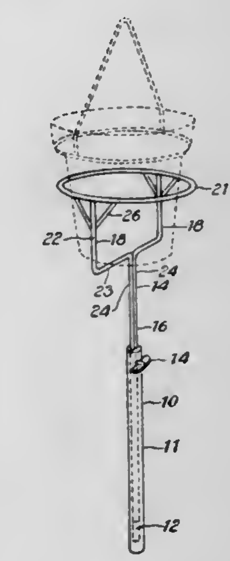

1. A tool for lifting a suspended flower pot onto or off a suspension support comprising
a pole section, and
a jaw section attached by a shank section of the jaw section to the pole section,
said jaw section formed of an open ring member fixed to a pair of spaced opposed L-shaped leg members which are joined to the said shank section, in which the shank section of the jaw section fits within an axial hole of the pole section, together with adjustable clamping means to fix the shank section in position to the pole section, with
each L-shaped leg member formed of a first leg section that extends from the attached ring member generally perpendicular to the plane of the ring member, and a second leg section that extends generally perpendicular to the first leg section and perpendicular to a shank member to which it is joined with both shank members joined along their length to form the said shank section and extending generally along an axis perpendicular to the center of the ring member, such that the bottom of a flower pot being lifted may rest on said second leg sections and against the ring member encircling the mid-section of said flower pot and with the shank section and pole section extending below the bottom of the lifted flower pot.

4,063,769
BALL RETRIEVER
Ronald Zimmer, 115 N. Benton Road, West Frankfort, Ill. 62896
Filed Sept. 27, 1976, Ser. No. 727,020
Int. Cl.² A63B *47/02*
U.S. Cl. 294—19 A **5 Claims**

1. A ball retriever including an upstanding tubular member, the lower end of said tubular member being open and defining a downwardly opening mouth of generally circular cross section, elongated coiled spring means, means anchoring said spring means in position extending across said mouth from one side of said tubular member to the other and with said spring means spaced to one side of a diameter of said mouth parallel-

ing said spring means, said mouth, other than said spring means, being at least substantially free of obstructions to the passage of a ball therethrough of a diameter at least slightly greater than the distance between said spring means and the remote side of said mouth on the other side of said diameter thereof, the lower end of said tubular member including opposite side downwardly opening notches formed therein in which

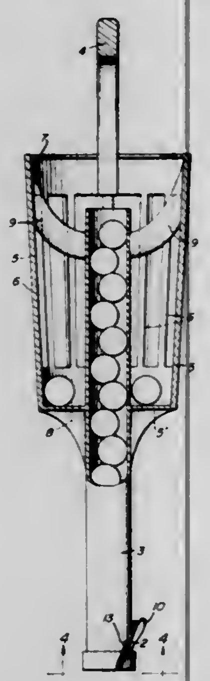

the portions of said spring means adjacent opposite sides of said mouth are seated, said spring means including opposite ends joined together to form an endless spring, said tubular member including means defining an upwardly opening hook on the exterior thereof above said mouth and over which the portion of said spring means remote from the portion thereof extending across said mouth is removably seated.

4,063,770
CARGO CONTAINER SPREADER WITH GUIDE APPARATUS
Dale H. Guthrie, Roxboro, N.C., assignor to RPC Corporation, Roxboro, N.C.
Filed May 9, 1975, Ser. No. 575,936
Int. Cl.[2] B66C *1/10*
U.S. Cl. 294—81 SF 8 Claims

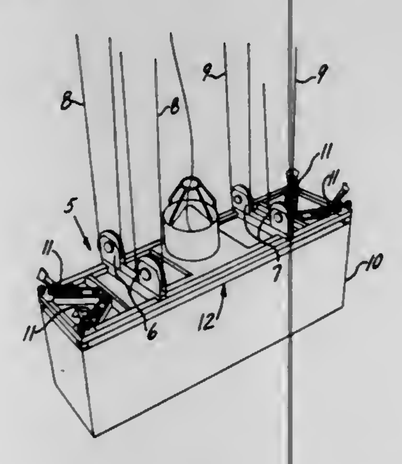

1. A cargo-container spreader having a frame and L-shaped guides located along a generally horizontal rectangle outlining the frame, each of said guides having a proximal portion and a distal portion contiguous therewith which extends, at operative position, downward from said rectangle alongside a region occupied by a container when attached to said spreader, pivotal supporting means for each guide fixed to said frame providing a swing axis for the guide located laterally inward of the periphery of the rectangle pivotally connecting with said proximal portion of the guide enabling said guide to be swung to an upward position of storage within a vertical projection of said rectangle; and operating means for shifting each guide from one of said positions to the other comprising:

lever means in fixed relation with each guide and having pivotal connective means radially spaced an effective lever length from said swing axis, said lever means being contained within a vertical projection of said rectangle at any position of the guide;

link means having one end portion connected with said pivotal connective means;

bell crank means having two distal means at opposite ends and an intermediate fulcrum means adapted for making pivotal connections, one of said distal means being pivotally connected with the other end portion of said link means;

means fixed to the frame pivotally connecting with said fulcrum means;

operating means located inwardly of said frame having one portion connected with the frame and another portion reciprocable with respect to the frame and connected to the other distal means to rotate said bell crank means, said bell crank means being located relative to the guide to swing said first named distal means through a path in close proximity to the swing axis.

4,063,771
BOTTLE CARRIER
Rodney K. Calvert, Dunwoody, Ga., assignor to The Mead Corporation, Dayton, Ohio
Filed June 11, 1976, Ser. No. 695,174
Int. Cl.[2] B65D *71/00*
U.S. Cl. 294—87.2 9 Claims

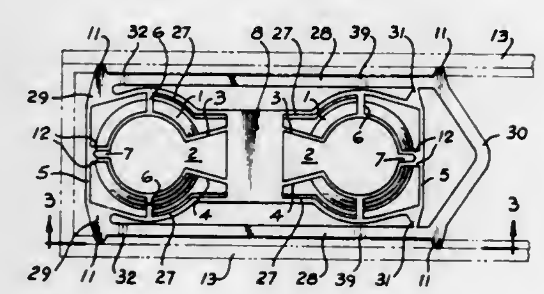

1. An integrally formed bottle carrier of a relatively rigid flexible plastic material comprising a body with a plurality of spaced means arranged in a single row for receiving and retaining the enlarged neck-shoulders of bottles, and two parallel positioning legs, each leg having two ends and attached at one end thereof to an edge of the body opposite the other end and adjacent to the spaced means at one end of the body, and a bottle separator interconnecting the opposite ends of said legs, said body, legs and bottle separator being in the same plane, with the bottle separator and a portion of each leg near the opposite end of the leg extending beyond the opposite end of the body in their position in the same plane as the body, each leg having a plastic hinge near its attachment to the body in order to permit the legs to be extended downwardly out of their position in the same plane as the body during the loading of bottles into the bottle carrier so that the bottle separator is disposed between adjacent bottles so as to prevent contact between the facing body postions of adjacent bottles retained in the carrier.

4,063,772
TAILGATE VENT
Ray Charles Kincaid, 8715 Starcrest No. 53, San Antonio, Tex. 78217
Filed Sept. 23, 1976, Ser. No. 726,075
Int. Cl.[2] B62D *35/00*
U.S. Cl. 296—1 S 6 Claims

1. In combination with a vehicle having an open top load carrying compartment having a tailgate, vent means allowing

the passage of air through the tailgate when the compartment is empty, but preventing the passage of material from the compartment comprising,

at least one opening in the tailgate,

a material shield positioned in the bottom of the compartment extending downwardly from above the opening to

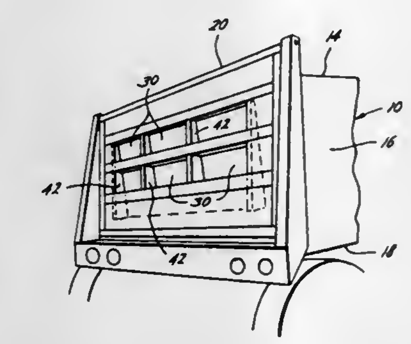

adjacent the bottom of the opening for preventing material in the compartment from moving through the opening, and

said shield forming an air passageway between the opening and the compartment for allowing the passage of air through the tailgate from the compartment.

4,063,773
AIR DEFLECTOR
J. Harley Modesette, 1047 Country Club Drive, West Plains, Mo. 65775
Filed July 30, 1976, Ser. No. 710,011
Int. Cl.[2] B60J *1/20*
U.S. Cl. 296—91 4 Claims

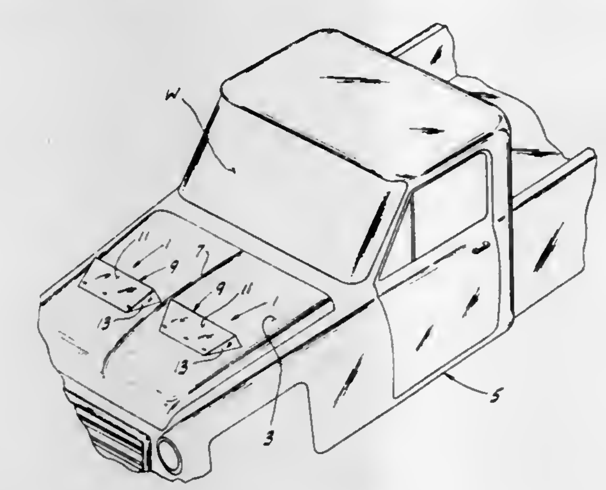

1. An air deflector for deflecting airborne particles, such as dust, rain, insects, road spray and the like clear of the windshield of a vehicle comprising a member of channel shape in cross section having a substantially planar web and side flanges, said member being adapted to be mounted in inverted position on the hood of said vehicle with said side flanges engaging the hood and extending generally longitudinally thereof with one edge of said web constituting a front edge extending transversely of the hood and being contiguous thereto and with the other edge of the web constituting a rear edge extending transversely of the hood and being spaced above the hood so that said web constitutes a ramp angling upwardly from front to rear, said ramp being positioned on said hood and being angled at such a slope that a projection of the plane of said ramp extends up over the top of said vehicle windshield whereby as the vehicle is driven forwardly said airborne particles are deflected by said web up over the windshield, and said web having a plurality of ribs thereon extending generally from the front to the rear edge of the web, said ribs being on the outer surface of the web and angling outwardly toward the side flanges as they extend from the front to the rear edge of the web.

4,063,774
CONVERTIBLE STATION WAGON ROOF
George L. Hanks, 705 Jonette St., Bradley, Ill. 60915
Filed Aug. 24, 1976, Ser. No. 717,227
Int. Cl.[2] B60J *7/00*
U.S. Cl. 296—137 E 10 Claims

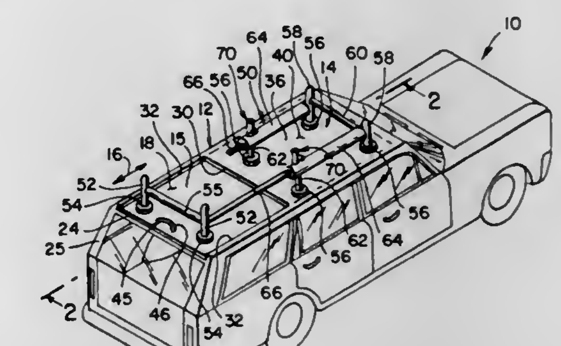

1. A convertible roof for a station wagon, comprising:

a. a hatch adapted to form part of the roof of a station wagon for sliding movement in a substantially horizontal plane between an open and closed position relative to the stationary roof portion thereof,

b. mounting means to provide sliding engagement for said hatch relative to said stationary roof between the closed position in which said hatch extends outwardly from said stationary roof to cover the opening extending through the convertible roof to the open position in which said hatch is contained within a recess in said stationary roof,

c. handle means connected to and extending outwardly from said hatch to be gripped by the user to facilitate sliding movement of said hatch between the closed and open positions, and

d. a roof rack mounted between said stationary roof portion and said hatch and adapted to be movable between extended and retracted positions in conjunction with the movement of said hatch.

4,063,775
UNITARY CYCLE SEAT SUPPORT UNIT
Robert H. Mesinger, 4 Lake Crest Drive, Danbury, Conn. 06810
Filed Oct. 2, 1975, Ser. No. 618,822
Int. Cl.[2] B62J *1/00*
U.S. Cl. 297—201 16 Claims

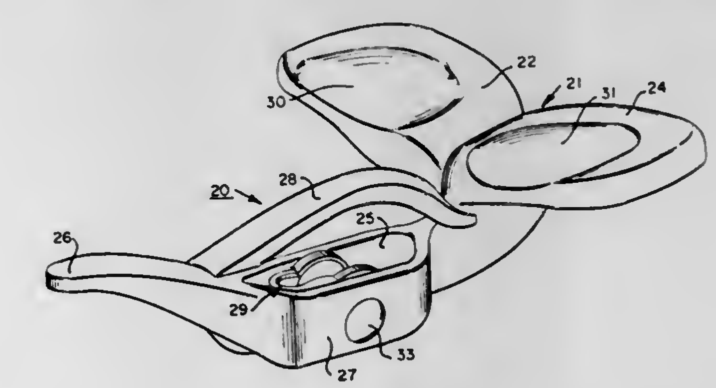

1. A unitary molded cycle seat undercarriage T-shaped in plan and adapted for interconnected retention with padding material and a cycle saddle cover and mounting to a cycle, comprising:

A. a unitary, centrally-located frame portion positioned for mounting to a cycle and incorporating a rearward vertically disposed base section; and

B. two independent seat portions integrally connected to said vertical base section along a single edge of each of the seat portions, with the remainder of the seat portions extending from their respective edges in a cantilevered arrangement forming in rear elevation a substantially

Y-shaped configuration therewith, with the two independent seat portions forming the arms of the "Y" and the base section forming the vertical portion of the "Y," thereby imparting a flexible supporting quality to said seat portion.

4,063,776
VEHICLE SEATS
Ernst Wahlmann, Volksdorf, and Willi Schöttker, Nordsehl, both of Germany, assignors to P.A. Rentrup, Hubbert & Wagner Fahrzeugausstattungen GmbH & Co. KG, Germany
Filed July 2, 1976, Ser. No. 702,123
Claims priority, application Germany, July 5, 1975, 2530082; Sept. 29, 1975, 2543357; Feb. 14, 1976, 2605963
Int. Cl.² A47C *1/024*
U.S. Cl. 297—361 **2 Claims**

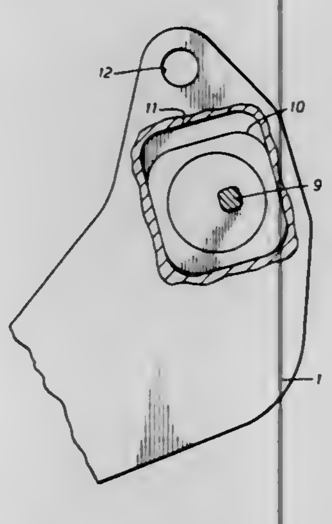

1. In a seat,
means defining a seat part,
means defining a back rest part, and
linkage means interconnecting the seat part and the back rest part to enable pivotal adjustment of the inclination of the seat part relative to the back rest part, said linkage means comprising
a part rigid with the seat part,
a part rigid with the back rest part and having a recess therein,
a rotatable eccentric disc having a large ratio of diameter to thickness and an operational surface which is complementary to and engages in the recess of said part rigid with the back rest part, and
a slide member in which the eccentric disc is mounted and which is itself slidably mounted in the part rigid with the seat part.

4,063,777
SHOULDER SAFETY BELT RETRACTOR
Juichiro Takada, Tokyo, Japan, assignor to Takata Kojyo Co., Ltd., Tokyo, Japan
Filed Apr. 16, 1976, Ser. No. 677,639
Claims priority, application Japan, Apr. 19, 1975, 50-046978
Int. Cl.² A62B *35/00*
U.S. Cl. 297—388 **9 Claims**

1. Seat belt assembly for vehicles equipped with an emergency locking type belt retracting device characterized in that said seat belt assembly comprises a normal position detection switch which is actuated when the passenger assumes a predetermined position on the seat as when reclining comfortably against the seat, said switch being provided in the seat back or other suitable location, a belt wear detection switch designed to be actuated when the passenger puts on the belt, said switch being provided in the buckle or other suitable position, a lock mechanism adapted to inhibit draw-out of the belt in the event of emergency, said lock mechanism being provided in the winding device, a reversely toothed wheel which is toothed reversely to the ratchet wheels of said lock mechanism, said reversely toothed wheel being secured on said ratchet wheel and the like, and a solenoid provided in a frame or other member and adapted to have a check lever fitted in said frame engaged with said wheel, said solenoid being electrically connected to said both switches whereby only when the passenger both takes the predetermined position and wears the belt, is said solenoid energized or deenergized to stop the retraction of the belt by the action of said check lever, and means including a reversely toothed wheel and other members for allowing draw-out of the belt, and in the event of trouble such as a crash, the belt is emergency locked regardless of the position of the passenger.

4,063,778
INDIVIDUAL RESTRAINING DEVICE FOR A VEHICLE USER
John J. Chika, 1350 Orchard Ridge Road, Bloomfield Hills, Mich. 48013
Filed Aug. 2, 1971, Ser. No. 168,314
Int. Cl.² A62B *35/00*
U.S. Cl. 297—389 **40 Claims**

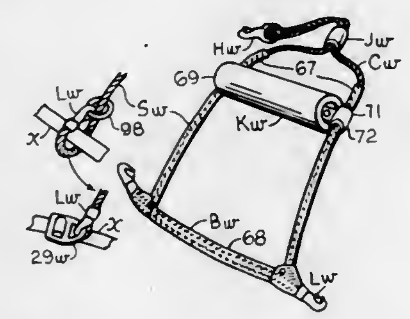

1. An individual body restraining device for protection of an occupant of a transport vehicle having a rigid structure and seats, comprising in combination: a flexible lap-belt element transversely spanning the lap of the seated occupant and adjustably connectable and disconnectable to the vehicle structure on the left and right side of the seated applicant; a flexible left and right side shoulder-strap elements anchored at their lower ends to the lap-belt element, with their upper ends reaching upwardly over the occupant's shoulders and joining behind his head for connecting, adjusting and disconnecting to and from the structure of said vehicle and comprising easily operable means to adjust the relative size of the loop formed by them around and back of said occupant's head; a semi-rigid chin-and-neck guard element positioned below said occupant's chin and supported there by a rigid means transversely spanning his upper chest between the shoulder-strap elements and securely attached to them.

4,063,779
DUMP TRUCK LOAD TRANSFER DEVICE
Paul H. Martin, Willowdale, and John C. Martin, Toronto, both of Canada, assignors to Diesel Equipment Limited, Toronto, Canada
Filed Aug. 2, 1976, Ser. No. 710,860
Int. Cl.² B62D *61/12*
U.S. Cl. 298—22 P **10 Claims**

1. In a dump truck having a dump body which includes a

tailgate for closing the discharge end thereof, said tailgate being pivotably mounted at its upper end to said dump body and releasably latchable at its lower end with respect to said dump body, the truck having a body frame supported by front and rear wheel sets, the improvement of an axle load distribution means comprising,
a. a tag frame having a front end and a back end,
b. a wheel set mounted for rotation on said tag frame at the back end thereof,

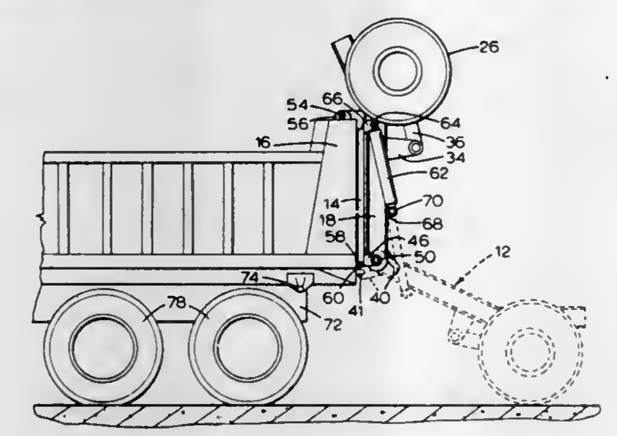

c. means at said front end of said tag frame pivotably mounting said tag frame with respect to said tailgate for movement between a first elevated position in which said tag frame is disposed closely adjacent said tailgate with its wheel set elevated out of ground engagement and a second lowered position in which said wheel set is in ground engagement and serves to transfer load from said rear wheel set to said front wheel set,
d. loading means extending between the dump body and the tag frame operable to move said tag frame between said first and second positions.

4,063,780
METHOD OF RECOVERING LIQUID AND GASEOUS PRODUCTS OF OIL SHALE
Andrejs Zvejnieks, Atlanta, Ga., assignor to AZS Corporation, Atlanta, Ga.
Filed Jan. 30, 1976, Ser. No. 653,907
Int. Cl.² E21B *43/24;* **E21C** *41/10*
U.S. Cl. 299—2 **15 Claims**

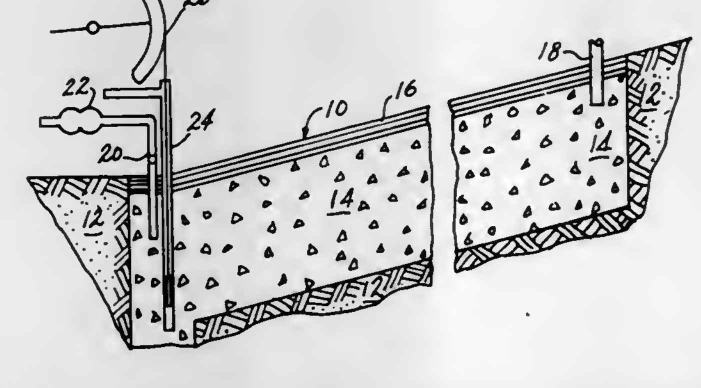

1. A method for recovering products from oil shale comprising the steps of: providing an enclosed sloping cavity by constructing said cavity as an open trench in a relatively impermeable mineral formation, placing crushed oil shale in said trench, covering said crushed oil shale with a relatively impermeable material, such as clay, igniting said oil shale at the upper portion of said trench, introducing a gaseous means such as air or oxygen for supporting combustion at one or more points located near the upper end of the enclosed trench, and as the products of the combustion and pyrolisis move downward in the sloping trench withdrawing any liquid and or gaseous material at one or more points located near the lower end of said trench.

4,063,781
APPARATUS FOR LOADING MATERIAL
Werner Georg, Lunen, and Gerhard Merten, Altlunen, both of Germany, assignors to Gewerkschaft Eisenhutte Westfalia, Westfalia, Germany
Filed Mar. 1, 1976, Ser. No. 662,609
Claims priority, application Germany, Mar. 6, 1975, 2509803
Int. Cl.² E21C *35/20*
U.S. Cl. 299—34 **18 Claims**

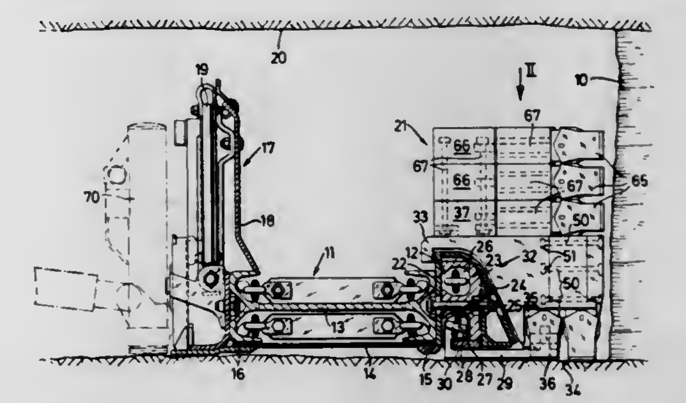

1. In a loading apparatus for use in loading valuable metallic ore material onto a conveyor in a mine working, the apparatus being supported for movement along guide means at one side of the conveyor; the improvement comprising providing an inclined continuous loading surface which extends in the direction of movement of the apparatus and which serves to guide and load material onto the conveyor as the apparatus is moved, the continuous loading surface being defined by separable parts arranged in a side-by-side relationship so as to enable the width of said loading surface to be altered by changing the number of said parts.

4,063,782
LONG WALL MINING APPARATUS GUIDE STRUCTURE
Karl Bahre, Gladbeck, and Reinhold Krohm, Herne, both of Germany, assignors to Klockner-Werke AG, Duisburg, Germany
Filed Oct. 29, 1976, Ser. No. 737,086
Claims priority, application Germany, Nov. 20, 1975, 2552029
Int. Cl.² E21C *35/12*
U.S. Cl. 299—34 **19 Claims**

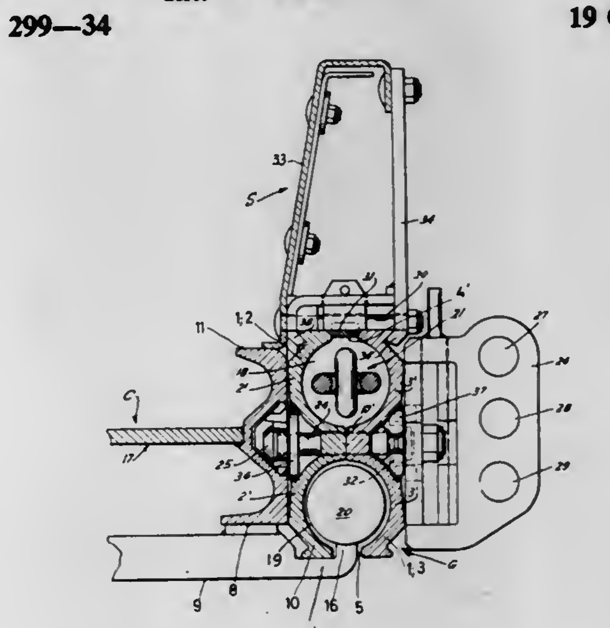

1. In a long wall mining apparatus, a combination comprising an elongated conveyor adapted to extend along a mine face of an underground mine gallery; a mining machine, such as a coal planer or the like reciprocatable along said conveyor between the latter and the mine face and having a bottom plate extending with an end portion thereof below and beyond said conveyor, said bottom plate having a bottom face adapted to slide on the floor of the mine gallery; guide means for guiding

said mining machine along said conveyor and comprising an elongated cylindrical guide member extending in the direction of the conveyor fixedly attached to said end portion of said bottom plate and a guide channel parallel to said conveyor slidingly housing said guide member; and means operatively connected to said bottom plate for reciprocating said mining machine along said conveyor and comprising endless chain means having an upper and a lower run and chain guide means connected to the side of the conveyor opposite said mine face and forming two separate superimposed channels for respectively guiding said upper and said lower run of said endless chain means, said superimposed channels being formed by two mirror-symmetrically arranged identical profiled members.

4,063,783
RETAINER FOR WHEEL TRIM
Edward G. Spisak, 35700 Oakwood Lane, Westland, Mich. 48185
Filed Feb. 22, 1977, Ser. No. 770,815
Int. Cl.² B60B *7/06*
U.S. Cl. 301—37 P **9 Claims**

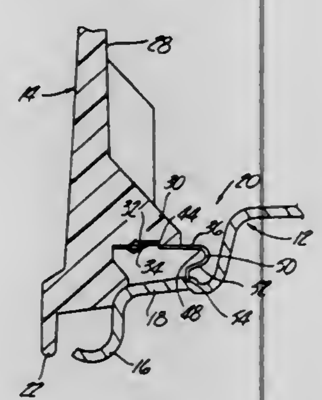

1. A wheel trim member having a bracket member extending axially from a back surface of said wheel trim member, a retainer mounted on a radial outer surface of said bracket member and including a base portion, said base portion including attaching portions at circumferentially spaced points engaging opposite edge portions of said bracket member to prevent relative circumferential and radial movement of said retainer relative to said bracket member, said bracket member having a radially outwardly opening recess, a projecting element forming part of said retainer and disposed in said recess and preventing axial movement of said retainer relative to said bracket member, and means forming part of said base of said retainer to grip the tire rim of a wheel.

4,063,784
TWO-PRESSURE BRAKE CONTROL VALVE FOR AIRBRAKES
Peter Pick, Munich, Germany, assignor to Knorr-Bremse GmbH, Munich, Germany
Filed Feb. 11, 1977, Ser. No. 769,334
Claims priority, application Germany, July 30, 1976, 2634453
Int. Cl.² B60T *15/22*
U.S. Cl. 303—69 **16 Claims**

1. In a two-pressure brake control valve for a single stage releasing indirectly acting airbrake for railway vehicles having a service brake portion connected to a brake line, an auxiliary reservoir, an emergency reservoir and a brake cylinder, said service brake portion comprising a slidingly displaceable main piston connected to said brake line and auxiliary reservoir to be responsive to the difference in pressure between said brake line and auxiliary reservoir and displaceable in response to the difference in pressure in said brake line and auxiliary reservoir during braking and release operations, an auxiliary piston slidably displaceable in said main piston between two end positions and one side subjected to brake line pressure and the other side subjected to auxiliary reservoir pressure, said auxiliary piston having a greater sensitivity of response to pressure difference than said main piston, a release acceleration valve connected to the brake line and to the emergency reservoir, means in the displacement path of said auxiliary piston and responsive to movement of the auxiliary piston for actuating said release acceleration valve to an open position to connect

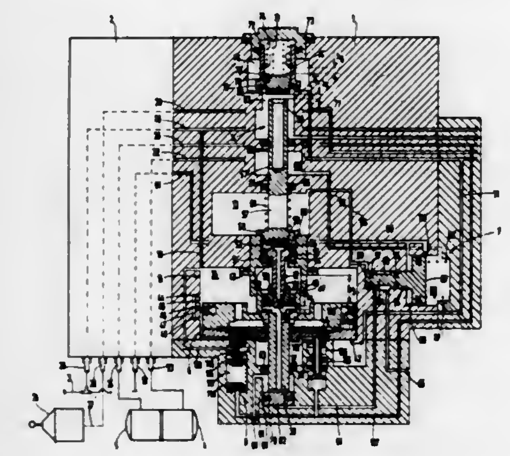

said emergency reservoir to said brake line in the initial phase of a release operation, and means responsive to said actuating means for connecting said emergency reservoir to said auxiliary reservoir during the release operation.

4,063,785
FAIL SAFE BYPASS FOR A SKID CONTROL SYSTEM
Leonard T. Tribe, Ann Arbor, Mich., assignor to Kelsey-Hayes Company, Romulus, Mich.
Filed Nov. 18, 1975, Ser. No. 633,110
Int. Cl.² B60T *8/10*
U.S. Cl. 303—115 **1 Claim**

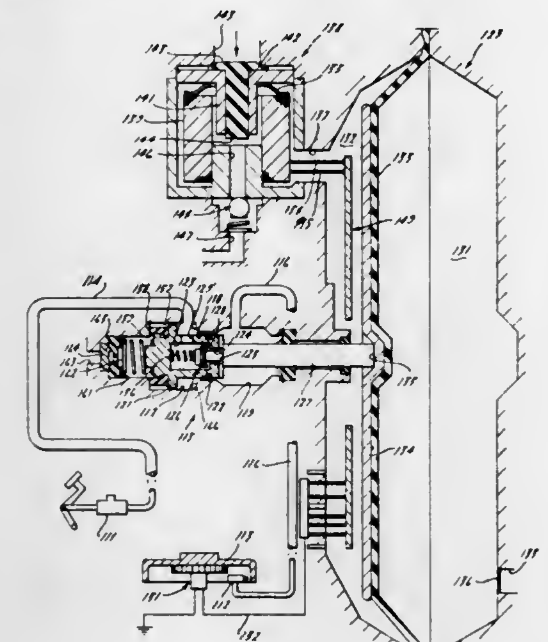

1. In a skid control system for preventing the skidding of a wheel of a vehicle having a fluid pressure actuating wheel brake, an operator controlled source of fluid pressure for actuating said wheel brake, conduit means providing fluid communication between said source and said wheel brake, and modulator means interposed between said source of fluid pressure and said wheel brake for restricting the communication between said source and said wheel brake in response to an incipient skid condition, said modulator means comprising a housing defining a fluid inlet in communication with said source and a fluid outlet in communication with said wheel brake, a passage connecting said fluid inlet with said fluid outlet, said passage having a restricted portion defining a valve seat, a bypass valve element supported within said passage and having a valving portion adapted to cooperate with said valve seat, said bypass valve element being movable in said passage from a normal position in which said valve portion contacts said valve seat and prevents communication of said fluid inlet

with said fluid outlet through said passage and a fail safe position in which said valve portion is free of said valve seat and opens communication from said fluid inlet to said fluid outlet through said passage, a fluid inlet port in said bypass valve element, a fluid outlet port in said bypass valve element, passage means extending through said bypass valve element from said fluid inlet port to said fluid outlet port, said fluid inlet port being in fluid communication with said fluid inlet when said bypass valve element is in its normal position, said fluid outlet port being in communication with said fluid outlet, a skid control valve seat defined by said bypass valve element in said bypass valve passage means, a skid control valve supported by said bypass valve element and movable between a skid control position in engagement with said skid control valve seat for preventing fluid communication from said fluid inlet port to said fluid outlet port to a normal position wherein fluid communication is permitted through said fluid inlet port to said fluid outlet port, actuating means engageable when in a normal position with each of said bypass valve element and said skid control valve for holding said valves in their respective normal positions, means for moving said actuating means from its normal position to a skid control position in which said skid control valve is free of engagement with said actuating means and is movable from its normal position to its skid control position, said bypass valve element having an area exposed to the pressure in said passage for holding said bypass valve element in its normal position when fluid pressure is exerted in said passage and said actuating means is in its skid control position and is not engaging said bypass valve element, and spring means acting upon said bypass valve element for moving said bypass valve element from its normal position to its fail safe position for permitting fluid communication from said fluid inlet to said fluid outlet in the event of failure of said actuating means to be retained in its normal position.

4,063,786
SELF-LUBRICATING AUXILIARY BEARING WITH A MAIN BEARING FAILURE INDICATOR
Marcus E. Rall, Cridersville, Ohio, assignor to Westinghouse Electric Corporation, Pittsburgh, Pa.
Filed Dec. 9, 1976, Ser. No. 748,795
Int. Cl.² F16C *17/20*
U.S. Cl. 308—1 A **6 Claims**

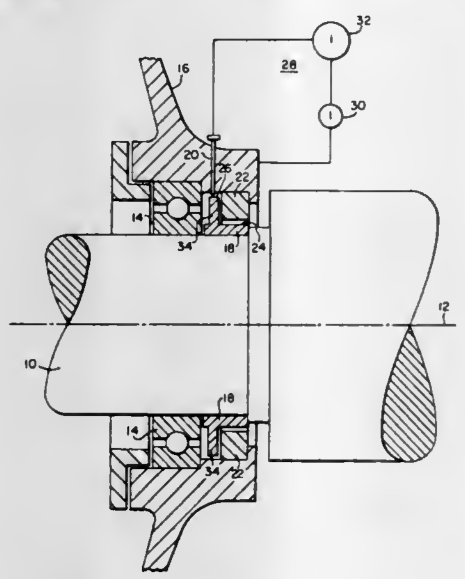

1. An apparatus having an on-condition bearing structure therein, said apparatus comprising:

a rotatable shaft;

a stationary bearing housing through which said shaft extends, said stationary bearing housing having a bearing surface and a mounting surface axially displaced from each other along said shaft;

a bearing member disposed between said shaft and said bearing surface;

a means for indicating failure of said bearing member;

a sleeve of self-lubricating material disposed about said shaft, said sleeve being of suitable length and having a radially inner surface surrounding said shaft and having a radially outer surface in register with said bearing housing's mounting surface; and

a runner mounted on said shaft to rotate therewith, having a first radial extension portion disposed between said shaft and said sleeve's inner surface and having a second radial extension portion, said first radial extension portion and said inner surface being normally separated by a predetermined distance and said second radial extension portion normally being separated from said indicating means by a predetermined clearance which is less than said predetermined distance wherein upon failure of said bearing member said runner member's second radial extension portion contacts and actuates said indicating means and said runner member's first radial extension portion engages said sleeve's inner surface causing said shaft to be journaled thereby.

4,063,787
CYLINDRICAL, FLEXIBLE BEARINGS
Gordon J. Bakken, Brigham City, and Richard A. Anderson, Tremonton, both of Utah, assignors to Thiokol Corporation, Newtown, Pa.
Filed Feb. 3, 1977, Ser. No. 765,145
Int. Cl.² F16F *1/38*
U.S. Cl. 308—26 **8 Claims**

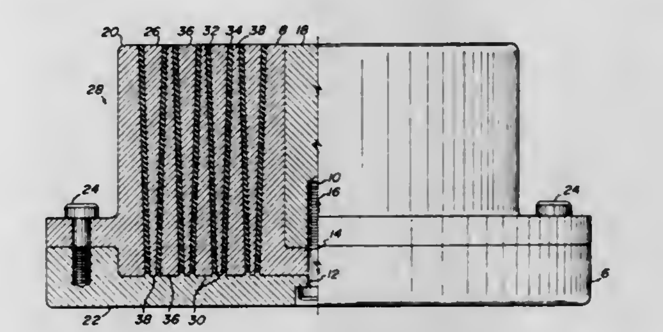

1. An annular, flexible bearing, comprising:

a plurality of annular, concentric, rigid shims, spaced apart radially, each shim having opposing interior and exterior conical surfaces so that the wall thereof is wedge-shaped, and each shim has a thick end and a thin end, the thick and thin ends of adjacent shims being alternated; and

a cured elastomer in the spaces between the shims and bonded thereto to form an integral assembly, whereby, as the elastomer shrinks during its cure cycle, adjacent shims are drawn toward one another axially to relieve tensile stresses that would otherwise remain in the elastomer.

8. In a cylindrical, flexible bearing having concentric, annular, rigid shims spaced apart radially and a cured elastomer filling the spaces between the shims and bonded thereto, wherein the interior and exterior surfaces of each shim are opposing, conical surfaces, so that the walls thereof are wedge-shaped, having a thick end and a thin end, and wherein the thick and thin ends of adjacent shims are alternated, and wherein the elastomer shrinks in volume during its cure and cooling cycle, thereby drawing the shims together axially, the method of producing such a bearing wherein all of the shims are axially aligned with one another, comprising:

placing all said shims in concentric positions;

spacing said alternate shims apart axially by the same distance that they are drawn together axially by the elastomer as it cures and cools;

filling the spaces between the shims with the elastomer in its uncured state; and

curing and cooling the elastomer, so that the shims are drawn into axial alignment with one another as the elastomer shrinks in volume.

4,063,788
CHASSIS CAPTIVATION ARRANGEMENT FOR VIBRATION ATTENUATION
Leonard Latasiewicz, Hoffman Estates, and Peter Franklin Stultz, Des Plaines, both of Ill., assignors to Motorola, Inc., Schaumburg, Ill.
Filed June 21, 1976, Ser. No. 698,379
Int. Cl.^{2} A47B *81/06;* **H05K** *5/02*
U.S. Cl. 312—7 R **5 Claims**

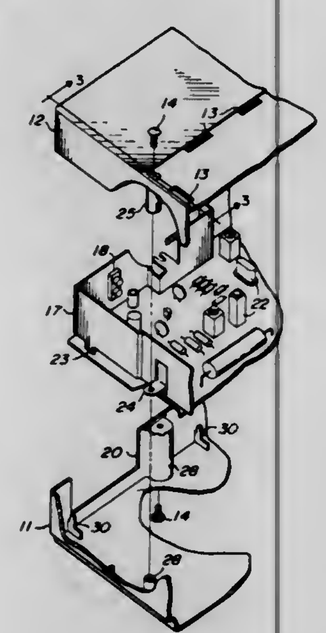

1. A chassis captivation arrangement for electronic apparatus including in combination:
- a chassis for supporting at least an insulating circuit board and associated components, the chassis comprising laterally projecting tab means;
- first and second separable housing portions, each housing portion comprising integrally formed members in alignment with the tab means for captivating each said tab means between two of the integrally formed members of the respective housing portions when the housing portions are joined;
- whereby said tab means form the sole support for the chassis, the insulated circuit board and the associated components, so that vibration is attenuated before reaching the insulated circuit board and its associated components.

4,063,789
SIGNALLING ARRANGEMENT FOR AUTOMOTIVE VEHICLE STEERING WHEELS
Walter Kreisl, Wiesthal, Germany, assignor to Karl Schmidt GmbH, Neckarsulm, Germany
Filed Nov. 3, 1976, Ser. No. 738,453
Claims priority, application Germany, Nov. 4, 1975, 7534929
Int. Cl.^{2} H01R *15/12*
U.S. Cl. 339—3 S **6 Claims**

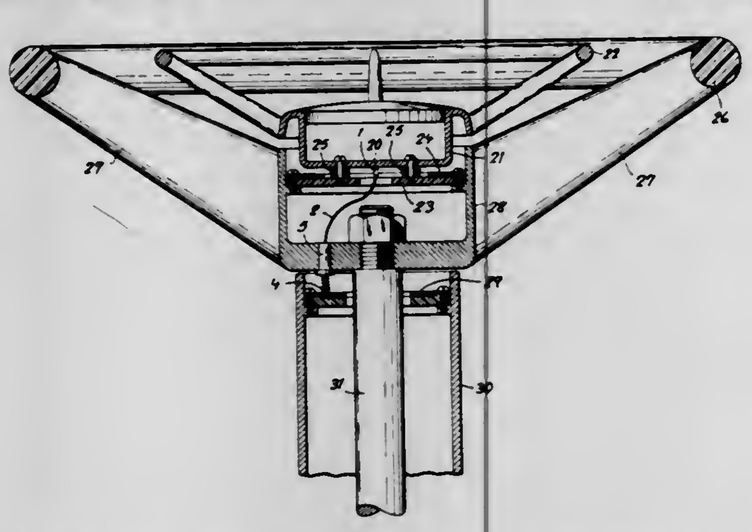

1. A steering wheel connector between a signaling contact arrangement and a slip ring, said connector comprising:
- a cable connected at one end to said contact arrangement;
- an insulating sleeve received in the hub of the steering wheel and having one end turned toward said contact arrangement, said sleeve formed with a throughgoing internal passage including a cylindrical portion opening at said one end of said sleeve, a rectangular cross section portion opening at said other end of said sleeve, and a peripheral shoulder between said portions and formed with a circular bore;
- an upwardly and downwardly movable contact finger slidable in said sleeve, said contact finger having a cylindrical shank guided in said bore and extending through said cylindrical portion out of said sleeve at said other end of said sleeve and formed with a head, a rectangular-section body guide in said rectangular section portion and a connector sleeve formed on said body and secured to the other end of said cable within said insulating sleeve; and
- a coil spring seated against said shoulder and bearing against said head while surrounding said shank in said cylindrical portion.

4,063,790
FLUID CONDUIT ASSEMBLY
Donald L. Kleykamp, Springboro; Peter J. Neroni, Dayton; Victor M. Grabovez, Troy, all of Ohio, and Homer N. Holden, Sylva, N.C., assignors to Dayco Corporation, Dayton, Ohio
Filed Oct. 15, 1976, Ser. No. 732,570
Int. Cl.^{2} H01R *3/04*
U.S. Cl. 339—16 R **8 Claims**

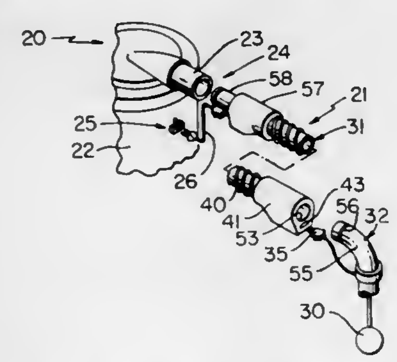

1. A fluid conduit assembly comprising, a first and a second conduit means adapted to be connected and disconnected, a first electrical connector device carried by said first conduit means, a second electrical connector device carried by said second conduit means, and means locking said electrical connector devices together with same first and second conduit means connected, said locking means assuring electrical continuity through said devices even upon exerting forces tending to pull said conduit means apart; said first conduit means being a flexible polymeric hose comprising a collar having at least one shoulder therein disposed transverse a longitudinal axis of said hose, said collar comprising a polymeric hose connector bonded to said hose as an integral part thereof; said first electrical connector device comprising a female connector device embedded in said hose connector; said second electrical connector device comprising a male connector device comprised of a compressible resilient polymeric material having a shoulder defined thereon having a compressible resilient apex being adapted to be yieldingly compressed and urged into locking engagement with said shoulder in said collar so that said shoulders comprise said locking means, said compressible apex returning to its original configuration after release of compressive forces thereon and serving to engage said shoulder in said collar and yieldingly hold said male connector device in locking engagement.

4,063,791
CONNECTOR FOR LEADLESS INTEGRATED CIRCUIT PACKAGES
John M. Cutchaw, 7333 E. Virginia, Scottsdale, Ariz. 85257
Filed Dec. 27, 1976, Ser. No. 754,365
Int. Cl.^{2} H05K *1/12;* **H01R** *13/54*
U.S. Cl. 339—17 CF **5 Claims**

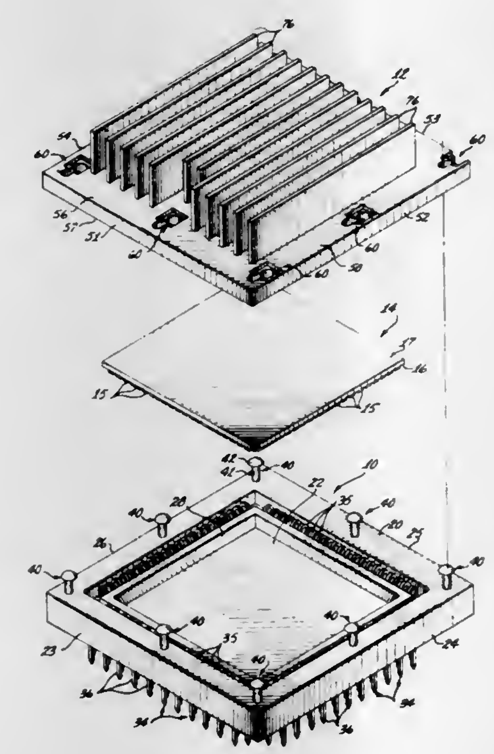

1. A connector for removably mounting a leadless circuit package of planar configuration on a backpanel and electrically coupling the terminal pads of the leadless circuit package to the backpanel, said connector comprising:

a. a housing for mounting on the backpanel, said housing having endless upstanding side walls which form the perimeter of an upwardly opening chamber into which the leadless circuit package is nestingly positionable with a planar surface thereof disposed to extend above the side walls of said housing;

b. electrical interconnecting means mounted in said housing and extending into the chamber thereof for engaging the terminal pads of the leadless circuit package when that package is positioned therein, said electrical interconnecting means extending from said housing for engaging the backpanel when said housing is mounted thereon;

c. a plurality of stud means mounted on said housing in substantially evenly spaced increments so as to be upstanding from each of the side walls thereof in an array which surrounds the cavity of said housing; and

d. a cover positionable above said housing in overlaying relationship with respect to the side walls thereof and in contiguous engagement with the extending planar surface of the leadless circuit package when that package is positioned in the chamber of said housing, said cover being laterally and downwardly movable relative to said housing for exerting a downwardly directed force on the leadless circuit package when that package is positioned in the chamber of said housing, said cover having a plurality of apertured inclined plane means formed therein for receiving said stud means when said cover is positioned above said housing and which move into engagement with said stud means upon lateral movement of said cover to cause downward deflection thereof.

4,063,792
SLIP-RING CONNECTION
James Alec Lodge, Maidenhead, England, assignor to EMI Limited, Hayes, England
Filed Jan. 7, 1977, Ser. No. 757,506
Claims priority, application United Kingdom, Jan. 29, 1976, 3615/76
Int. Cl.^{2} H01R *39/00*
U.S. Cl. 339—5 L **10 Claims**

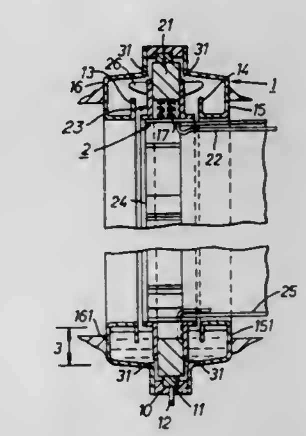

1. A slip-ring connection which is effectively immersed in an insulating liquid when in motion, to provide an electrical connection between relatively movable parts of an apparatus, the slip-ring connection including first and second relatively movable co-axial annular parts, a slip-ring mounted on one of the annular parts and one or more electrically conducting brushes mounted on the other, wherein the first part is shaped to form a reservoir, open on one side, to retain insulating liquid and the second part is shaped and mounted to project at least in part into the opening in the first part to bring the slip-ring and the one or more brushes into contact with the reservoir, the arrangement being such that the contact surface between the slip-ring and brushes is immersed in the liquid at the lowest point of the reservoir when the relatively movable parts are at rest and such that the insulating liquid is carried to substantially all parts of the contact surface as a result of the relative motion.

4,063,793
FLIP LIP BOOT FOR PLUGS AND CONNECTORS
Edwin B. Judd, Greenwich, R.I., assignor to General Electric Company, New York, N.Y.
Continuation of Ser. No. 562,991, March 28, 1975, abandoned. This application Nov. 8, 1976, Ser. No. 739,926
Int. Cl.^{2} H01R *11/02*
U.S. Cl. 339—60 R **5 Claims**

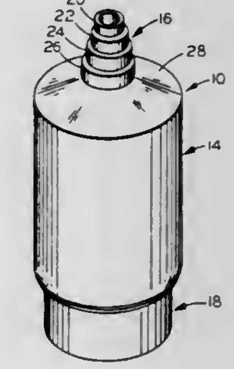

1. A pair of boots for shielding a cap and connector,
- said boots each being an elongated self supporting sheath of resilient material,
- each boot of said pair conforming in its dimensions to those of the other boot of the pair,
- each sheath having a rear section which bears against and about a cable extending respectively from a cap and a connector in said sheaths,

means for positioning the front end of each sheath relative to the front of the cap and connector disposed therein,
and each sheath having a pliable front section extending from contact and in contact respectively with a front end surface of said cap and connector,
each sheath front end section having resiliency sufficient to permit it to expand over and about a front end section of the other boot of said pair.

4,063,794
BATTERY POST CONNECTOR
Larry Eugene Dittmann, Harrisburg, Pa., assignor to AMP Incorporated, Harrisburg, Pa.
Filed May 17, 1976, Ser. No. 687,065
Int. Cl.² H01R *11/26*
U.S. Cl. 339—230 R **15 Claims**

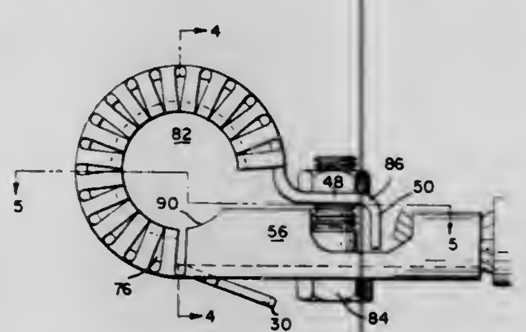

1. An electrical connector for use on a battery post or the like, comprising a channel member, a hoop portion extending from one end of said channel member, and an electrical cable-receiving portion extending from the other end of the channel member, said hoop portion comprising an outer wall with a plurality of tabs spaced along said wall and extending from either side thereof, said tabs being inwardly bent upon themselves to form a substantial closed cross-section in the hoop portion and to provide an inner wall defining a post-receiving opening.

4,063,795
ELECTRO-OPTIC HOLOGRAPHIC STORAGE DEVICE HAVING UNLIMITED RECORD-ERASE CAPABILITY
Jean Pierre Huignard; Jean Pierre Herriau, and François Micheron, all of Paris, France, assignors to Thomson-CSF, Paris, France
Filed May 18, 1976, Ser. No. 687,628
Claims priority, application France, May 23, 1975, 75.16063
Int. Cl.² G02B *27/00;* G11C *11/42*
U.S. Cl. 350—3.5 **4 Claims**

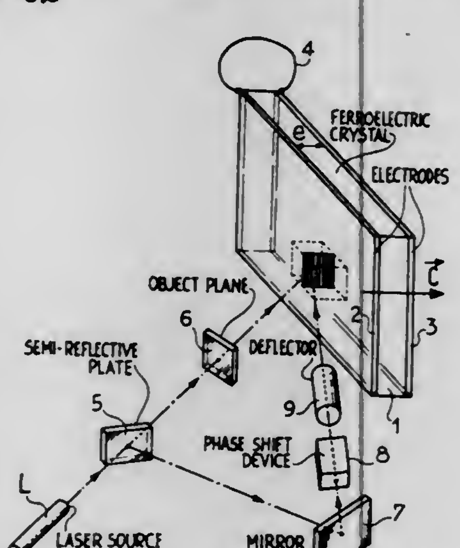

4. An optical storage device comprising a crystal adapted for storing information in elementary zones which are short circuited, a coherent radiation source, first optical means splitting the radiation into an object beam and a reference beam, a device for optically modulating said object beam, a device for orientating said reference beam and a phase-shift device producing phase-shift in one of the two said beams, the phase-shift being zero during a first storage of information inducing variation in the refractive index and equal to π during a second storage thereof which erases the first, the intersection between the modulated object beam and the reference beam being performed in a short-circuited elementary zone with no external field applied.

4,063,796
OPTICAL DEVICE FOR AN ENDOSCOPE WITH BELLOWS EXPANSION COMPENSATION MEANS
Siegfried Hiltebrandt, Knittlingen, Germany, assignor to Richard Wolf GmbH, Knittlingen, Germany
Filed June 23, 1976, Ser. No. 698,899
Claims priority, application Germany, June 25, 1975, 7520162[U]
Int. Cl.² G02B *7/00*
U.S. Cl. 350—70 **1 Claim**

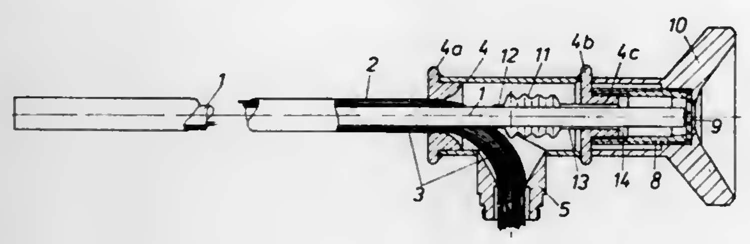

1. In an optical device for an endoscope, comprising an inner tube which holds an optical system and which extends into an outer tube having a proximal end region rigidly connected to a sleeve which is of enlarged internal diameter, said sleeve being connected to an eyepiece into which the inner tube also extends, the improvement comprising: means interposed between the inner tube and the sleeve for taking up relative longitudinal expansion therebetween, whereby to compensate for differing amounts of longitudinal expansion in the inner tube, the outer tube and the sleeve to reduce the possibility of stresses and fractures when the optical device is heated; said means comprising a bellows which extends around said inner tube, said bellows being connected at its distal end to the inner tube and being provided at its proximal end with an extension which has a clearance fit around the inner tube and is rigidly connected to a proximal part of the sleeve.

4,063,797
TRANSMITTED ILLUMINATION DEVICE FOR MICROSCOPES
Akio Taira, Hachioji, Japan, assignor to Olympus Optical Co., Ltd., Tokyo, Japan
Filed Oct. 10, 1975, Ser. No. 621,612
Claims priority, application Japan, Oct. 12, 1974, 49-117520
Int. Cl.² G02B *21/06*
U.S. Cl. 350—87 **6 Claims**

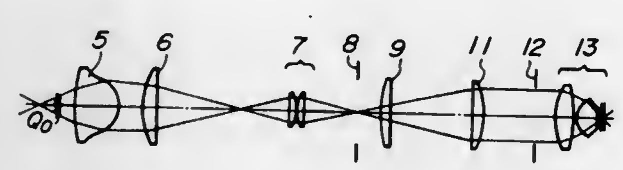

1. A transmitted illumination device for a microscope comprising from a light source to a test piece, a collector lens, a front detachably mounted additional system, a field stop, a rear lens system, an aperture stop and a condenser lens, said front detachably mounted additional system consisting of two air spaced front and rear components, said front component being a convex lens convex toward the front and said rear component being a convex lens system adjoining said field stop and having conjugate positions located at said field stop and at a position between said front and rear components, respectively, said rear lens system consisting of a front component composed of a fixed convex lens adjoining said field stop and a rear component air-spaced from said fixed convex lens and composed of a detachably mounted convex lens, said front additional lens system being removed from the illumination device and said rear component of said rear lens system being inserted thereinto when operated at low magnification, both said front additional lens system and said rear component of said rear lens system being inserted thereinto when operated at high magnification, the image of said light source projected onto said aperture stop with sizes corresponding to desired magnifications and the image of said field stop being projected onto an object surface by means of said rear lens system.

4,063,798
REFLECTIVE, RAT-TRAP BICYCLE PEDAL
Carlton P. Pawsat, Maysville, Ky., assignor to Wald Manufacturing Co., Inc., Maysville, Ky.
Continuation of Ser. No. 548,274, Feb. 10, 1975, abandoned. This application Aug. 23, 1976, Ser. No. 716,542
Int. Cl.² G02B *5/12*
U.S. Cl. 350—99 **10 Claims**

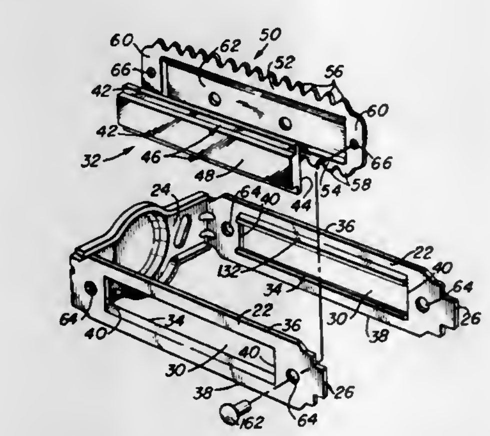

1. A rat-trap reflector pedal comprising:
a. a pedal frame having a pair of elongate, laterally spaced side legs each having spaced, parallel, upper and lower edges and each having an elongate aperture therein intermediate the upper and lower edges thereof;
b. a reflector having a reflective surface disposed within the aperture of each of said side legs;
c. a pair of combination rat-trap-tread and reflector retainer members having serrated upper and lower edges and disposed along an on opposite sides of an intermediate portion of the pedal frame side legs, wherein the said upper and lower serrated edges are spaced apart by a dimension greater than the spacing between the upper and lower edges of the side legs of the pedal frame, said members engaging and retaining the reflectors in place in the respective pedal frame apertures, and
d. means securing said members, one each, to a side leg of the pedal frame with the serrated edges thereof projecting outwardly beyond the respective upper and lower edges of the side leg of the pedal frame, whereby the pedal frame may be made with a bright finish, and the combined reflector-retainer and rat-trap-tread members separately finished as desired for attachment to the pedal frame.

4,063,799
PHOTOGRAPHIC IMAGING
Kenneth L. Bernstein, Framingham; Philip S. Considine, Woburn, and George B. Parrent, Jr., Carlisle, all of Mass., assignors to Technical Operations, Incorporated, Boston, Mass.
Filed Oct. 23, 1965, Ser. No. 505,312
Int. Cl.² G02B *5/18;* G09C *1/00*
U.S. Cl. 350—162 SF **3 Claims**

1. An optical method of coding and decoding comprising:
a. Illuminating an original object with incoherent light having a spectral width at least as narrow as 400 angstroms so that modulated light passes from said object;
b. Phase-shifting said modulated light in a Fourier transform plane according to a complex function having the property that only pi phase-shift differences are introduced between points introducing different phase-shift or the phase-shift introduced conforms with the symmetric functions $\Phi(x,y) = \Phi(-x, -y)$ where:
Φ= the phase-shift introduced at each point and
x and y = Cartesian coordinates at each point

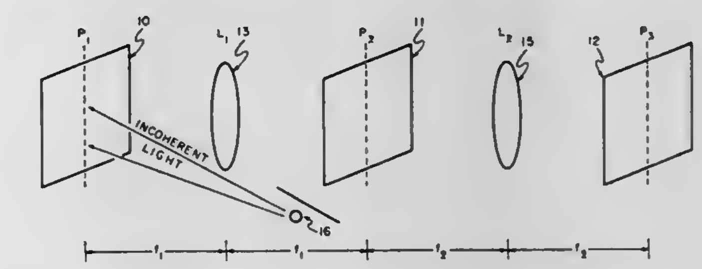

c. Making a visible recording of an image of said object containing aberrations introduced by said phase-shifting in an image plane;
d. Illuminating said recording with coherent collimated quasi-monochromatic light so that modulated light passes from said recording;
e. Phase-shifting the modulated light passing from said recording in a Fourier transform plane according to a complex function derived from the auto-convolution of the function used in making said recording; and
f. Intercepting an image of said recording in an image plane with said aberrations removed.

4,063,800
ZOOM LENS FOR A PROJECTOR
Yutaka Iizuka, Yokohama, and Soichi Nakamura, Kamakura, both of Japan, assignors to Nippon Kogaku K.K., Tokyo, Japan
Filed Dec. 19, 1975, Ser. No. 642,603
Claims priority, application Japan, Dec. 28, 1974, 50-1296
Int. Cl.² G02B *15/14*
U.S. Cl. 350—184 **2 Claims**

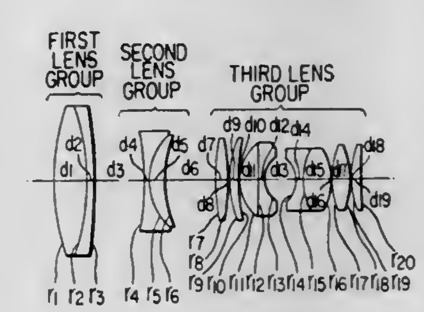

1. A zoom lens system for a projector comprising three groups of lens oriented as follows in a direction from the object side:
a. a first lens group having a composite converging function and including a doublet consisting of a first positive lens and a first negative lens;
b. a second lens group located between the other groups and movable along the optical axis of the system relative to the other groups for varying magnification, the second group having a composite diverging function, and including a doublet consisting of a second negative lens and a second positive meniscus lens; and
c. a third lens group having a composite converging function, and including a third biconvex positive lens; a fourth positive lens; a forward meniscus lens consisting of a fifth positive lens joined to a third negative lens, the convex surface of the forward meniscus lens facing the object; a rearward meniscus lens consisting of a fourth negative lens joined to a sixth positive lens, the concave surface of

the rearward meniscus lens facing the object; a seventh biconvex positive lens; and an eighth positive lens.

4,063,801
TELEPHOTO TYPE OBJECTIVE
Hideo Yokota, Tokyo, Japan, assignor to Canon Kabushiki Kaisha, Tokyo, Japan
Filed July 26, 1976, Ser. No. 708,302
Claims priority, application Japan, Aug. 5, 1975, 50-95119
Int. Cl.² G02B *9/60*
U.S. Cl. 350—216 13 Claims

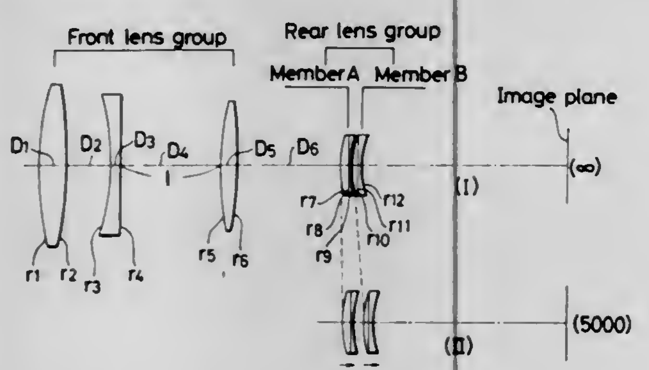

1. A telephoto type objective comprising:
a front lens group having a positive refracting power and which remains stationary during focusing, said front lens group being comprised of a plurality of lens members, and
a rear lens group having a negative refracting power and positioned on the image side of said front lens group in axial alignment therewith, said rear lens group including at least two movable lens members arranged to be moved in the same direction along the common optical axis toward the image plane when the object distance is changed in focusing from infinitely distant object to close object with the resulting speed of movement of the front one of said two movable lens members being different from that speed of movement of the rear one.

4,063,802
TELEPHOTOGRAPHIC LENS SYSTEM HAVING SHORT TOTAL LENGTH
Toshihiro Imai, and Yoshitsugi Ikeda, both of Hachiouji, Japan, assignors to Olympus Optical Co., Ltd., Tokyo, Japan
Filed July 14, 1976, Ser. No. 705,173
Claims priority, application Japan, July 18, 1975, 50-87186
Int. Cl.² G02B *13/02*
U.S. Cl. 350—223 5 Claims

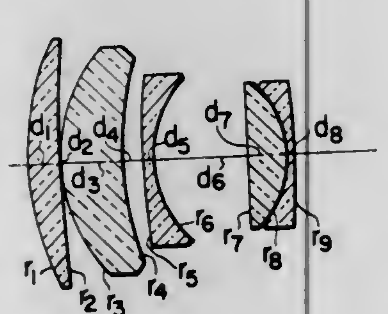

1. A telephotographic lens system comprising a first positive meniscus lens component, a second positive meniscus lens component, a third negative meniscus lens component and a fourth positive cemented lens component, and said lens system satisfying the following conditions:

(1) $0.4f < f_{12} < 0.5f$
(2) $4 < f_{123}/f_{45} < 6$
(3) $0.28f < r_3 < 0.35f$
(4) $0.6f < r_4 < 0.75f$
(5) $1.4f < r_5 < 2f$
(6) $0.18f < r_6 < 0.24f$
(7) $0.98 < |r_6/r_8| < 1.03$
(8) $1.3f < r_7 < 1.8f$
(9) $1.68 < n_1, n_4$
$1.6 < n_2$
(10) $1.05 < n_4/n_5$
(11) $10 < \nu_5 - \nu_4$
(12) $45 < \nu_1, \nu_2$
$\nu_3 < 28$

wherein the reference symbol f represent the focal length of the entire lens system, the reference symbol f_{12} designates the total focal length of the first and second lens components, the reference symbol f_{123} denotes the total focal length of the first through the third lens components, the reference symbol f_{45} represents the focal length of the fourth lens component, the reference symbols r_3 through r_8 designate radii of curvature on the surfaces of the second and third lens components as well as object side surface and cemented surface of the fourth lens component, the reference symbols n_1, n_2, n_4 and n_5 denote refractive indices of the first and second lens components as well as the two lens elements of the fourth lens component, and the reference symbols ν_1 through ν_5 represent Abbe's numbers of respective lens elements.

4,063,803
TRANSMISSIVE END SEAL FOR LASER TUBES
David L. Wright, Palo Alto, and John P. Goldsborough, San Jose, both of Calif., assignors to Spectra-Physics, Inc., Mountain View, Calif.
Filed June 3, 1976, Ser. No. 692,858
Int. Cl.² H01S *3/02*
U.S. Cl. 350—319 10 Claims

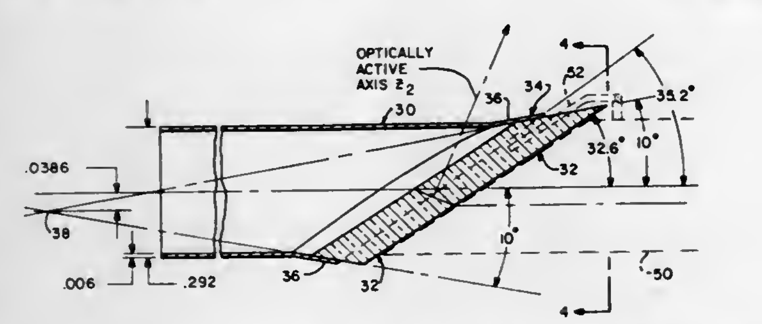

1. In a transmissive end seal and window for a laser plasma tube; bell means having an opening in one end of said tube and having a surface about said opening in the form of (a conically and) an outwardly facing opening (flare) flared portion adapted to receive a light transmissive window therein, window means adapted to be placed into said flared end of said bell means for forming sealing engagement therewith in closed relation against the surface thereat, said window means having a peripheral surface shaped to conform with and to mate with the outwardly flared portion of said bell so that said bell means and said window, when urged together, lie in contact therebetween throughout the closed path defined by said flared portion, glass frit forming a thin bond between said window and said end bell means about said path, said members being attached by being urged together in the presence of said frit and subjected to high temperature baking so as to melt said glass, which is thereafter cooled, said window means being constructed of a material having a high purity crystalline structure undamaged by, and transmissive to the radiation developed within said plasma tube, said window means having enhanced thermal conductivity due to its crystalline structure.

4,063,804
OPTICAL HARMONIC MICROSCOPE ASSEMBLY AND EXAMINATION METHOD
Robert W. Hellwarth, Los Angeles, and C. Paul Christensen, Jr., Venice, both of Calif., assignors to The University of Southern California, Los Angeles, Calif.
Filed May 29, 1975, Ser. No. 582,046
Int. Cl.² G02B *21/00*
U.S. Cl. 350—320 9 Claims

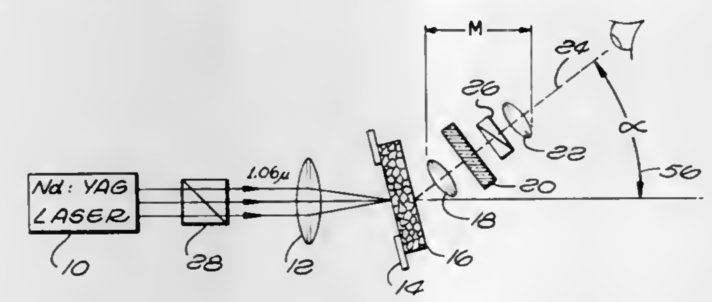

1. A method for microscopically examining a specimen formed of material which is relatively transparent to a predetermined fundamental frequency and to at least one harmonic of said fundamental frequency, said specimen having spatial modulation of its nonlinear susceptibility whereby to project harmonic light of impinging lased light at an angle which depends at least upon the frequency of said lased light, comprising:
supporting said specimen on a specimen stage of a microscope, said microscope being formed to be optically operational with light of said harmonic frequency and including as its optical system, an objective lens constituted of material which is inert to lased coherent light of said fundamental frequency, an eyepiece, and a body member defining an optical path between said objective lens and said eyepiece;
generating lased, coherent light of at least said fundamental frequency;
thereafter, focusing said lased coherent light as an incident beam onto said specimen to illuminate part of said specimen;
after generating said lased light, adjusting said optical system to focus said microscope on said illuminated part of said specimen and to dispose said optical path and said incident beam at a desired relative angle in a range of angles which is at least as broad as the range 0-90° whereby said optical system produces an image of structure of said specimen defined by a harmonic of said fundamental frequency, said harmonic being produced at said structure; and
blocking light of said fundamental frequency from traveling to said eyepiece.

4,063,805
OPHTHALMIC MEASURING INSTRUMENT
Marc Jay Gannon, 24035 Wimbledon, Shaker Heights, Ohio 44122, and Daniel Lee Gunter, 1774 Fairview Shores Drive, Orlando, Fla. 32804
Filed June 17, 1976, Ser. No. 697,036
Int. Cl.² A61B *3/10;* G01C *5/00*
U.S. Cl. 351—6 16 Claims

1. An instrument for measuring a dimension between an object being viewed, comprising focusing means for viewing said object at a given distance, a pair of mirrors arranged in a common plane on an angle facing said object, one of said mirrors being fixed relative to said object, the other of said mirrors being rotatable relative to said one mirror, the image of said object being divided into a split image upon rotation of said other mirror out of planar relationship with said one mirror, means for rotating said other mirror, and means for correlating the relative degree of rotation of said other mirror to the dimension being measured.

13. A method of making a measurement of an object between points on opposite edges of said object, comprising the steps for providing a whole reflected image of said object upon a pair of coplanar contiguous mirrors, such that the juncture between the mirrors is in alignment with said points, rotating

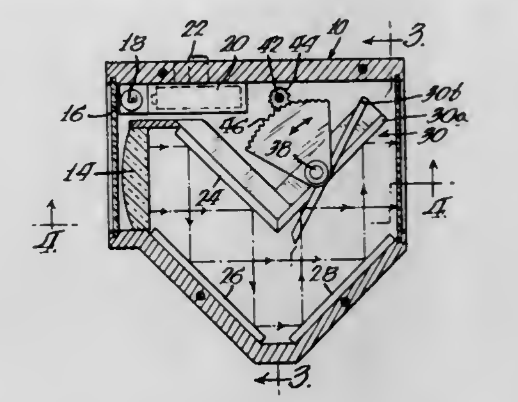

one of said mirrors while holding the other mirror fixed until the image is split and said opposite edges coincide, and measuring the degree of rotation of said one mirror in correlation with units of measure.

4,063,806
COAXIAL OPHTHALMOSCOPE ARRANGEMENT
Allan D. LeVantine, Tarzana, Calif., assignor to Cavitron Corporation, New York, N.Y.
Continuation-in-part of Ser. No. 441,951, Feb. 13, 1974, Pat. No. 3,984,157. This application July 19, 1976, Ser. No. 706,488
The portion of the term of this patent subsequent to Oct. 5, 1993, has been disclaimed.
Int. Cl.² A61B *3/12*
U.S. Cl. 351—9 18 Claims

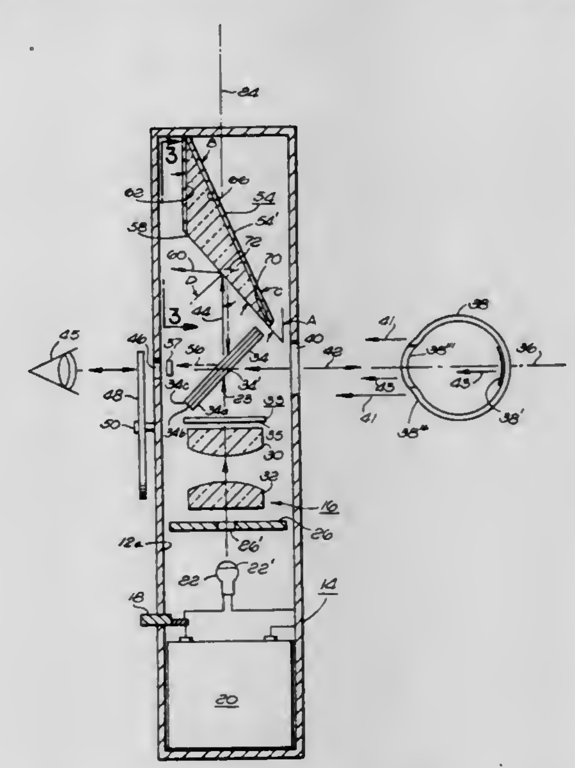

1. In a coaxial ophthalmoscope of the type in which the viewing axis is coaxially aligned with a beam of light directed into the eye under examination the improvement comprising:
light beam generating means for generating a beam of visible light in a first direction along a first axis;
beam splitter means spaced from said light beam generating means and positioned to intercept said beam of light and reflect a first preselected amount thereof in a second direction, different from said first direction, along a viewing axis, and transmit a second preselected amount of said beam of visible light therethrough along said first axis;
light trap means spaced from said beam splitter means and comprising a first planar surface means free of light absorbing coating thereon spaced from said beam splitter means and positioned at a predetermined angle to said first axis to receive said second preselected amount of said

beam of light transmitted through said beam splitter means, and said light trap means for preventing substantially all of said second preselected amount from reflecting along said viewing axis;

means for directing said first preselected amount of said beam of light into an eye under examination;

means for viewing said eye under examination through said beam splitter along said viewing axis;

wherein a first portion of said first preselected amount of light is reflected from the cornea of said eye under examination through said beam splitter means and toward said means for viewing said eye under examination, and a second portion of said first preselected amount of light is reflected from the retina of said eye under examination through said beam splitter means toward said means for viewing said eye under examination;

a first polarizer means having a first polarizing direction and positioned in said first axis intermediate said light beam generating means and said beam splitter means for polarizing said beam of light in said first direction;

a second polarizer means having a second polarizing direction and positioned in said viewing axis intermediate said means for viewing said eye under examination and said beam splitter means for filtering out said first portion of said first preselected amount of light and allowing said second portion of said first preselected amount of light to pass therethrough.

13. A light trap means comprising, in combination:

an optically transparent body member having:

a first planar surface for receiving a beam of light, and said first planar surface oriented at a first preselected angle to the direction of said beam of light;

a base planar surface substantially parallel to the direction of said beam of light and intersecting said first planar surface at a first edge;

an outer planar surface intersecting said base planar surface at a second edge and defining a second preselected angle therewith and intersecting said first planar surface at a third edge to define a third preselected angle therewith; and

a pair of spaced apart substantially parallel planar side surfaces intersecting said base planar surface, said outer planar surface, and said first planar surface.

4,063,807

PERIMETRIC EYE TESTING DEVICE

Siegfried Gelius; Hanne-Lore Wieczorek; Adolf Triller, all of Munich, and Nils Nielsen, Raubling, all of Germany, assignors to Optische Werke G. Rodenstock, Germany

Filed Feb. 20, 1976, Ser. No. 659,787

Claims priority, application Germany, Feb. 22, 1975, 2507723; Nov. 25, 1975, 2552839

Int. Cl.^{2} A61B *3/02, 3/04*

U.S. Cl. 351—24 **9 Claims**

1. In a perimetric eye examination device including a viewing area in the form of a hemispherical inner surface, a plurality of light sources of small surface area disposed in said surface, and capable of being activated in groups or individually, and a fixation point in said surface, the improvement comprising each of said light sources including light-emitting diodes, and luminous density control means for changing the brightness impression of the light-emitting diodes, said control means comprising current pulse means for supplying current pulses of uniform amplitude and at a pulse repetition frequency greater than the flicker frequency to each of said light-emitting diodes,

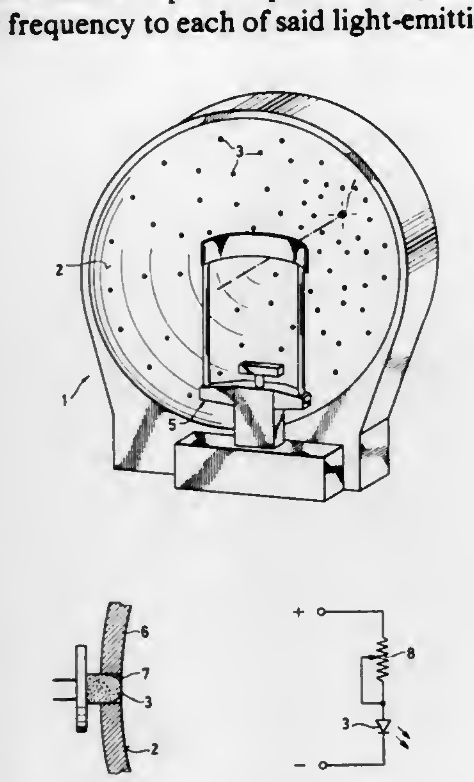

and means for varying the pulse width repetition ratio of said current pulses supplied to said light-emitting diodes.

4,063,808

APPARATUS FOR NEUTRALIZING TONER IN A NO CHARGE EXCHANGE TRANSFER

Henry Wellington Simpson, Boulder, Colo., assignor to International Business Machines Corporation, Armonk, N.Y.

Filed Mar. 23, 1976, Ser. No. 669,545

Int. Cl.^{2} G03G *15/16*

U.S. Cl. 355—3 TR **11 Claims**

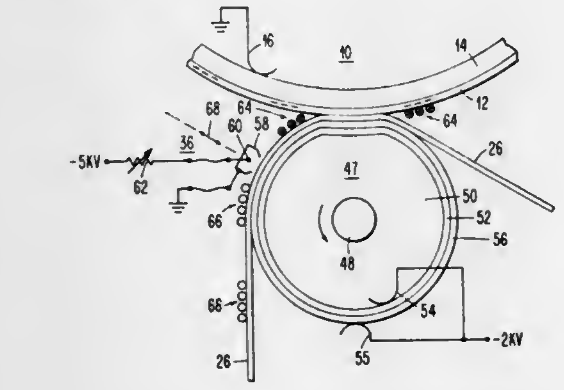

8. In a xerographic copying process having a no-charge-exchange transfer roller with an electric field emanating therefrom for transferring toner particles from a photoconductor to a copy web, the improvement comprising;

means for neutralizing the toner particles to substantially zero net charge;

said neutralizing means being mounted adjacent the toner image side of the copy web after the copy web has left the nip between the transfer roller and the photoconductor and before the copy member has left the influence of the electric field from the transfer roller.

4,063,809

PHOTOCONDUCTOR SUPPORT DRUM FOR PHOTOCOPY MACHINE

Ernst Schrempp, Norwalk, and Henry S. Hazelton, Jr., Fairfield, both of Conn., assignors to Pitney-Bowes, Inc., Stamford, Conn.

Continuation of Ser. No. 544,193, Jan. 27, 1975, abandoned. This application Sept. 27, 1976, Ser. No. 726,899

Int. Cl.^{2} G03G *15/00*

U.S. Cl. 355—3 DR **13 Claims**

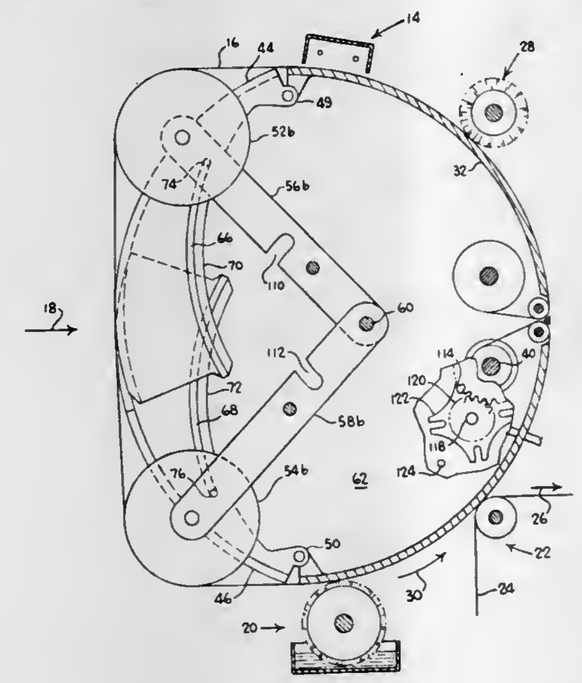

1. In a photocopy machine which utilizes a web photoconductor for making copies of a document by exposing a portion of the photoconductor to a full frame, short duration, high illumination intensity image of the document to produce an electrostatic latent image of the document on the photoconductor which is developed by the application of developer material which in turn is transferred to copy paper, apparatus for handling the photoconductor web comprising:

a. a hollow drum mounted in the photocopy machine for rotation therein to bring successive portions of the drum surface into operative relationship with copying instrumentalities arranged in a substantially circular path around the drum surface;

b. a single photoconductor web supported by and extending around the drum surface;

c. supply means and takeup means for said photoconductor web mounted for rotation within said drum;

d. slit means formed in said drum closely spaced relationship through which said photoconductor extends from said supply means to said drum surface and from said drum surface to said take-up means after said photoconductor web passes around said drum surface;

e. first means movably mounted on said drum and normally positioned to define a portion of said drum surface and to maintain said photoconductor web in a circular configuration, said first means being movable to a collapsed position in which said portion of said drum surface is non-circular;

f. second means movably mounted within said drum and normally positioned to be out of supporting relationship with said photoconductor web, said second means being movable to an extended position in which said second means supports a portion of said photoconductor web in a flat planar configuration, and

g. actuating means operable to move said first and second means simultaneously from said normal positions to said collapsed and extended positions respectively when said drum reaches a predetermined point of rotation; whereby at said point of rotation said flat portion of said photoconductor web can be exposed to a full frame, short duration, high illumination intensity image of a document.

4,063,810

COLOR TRANSPARENCY REPRODUCING MACHINE

Louis D. Mailloux, Fairport, N.Y., assignor to Xerox Corporation, Stamford, Conn.

Division of Ser. No. 540,617, Jan. 13, 1975, Pat. No. 4,027,962. This application July 16, 1976, Ser. No. 706,102

Int. Cl.^{2} G03G *15/01*

U.S. Cl. 355—4 **2 Claims**

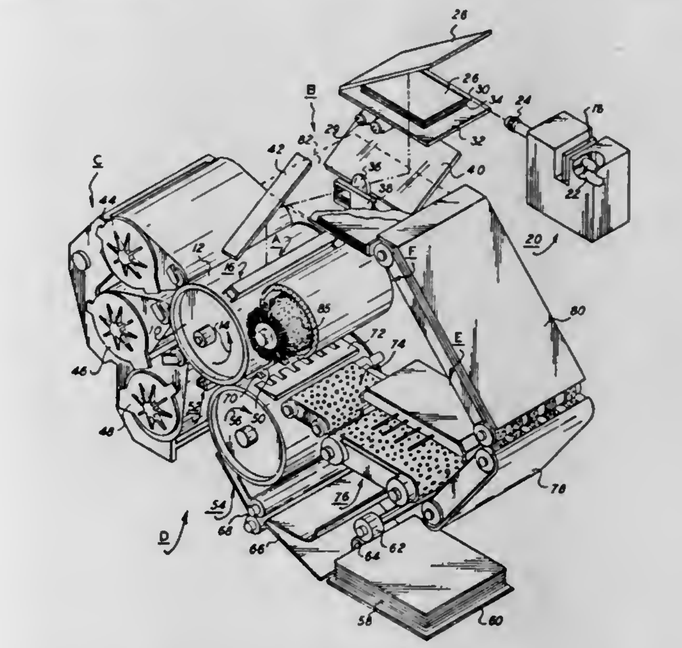

1. An electrophotographic printing machine for reproducing a color transparency, including:

a platen;

means for projecting a light image of the color transparency onto said platen;

a screen member disposed on said platen for modulating the light image of the color transparency projected onto said platen to form a half-tone light image thereof;

a composition frame disposed on said platen defining an opaque border extending outwardly from the color transparency image formed on said platen;

a photoconductive member;

means for charging at least a portion of said photoconductive member, said charging means comprising an elongated shield defining an open ended chamber, a pair of spaced, substantially parallel conductive coronode wires mounted in said shield, said pair of coronode wires extending substantially in a longitudinal direction along the length of said shield, and a plurality of spaced, substantially parallel grid wires mounted in said shield and extending substantially in a longitudinal direction along the length thereof, said plurality of grid wires partially enclosing the open end of said shield with one of said coronode wires being disposed in the chamber therebeneath and the other of said coronode wires being disposed in the unenclosed portion of the chamber of said shield;

means for filtering the half-tone light image

means for exposing the charged portion of said photoconductive member to a light image of said composition frame and the filtered half-tone light image of the color transparency to record on said photoconductive member a combined electrostatic latent image of the color transparency and said composition frame;

means for developing the electrostatic latent image recorded on said photoconductive member with toner particles complementary in color to the color of the filtered half-tone light image;

means for transferring the toner powder image adhering to the combined electrostatic latent image recorded on said photoconductive member to a sheet of support material; and

means for fusing the toner powder image to the sheet of support material.

4,063,811
ELECTROPHOTOGRAPHIC COPIER
Kuniki Seino, Kawasaki, and Shoji Kondo, Tokyo, both of Japan, assignors to Minolta Camera Kabushiki Kaisha, Japan
Filed Apr. 9, 1976, Ser. No. 675,345
Int. Cl.² G03G *21/00*
U.S. Cl. 355—15 **3 Claims**

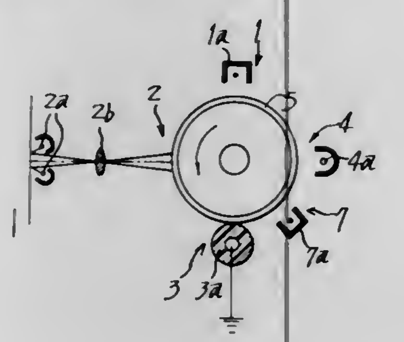

1. An electrophotographic copier comprising;
a rotatable photosensitive member which exhibits a hysteresis effect in which the photosensitivity of the photosensitive member when exposed by an image exposing means varies in accordance with the variance of the surface potential of the member at the start of light decay by an erasing lamp;
means disposed around said photosensitive member in the following order and including;
a first corona discharger for charging said photosensitive member uniformly with charges of a specific polarity to a predetermined surface potential;
means for exposing an image corresponding to an original onto the uniformly charged photosensitive member;
image transfer means for transferring the image on the photosensitive member onto a copy material;
a second corona discharger for uniformly charging the photosensitive member with charges of a polarity the same as the polarity of the charges of said first corona discharger and to a potential substantially the same as the potential applied by said first corona discharger;
an erasing lamp for erasing charges on the photosensitive member;
whereby said second corona discharger guarantees a high and constant photosensitivity of the photosensitive member by preventing variances of the photosensitivity of the photosensitive member at image exposure by said image exposing means.

4,063,812
PROJECTION PRINTING SYSTEM WITH AN IMPROVED MASK CONFIGURATION
Gerard Abraham, Versailles, and Gaston Bergasse, Melun, both of France, assignors to International Business Machines Corporation, Armonk, N.Y.
Filed Aug. 12, 1976, Ser. No. 713,948
Int. Cl.² G03B *27/00, 27/28*
U.S. Cl. 355—18 **8 Claims**

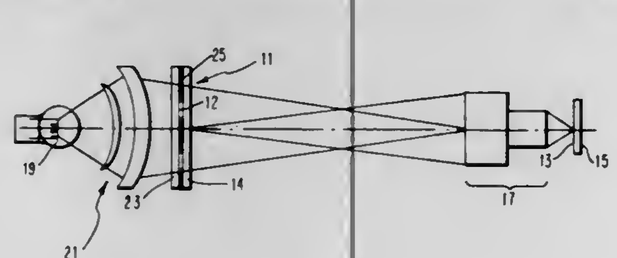

8. A projection printing system for forming an image on a light sensitive substrate, which system includes a mask having a pattern of opaque and transparent areas and means to prevent damage and contamination to said pattern, an illuminating system for directing light through the mask to the light sensitive substrate, and an optical means for forming a focussed image of the mask pattern on the light sensitive substrate, said means to prevent damage and contamination to said pattern including transparent layers encasing said pattern, with the distances that the outer surfaces of said transparent layers are spaced from said pattern being such that the images of any dirt particles on said surfaces are maintained out of focus so that the dirt particle images will not be printed on the light sensitive substrate.

4,063,813
METHOD FOR EXPOSING A LIGHT SENSITIVE MEMBER
Yoshikazu Tamura, Ebina, Japan, assignor to Fuji Xerox Co., Ltd., Tokyo, Japan
Filed Feb. 10, 1976, Ser. No. 656,877
Claims priority, application Japan, July 24, 1976, 51-89646
Int. Cl.² G03B *27/32, 27/54*
U.S. Cl. 355—77 **1 Claim**

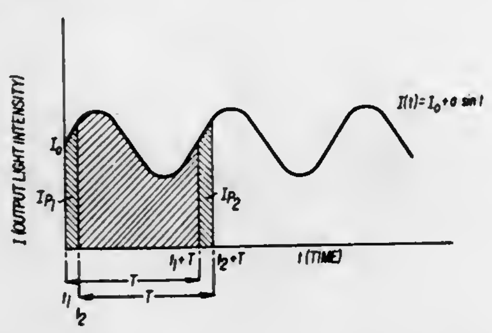

1. A method of exposing a light sensitive member with a discharge lamp energized by an alternating electrical current; said method comprising substantially exposing each point on the light sensitive member for a length of time substantially equal to an integral multiple of the period of the periodic output variations of the discharge lamp by relatively moving a shield member having a slit therein with respect to said light sensitive member where

$l = v \cdot n$ To and
$l =$ the width of the slit
$v =$ the relative velocity between the shield member and the light sensitive member
$To =$ the period of said periodic output variations of the discharge lamp; and
$n =$ any positive integer.

4,063,814
OPTICAL SCANNER
David B. Rhodes, Yorktown, Va., assignor to The United States of America as represented by the Administrator of the National Aeronautics and Space Administration, Washington, D.C.
Filed Apr. 6, 1976, Ser. No. 674,195
Int. Cl.² G01P *3/36;* G02B *17/00*
U.S. Cl. 356—28 **2 Claims**

1. An optical scanner for sequentially focusing a light beam at preselected points in space comprising:
means for producing a light beam;
a scanning wheel having several windows in it positioned such that as the scanning wheel is rotated, said light beam will sequentially pass through said windows;
said scanning wheel having spaces between each pair of adjoining windows which will not pass light whereby when said scanning wheel is rotated said light beam is blocked for a short interval of time between transmissions through successive windows;
each of said windows including means for displacing the emerging light from the incident light by an amount different from the displacements for all other windows;
means for rotating said scanning wheel;
means for bringing said light beam to a primary LV focus before it passes through a window in said scanning wheel;

means for bringing said light beam to a secondary LV focus after it has passed through a window in said scanning wheel; and

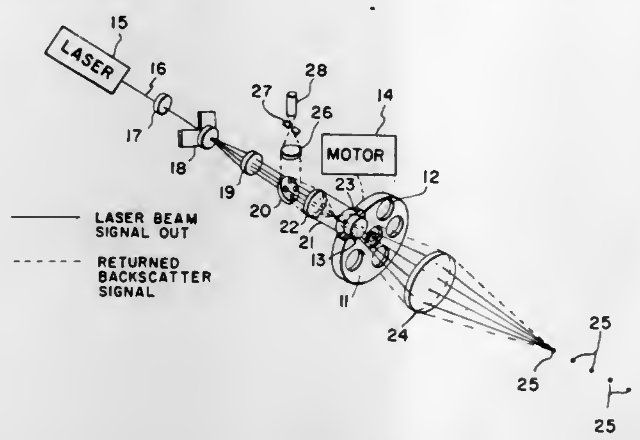

means for detecting the light energy reflected from the point of said secondary LV focus back through the window that the light beam passed through.

4,063,815
APPARATUS AND METHOD FOR OPTICAL TRACKING AND AIMING
Joachim Wilken, Karlsruhe; Karl-Heinz Wiemer, and Harald Kauer, both of Ettlingen, all of Germany, assignors to Dr. -Ing. Ludwig Pietzsch, Ettlingen, Germany
Filed Mar. 22, 1976, Ser. No. 669,173
Claims priority, application Germany, Mar. 27, 1975, 2513760
Int. Cl.² F41G *1/40*
U.S. Cl. 356—29 **5 Claims**

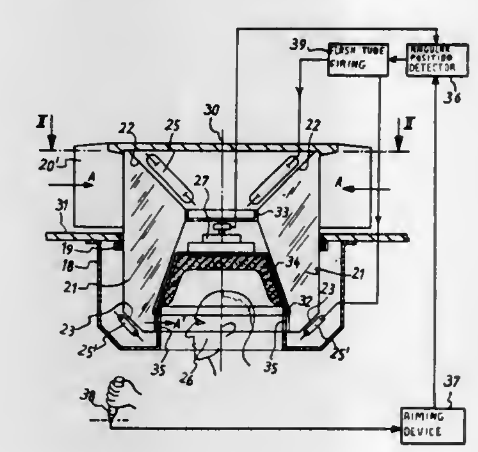

1. An apparatus for optically tracking an object and indicating the alignment of an aimable device including:
viewing means for making visual observations of the object, said means having a field of vision;
a sighting mark superimposed on the field of vision; and,
means for operatively coupling said sighting mark and aimable device so that the position of said sighting mark on the field of vision corresponds to the alignment of the aimable device, said viewing means including a plurality of periscopic deflection viewing devices radially distributed about a center of observation and rotated about the center of observation at a speed exceeding the temporal resolving power of the human eye in order to transmit an image of the object to a protected position.

4,063,816
CHEMICAL REACTION VELOCITY MEASURING APPARATUS
Nobuo Itoi, Zushi; Teruo Shimamura, Yokosuka; Yoshio Fukami, Yokohama; Hidetoshi Mori, Kawasaki, and Kenji Miwa, Chigasaki, all of Japan, assignors to Nippon Kogaku K.K., Tokyo, Japan
Filed Dec. 16, 1975, Ser. No. 641,264
Claims priority, application Japan, Mar. 3, 1975, 50-24976
Int. Cl.² G01J *3/42, 3/46;* G01N *21/22*
U.S. Cl. 356—93 **10 Claims**

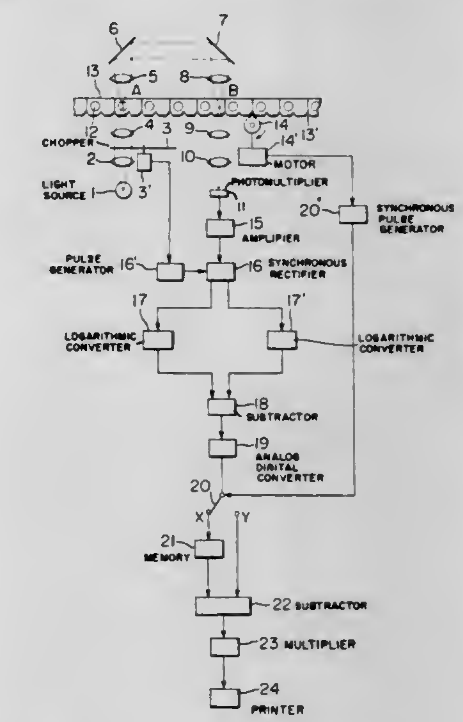

1. Apparatus for measuring the velocity of a chemical reaction by detecting the changes in light absorbance of samples in which said reaction is taking place, said apparatus comprising:
a. means for generating a first light beam of a wavelength (λ_1) and a second light beam of a wavelength (λ_2) alternately;
b. means for holding said samples in a line so that the samples are spaced by a predetermined distance;
c. means for directing said two light beams along one light beam path;
d. means for intermittently moving said holding means in one direction across first and second portions of the light path at the same time,
said moving means producing alternately at each resting state a first condition in which a new sample is in said first portion of the light path and a spaced portion of said holding means between two samples already exposed to said light beam in the first portion thereof is in said second portion, and a second condition in which a new portion of the holding means between two samples is in said first portion and a sample already exposed to said light beam in the first portion thereof is in said second portion.
each sample exposed to the light beam in said first portion becoming exposed to the beam in said second portion after lapse of a constant time interval,
e. means for detecting alternately at each resting state a first signal corresponding to the light absorbance of each sample when said each sample and spaced portion are exposed to said first light beam, and a second signal corresponding to the light absorbance when said each sample and each spaced portion are exposed to said second light beam,
f. a first signal subtraction device connected with said detecting means to produce a differential signal between said each first and second signals at each resting state;
g. a signal memory device connected to said first subtraction device to memorize first differential signals which are produced from said subtraction device in said first condition, said memory device being capable of storing a given number of the first differential signals in sequence and for

successively reading out the earliest applied signal as each new signal is applied thereto, and

h. a second subtraction device connected with the first subtraction device to receive second differential signals which are produced from said first subtraction device in said second condition and connected with said memory to produce a differential signal between each first differential signal and each second differential signal corresponding to the change in light absorbance of each sample at said time interval.

4,063,817

CHEMICAL REACTION VELOCITY MEASURING APPARATUS

Teruo Shimamura, Yokosuka; Yoshio Fukami, Yokohama, and Hidetoshi Mori, Kawasaki, all of Japan, assignors to Nippon Kogaku K.K., Tokyo, Japan

Filed Dec. 16, 1975, Ser. No. 641,267

Claims priority, application Japan, Dec. 26, 1974, 50-148386

Int. Cl.[2] G01J *3/42, 3/46*; G01N *21/22*

U.S. Cl. 356—93 **17 Claims**

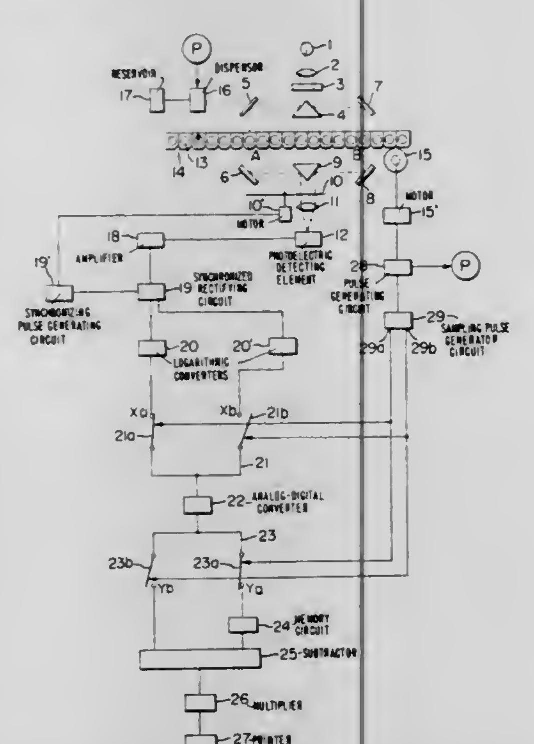

1. Apparatus for measuring the velocity of a chemical reaction by detecting changes in light absorbance proportional to time comprising: means for maintaining a plurality of samples at regular spaced intervals, means intermittently advancing said samples at constant intervals relatively to first and second exposure stations, detection means including colorimetric sample exposure means and a detector for detecting the light absorbance of said samples upon exposure, said exposure means including means simultaneously exposing the samples at said first and second stations, means transmitting absorbance signals alternately from the exposed samples to said detector, and means for determining the reaction velocity of each sample from the difference of light absorbance measurements thereof detected at the times of exposure of each sample at said two different stations, said apparatus further including reflecting means arranged to direct absorbance light signals from said stations to said detector and means provided between said reflecting means and said detector alternately to permit said absorbance signals from said first and second stations to reach said detector.

4,063,818

MONOCHROMATOR HAVING A TOROIDAL HOLOGRAPHIC DIFFRACTION GRATING AND UTILIZABLE IN THE ULTRAVIOLET BAND

Didier Lepere, Sevres, France, assignor to Instruments S.A., Ivry-sur-Seine, France

Filed Apr. 23, 1976, Ser. No. 679,870

Claims priority, application France, Apr. 28, 1975, 75.13209

Int. Cl.[2] G01J *3/18*

U.S. Cl. 356—100 **1 Claim**

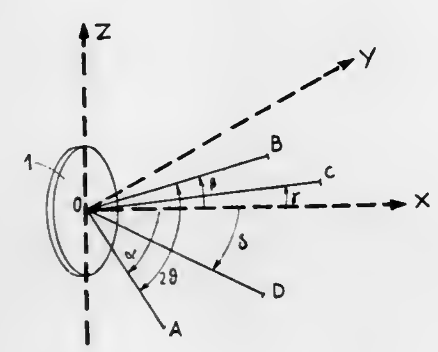

1. In a monchromator usable at a wavelength λ in the region of ultraviolet light and having a fixed inlet slot, a holographic grating, a concave turnable support carrying said grating and a fixed outlet slot, an improvement wherein the surface of the support of the holographic grating is a concave portion of a toroidal surface, taken at the external periphery of the toroid, and disposed symmetrically with respect to the equatorial plane of the toroid, said equatorial plane containing the point sources C,D for recording the holographic grating at a wavelength of λo, and the conjugated source-image points A,B, the coordinates of said points A,B,C and D in polar terminology in an XYZ system in which XOY is the equitorial plane being l_A,α:l_B,B; l_C, γ; and l_D, δ; said coordinates being obtained by successively minimizing the terms T,A, and C_1 given hereafter wherein T is a term of defocalization, A is astigmatism and C_1 is coma,

$$\sin\gamma - \sin\delta = N\lambda_\sigma$$

$$T = \frac{\cos^2\alpha}{l_A} - \frac{\cos\alpha}{R^1} + \frac{\cos^2\beta}{l_B} - \frac{\cos\beta}{R^1} -$$

$$\frac{K\lambda}{\lambda_o}\left[\frac{\cos^2\gamma}{l_C} - \frac{\cos\gamma}{R^1} - \left(\frac{\cos^2\delta}{l_D} - \frac{\cos\delta}{R_1}\right)\right] = \Sigma$$

$$A = \frac{1}{l_A} - \frac{\cos\alpha}{P} + \frac{1}{l_B} - \frac{\cos\beta}{P} -$$

$$\frac{K\lambda}{\lambda_o}\left[\frac{1}{l_C} - \frac{\cos\gamma}{P} - \left(\frac{1}{l_D} - \frac{\cos\delta}{P}\right)\right] = \Sigma$$

$$C_1 = \frac{\sin\alpha}{l_A}\left(\frac{\cos^2\alpha}{l_A} - \frac{\cos\alpha}{R^1}\right) + \frac{\sin\beta}{l_B}\left(\frac{\cos^2\beta}{l_B} - \frac{\cos\beta}{R^1}\right)$$

$$- K\frac{\lambda}{\lambda_o}\left[\frac{\sin\gamma}{l_C}\left(\frac{\cos^2\gamma}{l_C} - \frac{\cos\gamma}{R^1}\right) -\right.$$

$$\left.\frac{\sin\delta}{l_D}\left(\frac{\cos^2\delta}{l_D} - \frac{\cos\delta}{R^1}\right)\right] = \Sigma$$

wherein:

R^1 is the radius of the outer surface of the toroid at the equitorial plane, and

p is the radius of curvature of the toroid.

4,063,819

HIGH ENERGY LASER POINTING AND TRACKING SYSTEM UTILIZING BEAM ANGLE/FOCUS DITHER METHOD OF OPERATION

Cecil L. Hayes, Placentia, Calif., assignor to The United States of America as represented by the Secretary of the Air Force, Washington, D.C.

Filed Aug. 27, 1976, Ser. No. 718,272

Int. Cl.[2] G01B *11/26*

U.S. Cl. 356—152 **2 Claims**

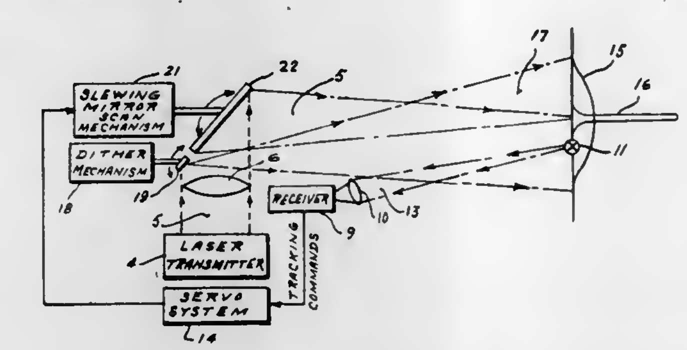

1. The method of operating a high energy laser pointing and tracking system having a high energy laser beam source, a slewing mirror for directing the laser beam generated thereby and a reflected beam energy detecting means, said method comprising the steps of

positioning a small aperture mirror proximate said slewing mirror and in intercepting relationship with said laser beam,

scanning said small aperture mirror in substantially the same plane as said slewing mirror,

intensity modulating the portion of laser beam transmitted by said small aperture mirror by induced beam angle dither,

demodulating reflected beam energy received by said reflected beam detecting means to provide phase error signals, and

controlling the direction of said slewing mirror by means of an error detecting servo system, said servo system being responsive to said phase error signals.

4,063,820

APPARATUS FOR MEASURING A DIMENSION OF AN OBJECT

William Anthony Borgese, Willingboro, N.J., assignor to RCA Corporation, New York, N.Y.

Filed Nov. 10, 1975, Ser. No. 630,649

Int. Cl.[2] G01B *11/04*

U.S. Cl. 356—167 **2 Claims**

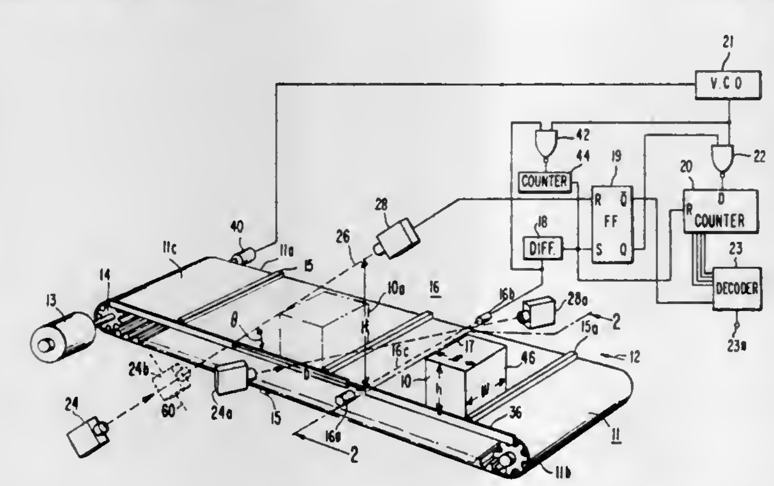

1. Apparatus for measuring the height dimension of a linearly moving right parallelepiped object positioned oblique relative to its direction of movement, where said dimension is in a direction normal to the direction of movement and said movement is at a known velocity, comprising in combination,

means for directing a narrow beam of electromagnetic wave energy at an acute angle relative to the direction of said dimension and for scanning said beam back and forth in a plane which forms said acute angle said beam being oriented such that is is intercepted by said object during the course of its movement;

transducer means positioned to sense said beam for producing a signal indicative of any interruption of said beam by said object;

reference means positioned to detect an edge of said object having said dimension to produce a signal indicative thereof; and

timing means responsive to said edge detecting signal and to said transducer signal for producing a further signal the characteristic of which is determined by the time lapse between the two received signals which time lapse corresponds directly to said height dimension to be measured.

4,063,821

GAS DETECTOR TUBE READER

Charles A. King, Vienna, and George E. Dyche, Centreville, both of Va., assignors to General Kinetics, Incorporated, Rockville, Md.

Filed July 19, 1976, Ser. No. 706,568

Int. Cl.[2] G01B *11/02*

U.S. Cl. 356—167 **13 Claims**

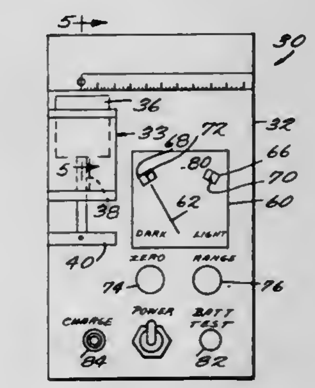

1. For reading the length of stain from a gas detector tube which tube includes a transparent, elongated tubular sidewall having an inlet end and an outlet end and having a filling of indicator-bearing, gas porous material which is specific to a looked-for constituent in the sense that said material turns color progressively along the tube when exposed to a gas including the constituent as a sample of the gas is drawn through the tube, so that a distinct end of stain is first produced at the end of said filling of indicator-bearing, gas porous material nearest the inlet end of the tube and until the constituent is exhausted a stain front progresses along said filling of the tube toward the outlet end of the tube, a gas detector tube reader, comprising:

a housing having:

a. means for releasably clamping an individual gas detector tube and for permitting the tube while clamped to be moved longitudinally;

b. an illuminated lamp and means for directing illumination thereof in a beam transversally upon an axial section of the tube while clamped;

c. a photoelectric cell aligned with said beam transversally opposite the location of said illuminated axial section, and means for substantially confining the access of light to the photoelectric cell to such light of said beam as is transmitted generally transversally through the tube;

d. a meter electrically connected to the photoelectric cell and constructed to provide an output proportional to the light reaching the photoelectric cell;

e. first mark means on the housing coincident from the standpoint of an observer before the reader with the longitudinal axis of said beam;

f. second mark means on the meter, intermediate the two extremes of meter output characteristic of most stained and least stained sections of the tube being read,

whereby the length of stain of the gas detector tube being read may be measured as the distance along the tube length from

said first mark means to the distinct end of stain, when the tube has been slid longitudinally until the meter output coincides with said second mark means.

4,063,822

SYSTEM FOR DETECTING A FIRST LIGHT TRANSMISSIVE SUBSTANCE, SUCH AS FOR INSTANCE BLOOD, IN A SECOND LIGHT TRANSMISSIVE, DIFFERENT SUBSTANCE

Leendert Pieter deJong, Reeuwijk, and Jan Davidse, Rotterdam, both of Netherlands, assignors to Staalkat B.V., Aalten, Netherlands

Filed Mar. 29, 1976, Ser. No. 671,140

Claims priority, application Netherlands, Apr. 4, 1975, 7504011

Int. Cl.[2] G01J *3/42;* **G01N** *33/08*

U.S. Cl. 356—179 **10 Claims**

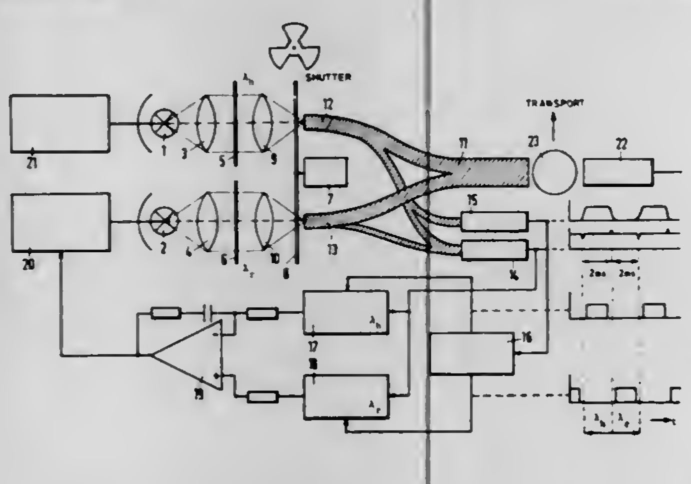

1. A detection system for automatically detecting a first light transmissive substance in a second and different light transmissive substance, comprising light emitting means for alternately producing light beam flashes of light having a first wavelength and light having a second wavelength; support means for temporarily supporting a volume containing said first and said second substance respectively in the light beam path; optoelectric detecting means for converting light beam flashes directed along said light beam path into corresponding electrical voltages; an electrical detecting arrangement comprising means for producing a first voltage proportional to the ratio between light transmitted through said volume under inspection at said first wave-length and light transmitted through said volume under inspection at said second wave-length, and means for producing a second voltage proportional to the product of a detection threshold and the quotient of light transmitted directly (in the absence of said volume in front of said opto-electrical detector) to said opto-electric detecting means at said first wavelength and light directly transmitted to said opto-electric detecting means at said second wavelength; and comparator means for comparing said first voltage and said second voltage for providing a decision signal indicating whether or not the ratio between the transmission through said volume under inspection at said first wavelength and the transmission through said volume at said second wavelength exceeds said detection threshold.

4,063,823

WORKPIECE, AND CONTAINER AND CONTENTS, INSPECTING APPARATUS AND METHOD

Felix R. Grat, Lake Hiawatha, N.J., assignor to Rame-Hart, Inc., Mountain Lakes, N.J.

Filed Dec. 14, 1976, Ser. No. 750,460

Int. Cl.[2] G01N *21/24*

U.S. Cl. 356—197 **17 Claims**

1. An improved apparatus for inspecting translucent-body containers, and fluent materials contained within such containers, having means for disposing a translucent-body container having fluent material therewithin in an attitude for illumination thereof from an external light source, having a source of light, and further having means for directing light from said source onto a fluent-material-containing, translucent-body container disposed therefor by said container disposing means, to cause illumination of both said container and fluent material therewithin, wherein the improvement comprises:

said light source comprises means restricting illumination of

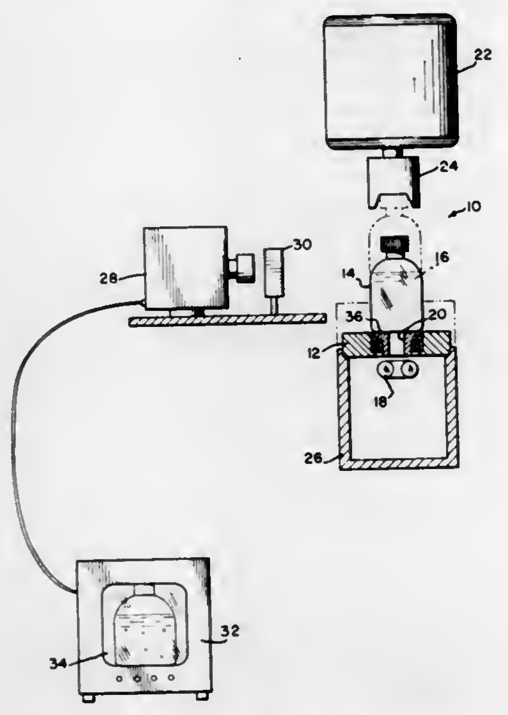

a fluent-material-containing, translucent-body container to only approximately 0.05 foot-candle, to minimize undue surface reflection and light scattering, and further comprises means providing illuminative radiation in which a substantial portion thereof is within a range of approximately from 4900 to 5800 Angstrom units.

4,063,824

CHEMICAL DOSIMETER HAVING A CONSTANT FLOW AIR SAMPLING PUMP

W. Barry Baker, Newark, and Donald G. Clark, Wilmington, both of Del., assignors to E. I. Du Pont de Nemours and Company, Wilmington, Del.

Filed Aug. 5, 1975, Ser. No. 602,093

Int. Cl.[2] F04B *49/00*

U.S. Cl. 417—43 **10 Claims**

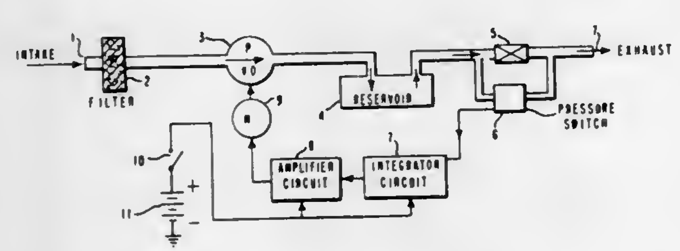

1. An improved dosimeter for individual use that has an electric motor, a power source, an exhaust port and a filter means in which particles or vapors present in an air stream being pumped through the dosimeter are collected on the filter means; the improvement in use therewith comprises

- a variable drive pump tubularly connected to the filter means and coupled to the electric motor draws the air stream through the filter means;
- an air reservoir connected to the pump into which the air stream is being pumped retains excess air supplied by the pump and maintains a constant flow rate of the air stream;
- an orifice comprising an adjustable needle valve being positioned in a tube attached to the air reservoir and to the exhaust port, wherein the air stream is pumped through the orifice and thereby creates an air pressure drop;
- a differential pressure switch positioned in a tube connected to the exhaust port and in parallel to the orifice is activated by a change in the air pressure drop of the air stream and creates a low voltage electrical input signal;
- an integrator circuit electrically connected to a power source and to the pressure switch uses the low voltage input signal generated by the pressure switch and integrates this signal;
- an amplifier circuit electrically connected to the power source and connected in series to the integrator circuit and to the electric motor which amplifies the signal generated by the integrator circuit and feeds the amplified signal to the electric motor, thereby controlling the speed of the motor driving the pump in relationship to the signal generated by the pressure switch to maintain the air stream at a constant flow rate.

4,063,825

PUMPING APPARATUS PARTICULARLY FOR OIL WELLS

Jöel Chardonneau, Nantes, and Claude Sablé, Reze, both of France, assignors to Centre d'Etudes et de Realisations Industrielles de l'Atlantique C.E.R.I.A., Nantes, France

Filed June 6, 1975, Ser. No. 584,284

Int. Cl.[2] F04B *17/00*

U.S. Cl. 417—343 **5 Claims**

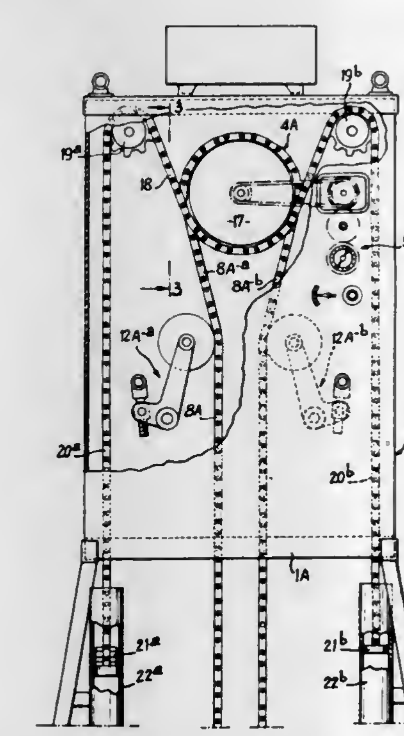

1. Balanced pumping apparatus for the extraction of fluid material, such as petroleum, from two wells comprising:

- shaft-mounted rotatable means positioned for rotation in a substantially vertical plane;
- flexible connection means passing over said rotatable means in operative relationship therewith and having downwardly extending ends located on opposite sides of the rotatable means;
- a train of rods connected to each end of the flexible connection means, said train of rods joined to pumps being located within respective wells and mounted for reciprocating vertical movement therein;
- means for rotating said rotatable means alternately in clockwise and counterclockwise directions whereby when one of said trains of rods is lifted by said flexible connection means, the other train of rods is lowered, the lifting of said one train of rods being aided by the weight of said other train of rods;
- additional shaft-mounted rotatable means operatively related to said first mentioned rotatable means; and
- a second flexible connection joined in operative relationship with said additional rotatable means and having unequal resistant devices secured to ends thereof which extend downwardly on opposite sides of the additional rotatable means.

4,063,826

FLEXIBLE, OSCILLATING BLADE LIQUID PUMP

Waldemar Riepe, Elsa-Brandstrom-Strasse 3, 4500 Osnabruck, Germany

Filed May 20, 1976, Ser. No. 688,295

Claims priority, application Germany, May 20, 1975, 2522309

Int. Cl.[2] F04B *17/00, 19/00*

U.S. Cl. 417—410 **12 Claims**

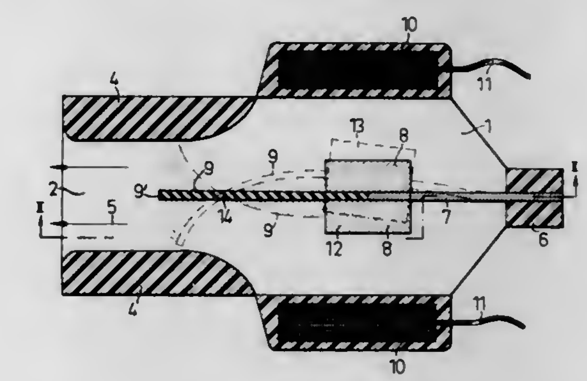

1. A liquid conveying pump, especially a resonance pump for aquariums, which includes: pump housing means, holding means connected to said housing means, resiliently flexible leaf spring means secured to and supported by said holding means, alternating current operable armature means supported by said leaf spring means and spaced from said holding means in axial direction of said leaf spring means for alternate oscillation toward one side and the opposite side of said pump housing, said pump housing means having liquid inlet means and passage means including liquid outlet means, and flexible thin-walled plate means connected to said armature means axially beyond the free end of said leaf spring means while extending into said passage means for alternately swinging toward one side and the opposite side of said passage means in synchronism with the oscillation of said armature means, said plate means having a considerably lower bending resistance than said leaf spring means, the plate means being made of rubber-like material the cross section of said passage means gradually narrowing from its inner end in the direction toward said liquid outlet means, said plate means extending substantially into said narrowing part of said passage means.

4,063,827

HAND-HELD APPLICATOR DEVICE FOR APPLYING A LIQUID LUBRICANT TO THE END PORTION OF A TUBE

Bengt Arne Persson, Djursholm, Sweden, assignor to B A Installationsutveckling AB, Djursholm, Sweden

Filed Apr. 27, 1976, Ser. No. 680,554

Claims priority, application Sweden, May 12, 1975, 7505455

Int. Cl.[2] A46B *11/00, 15/00*

U.S. Cl. 401—10 **5 Claims**

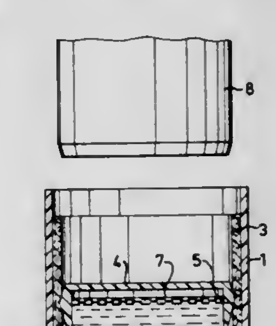

1. A hand-held liquid lubricant applicator device for applying a liquid lubricant to the surface of the end portion of a tube, said device comprising:

- an upwardly open, tubular container member for holding the liquid lubricant,
- an inverted, closed ended tubular insert member positioned within said tubular container member,

a tubular applicator positioned within said container member and between said container member and said insert member, and

circumferential flange means on one of said members and directed laterally towards said other member to compress said applicator between said members and within an narrow opening at a height above the level of the liquid carried by the container to provide an essentially closed reservoir for said liquid, preventing excess wetting of the applicator portion protruding from said opening and preventing spillage of liquid upon tipping of the container.

4,063,828
PLASTIC PENCILS
Atsuhiko Mukai, and Yoshio Mori, both of Sagamihara, Japan, assignors to Teijin Limited, Osaka, Japan
Continuation-in-part of Ser. No. 507,287, Sept. 19, 1974, abandoned, which is a continuation-in-part of Ser. No. 219,869, Jan. 21, 1972, abandoned. This application Sept. 16, 1975, Ser. No. 613,357
Claims priority, application Japan, Jan. 26, 1971, 46-2522; Jan. 28, 1971, 46-2947
Int. Cl.² B43K *19/02;* **C08L** *23/06*
U.S. Cl. 401—96 **3 Claims**

1. A plastic pencil comprising a writing core, a porous casing to enclose said writing core, and a coating which is coated on the surface of said porous casing, said casing being a homogeneous unitary mixture composed of 100 parts by weight of atactic polystyrene, 10–40 parts by weight of polyethylene, 10–55 parts by weight of glass fibers and the required amount of a coloring agent and having sharpenability comparable to that of incense cedar and a flexural modulus in excess of 30,000 kg/cm², and said coating being a homogeneous unitary mixture composed of 100 parts by weight of atactic polystyrene, 5–50 parts by weight of polyolefin and a required amount of a coloring agent.

4,063,829
FOUNTAIN BRUSH
Joseph L. La Mura, 367 Passiac Ave., West Caldwell, N.J. 07039
Filed Apr. 26, 1976, Ser. No. 680,106
Int. Cl.² B43K *5/16, 7/12*
U.S. Cl. 401—101 **7 Claims**

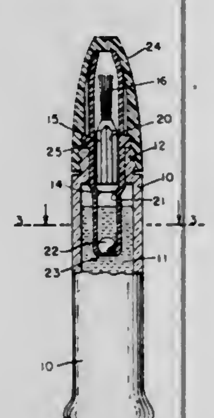

1. A fountain brush comprising a container defining a reservoir for the storage of liquid; a piston chamber having a brush end and a reservoir end and disposed at the upper end of and communicating with said container and having at its brush end a first valve defining first annular restricted opening; a second valve defining second annular constriction formed in said piston chamber between the ends thereof; a valve member vertically independently movable in said chamber between said second valve and the reservoir end of said chamber so that said valve member moves between a second valve engaging and closing position and a valve opening position spaced from said valve in response to the inverted and upright position of said fountain brush respectively and a brush member disposed within said piston chamber and having a length no greater than the distance between said first and second valves and including a brush support piston section proximate said second valve and an outer brush section proximate said first valve, said brush member being longitudinally movable between a retracted position with said brush member being fully housed within said chamber and disengaged from said first valve and an advanced position with said brush section projecting outwardly through said chamber brush end and the end of said piston proximate said brush section engaging said first valve, means to permit said valve member to move between its second valve open and closed positions independently of the position of said brush member.

4,063,830
LOCKABLE AND SEPARABLE PIVOTAL CONNECTOR JOINT
Stephan C. Ban, 9009 Mears St., Fairfax, Va. 22030
Filed July 28, 1976, Ser. No. 709,354
Int. Cl.² F16D *1/12*
U.S. Cl. 403—3 **4 Claims**

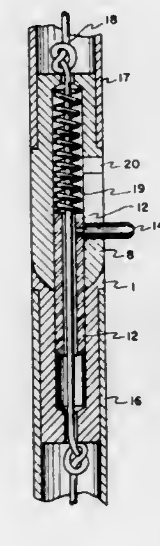

1. A hollowed connector joint for the rigid interconnection of a plurality of pole sections of the bungee cord variety wherein the hollow within said connector joint has a selected axial allignment common to the elemental pieces thereof when said pole sections are rigidly interconnected in a selected orientation of interconnected pole sections, and wherein a flexible resilient cord member of substantially uniform cross section is attached at opposite ends of the pole section assembly, said cord is normally under tension and said cord is threaded through said pole sections and through said hollowed connector joint, comprising:

a two piece connector joint assembly wherein first and second pieces are adapted for separation and for mating relation, and wherein the hollow within said first and second pieces of said connector joint assembly has a substantially uniform cross section, and;

a rigid tubular member disposed within the hollow of said connector joint assembly with said flexible cord member threaded therethrough;

said tubular member having a respective hollow configuration of uniform cross section compatible with said uniform cross section of said cord member and larger in dimensions with respect thereto such that said cord member is free to move within said tubular member;

said tubular member having an outer configuration compatible with the configuration of the cross section of the hollow within said connector joint assembly and smaller in dimensions with respect thereto such that said tubular member is moveable in contiguous relation within the hollow of said connector joint assembly when said pole sections are selectively oriented with respect each other such that the hollows in each of said first and second pieces of said joint assembly are in axial alignment;

said tubular member including restraint means adapted to limit the travel of said tubular member within said hollow of said connector joint assembly such that in a first position said tubular member is completely contained within one piece of said joint assembly and in a second position said tubular member is within both of said pieces of said connector joint assembly.

4,063,831
BOLTED JOINT
Paul Meuret, La Seyne-sur-Mer, France, assignor to Constructions Navales et Industrielles de la Mediterranee, Paris, France
Filed May 28, 1975, Ser. No. 582,414
Claims priority, application France, May 28, 1974, 74.18377
Int. Cl.² F16C *9/00*
U.S. Cl. 403—28 **16 Claims**

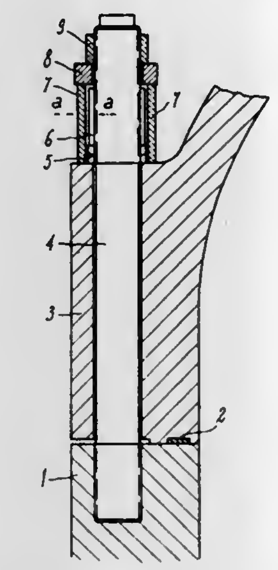

1. A system for securing a cover to and releasing such cover from a pressure vessel, said system comprising:

at least one stud bolt having a first end firmly securable in one of a vessel or a cover therefor, said stud bolt being dimensioned to extend through an aperture in the other of said vessel or said cover therefor, and said stud bolt having a second end positioned beyond said other of said vessel or said cover therefor when said stud bolt extends therethrough;

a clamping nut means threaded onto said stud bolt for pressing said other of said vessel or said cover therefor against said one of said vessel or said cover therefor;

a head firmly attached to said stud bolt at a position thereon outwardly of said clamping nut means; and

bolt stretching means, positioned between said head and said other of said vessel or said cover therefor, for expanding upon the application of heat thereto in a direction axial of said stud bolt and for thereby stretching said bolt and moving said clamping nut means away from said other of said vessel or said cover therefor, whereby said clamping nut means may be selectively tightened or loosened.

4,063,832
PARALLEL LINKAGE WITH PIVOTED TRANSLATING LINK
James J. Bauer, Lisbon, and Lonnie D. Hoechst, Gwinner, both of N. Dak., assignors to Clark Equipment Company, Buchanan, Mich.
Filed Nov. 26, 1975, Ser. No. 635,537
Int. Cl.² F16C *11/00*
U.S. Cl. 403—54 **4 Claims**

1. An improved linkage for transmitting linear motion between a linear motion causing means and a linear motion responsive means, the improvement wherein the motion causing means and the motion responsive means are on spaced paths and linear motion is transmitted along longitudinally and laterally extending paths comprising a first link connected to the motion causing means, a second link connected to the motion responsive means, both on longitudinally spaced paths, a bridging link extending between the two along the laterally extending path, a connection intermediate the ends of the bridging link, said bridging link being made of flat bar stock and said connection comprising a punched opening having curved sides in the lateral direction, a flat sided pin received in said opening

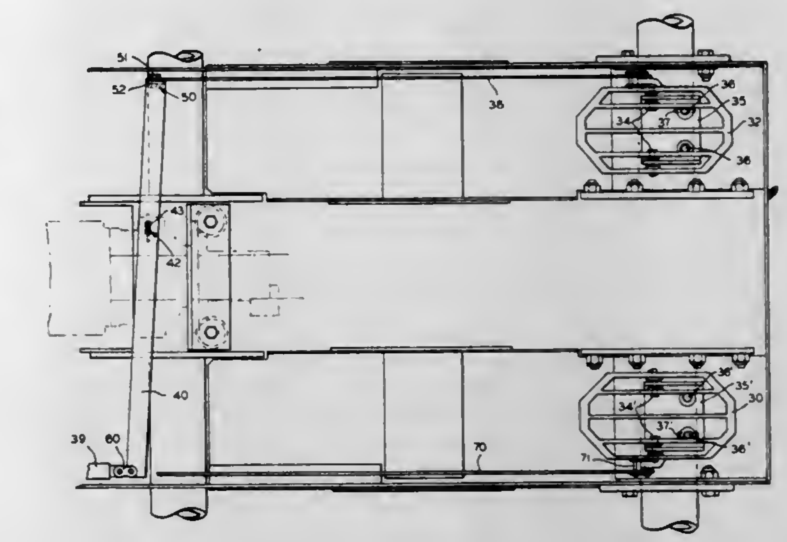

engaged with the curved sides of the opening in rolling antifriction contact, permitting the bridging link to swing between the first and second links, retaining said pin and opening and said links in engagement.

4,063,833
BOW ADJUSTER
Howard D. Strong, 119 Chardon Ave., Chardon, Ohio 44024
Filed May 17, 1976, Ser. No. 686,821
Int. Cl.² F16B *7/06*
U.S. Cl. 403—60 **4 Claims**

1. An adjuster for adjusting the length of a bow comprising:

an elongate threaded rod;

a cylindrical sleeve;

means for mounting said sleeve on said rod so that said sleeve extends coaxially about said threaded rod, wherein said mounting means includes a first bushing having a threaded bore that receives said threaded rod, said first bushing being force fit into said sleeve so as to be positioned adjacent a first end of said sleeve;

a swivel bracket rotatably mounted on said sleeve, the axis of rotation of said bracket being colinear with the longitudinal axis of said elongate threaded rod, wherein said swivel bracket includes a cylindrical portion having a circumferential groove, said cylindrical portion being received in the first end of said sleeve, said first end of said sleeve including bosses extending into said groove from the interior surface of said sleeve for retaining said cylindrical portion therein while allowing said bracket to rotate;

a second bushing, having a threaded bore that receives said threaded rod, said second bushing rigidly attached to the end of the bow, the end of the bow being telescopically received within a second end of the sleeve, said sleeve being rotatably so that said second bushing progresses along said threaded rod relative to said mounting means; and

an o-ring interposed between said sleeve and the end of bow so as to seal said adjuster, said o-ring comprised of a resilient material.

4,063,834

BALL JOINT ASSEMBLY

William Michael Hanson, and Basil Robert Price, both of Leamington Spa, England, assignors to Automotive Products Limited, England

Filed Mar. 29, 1977, Ser. No. 782,563

Claims priority, application United Kingdom, Apr. 2, 1976, 13360/76

Int. Cl.² F16C *11/06*

U.S. Cl. 403—138 **4 Claims**

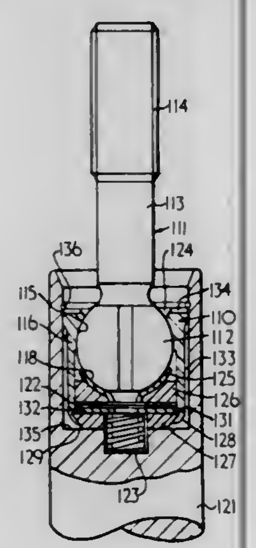

1. A ball joint assembly comprising:

a housing;

a socket member secured in the housing;

a ball pin received in the socket member, the ball pin comprising a shank and a head having a part-spherical surface thereon;

a first, annular, bearing surface in the socket member co-operating with said part-spherical surface and defining an aperture through which the shank of the ball pin extends;

a bearing member in the socket member co-operating with said part-spherical surface and having a second bearing surface thereon, said bearing member being movable towards said annular bearing surface in response to wear;

means non-releasably secured to the socket member adjacent said bearing member to prevent movement of said bearing member away from said annular bearing surface beyond a pre-set position;

and an anti-rattle spring acting between said housing and said bearing member to urge said bearing member towards said annular bearing surface and maintain said bearing surfaces in contact with the part-spherical surface of the ball pin.

4,063,835

FRAME CONSTRUCTION

Wallace T. Husband, West Vancouver, and Howard A. Larlee, Surrey, both of Canada, assignors to E-Z Rect-Metal Products Ltd., North Vancouver, Canada

Filed Jan. 27, 1977, Ser. No. 762,973

Int. Cl.² F16B *7/22, 9/02*

U.S. Cl. 403—252 **8 Claims**

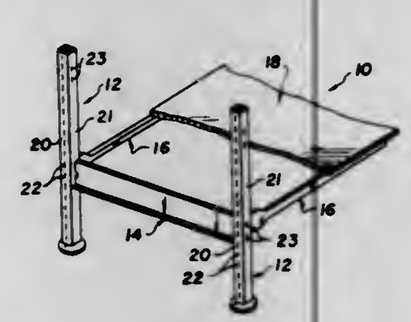

1. Frame construction comprising a first frame member having a side wall provided with a slot, a second frame member having an end edge, a hook on the end edge enterable through the slot to engage the side wall, said second frame member having an integral and coplanar locking tab at the end edge, said locking tab being bendable away from and substantially coplanar with the second frame member into the slot to prevent disengagement of the hook from the side wall.

4,063,836

FURNITURE CONNECTING MEANS

Vincent Militano, Massapequa, N.Y., assignor to Finkel Outdoor Products, Inc., Garfield, N.J.

Filed Mar. 2, 1977, Ser. No. 773,518

Int. Cl.² F16B *7/00*

U.S. Cl. 403—263 **8 Claims**

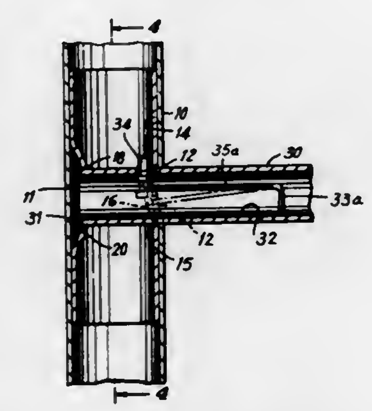

1. A hollow tubular first member having only one opening in a side wall thereof, a second hollow concentric tubular member removably positioned within the first member, having a first opening in a wall thereof coincident in size and shape with the opening in the side wall of the first member, a second opening in a wall of the concentric second member opposed to the first opening in the second member, and a cross-bracing member removably connected to the first member, the outer dimensions and shape of the end of which cross-bracing member register with the coinciding openings in the first and second members and pass through said openings, with the free end portion of the cross-brace received within the second opening in the second member along a chordal plane segmenting the side wall of the second member, and means on the second member supporting the end portion of the cross brace along said chordal plane.

4,063,837

PRESELECTED RELEASABLE THREADED COUPLING MEMBER

J. D. Ditson, Asbury, N.J., assignor to Ingersoll-Rand Company, Woodcliff Lake, N.J.

Division of Ser. No. 510,478, Sept. 30, 1974. This application Sept. 16, 1976, Ser. No. 723,811

Int. Cl.² B25G *3/00*

U.S. Cl. 403—307 **5 Claims**

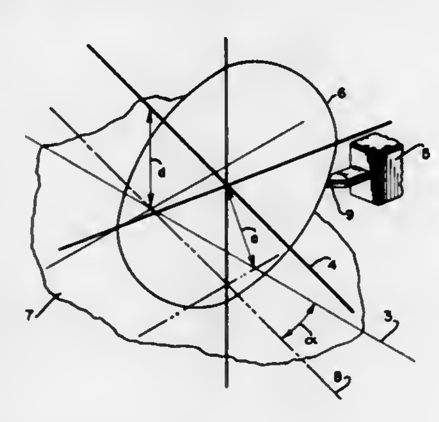

1. A threaded joint comprising:

two threaded members each with a thread form of the same hand of rotation and each having a different locking and clearance flank angle, the locking flank angle of one being equal to the clearance flank angle of the other, and coupled together by a third threaded coupling member having a continuous thread which mates with each of said two threaded members at one selectively accommodating end such that a predetermined one of said two threaded members of said threaded joint will selectively release upon application of torque to the joint in a direction opposite of that required to tighten the joint.

4,063,838

ROD CONSTRUCTION AND METHOD OF FORMING THE SAME

Vesta F. Michael, Big Spring, Tex., assignor to Fiber Glass Systems, Inc., Big Spring, Tex.

Filed May 7, 1976, Ser. No. 684,098

Int. Cl.² D02G *3/00;* **F16D** *1/00*

U.S. Cl. 403—343 **13 Claims**

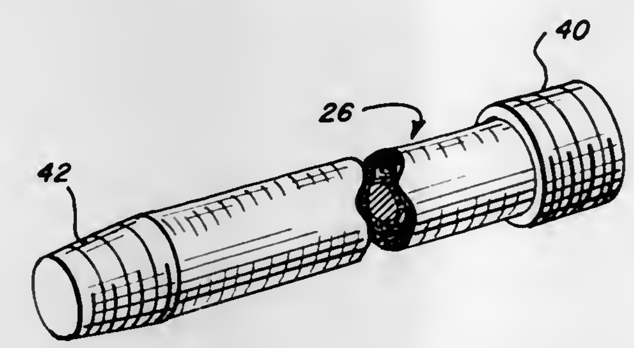

3. A solid reinforced rod construction substantially completely devoid of internal fissures and gaps and of high tensile strength comprising a discrete core of high tensile strength having a plurality of surface indentations, an integral shell encapsulating said core comprising a plurality of longitudinal glass filaments under tension arranged substantially uniformly about said core, parallel to the longitudinal axis of said core; a plurality of glass filaments arranged substantially transversely to said rod longitudinal axis urging said longitudinal strands under tension into said core indentations; said transversely arranged filaments being wound about the longitudinal axis of said rod in layers separated by longitudinal filament layers; each layer of transversely arranged filaments comprising two overlapping filament strata wound under tension about the longitudinal axis of said rod.

4,063,839

EXPANSION JOINT WITH ELASTOMER SEAL

Delmont D. Brown, North Baltimore, Ohio, assignor to The D. S. Brown Company, North Baltimore, Ohio

Filed July 28, 1975, Ser. No. 599,407

Int. Cl.² E01C *11/02*

U.S. Cl. 404—69 **8 Claims**

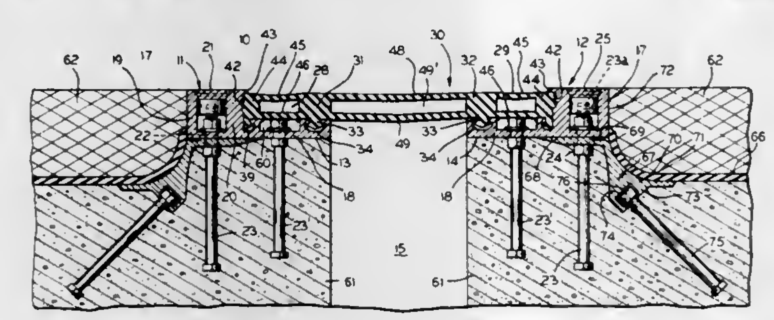

5. An expansion joint frame structure with an elastomer seal and tread comprising a pair of opposed, elongated, side frames adapted to be mounted on respective steps in the upper corners of a pavement or a bridge deck expansion joint, an elongated elastomer seal removably mounted on said side frames and extending therebetween, said side frames each having a bottom wall adapted to rest on a step in the pavement or bridge deck in the respective upper corners of the joint and further having a joint-remote, elongated segment of substantially rectangular transverse cross section with a longitudinal cavity of substantially rectangular cross section therein, the bottom side of said cavity having a first series of longitudinally spaced holes through which protrude respective threaded ends of downwardly extending anchor bolts, nuts threaded on respective threaded ends of said anchor bolts within said cavity, openings in the top wall of said cavity, which openings respectively are coaxial with and of larger diameters than said holes in said bottom side of said cavity, whereby access to said nuts with a wrench may be made through said openings, removable plug means respectively closing each of said openings, an elongated membrane-support member attached to and projecting laterally beyond the joint-remote longitudinal edge of each side frame, the laterally projecting part of said member comprising a diagonally depending, elongated body portion having a transversely concave upper surface adapted to support the joint-contiguous edge of a wter-impermeable membrane to be laid between the lower concrete layer and an upper wear course layer of concrete or asphalt and continued up to each of said side frames, each of said members having a longitudinal flange beneath the joint-remote longitudinal edge of the bottom wall of respective side frames, said flange having a series of longitudinally spaced holes aligned with said first series of longitudinally spaced holes, the threaded ends of said first-mentioned anchor bolts also extending through the respective holes in said flange, and nuts threaded on said bolts to mount the flange of each member rigidly on respective side frames.

4,063,840

EXPANSION JOINT SEAL ASSEMBLY

Gary L. Fordyce; Richard D. Hein, both of Wabash, Ind.; Fred V. Sandels, Hartville, and James E. Britton, Akron, both of Ohio, assignors to The General Tire & Rubber Company, Akron, Ohio

Filed Mar. 9, 1977, Ser. No. 775,819

Int. Cl.² E01C *11/12*

U.S. Cl. 404—69 **5 Claims**

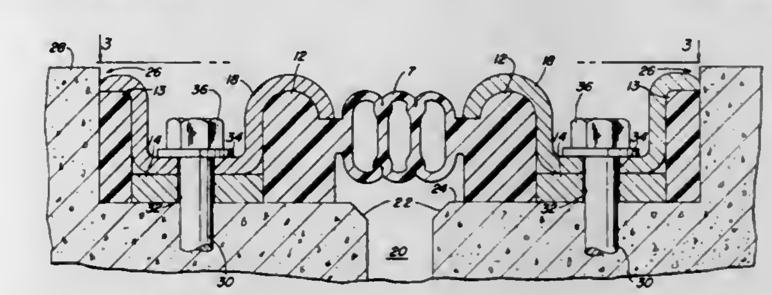

1. An expansion joint seal assembly for sealing the gap between adjacent deck sections, comprising:

a. an elongated body of elastomeric material having two elongated compression pads extending along each side of said elongated body and an elongated flexible sealing section connected between said compression pads, each of said compression pads being designed for placement on one of said deck sections on the opposite side of said gap from the other of said compression pads, with said flexible sealing section spanning said gap,

b. each of said compression pads having a bottom surface designed for sealing engagement with the deck section on which the pad is placed, and also having two spaced apart, upwardly extending longitudinal ribs on the topside of the pad,

c. at least one metal insert member extending through each of said compression pads between said longitudinal ribs,

d. at least one metal cover plate placed on top of each said compression pads, each of said cover plates extending over the ribs of its associated compression pad and over the metal insert member located between said ribs,

e. a fastener designed to be secured to said deck section and extending up through holes in said metal insert member and said metal cover plate, said fastener having means for holding said metal cover plate pressed against said ribs of

said compression pad to secure said compression pad to said deck section, with said bottom surface of said compression pad in firm sealing engagement with said deck section.

4,063,841
INDEXABLE INSERT FOR GROOVING TOOLS
Joseph Niman, Jr., Sterling Heights, Mich., assignor to Posa-Cut Corporation, Sterling Heights, Mich.
Filed July 8, 1976, Ser. No. 703,485
Int. Cl.² B26D *1/00, 1/12*
U.S. Cl. 407—70 15 Claims

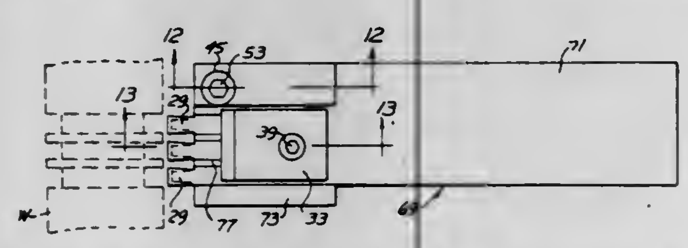

9. In an indexable insert grooving tool having a shank having spaced ends, with a longitudinal axis and at one end mountable in a slide, and a head on the other end of said shank and laterally displaced therefrom, said head having a flat top surface coplaner with said axis;

there being a pocket in said head below said top surface including a pair of bottom edges and a back up wall, said bottom edges defining an included obtuse angle of 140° approximately and whose one side defines said back up wall;

one bottom edge being inclined upwardly and inwardly into said head below said top surface and the other bottom edge being shorter than said one bottom edge and terminating at the side of the head below said top surface;

and an indexable insert snugly nested within said pocket bearing against said back up wall and secured therein;

said insert including a body of general rectangular cross section and having spaced ends;

a normally flat top surface along one edge of said body coplaner with said head top surface;

and a pair of angular bottom surfaces extending from a central point of the body and inclined toward and extending to adjacent said top surface at an included obtuse angle corresponding to the angle between said pocket bottom edges, said bottom surfaces terminating in end faces which extend to and define with said top surface a pair of separately usable transverse cutting edges at opposite ends of the body, said body adapted for snug registry within said pocket, one end of said insert projecting laterally of said head adapted to cut an annular groove within the bore of a workpiece rotating on an axis corresponding to the axis of said shank.

13. In the grooving tool of claim 9, additional spaced indexable inserts nested and secured within said pocket, parallel to and spaced from said insert; and spacers between said inserts; the securing of said inserts within said pocket including a clamp secured upon said head and bearing against the top edges of said inserts; and a cam locking device secured upon said head bearing against the outer of said inserts securing all inserts against said back up wall.

4,063,842
ADJUSTABLE BORING BAR
George G. Barkley, New Alexandria, and Edward L. Sorice, Crabtree, both of Pa., assignors to Kennametal Inc., Latrobe, Pa.
Filed Apr. 9, 1976, Ser. No. 675,322
Int. Cl.² B23B *29/02*
U.S. Cl. 408—146 5 Claims

1. An adjustable head for a boring bar comprising; a tool shank, a tool unit slidably mounted in a perforation in said tool shank, means for adjusting said tool unit axially along said perforation, an axially extending slot formed on said tool unit and having substantially parallel radially inner walls and inwardly converging radially outer walls, a clamp member having first means for engaging the inner wall and second means for engaging the outer walls, said clamp member being posi-

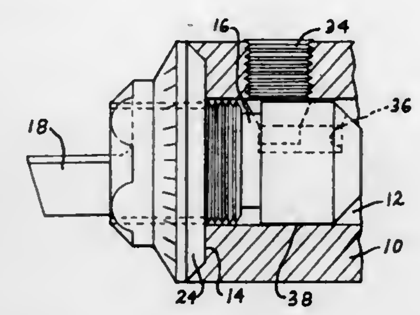

tioned between said tool shank and said tool unit so that the first means engages only the radially inner walls in a first position, and in a second position said clamp member first means engages said radially inner walls and said second means engages said radially outer walls in a second position.

4,063,843
ADJUSTABLE BORING BAR
George G. Barkley, New Alexandria; John A. Cmar, Jr., and Howard J. McCreery, both of Latrobe, all of Pa., assignors to Kennametal Inc., Latrobe, Pa.
Filed June 21, 1976, Ser. No. 697,846
Int. Cl.² B23B *29/12*
U.S. Cl. 408—146 5 Claims

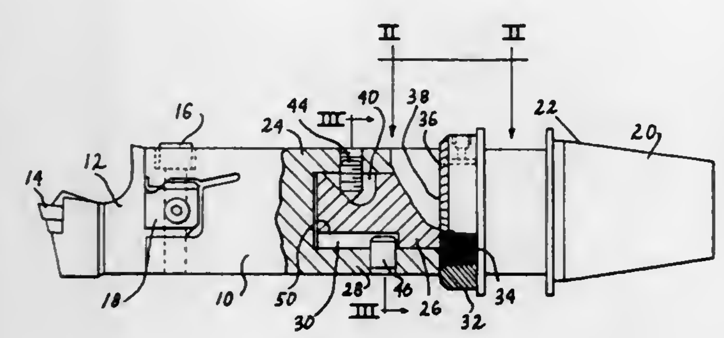

1. A shank for a boring bar comprising; first and second members having end portions telescopically engaged, one of said first and second members having an opposite end for supporting a cutting insert and having its end portion telescopically engaged over the other of said first and second members, means for holding said first and second members nonrotatable relative to each other, axially adjustable abutment means interengaged between said first and second members operable to axially move one member relative to the other, a recess formed on the outer face of the innermost telescopically engaged end portion, said recess having a declining surface in the direction of said axially adjustable abutment means, a clamp element located and engaged in said outermost telescopically engaged end portion, said clamp element operable to be moved radially inward and engage said declining surface so that one of said first and second members is held firmly against said abutment means.

4,063,844
TAPPING T FOR PLASTIC PIPE
Thomas Pessia, Bradford, Pa., assignor to Dresser Industries, Inc., Dallas, Tex.
Continuation of Ser. No. 496,501, Aug. 12, 1974, abandoned. This application Feb. 20, 1976, Ser. No. 659,810
Int. Cl.² B23B *41/08;* F16L *41/04*
U.S. Cl. 408—204 10 Claims

1. In a tapping T for non-metallic plastic pipe including a threaded main body portion defining an axis of rotation, wrench engaging means formed on one end of said body and

an at least substantially continuous circularly tubular metallic cutting nose at the other end of said body, the improvement comprising an end face on said cutting nose having a generally blunt cutting edge with a planar portion normal to said axis extending substantially throughout the cutting nose and opera-

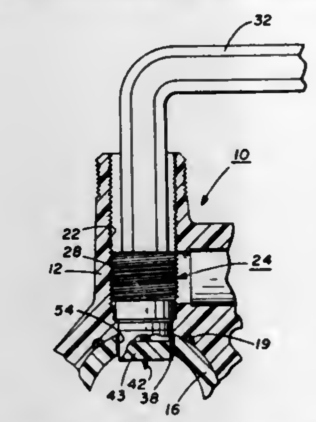

tively adapted to effect pipe wall penetration throughout its at least substantially continuous periphery, said end face in a circumferentially continuous direction having successively stepped portions axially relieved from said planar portion in a repetitive control pattern about the periphery thereof.

4,063,845
TURBOMACHINE STATOR INTERSTAGE SEAL
Robert L. Allen, Greenwood, Ind., assignor to General Motors Corporation, Detroit, Mich.
Continuation-in-part of Ser. No. 583,548, June 4, 1975, abandoned. This application Oct. 13, 1976, Ser. No. 732,285
Int. Cl.² F01D *25/26, 9/00;* F04D *29/40;* F16J *15/48*
U.S. Cl. 415—134 3 Claims

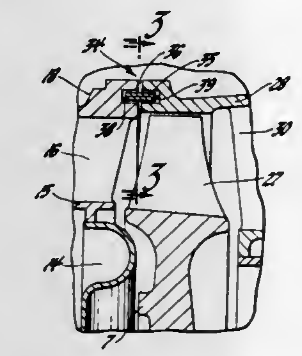

1. A turbine stator comprising, in combination, an annular upstream shroud having a continuously circumferentially formed downstream edge; an annular downstream shroud coaxial with the upstream shroud having a continuously circumferentially formed upstream edge confronting the downstream edge of the upstream shroud; said downstream edge being axially spaced from said upstream edge throughout the full circumferential extent of both said downstream and upstream edges to form an open gap extending radially therebetween continuously circumferentially therebetween; the confronting edges of the shrouds defining opposed grooves in the confronting edges; and seal ring means operable to oppose gas flow through the gap between the shrouds, the seal ring means being a thin flexible coiled metallic strip extending substantially twice around the axis of the shrouds and axially across the gap and within the grooves to provide two layers, the layers being mutually slidable to accommodate relative radial expansion of the shrouds and strip for seating of a surface of the strip radially against the shrouds.

4,063,846
PUMP IMPELLER IMPROVEMENT
Lawrence G. Eagle, Tulsa, Okla., assignor to Borg-Warner Corporation, Chicago, Ill.
Filed Nov. 13, 1974, Ser. No. 523,394
Int. Cl.² F04D *29/44, 13/08*
U.S. Cl. 415—199.2 3 Claims

1. In combination with a rotatable element mounted on an axially extending shaft and having an axially open-ended annular cavity defined in part by a substantially circular and axially extending outside rim, and a fixed member arranged adjacent to said rotatable element in junxtaposition to said cavity;

a generally annular thrust washer with a radial split and separation therethrough so as to be substantially C-shaped in plan view positioned in said cavity to be retained by said rim and being rotatable with said rotatable element;

said thrust washer also being in junxtaposition to and contacting said fixed member;

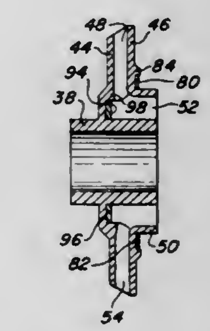

said thrust washer expanding radially upon rotation of said rotatable element due to centrifugal force exerted thereon and thus exerting a retaining force on said rim which retains said washer in said cavity and insures the rotation thereof at substantially the same speed as that of said rotatable elements.

4,063,847
GAS TURBINE ENGINE CASING
Roy Simmons, Olveston, England, assignor to Rolls-Royce (1971) Limited, United Kingdom
Filed Aug. 11, 1975, Ser. No. 603,606
Claims priority, application United Kingdom, Aug. 23, 1974, 37041/74
Int. Cl.² F04D *29/44*
U.S. Cl. 415—200 5 Claims

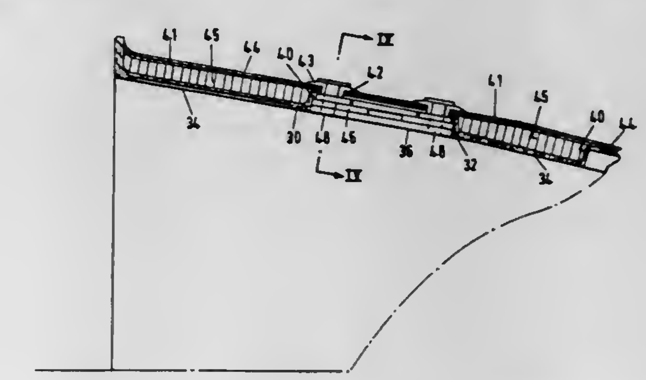

1. A gas turbine engine compressor comprising in combination a hollow drum of circular cross-section and a plurality of rows of radially inwardly extending stator vanes disposed in annular recesses formed in the drum and wherein the drum comprises:

an inner wall of fiber-reinforced composite material, said inner wall having axially successive portions of relatively smaller and larger diameters respectively thereby defining a plurality of alternately radially inwardly facing and radially outwardly facing annular recesses, the radially inwardly facing recesses defining means for receiving said stator vanes,

an intermediate layer of relatively lightweight filler material extending over the outer surface of said inner wall at least in the region of the radially outwardly facing recesses thereof, said intermediate layer at least partially filling the recesses and thereby eliminating sharp changes in diameter of said outer surface,

and a second wall comprising carbon fiber material continuously wound around said inner wall and said intermediate layer.

4,063,848
CENTRIFUGAL COMPRESSOR VANELESS SPACE CASING TREATMENT
Jesse O. Wiggins, and Gerry L. Waltz, both of Peoria, Ill., assignors to Caterpillar Tractor Co., Peoria, Ill.
Filed Mar. 24, 1976, Ser. No. 670,029
Int. Cl.² F04D *17/10, 29/44*
U.S. Cl. 415—206 **2 Claims**

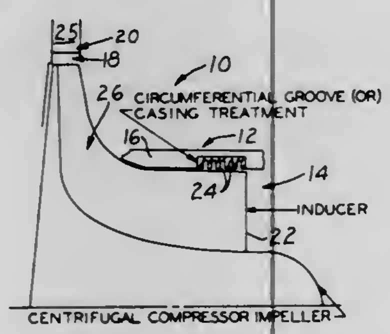

1. In a centrifugal compressor which includes an inducer section including an impeller having a plurality of impeller blades rotatingly driven by a shaft of said compressor to impel air centrifugally outwardly from said shaft with an air duct defined by a casing radially about said impeller blades and a diffuser section including a plurality of diffuser vanes in said air duct downstream of a vane-free space a distance downstream of said impeller, an improvement comprising:
- a circumferential groove extending into said casing in said vane-free space upstream of said diffuser vanes and downstream of said impeller blades, said groove being generally equally spaced circumferentially about said shaft, to bring about a reduction in surge flow and hence a reduction in a flow value at which stalling of the inducer section occurs without bringing about adverse effects of significant magnitude during normal high speed compressor operation.

4,063,849
NON-CLOGGING, CENTRIFUGAL, COAXIAL DISCHARGE PUMP
Doan D. Modianos, 229 W. Robert E. Lee Blvd., New Orleans, La. 70124
Filed Feb. 12, 1975, Ser. No. 549,208
Int. Cl.² F01D *29/44*
U.S. Cl. 415—210 **16 Claims**

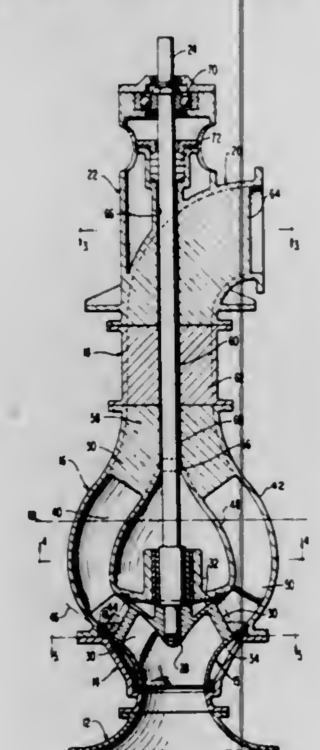

1. A non-clogging pump for moving mixed solid and fluid flows such as sewage and similar sludges comprising
- an elongated housing means disposed with its axis arranged generally vertically, said housing means having a flow passage therethrough for said fluid and having a suction bell inlet to said passage at its lower end and an outlet from said passage at its upper end,
- a rotatably driven pump impeller confined within the housing above the inlet end of said housing for raising and moving fluid in said passage from below the inlet to the outlet,
- the passage in the housing including an impeller portion and a diffusion zone between the pump impeller and the outlet,
- said impeller including a plurality of spiral shaped vanes, each of said vanes having a rounded nose and a streamlined configuration,
- means to drive said impeller to produce an upwardly moving tangential fluid flow in said passage,
- stationary vane means in said diffusion zone, said stationary vane means having a rounded nose and a streamlined configuration, and
- the nose end of said stationary vane means being positioned to face directly into the fluid flow from the impeller means,
- the body of said stationary vane means beyond its nose gradually straightening out in the direction of fluid flow through the diffusion zone and terminating in a vertically disposed portion at the outlet,
- the impeller portion of said housing above said inlet being of inverted generally conical shape and said impeller being confined substantially within said cone,
- said drive means for said impeller including a rotatably driven shaft extending vertically through the housing,
- said impeller being secured to the lower end of said drive shaft for rotation therewith,
- said impeller including inverted truncated generally conical shroud elements integral with said impeller vanes, and
- said shroud elements being spaced apart in generally parallel relationship to the inverted conical housing whereby to form a confined diverging fluid flow passage through the impeller for accelerating the movement of fluid over said vanes.

4,063,850
GAS TURBINE ENGINE HAVING A CERAMIC TURBINE WHEEL
Alfred Hueber, Munich, and Klaus Hagemeister, Ebenhausen, both of Germany, assignors to Motoren- und Turbinen-Union Munchen GmbH, Munich, Germany
Filed Nov. 22, 1976, Ser. No. 744,219
Claims priority, application Germany, Dec. 3, 1975, 2554353
Int. Cl.² F04D *29/02;* **F01D** *5/28*
U.S. Cl. 415—214 **7 Claims**

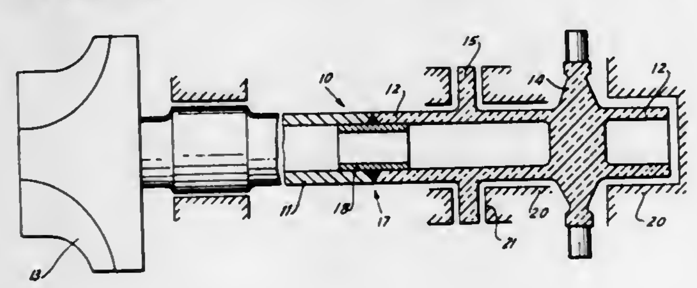

1. A gas turbine engine having a rotor including a rotor shaft and a turbine wheel, the turbine wheel being in a high temperature zone of the engine and the engine also having a cooler zone, the turbine wheel being made of a ceramic material, and the rotor shaft including a portion of ceramic material formed as one piece with the turbine wheel, said rotor shaft portion extending into the cooler zone of the engine.

4,063,851
COOLABLE TURBINE AIRFOIL
Howard Aubrey Weldon, Tolland, Conn., assignor to United Technologies Corporation, Hartford, Conn.
Filed Dec. 22, 1975, Ser. No. 643,567
Int. Cl.² F01D *5/18*
U.S. Cl. 416—97 A **10 Claims**

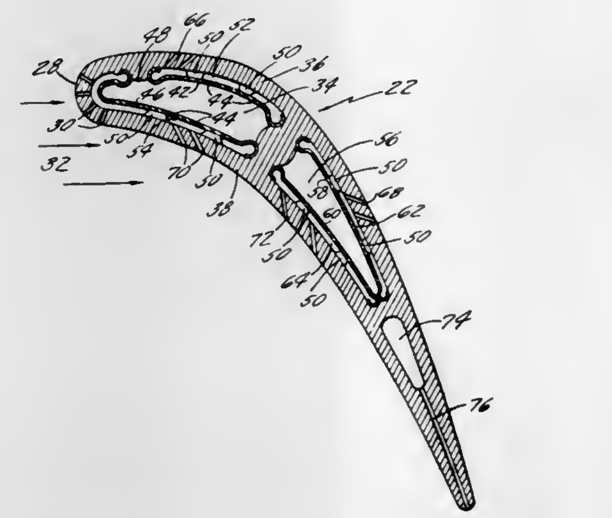

1. A coolable airfoil structure, comprising:
- an airfoil shaped member having incorporated therein a hollow cavity and having
  - a leading edge including a plurality of leading edge holes disposed therein,
  - a suction side wall including a plurality of suction side holes disposed therein,
  - a pressure side wall including a plurality of pressure side holes disposed therein, and
  - a span-wise extending rib which projects into the cavity from the suction side wall between the suction side holes and the pressure side holes;
- a plate-like pressure side baffle disposed within the cavity and spaced closely apart from the pressure side wall forming a pressure side chamber between the pressure side baffle and the pressure side wall wherein cooling air is flowable through said chamber from the cavity to the pressure side holes and to the leading edge holes; and
- a plate-like suction side baffle disposed within the cavity and spaced closely apart from the suction side wall forming a suction side chamber between the suction side baffle and the suction side wall wherein cooling air is flowable through said chamber from the cavity to the suction side holes, and wherein said pressure side baffle and said suction side baffle terminate at and are separated by said span-wise extending rib.

4,063,852
AXIAL FLOW IMPELLER WITH IMPROVED BLADE SHAPE
John F. O'Connor, Torrington, Conn., assignor to Torin Corporation, Torrington, Conn.
Filed Jan. 28, 1976, Ser. No. 653,399
Int. Cl.² F04D *29/38*
U.S. Cl. 416—228 **23 Claims**

1. An axial flow air impeller for low pressure ratio applications in the range 1.03 and below; said impeller comprising a hub adapted for rotation about an axis and carrying a plurality of similar circumaxially arranged air moving blades, each of said blades having a root portion attached to the hub and a radially outwardly disposed tip portion with smoothly curving side edges therebetween, the camber of each blade decreasing nonlinearly in value as the blade is viewed from its said root portion to its said tip portion, and the chord measurement of each blade being substantially less at its root portion than at its tip portion, substantially in excess of 50% of the blade camber

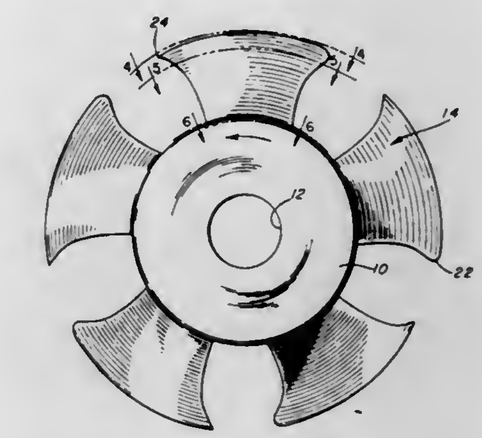

decrease and substantially all of the blade chord change occurring over the outermost 40% of the blade span.

4,063,853
NOISE DAMPENING MEANS IN REFRIGERATION MOTOR-COMPRESSOR UNITS AND METHOD
Carl J. De Groat, Peterboro, N.Y., assignor to Carrier Corporation, Syracuse, N.Y.
Filed May 10, 1976, Ser. No. 684,520
Int. Cl.² F04B *17/00, 35/00*
U.S. Cl. 417—53 **9 Claims**

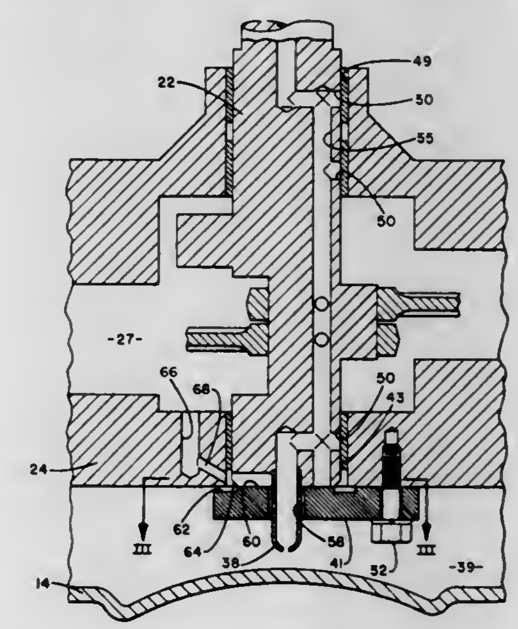

9. A method of reducing the noise transmitting capability of a body of oil having a motor compressor unit partially submerged therein comprising the steps of:

agitating a portion of the body of oil to cause refrigerant entrained therein to separate therefrom as a gas;

directing the agitated oil and separated gas radially outward through the body of oil to form bubbles in the oil which reduce the noise transmitting capability of the body of oil; and

directing compressed refrigerant gas toward said agitated oil and separated refrigerant gas to intermix therewith to increase the quantity of bubbles formed in the body of oil.

4,063,854
SPRAY PUMP ASSEMBLY
Thomas H. Hayes, Baton Rouge, La., and Steve W. Beres, Bridgeport, Conn., assignors to VCA Corporation, Baton Rouge, La.
Filed June 1, 1976, Ser. No. 691,219
Int. Cl.² F04B *21/04;* **G01F** *11/02*
U.S. Cl. 417—552 **1 Claim**

1. A finger-operated spray pump assembly comprising:
a. compression chamber means having vent hole means in

the wall thereof and dip tube means connectable at the lower end thereof;

b. closure means rigidly connectable to said compression chamber means;

c. piston means slidably fitted in said compression chamber means;

d. check valve means located in the lower end of said compression chamber means;

e. hollow stem means having an upper end and a lower end, said upper end of said stem means being slidably fitted inside said closure means and said lower end of said stem means being slidably fitted in said piston means, said stem means having actuator button means connectable to the upper end thereof, said stem means having shoulder means for contacting and forcing said piston means towards said check valve means;

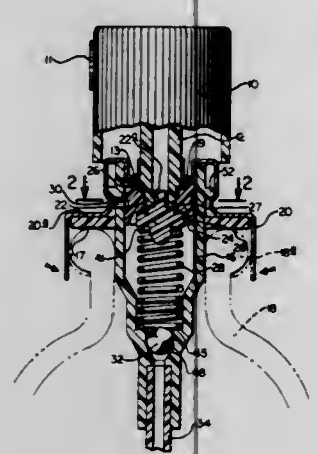

f. seal means slidably fitted in the lower end of said stem means, the lower end of said stem means being adapted to urge said seal means away from sealing contact with said piston means prior to said shoulder means contacting said piston means, said seal means having base means for making sealing contact with said piston means, said base means having post means connected thereto, said post means being adapted for slidable receipt within the lower end of said stem means, said post means having projection means thereon which define slot means therebetween, said slot means being adapted to slidably receive guide means located on the inside of the lower end of said stem means to prevent said seal means from turning relative to said stem means; and,

g. spring means fitted inside said compression chamber means to urge said seal means against said piston means.

4,063,855

COMPRESSOR CAPACITY AND LUBRICATION CONTROL SYSTEM

Kermit D. Paul, Bethlehem, Pa., assignor to Fuller Company, Catasauqua, Pa.

Filed May 3, 1976, Ser. No. 682,295

Int. Cl.² F01C *21/04;* F04C *29/02;* F04B *39/02;* F01M *1/00*

U.S. Cl. 418—84 6 Claims

1. In a gas compressor system including a screw type rotary gas compressor having an inlet for gas to be compressed, an inlet for lubricant and an outlet for compressed gas and lubricant, said gas compressor being operable in a loaded condition and in an unloaded condition, an improved system for supplying lubricant to said gas compressor comprising:

a first source of lubricant having pressurized and vented conditions flow connected to the outlet of the gas compressor;

a second source of lubricant adapted to be pressurized and flow connected to the first source of lubricant;

means for selectively supplying lubricant from said second source to the inlet for lubricant of the gas compressor;

means including a pump for continuously supplying lubricant from said first source to the inlet for lubricant of the gas compressor;

first valve means for venting said first source of lubricant to atmosphere when the gas compressor is being operated in an unloaded condition; and

said means for selectively supplying lubricant from said second source including conduit means flow connecting said source with the inlet for lubricant of the gas compressor and second valve means in said conduit means for preventing lubricant from being supplied to said inlet for lubricant of the gas compressor from said second source

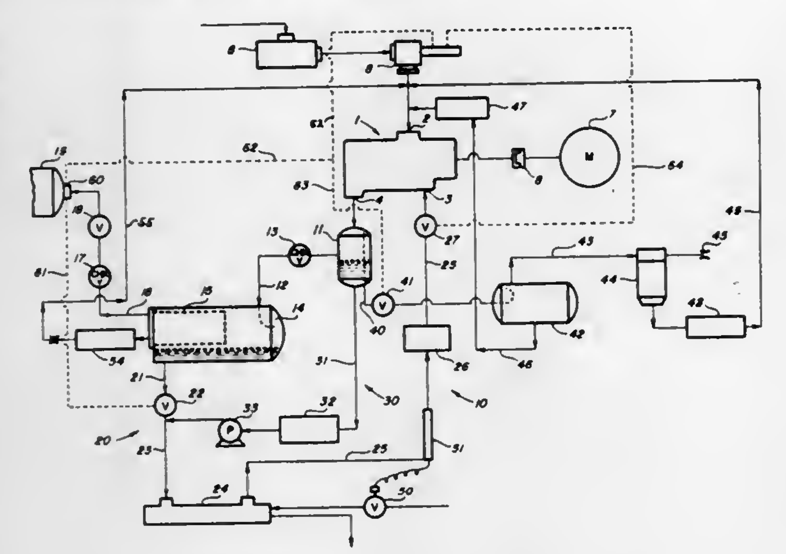

when the gas compressor is being operated in an unloaded condition and permitting lubricant to be supplied to the inlet for lubricant from said second source when the gas compressor is being operated in a loaded condition;

said means from continuously supplying lubricant from said first source to the inlet for lubricant is flow connected to said conduit means flow connecting the said second source with the inlet for lubricant downstream, in the direction of lubricant flow, from said second valve means.

4,063,856

PARTICULATE PRODUCT OF SELF SUPPORTING SPHERES CONTAINING INORGANIC MATERIAL AND APPARATUS FOR PRODUCING SAME

Chester J. Dziedzic, Dushore, Pa., assignor to GTE Sylvania Incorporated, Stamford, Conn.

Division of Ser. No. 551,700, Feb. 21, 1975, abandoned. This application July 6, 1976, Ser. No. 702,539

Int. Cl.² B29C *13/00*

U.S. Cl. 425—5 1 Claim

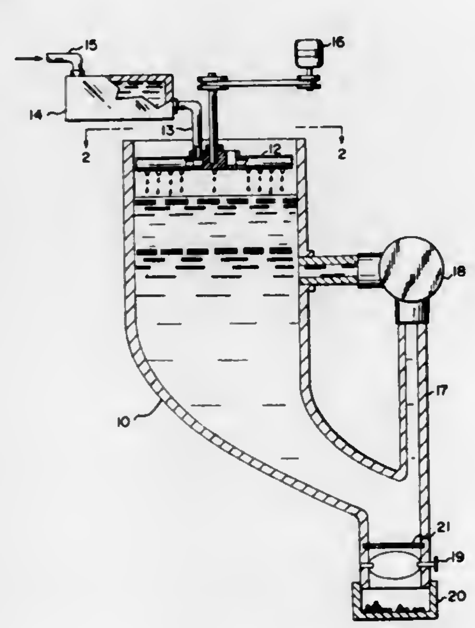

1. An apparatus for forming self-supporting spheres containing inorganic material, the apparatus comprising:

a. a first liquid container having a bottom portion, a central portion and an open top portion, the container for holding a first two-phase liquid;

b. valve means disposed at the bottom portion of said first liquid container for controllably removing liquid and self-supporting spheres from said first liquid container;

c. means for recirculating a lower liquid phase of the two-phase liquid in said first liquid container from the bottom portion of the container to the central portion thereof, wherein said recirculating means comprises a liquid pump and a liquid supply line extending from the bottom portion of the first liquid container into the intake side of said liquid pump and re-entering the first liquid container from the outlet side of the pump at a central portion below the interface with the upper first phase of the two-phase liquid;

d. means for introducing droplets of a second liquid into the upper portion of the said first liquid container, said means comprising: a liquid supply manifold comprising at least two cross intersecting tubes forming a horizontal plane and an array of tubes extending downwardly from the manifold and opening into the open top portion of the first liquid container; for supplying the second liquid to the manifold under pressure; and means for rotating the manifold in the plane about its point of intersection; and

e. a second container removably attached to the bottom portion of first container below the valve means for collecting the self-supporting spheres.

4,063,857

CONTROL UNIT FOR MOVING THE SLIDE MOLDS DURING THE PRODUCTION OF BUILDINGS

Jozsef Thoma, Budapest, Hungary, assignor to Bernard Ahl, Cologne, Germany

Filed Jan. 28, 1977, Ser. No. 763,622

Int. Cl.² B28B *7/04;* E04G *11/22*

U.S. Cl. 425—63 20 Claims

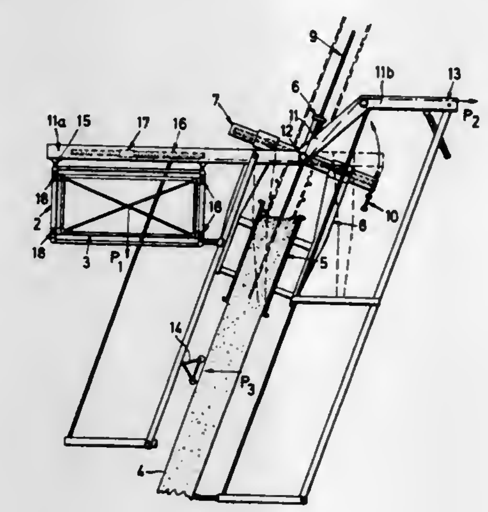

1. Apparatus for erecting structures from flowable and settable material comprising a lifting unit including an open ended shell into which flowable and settable material is adapted to be poured, carrier means for supporting said shell, means for elevating said carrier means whereby said shell is elevated to form a structure as the material poured thereinto eventually sets; arm means having opposite end portions, said arm means being disposed in transversely spanning relationship to the structure, means pivotally connecting said carrier means to said arm means between opposite end portions of the latter, a first pair of relatively telescopically movable inner and outer members connected to a first of said end portions outboard of the structure, said inner and outer members having axes in general tangential external relationship to the structure, first means for moving said inner and outer members telescopically relative to each other, and second means for moving said inner and outer members toward and away from the structure.

4,063,858

LAYER-FORMING APPARATUS, ESPECIALLY FOR THE PREPARATION OF PARTICLE-BOARD MATS

Heinrich Axer, Nettetal; Wolfgang Michels, Krefeld, and Werner Ufermann, Penzberg, all of Germany, assignors to G. Siempelkamp & Co., Krefeld, Germany

Filed Aug. 5, 1976, Ser. No. 711,882

Claims priority, application Germany, Aug. 8, 1975, 2535382

Int. Cl.² B29J *5/00*

U.S. Cl. 425—81 6 Claims

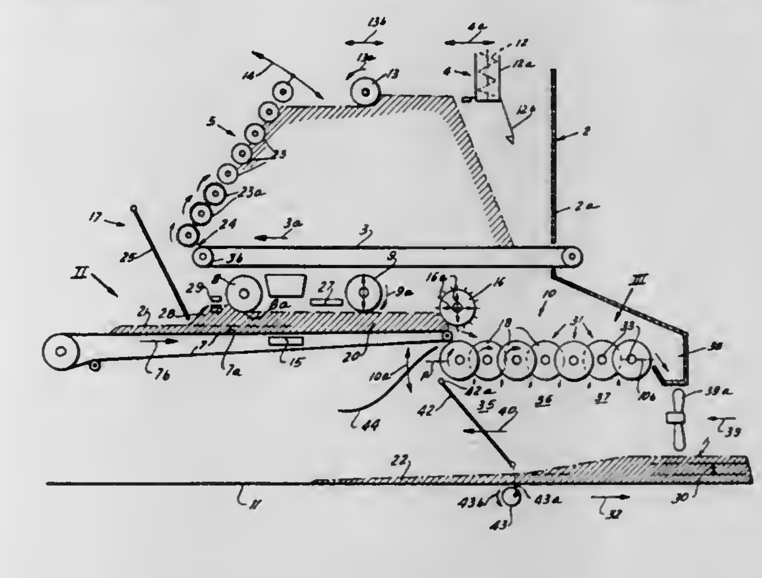

1. An apparatus for the preparation of mats of particulate material, especially the formation of particle board by pressing of the mat, comprising:

a hopper for receiving a supply of particulate material, said hopper including

a dispensing conveyor forming a floor adapted to receive a pile of said material and advancing said pile horizontally in a given direction,

a roller grate forming a wall of said hopper engageable with said pile upon the displacement thereof in said direction, said roller grate being inclined to the vertical and feeding particles from said pile in a cascade, and

means for feeding particulate material to said pile on said dispensing conveyor;

classifying means beneath said roller grate for segregating said cascade of particulate material into relatively fine particles and coarser particles;

metering means beneath said classifying means for advancing particles collected therefrom at a given rate, said metering means including

a metering conveyor disposed below said classifying means and receiving said fine particles in a first layer and said coarser particles in at least one second layer on said first layer, said metering conveyor having a discharge end,

a volume-metering roller disposed along said metering conveyor for regulating the volume rate of the flow of particles on said metering conveyor past said volume-metering roller,

means for detecting the weight of particles per unit area on said metering conveyor,

a weight-metering roller along said metering conveyor controlled by the last mentioned means for maintaining a predetermined weight of particles per unit area on said metering conveyor, and

a cast-off roller at said discharge end of said metering conveyor for casting particles therefrom;

a spreading head adjacent said discharge end of said metering conveyor for receiving the particles cast by said cast-off roller from said metering conveyor, said spreading comprising an array of interdigitating disk rollers all driven in the same sense and with progressively increasing interdigitating spacing away from said discharge end, the particles on said discharge end being advanced along the top of said array away from said discharge end;

a receiving surface displaceable beneath said spreading head for receiving the fine particles therefrom in a first layer and coarser particles therefrom in at least one further layer overlying said first layer, said surface being displaced in the direction of displacement of said particles on the top of said array; and
an air sifter between said head and said surface for additionally separating fine from coarse particles.

4,063,859

APPARATUS FOR PRODUCING SHAPED CONCRETE PRODUCTS

Gary L. Halle, Neenah, and Albert Van Lith, Kimberly, both of Wis., assignors to Gary L. Halle, Neenah, Wis.
Filed July 1, 1976, Ser. No. 701,866
Int. Cl.² B28B *3/02*
U.S. Cl. 425—139 34 Claims

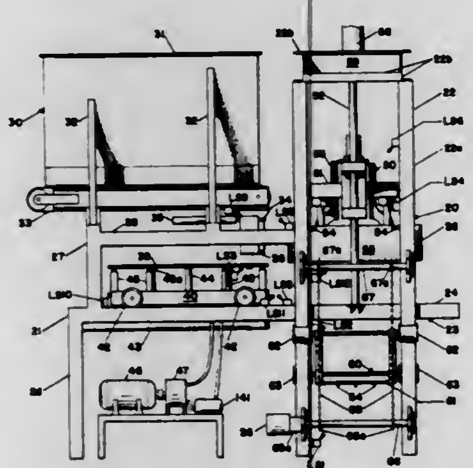

1. Apparatus for producing shaped concrete products, comprising:
a. a concrete mold having an inner form wall and an outer form wall spaced apart to define the vertical shape of a concrete product to be formed, said concrete mold being open at the top and bottom thereof and having withdrawable support means at the bottom of said mold for providing vertical support to a shaped product within said mold and for selectively withdrawing support from the shaped product to allow release thereof from the bottom of said mold;
b. vertically movable mold carrier means operatively associated with said mold for selectively engaging and grasping said mold, for carrying said mold in vertical movement therewith, and for selectively releasing said mold;
c. carriage means operatively associated with said mold for providing vertical support to the bottom of said mold and to the bottom of fluid concrete contained within said mold and for moving in selected horizontal movement;
d. feeding means operatively associated with said mold for discharging a selected amount of fluid concrete into said mold when said mold is supported by said carriage means in a feeding position wherein said mold is positioned to receive fluid concrete discharged by said feeding means, whereby the fluid concrete in said mold assumes the vertical shape of said inner and outer form walls of said mold;
e. shaped product support means positioned beneath said mold carrier means for receiving and supporting shaped concrete products discharged from the bottom of said mold, whereby when said mold is held by said mold carrier means and a shaped product within said mold is supported by said withdrawable support means, said carriage means may be moved horizontally to a position which allows said mold carrier means to descend with said mold to a position wherein the shaped product may be released from said mold by withdrawal of said withdrawable support means and may thereafter be supported by said shaped product support means.

4,063,860

APPARATUS FOR EMPLOYING A HIGH PERCENTAGE OF REGROUND THERMOPLASTIC SCRAP RESIN IN AN EXTRUDER

Darrell D. Cushing, Greenfield, Mass., assignor to Deerfield Plastics Co., Inc., South Deerfield, Mass.
Division of Ser. No. 460,731, April 15, 1974, Pat. No. 3,976,730, which is a continuation-in-part of Ser. No. 237,258, March 23, 1972, abandoned. This application May 6, 1975, Ser. No. 574,923
Int. Cl.² B29B *1/06*
U.S. Cl. 425—202 8 Claims

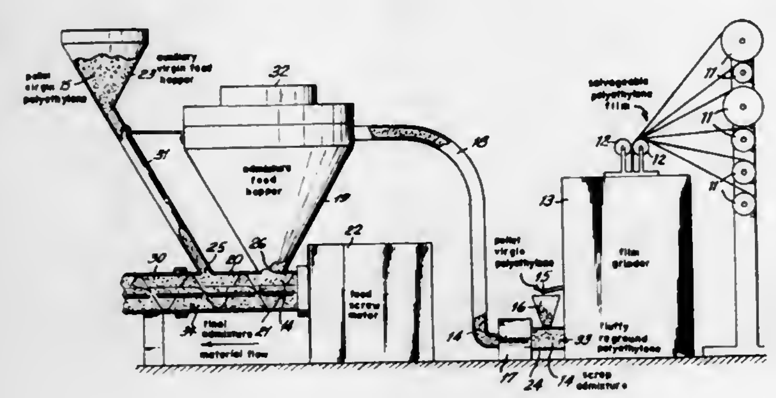

1. A thermoplastic resin extruder apparatus which permits the use of high amounts of fluffy scrap resin to be employed without resin starvation of the extruder die, which apparatus comprises:
a. a thermoplastic resin extruder which comprises
i. an extruder barrel,
ii. an extruder die at one end of the extruder for the extrusion of a resin product,
iii. a lead screw in the barrel for movement of thermoplastic resin material through the barrel to the extruder die,
iv. a first feed inlet in the barrel for the introduction of a fluffy low-density scrap resin into the barrel and compression of the fluffy resin in the barrel by the lead screw,
v. a second feed inlet in the barrel for the introduction of a granular high-density resin into the barrel, the second feed inlet downstream of the first feed inlet by at least one lead screw length, and generally adjacent and close to the first feed inlet along the barrel,
vi. the first feed inlet larger in inlet area than the second feed inlet, and
vii. a heated extruder section downstream of the second feed inlet to heat the thermoplastic resin prior to the extrusion of the heated resin in the extruder die;
b. a means upstream of said extruder barrel to grind a scrap thermoplastic resin onto a low-density fluffy scrap resin;
c. a first feed hopper operable to contain the fluffy scrap resin and having an open throat area at the lower portion thereof communicating directly with the first feed inlet, the hopper free of any screw conveyor for the fluffy resin therein, whereby fluffy resin in the first feed hopper is introduced by gravity or low pressure into the first feed inlet and compressed in part by the lead screw prior to the second feed inlet;
d. means operatively associated with said grinding means to convey the fluffy scrap resin from the grinding means to the first feed hopper; and
e. an auxiliary feed hopper operable to contain a granular high-density thermoplastic resin, and having an open throat area which communicates with the second feed inlet, whereby, on occasional plugging of the first feed inlet by the fluffy resin, granular resin is fed by gravity from the auxiliary hopper to the barrel through the second feed inlet, preventing resin starvation of the extruder die.

4,063,861

TIRE MOLD

Oskar Schmidt, Kittsee; Erich Grünner, Vienna; Horst Tompich; Gerhard Lenk, both of Kittsee, and Adam Drum, Bruck, Leitha, all of Austria, assignors to Polyair Maschinebau GmbH, Kittsee, Austria
Filed Mar. 23, 1976, Ser. No. 669,666
Claims priority, application Austria, Mar. 24, 1975, 2216
Int. Cl.² B29F *1/00;* B29H *5/02, 17/00;* B29C *5/04*
U.S. Cl. 425—542 6 Claims

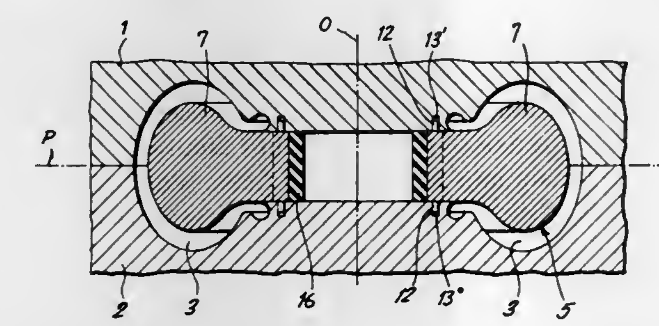

1. In a mold for a vehicular tire or the like, comprising a pair of separable half-shells forming an annular mold cavity centered on an axis and a generally toroidal core receivable between said half-shells to define an inner boundary for said cavity, said core being peripherally divided into an even number of alternating first and second segments, said first segments having sides converging in a radially inward direction as seen from said axis, said second segments having flanks in contact with said sides extending nonconvergingly in said radially inward direction to facilitate extraction of all segments from the molded article,
the improvement wherein said second segments and at least one of said half-shells are provided with mating coupling formations for immobilizing said second segments in a mold-closed position, at least said first segments being provided with biasing means exerting thereon a radially inward force in said mold-closed position for maintaining all said segments in firm contact with one another, said first segments being free from any coupling formations and being slidable with reference to said second segments and said half-shells in response to said inward force until coming to rest against the immobilized second segments in said mold-closed position.

4,063,862

FORMING APPARATUS FOR SYNTHETIC-MATERIAL TUBES

Arne Johansson, Olsremma, S-510 95 Dalstorp, Sweden
Filed June 17, 1976, Ser. No. 697,191
Claims priority, application Germany, June 23, 1975, 7519907[U]
Int. Cl.² B29C *17/00*
U.S. Cl. 425—392 13 Claims

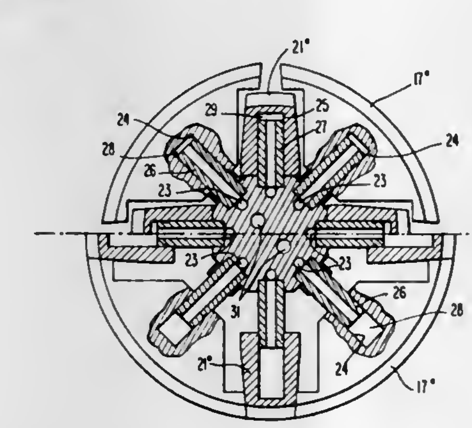

1. For shaping the inner surface of tubes of deformable material, forming apparatus disposed within the tube, with its middle axis on the longitudinal axis of said tube including means to soften the tube in the region where forming is to occur, and at least one shaping element forcing radially outward a portion of the tube to produce an inner profile, which element is provided with a number of mold segments disposed end-to-end about the periphery of said element in a common plane radial to said tube axis and which are radially extendable and retractable, said segments being divided into at least two groups, a mold segment belonging to the one group being disposed between segments belonging to at least one other group, the segments of the one group at their opposite ends having offset portions toward the central axis to provide a pocket which, when the shaping element is contracted, receives the mold segment of the other group, a guide plate for each group of segments, each said guide plate being displaceable axially of said tube to effect movement of actuating rods which effects radial displacement of the segments in the group.

4,063,863

CENTRIFUGAL CASTING MACHINE HAVING VACUUM ASSIST

Larry James Hilmoe, 9419 Caddy Lane, Caledonia, Wis. 53108
Filed Apr. 15, 1976, Ser. No. 677,268
Int. Cl.² B22D *13/06;* B29C *5/04*
U.S. Cl. 425—425 4 Claims

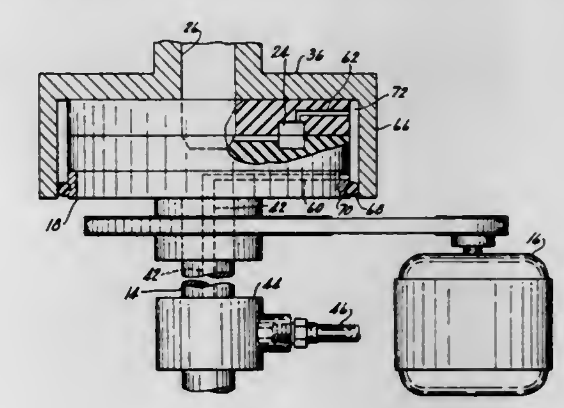

1. In centrifugal casting apparatus having a rotating shaft with a plate thereon for receiving a mold means for coaxial rotation with the shaft, said mold means and plate being generally coextensive in dimension and having peripheral surfaces spaced from the axis of the shaft, the mold means having a cavity positioned for rotation in a plane generally normal to the axis of said shaft, the improvement comprising:
a conduit means extending from the cavity to the peripheral surface of the mold means and opening thereon.
a passage in said shaft and plate having one end connected to a source of vacuum and the other end opening on the peripheral surface of the plate; and
a chamber about the plate and mold means extending along the entire peripheral surfaces thereof for forming a connection means between said conduit means and vacuum passage for applying the vacuum to said cavity.

4,063,864

APPARATUS FOR THE PRODUCTION OF HOLLOW CONFECTIONS PROVIDED WITH CENTER FILLINGS

Hugo Oberwelland, and Uwe Klahn, both of Halle, Germany, assignors to August Storck KG., Halle, Germany
Continuation of Ser. No. 552,064, Feb. 24, 1975, abandoned. This application Aug. 10, 1976, Ser. No. 713,286
Claims priority, application Germany, July 16, 1974, 2434024
Int. Cl.² A23G *3/12*
U.S. Cl. 425—433 13 Claims

1. Apparatus for the production of hollow confections provided with fillings, comprising, in combination: a rotary drive, metering feed means, a spinning station, a plurality of cup-shaped centrifugal molds, conveyor means which travel in a conveying direction under said metering feed means for casting a flowable confectionery mass into cup-shaped centrifugal molds which are mounted on said conveyor means for rotation about a vertical axis and each fitted with a first clutch member

having a surface defined by at least a portion of a cone and which at said spinning station is moved by said conveyor means over said rotary drive which includes at least one second clutch member mounted on a clutch holder and having a surface defined by at least a portion of a cone, said rotary drive further including a drive means and coupling means connecting said second clutch member to said drive means, means connected to said clutch holder for bringing said first and said second clutch members into and out of engagement for causing

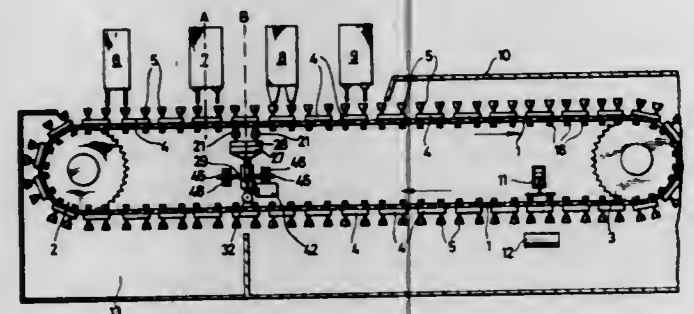

said molds to be rotated by said rotary drive, means displaceably mounting at least one of said first and second clutch members to be displaceable in the conveying direction in relation to said conveyor means or said clutch holder, respectively and in relation to the other of said first and second clutch members, said first and second clutch members because of their shapes and said displaceable nature relative to one another being adapted to pull themselves into axial alignment as they engage.

4,063,865

APPARATUS FOR EXTRUSION OF TUBULAR PARISONS

Rudolf Becker, Berlin, Germany, assignor to Bekum Maschinenfabriken GmbH, Berlin, Germany

Filed Aug. 11, 1976, Ser. No. 713,611

Claims priority, application Germany, Aug. 22, 1975, 2537419

Int. Cl.² B29D *23/04*

U.S. Cl. 425—467 **13 Claims**

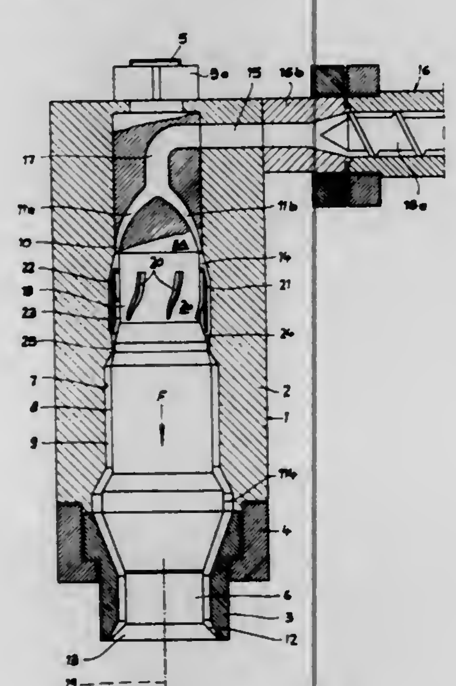

1. In an extruder head, particularly for use in machines for the production of tubular or blow molded synthetic plastic articles, the combination of a housing having an internal surface and an inlet for plasticized synthetic plastic material; a mandrel installed in and defining with said housing an elongated annular chamber one end of which receives plasticized material which is admitted into said inlet, said inlet extending substantially radially of said mandrel and said mandrel including a first portion having a channel in communication with said inlet, a neck portion and two heart-shaped cams defining two connecting passages communicating with said channel and providing two paths for the flow of plasticized material into said one end of said chamber, said paths being located substantially diametrically opposite each other and diverging circumferentially of said mandrel toward said one end of said chamber so that the material which flows from said channel toward said chamber forms a first tubular stream as it leaves said connecting passages; flow dividing means provided in said one end of said chamber, surrounding said neck portion and dividing said one end into substantially concentric inner and outer tubular compartments which receive the material of said first stream and respectively convey discrete second and third tubular streams of plasticized material toward the other end of said chamber, said flow dividing means being spaced apart from said internal surface; a plurality of baffles disposed in said inner compartment within said flow dividing means and inclined with respect to the axis of said mandrel to subdivide the respective discrete stream into a plurality of fields which merge into each other and with the other of said discrete streams downstream of said flow dividing means; and a die provided in said housing and defining with a second portion of said mandrel an annular extrusion orifice in communication with said other end of said chamber.

4,063,866

CONCRETE BLOCK FORMING AND FACING MACHINE

Manfred A. Lurbiecki, 2708 Panorama Drive, North Vancouver, B.C., Canada (V7G 1V6)

Filed May 3, 1976, Ser. No. 682,592

Int. Cl.² B28B *23/00*

U.S. Cl. 425—517 **6 Claims**

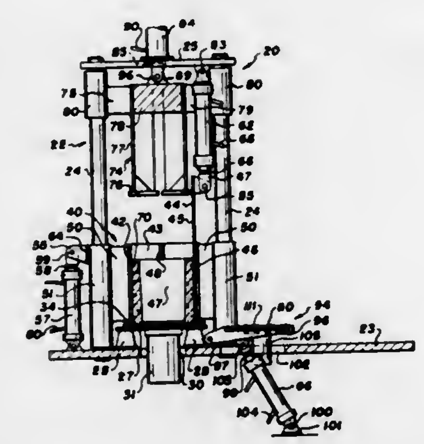

1. A machine for forming and facing a concrete block having a vertical face comprising a mold for casting said block in an upright position, a pallet beneath the mold, said mold having a movable wall adapted to initially cover the vertical face of the block, means operatively associated with said movable wall for removing the movable wall from the then uncured block which is adapted to be supported by the remainder of the mold and pallet, an applicator panel mounted alongside the mold adapted to support a horizontal layer of facing material, and means operatively associated with said applicator panel for moving the applicator panel to apply the facing material to the vertical face of the block.

4,063,867

INJECTION AND BLOWING MACHINE FOR MANUFACTURING HOLLOW BODIES OF PLASTICS MATERIAL

Alain Jannière, Le Havre, France, assignor to Pont-A-Mousson S.A., Nancy, France

Filed Dec. 29, 1976, Ser. No. 755,311

Claims priority, application France, Dec. 31, 1975, 75.40260; Dec. 8, 1976, 76.36972

Int. Cl.² B29D *23/03*

U.S. Cl. 425—526 **26 Claims**

1. A machine for continuously manufacturing hollow bodies by injection and blowing of material, comprising in combination, a rotary polygonal-sided turret rotating in a step-by-step

manner about an axis, a plurality of turret stations arranged around said axis of the turret and comprising an injection station injecting said material in the form of blanks, a blowing station having means axially stretching and then blowing said material into biaxially oriented hollow bodies, and intermediate stations between said injection station and said blowing station, said intermediate stations including a transfer station, an oven structure having means operable to heat the material to biaxial orientation temperature and being disposed adjacent said transfer station and having a plurality of oven stations moving in step-by-step manner in a closed circuit, a plurality of sets of support members carrying said material in various stages of manufacture of said hollow bodies, each of the sides

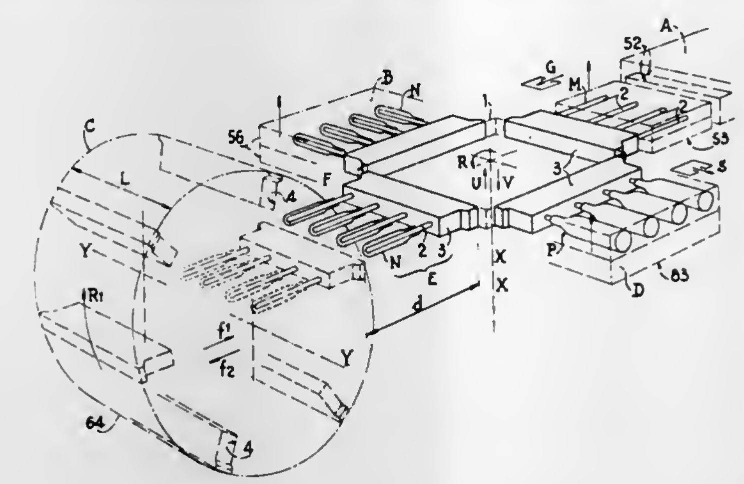

of the turret receiving a respective one of said sets of support members, each of said oven stations receiving a respective one of said sets of support members, means removably and independently fixing said sets of support members respectively to said turret sides and to said oven stations, the step-by-step rotation of the turret moving each set of support members carried by the turret sides to each one of said turret stations, the step-by-step movement of said oven stations moving each set of support members carried by the oven structure step-by-step in starting at said transfer station and eventually ending at said transfer station, and means transferring the sets of support members at said transfer station from said turret to said oven structure and subsequently from said oven structure to said turret.

4,063,868

MOLD DEVICE FOR THE PRODUCTION OF HOLLOW BODIES FROM THERMOPLASTIC MATERIALS

Tadeusz Piotrowski, Montreuil, France, assignor to Worson S.A., Geneva, Switzerland

Continuation of Ser. No. 468,994, May 10, 1975, abandoned, and a continuation of Ser. No. 220,334, Jan. 24, 1972, abandoned.

This application Aug. 3, 1976, Ser. No. 711,144

Claims priority, application Switzerland, Jan. 29, 1971, 001377/71

Int. Cl.² B29D *23/03*

U.S. Cl. 425—533 **1 Claim**

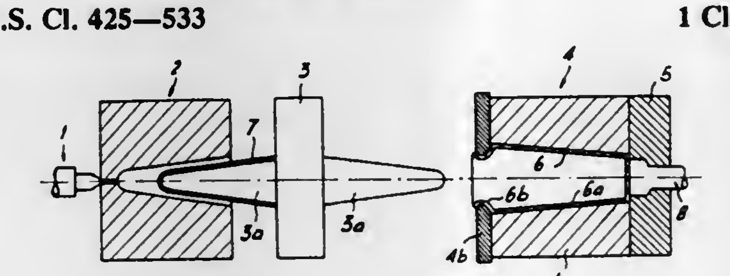

1. Injection blow molding equipment for producing, from thermoplastic material, hollow containers having a closed bottom and a reduced open neck with intervening side walls, comprising an injection mold having an open ended cavity for shaping a parison, a blow mold having an open ended cavity for shaping the container being produced, the injection and blow molds being spaced from each other and positioned with the open ends of their cavities presented toward each other along a common axis line, a mold core mounted between the molds and having a pivotal axis extended transverse to said axis line and providing for pivotal movement of the core between positions presented alternatively toward the open ends of the injection and blow molding cavities, means providing for relative displacement movement of the core and the molds toward and away from each other along said axis line, said pivotal and displacement movement of the core providing for insertion of the core into the injection mold for the molding of a parison on the core and for insertion of the molded parison and core into the blow mold, the blow mold comprising a joint-free tubular side wall portion defining the side wall of said blow mold cavity and a separable bottom wall at the end of the tubular side wall portion opposite to the open end of the cavity, means for relatively separating the bottom wall and side wall portion of the blow mold in a direction along said axis line sufficiently to provide for ejection of the blown container from the side wall portion through an opening in the side wall portion adjacent the bottom wall in the direction of said axis line, and a neck ring positioned and shaped to define the reduced neck of the hollow article being produced, the neck ring being formed of at least three segments each radially movable with respect to the mold cavity to provide for disengagement from the reduced neck of the hollow article being produced, the neck ring being mounted adjacent the open end of the mold and remaining with the mold after relative separation of the core and mold.

4,063,869

PRESSURE MOULDING MACHINES AND MOULD PARTS THEREFOR

Norbert R. Kelz, 45 Knoll St., Port Colborne, Ontario, Canada

Division of Ser. No. 390,270, Aug. 21, 1973, Pat. No. 3,942,928.

This application Dec. 3, 1975, Ser. No. 637,331

Int. Cl.² B29F *1/02*

U.S. Cl. 425—574 **2 Claims**

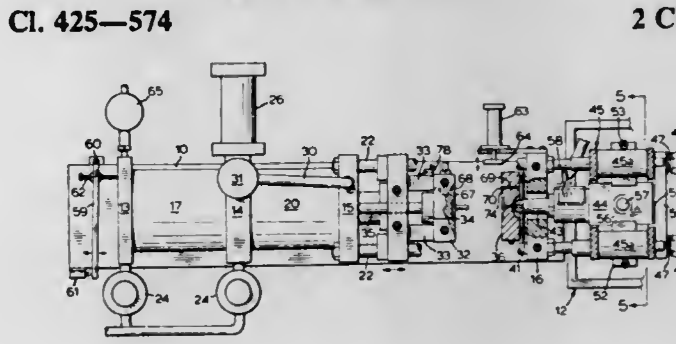

1. A pressure moulding machine employing one mould part and another cooperating mould part together forming a cavity-containing mould, the said one mould part being movable relative to the said other mould part in opposite direction to open and close the mould, the machine comprising a machine frame, means for mounting the said one mould part by the machine frame for the said opening and closing movement thereof, means for mounting the other mould part on the machine frame, motor means mounted by the machine frame operatively connected to the one mould part mounting means to move the mounting means in said opening and closing directions, a pump frame mounted by the machine frame and movable relative thereto, a material pump mounted by the pump frame with a nozzle engagable with the other mould part to pump material into the mould cavity, and spring means on the machine frame engaging the pump and spring-urging the pump, the pump frame and the pump nozzle for spring engagement of the pump nozzle with the other mould part in the opening direction of the mould parts, the said spring means comprising a transverse member mounted by the machine frame and providing a central pivot which pivot engages the pump and permits the transverse member to pivot thereabout, and two spring members spaced equidistantly from the pivot on opposite sides thereof and operative between the machine frame and the transverse member.

4,063,870
COMBUSTION OF HOT GASES OF LOW CALORIFIC POWER
Jean Deruelle, St. Avold, France, assignor to Stein Industrie, Velizy-Villacoublay, France
Filed Nov. 4, 1975, Ser. No. 628,768
Claims priority, application France, Nov. 6, 1974, 74.36828
Int. Cl.² F23G *7/06;* **F23L** *9/02*
U.S. Cl. 431—75 **4 Claims**

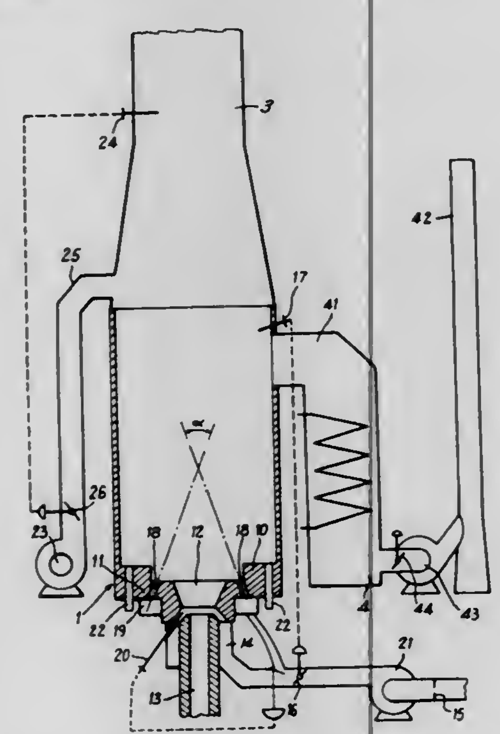

1. A combustion chamber for the complete combustion of hot gases of low calorific value, comprising:
a. a chamber having a vertical wall, a base and top, said vertical wall disposed between said base and top,
b. a chimney connected to the top of the wall for the discharge of combustion productions from the chamber,
c. a base plate associated with the base of said chamber,
d. at least one burner upwardly directed associated with the base plate and having a nozzle arranged to supply gas at a pressure close to atmospheric pressure and means for force supplying said primary air,
e. said base plate including for each of said at least one burner, peripheral oblique convergent nozzles directed to a point situated above the burner and comprising means for force supplying said secondary air,
f. distribution means for distribution of combustion air flow in two parts, one part directed to the burner and the other part to the peripheral nozzles,
g. first regulating means operable to control the flow of air for combustion depending on the temperature in the vicinity of the top of the chamber, and
second regulating means operable to control the distribution of the flow of primary air and the flow of secondary air depending on the flame temperature.

4,063,871
BOILER BURNERS
Michel Durin, Paris, France, assignor to Societe Anonyme Automobiles Citroen, Paris, France
Filed July 20, 1976, Ser. No. 707,002
Claims priority, application France, July 22, 1975, 75.22820
Int. Cl.² F23N *5/00*
U.S. Cl. 431—89 **4 Claims**

1. An installation for burning emulsions of the water-fuel type, said installation comprising:
a reserve tank;
means for supplying water to said reserve tank;
at least one burner;
a conduit extending between said reserve tank and said burner;
at least one pump means in said conduit for pumping water from said reserve tank to said burner;
means for supplying fuel to said water in said conduit at a position between said pump means and said burner;
emulsifier means, positioned between said fuel supplying means and said burner, for forming an emulsion of said fuel and water;
temperature measuring means, positioned between said

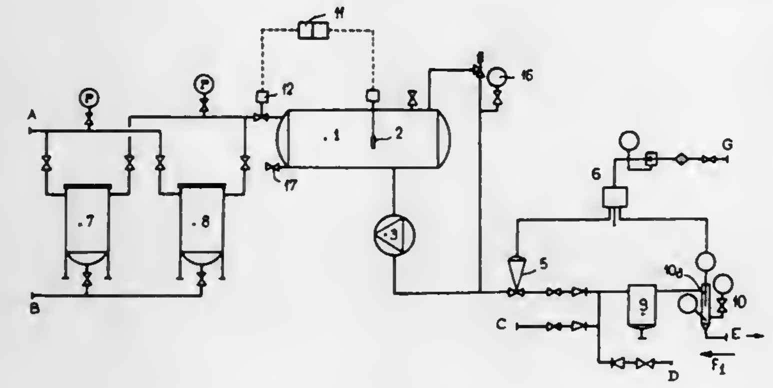

emulsifier means and said burner, for measuring the temperature of said emulsion after discharge thereof from said emulsifier means; and
regulating valve means, positioned between said pump means and said fuel supplying means and controlled by said temperature measuring means, for controlling the amount of water passed to said emulsifier means as a function of the temperature of said emulsion after discharge thereof from said emulsifier means.

4,063,872
UNIVERSAL BURNER
Sotiris Lambiris, Andover, Mass., assignor to General Electric Company, Schenectady, N.Y.
Filed Apr. 16, 1976, Ser. No. 677,723
Int. Cl.² A23C *9/00*
U.S. Cl. 431—285 **13 Claims**

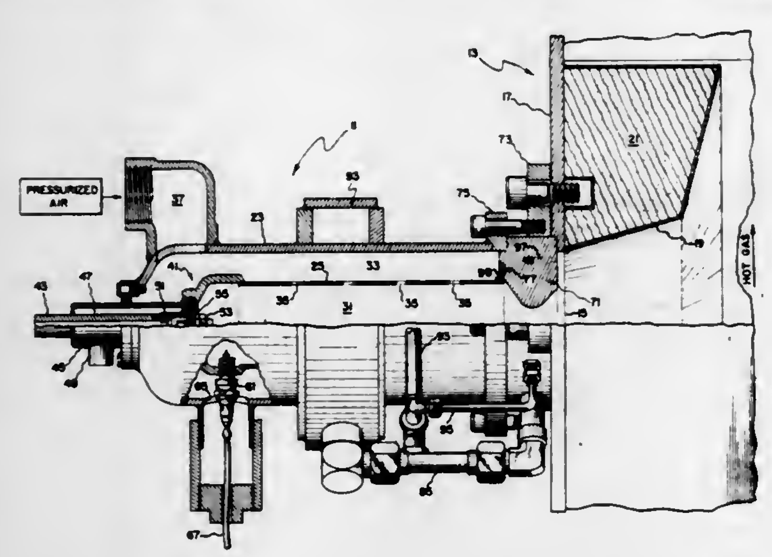

1. An apparatus for raising the temperature of an exhaust gas stream flowing through a duct, the apparatus being mounted substantially transverse to the exhaust gas flow and outside the duct; and, the apparatus communicating with the exhaust gas stream through a porthole in the duct, the apparatus comprising:
a substantially cylindrical outer casing having a downstream end adjacent the duct;
a substantially cylindrical perforate inner liner disposed within the outer casing; the inner liner and the outer casing having an annular chamber therebetween;
means providing pressurized air into the inner liner;
means providing a relatively small amount of fuel into the inner liner for mixing with the air to form a combustible mixture;
means for igniting the fuel and air mixture in said inner liner;

means at the downstream end of the inner liner for accelerating the flow rate of the fuel and air mixture; and;
fuel ports on the downstream side of the accelerator means for providing a relatively large amount of fuel into the ignited mixture whereby the combustion process is continued in the exhaust gas duct.

4,063,873
INFRARED GAS BURNER PLATE
Susumu Naito, Nagoya, Japan, assignor to Rinnai Kabushiki Kaisha, Nagoya, Japan
Filed Oct. 19, 1976, Ser. No. 733,947
Claims priority, application Japan, Oct. 20, 1975, 50-125372
Int. Cl.² F23D *13/12*
U.S. Cl. 431—328 **6 Claims**

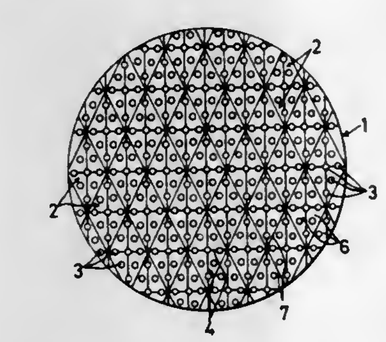

1. A gas infrared burner plate comprising a plate member of ceramic provided with a large number of burner holes therein distributed over the entire surface thereof, said burner plate having a front surface with daimond-shaped concave portions continuously formed in said front surface, each concave portion having one said burner hole in a center portion, a plurality of said burner holes in an annular arrangement surrounding the center portion and a plurality of said holes outside said annular portion.

4,063,874
VAPOR BURNING APPARATUS
Marvin L. Stary; Edward L. Brown, both of Claremont, and Eric L. Pridonoff, Pasadena, all of Calif., assignors to Clean Air Engineering, Inc., Anaheim, Calif.
Continuation-in-part of Ser. No. 612,781, Sept. 12, 1975. This application Feb. 6, 1976, Ser. No. 655,967
Int. Cl.² F23D *13/24, 13/20, 15/00*
U.S. Cl. 431—350 **12 Claims**

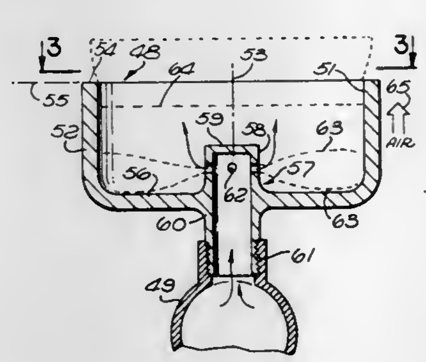

1. Vapor burning apparatus comprising:
a structure forming a recess which opens upwardly and which has an upwardly projecting peripheral side wall extending about the recess;
inlet means for introducing into said recess at a lower level therein a mixture of flammable vapor and air which have been premixed before reaching said inlet means;
said recess being closed against admission of additional air thereinto at the bottom of the recess and upwardly along said side wall to an upper level which is spaced above said level of introduction of the mixture into the recess, at which upper level external air can communicate with the recess; and means for producing said vapor-air mixture and delivering it to said inlet means, and acting to vary the vapor-air ratio thereof between a relatively lean mixture which can support combustion without additional air and burns at least partially within said recess before rising to said upper level and while isolated from external air by said structure, and a relatively rich vapor air mixture which cannot burn without additional air and which rises upwardly within said recess to said upper level while unburned, and then mixes with external air and burns entirely at or above said upper level.

4,063,875
CEMENT MAKING APPARATUS INCLUDING PREHEATER, KILN, COOLER AND AUXILIARY FURNACE
Masaaki Takeuchi, Musashino, Japan, assignor to Allis-Chalmers Corporation, Milwaukee, Wis.
Filed May 28, 1976, Ser. No. 690,991
Int. Cl.² F27B *7/02, 15/12*
U.S. Cl. 432—106 **3 Claims**

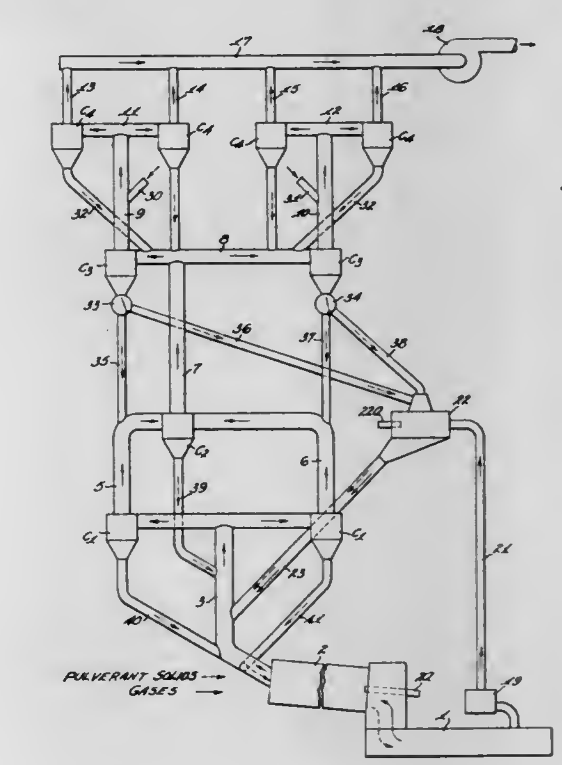

1. An apparatus for such as burning pulverant raw material to produce Portland cement in which pulverant feed material and gases follow generally countercurrent paths through a preheater (C_1, C_2 and C_3), an auxiliary furnace **(22)**, a rotary kiln **(2)**, a cooler **(1)** and a blower **(18)** connected to the preheaters to draw air and combustion gases through the apparatus; with the preheater having at least a first level stage (C_1) at an elevation vertically spaced above the kiln **(2)**, a second level stage (C_2) spaced vertically above the first level stage (C_1) and a third level stage (C_3) spaced vertically above the second level stage (C_2); and with both the kiln **(2)** and the auxiliary furnace **(22)** being separately connected to the cooler **(1)** to receive fuel combustion supporting air therefrom; the improvement comprising:
a. a pulverant material transfer pipe **(36** and/or **38)** connected on a first end thereof to a pulverant material discharge opening **(33)** of the third level preheater stage (C_3) and on a second end thereof to an inlet of the auxiliary furnace **(22)** for delivering at least a portion of the pulverant material from the third level stage (C_3) to the auxiliary furnace **(22)**;
b. a pulverant material transfer duct **(23)** connected on a first end to a material outlet of the auxiliary furnace **(22)** providing the sole outlet therefrom and on a second end thereof to a flue passage **(3, 4)** delivering kiln waste gas to the first level preheater stage (C_1); and
c. the auxiliary furnace **(22)** being located at a vertical level between the levels of the first and third level preheater stages (C_1 and C_3) to provide both the pipe **(36** and/or **38)** and the duct **(23)**, a downward slope of an angle causing

gravity flow of pulverant material through both the pipe and duct.

4,063,876

HEATER ATTACHMENT FOR L.P. GAS CONTAINER

Clifford E. Schweiss, Rte. 1, Box 81, Bloomsdale, Mo. 63627

Filed Mar. 29, 1976, Ser. No. 671,594

Int. Cl.^{2} F24H *1/00;* **F23D** *13/04*

U.S. Cl. 432—222 **7 Claims**

1. A heater attachment for an L.P. gas container having a gas outlet, the attachment comprising:
   a. adaptor means attachable to the gas outlet, and including a restricted outlet orifice means,
   b. burner means carried by the adaptor means and including a mixing chamber communicating with the outlet orifice and receiving gas therefrom,
   c. a flame chamber disposed superjacently of the burner mixing chamber and receiving flame therefrom and including an open outer end, and
   d. flame shield means disposed above the flame chamber in the path of the flame, said flame shield being outwardly

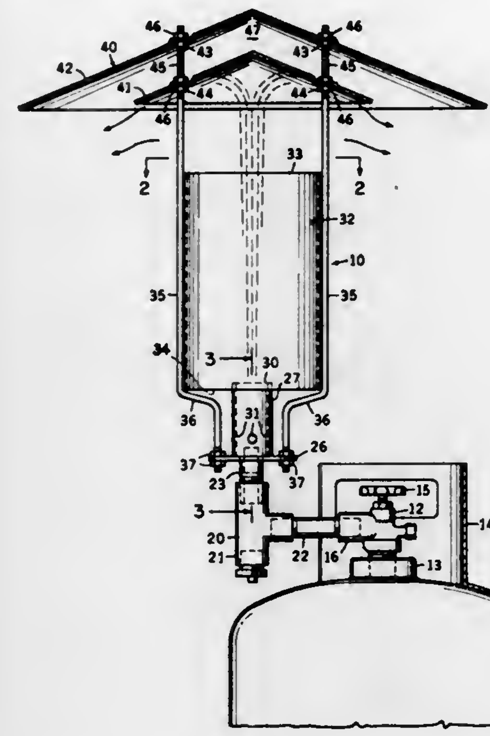

spaced from said open outer end in overlapping relation thereto.

CHEMICAL

4,063,877

DYEING METHODS

Alexander Elliot; John Gerald Lee, both of Huddersfield, and Brian Lever, Meltham, all of England, assignors to L. B. Holliday & Co. Limited, Huddersfield, England

Filed Nov. 26, 1975, Ser. No. 636,711

Claims priority, application United Kingdom, Dec. 2, 1974, 52094/74

Int. Cl.^{2} D06P *1/38, 3/14*

U.S. Cl. 8—1 A **8 Claims**

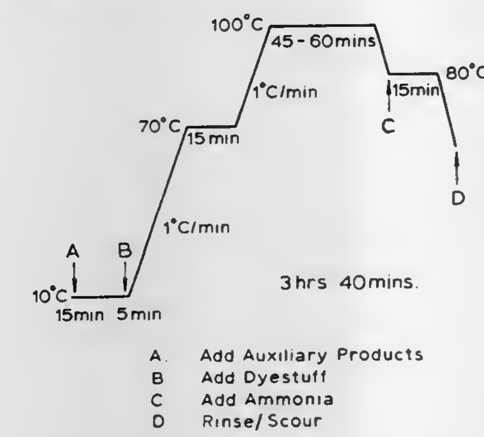

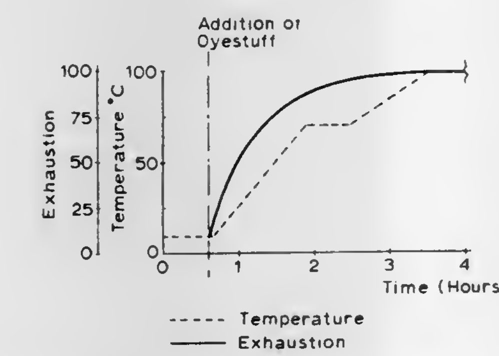

1. A method of dyeing machine washable wool fibers, the fibers having been chlorinated and resin-treated to provide machine washability, the method comprising:
   i. pre-treating the fibers in an aqueous bath containing a levelling agent for the dye, the pre-treatment being carried out at the dyeing temperature for a period of time in the range of from about 10 to 30 minutes, the dyeing temperature being in the range of from 70° C to the boiling point;
   ii. adding to the bath a solution of a dyestuff material comprising at least one reactive dye, to form a dye bath; and
   iii. dyeing the pre-treated fibers in the dye bath at the dyeing temperature.

4,063,878

APPLYING SUBLIMATION INDICIA TO PRESSURE-SENSITIVE ADHESIVE TAPE

Bruce W. Weeks, Lake Elmo, Minn., assignor to Minnesota Mining and Manufacturing Company, St. Paul, Minn.

Filed Nov. 12, 1975, Ser. No. 631,183

Int. Cl.^{2} D06P *3/00*

U.S. Cl. 8—2.5 A **3 Claims**

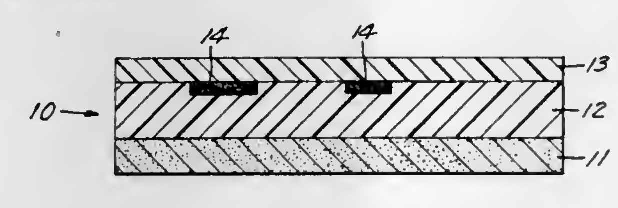

1. A method for imprinting permanent, smudge-proof indicia on backsized pressure-sensitive tape comprising a flexible backing having a pressure-sensitive adhesive on one surface thereof and a dye-permeable backsize coating on the other surface thereof, said process comprising the steps of:
   a. placing a dye source web, comprising a dimensionally stable substrate containing a heat-sublimable dye on said backsize coating of said pressure-sensitive tape; and
   b. placing a heat conductive relief-imaged platen on the surface of said dye source web such that the relief image contacts said dye source web; and
   c. pressing the pressure-sensitive adhesive tape, the dye source web and the relief-imaged platen together such that intimate contact is maintained therebetween; and
   d. heating the heat-conductive platen to the dye sublimation temperature; and
   e. dyeing the flexible backing of said pressure-sensitive tape to thereby provide a visible image therewithin by maintaining said contact at said temperature for a time sufficient to cause dye to permeate through said backsize coating and into said flexible backing.

4,063,879

TRANSFER PRINTING OF CELLULOSIC FABRICS AND TRANSFER FOR USE THEREIN

Gerhard Faulhaber, Bad Duerkheim; Hugo Fuetterer, Ludwigshafen; Harro Petersen, Frankenthal, and Hermann Schwab, Ludwigshafen, all of Germany, assignors to BASF Aktiengesellschaft, Ludwigshafen, Germany

Filed Jan. 16, 1976, Ser. No. 649,634

Claims priority, application Germany, Jan. 23, 1975, 2502590

Int. Cl.^{2} D06P *5/20, 5/22*

U.S. Cl. 8—2.5 A **8 Claims**

1. A process for the transfer printing and durable fixing of a sublimable dye or optical brightener from a transfer paper onto a cellulosic fabric, said process comprising:

impregnating the fabric to be printed with an aqueous solution of a cross-linking agent consisting essentially of at least one polyfunctional etherified compound selected from the group consisting of ureas, melamines and carbamates which bear at least two methyl, ethyl, propyl or butyl ether groups, said etherified compound being both a solvent for said dye or optical brightener and also being crosslinkable with cellulose;

drying the impregnated fabric; and

then printing said fabric by sublimation at an elevated temperature from a paper transfer containing said dye or optical brightener in the presence of a cross-linking catalyst selected from the group consisting of volatile acids and the metal and ammonium salts of said volatile acids, said catalyst also being applied to the fabric from a paper transfer.

4,063,880

CONCENTRATED DISAZO DYE-SURFACTANT SOLUTION

Victor Tullio, Wilmington, Del., assignor to E. I. Du Pont de Nemours and Company, Wilmington, Del.

Continuation-in-part of Ser. No. 462,395, April 19, 1974, Pat. No. 3,957,425. This application Nov. 6, 1975, Ser. No. 629,549

The portion of the term of this patent subsequent to May 18, 1993, has been disclaimed.

Int. Cl.^{2} C09B *27/00, 31/02;* **D06P** *1/02*

U.S. Cl. 8—41 R **11 Claims**

1. An improved aqueous-organic solvent solution having a pH between 10 and 13, of the disazo dye

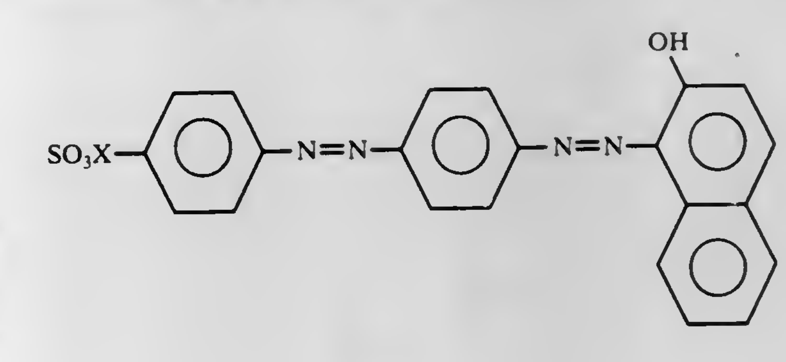

wherein X is a cation selected from the group sodium, potassium, lithium, and ammonium, the improvement comprising the presence in the dye solution of a combination of

i. 0.1% to 10.0%, by total weight, of an anionic surfactant, and

ii. 0.1% to 10.0%, by total weight, of a nonionic surfactant, the ratio of anionic surfactant to nonionic surfactant being between 1 to 20 and 17 to 1, the dye solutin having a dye concentration in the range of 15% to 25% based on the total weight of the solution, said solution being nongelling upon dilution with water,

the anionic surfactant being a water-soluble salt of at least one member of the group consisting of substituted benzenesulfonic acid salt, substituted naphthalenesulfonic acid salt, and sulfonated naphthaleneformaldehyde condensate salt,

the nonionic surfactant being selected from at least one member of the group consisting of condensates of

a. C_4 to C_{24} alkyl primary amines and at least 5 moles of propylene oxide,

b. C_4 to C_{24} alkyl primary amines and at least 5 moles of ethylene oxide,

c. C_{12} to C_{24} alcohols and at least 15 moles of ethylene oxide,

d. C_{12} to C_{24} alcohols and at least 5 moles of propylene oxide,

e. C_4 to C_{24} alcohols and at least 8 moles of ethylene oxide and 2 moles of propylene oxide,

f. alkyl phenols and at least 8 moles of ethylene oxide, and

g. ethylene oxide and polypropylene ether glycol which is derived from propylene glycol and propylene oxide said glycol having a molecular weight from about 1,000 to 10,000, said condensate having a proportion derived from ethylene oxide of 20 to 80 weight percent.

4,063,881

SYNTHETIC POLYAMIDE FIBRES COLORED WITH ACID AZOBENZENE DYESTUFFS, CONTAINING A N-ALKYL (OR SUBSTITUTED ALKYL)-N-SULPHOPHENOXYALKYLAMINO RADICAL IN THE PARA POSITION TO THE AZO LINKAGE

Djavad Razavi, Paris, France, assignor to Produits Chimiques Ugine Kuhlmann, Clichy, France

Division of Ser. No. 280,310, Aug. 14, 1972, abandoned, which is a division of Ser. No. 18,340, March 10, 1970, abandoned. This application Nov. 20, 1974, Ser. No. 525,608

Claims priority, application France, Mar. 14, 1969, 69.07258

Int. Cl.² C09B *29/08, 31/04;* **D06P** *1/04, 3/24*

U.S. Cl. 8—41 B **4 Claims**

1. Synthetic polyamide fibre colored with a water-soluble dyestuff of the formula:

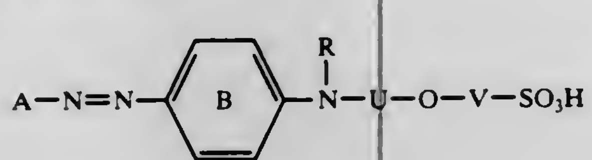

wherein A is phenyl substituted by 1 to 3 substituents selected from the group consisting of chlorine, bromine, methyl, methoxy, nitro, phenylazo, tolylazo, and 2,6-dichloro-4-nitrophenylazo, B is unsubstituted or substituted by methyl, R is alkyl containing 1 to 4 carbon atoms, U is alkylene containing 2 to 5 carbon atoms, V is unsubstituted phenylene or phenylene substituted by one chlorine, bromine or alkyl containing 1 to 4 carbon atoms.

4,063,882

STORAGE-STABLE QUATERNARY STYRYL DYE SOLUTIONS

Werner Douglas Steiner, Wilmington, Del., assignor to E. I. Du Pont de Nemours and Company, Wilmington, Del.

Filed Apr. 15, 1976, Ser. No. 677,445

Int. Cl.² C09B *67/00;* **D06P** *1/62;* **C07C** *121/50*

U.S. Cl. 8—92 **7 Claims**

1. A storage-stable quaternary styryl dye solution comprising, by weight,

i. 20% to 40% of the dye

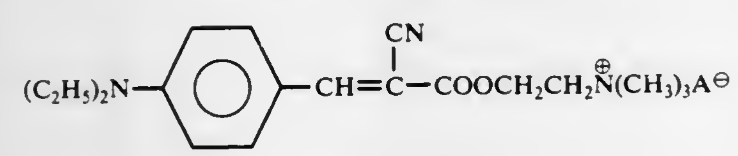

wherein A is an anion,

ii. 30% to 50% of at least one of acetic acid and propionic acid,

iii. 10% to 40% of at least one of acrylic acid and methacrylic acid, and

iv. 3.3% to 4.5% of water.

4,063,883

MANUFACTURE OF FLAME-RETARDANT REGENERATED CELLULOSE FIBRES

Johann Hüpfl, Seewalchen; Manfred Czermak, Timelkam; Helmut Teichmann, and Josef Paul, both of Vocklabruck, all of Austria, assignors to Hoechst Aktiengesellschaft, Frankfurt am Main, Germany and Chemiefaser Lenzing Aktiengesellschaft, Lenzing, Austria

Filed Aug. 14, 1975, Ser. No. 604,489

Claims priority, application Austria, Aug. 20, 1974, 6759/4

Int. Cl.² D01F *2/08*

U.S. Cl. 8—116 P **3 Claims**

1. In the process for making flame-retardant regenerated cellulose fibers by adding flame-retardant phosphorus compounds to viscose, extruding the viscose-containing mixture so obtained into a spinning bath, stretching and after-treating the resulting filaments or staple fibers, the improvement comprising adding as the flame-retardant a combination of triphosphorus pentanitride (component A) with a compound selected from the group consisting of diethylphosphatoethylmethacrylate and N-(oxymethyl)-3-(diethylphosphono)-propionamide (component B), the amount of component A compound being 4–17 weight % and the amount of component B compound being 1–5 weight %, the percentages being based on the quantity of cellulose used.

4,063,884

DURABLY FLAME PROOFED TEXTILE MATERIALS

George T. Miller, Lewiston, N.Y., assignor to Hooker Chemicals & Plastics Corporation, Niagara Falls, N.Y.

Division of Ser. No. 527,105, Nov. 25, 1974, abandoned, which is a continuation of Ser. No. 307,327, Nov. 16, 1972, abandoned. This application Dec. 22, 1975, Ser. No. 642,889

Int. Cl.² D06M *1/00;* **B32B** *27/00*

U.S. Cl. 8—115.5 **12 Claims**

1. The process for producing flame-proofed synthetic fibrous flexible textile materials which comprises treating a normally flammable fibrous synthetic material selected from the group consisting of polypropylene, poly(hexamethyleneadipamide), polycaproamide and poly(m-phenyleneisophthalamide) by first intimately admixing the material with about 0.4 to about 25 percent by weight, based on the weight of material, of a phosphoric acid, and subsequently applying an epoxy compound thereto and reacting said epoxy compound, at a temperature from about 75 to about 150 degrees centigrade, with said phosphoric acid in situ.

12. The process which comprises the steps of impregnating a synthetic fibrous material consisting essentially of poly(m-phenyleneisophthalamide) fibers in an aqueous solution comprising about 7.5 percent by weight of 85 percent by weight orthophosphoric acid, drying said impregnated material, applying to said dried material a 10 percent by weight solution of epoxidized soybean oil in 1,1,1-trichloroethane, distilling the trichloroethane solvent and causing the epoxy compound to react with the phosphoric acid in-situ by heating the material at about 110° centigrade.

4,063,885

SINGLE-TREATMENT RADIATION PROCESS FOR IMPARTING DURABLE SOIL-RELEASE PROPERTIES TO COTTON AND COTTON-POLYESTER BLEND FABRICS

Trinidad Mares; Jett C. Arthur, Jr., both of Metairie, and James A. Harris, Pearl River, all of La., assignors to The United States of America as represented by the Secretary of Agriculture, Washington, D.C.

Filed Feb. 6, 1976, Ser. No. 656,038

Int. Cl.² D06M *9/00;* **C08L** *1/00*

U.S. Cl. 8—115.7 **5 Claims**

1. In a process for imparting soil release and soil repellent properties to cotton and cotton-polyester blend fabrics wherein acrylic-type emulsions or solutions are employed, the improvement characterized by:

a single-treatment, regardless of the fabric construction or composition, consisting of covalently reacting the cotton and polyester with an acrylic-type monomer by

a. irradiating the cotton or cotton-polyester blend fabric to a dosage of 1 megarad,

b. impregnating the fabric of (*a*) with a solution 80:20, respectively, of methanol:water containing about from 2% to 15% of methacrylic acid monomer,

c. reacting the impregnated fabric for about from 15 to 120 minutes at ambient temperature, the time varying with the desired degree of graft polymerization, and

d. washing the unreacted chemicals off the reacted fabric, and drying to obtain a fabric product with a polymer add-on of about from 6% to 22%, which repels and releases aqueous soil and releases oily soil.

4,063,886

MERCERIZING COMPOSITIONS

John R. Powers, Mount Pleasant, and Frances C. Miller, Charleston, both of S.C., assignors to Westvaco Corporation, New York, N.Y.

Filed June 1, 1976, Ser. No. 691,568

Int. Cl.² D06M *1/02*

U.S. Cl. 8—127 **10 Claims**

1. In a process for mercerizing textiles, the improvement which comprises adding to an aqueous caustic solution of mercerizing strength,

at least 0.10% by weight of caustic solution of a wetting agent which comprises a mixture of a nonionic surfactant and a polycarboxylic acid or salt thereof of the formula

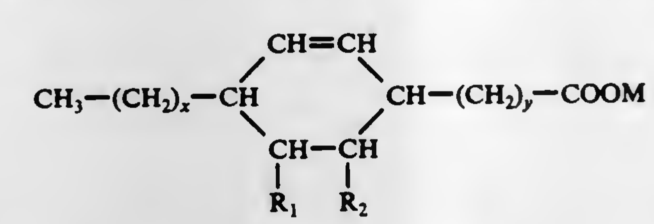

wherein x and y are integers from 3 to 9, x and y together equal 12, R_1 and R_2 are selected from the group of hydrogen and COOM with at least one of R_1 and R_2 being COOM, and wherein M is a member of the group consisting of hydrogen, sodium, potassium, lithium and ammonium, the proportion of nonionic surfactant to polycarboxylic acid or salt thereof being between about 1:0.8 to 1:3.

4,063,887

METHOD FOR IMPROVING THE WATER ABSORPTION OF POLYESTER FIBERS

Alex S. Forschirm, Lake Hiawatha, N.J., assignor to Celanese Corporation, New York, N.Y.

Filed July 22, 1976, Ser. No. 707,588

Int. Cl.² D06M *5/02, 9/04*

U.S. Cl. 8—130.1 **35 Claims**

1. A process for improving the water absorbency of polyester fibers which comprises contacting said polyester fibers at a temperature of from about 20° to about 140° C with an aqueous solution of a hydroxyamine selected from the group consisting of monohydroxyamines, dihydroxyamines, and trihydroxyamines and mixtures thereof and having a pH of at least 7.

4,063,888

PROCESS FOR PREPARING SPACE-DYED YARN

Richard A. O'Connell, El Cerrito, and Robert E. Foster, Concord, both of Calif., assignors to The United States of America as represented by the Secretary of Agriculture, Washington, D.C.

Filed Nov. 23, 1976, Ser. No. 744,582

Int. Cl.² D06B *5/18*

U.S. Cl. 8—149 **2 Claims**

1. A method of space-dyeing yarn, which comprises -

a. winding the yarn on a perforated package dyeing tube, said tube having some of its perforations blocked prior to winding the yarn thereon,

b. blocking an area on the outer surface of the so-wound yarn corresponding to the area blocked on the perforated tube, and

c. providing a flow of dye through the so-wound yarn from the outside of the yarn to the inside and from the inside of the perforated tube to the outside of the yarn, the conditions of dyeing being adjusted to achieve a rapid dye strike, the contact time between the dyebath and the yarn being shorter than in normal dyeing.

4,063,889

HALOSOLVENT DYEING PROCESS FOR POLYESTER WITH CATIONIC DYES HAVING SULFOSUCCINATE ANIONS

Erik Kissa, Wilmington, Del., assignor to E. I. Du Pont de Nemours and Company, Wilmington, Del.

Filed Nov. 24, 1975, Ser. No. 634,437

Int. Cl.² D06P *5/00*

U.S. Cl. 8—168 C **14 Claims**

1. An exhaustion process for dyeing unmodified or acid-modified polyester fibers comprising:

A. introducing the fibers into a dyebath in a goods-to-liquor ratio in the weight range 1:10–1:40, the dyebath comprising:

1. a chlorinated hydrocarbon solvent, with the proviso that when acid-modified polyester fibers are dyed from 0.01 to 0.10% based on the total weight of the dyebath of water must also be present,

2. 0.01 to 1.0% based upon the total weight of the dyebath of a water-insoluble salt of a cationic dye and an alkyl sulfosuccinate anion of the formula

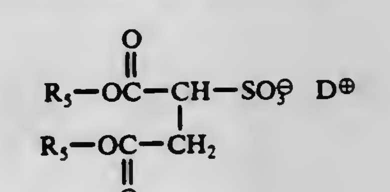

where D^+ is a cationic chromophore having a resonating or delocalized positive charge and the R_5's, alike or different, are alkyl radicals containing from 6 to 13 carbon atoms,

3. 0.05 to 1.0% based on the total weight of the dyebath of at least one low-molecular weight carboxylic acid,
4. 1 to 1.5 mole of water-insoluble sulfosuccinate salt (2) present of a solvent-soluble quaternary ammonium salt of an arylsulfonic acid of the formula

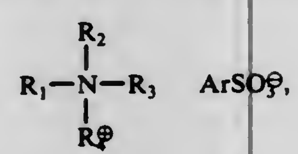

wherein
R_1 and R_2 are alkyl, R_3 and R_4 are alkyl or benzyl, or R_3 and R_4 together form a heterocyclic ring containing the nitrogen atom, or R_2, R_3 and R_4 together form a pyridinium ring, the R groups containing a total of from 12 to 40 carbon atoms; and
Ar is an aryl group substituted with from 1 to 3 substituents selected from the group consisting of H, Cl, Br, NO_2, C_{1-4}alkyl, C_{1-4}alkoxy, $CO_2C_2H_4OH$ and $COCH_3$, and
5. optionally, at least one processing assistant;

B. maintaining the fibers in the dyebath at a temperature of from 110° to 170° C for from 0.5 to 3 hours;
C. removing the dyed fibers from the dyebath and any excess liquor from the fibers; and
D. drying the dyed fibers.

4,063,890
METHOD AND APPARATUS FOR STERILIZING AND STORING CONTACT LENSES
Neville A. Baron, 8 Butterworth Drive, Morristown, N.J. 07960
Continuation of Ser. No. 331,490, Feb. 12, 1973, abandoned. This application Apr. 28, 1976, Ser. No. 680,986
Int. Cl.² A61L *13/00*
U.S. Cl. 21—54 R **6 Claims**

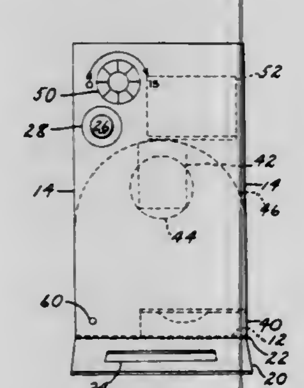

1. A process for asepticizing a light transmitting soft contact lens body of hydrophilic polymeric material which comprises hydrating said lens body with an aqueous liquid medium which is substantillly transparent to radiation in the ultraviolet spectrum; and irradiating said lens body for a timed period of discrete duration while hydrated with said aqueous liquid medium, with ultraviolet radiation of a wavelength sufficient to asepticize said lens body and said aqueous liquid medium in the substantial absence of ozone but insufficient to cause significant molecular modification of said hydrophilic polymeric material.

4,063,891
METHOD FOR DETERMINING THE INORGANIC CARBON CONTENT OF AQUEOUS LIQUIDS
Wolf-Jürgen Becker, Leverkusen, and Alois Ruse, Oberursel, both of Germany, assignors to Bayer Aktiengesellschaft, Leverkusen and Hartmann & Braun Aktiengesellschaft, Frankfurt, both of, Germany
Filed July 16, 1976, Ser. No. 706,100
Claims priority, application Germany, July 31, 1975, 2534257
Int. Cl.² G01N *33/18*
U.S. Cl. 23—230 PC **7 Claims**

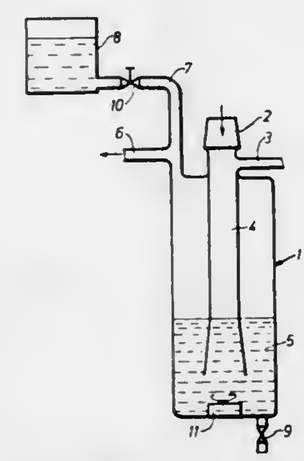

1. A method for determining the inorganic carbon content of aqueous liquids, wherein a liquid sample to be analysed is injected vertically downwards into a reaction chamber containing liquid phosphoric acid, into which is also fed a carbon dioxide-free carrier gas, the sample reacting with the phosphoric acid to form carbon dioxide and water and the carbon dioxide generated is fed to a carbon dioxide analyser.

4,063,892
METHOD FOR THE EARLY DIAGNOSIS OF CANCER
Vassil Ivanov Vassilev; Hristo Vladimirov Goranov, and Sivcho Hristov Sivchev, all of Sofia, Bulgaria, assignors to Nauchno-Proizvodstveno Obedinenie po Veterinarno Delo, Sofia, Bulgaria
Filed May 3, 1976, Ser. No. 682,963
Claims priority, application Bulgaria, May 5, 1975, 29867
Int. Cl.² G01N *33/16, 21/02*
U.S. Cl. 23—230 B **3 Claims**

1. A method of detecting cancer in humans which comprises the steps of:
a. obtaining a blood sample from a patient to be screened for cancer;
b. separating cellular matter from the blood plasma of said sample;
c. treating said blood plasma with Brockmann aluminum oxide;
d. subjecting a portion of the plasma treated with Brockmann aluminum oxide to spectrophotometric analysis at wavelengths of 562, 576 and 610 nm to obtain first extinction values at each of said wavelengths;
e. diluting another portion of the plasma treated with Brockmann aluminum oxide to dilution with a standard diluent to produce a diluted specimen;
f. subjecting said diluted specimen to spectrophotometric analysis at wavelengths of 562, 576 and 610 nm to obtain respective second values of total extinction at said wavelengths;
g. deriving a value A corresponding to the percentage decrease in the first and second values at said wavelengths of 576 nm deriving a value B corresponding to the difference in the extinction of second values between the wavelengths of 562nm and 610 nm, and deriving a value C corresponding to the difference between the change in first extinction values at 576 nm to 562 nm and the change in said second values from 576 nm to 562 nm; and
h. deriving a coefficient $K = (A + B/C)$

where a K value less than 95 represents a statistically significant probability of cancer and a K value above 105 represents a statistically significant probability absence of cancer.

4,063,893
DYE STABILIZED TRISODIUM PHOSPHATE CLEANING SOLUTION
Arthur C. Stoulil, and William G. Stoulil, both of 10348 La Canada Way, Sunland, Calif. 91040
Filed Sept. 13, 1976, Ser. No. 723,037
Int. Cl.² G01N *21/06*
U.S. Cl. 23—230 R **12 Claims**

1. A method of detecting the presence of aqueous cleaning solutions of trisodium phosphate in kitchen ware comprising the steps of forming said solution with tap water having an electrical conductance and filtered with activated charcoal, and admixing a color indicating dye in said solution whereby the color imparted by said dye will not fade or settle-out of solution, said dye selected from the group consisting of:
a. disulfonate copper phthalocyanine,
b. Alizarine Sapphire,
c. tetraethylrhodamine, or
d. a mixture of approximately equal parts of Alizarine Cyanone Green G and Fast Wool Yellow.

4,063,894
TEST STRIP FOR THE DETECTION OF OCCULT BLOOD IN EXCRETA
Yasunao Ogawa, Ikeda, and Yukio Yonetani, Nara, both of Japan, assignors to Shionogi & Co., Ltd., Osaka, Japan
Filed Oct. 19, 1976, Ser. No. 733,913
Claims priority, application Japan, Nov. 21, 1975, 50-140428
Int. Cl.² C09K *3/00;* G01N *31/22, 33/16*
U.S. Cl. 23—230 B **18 Claims**

17. A method for detecting occult blood in excreta or body fluids, which comprises contacting the excreta or body fluids with a test strip or a composition comprising a chromogen, a hydroperoxide and, as a sensitizer, a thiazole compound (I) of the formula:

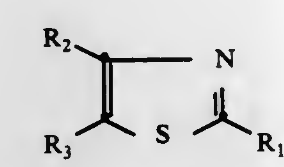

wherein R_1 is an alkyl, a substituted or unsubstituted aralkenyl, or a substituted or unsubstituted aralkyl; R_2 and R_3 are each a hydrogen or a lower alkyl; and R_2 and R_3, when taken together with the adjacent carbon atoms, may form a benzene ring.

4,063,895
METHANE ANALYZER
Radhakrishna Murty Neti, Brea, and Ray Lawrence Roggenkamp, Fountain Valley, both of Calif., assignors to Beckman Instruments, Inc., Fullerton, Calif.
Filed July 12, 1976, Ser. No. 704,268
Int. Cl.² B01J *1/10;* G01N *21/26*
U.S. Cl. 23—232 R **14 Claims**

1. The method of measuring the quantity of methane in a gas sample comprising the steps of:
a. passing the gas sample through an enclosed space having a source therein emitting light energy including wavelengths approaching but not less than 147 nm at a flow rate sufficiently slow to cause any hydrocarbon molecules in the gas sample to attain a superactive state;
b. exposing the gas sample containing said superactive hydrocarbon molecules to ozone in excess for a time sufficient to photo-oxidize all non-methane hydrocarbons and photo-oxidize any methane in a known proportional amount;
c. measuring the quantity of hydrocarbons in the photo-oxidized gas sample whereby the quantity of methane in the photo-oxidized gas sample is determined; and,

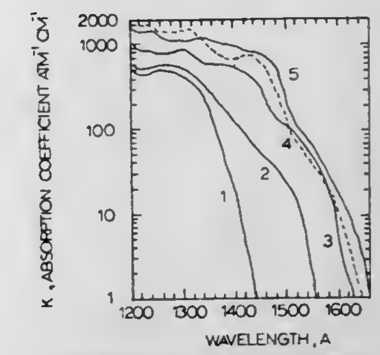

ABSORPTION SPECTRA OF SOME PARAFFIN HYDROCARBONS; (1) METHANE [$CH_4(g)$]; (2) ETHANE [$C_2H_6(g)$]; (3) PROPANE [$C_3H_8(g)$]; (4) PERDEUTERO-N-BUTANE [$n\text{-}C_4D_{10}(g)$]; (5) n-BUTANE [$n\text{-}C_4H_{10}(g)$].

d. rescaling the quantity measured in step (c) as a function of the proportional photo-oxidation of methane effected in step (b) whereby the quantity of methane in the original un-photo-oxidized gas sample is determined.

4,063,896
REMOVAL OF PHOSGENE IMPURITY FROM BORON TRICHLORIDE BY LASER RADIATION
James A. Merritt, Pulaski, and Lawrence C. Robertson, Fayetteville, both of Tenn., assignors to The United States of America as represented by the Secretary of the Army, Washington, D.C.
Filed Dec. 27, 1976, Ser. No. 754,304
Int. Cl.² B01J *1/10*
U.S. Cl. 23—254 R **7 Claims**

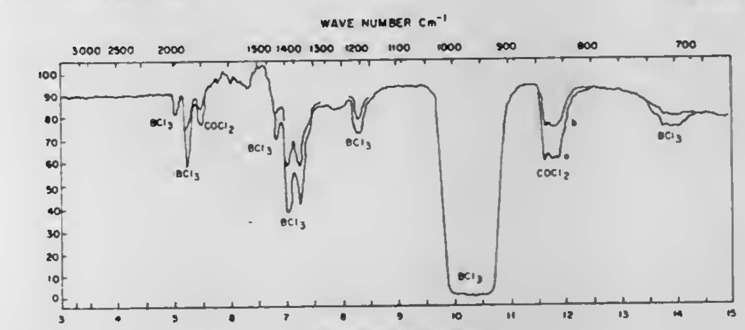

1. A method for dissociation of $COCl_2$ by laser irradiation of $COCl_2$ in presence of a gaseous compound selected from BCl_3 and C_2H_4, said selected gaseous compound when BCl_3 having a fundamental whose energy is close to that of one of the $COCl_2$ fundamentals and said selected gaseous compound when C_2H_4 having combination bands and overtones that match reasonably close to the energy of $COCl_2$ so that a transfer of energy takes place between said selected gaseous compounds and said $COCl_2$ when irradiated by laser radiation to effect dissociation of said $COCl_2$ when irradiated by laser radiation to effect dissociation of said $COCl_2$, said method comprising:
i. metering said selected gaseous compound and said $COCl_2$ in admixture into a laser cell to achieve a predetermined pressure of said selected gaseous compound and said $COCl_2$ which comprise the gaseous components in said laser cell, said predetermined pressure to ensure consonance between the concentration of said gaseous components and the power level of a cw CO_2 multiline laser employed to irradiate said gaseous compound and said $COCl_2$ to effect dissociation of said $COCl_2$;
ii. irradiating said selected gaseous compound and said $COCl_2$ in admixture by a cw CO_2 multiline laser at a predetermined power level of said cw CO_2 multiline laser for a predetermined time period to effect dissociation of said $COCl_2$; and,
iii. obtaining a spectra of the static products of said admix-

ture to detect said dissociation products of said $COCl_2$ and to determine when all the $COCl_2$ has been dissociated into dissociation products which are substantially CO and Cl_2 and said spectra to additionally detect any appreciable depletion of said selected gaseous compound.

4,063,897
SOLID ELECTROLYTE TYPE AIR-FUEL RATIO DETECTOR
Keiji Aoki, Susono, Japan, assignor to Toyota Jidosha Kogyo Kabushiki Kaisha, Toyota, Aichi, Japan
Filed June 7, 1976, Ser. No. 693,629
Claims priority, application Japan, Mar. 15, 1976, 51-29771[U]
Int. Cl.² G01N *27/12*
U.S. Cl. 23—254 E **1 Claim**

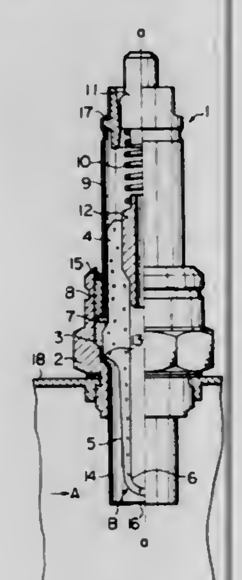

1. In a solid electrolyte type air-fuel ratio detector for use in an internal combustion engine having piping means for leading the exhaust gas from the engine cylinder to the atmosphere, said detector having a housing fixed to said piping means and a detecting element disposed in said housing, said detecting element having a solid electrolyte and a detecting portion which projects into said piping means so as to expose the detecting portion to the exhaust gas stream, the outer surface of the detecting portion being covered by a thin layer of platinum wherein the improvement comprises means for preventing the exhaust gas from directly impinging upon the detecting portion, said means comprising an impermeable metallic covering made of heat resistant material and disposed normal to the direction of exhaust gas flow for covering the detecting portion of the detecting elemenet, said covering having a lower end face disposed substantially parallel to the direction of the exhaust gas flow, and at least one hole formed in said lower end face for causing the exhaust gas to turn through 90° to diffuse to the outer surface of the detecting portion.

4,063,898
COMBUSTIBLE GASES DETECTOR
Edward William Fisher, Alliance, Ohio, assignor to Bailey Meter Company, Wickliffe, Ohio
Filed Sept. 20, 1976, Ser. No. 724,682
Int. Cl.² G01N *25/20, 25/30, 31/10;* **H01L** *35/00*
U.S. Cl. 23—254 E **12 Claims**

1. A detector for monitoring combustible gases in an airstream comprising:
a first thermocouple junction located in the airstream;
a second thermocouple junction located in the airstream and connected to said first thermocouple to form a differential thermocouple;
catalytic means formed around said first thermocouple junction allowing heated combustibles in the airstream to react with said catalytic means to liberate heat and increase the temperature of said first thermocouple above that of said second thermocouple;
insulation means formed around said second thermocouple junction to prevent combustibles in the airstream from reacting with said second thermocouple junction to liberate heat including a tube of non-catalytic material

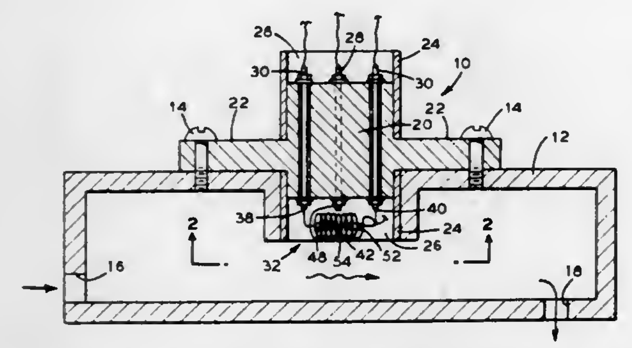

mounted on said second thermocouple junction with a non-catalytic cement material formed around said non-catalytic tube; and
means connected to said first and second thermocouple junctions for indicating the temperature differential between said first and second thermocouple junctions.

4,063,899
DECARBONATING A GAS WITH A WETTED FILTER
Jacques Cheron, Maisons-Laffitte, and Dany Catoire, Genevilliers, both of France, assignors to Institut Francais du Petrole, France
Filed Nov. 7, 1974, Ser. No. 521,902
Claims priority, application France, Nov. 26, 1973, 73.42263
Int. Cl.² B01J *1/22;* **B01D** *53/14;* **B01J** *8/02*
U.S. Cl. 23—284 **19 Claims**

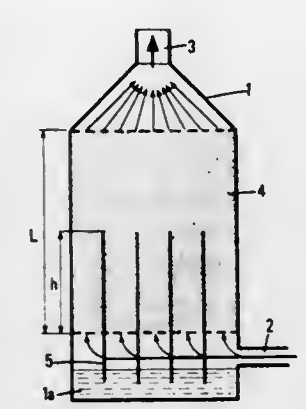

1. A device for decarbonating a flow of gas or gas mixture containing carbon dioxide, this device comprising a vessel provided with an inlet orifice for the gas to be decarbonated, and an outlet orifice for recovering the decarbonated gas, a filtering cartridge containing a CO_2-absorbent, this filtering cartridge being positioned between said inlet and outlet orifices so as to be traversed by the whole gas flow, the device further comprising means for compensating, at least partially, any decrease in the water content of the CO_2-absorbent, said compensating means comprising a water source means and at least one hollow element for continuously transferring water from said water source means to said filtering cartridge, said hollow element penetrating into the filtering cartridge and having a perforated outer surface in contact with the CO_2-absorbent, and said hollow element being connected to said water source means, said compensating means maintaining the water content of the CO_2-absorbent in the range of 10 to 30%.

4,063,900
PELLET TYPE CATALYTIC CONVERTER
Yasuhiro Mita, Higashi-yamato; Minoru Uchino, Yokohama, and Masato Sasaki, Tokyo, all of Japan, assignors to Nissan Motor Company, Limited, Yokohama, Japan
Filed Oct. 1, 1976, Ser. No. 728,852
Claims priority, application Japan, Oct. 3, 1975, 50-118943
Int. Cl.² F01N *3/15;* **B01J** *35/04*
U.S. Cl. 23—288 F **7 Claims**

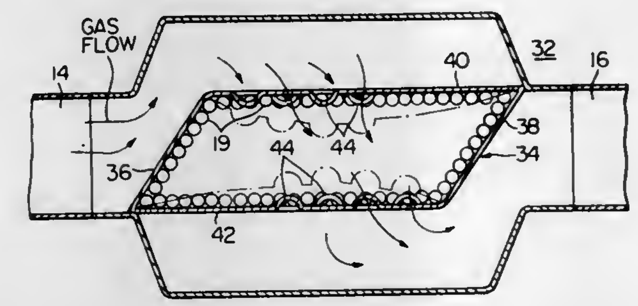

1. In a catalytic converter for catalytically treating the exhaust gases emitted from an internal combustion engine, including a container, exhaust gas inlet means at one end of said container, exhaust gas outlet means at the other end of said container, and a catalyst pellet casing supported within said container and having on at least a part of its wall portions a plurality of louvers defining respective openings through the said part of the wall portions which provide fluid communication between the interior and the exterior of said casing and allow the exhaust gases from said inlet means to pass through the interior of said casing to said exhaust gas outlet means, said casing being packed with a plurality of catalyst pellets, the improvement comprising:
each of said louvers comprising an elongated strip portion having its longitudinal ends integrally attached to said wall portion and a central unsupported portion projected toward the inside of said casing while crossing directly over the corresponding louver opening, whereby when said casing is heated, the louvered wall portions will tend to curve due to expansion forces toward the inside of said casing.

4,063,901
METHOD OF MANUFACTURING A SEMICONDUCTOR DEVICE
Hiroshi Shiba, Tokyo, Japan, assignor to Nippon Electric Company, Ltd., Tokyo, Japan
Filed Mar. 29, 1977, Ser. No. 782,418
Claims priority, application Japan, Mar. 31, 1976, 51-35824
Int. Cl.² B01J *17/00*
U.S. Cl. 29—578 **7 Claims**

1. A method of manufacturing a semiconductor device comprising the steps of forming a polycrystalline silicon layer over a major surface of a semiconductor substrate, introducing a first kind of impurity into a first portion of said polycrystalline silicon layer to its entire thickness, thereby providing a first doped region, coverting a peripheral of said first doped region into an insulator, and introducing a second kind of impurity into a second portion of said polycrystalline silicon layer to its entire thickness, thereby providing a second doped region, said

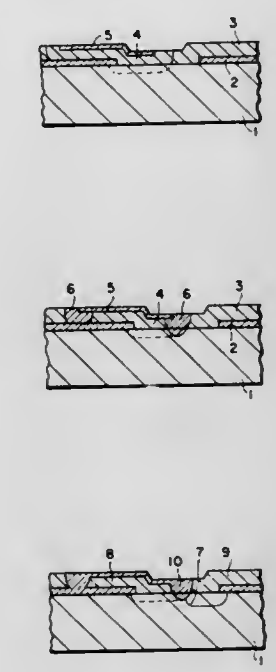

first and second doped regions serving as electrical connection to regions in said semiconductor substrate.

4,063,902
METHOD OF MAKING A GALVANIC CELL HAVING A RESEALABLE VENT CLOSURE
Henry Heinz, Jr., Berea, Ohio, assignor to Union Carbide Corporation, New York, N.Y.
Division of Ser. No. 671,674, March 29, 1976, Pat. No. 4,020,241. This application Jan. 28, 1977, Ser. No. 763,501
Int. Cl.² H01M *2/08*
U.S. Cl. 29—623.2 **8 Claims**

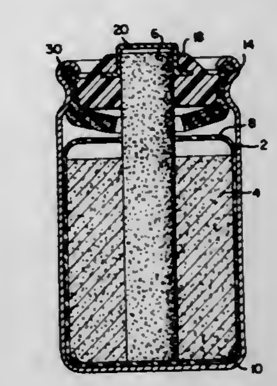

1. A method for making a galvanic dry cell having a low pressure resealable vent closure which comprises the steps:
a. placing within a container having a top open end and an inner disposed anode, a porous separator to contact the anode, a cathode depolarizer mix so as to be disposed within said separator, a cathode collector rod so as to be partially embedded within the center of the cathode depolarizer mix such that the rod projects above the top surface of the depolarizer mix, and an electrolyte;
b. preparing a gas impermeable resiliently compressible elastomeric sponge gasket having a central opening with a diameter equal to or larger than the diameter of the cathode collector rod and an outer diameter larger than the diameter of the container;
c. aligning the sponge gasket over the cathode collector rod and resting it on the top edge of the open end of the container;
d. preparing a cover having a central recess substantially equal to the diameter of the cathode collector rod and an outer diameter equal to the inner diameter of the container minus at most about two times the thickness of the sponge gasket;
e. placing the cover over the top of the container with the

recess aligned with the cathode collector rod and then forcing the cover into the container thereby compressing the sponge gasket between the cover and the inner upper wall of the container; and

f. crimping the top edge portion of the container over the sponge gasket.

4,063,903

APPARATUS FOR DISPOSAL OF SOLID WASTES AND RECOVERY OF FUEL PRODUCT THEREFROM

Robert M. Beningson; Herbert E. Beningson, both of Stamford, Conn.; Narayanankutty V. P. Menon, Jamaica, N.Y.; Ravindra M. Nadkarni, Arlington; Thomas J. Lamb, Lexington; Lee K. Fox, Waltham, and William V. Keary, Wayland, all of Mass., assignors to Combustion Equipment Associates Inc., New York, N.Y.

Filed Sept. 8, 1975, Ser. No. 611,368

Int. Cl.² C10L *5/22;* **B30B** *11/00;* **E06B** *9/04*

U.S. Cl. 44—2 **51 Claims**

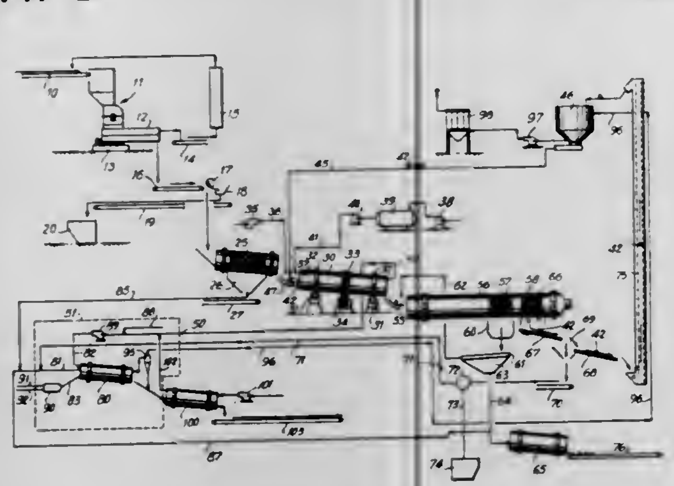

46. An apparatus for the processing and disposal of solid wastes and the converting of the organic fraction thereof into a fuel product comprising, in combination

a. shredding means to reduce the particle size of solid waste containing organic and inorganic fractions to form a shredded feed material;

b. primary separating means for separating out insufficiently shredded material from said shredded feed material and means to return said insufficiently shredded material to said shredding means;

c. magnetic separating means for removing magnetic material from said shredded feed material;

d. fines separating means to remove the film including glass, dirt, and sand from said shredded feed material,

e. acid applying means for distributing an acid reagent onto said shredded feed material;

f. grinding media;

g. a shredded feed material drying/heating means;

h. grinding means to reduce the organic fraction of said shredded feed material, embrittled by acid and heat, to a finely divided fuel product;

i. grinder discharge separating means for separating upon discharge from said grinding means said grinding media and the unembrittled fraction of said shredded feed material from the embrittled organic fraction containing said fuel product;

j. means for separating said grinding media from said unembrittled fraction;

k. means for separating said finely divided fuel product from insufficiently ground embrittled material and means to return said insufficiently ground embrittled material to said grinding means;

l. burner/sterilizer means for burning said fines from said fines separating means and said unembrittled fraction from said grinder discharge separating means thereby to provide hot sterile gases and a sterile solid residue;

m. heat transfer means to use said hot sterile gases to heat said grinding media; and

n. means to circulate said grinding media after heating in contact with said shredded feed material in said drying/heating means and then in said grinding means.

4,063,904

SELF-CONTAINED FIRE PACKAGE

Frank C. Beeson, P.O. Box 5534, Eugene, Oreg. 97405

Filed Nov. 18, 1975, Ser. No. 632,967

Int. Cl.² C10L *11/00*

U.S. Cl. 44—40 **9 Claims**

1. A self-contained fire package comprising:

means defining an enclosed space for containing fuel; and fuel means disposed within said space including

a first plurality of fuel elements which are stacked, with the stacks thereof arranged in a generally U-shaped configuration so as to form a pocket partially bounded by the stacks, and

a second plurality of fuel elements, smaller than the elements in said first plurality of fuel elements, distributed at random within said pocket.

2. The package of claim 1 which further includes first opening-enabling means formed in said means defining said enclosed space for enabling the selected creation in the latter of an opening over and exposing at least a portion of the top of said pocket, and second opening-enabling means also formed in said means defining said enclosed space enabling the selected creation in the latter of an opening in front of and at least partially exposing the front of said pocket.

3. The package of claim 1 which further includes tinder means distributed within said pocket adjacent said second plurality of fuel elements.

4,063,905

FUEL MIXER

Roy Henry Johnson, and Donald K. Graham, both of Decatur, Ill., assignors to Borg-Warner Corporation, Chicago, Ill.

Filed Dec. 22, 1976, Ser. No. 753,327

Int. Cl.² B01F *3/02*

U.S. Cl. 48—180 R **9 Claims**

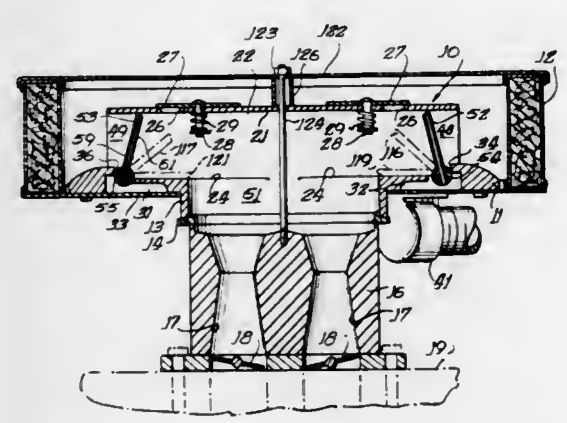

1. A fuel mixer for an internal combustion engine having an induction passage provided with a throttle member, said mixer including:

a body having wall portions defining an inlet air passage, an inlet fuel passage, and a common outlet passage arranged for communication with each other, said common outlet passage being adapted for communication with said engine induction passage, said fuel inlet passage including a fuel recess disposed adjacent said air inlet passage communicating with said air inlet passage through a wall portion of said body, said fuel inlet passage further including movable fuel metering means arranged for regulating flow of fuel in said fuel recess, said air inlet passage including an air valve door pivotally mounted in said body for hinged movement toward and from a wall portion of said air inlet passage providing means for variably restricting air flow in said air inlet passage, said air valve door including means for ducting fuel from said fuel recess into said air inlet passage, and control linkage mounted on said body adjacent said air inlet passage connected to said air valve door and said fuel metering means, said control linkage including resilient bias means arranged for regulating movement of said valve door in accordance with manifold depression in said induction passage and further including operating means connected to said fuel metering means and said air valve door arranged for regulating movement of said fuel metering means in accordance with movement of said air valve door.

4,063,906

METHOD FOR GRINDING ELONGATED CYLINDRICAL WORKPIECES WHICH ARE ADVANCED DURING THE GRINDING OPERATION WHILE BEING ROTATED ABOUT THE LONGITUDINAL AXIS THEREOF

Walter Wetzels, Eynatten, Belgium, assignor to SCHUMAG Schumacher Metallwerke Gesellschaft mit beschränkter Haftung, Aachen, Germany

Filed Aug. 11, 1976, Ser. No. 713,571

Claims priority, application Germany, Aug. 21, 1975, 2537151

Int. Cl.² B24B *1/00*

U.S. Cl. 51—289 R **16 Claims**

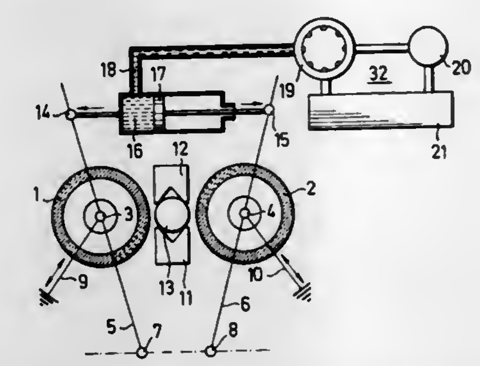

1. Method of grinding elongated, cylindrical workpieces in continuous operation in a grinding machine wherein the workpieces are advanced while they are rotated about the longitudinal axes thereof, which comprises exerting a pulsating grinding pressure transversely to the longitudinal axis of the workpiece and adjusting the frequency of the pulsations to lie substantially in low-to-medium frequency range outside the frequency ranges of resonant vibrations of parts of the workpiece and of the grinding machine.

4,063,907

MODIFYING THE SURFACE OF DIAMOND PARTICLES

Minyoung Lee, Schenectady; Lawrence E. Szala, Scotia, and Louis E. Hibbs, Jr., Schenectady, all of N.Y., assignors to General Electric Company, Schenectady, N.Y.

Filed July 28, 1975, Ser. No. 599,941

The portion of the term of this patent subsequent to Mar. 8, 1994, has been disclaimed.

Int. Cl.² B24D *3/34;* **C23C** *17/02*

U.S. Cl. 51—295 **6 Claims**

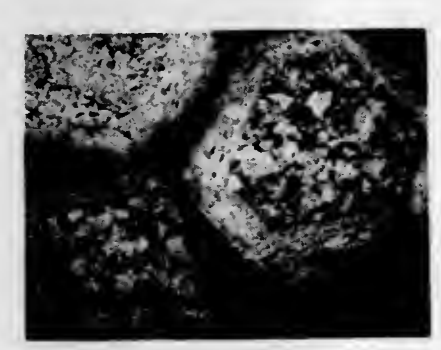

1. A process for producing diamond abrasive particles having a rough adherent covering which comprises providing milling balls consisting essentially of plastic or elastomer having a diameter ranging from about 1/16 inch to about ¼ inch, providing particles of a metal compound which is decomposible or reducible at atmospheric pressure at a temperature ranging from about 800° C to 1400° C to produce metal and gaseous product of decomposition, said metal compound being selected from the group consisting of molybdenum sulfide, tungsten sulfide, titanium sulfide, niobium sulfide, tantalum sulfide, chromium chloride, zirconium sulfide, and mixtures thereof, providing diamond particles ranging in size from about 10 microns to 2000 microns, milling said milling balls and said particles of metal compound and diamond mechanically smearing a coating of said metal compound onto the surface of said diamond particles coating said compound on at least 50 percent to about 100 percent of the surface area of said diamond particles, said milling balls having a shape and sufficient elasticity and resiliency to effect said mechanical smearing, recovering the metal compound-coated diamond particles, and firing said metal compound-coated diamond particles in a reducing or inert atmosphere at a temperature ranging from at least about 800° C to 1400° C decomposing or reducing the metal compound and producing said abrasive particles, said abrasive particle consisting essentially of a diamond particle having a rough granular adherent covering consisting essentially of an outside surface coating ranging in composition from said metal to a carbide of said metal with all composition ratios of said metal and metal carbide falling within said range, and a layer of carbide of said metal intermediate said surface coating and said diamond particle chemically bonding said surface coating to said diamond particle, said covering being discontinuous or continuous and covering from at least 50 percent to about 100 percent of the surface area of said diamond particle.

4,063,908

PROCESS FOR MANUFACTURING CERAMIC CUTTING TOOL MATERIALS

Kazuki Ogawa; Michito Miyahara, and Mitsuhiko Furukawa, all of Fukuoka, Japan, assignors to Nippon Tungsten Co., Ltd., Fukuoka, Japan

Filed Jan. 21, 1976, Ser. No. 650,831

Int. Cl.² C04B *35/56*

U.S. Cl. 51—307 **4 Claims**

1. A process for manufacturing ceramic cutting tool materials which comprises mixing and thoroughly blending titanium carbide powder, titania powder and alumina powder to form a powder mixture consisting of 19–70% titanium carbide by weight, 1–10% titania by weight and the remainder alumina and having greatly improved sinterability and hot-pressing the thus prepared mixture at a temperature of 1500°–1700° C to form a sintered body of the mixture having a fine, dense structure as well as high mechanical strength due to the intermediate action of titanium oxide which enhances the binding between alumina and titanium carbide.

4,063,909

ABRASIVE COMPACT BRAZED TO A BACKING

Robert Dennis Mitchell, 5, Trefnant Road, Evans Park, Johannesburg, South Africa

Filed Sept. 9, 1975, Ser. No. 611,811

Claims priority, application South Africa, Sept. 18, 1974, 74/5930; June 17, 1975, 75/3863

Int. Cl.² B24D *3/06*

U.S. Cl. 51—309 R **14 Claims**

1. In an abrasive body comprised by a backing of cemented tungsten carbide or steel, and an abrasive compact secured by a surface of said compact to a surface of said backing, said abrasive compact comprising abrasive particles selected from diamond, cubic boron nitride, and mixtures thereof, said abrasive particles being bonded into a hard conglomerate by a matrix metal that is capable of dissolving the abrasive particles at least to a limited extent, there being intergrowth between said abrasive particles, and said abrasive particles being present in an amount of at least 70 volume percent of said compact; the improvement comprising, disposed between said surface of

said compact and said surface of said backing, a continuous layer of high temperature braze metal selected from titanium, chromium, manganese, vanadium, molybdenum, platinum,

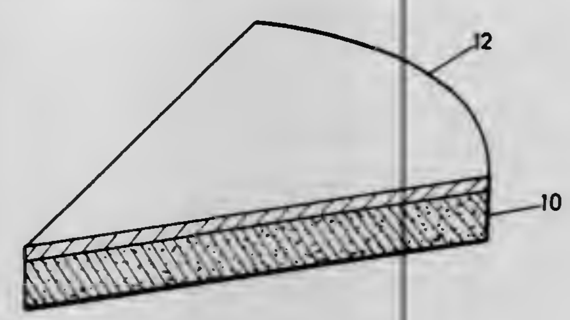

iron, cobalt and nickel and alloys containing one or more of these metals, said layer having a thickness less than 0.5 mm, said compact being secured to said backing through said continuous layer.

4,063,910

APPARATUS FOR AUTOMATICALLY ADJUSTING THE FREQUENCY OF PIEZOELECTRIC RESONATORS IN THE FORM OF BARS OR PLATES

Raymond Huguenin, Port; Hubert Matthey, Brugg, and Martial Voumard, Bienne, all of Switzerland, assignors to Societe Suisse pour l'Industrie Horlogere Management Services S.A., Bienne, Switzerland

Division of Ser. No. 721,724, Sept. 9, 1976. This application Mar. 17, 1977, Ser. No. 778,818

Claims priority, application Switzerland, Sept. 12, 1975, 11889/75

Int. Cl.² B24B *49/00;* **B24C** *3/32*

U.S. Cl. 51—413 **7 Claims**

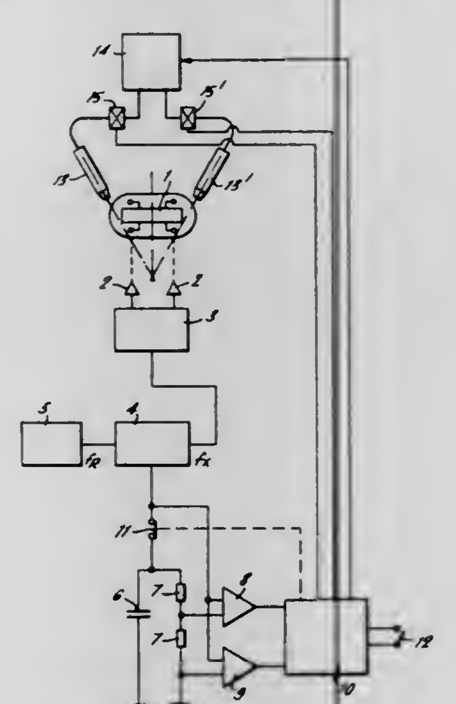

1. Apparatus for automatically adjusting the frequency of a piezoelectric resonator in the form of a bar or plate, said apparatus comprising:

means for applying a voltage to said resonator to cause it to resonate;

means for measuring the frequency of said resonator continuously during a frequency adjusting cycle;

means for continuously comparing said measured frequency with a desired frequency to obtain a difference frequency value;

means for storing said difference frequency value at the beginning of an adjusting cycle;

means for deriving from said difference frequency value a threshold value equal to one half of said difference frequency value;

means for comparing said threshold value with said difference frequency value; and,

means responsive to said comparing means for removing material from a first extremity of said resonator as long as said difference frequency value is greater than said threshold value.

4,063,911

HIGH TEMPERATURE POLAR STATIONARY LIQUID PHASE FOR GAS CHROMATOGRAPHY

Richard F. Kruppa, State College, Pa., and Arthur Edward Coleman, Troy, N.Y., assignors to Applied Science Laboratories, Inc., State College, Pa. and Silar Laboratories, Inc., Watervliet, N.Y.

Continuation-in-part of Ser. No. 379,988, July 17, 1973, abandoned. This application Jan. 14, 1976, Ser. No. 574,868

Int. Cl.² B01D *15/08*

U.S. Cl. 55—67 **4 Claims**

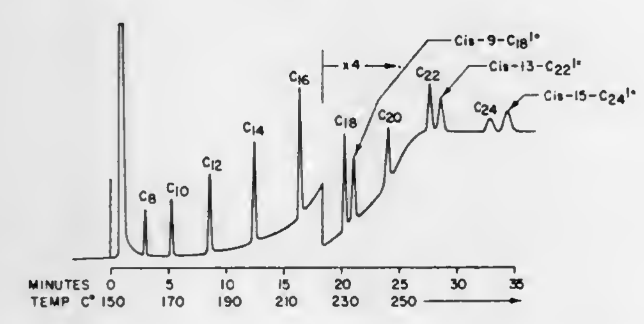

1. A column for conducting gas-liquid chromatographic separations, said column exhibiting moderately high polarity in the temperature range of 20° to 275° C and filled with a packing containing a liquid phase having recurring units of the following formula:

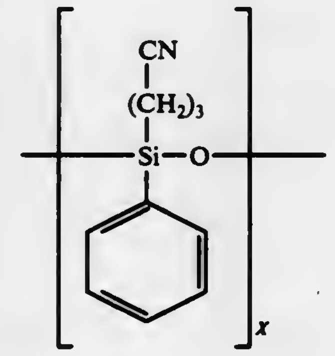

Where X is a whole number greater than 2.

4,063,912

GASEOUS PHASE ADSORPTION USING PARTIALLY PYROLYZED POLYMER PARTICLES

James W. Neely, Levittown, and Steven L. Rock, Ambler, both of Pa., assignors to Rohm and Haas Company, Philadelphia, Pa.

Continuation-in-part of Ser. No. 550,500, Feb. 18, 1975, abandoned. This application Feb. 2, 1976, Ser. No. 654,265

Int. Cl.² B01D *53/04*

U.S. Cl. 55—74 **12 Claims**

1. A process for separating a component from a gaseous mixture which comprises contacting the mixture with particles of a partially pyrolyzed macroporous synthetic polymer produced by the controlled thermal degradation of a macroporous synthetic polymer containing a carbon-fixing moiety and derived from one or more ethylenically unsaturated monomers, or monomers which are condensed to yield macroporous polymers, or mixtures thereof, which partially pyrolyzed macroporous synthetic polymer contains: (a) at least 85% by weight of carbon, (b) multimodal pore distribution with macropores ranging in size from about 50 A to about 100,000 A in average critical dimension and (c) a carbon to hydrogen atom ratio of between about 1.5 : 1 and 20 : 1.

4,063,913

BACTERIA FILTERS WITH TRANSPARENT HOUSINGS

Edward A. Kippel, Suffern, N.Y., and Paul O. Huston, Montville, N.J., assignors to Becton, Dickinson and Company, East Rutherford, N.J.

Continuation-in-part of Ser. No. 500,405, Aug. 26, 1974, abandoned. This application Mar. 23, 1976, Ser. No. 669,622

Int. Cl.² B01D *46/50*

U.S. Cl. 55—274 **2 Claims**

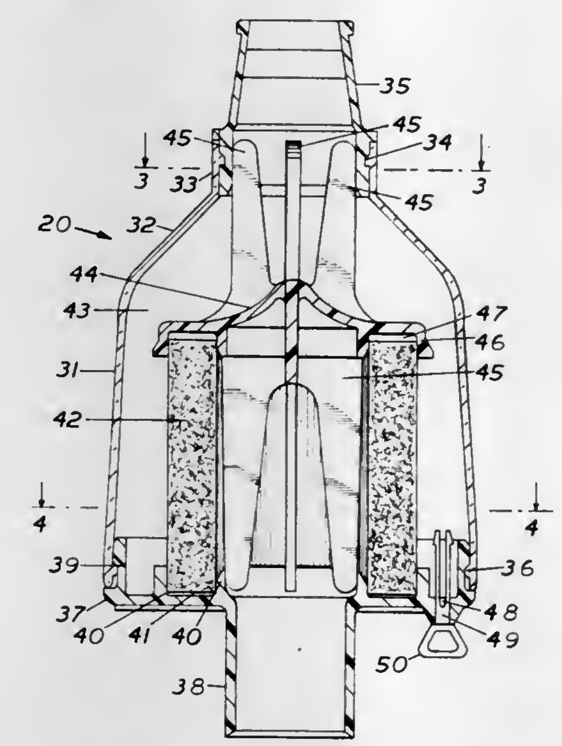

1. A bacteria filter for use in anesthesiology and respiratory air systems to filter fluid flow at a desired point in a system comprising:

an enlarged electrically non-conductive, transparent tubular housing having a passageway therethrough and having at one end a reduced tip;

an electrically conductive connector mounted to the reduced tip;

an electrically conductive end cap affixed to the end of the housing distal from the reduced tip;

the end cap having an opening therethrough terminating in a projecting end cap connector;

a filter element mounted in the housing;

an electrically conductive portion extending between the end cap and the electrically conductive connector to provide an electrically conductive pathway from end to end of the filter;

the connector and the projecting end cap connector being adapted to be mounted within a fluid flow system to permit fluid communication with the interior of the housing;

means between said connector and the projecting end cap providing a fluid flow from said system through one end of the housing, through the filter element and out of the other end; and

the electrically conductive portion extending between the end cap and the electrically conductive connector being a finned element extending axially through the tubular housing between the end cap and the electrically conductive connector so as to provide an electrically conductive pathway from end to end of the filter.

4,063,914

METHOD OF PRODUCING AN OPTICAL FIBER

Erwin Roeder, and Edmund Steinbeck, both of Aachen, Germany, assignors to U.S. Philips Corporation, New York, N.Y.

Continuation of Ser. No. 620,298, Oct. 7, 1975, abandoned. This application Feb. 16, 1977, Ser. No. 769,008

Claims priority, application Germany, Oct. 10, 1974, 2448363

Int. Cl.² C03B *37/02*

U.S. Cl. 65—2 **4 Claims**

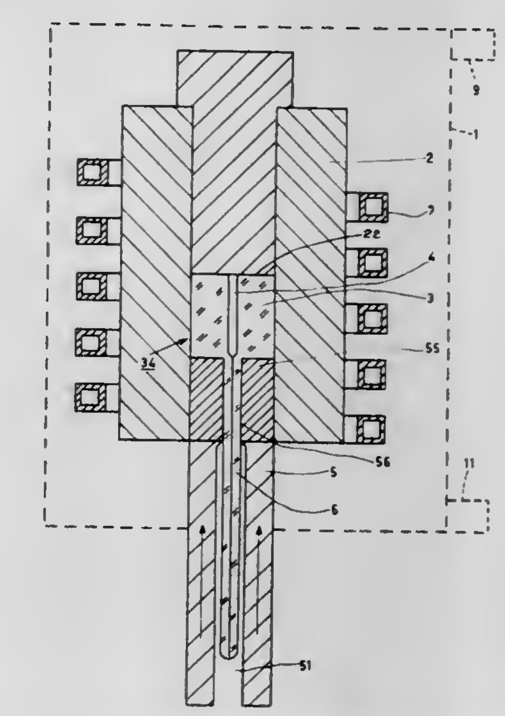

1. A method of producing an optical fibre by extruding close tolerance multi-component coaxial material, comprising the sequential steps of forming a circular cylindrical body of inorganic glass sheath cladding material having a coaxial circular cylindrical bore, and placing a circular cylindrical body of inorganic glass core material in said bore, said bodies as placed together being a block of material to be extruded, said cladding and core materials having different properties, with said components arranged in relative position and geometry the same as that desired in the finished product; placing the block of material in a block holder in an extruding press having the block holder and an extrusion die aligned coaxially with the block of material; heating said block of material to a plastic state before applying said extruding pressure; and then extruding said material by applying extruding pressure to the extrusion die so as to move the die with respect to the block holder in a direction opposite the discharge direction of the extruded material, thereby producing an extruded rod having a constant ratio of core diameter to sheath diameter along the rod length and drawing said rod into an optical fibre.

4,063,915

MARBLE MELT GLASS FIBER FEED SYSTEM

Thomas J. Briar, Trafford, and Thomas C. Bour, Glenshaw, both of Pa., assignors to PPG Industries, Inc., Pittsburgh, Pa.

Continuation-in-part of Ser. No. 638,247, Dec. 8, 1975, abandoned. This application Oct. 26, 1976, Ser. No. 735,463

Int. Cl.² C03B *37/02*

U.S. Cl. 65—11 R **10 Claims**

1. Apparatus for feeding glass marbles directly to a fiber forming bushing comprising a container having an elongate slot-like opening at or near the bottom therein, the height of said opening being not less than three times the diameter of glass marbles contained in said container, a pre-melter connected to said bushing and having an elongate slot-like opening therein for receiving glass marbles, said opening having a

width not less than two times the diameter of said glass marbles, and a chute connecting said container to said pre-melter, said chute having a main body and having an opening at either end corresponding to the dimensions of the openings of said pre-melter and said container, said chute having its side to side dimension sufficient to accommodate flow of a plurality of marbles in side-by-side relation to provide feed of marbles

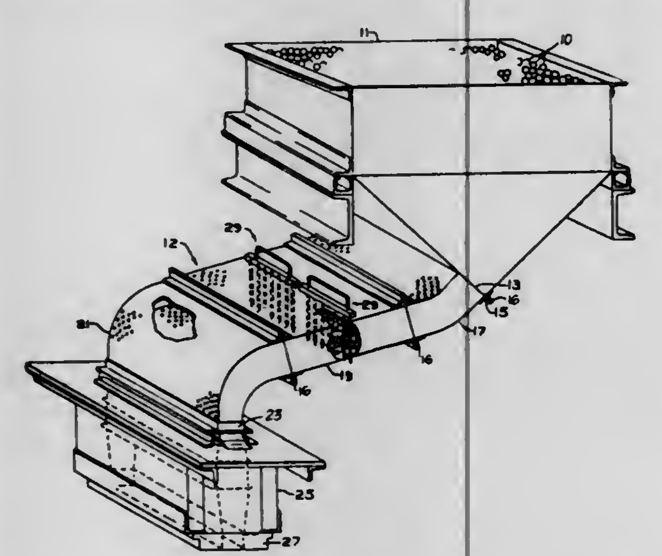

across the width of the pre-melter, the main body of said chute being positioned with respect to said container and said pre-melter to provide an angle from the horizontal sufficient to allow for gravity feed of said glass marbles from said container to said pre-melter but slight enough to prohibit disruption of said pre-melter or said bushing from the weight of the marbles contained in the chute.

4,063,916

PROCESS OF MAKING GLASS BEADS FROM LIQUID MEDIUM FEEDSTOCK

Daniel De Vos, Jette; Paul-Marie Michel, Jumet, and Alfred Berger, Jamioulx, all of Belgium, assignors to Sovitec S.A., Charleroy, Belgium

Filed Nov. 1, 1976, Ser. No. 737,344

Claims priority, application United Kingdom, Nov. 13, 1975, 46919/75

Int. Cl.^{2} **C03B** *19/10*

U.S. Cl. 65—21 **19 Claims**

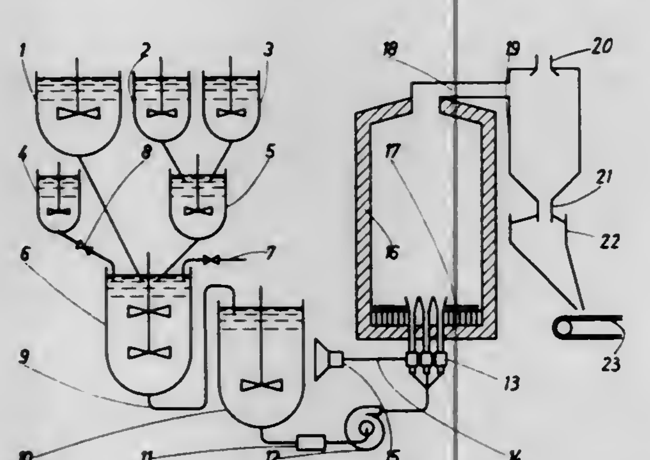

1. A process of making glass beads which comprises the steps of forming a fluid medium comprising an aqueous liquid having glass-forming material therein at least most of which is dissolved in the aqueous liquid, forming drops of such fluid medium, and directly converting the drops to glass beads by causing the drops to travel in separated condition first through a firing zone at glass-forming temperature to cause evaporation of liquid and formation of glass from the glass-forming material while still within said firing zone, and then through a cooling zone to cause the glass to solidify.

4,063,917

GLASS AND MIRROR MAKING PROCESS

Earl L. Hamm, 2234 Smyrna Road Northwest, Conyers, Ga. 30207

Filed Jan. 5, 1977, Ser. No. 757,092

Int. Cl.^{2} **C03C** *1/00*

U.S. Cl. 65—30 R **2 Claims**

1. A method for making a glass article by heating ammonium hydroxide, acetaldehyde, potassium nitrate and water glass in solution form, each material being added in equal weights and put into a mold, said mold being made from a material that is not glass or of a metal that does not alloy with silver, heating the contents of the mold to a temperature ranging from 195.8° centigrade to 300° centigrade for a time sufficient to expell the hydrogen and the acetaldehyde in a reservoir.

4,063,918

APPARATUS FOR FORMING GLASSWARE WITH ARC MOVEMENTS BETWEEN MOLDS

Anthony T. Zappia, Carmel, Ind., assignor to Ball Packaging Products, Inc., Muncie, Ind.

Filed Aug. 30, 1976, Ser. No. 718,405

Int. Cl.^{2} **C03B** *9/00*

U.S. Cl. 65—229 **11 Claims**

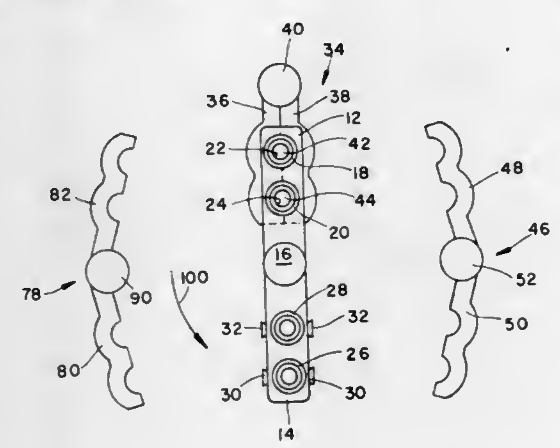

1. Glassware forming apparatus comprising a first arm for supporting at least one neck ring, a second arm for supporting at least one blow head, means for supporting the first and second arms for separate pivotal movement about a common vertical axis, a parison mold and two blow molds, each blow mold being divided into two mold portions, the portions being joined at a hinge, each hinge having an axis which extends generally parallel to the axis of the support means, means for opening and closing the molds, and means for pivoting the first and second arms to convey alternately formed glassware blanks supported by the neck ring from the parison mold to the first blow mold and from the parison mold to the second blow mold and to move the blow head first to the first blow mold to blow the glassware blanks supported therein into glassware and then to the second blow mold to blow the glassware blanks supported therein into glassware.

11. Glassware forming apparatus comprising a first arm for supporting at least one neck ring, means for supporting the first arm for projection along a vertical axis and for pivotal horizontal movement about the axis, a parison mold and two blow molds, means for opening and closing the molds, means for pivoting the first arm first in one direction and then in the opposite direction, and means for projecting the first arm along said axis, the pivoting and projecting means cooperating to convey a first glassware blank formed in the parison mold and supported by the neck ring to a first blow mold, then to return to the parison mold, then to convey a second glassware blank formed in the parison mold and supported by the neck ring to the second blow mold, then to return to the parison mold.

4,063,919

FERTILIZER RODS

Joseph Grano, Jr., Ludlow, Mass., assignor to Monsanto Company, St. Louis, Mo.

Filed June 17, 1976, Ser. No. 697,167

Int. Cl.^{2} **C05F** *11/00*

U.S. Cl. 71—11 **16 Claims**

1. A fertilizer rod composition comprising:

A. about 100 parts by weight of a water soluble polyvinyl alcohol polymer,

B. about 0 to 20 parts by weight of a plasticizer for said polyvinyl alcohol, and

C. about 10 to 350 parts by weight of a fertilizer, said composition being an uniform blend of (A), (B) and (C), or (A) and (C) when (B) is 0 bonded in the form of a rod by (A) as a matrix phase, said rod being water soluble.

4,063,920

REDUCING SETTLING RATE OF POST-PRECIPITATE IN FERTILIZER SOLUTION BY CHLORIDE ADDITION

Charles W. Weston, Yazoo City, Miss., assignor to Mississippi Chemical Corporation, Yazoo City, Miss.

Filed Sept. 20, 1976, Ser. No. 724,579

Int. Cl.^{2} **C05B** *7/00*

U.S. Cl. 71—34 **15 Claims**

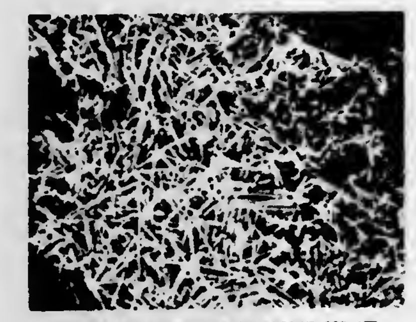

POST-PRECIPITATE FROM AMMONIUM POLYPHOSPHATE LIQUID FERTILIZER TREATED WITH 2.5% (wt) KCl (1000X)

1. A method of impeding the formation and the settling of precipitate crystals in liquid ammonium polyphosphate containing fertilizer solutions prepared by concentrating and ammoniating wet process phosphoric acid which comprises adding within 120 hours of completing the preparation of said ammonium polyphosphate containing solution a quantity of chloride ions to the liquid fertilizer solution in amounts sufficient to alter the morphology of the precipitate crystals such that the length to width ratio of the crystals formed is increased by at least 200% as compared to the ratio for crystals formed in the absence of Cl^- addition.

4,063,921

METHOD FOR THE CULTIVATION OF PLANTS EMPLOYING α-CYANO-α-HYDROXYIMINO-ACETAMIDE DERIVATIVES

Adolf Hubele, Magden, and Manfred Kühne, Pfeffingen, both of Switzerland, assignors to Ciba-Geigy Corporation, Ardsley, N.Y.

Continuation-in-part of Ser. No. 404,548, Oct. 9, 1973, abandoned. This application Aug. 26, 1976, Ser. No. 718,446

Int. Cl.^{2} **A01N** *9/20*

U.S. Cl. 71—76 **5 Claims**

1. A method for the cultivation of plants wherein the growth or development of the plants is inhibited, which method comprises applying to the plant or plants under cultivation an effective amount of a compound of the formula I

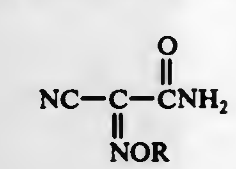

wherein R represents hydrogen or a sodium, potassium or calcium ion.

4,063,922

N-(2-HYDROXYALKYL) DERIVATIVES OF N-PHOSPHONOMETHYLGLYCINE FOR TREATMENT OF SUGARCANE

Van R. Gaertner, Ballwin, and Philip C. Hamm, Glendale, both of Mo., assignors to Monsanto Company, St. Louis, Mo.

Filed Aug. 13, 1976, Ser. No. 714,053

Int. Cl.^{2} **A01N** *9/36*

U.S. Cl. 71—86 **11 Claims**

1. A method for increasing the sucrose content of sugarcane plants which comprises applying to said plants, from about 2 to 10 weeks prior to harvest, an effective sucrose increasing amount of a compound of the formula

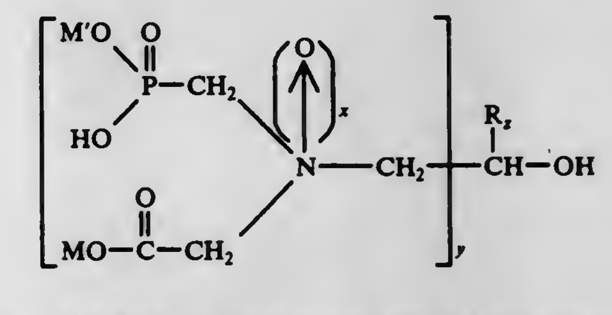

wherein x is selected from zero and one, y is selected from one and two, z is selected from zero and one, the sum of $y+z$ is two, R is selected from hydrogen, methyl, ethyl, hydroxymethyl and lower alkoxymethyl, M is selected from hydrogen, lower alkyl and alkali metal, and M′ is selected from hydrogen, lower alkyl, phenyl and alkali metal.

4,063,923

CARBAMOYLPHOSPHONIC ACID BRUSH CONTROL AGENTS

Jerry C-Y Han, Wilmington, Del., assignor to E. I. Du Pont de Nemours and Company, Wilmington, Del.

Continuation of Ser. No. 381,621, July 23, 1973, abandoned. This application Mar. 18, 1976, Ser. No. 667,955

Int. Cl.^{2} **A01N** *9/36;* **C07F** *9/38, 3/06, 13/01*

U.S. Cl. 71—86 **9 Claims**

1. A compound of the formula

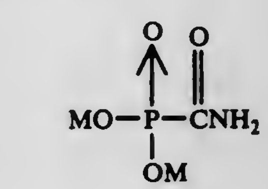

wherein

M is hydrogen, sodium, lithium, potassium, calcium, magnesium, zinc, manganese, barium or

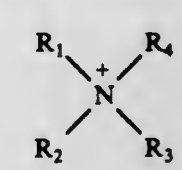

R_1 is hydrogen, alkyl of 1 to 4 carbon atoms or hydroxyalkyl of 2 to 4 carbon atoms;

R_2 is hydrogen, alkyl of 1 to 4 carbon atoms or hydroxyalkyl of 2 to 4 carbon atoms;

R_3 is hydrogen, alkyl of 1 to 4 carbon atoms or hydroxyalkyl of 2 to 4 carbon atoms; and

R_4 is hydrogen or alkyl of 1 to 12 carbon atoms;

provided that both M's are not hydrogen and that the total number of carbon atoms in R_1, R_2, R_3 and R_4 is less than 16.

4,063,924

NEW THIADIAZOLYLIMIDAZOLIDINONE ESTER

John Krenzer, Oak Park, Ill., assignor to Velsicol Chemical Corporation, Chicago, Ill.

Filed Oct. 29, 1976, Ser. No. 736,912

The portion of the term of this patent subsequent to Dec. 14, 1993, has been disclaimed.

Int. Cl.² C07D *285/12;* **A01N** *9/12*

U.S. Cl. 71—90 **2 Claims**

1. The compound 1-(5-t-butyl-1,3,4-thiadiazol-2-yl)-3,4-dimethyl-5-acetyloxy-1,3-imidazolidin-2-one.

2. A method of controlling weeds which comprises contacting said weeds with a herbicidal composition comprising an inert carrier and, as an essential active ingredient, in a quantity toxic to weeds, the compound of claim 1.

4,063,925

HERBICIDAL COMPOSITIONS

Takuo Konotsune, Tokyo, and Katsuhiko Kawakubo, Yasumachi, both of Japan, assignors to Sankyo Company Limited, Tokyo, Japan

Filed Mar. 17, 1975, Ser. No. 558,682

Claims priority, application Japan, Mar. 28, 1974, 49-34939

Int. Cl.² A01N *9/22;* **C07D** *231/20*

U.S. Cl. 71—92 **17 Claims**

1. A method for the destruction of undesirable weeds which comprises applying to said weeds a herbicidally effective amount of a compound having the formula

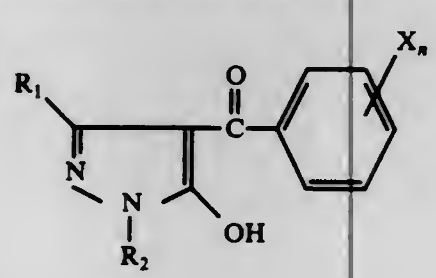

wherein

R_1 is a hydrogen atom or an alkyl group of 1–6 carbon atoms,

R_2 is an alkyl group of 1–6 carbon atoms or an alkenyl group of 3–6 carbon atoms,

X is a halogen atom, nitro group, an alkyl group of 1–4 carbon atoms, a halogenated alkyl group of 1–2 carbon atoms and having 1–3 halogen atoms, an alkoxy group of 1–4 carbon atoms, an alkanesulfonyl group of 1–4 carbon atoms, cyano group, an alkylthio group of 1–4 carbon atoms, an alkanoyl group of 2–5 carbon atoms or a straight or branched lower alkanoyl group of 2–5 carbon atoms and

n is an integer of 1–4 and when *n* is 2, 3, or 4,

X's may be same or different.

10. A herbicidal composition which comprises as an active ingredient 1,3-dimethyl-4-(2,4-dichlorobenzoyl-5-hydroxypyrazole and an agriculturally acceptable carrier.

4,063,926

HERBICIDAL METHODS AND COMPOSITIONS USING 3,5-DICHLORO-2,6-DIFLUORO-4-HYDROXYPYRIDINE OR SALTS THEREOF

Clive Dudley Spencer Tomlin, Maidenhead; John Walter Slater, March, and David Hartley, Bishop's Stortford, all of England, assignors to Imperial Chemical Industries Limited, London, England

Continuation of Ser. No. 761,850, Sept. 23, 1968, abandoned, which is a continuation-in-part of Ser. No. 571,701, Aug. 11, 1966, abandoned. This application June 1, 1972, Ser. No. 258,627

Claims priority, application United Kingdom, Aug. 19, 1965, 35596/65

Int. Cl.² A01N *9/22*

U.S. Cl. 71—94 **2 Claims**

1. A method of combating unwanted vegetation which comprises applying to the locus of the unwanted vegetation or of seeds thereof a herbicidally effective amount of a fluoropyridine compound of the formula:

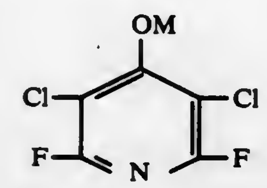

wherein M is selected from the group consisting of hydrogen, alkali metals, alkaline earth metals and ammonium ion.

4,063,927

DISULFOXIDE ABSCISSION AGENTS

Geneva Gail Otten, and Tom Conrad Rheinecker, both of Cincinnati, Ohio, assignors to The Procter & Gamble Company, Cincinnati, Ohio

Filed Aug. 7, 1975, Ser. No. 602,626

Int. Cl.² A01N *9/22*

U.S. Cl. 71—94 **6 Claims**

1. A method of inducing fruit abscission by application to a fruit bearing plant of an effective amount of a disulfoxide abscission agent of the formula

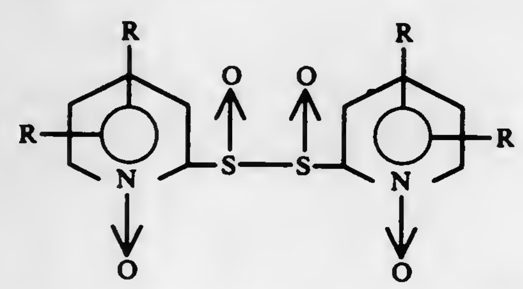

wherein each R is independently selected from the group consisting of hydrogen, hydroxyl, halogen and lower alkyl containing from 1 to about 10 carbon atoms.

4,063,928

COMPOSITION AND METHOD OF CONTROLLING UNDESIRED PLANT GROWTH WITH SUBSTITUTED PYRIDINYLOXY(THIO)PHENYL -ACETAMIDES, -UREAS AND UREA DERIVATIVES

Howard Johnston, Walnut Creek, Calif., assignor to The Dow Chemical Company, Midland, Mich.

Division of Ser. No. 435,615, Jan. 22, 1974, Pat. No. 3,931,201. This application Oct. 16, 1975, Ser. No. 623,177

Int. Cl.² A01N *9/22*

U.S. Cl. 71—94 **9 Claims**

1. A composition comprising a herbicidally effective amount of a compound corresponding to the formula

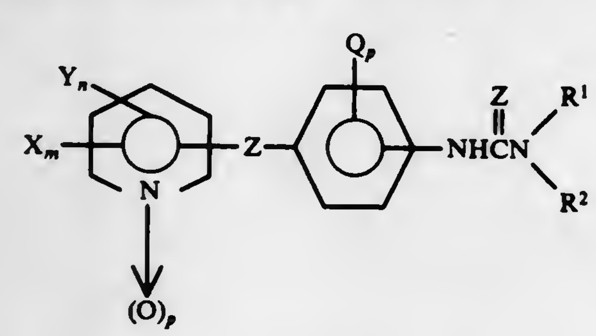

each p independently represents an integer of 0 or 1;

each X independently represents bromo, chloro, iodo or fluoro;

m represents an integer of 0 to 4, inclusive;

each Y independently represents nitro, ZR^3,

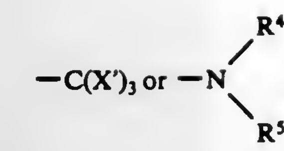

n represents 1 or 2;

each Z independently represents oxygen or sulfur;

Q represents methyl, ethyl, halo, nitro or trifluoromethyl;

each X' independently represents hydrogen or halo;

R^1 represents hydrogen, alkyl of from 1 to 4 carbon atoms or alkoxy of from 1 to 4 carbon atoms;

R^2 represents alkyl of from 1 to 3 carbons or

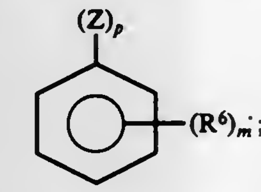

R^3 represents alkyl of from 1 to 3 carbon atoms;

R^4 and R^5 each independently represent hydrogen or alkyl of from 1 to 4 carbon atoms; and

each R^6 represents halo or alkyl of from 1 to 3 carbon atoms.

4,063,929

HERBICIDAL 4-TRIFLUOROMETHYL-4'NITRODIPHENYL ETHERS

Horst O. Bayer, Levittown; Colin Swithenbank, Perkasie, and Roy Y. Yih, Doylestown, all of Pa., assignors to Rohm and Haas Company, Philadelphia, Pa.

Continuation-in-part of Ser. No. 331,719, Feb. 12, 1973, Pat. No. 3,928,416, which is a continuation-in-part of Ser. No. 234,651, March 14, 1972, Pat. No. 3,798,276. This application Sept. 29, 1975, Ser. No. 617,560

The portion of the term of this patent subsequent to Dec. 23, 1992, has been disclaimed.

Int. Cl.² C07C *65/14;* **A01N** *9/24*

U.S. Cl. 71—115 **7 Claims**

1. An agronomically-acceptable salt of a compound of the formula

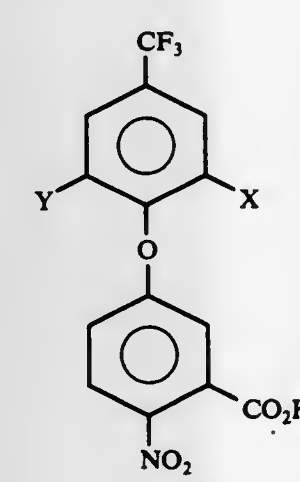

wherein

X is a halogen atom, and

Y is a hydrogen atom or a halogen atom.

2. A herbicidal composition comprising a salt according to claim 1 and an agronomically acceptable carrier.

4. A method of controlling weeds which comprises applying to the surface of the growth medium prior to the emergence of the weeds from the growth medium a salt according to claim 1 in an amount sufficient to control the growth of the weeds.

4,063,930

PREPARATION OF WEATHERABLE FERRITE AGGLOMERATE

Robert Ernest Kusner, Brecksville, and Robert William Muthig, Northfield, both of Ohio, assignors to Republic Steel Corporation, Cleveland, Ohio

Continuation of Ser. No. 526,268, Nov. 22, 1974, abandoned. This application July 1, 1976, Ser. No. 701,956

Int. Cl.² C22B *1/08;* **C21B** *3/04;* **C22B** *9/10*

U.S. Cl. 75—3 **20 Claims**

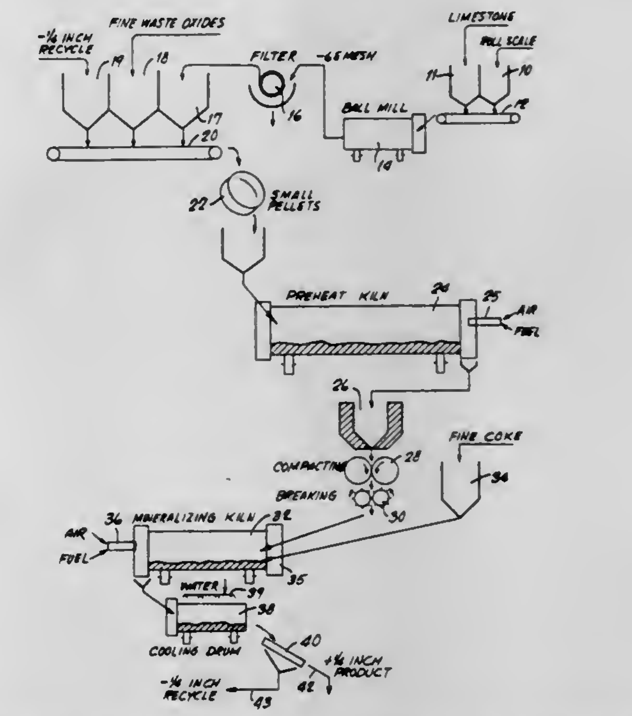

1. Lime-iron oxide agglomerate consisting of weatherable, hard, non-fused and non-sintered bodies each having a mean diameter of at least about ¼ inch, each being a strongly coherent body consisting essentially of iron values and lime, said lime being substantially all present in the form of dicalcium ferrite constituting a coherent structure throughout the body and produced by heating coherent intermixed fine particles of lime and iron oxide at a temperature of about 1650° F to about 2000° F in reducing environment, said bodies being thereby produced, to comprise said dicalcium ferrite, by heating only at temperatures substantially below sintering temperature, said lime being about 15 to 40% of the bodies and said iron values being present at least in sufficient amount to constitute the iron content of said dicalcium ferrite.

4,063,931

PROTECTION OF CARBON ELECTRODES

Josef Schiffarth; Clive Graham Lorkin, and Kenneth John Fletcher, all of Borken, Germany, assignors to Foseco International Limited, Birmingham, England

Continuation of Ser. No. 569,758, April 21, 1975, abandoned, which is a continuation of Ser. No. 343,217, March 21, 1973, abandoned. This application Oct. 12, 1976, Ser. No. 731,842

Claims priority, application United Kingdom, Mar. 22, 1972, 13390/72; July 26, 1972, 34986/72

Int. Cl.² C22D *7/00*

U.S. Cl. 75—10 R **13 Claims**

1. In a process for melting metal in a carbon electrode electric arc furnace by applying electric current to the electrodes to generate an arc and thereby melting metal contained in the furnace the improvement which comprises fusing pre-formed sheet material to the sides of at least one electrode of the fur-

nace, said material containing a graphite-wetting material which forms a coherent coating over the electrode, by virtue

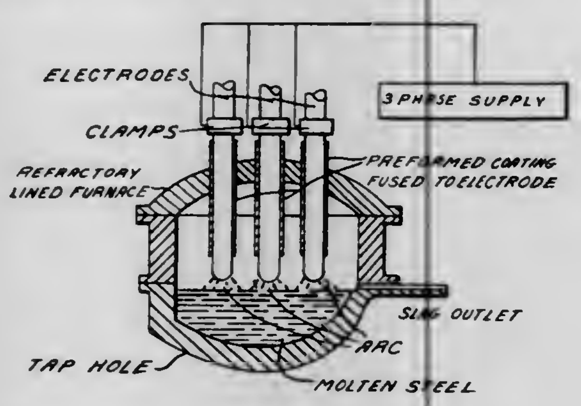

of said fusing and melting metal in the furnace by applying electric current to the electrodes to generate an arc.

4,063,932
METHOD FOR ADMIXING SOLIDS IN MOLTEN METAL
James H. Downing, Clarence; Robert H. Kaiser, Youngstown; William L. Murphy, Lockport, all of N.Y., and William R. Vaughn, Russellville, Ala., assignors to Union Carbide Corporation, New York, N.Y.
Continuation of Ser. No. 489,164, July 17, 1974, abandoned. This application June 7, 1976, Ser. No. 693,557
Int. Cl.[2] C21C *7/00;* **C22B** *9/02*
U.S. Cl. 75—61 **3 Claims**

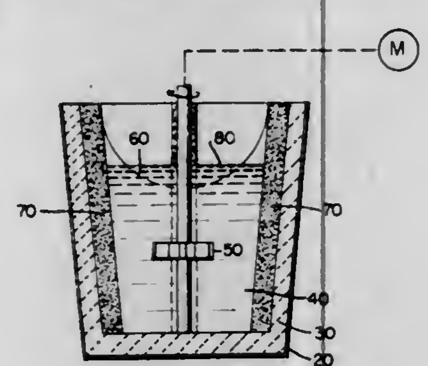

1. A method for stirring molten metal having its upper surface exposed to air and having at least one constituent which is oxidizable upon exposure to air at the temperature of the molten metal, said method comprising imparting rotational motion to said molten metal in a vessel of substantially circular cross-section by means of a stirring member immersed in said molten metal substantially at the vertical axis of said vessel, and providing at least two baffle members arranged symmetrically about the vertical axis of said vessel, each said baffle member being adjacent the inner sidewall of said vessel and extending radially inward therefrom, and each said baffle member extending from at least the surface of said molten metal to at least 70% of the depth of said molten metal, said baffle members preventing the development of a surface vortex in said molten metal and maintaining the surface of said molten metal substantially horizontal to minimize the exposure to air of said at least one oxidizable constituent.

4,063,933
PROCESS FOR THE TREATMENT OF COMPLEX LEAD-ZINC CONCENTRATES
Ernest Peters, Vancouver, Canada, assignor to Texasgulf Canada Ltd., Toronto, Canada
Filed Dec. 1, 1976, Ser. No. 746,345
Claims priority, application Canada, July 2, 1976, 256145
Int. Cl.[2] C22B *13/04*
U.S. Cl. 75—101 R **14 Claims**

1. A process for treating sulfide concentrates containing lead, copper, zinc and silver to selectively recover said metals therefrom, comprising the steps of:

a. contacting said concentrate with sulfuric acid in the presence of oxygen at elevated temperature and pressure to extract copper and zinc materials from said concentrate;
b. thereafter contacting said concentrate with lime to remove elemental sulfur therefrom; and

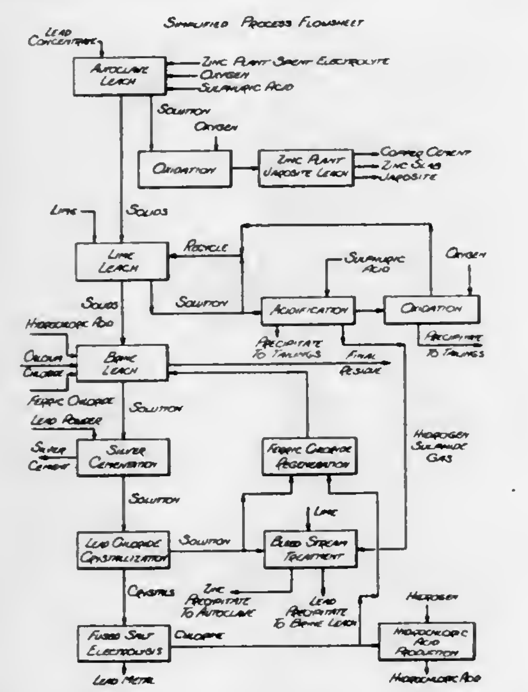

c. thereafter by contacting said concentrate with a mixture of calcium chloride and ferric chloride to extract lead and silver materials therefrom.

4,063,934
HEAT RESISTING NICKEL-CHROMIUM ALLOY HAVING HIGH RESISTANCE TO OXIDATION, CARBURIZATION AND CREEP AT HIGH TEMPERATURES
Jacques Thuillier, Pont de l'Arche, and Michel Hugo, Custines, both of France, assignors to Acieries du Manoir Pompey, Neuilly-sur-Seine, France
Filed Feb. 24, 1976, Ser. No. 660,861
Claims priority, application France, Dec. 2, 1975, 75.36877
Int. Cl.[2] C22C *30/00, 19/05*
U.S. Cl. 75—122 **15 Claims**

1. Heat resisting alloy having a high resistance to oxidation, carburization and creep at very high temperatures and consisting essentially of the following elements in the following by-weight proportion ranges:

Ni	24 – 53	%
Cr	20 – 44	%
C	0.01 – 0.6	%
Mn	0.1 – 1.5	%
Si	1.3 – 3	%
Nb	0.5 – 3	%
N	0.05 – 0.2	%
(W + Mo)	0.2 – 5	%
Fe	0 – 47	%
Cu	0.1 – 5	%

the Ni/Cr by-weight ratio being between 1.20 and 1.40.

4,063,935
OXIDATION-RESISTING AUSTENITIC STAINLESS STEEL
Tokio Fujioka; Masayuki Kinugasa; Shozo Iizumi; Shizuhiro Teshima, and Isamu Shimizu, all of Shin-Nanyo, Japan, assignors to Nisshin Steel Co., Ltd., Japan
Continuation-in-part of Ser. No. 529,766, Dec. 4, 1974, abandoned. This application Apr. 23, 1976, Ser. No. 679,601
Claims priority, application Japan, Dec. 22, 1973, 48-142976; Dec. 22, 1973, 48-142977
The portion of the term of this patent subsequent to Nov. 2, 1993, has been disclaimed.
Int. Cl.[2] C22C *38/34, 38/40*
U.S. Cl. 75—128 C **3 Claims**

1. An oxidation-resisting austenitic stainless steel consisting essentially of not more than 0.15% by weight of C, 2.56 – 4.0% by weight of Si, not more than 2.0% by weight of Mn, 8 – 22% by weight of Ni, 16 – 25% by weight of Cr, 0.001 – 0.05% by weight of at least one alkaline earth metal, and balance Fe.

4,063,936
ALUMINUM ALLOY HAVING HIGH MECHANICAL STRENGTH AND ELONGATION AND RESISTANT TO STRESS CORROSION CRACK
Ikuo Nagase, Tokyo, Japan, and Park Hee Sun, Seoul, South Korea, assignors to Alloy Trading Co., Ltd., Tokyo, Japan
Continuation of Ser. No. 538,117, Jan. 2, 1975, abandoned. This application Aug. 26, 1976, Ser. No. 717,868
Claims priority, application Japan, Jan. 14, 1974, 49-7383
Int. Cl.[2] C22C *21/10*
U.S. Cl. 75—141 **3 Claims**

1. An aluminum alloy having a high mechanical strength and elongation and resistant to stress corrosion cracking, consisting essentially of about 10% by weight of Zn, about 1% by weight of Mg, 0.1 to 1.0% by weight of Zr, 0.1 to 1.0% by weight of an alloying metal selected from the group consisting of Cu and Ag, balance essentially Al.

4,063,937
PALLADIUM-BASED ALLOY
Viktor Alexeevich Goltsov, ulitsa Karpinskogo, 25, kv. 257, Donetsk; Nikolai Ivanovich Timofeev, prospekt Lenina, 62, korpus 5, kv. 17, and Sergei Grigorievich Guschin, ulitsa Sheinkmana, 45, kv. 148, both of Sverdlovsk, all of U.S.S.R.
Filed Dec. 27, 1976, Ser. No. 754,434
Int. Cl.[2] C22C *5/00*
U.S. Cl. 75—172 G **1 Claim**

1. Palladium-based alloy consisting of 42.0–96.85% by weight of palladium 2–40% by weight of silver, 1–12% by weight of indium, 0.05–2% by weight of yttrium, 0.1–4% by weight of at least one element selected from the group including niobium, molybdenum, tantalum, tungsten.

4,063,938
METHOD FOR PRODUCING A NITRIDE BASED HARD METAL POWDER
Gerd Weissman, Friedrich-Eckart-Strasse 21, 8000 Munich 81, Germany
Filed Mar. 27, 1975, Ser. No. 562,541
Claims priority, application Germany, Mar. 30, 1974, 2415553
Int. Cl.[2] B22F *1/00*
U.S. Cl. 75—205 **18 Claims**

1. A method for nitriding refractory metals for the production of low oxygen nitride based hard metal alloys comprising the steps of admixing (A) a finely divided metal selected from the group consisting of the VI group of the periodic table of elements, (B) a finely divided refractory metal selected from the group consisting of metals of the IV or V groups of the periodic table of elements or mixtures thereof and (C) a finely divided auxiliary metal selected from the group consisting of the iron metals, and reacting said mixture with a gas containing nitrogen at a temperature and time sufficient to nitride said mixture.

4,063,939
COMPOSITE TURBINE WHEEL AND PROCESS FOR MAKING SAME
Don M. Weaver, Birmingham, and Steven H. Reichman, Ann Arbor, both of Mich., assignors to Special Metals Corporation, New Hartford, N.Y.
Filed June 27, 1975, Ser. No. 590,797
Int. Cl.[2] B22F *3/12, 3/14, 5/04*
U.S. Cl. 75—208 R **15 Claims**

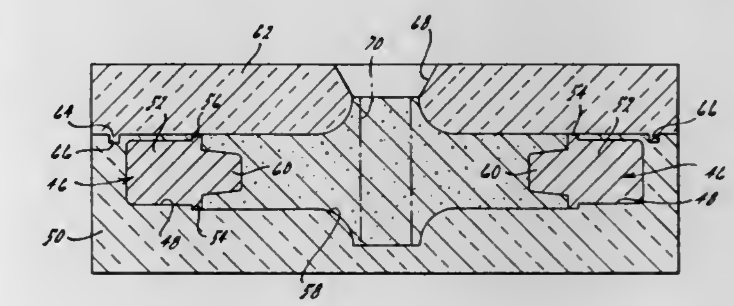

1. A process for making a composite turbine wheel or the like comprising a plurality of blades connected to the periphery of a hub which comprises the steps of forming a plurality of blade elements composed of a high temperature strength and fatigue resistant material including a blade section having an integrally-connected root section extending axially of the base of said blade section, finishing said blade elements to accurate final dimensions, positioning said blade elements in a mold in radially-oriented accurately-spaced circumferential relationship with said root sections thereof extending inwardly of a mold cavity defining the profile of the hub of said turbine wheel, filling said mold cavity with a superalloy metal powder of a particle size less than about 100 mesh and an oxygen content of less than about 200 ppm in a manner to achieve a loose powder packing density of at least about 60 percent of theoretical 100 percent density and effecting an embedment of said root sections in said metal powder, heating said mold and the assembled said blade elements and said metal powder in vacuum to an elevated temperature to effect a sintering of said metal powder into a coherent mass and a bonding thereof to said root sections, continuing said heating and sintering until the sintered said powder attains a density of at least about 90 of 100 percent theoretical density and to form a metallurgical diffusion bond between said root sections and the sintered said metal powder forming an integral assembly, and thereafter hot isostatically pressing said integral assembly at an elevated temperature under sufficient pressure for a period of time to effect a further densification of the sintered said powder defining the hub to a density approaching 100 percent of theoretical density.

4,063,940
MAKING OF ARTICLES FROM METALLIC POWDER
Richard James Dain, Hurst Wood Farm, Crouch, near Borough Green, Kent, and Hugh Ford, 18 Shrewsbury House, Cheyne Walk, London S.W.E., both of England
Continuation-in-part of Ser. No. 578,787, May 19, 1975, abandoned. This application June 1, 1976, Ser. No. 691,697
Int. Cl.[2] B22F *1/00*
U.S. Cl. 75—213 **17 Claims**

1. A method of making a dense metal alloy product comprising the steps of:

a. making powder by atomization of a melt of metal alloy;
b. heating the powder in a sub-atomspheric pressure and cooling the powder at a controlled rate initially to deoxidize it and anneal it;
c. compacting alloy powder and thereby forming a compact with a relatively density of at least 65%;

d. heating said compact at a sub-atmospheric pressure but below the solidus temperature for at least half an hour in order to further reduce the oxygen content of the compact; and

e. raising the temperature to a selected sinter temperature which is at least the solidus temperature of the alloy while maintaining a sub-atmospheric pressure and maintaining the temperature within ± 10° C of the selected temperature for at least half an hour to sinter the compact and cause densification of the compact of at least 98% relative density.

4,063,941

METHOD FOR LOADING AND UNLOADING AN ISOSTATIC PRESS FOR COMPRESSION OF PRE-FORMED POWDER OBJECTS

Eduard L. J. Papen, Belsele, Belgium, assignor to National Forge Company, Irvine, Pa.

Filed Dec. 6, 1976, Ser. No. 747,897

Int. Cl.² B22F *1/00;* **B29D** *3/00*

U.S. Cl. 75—226 **6 Claims**

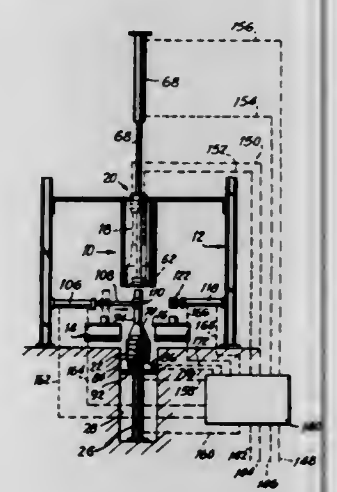

1. In a method for compacting pre-formed objects made of powdered material in an isostatic press having a fluid pressure chamber, a generally cylindrical container within said chamber for receiving an object inserted along the cylindrical axis of said container, said fluid pressure chamber and said container being closed at one end by first closure means including a first plug extending into said container adapted when the press is in unpressurized condition to be moved axially through said container to and beyond the opposite end thereof, second closure means for closing the opposite end of said fluid pressure chamber and said container including a second plug extending inwardly of said container, and said second closure means being removable by axial movement away from said container when the press is in unpressurized position to open said opposite end of said container and to position said second plug in axial alignment with and spaced from said container, the improvement which comprises the steps of opening said opposite end of said container by moving said closure means axially of and away from said container, placing a pre-formed object in a position outside said opposite opened end of said container aligned with the axis of said container and with one surface of said pre-formed object in engagement with the removed second plug, moving said first plug axially beyond said opposite opened end of said container to engage and press against a surface of said pre-formed object opposed to said one surface thus to hold said pre-formed object between said first and second plugs by pressure exerted in a direction which is axial of said container, moving both said plugs with said pre-formed object held therebetween axially of and into said container to position said pre-formed object therein for isostatic compression, pressurizing said press to compress and convert said pre-formed object in said container into a compact, depressurizing said press, opening said opposite end of said container by moving said second closure means away from said container while simultaneously moving said first plug axially through said container to maintain said compact held between said first and second plugs, continuing movement of said first and second plugs, with said compact held therebetween to a position outside of and axially aligned with said container, retracting said first plug axially of said container to release engagement of said first plug with said compact, and removing said compact from said press.

4,063,942

METAL FLAKE PRODUCT SUITED FOR THE PRODUCTION OF METAL POWDER FOR POWDER METALLURGICAL PURPOSES, AND A PROCESS FOR MANUFACTURING THE PRODUCT

Bengt G. S. Lundgren, Ulricehamn, Sweden, assignor to SKF Nova AB, Goteborg, Sweden

Continuation-in-part of Ser. No. 634,318, Nov. 24, 1975, abandoned. This application May 17, 1976, Ser. No. 686,938

Claims priority, application Sweden, Nov. 26, 1974, 7414810

Int. Cl.² B22D *23/08*

U.S. Cl. 75—251 **12 Claims**

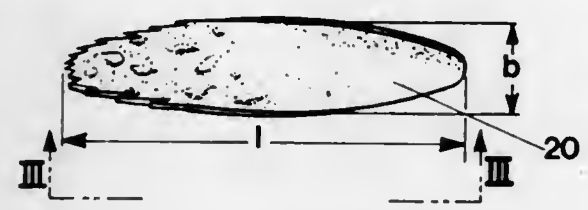

1. A steel flake product suited for the production of steel powder for powder metallurgical purposes, characterized in that it consists of a plurality of thin, brittle and easily crushed, substantially dendrite-free steel flakes of amorphous to compact-grained structure.

4,063,943

ELECTROSTATOGRAPHIC IMAGING METHOD

Donald C. Von Hoene, Fairport, and John M. Magde, Williamson, both of N.Y., assignors to Xerox Corporation, Stamford, Conn.

Filed Aug. 23, 1976, Ser. No. 716,742

Int. Cl.² G03G *13/22, 13/24*

U.S. Cl. 96—1 R **10 Claims**

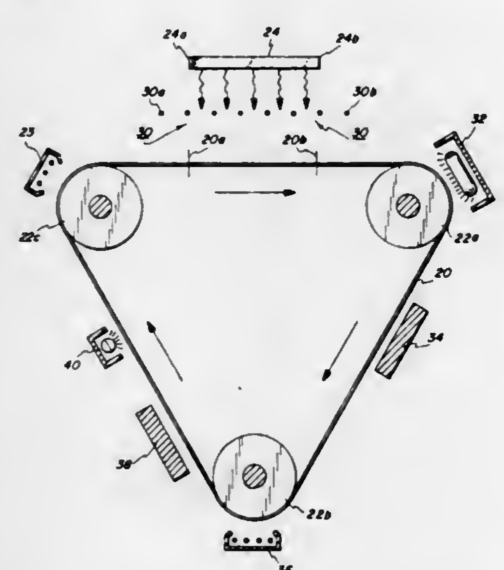

1. A method of forming a latent electrostatic image on a segment of an electrostatographic photosensitive device comprising a grounded conductive substrate having on its surface and in injecting contact therewith a layer of photoconductive material which is in turn overcoated with a layer of an electrically insulating organic resin, which method comprises:

a. applying an initial electrostatic charge of polarity opposite to that of the majority carrier of the photoconductive material to the surface of the photosensitive device to provide an initial potential which is solely across the insulating layer;

b. advancing the segment of the photosensitive device toward a corona emitting grid which grid is in operative relationship with the photosensitive device and is wider than the segment of the photosensitive device on which the latent image is to be formed;

c. activating the grid when the trailing edge of the segment reaches the lead edge of the grid to thereby apply an electronic field of either alternating current or direct current of polarity opposite that of the polarity of the initial charge to drive the initial potential to a potential included in the range extending from a potential less than the initial potential through zero to a chosen potential opposite in sign to the polarity of the initial potential;

d. exposing the segment to imagewise activating radiation in the full frame flash exposure mode while continuing to apply the electronic field thereto to begin the formation of electrostatic contrast potentials stored across the insulating layer;

e. continuing the advancement of the segment past the corona emitting grid while continuing the application of the electronic field thereto until the lead edge of the segment reaches the rear edge of the grid and then deactivating the grid to complete the formation of the contrast potentials stored across the layer of photoconductive material in accordance with the lifetimes of photogenerated charge carriers and the ultimate potential to which the segment's surface is to be charged, such potential being included in the range extending from a potential less than the initial potential through zero to a chosen potential opposite in sign to the polarity of the initial potential; and

f. making the electrostatic contrast potentials across the insulating layer available for development by uniformly exposing the segment to activating radiation or allowing the inherent dark decay of the photoconductor or both to remove all imagewise potential distribution in the photoconductive layer.

4,063,944

CUPOLA CHARGE MATERIAL

James A. Behring, Waukesha, Wis., assignor to Grede Foundries, Inc., Milwaukee, Wis.

Continuation-in-part of Ser. No. 609,285, Sept. 2, 1975, abandoned. This application Mar. 14, 1977, Ser. No. 777,434

Int. Cl.² B21C *37/00*

U.S. Cl. 75—256 **6 Claims**

1. A cupola charge material, comprising a bonded block composed of 15% to 35% by weight of coke breeze, 8% to 20% by weight of cement, 0% to 25% of iron oxide, and the balance being ferrous metal scrap.

4,063,945

ELECTROSTATOGRAPHIC IMAGING METHOD

Donald C. Von Hoene, Fairport, and Richard L. Post, Penfield, both of N.Y., assignors to Xerox Corporation, Stamford, Conn.

Filed Feb. 17, 1977, Ser. No. 769,492

Int. Cl.² G03G *13/22, 13/24*

U.S. Cl. 96—1 R **10 Claims**

1. A method of forming a latent electrostatic image on a photosensitive device comprising a grounded conductive substrate having on its surface a layer of photoconductive material which is in turn overcoated with a layer of electrically insulating organic resin which method comprises applying an initial electrostatic charge of one polarity to the surface of the photosensitive device to provide an initial potential which is solely across the insulating layer followed by the steps of:

a. applying to the surface of the photosensitive device an electronic field of direct current having a polarity opposite to that of the initial electrostatic charge to drive the initial potential to a potential included in the range extending from a potential less than the initial potential through zero to a chosen potential opposite in sign to the polarity of the initial potential and, either simultaneously or sequentially, exposing the photosensitive device to imagewise activating radiation thereby forming a imagewise potential distribution across the layer of photoconductive material;

b. forming an imagewise potential distribution across the insulating layer by uniformly exposing the device to activating radiation; and

c. applying an electrostatic charge of the same polarity as that of the initial charge to the surface of the photosensitive device to thereby simultaneously erase the electrostatic charge from the device and initially charge it as the first step in the next cycle.

4,063,946

ELECTROPHOTOGRAPHIC COLOR REPRODUCTION PROCESS EMPLOYING PHOTOCONDUCTIVE MATERIAL WITH DUAL LIGHT FATIGUE PROPERTIES

Yasuo Tamai, and Sadao Osawa, both of Tokyo, Japan, assignors to Rank Xerox Ltd., London, England

Filed Jan. 22, 1973, Ser. No. 325,283

Int. Cl.² G03G *13/01, 5/12*

U.S. Cl. 96—1.2 **4 Claims**

1. A xerographic color reproduction process comprising providing a sensitized electrophotographic plate such that the inherent photosensitivity of the unsensitized photoconductor is extended resultng in the sensitized photoconductor having light fatigue properties within the inherent photosensitive range and no light fatigue properties within the extended photosensitive range, charging said photoconductor, selectively illuminating said photoconductor to color images with light having wavelengths both in the inherent and extended photosensitive range of the sensitized photoconductor resulting in an electrostatic charge pattern in the unilluminated areas, developing said electrostatic charge pattern with a toner of one color, recharging said electrophotographic plate to thereby charge the areas illuminated only in said extended range and not developed by said toner, and developing said recharged areas with toner of another color.

4,063,947

PHOTOCONDUCTIVE INSULATING FILMS COMPRISING FLUORENONE-SUBSTITUTED OLIGOMERS

John M. Pochan, Rochester, and Sam R. Turner, Webster, both of N.Y., assignors to Xerox Corporation, Stamford, Conn.

Filed Oct. 29, 1975, Ser. No. 626,957

Int. Cl.² G03G *5/04*

U.S. Cl. 96—1.5 N **6 Claims**

1. A composite photoconductive insulating film comprising a layer of photoconductive materials having substantial spectral response in the visible region of the electromagnetic spectrum and a substantially colorless insulating layer contiguous therewith comprising a polymeric solid containing a minor portion of electronically inert polymeric binder and a major portion of electronically active oligomer of the formula:

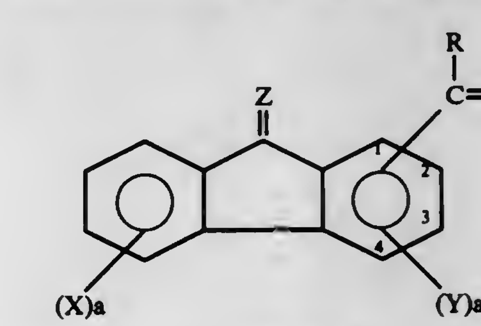

wherein R is

-continued

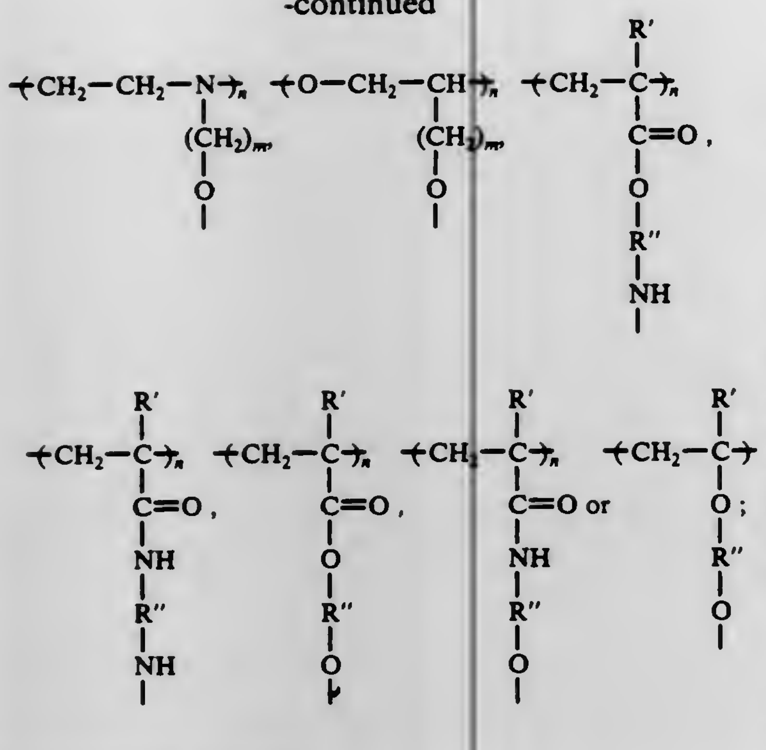

R' is hydrogen or methyl;
R'' is alkyl of 1-10 carbon atoms;
X and Y are independently selected from the group consisting of NO_2, halogen, cyano and $-CF_3$;
Z is oxygen or dicyanomethylene;
a and *a'* can range from 0—4;
m is 1-10; and
n is in the range of from about 3 to about 25.

4,063,948
MATERIAL FOR ELECTROPHOTOGRAPHIC REPRODUCTION
Erwin Lind, Auringen, Germany, assignor to Hoechst Aktiengesellschaft, Germany
Filed June 10, 1976, Ser. No. 694,712
Claims priority, application Germany, June 14, 1975, 2526720
Int. Cl.² G03G *5/06*
U.S. Cl. 96—1.6 **22 Claims**

1. A material for electrophotographic reproduction, which comprises a conductive support having a sensitized photoconductive insulating layer thereon containing at least one organic photoconductor and containing, as a sensitizer, a polymethine dyestuff capable of effecting sensitization in the short wavelength absorption range of the photoconductor within the spectral range of 400 to 550 nm, the sensitizer having the general formula

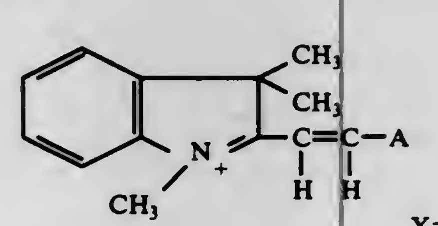

wherein A is an unsubstituted or substituted indolyl group, an unsubstituted or substituted benzthiazolylamino group, an unsubstituted or substituted phenylamino group, or an unsubstituted or substituted indolinyl group, and X^- is a monovalent anion.

4,063,949
PROCESS FOR THE PREPARATION OF PLANOGRAPHIC PRINTING FORMS USING LASER BEAMS
Fritz Uhlig, and Ine Gramm, both of Wiesbaden, Germany, assignors to Hoechst Aktiengesellschaft, Germany
Filed Feb. 22, 1977, Ser. No. 770,788
Claims priority, application Germany, Feb. 23, 1976, 2607207
Int. Cl.² G03F *7/08*
U.S. Cl. 96—27 E **2 Claims**

1. In the process for the preparation of a planographic printing form in which a recording material comprising a support of anodically oxidized aluminum and a recording layer thereon is imagewise irradiated with a laser beam, thereby rendering the irradiated portions of the recording layer oleophilic and/or insoluble, and the non-irradiated portions of the recording layer are then removed, where necessary, by washing with a developer liquid,
the improvement comprising an oxide layer on said support weighing at least 3 grams per square meter.

2. A process according to claim 1 in which said oxide layer weighs from 5 to 12 grams per square meter.

4,063,950
DIR COUPLER THAT FORMS COLORLESS REACTION PRODUCT
Mitsuto Fujiwhara; Takaya Endo; Shoji Kikuchi, and Ryosuke Satoh, all of Hino, Japan, assignors to Konishiroku Photo Industry Co., Ltd., Tokyo, Japan
Filed June 23, 1975, Ser. No. 589,396
Claims priority, application Japan, July 6, 1974, 49-77510
Int. Cl.² G03C *5/30, 7/00, 1/06, 1/48*
U.S. Cl. 96—66.3 **14 Claims**

8. A process for developing an imagewise exposed light-sensitive silver halide photographic material comprising a compound forming a substantially colourless compound and releasing a development inhibitor by reacting with an oxidation product of a colour developing agent and having the following formula:

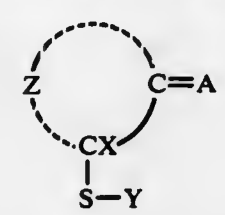

wherein A represents an oxygen atom or a $=NR_1$ radical in which R_1 is a hydroxyl or an amino radical that may be substituted, Z represents a non-metallic atomic group necessary to complete a 5-, 6- or 7-membered alicyclic ring or a heterocyclic ring containing nitrogen, oxygen or sulfur, X represents a halogen atom, -O-W,

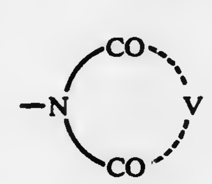

or -S-Y in which W represents an alkyl, aryl, heterocyclic ring, acyl or $-SO_2R_2$ radical wherein R_2 represents an alkyl, aryl or a heterocyclic ring radical, and V represents a non-metallic atomic group necessary to complete a heterocyclic ring containing nitrogen and Y represents a radical that forms a compound having development inhibiting action together with the sulfur atom when the —SY bond of the thioether is split which process comprises developing the exposed material with an alkaline developer containing a colour developing agent.

4,063,951
MANUFACTURE OF TABULAR HABIT SILVER HALIDE CRYSTALS FOR PHOTOGRAPHIC EMULSIONS
Thomas George Bogg, Brentwood, England, assignor to Ciba-Geigy AG, Basel, Switzerland
Filed Dec. 8, 1975, Ser. No. 638,777
Claims priority, application United Kingdom, Dec. 19, 1974, 54868/74
Int. Cl.² G03C *1/02;* **B01J** *13/00*
U.S. Cl. 96—94 R **11 Claims**

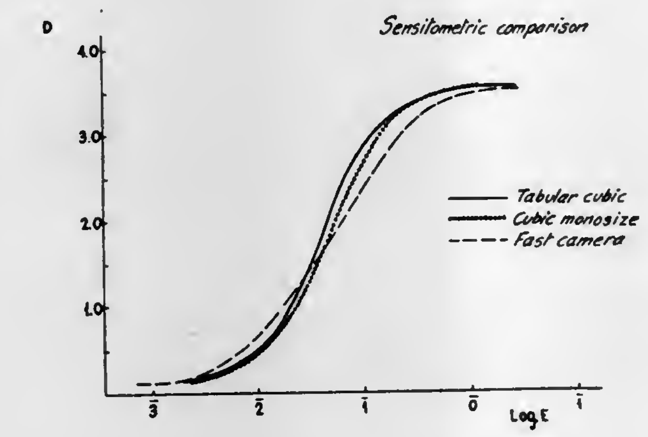

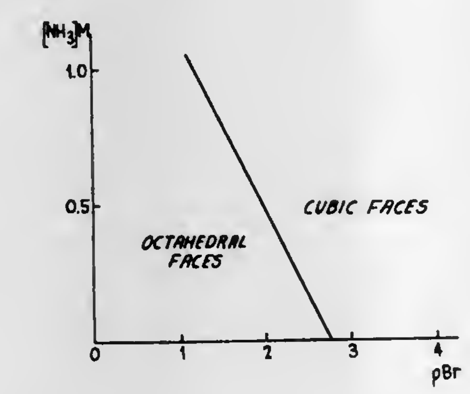

1. A process for the production of a photographic silver halide emulsion wherein the silver halide crystals are of tabular habit bounded by (100) cubic faces and which have an aspect ratio of from 1.5:1 to 7:1 the size of the crystals being from 0.2μ to 3.0μ in edge length, which process comprises adding an aqueous solution of a water-soluble halide and an aqueous solution of silver nitrate to an aqueous colloid medium by a double jetting technique at a controlled constant pAg value of between 5.0 and 7.0 and at a controlled constant temperature within the range of 35° to 75° to produce monodispersed untwinned seed crystals and then allowing the seed crystals to increase in size by Ostwald ripening in the presence of an ammonia concentration between 0.1 and 1 molar and an alkali halide concentration between 0 and 0.1 molar at a temperature of between 30° to 70 C.

4,063,952
PROCESS FOR HARDENING SILVER HALIDE CONTAINING PHOTOGRAPHIC LAYERS WITH SULPHO- OR SULPHOALKYL-SUBSTITUTED CARBAMOYL PYRIDINIUM COMPOUNDS
Wolfgang Himmelmann, Opladen; Johannes Sobek, and Wolfgang Sauerteig, both of Leverkusen, all of Germany, assignors to AGFA-Gevaert Aktiengesellschaft, Leverkusen, Germany
Filed Aug. 12, 1975, Ser. No. 604,010
Claims priority, application Germany, Aug. 17, 1974, 2439551
Int. Cl.² G03C *1/30*
U.S. Cl. 96—111 **9 Claims**

1. A process for providing a photographic material comprising at least one silver halide emulsion associated with at least one supported layer containing protein in which the protein-containing layer is contacted with an effective amount of a hardener to harden the layer
wherein the improvement comprises the hardener is carbamoylpyridinium compound of the formula

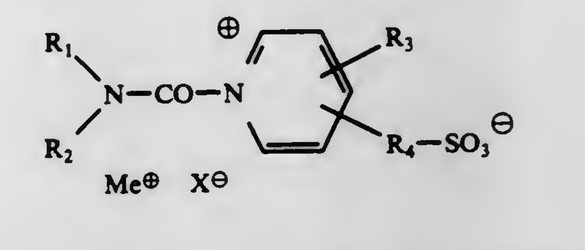

in which
R_1 and R_2 which are the same or different represent an alkyl group containing 1 to 3 carbon atoms, an aryl group which is unsubstituted or substituted which C_1 to C_2 alkyl or with halogen; or an aralkyl group which is unsubstituted or substituted with C_1 to C_2 alkyl or with halogen; or
R_1 and R_2 together represent the groups required to complete a piperidine or morpholine ring which is substituted with C_1 to C_2 alkyl or with halogen,
R_3 represents hydrogen, methyl or ethyl,
R_4 represents ethylene or a single chemical bond,
Me^+ represents an alkali metal cation and
X^- represents Cl or Br^-.

4,063,953
PHOTOSENSITIVE COMPOSITION
Hideo Fukutani, Tokyo; Konoe Miura; Yoshihiro Takahashi, both of Yokohama, and Kazuo Torige, Kanagawa, all of Japan, assignors to Mitsubishi Chemical Industries, Ltd., Tokyo, Japan
Continuation of Ser. No. 394,497, Sept. 5, 1973, abandoned. This application Dec. 3, 1975, Ser. No. 637,278
Claims priority, application Japan, Sept. 6, 1972, 47-89326
Int. Cl.² G03C *1/68*
U.S. Cl. 96—115 R **3 Claims**

1. A photosensitive composition which consists essentially of: a photosensitive amount of a photosensitive resin containing units of the formulas:

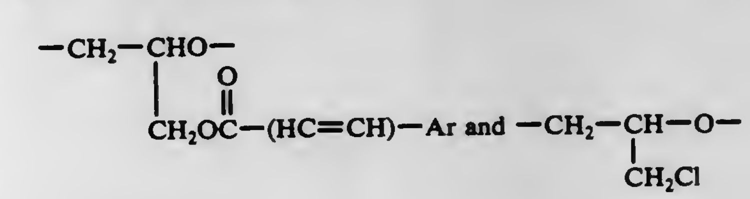

wherein Ar is phenyl in an amount of 4-methoxy-4-methylpentanone -2, 4-ethoxy-butanone-2 or 4-ethoxy-4-methylpentanone-2 sufficient to dissolve said photosensitive resin, to maintain an acceptable sensitivity of said composition, to stabilize said resin upon storage and to permit a uniform thin membrane to form when said composition is coated.

4,063,954
FLUORIDE-TYPE WITH HEAT SINK FOR CASTING MOLTEN REACTIVE AND REFRACTORY METALS
Robert A. Brown, Scio, Oreg., assignor to Rem Metals Corporation, Albany, Oreg.
Continuation-in-part of Ser. No. 448,254, March 5, 1974, abandoned, which is a continuation of Ser. No. 332,608, Feb. 15, 1973, abandoned, which is a continuation of Ser. No. 174,662, Aug. 25, 1971, abandoned. This application Aug. 1, 1975, Ser. No. 601,335
The portion of the term of this patent subsequent to Nov. 8, 1994, has been disclaimed.
Int. Cl.² B28B *7/34*
U.S. Cl. 106—38.3 **17 Claims**

1. In a mold for casting molten reactive and refractory metals, a facing portion comprising:
a. Finely divided particles of at least one member of the group consisting of the fluorides and oxyfluorides of the metals of Group Ia, IIa and IIIa, and the lanthanide and actinide series of Group IIIa, of the Mendeleevian Peri-

odic Chart of the atoms, said fluorides and oxyfluorides having free energies of formation at 1000° K. of at least 69 kilocalories per gram atom of contained oxygen and fluorine;

b. from 0.01 to 95 weight percent of particles of a heat sink material comprising at least one member of the group consisting of tungsten, molybdenum, tantalum, columbium and rhenium, said heat sink material being present in

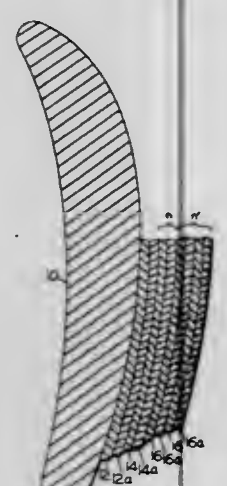

sufficient amount to convey heat from the mold interface rapidly enough to prevent melting and vaporization of said fluoride and oxyfluoride mold materials, and

c. a binder for said particles comprising from 0.1 to 30% by weight of an oxide of at least one metal of the group consisting of the Group III and Group IV metals of the Mendeleevian Periodic Chart, the metallic oxide having a free energy of formation at 1000° K. greater than 69 kilocalories per gram atom of oxygen in the oxide.

4,063,955
LOW THERMAL EXPANSION CERAMICS OF CORDIERITE SOLID SOLUTION AND METHOD FOR PRODUCING SAME
Carl William Fritsch, Jr., Dushore, and Robert Wade Wolfe, Towanda, both of Pa., assignors to GTE Sylvania Incorporated, Stamford, Conn.
Filed Oct. 3, 1975, Ser. No. 619,206
Int. Cl.[2] C04B *35/20;* **C03C** *3/22*
U.S. Cl. 106—39.6 **2 Claims**

1. A ceramic body characterized by consisting essentially of cordierite solid solution of from 14 to 18 weight percent MgO, 28 to 32 weight percent Al_2O_3, and 52 to 56 weight percent SiO_2, and having a linear thermal expansion of less than 900 ppm over the temperature range 25° C to 800° C.

4,063,956
HEAT STABLE MONOCLINIC BISMUTH VANADATE PIGMENT
James Francis Higgins, Livingston, N.J., assignor to E. I. Du Pont de Nemours and Company, Wilmington, Del.
Filed Sept. 16, 1976, Ser. No. 723,957
Int. Cl.[2] C09C *1/00*
U.S. Cl. 106—288 B **9 Claims**

1. Improved monoclinic bismuth vanadate pigment consisting essentially of monoclinic bismuth vanadate precoated with from 0.2 to 20% by weight of a hydrous metal oxide, a second coat of dense, amorphous silica in an amount of from 2 to 40% by weight and from 0 to 5% by weight of Al_2O_3 deposited thereon.

4,063,957
MANUFACTURE OF EASILY DISPERSED TRANSPARENT IRON OXIDE PIGMENTS
Hans Peter von Lauff, Velbert; Wolfgang Fabian, Wilhelmsfeld, and Heidrun Hellstern, Cologne, all of Germany, assignors to BASF Aktiengesellschaft, Ludwigshafen (Rhine), Germany
Filed Jan. 10, 1977, Ser. No. 758,207
Claims priority, application Germany, Jan. 28, 1976, 2603050
Int. Cl.[2] C09C *1/24*
U.S. Cl. 106—304 **11 Claims**

1. A process for the manufacture of easily dispersed, transparent iron oxide pigments of high tinctorial strength from iron oxide pigment pastes moist with water, which comprises homogenizing said paste in the presence of from 0.1 to 20 percent by weight, based on dry iron oxide, of a monohydric aliphatic or cycloaliphatic alcohol of 4 to 12 carbon atoms, which is only partially soluble in water and can be vaporized without decomposition, or of mixtures of such alcohols, under the action of shear forces, and drying the mixture under gentle conditions.

4,063,958
HYDROPHOBIC COMPOSITIONS
Michael Roth; Erhard Bosch, and Herbert Glück, all of Burghausen, Germany, assignors to Wacker-Chemie GmbH, Munich, Germany
Continuation of Ser. No. 487,845, July 11, 1974, abandoned. This application July 1, 1976, Ser. No. 701,469
Int. Cl.[2] C09C *3/12*
U.S. Cl. 106—308 Q **3 Claims**

1. A method for treating finely divided solids to impart hydrophobic properties thereto which comprises coating said finely divided solids with a substantially water insoluble metal organosiliconate by contacting an aqueous solution of finely divided solids containing a dissolved metal salt selected from the class consisting of beryllium, magnesium, calcium, strontium and barium with an aqueous solution of an alkali metal organosiliconate in which 1.0 to 2 equivalents of metal are present per equivalent of alkali metal in the alkali metal organosiliconate to form a coating thereon and thereafter separating the coated finely divided solids from the aqueous medium.

4,063,959
CONTINUOUSLY OPERATING SUGAR CENTRIFUGE
Walter Dietzel; Siegfried Matusch, and Volkmar Hentschel, all of Braunschweig, Germany, assignors to Braunschweigische Maschinenbauanstalt, Braunschweig, Germany
Filed Aug. 18, 1976, Ser. No. 715,615
Claims priority, application Germany, Mar. 4, 1976, 2608911
Int. Cl.[2] C13F *1/06, 1/10*
U.S. Cl. 127—19 **13 Claims**

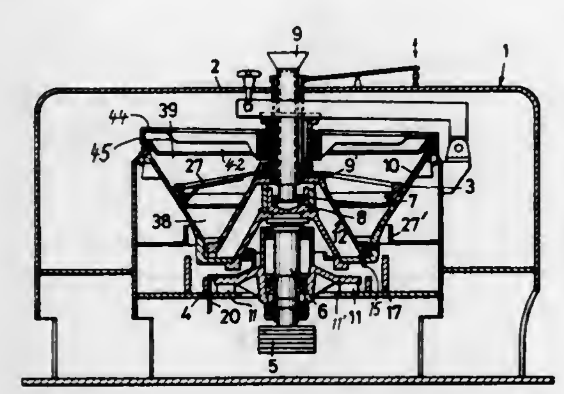

1. A continuously operating sugar centrifuge comprising a housing, drive shaft means supported in said housing for rotation about a vertical axis, and having an upper free end, acceleration cup means rigidly secured to said free shaft end, centrifugal basket means having a bottom and an upper rim also rigidly secured to said free shaft end, acceleration cone means secured for rotation and cooperation with said basket means and with said cup means, massecuite filling pipe means centrally reaching through said housing into said cup means, said acceleration cone means comprising preliminary separation means, green flow-off discharge means arranged for cooperation with said preliminary separation means, washing means located in said centrifugal basket near said bottom thereof, damming ring means secured in said housing in spaced relationship to said upper rim of said centrifugal basket to define a discharge gap between said upper rim and said damming ring means, discharge ring means supported in said housing for rotation about an axis extending at an angle relative to said vertical axis, said discharge ring means comprising downwardly extending collar means radially outwardly of said upper rim of said centrifugal basket means whereby a sugar exit area is confined to a definite zone along said upper rim of said centrifugal basket, and flow channel means arranged to receive sugar emerging from said exit area.

4,063,960
TREATMENT OF SUGAR CANE
Lewis A. Paley, 614 Adams St., Aurora, Ill. 60005
Filed May 2, 1972, Ser. No. 217,725
Int. Cl.[2] C13D *1/00, 1/02, 3/12;* **C13F** *1/00*
U.S. Cl. 127—42 **4 Claims**

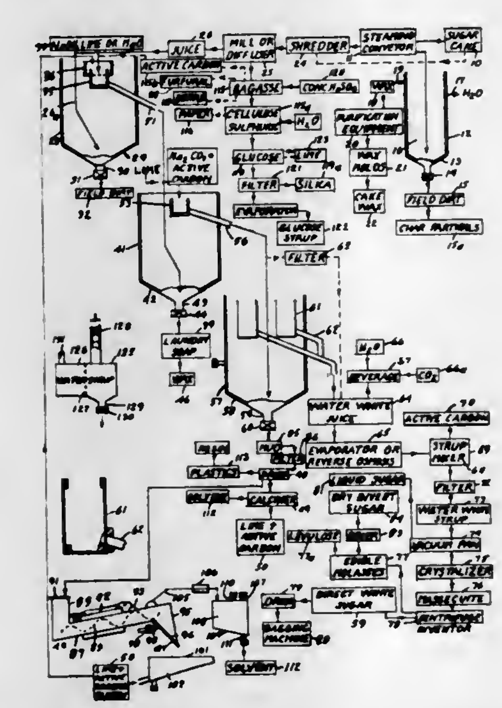

1. The method of treating cut sugar cane, which comprises depositing said cane on a conveyor, spraying steam on said cane to melt and remove wax and field dirt on the surface of said cane, and removing said melted wax and condensed steam below said conveyor after said steam condenses and passes through said conveyor and treating said steamed cane to produce direct white sugar and edible molasses.

4,063,961
METHOD FOR CLEANING CARPET
Lawrence F. Howard, 20599 Barnard Ave., Walnut, Calif. 91789, and James W. Mills, 16727 Fellowship, Valinda, Calif. 91744
Continuation of Ser. No. 461,859, April 18, 1974, abandoned. This application Apr. 26, 1976, Ser. No. 680,070
Int. Cl.[2] B08B *1/04, 3/00, 5/04*
U.S. Cl. 134—4 **9 Claims**

1. A process for cleaning shag type carpet comprising the sequential steps of lifting, opening and agitating the carpet pile with counter-rotating brushes, beating and vacuuming the carpet to remove over 95% of the foreign matter therefrom, applying a mist of cleaning agent over the carpet to encapsulate the fibers thereof, allowing the cleaning agent to remain in a quiescent state for a period of at least 2 minutes, agitating the carpet pile with the cleaning agent thereon with counter-rotating brushes, allowing the carpet to dry and vacuuming the carpet.

5. A process for cleaning carpet with a profile having about $\frac{1}{4}$ to $\frac{3}{8}$ inch high fibers comprising the sequential steps of lifting, opening and agitating the carpet pile with an oscillatory brush and vacuuming the carpet to remove over 95% of the foreign matter therefrom, applying a mist of cleaning agent over the carpet fibers, allowing the cleaning agent to remain in a quiescent state for a period of at lease two minutes, agitating the carpet pile with the cleaning agent thereon with a rotary brush, allowing the carpet to dry and vacuuming the carpet.

7. A process for cleaning high-low carpets comprising the sequential steps of lifting, opening and agitating the carpet pile with counter-rotating brushes and vacuuming the carpet to remove over 95% of the foreign matter therefrom, applying a mist of cleaning agent over the carpet to encapsulate the fibers thereof, allowing the cleaning agent to remain in a quiescent state for a period of at least two minutes, agitating the carpet pile with the cleaning agent thereon with rotating brushes, allowing the carpet to dry and vacuuming the carpet.

4,063,962
METHOD AND APPARATUS FOR CLEANING NUCLEAR FUEL ELEMENTS
Satya Prakash Arya, San Diego, and Walter Woodrow Godsin, Oceanside, both of Calif., assignors to General Atomic Company, San Diego, Calif.
Filed Apr. 7, 1976, Ser. No. 674,376
Int. Cl.[2] B08B *9/04*
U.S. Cl. 134—8 **13 Claims**

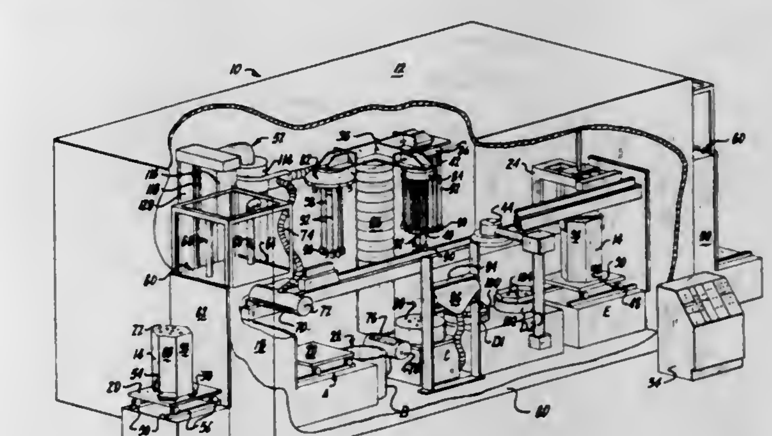

1. Apparatus for cleaning carbonized pitch residue from surfaces of nuclear fuel elements following in-block, high temperature curing of the nuclear fuel containing pitch, the fuel element having opposed end surfaces with a plurality of lateral surfaces therebetween and one or more longitudinal passages extending through the fuel element between its end surfaces, comprising

an enclosure for preventing escape of pitch residue from the surfaces of the fuel element into the environment during cleaning,

air-lock means for introducing the fuel element into the enclosure,

means for moving the fuel element between a plurality of stations within the enclosure, the stations including

means for cleaning one end surface of the fuel element,

means for cleaning the other end surface of the fuel element,

probe means engageable with one end of the fuel element for determining the presence of certain longitudinal passages therein,

means responsive to the probe means for aligning cleaning elements with respective longitudinal passages in the fuel element, the cleaning elements being extendable through the longitudinal passages in order to engage and clean the surrounding surfaces of the fuel element along the length of the passages,

means for cleaning the lateral surfaces of the fuel element, and

air-lock means for permitting exit of the fuel element from the enclosure after cleaning.

9. A method for cleaning the surfaces of nuclear fuel elements having opposed end surfaces, a plurality of lateral surfaces therebetween and one or more longitudinal passages extending through the fuel element between the end surfaces, the steps comprising

cleaning one end surface of the fuel element,
cleaning the other end surface of the fuel element,
sensing the configuration of one or more longitudinal passages in the fuel element,
aligning a cleaning element with a respective longitudinal passage in the fuel element,
causing the cleaning element to extend through the longitudinal passage in order to engage and clean the fuel element surfaces forming the longitudinal passage along the entire length of the passage,
gauging selected surfaces of the fuel element in order to determine if it is satisfactorily cleaned, and
performing said cleaning steps within an enclosure, for containing foreign material cleaned from the fuel element surfaces.

4,063,963

TERRESTRIAL PHOTOVOLTAIC SOLAR CELL PANEL

John W. Bond, Jr., 6621 Wakefield Drive, Apt. 306, Alexandria, Va. 22307

Filed Oct. 6, 1976, Ser. No. 729,745
Int. Cl.² H01L *31/04*
U.S. Cl. 136—89 P **5 Claims**

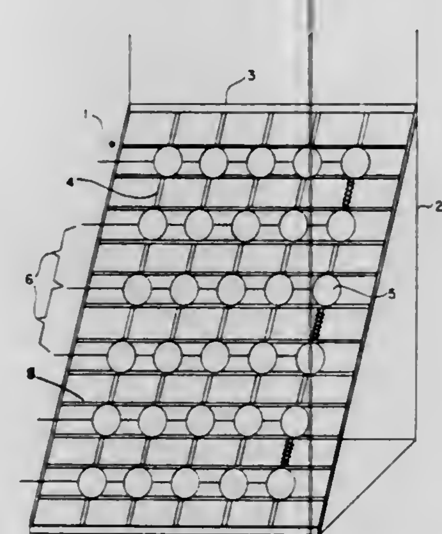

1. A photovoltaic solar cell array for terrestrial applications comprising:
an open frame;
first and second open gridworks each extending from side to side within said frame and spaced one from the other;
a plurality of photovoltaic solar cell elements edge mounted between said gridworks in sandwich relation;
an electrical connection means connected to each of said solar cell elements of said plurality thereof for utilization of the photovoltaic output of said solar cell elements.

2. The photovoltaic solar cell array as defined in claim 1 wherein a resistive heating means is mounted on the top surface of said cell elements.

4,063,964

METHOD FOR FORMING A SELF-ALIGNED SCHOTTKY BARRIER DEVICE GUARDRING

Peter Paul Peressini, Wappingers Falls; Timothy Martin Reith, Poughkeepsie, and Michael James Sullivan, Red Hook, all of N.Y., assignors to International Business Machines Corporation, Armonk, N.Y.

Filed Dec. 27, 1976, Ser. No. 754,218
Int. Cl.² H01L *21/265*
U.S. Cl. 148—1.5 **16 Claims**

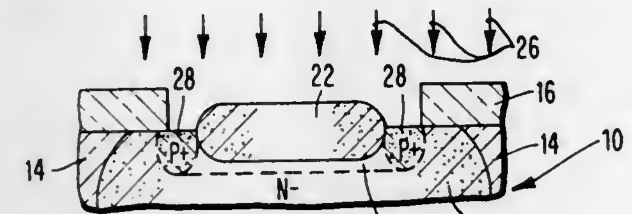

1. Method for forming a self-aligned guard ring surrounding a Schottky barrier device comprising:
opening a region in an insulator to expose a silicon surface;
depositing a Schottky barrier forming metal through said opening;
heat treating the structure to form the metal silicide contact for said Schottky barrier device wherein there is a volume shrinkage forming a narrow annulus of exposed silicon around said metal silicide contact;
removing any said metal that has not been reacted to said metal silicide; and
ion implanting an ion of opposite polarity to the exposed silicon to form a guardring surrounding the Schottky barrier device.

4,063,965

MAKING DEEP POWER DIODES

Harvey E. Cline, and Thomas R. Anthony, both of Schenectady, N.Y., assignors to General Electric Company, Schenectady, N.Y.

Continuation-in-part of Ser. No. 519,249, Oct. 30, 1974, Pat. No. 3,956,023, and a continuation-in-part of Ser. No. 411,001, Oct. 30, 1973, abandoned. This application May 11, 1976, Ser. No. 685,285
Int. Cl.² H01L *21/208*
U.S. Cl. 148—1.5 **21 Claims**

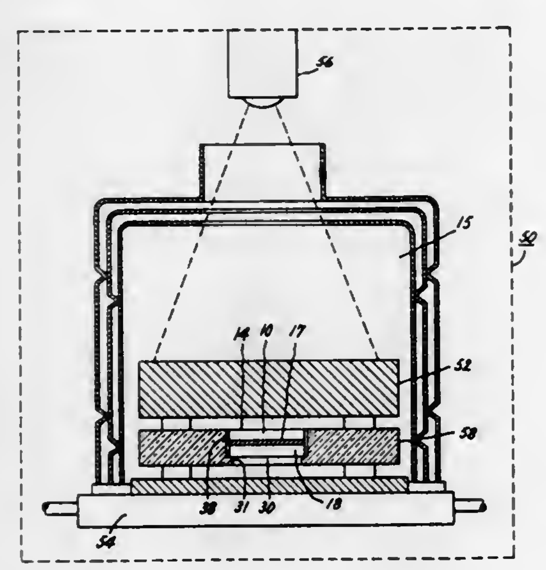

1. A process for making a semiconductor device comprising:
a. selecting a first body of single crystal silicon semiconductor material having top and bottom surfaces which are opposed major surfaces thereof and at least the top surface has a preferred crystal orientation corresponding to the natural solid-liquid facet plane thereof;
b. vapor depositing a first layer of metal comprising at least

aluminum of a preferred thickness on the top surface of the first body and in intimate contact therewith;
c. placing the first body in an abutting contact relationship with a second body of single crystal silicon semiconductor material having top and bottom surfaces which are opposed major surfaces thereof wherein the layer of metal on the top surface on the first body is in an abutting contact relationship with the top surface of the second body;
d. heating the two bodies and the layer of metal to an elevated temperature sufficient to form a molten region of the metal of the layer and the semiconductor material of the two bodies in contact therewith, the molten region having a preferred thickness not greater than the value of L which is determined from the following relationship

$$L \leq \frac{200 \text{ atomic \% silicon/cm/sec} \times V}{\left(\frac{dC}{dt}\, G_L\right)}$$

where
L is the thickness of the molten region in centimeters,
V is the velocity of the molten zone through the solid semiconductor material in centimeters per second,
(dc/dt) is the change in concentration of silicon in the molten zone with respect to change in temperature in atomic % of silicon per degree celsius, and
G_L is the temperature gradient across the thickness of molten region in degrees celsius per centimeter;
e. establishing a thermal gradient substantially along a preferred crystallographic axis of the first body which is normal to the natural solid-liquid facet plane of the semiconductor metal-liquid surface wherein the bottom surface of the first body is at the highest temperature;
f. migrating the molten zone through the first body from the top to the bottom surfaces substantially along the preferred axis to form a first region of recrystallized material of a selected portion of the second body having solid solubility of the metal of the layer therein of the second body and to form a second region of recrystallized material of the second body having solid solubility of the metal of the layer therein, the solid solubility metal imparting a selected type conductivity and a selected level of resistivity to the two regions, the first and second regions being integral with each other, substantially free of metal inclusions, and having the crystalline structure of the second body, and
g. joining together the two bodies of semiconductor material by the integral regions of recrystallized semiconductor material.

4,063,966

METHOD FOR FORMING SPACED ELECTRICALLY ISOLATED REGIONS IN A BODY OF SEMICONDUCTOR MATERIAL

Thomas R. Anthony, and Harvey E. Cline, both of Schenectady, N.Y., assignors to General Electric Company, Schenectady, N.Y.

Continuation-in-part of Ser. No. 519,913, Nov. 1, 1974, Pat. No. 3,979,230, which is a continuation-in-part of Ser. No. 411,022, Oct. 30, 1973, Pat. No. 3,904,442. This application Apr. 14, 1976, Ser. No. 676,994
The portion of the term of this patent subsequent to Sept. 7, 1993, has been disclaimed.
Int. Cl.² H01L *21/208*
U.S. Cl. 148—1.5 **37 Claims**

1. A method for making a grid arrangement in a body of semiconductor material of a semiconductor device to produce a plurality of regions of semiconductor material of the body electrically isolated from one another, the method comprising
a. selecting a body of single crystal semiconductor material having a preferred crystallographic structure, two major opposed surfaces being respectively the top and bottom surfaces thereof, a preferred planar orientation of at least the top surface, the planar orientation being one selected from the group consisting of (100) and (111), a first selected type conductivity, a selected level of resistivity and having a vertical axis substantially aligned with a first axis of the crystal structure;
b. forming a first region of second type conductivity in the body including the bottom surface thereof, a P-N junction being formed by the contiguous surfaces of the material of the body and the region and being substantially parallel to the major surface;
c. etching selectively the major surface having the preferred planar orientation to form an array of planar trough-like depressions in the surface thereof, the trough-like depressions being oriented substantially aligned with a first preferred wire direction;
d. disposing at least one dopant material in each of the trough-like depressions in intrinsic contact with the material of the body which when migrated through the body will convert the material of the body to a second type conductivity and a selected resistivity;
e. heating the body and the metal wires to a preselected elevated temperature to form an array of liquid wires of metal and semiconductor material in the trough-like depressions on the surface;
f. establishing a temperature gradient of from 50° C/cm to 200° C/cm substantially along the vertical axis aof the body, the surface on which the liquid wires are formed being at the lower temperature;
g. migrating the liquid wires through the body and the first region from one major opposed surface to the other major opposed surface substantially along the vertical axis of the

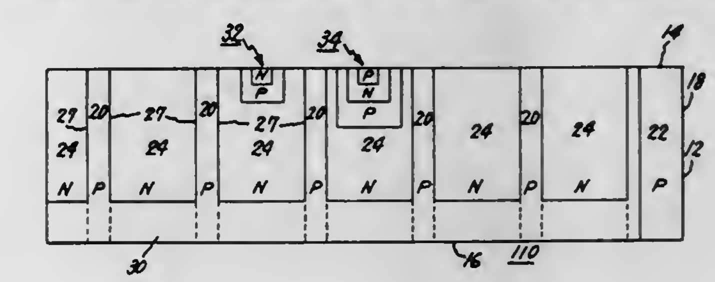

body and the first axis of the crystal structure to form a plurality of planar regions of recrystallized semiconductor material of the body having solid solubility of at least the dopant material therein which intersect and are integral with the first region;
h. etching selectively the top surface of the body to form a second array of linear trough-like depressions in the top surrface thereof, each of the trough-like depressions being oriented substantially aligned with a second preferred wire direction and at a first preselected angle to the first wire direction;
i. disposing at least one dopant material in each of the trough-like depressions in intiamate contact with the material of the body which when migrated through the body and the first region will convert the material of the body to a second type conductivity and a second resistivity;
j. heating the body and the material in the trough-like depressions to an elevated temperature sufficient to form an array of liquid wires of metal and semiconductor material in the trough-like depressions in the top surface;
k. establishing a temperature gradient substantially along the vertical axis of the body, the top surface being at the lower temperature; and
l. migrating the liquid wires through the body and the first region from the top to the bottom surface substantially along the vertical axis of the body and the first axis of the crystal structure to form a plurality of second planar regions, which intersect and are integral with the first region and the plurality of first planar regions, the material of the second planar regions comprising recrystallized semiconductor material of the body having solid solubility of the at least one metal therein.

4,063,967

METHOD OF PRODUCING A DOPED ZONE OF ONE CONDUCTIVITY TYPE IN A SEMICONDUCTOR BODY UTILIZING AN ION-IMPLANTED POLYCRYSTALLINE DOPANT SOURCE

Jürgen Graul, Gruenwald, and Helmuth Murrmann, Ottobrunn, both of Germany, assignors to Siemens Aktiengesellschaft, Berlin & Munich, Germany

Filed Oct. 9, 1975, Ser. No. 621,071

Claims priority, application Germany, Oct. 18, 1974, 2449688

Int. Cl.^{2} H01L *21/265, 21/225*

U.S. Cl. 148—1.5 10 Claims

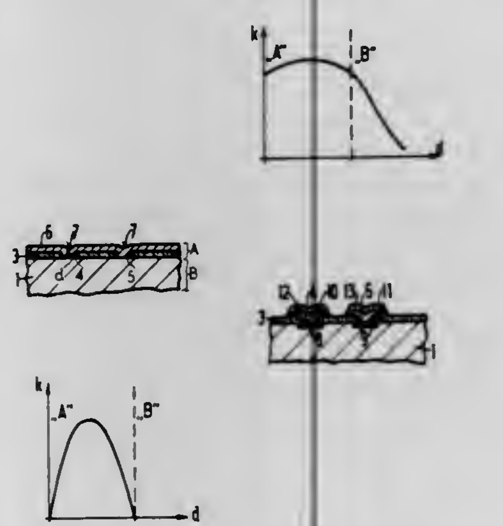

1. A process for producing a doped zone of one conductivity type in a monocrystalline semiconductor body comprising:
applying a dopant-impermeable masking layer onto a select surface of said semiconductor body, said masking layer having at least one window therein for providing access to at least one select zone of the semiconductor body which is to be doped;
applying a polycrystalline semiconductor layer uniformly over said masking layer and said select zone of the semiconductor body;
ion implanting a dopant in said polycrystalline semiconductor layer; and
diffusing said dopant from the polycrystalline semiconductor layer through said window in the masking layer and into the select zone of the semiconductor body.

4,063,968

FORMATION OF NICKEL PHOSPHATE COATINGS ON IRON OR STEEL

Yasunobu Matsushima, Kawasaki; Shigeo Tanaka, Yokohama, and Akira Niizuma, Tokyo, all of Japan, assignors to Oxy Metal Industries Corporation, Warren, Mich.

Filed Sept. 29, 1975, Ser. No. 617,757

Claims priority, application Japan, Oct. 4, 1974, 49-113766

Int. Cl.^{2} C23F *7/10*

U.S. Cl. 148—6.15 R 3 Claims

1. A process for forming a protective crystalline nickel phosphate coating on an iron or steel surface comprising first contacting the surface with an alkaline alkali metal phosphate solution exhibiting a pH of from 8 to 12 containing 0.5–20 g/l of nickel phosphate suspended therein and thereafter contacting the surface with an aqueous composition consisting essentially of:
1 - 10 g/l of hydroxy carboxylic acid selected from the group consisting of salicylic, gallic, lactic, tartaric, citric, malic, glyceric, glycolic, mandelic and tropic acids
3–50 g/l of phosphate (as P_2O_5)
2–6 g/l of nickel
and having a Total Acid value of 10–50 points and a Free Acid value of 1–5 points, whereby a crystalline coating of nickel phosphate is formed on the surface.

4,063,969

TREATING ALUMINUM WITH TANNIN AND LITHIUM

John K. Howell, Jr., Rochester, Mich., assignor to Oxy Metal Industries Corporation, Warren, Mich.

Filed Feb. 9, 1976, Ser. No. 656,216

Int. Cl.^{2} C23F *7/00*

U.S. Cl. 148—6.27 14 Claims

1. An aqueous chromium-free concentrate composition comprising a vegetable tannin compound and a soluble lithium compound in an amount, at least 0.001 g/l, sufficient, when the concentrate is diluted for use, to improve the corrosion resistance of an aluminum surface treated therewith.

4,063,970

METHOD OF MAKING PERMANENT MAGNETS

Erich A. Steingroever, Bonn, Germany, assignor to Magnetfabrik Bonn G.m.b.H. vormals Gewerkschaft Windhorst, Bonn, Germany

Division of Ser. No. 101,108, Dec. 23, 1970, abandoned, which is a continuation of Ser. No. 706,064, Feb. 16, 1968, abandoned. This application July 23, 1975, Ser. No. 598,342

Claims priority, application Germany, Feb. 18, 1967, 72816

Int. Cl.^{2} H01F *1/02*

U.S. Cl. 148—103 7 Claims

1. Method of producing a permanent magnet body, comprising the steps of:
a. producing anisotropic first ferromagnetic permanent magnet material by sintering particles of starting material suitable for making permanent magnets at a preselected optimum temperature;
b. terminating said heating when said sintered magnet material has reached full remanence;
c. grinding said sintered first ferromagnetic permanent magnet material to a powder, the particles of said ground powder having the following characteristics:
1. coercivity ${}_JH_C$ below the maximum obtainable value for said particles and at least equal to the remanence of the finally produced magnet body;
2. remanence $4\pi J_R$ between 1.2 and 1.6 times the remanence B_R of the finally produced magnet body, and;
3. a fullness factor

$$\frac{(4\pi J\cdot H)_{max}}{4\pi J_S\cdot {}_JH_C}$$

of at least 0.6;
d. mixing said powder particles with a curable nonmagnetic binder;
e. compacting said powder particles and binder under pressure and under the influence of a magnetic field in a machine to form the shape and size of the final magnet body:
f. removing said shaped and compacted body from the forming machine, and;
g. heating said compacted magnet body at a temperature and for a period of time to cure the binder but insufficient to significantly change the dimensions of said body.

4,063,971

METHOD OF INCREASING THE COERCIVE FORCE OF PULVERIZED RARE EARTH-COBALT ALLOYS

Ekkehard Greinacher; Klaus Reinhardt, both of Essen, Germany, and Karl Strnat, Fairborn, Ohio, assignors to Th. Goldschmidt AG, Essen, Germany

Continuation-in-part of Ser. No. 62,005, Aug. 7, 1970, abandoned. This application Feb. 18, 1971, Ser. No. 116,533

Claims priority, application Germany, Aug. 8, 1969, 1940464

Int. Cl.^{2} H01F *1/02*

U.S. Cl. 148—105 11 Claims

1. A method of maintaining the coercive force of particulate rare earth-cobalt alloys at least at its initial value, which comprises enveloping substantially each alloy particle with a layer of solid tin and then heating the enveloped particles to a tem-

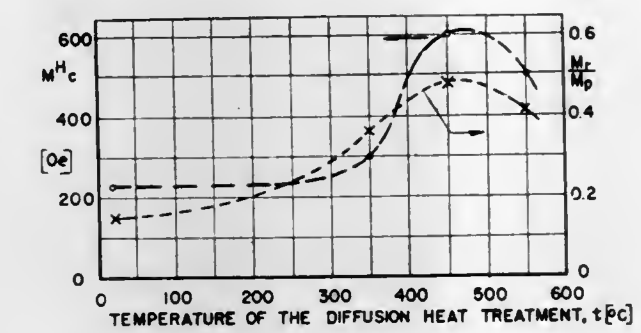

perature sufficiently high so as to cause diffusion of tin into the particle structure.

4,063,972

METHOD FOR GROWING EPITAXIAL LAYERS ON MULTIPLE SEMICONDUCTOR WAFERS FROM LIQUID PHASE

Shin-ichi Akai, Osaka; Hideki Mori, Sakai; Takashi Shimoda, Osaka, and Shin-ichi Iguchi, Nishinomiya, all of Japan, assignors to Sumitomo Electric Industries, Ltd., Osaka, Japan

Filed Mar. 17, 1976, Ser. No. 667,867

Claims priority, application Japan, Mar. 26, 1975, 50-37319

Int. Cl.^{2} H01L *21/208*

U.S. Cl. 148—171 13 Claims

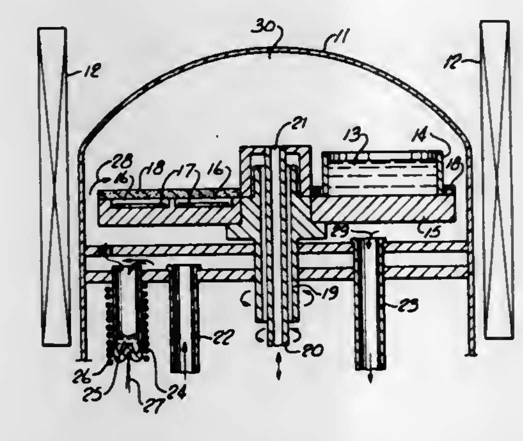

1. A method for simultaneously growing a plurality of single-crystal epitaxial layers of semiconductors on a plurality of suitable substrates from the liquid phase comprising the steps of,
placing the substrates respectively in a plurality of wells which are provided in a surface of a rotatable circular lower plate,
positioning a solution reservoir which has a solution supplying opening at the bottom on a radius of and on said lower plate surface,
covering said lower plate except the position of said reservoir with a circular upper plate which is provided in a non-rotatable state relative to said reservoir,
supplying small portions of liquid solution from said reservoir through said reservoir opening onto the surfaces of all said substrates by rotating said lower plate relative to said upper plate and said reservoir, and thereby constraining each of the supplied solution portions in shape and volume by the confines of said upper plate and each of said wells, and
simultaneously growing an epitaxial layer from each of the constrained solutions on each of said substrates.

4,063,973

METHOD OF MAKING A SEMICONDUCTOR DEVICE

Kei Kirita, Tokyo; Yasutaka Tsuji, Kawasaki, and Takahiko Moriya, Yokosuka, all of Japan, assignors to Tokyo Shibaura Electric Co., Ltd., Japan

Filed Nov. 4, 1976, Ser. No. 738,841

Claims priority, application Japan, Nov. 10, 1975, 50-133953; May 10, 1976, 51-52146; June 1, 1976, 51-62962

Int. Cl.^{2} H01L *21/225*

U.S. Cl. 148—188 10 Claims

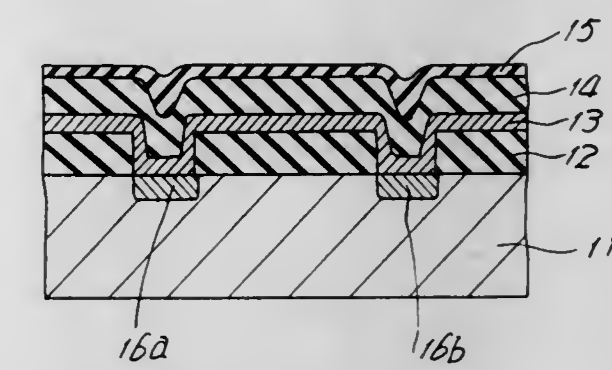

1. A method of making a semiconductor device comprising:
a. preparing a semiconductor substrate;
b. depositing a non-monocrystalline semiconductor layer doped with predetermined impurity atoms on at least a portion of said semiconductor substrate;
c. depositing an oxide layer doped with the same type of impurity atoms as said predetermined impurity atoms on said non-monocrystalline semiconductor layer, thus forming a double layer diffusion source; and
d. heating the semiconductor substrate to diffuse said impurity atoms from said double layer diffusion source into the semiconductor substrate and to form a diffused region in the substrate.

4,063,974

PLANAR REACTIVE EVAPORATION METHOD FOR THE DEPOSITION OF COMPOUND SEMICONDUCTING FILMS

Lewis M. Fraas, Malibu, Calif., assignor to Hughes Aircraft Company, Culver City, Calif.

Filed Nov. 14, 1975, Ser. No. 631,981

Int. Cl.^{2} H01L *21/205, 21/18*

U.S. Cl. 148—175 15 Claims

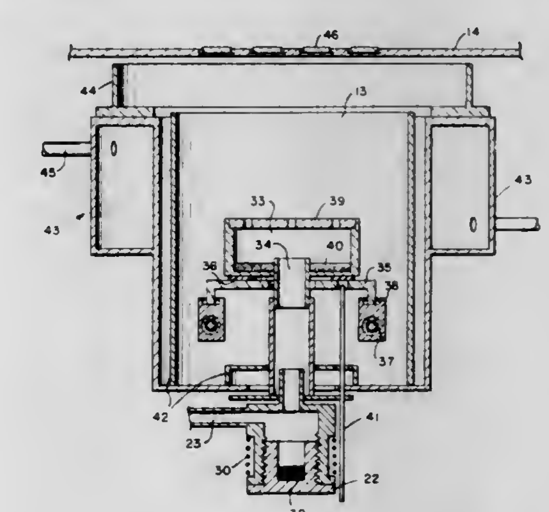

1. A method of heteroepitaxially depositing MX compound films onto a single crystal substrate at low temperatures where M is a metal taken from the group consisting of the elements in Groups II and III of the periodic table and X is an element taken from the group consisting of the elements in Groups V and VI of the periodic table comprising the steps of:
a. preheating said substrate to a temperature above the film epitaxial temperature and below the decomposition temperature of said substrate,

b. creating an ultra-pure reaction environment within a planar evaporative source cavity by evacuating a vacuum chamber surrounding said cavity and said substrates to an atmospheric pressure of less than 10^{-8} torr,
c. creating a negative temperature gradient between said source cavity and said substrate by raising the temperature of said cavity to a temperature sufficient to cause an appreciable increase in the vapor pressure of an M component metal placed in said cavity,
d. introducing an X-component hydride gas at a controlled flow rate of the order of 3×10^{-4} torr into said planar source cavity whereby the elevated temperature of said cavity will cause said gas to dissociate in the presence of said M component vapors to form an M component vapor-X component vapor and H_2 gas mixture, and
e. directing said mixture to said substrate whereby said M component will react with said X component vapors deposited on the surface of said substrate to form an MX compound film and said H_2 gas will be evacuated from said chamber.

4,063,975
COLORED COMPOSITION OF EXPLOSIVES
Kåre Ragnvald Fossan, Nora, and Gunnar Olof Ekman, Gyttorp, both of Sweden, assignors to Nitro Nobel AB, Gyttorp, Sweden
Filed Aug. 2, 1976, Ser. No. 710,549
Claims priority, application Sweden, Sept. 1, 1975, 7509682
Int. Cl.² C06B *25/34*
U.S. Cl. 149—92 **6 Claims**

1. A stained explosive composition in a water-gelatin base comprising oxidizing salts and a water-insoluble hydrocarbon or a mixture of water-insoluble hydrocarbons, said hydrocarbon having dissolved therein a water-insoluble coloring material.

4,063,976
PLASTERBOARD MANUFACTURE
Alan James Bradley Wain, West Bridgford; Frank Lyn Boot, Wilford, and John Eric Baines, all of Woodthorpe,, England, assignors to BPB Industries Limited, London, England
Filed June 13, 1975, Ser. No. 586,810
Claims priority, application United Kingdom, June 13, 1974, 26321/74
Int. Cl.² B32B *31/12, 13/08*
U.S. Cl. 156—44 **13 Claims**

1. A method of making plaster or gypsum board in which a core is formed from an aqueous slurry of calcium sulphate plaster disposed between paper sheets, said slurry including starch employed as a dry bond assistant, characterized in that the faces of the paper sheets which are to contact the slurry are treated with a solution consisting of water-soluble zirconium salt and a solvent therefor whereby migration of the starch into the paper is reduced.

4,063,977
PROCESS FOR WELDING TOGETHER A COVER AND A VESSEL OF THERMOPLASTIC MATERIAL, AND COVER INTENDED FOR USE IN THE PROCESS
Chester Groby, Nol, Sweden, assignor to Aktiebolaget Tudor, Sundbyberg, Sweden
Filed Aug. 12, 1976, Ser. No. 713,898
Claims priority, application Sweden, Aug. 15, 1975, 7509151
Int. Cl.² B29C *27/02*
U.S. Cl. 156—69 **6 Claims**

1. A process for welding together the edges of a cover and a vessel, the vessel carrying protrusions which project beyond the upper edge of the vessel, said process comprising the steps of:
providing a vessel having an upper edge and carrying upwardly extending protrusions which project beyond the vessel edge;
providing a cover having a lower edge alignable with the vessel upper edge;
aligning the edges of the vessel and the cover;
disposing a welding tool comprising separable sections between the edges of the cover and vessel so that substantially the whole vessel opening is left free and said protrusions are spaced from the tool sections;

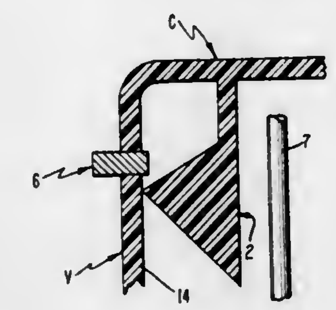

heating the welding tool to heat the edges of the cover and the vessel;
separating the edges and the tool by a short distance;
separating the welding tool sections in different directions without passing across the vessel opening so as to avoid the protrusions; and
thereafter joining the edges of the cover and the vessel together.

4,063,978
BATTERY SEPARATOR ASSEMBLY MACHINE
John P. Badger, Genoa, and Robert D. Simonton, Fremont, both of Ohio, assignors to Eltra Corporation, Toledo, Ohio
Filed June 3, 1974, Ser. No. 475,480
Int. Cl.² B32B *31/12;* **H01M** *2/14*
U.S. Cl. 156—82 **4 Claims**

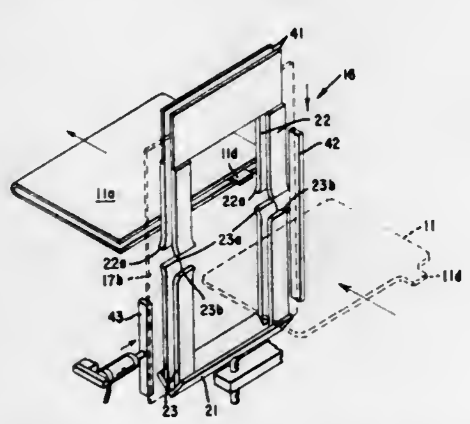

1. A method of assembling battery plates and plate separators comprising the steps of moving a flexible generally planar separator sheet between opposed and spaced apart separator guides, retaining said separator sheet loosely between said guides in generally unrestrained condition and supported in a holding position, moving a battery plate in a direction substantially normal to said planar sheet toward such holding position to intersect said separator sheet at the midpoint thereof with the leading edge of said battery plate, continuing movement of said battery plate through said holding position to draw such unrestrained flexible sheet from between said separator guides thereby folding said separator sheet over said battery plate, and thereafter adhering adjacent surfaces of said folded sheet to one another, thereby forming a battery plate covered by an envelope formed by said folded separator sheet.

4,063,979
METHOD OF MAKING A TIRE
Ronald L. Rongone, Cuyahoga Falls, Ohio, assignor to The Goodyear Tire & Rubber Company, Akron, Ohio
Filed Sept. 13, 1976, Ser. No. 722,904
Int. Cl.² B29H *9/00*
U.S. Cl. 156—123 R **2 Claims**

1. In a method of making a tire having improved resistance to interface separation, including the steps of compounding a sulfur curable diene rubber to give a masterbatch, forming said masterbatch into tire building components, including reinforcing material, plying up the tire building components into a tire and curing in a tire shaper to give a tire, the improvement comprising incorporating 2 to 14 parts of furfural-butadiene resin per 100 parts of said masterbatch.

4,063,980
METHOD OF MAKING A PRESS-FIT PIPE JOINT
Harold K. Trunnell, Shaw Island, Wash. 98286
Filed May 19, 1975, Ser. No. 578,902
Int. Cl.² B23P *19/02*
U.S. Cl. 156—165 **7 Claims**

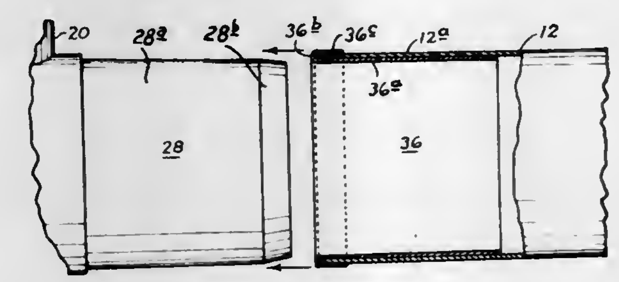

1. A method of making a rigid press-fit joint between a pipe and a coupler for the pipe where the coupler has a tubular portion of greater outer diameter than the inner diameter of the pipe comprising
providing a sheathing element having an annular portion sized to fit closely within an end of said pipe, said annular portion including means defining openings therein, said sheathing element further including a radially outwardly projecting rim portion joined to said annular portion and a turned over outer lip portion joined to said rim portion,
mounting said sheathing element on said end of said pipe with said annular portion received within and bounding the inner circumference of said pipe and said openings then forming pockets along the inner surface of said pipe, said rim portion becoming located adjacent the end edge of said pipe and said lip portion becoming located around the outer circumference of said pipe,
incorporating a bonding agent into said openings whereby such resides within said pockets with said sheathing element mounted in place,
forcing the pipe with the sheathing element mounted thereon and with the bonding agent residing in said openings onto the tubular portion of the coupler with sufficient pressure whereby the sheathed end of the pipe moves over the tubular portion of the coupler to envelope said tubular portion and with the sheathed pipe end enlarging in diameter, said sheathing element provides means for inhibiting galling between said pipe and coupler during said forcing, and
curing said adhesive to bond the pipe and tubular portion together.

4,063,981
METHOD OF MAKING A COMPOSITE SANDWICH LATTICE STRUCTURE
Marvin D. Rhodes, Yorktown, and Martin M. Mikulas, Jr., Williamsburg, both of Va., assignors to The United States of America as represented by the Administrator of the National Aeronautics and Space Administration, Washington, D.C.
Division of Ser. No. 723,264, Sept. 14, 1976. This application May 20, 1977, Ser. No. 799,024
Int. Cl.² B29C *11/00, 27/30;* **B32B** *3/12*
U.S. Cl. 156—245 **2 Claims**

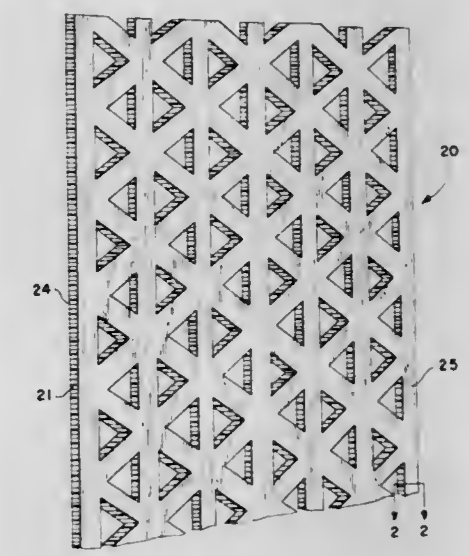

1. A method of making a lightweight composite sandwich lattice structural panel comprising:
providing a mold formed of top and bottom halves each of which has an identical matching angular grid groove pattern formed in the surfaces thereof facing each other when the mold halves are assembled,
coating the individual grooves in the matching grid patterns with a chemical release agent,
providing silicon rubber blankets precut to match the grid pattern in each of the mold halves and positioning these blankets, one each, in the grid grooves of the mold halves,
coating each silicon rubber blanket with a chemical release agent,
positioning individual strips of prepreg tape over the silicon rubber blankets to form a tape surface in each groove of the grip patterns,
providing a honeycomb core sheet having a plurality of honeycomb cells extending transversely therethrough with angular portions of the sheet being removed to provide a lattice network that will mesh with the grid grooves of the top and bottom mold halves,
coating the honeycomb core sheet with a bonding adhesive and positioning the top and bottom mold halves to enclose the core sheet therebetween and in contact with the prepreg tape strips,
applying pressure to and heating the closed mold at a temperature of approximately 200° F for approximately 15 minutes to bond the honeycomb core and prepreg tapes into a unitary structural panel,
removing the unitary structural panel to a vacuum oven and heating the panel under vacuum at a temperature of 355° ± 10° F for a period of 120 ± 5 minutes to effect thermosetting cure of the resin in the prepreg tapes, and
recovering a lightweight composite sandwich lattice structural panel from the oven.

4,063,982
METHOD OF MAKING A COMPOSITE SURFACE ELEMENTS OF STONE AND LIGHTWEIGHT SHEET MATERIAL

Patrick Terence Bourke, Doon House, Maam, County Galway, Ireland
Continuation-in-part of Ser. No. 394,138, Sept. 4, 1973, Pat. No. 3,963,846. This application May 12, 1976, Ser. No. 686,213
Claims priority, application United Kingdom, Sept. 4, 1972, 40839/72; Jan. 19, 1973, 2795/73
Int. Cl.² B32B *31/00*
U.S. Cl. 156—254 **1 Claim**

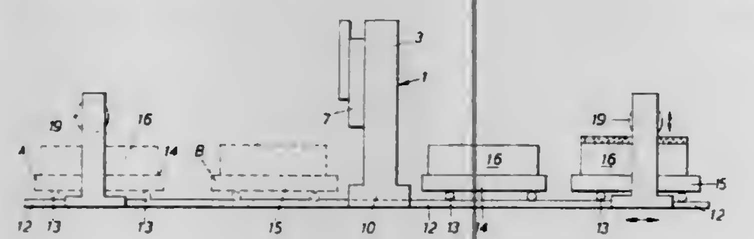

1. A method of manufacturing composite surface elements each comprising a lamina of natural facing stone bonded by adhesive to a backing sheet consisting of a core of light-weight sheet material which is resistant to compressive forces in a direction substantially normal to the plane of the sheet, comprising the steps of:

i. cutting a block of natural facing stone into a number of slabs, two opposite faces of which are substantially parallel and each of which has a thickness greater than twice the thickness of the desired lamina;
ii. drying the cut slabs;
iii. applying and bonding to each of the two opposed faces of each stone slab a backing sheet comprising a core of light-weight sheet material which is resistant to compressive forces in a direction substantially normal to the plane of the sheet;
iv. positioning each slab, with the backing sheets attached to the opposite faces thereof, between oppositely arranged vacuum-operated suction caps;
v. applying suction to the cups to hold the slab rigidly in position therebetween;
vi. sawing the slab in two along a cutting plane substantially parallel to and midway between said faces to leave a thin stone layer adhered to each said backing sheet, and during said sawing step maintaining said suction to prevent relative movement of the partly-cut stone layers; and
vii. before or after the sawing step bonding a skin of sheet material of greater tensile strength than the backing sheet to the surface of the core opposite the stone lamina.

4,063,983
ORBITAL HEAT SEALING APPARATUS AND METHOD

James H. Shiverdecker, Dayton, Ohio, assignor to Bergstein Packaging Trust, Middletown, Ohio
Filed Oct. 20, 1975, Ser. No. 623,638
Int. Cl.² B31B *1/64;* **B32B** *31/20;* **B65B** *51/10*
U.S. Cl. 156—306 **10 Claims**

1. Apparatus for heat sealing a continuously moving tubular liner and the like wherein the opposite sides of the liner in the area to be sealed are repeatedly contacted by the same pair of heating elements to incrementally form a relatively narrow continuous line of seal, liner advancing means for continuously advancing the liner in a straight-line path of travel, an opposing pair of elongated sealing bars lying in face-to-face relation on opposite sides of the path of the liner, said sealing bars being positioned to contact the opposite sides of the liner only in the area thereof to be heat sealed, means mounting said sealing bars for movement relative to each other in orbital paths of travel in which the sealing bars during each orbital cycle advance and retract in the direction of their length as they concurrently move toward and away from each other while maintaining their face-to-face relationship, means for moving said sealing bars in unison in their orbital paths of travel, and means for driving said sealing bar moving means and said liner advancing means in timed relation such that the sealing bars will repeatedly move into and out of contact with the area of the liner being sealed as the liner advancing means advances the liner between the sealing bars, the sealing bars moving in the direction of the path of travel of the liner and at the same effective lineal rate of speed throughout the portion of each orbital cycle during which the sealing bars are in contact with the area of the liner being sealed.

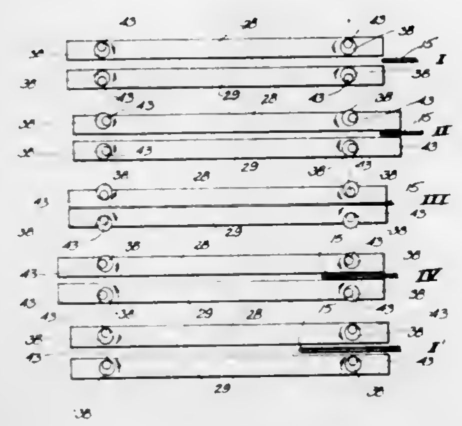

7. A method for heat sealing tubular liners and the like to form a relatively narrow continuous line of seal, which comprises the steps of continuously advancing the liners in a straight-line path of travel between an opposing pair of elongated sealing bars positioned to contact the opposite sides of the liner only in the areas to be sealed, and moving said sealing bars in unison in paths of travel in which the sealing bars repeatedly contact the opposite sides of each advancing liner as it passes between said sealing bars, whereby to incrementally form a continuous line of seal across the area of the liner contacted by the sealing bars.

4,063,984
AROMATIC FLUORO-POLYIMIDE ADHESIVES

John Phillip Critchley, Farnham, England, assignor to The Secretary of State for Defence in Her Britannic Majesty's Government of the United Kingdom of Great Britain and Northern Ireland, London, England
Filed Feb. 27, 1975, Ser. No. 553,831
Claims priority, application United Kingdom, Feb. 28, 1974, 9237/74
The portion of the term of this patent subsequent to Aug. 27, 1991, has been disclaimed.
Int. Cl.² C09J *3/14*
U.S. Cl. 260—45.75 B **7 Claims**

1. An adhesive composition which comprises an aromatic polyimide copolymer having the repeating unit

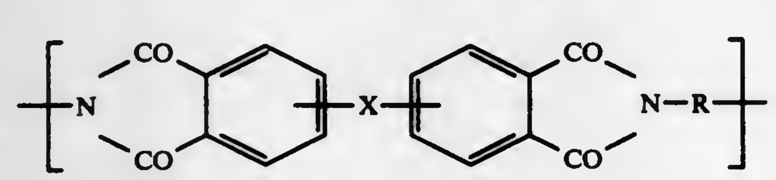

wherein X is $—(CF_2)_n—$ or a mixture of $—(CF_2)_n—$ and $—CO—$ where n is an integer from two to eight inclusive and R represents divalent aromatic groups having the formulae:

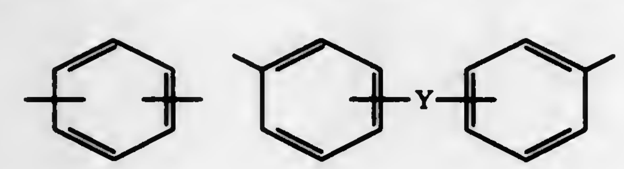

wherein Y is a divalent linking atom or group and is —O—, —S—, —CO—, $—SO_2—$, —CONH—, $—CH_2—$, or $—(CF_2)_m—$ where m is an integer from two to eight inclusive and 10 to 50 moles % of said divalent aromatic groups have at least one direct nuclear substituent selected from organocarbonylamino groups, a carboxylic acid group, and alkoxy-carbonyl groups, and optionally any of the aromatic nuclei may have other nuclear substituents which are non-reactive, together with arsenic thioarsenate in the proportion of trace to 5% by weight based upon the weight of aromatic polyimide copolymer.

4,063,985
HEAT-SEALING STRAPPING TOOL AND TEMPERATURE REGULATOR THEREFOR

Robert B. Kyts, Chicago, Ill., assignor to Interlake, Inc., Chicago, Ill.
Filed June 30, 1976, Ser. No. 701,345
Int. Cl.² B32B *31/00;* **H05B** *1/02*
U.S. Cl. 156—359 **16 Claims**

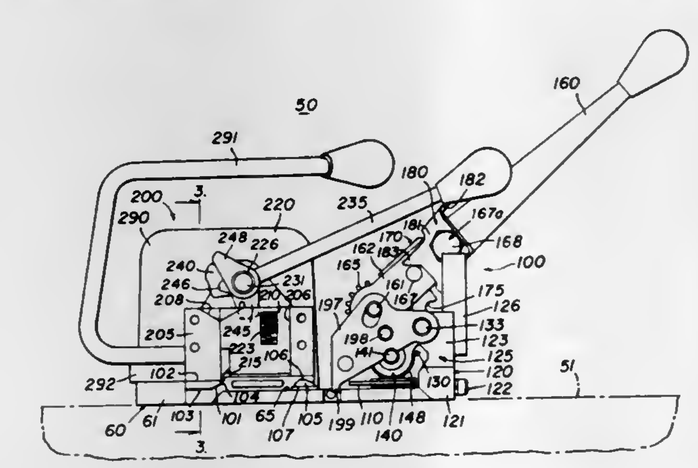

1. Strapping apparatus for securing a length of plastic strap around an object, said apparatus comprising a frame, strap-gripping means mounted on said frame for holding the strap encircled in a loop in a tensioned condition about the object with the leading end of the strap overlapping the supply portion thereof, an electric heating element disposed adjacent to the overlapping strap portions and adapted to be connected across an associated source of electric power for effecting melting of the facing overlapping portions of the strap, reference heating means adapted to be connected in parallel with said heating element for being heated at a rate such that the temperature of said reference heating means is proportional to the temperature of said heating element, and temperature-responsive switch means connected in series between the associated source and the parallel combination of said reference heating means and said heating element and in heat-transfer proximity to said reference heating means such that said switch means is controlled substantially solely by the temperature of said reference heating means, said switch means having a normal closed condition for energizing said heating element and said reference heating means and an open condition for de-energizing said heating element and said reference heating means, said switch means being responsive to the heating of said reference heating means to a reference temperature proportional to a predetermined temperature of said heating element for switching to the open condition thereof, said switch means being responsive to the cooling of said reference heating means below said reference temperature for switching to the closed condition thereof, and pressure means carried by said frame and movable for pressing together the melted overlapping portions of the strap to effect a joint therebetween, whereby there is provided uniform heating of the overlapping portions of the strap and the formation of a uniform joint therebetween independent of variations in the voltage of the associated source.

4,063,986
PORTABLE TIRE PATCH HOLDING CLAMP AND METHOD

Bill W. Eaton, Goodfield, and Donald G. Boundy, E. Peoria, both of Ill., assignors to Caterpillar Tractor Co., Peoria, Ill.
Filed July 15, 1976, Ser. No. 705,495
Int. Cl.² B29H *5/16*
U.S. Cl. 156—394 **5 Claims**

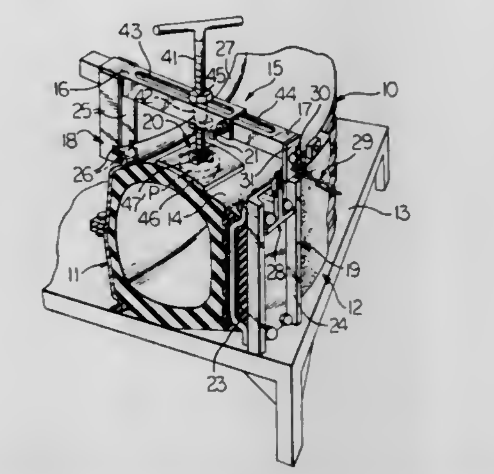

1. A portable tire sidewall clamp adapted to apply a patch to a damaged sidewall of a tire mounted on a rim, wherein the tire rim includes an edge or projection thereon, comprising

a rigid beam of a length suitable for spanning the width of a sidewall of said tire,
first and second coupling means mounted on opposite ends of said beam for positioning said beam in spaced relationship from a sidewall of said tire, wherein said first coupling means comprises at least one rigid arm adapted to couple said beam to the rim edge of said tire, said arm having a slot formed therein adapted to engage said edge, and
pressurizing means intermediate the ends of said beam and adjustably mounted thereon for reacting against said beam for holding and applying pressure to a patch.

4,063,987
FORMING APPARATUS FOR A BREAKER LAYER TO BE USED IN A RADIAL TIRE

Nobuhiko Irie, and Hideaki Katayama, both of Nagasaki, Japan, assignors to Mitsubishi Jukogyo Kabushiki Kaisha, Tokyo, Japan
Filed Mar. 19, 1976, Ser. No. 668,747
Claims priority, application Japan, Mar. 31, 1975, 50-37786
Int. Cl.² B29H *17/28*
U.S. Cl. 156—417 **3 Claims**

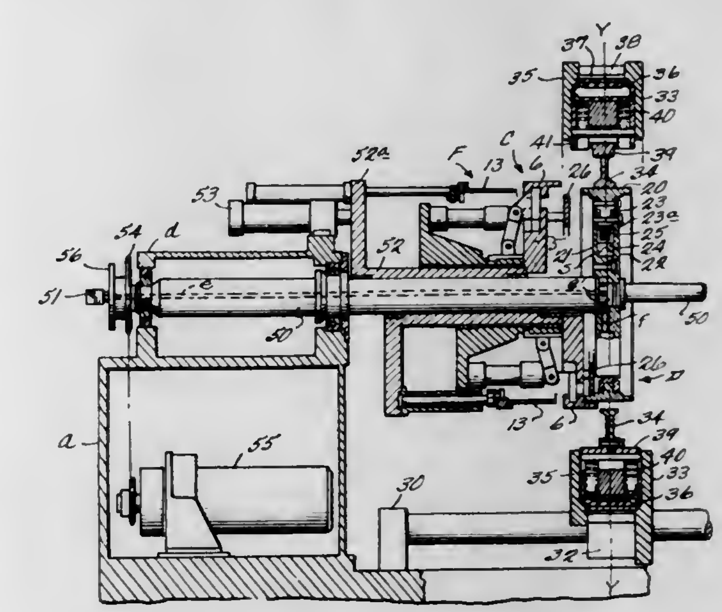

1. Forming apparatus for a radial tire breaker layer, comprising:

a drum device, said drum device including a plurality of

angularly adjacent segments, each segment having means collectively providing a generally cylindrical radially outer surface that is approximately equal in width to the width of the breaker layer that is to be formed;

a press contact device, said press contact device including a plurality of angularly adjacent segments, each segment having means collectively providing a generally cylindrical radially inner surface;

means for radially outwardly expanding said drum device to increase the diameter of said radially outer surface, and for permitting the expanded drum device to contract;

means for radially inwardly contracting said press contact device to decrease the diameter of said radially inner surface, and for permitting the contracted drum device to expand;

means for axially displacing said press contact device between a first position wherein said radially inner surface is axially displaced from and does not surround said radially outer surface, and a second position wherein said radially inner surface circumferentially surrounds said radially outer surface;

first and second breaker material folding-wrapping devices symmetrically, coaxially disposed adjacent respective axially opposite ends of said drum device, each breaker material folding-wrapping device including a plurality of angularly adjacent segments, the segments of each said breaker material folding-wrapping device collectively having means providing a generally cylindrical radially outer surface, a coaxially annular axially inner end surface and a radially inwardly, axially inwardly facing generally L-shaped shoulder;

means for moving the first and second breaker material folding-wrapping devices each axially and radially among a first condition wherein, when the drum device and press contact device are in the respective first positions thereof, the respective folding-wrapping device radially outer surface is generally no larger radially than the radially outer surface of said drum device and is displaced axially therefrom,

a second condition wherein when the drum device and press contact device are in the respective second positions thereof, the respective folding-wrapping device is disposed closely adjacent a respective end of the drum device with the respective shoulder thereof disposed radially outwardly of said radially outer surface of said drum device, and

a third condition wherein at least three layers of breaker material are squeezed between the respective shoulder and said radially outer surface of said drum device at the respective end of said drum device;

means for rotating said drum device about the longitudinal axis thereof; and

means for maintaining the drum in said second position.

4,063,988

MACHINE AND METHOD FOR FORMING CONTINUOUS TUBING

Alcide W. Choiniere, Abbeville; Thomas A. Kutnyak, Greenwood, and George T. Dunn, Abbeville, all of S.C., assignors to Automation Industries, Inc., Los Angeles, Calif.

Filed May 12, 1976, Ser. No. 685,493

Int. Cl.² B65H *81/00*

U.S. Cl. 156—429 **6 Claims**

1. In a machine for forming a continuous tube from a strip of flexible material having a cross sectional configuration including cooperable external edge interlocking portions when helically wound, the combination of:

a frame means;

a pair of spaced askew related rollers mounted on said frame means and positioned to define an inner cylindrical surface of the tube to be formed by helically winding the strip about said rollers;

at least one of said rollers having axially spaced outwardly extending means to partially receive said strip therebetween portions;

means for rotating said rollers for helically winding said strip thereabout to interlock said edge interlocking portions and for progressively forming said tube;

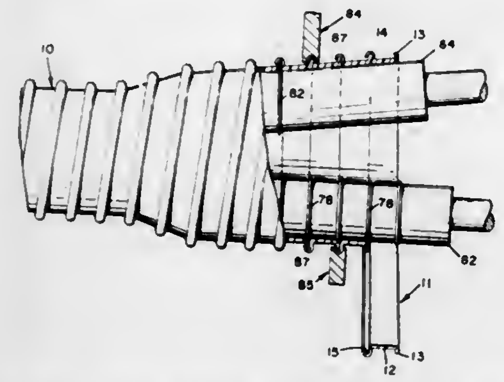

means on said frame means for adjusting the askew relationship of said rollers; and

means on said frame means and means at ends of said rollers for adjusting the spacing between said rollers to provide for the forming of continuous tubing of different diameter.

4,063,989

LABELING MACHINE FEED APPARATUS

Donald E. Murphy, Haddonfield, and Steven J. Roby, Medford, both of N.J., assignors to Campbell Soup Company, Camden, N.J.

Continuation-in-part of Ser. No. 606,291, Aug. 20, 1975, abandoned. This application Dec. 16, 1976, Ser. No. 751,615

Int. Cl.² B65C *9/04, 9/08;* B65H *1/30*

U.S. Cl. 156—453 **6 Claims**

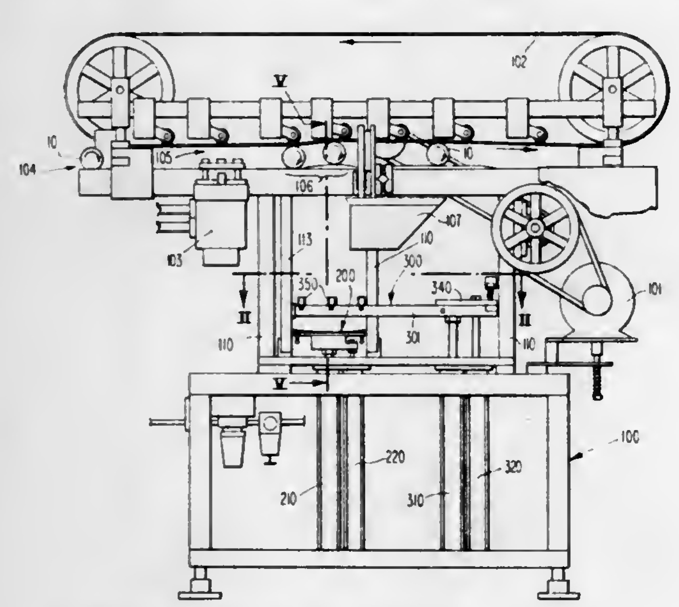

2. A labeling machine comprising:

a. a frame;

b. a conveyor operably associated with the frame for transporting items to be labeled through the labeling machine;

c. adhesive applying means operably associated with the conveyor for applying adhesive to said items to be labeled;

d. a pack of labels;

e. a primary table movably mounted to said frame and normally disposed in feeding relation to said pack of labels for supplying and affixing said labels to said items to be labeled after said items to be labeled have passed through said adhesive applying means.

f. a secondary table operably associated with said primary table movably mounted to said frame and normally disposed out of feeding relation to said pack of labels comprising retractable fingers for engaging, retaining and supplying said pack of labels contained on said primary table when said primary table is disposed out of feeding relation with said pack of said labels;

g. automatic retraction and extension means for moving the fingers of said secondary table to allow said fingers to support said pack of said labels when said primary table is disposed out of feeding relation with said pack of said labels and to automatically remove said fingers out of engagement with said pack of said labels when said primary table is moved into feeding relation with said pack of said labels and said secondary table is lowered out of said feeding relation with said pack of said labels; and

h. fluid drive means to raise and lower both said primary and secondary tables into and out of feeding relation with said pack of said labels as required during the operation of said labeling machine.

4,063,990

DEVICE FOR THE WELDING OF AN INJECTION-MOLDED SPIGOT IN A THIN-WALL FLUID VESSEL

Dieter Volz, Morsch; Kurt Buchscheidt, Ettlingen, Baden, and Reiner Rech, Reichenbach, all of Germany, assignors to Elbatainer GmbH, Ettlingen, Baden, Germany

Filed Sept. 22, 1976, Ser. No. 725,480

Claims priority, application Germany, Sept. 26, 1975, 2542969

Int. Cl.² B23K *19/04;* B29C *27/08*

U.S. Cl. 156—580.2 **5 Claims**

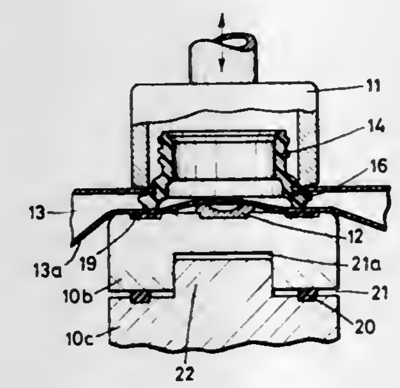

1. A device for the ultrasonic welding of a tubular fitting having an annular flange in an opening of a thin-wall synthetic resin foil container which comprises:

an axially displaceable ultrasonic welding head having an annular face alignable with said flange for ultrasonically welding the foil of said container around said opening receiving said fitting; and

an anvil supporting another wall of said container against said fitting and supporting said fitting against said ultrasonic welding head, said anvil, comprising an upper anvil member and a lower anvil member, said upper anvil member having an upper surface confronting said head and formed in axial alignment with said head with a protuberance holding said other wall away from said surface, said surface being provided with an annular groove receiving a first rubber ring registering with said annular face of said head and supporting said flange of said fitting, said lower member having a surface juxtaposed with said upper member and provided with an annular recess receiving a second rubber ring, said second rubber ring projecting above the surface of said lower member, said lower member and said upper member being provided with mating cylindrical formations for preventing tilting of the upper member relative to the lower member, said second rubber ring maintaining a gap between said members, the elasticity of said first rubber ring being greater than the elasticity of the foil forming said container, the elasticity of said second rubber ring being greater than that of the foil constituting said container but less than that of said first rubber ring.

4,063,991

METHOD OF INCREASING VOLTAGE WITHSTANDING CAPABILITY OF VACUUM INTERRUPTERS

George A. Farrall; William A. Gilhooley, both of Schenectady, and Frank G. Hudda, Latham, all of N.Y., assignors to General Electric Company, Schenectady, N.Y.

Continuation-in-part of Ser. No. 648,669, Jan. 13, 1976, abandoned. This application Jan. 21, 1977, Ser. No. 761,461

Int. Cl.² H01H *9/30*

U.S. Cl. 156—645 **6 Claims**

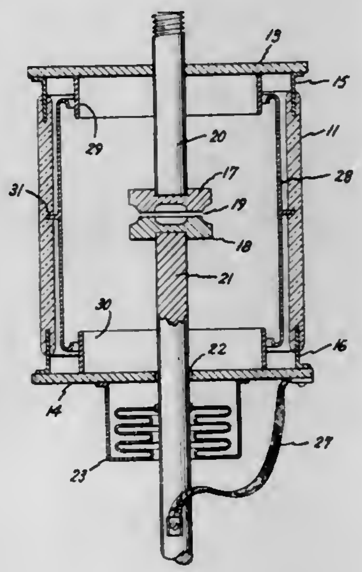

1. In the method of fabricating a vacuum interrupter, said interrupter including a glass envelope and a metallic member cast into said envelope, the method of increasing the voltage withstanding capability of said interrupter comprising the steps of: blasting the interior of said envelope with gas-propelled grit; and etching the interior of said envelope, including said metallic member, so as to remove loose glass particles and glass adhering to said member.

4,063,992

EDGE ETCH METHOD FOR PRODUCING NARROW OPENINGS TO THE SURFACE OF MATERIALS

Harold H. Hosack, Cupertino, Calif., assignor to Fairchild Camera and Instrument Corporation, Mountain View, Calif.

Continuation-in-part of Ser. No. 581,389, May 27, 1975, abandoned. This application Oct. 6, 1975, Ser. No. 619,735

Int. Cl.² H01L *21/306*

U.S. Cl. 156—653 **2 Claims**

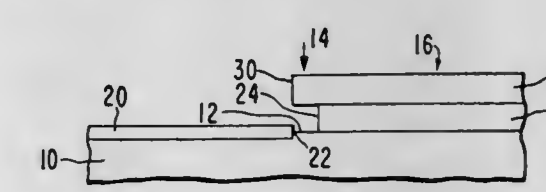

1. A planar process for producing a charge-coupled device of the type having a single level of electrodes separated from one another by narrow gaps comprising the steps of:

a. forming an electrically insulating layer on a substantially planar surface of a semiconductor substrate;

b. forming an electrically conductive layer on the upper surface of said electrically insulating layer;

c. forming a plurality of narrow interelectrode gaps in said electrically conductive layer, each interelectrode gap being formed by a process comprising the steps of;

i. forming on a portion of said electrically conductive layer an etchable mask having a first narrow-opening-forming lateral edge disposed along a selected edge of the to-be-formed interelectrode gap;

ii. forming a protective layer of a material possessing a set of etch characteristics different from etch characteristics of said electrically conductive layer on the adjacent exposed

surface of said electrically conductive layer, said protective layer being formed at a thickness substantially less than the thickness of said etchable mask and with a second narrow-opening-forming lateral edge contiguous to and juxtaposed said first narrow-opening-forming lateral edge;

iii. etching said first narrow-opening-forming lateral edge on said mask to expose an unprotected portion of said electrically conductive layer to produce a narrow opening to the surface of said electrically conductive layer; and,

iv. etching said electrically conductive layer through said narrow opening and down to said electrically insulating layer to thereby form one of said narrow interelectrode gaps.

4,063,993

METHOD OF MAKING GANG BONDING INTERCONNECT TAPE FOR SEMICONDUCTIVE DEVICES

Carmen D. Burns, San Jose, Calif., assignor to National Semiconductor Corporation, Santa Clara, Calif.

Filed July 7, 1975, Ser. No. 593,474

Int. Cl.² H05K *1/00*

U.S. Cl. 156—659 **11 Claims**

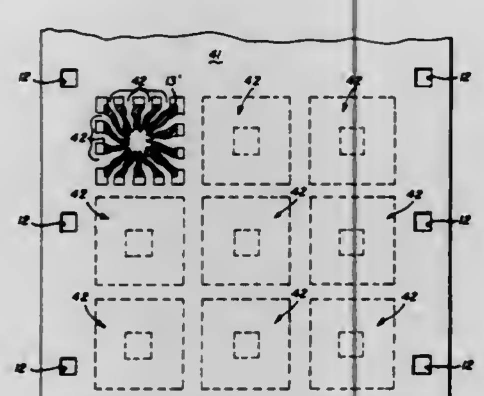

1. In a method for fabrication of a gang bonding interconnect tape for interconnecting a first pattern of leads and a second pattern of leads, such interconnect tape having a series of metallic interconnectlead patterns thereon, individual ones of said lead patterns including a plurality of ribbon-shaped metallic leads extending outwardly from an inner central portion of said pattern to an outer region of said pattern and including an individual electrically insulative support structure interconnecting a plurality of said ribbon-shaped metallic leads in a region of said pattern intermediate said outer region thereof and said inner central region thereof, the steps of:

depositing a series of said individual electrically insulative support structures onto said metallic tape, there being at least one of said individual electrically insulative support structures for individual ones of said interconnect lead patterns to be formed in said metallic tape.

4,063,994

PROCESS FOR PRODUCTION OF POWDERED TEA PRODUCT

Rupert J. Gasser, Old Greenwich, Conn., and James G. Franklin, Union County, Ohio, assignors to Societe d'Assistance Technique pour Produits Nestle S.A., Lausanne, Switzerland

Continuation of Ser. No. 516,354, Oct. 21, 1974, Pat. No. 3,976,804. This application Apr. 12, 1976, Ser. No. 676,348

The portion of the term of this patent subsequent to Aug. 24, 1993, has been disclaimed.

Int. Cl.² A23F *3/00*

U.S. Cl. 159—49 **8 Claims**

1. A process for dehydrating an aqueous extract of tea leaves having a concentration of from 40 to 55% by weight of solids comprising applying a film of said extract in a thickness of between 0.007 and 0.025 centimeters on the external surface of a rotating drum, maintaining the internal temperature of said drum in a range of from 95° to 125° C, evaporating water from said film under a condition of vacuum of from 10 to 15 Tor. for a residence time of from 10 to 40 seconds until the total moisture content of the extract is in the range between 2% to 4%, and then subjecting the dried film to a shearing force to remove the dried extract from the surface of said drum as flakes having an apparent density of less than 12 grams per 100 cc.

4,063,995

FIBROUS WEBS WITH IMPROVED BONDER AND CREPING ADHESIVE

Stephen Richard Grossman, Maple Shade, N.J., assignor to Scott Paper Company, Philadelphia, Pa.

Continuation-in-part of Ser. No. 626,334, Oct. 28, 1975, abandoned, which is a continuation-in-part of Ser. No. 340,760, March 13, 1973, abandoned. This application Oct. 26, 1976, Ser. No. 735,899

Int. Cl.² B31F *1/12*

U.S. Cl. 162—112 **22 Claims**

1. In the process of imparting strength, softness and bulkiness to water dispersible fibrous webs by applying a bonder and adhesive composition to the formed web and creping the web, the improvement which comprises employing as the bonder and adhesive composition a water based composition having a solids content of from about 10% to about 40% and an initial modulus for a film of the solids of less than 1.75×10^8 dynes/cm², said solids content and modulus being obtained by admixing the following components:

1. from 8% to 40% of a water emulsion of a softening compound suitable for use as a fiber bonder whose solid film has an initial modulus of less than 2×10^7 dynes/cm²;
2. from 25% to 60% of a water dispersibility imparting emulsion whose solid film has an initial modulus of from 3×10^7 to 1×10^8 dynes/cm²;
3. from 10% to 37% of a blocking supressant having a glass transition temperature of from about 0° C to about +50° C; and
4. from 5% to 12% of a water soluble polymer suitable for use as a fiber bonder and having a viscosity of at least 100 centipoise for an 8% by weight water solution of the polymer.

4,063,996

WATER REMOVAL FROM FIBERBOARD

George R. Adams, Lancaster, and William T. Meisenbach, Columbia, both of Pa., assignors to Armstrong Cork Company, Lancaster, Pa.

Continuation of Ser. No. 609,946, Sept. 3, 1975, abandoned. This application Dec. 20, 1976, Ser. No. 752,437

Int. Cl.² D21F *1/00*

U.S. Cl. 162—210 **3 Claims**

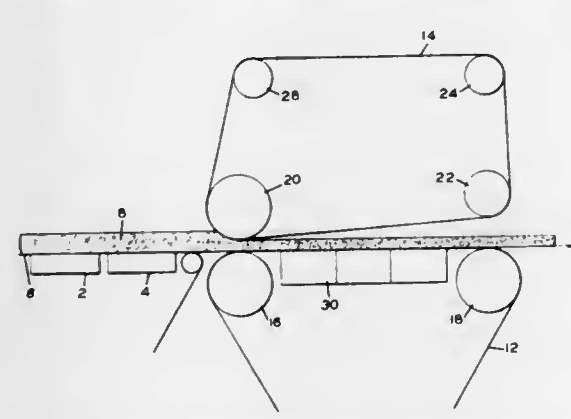

1. In a process for producing a fiberboard structure by a water laid process characterized in that the fiberboard has two parallel surfaces, the steps of forming the fiberboard comprises:

a. forming an aqueous slurry of at least one fibrous material,

b. felting a fibrous board of the slurry on a conventional water laid forming machine,

c. partially dewatering the fibrous board by drainage and/or a first vacuum action to form a sheet of approximately 1.5 inches thickness,

d. the improvement comprising consolidating the board by a pressure operation to further dewater the product and to reduce its thickness about one half and decrease its porosity due to a 40 to 120% densification, said consolidated board having a density of less than 1 pound per board foot and having a wet strength which makes the board non-self-supporting,

e. then further subjecting the fibrous board to a high level vacuum action after the consolidation step to further dewater the board, said high level vacuum action being greater than the vacuum action of the above-said first vacuum action and this further high level vacuum action dewatering the board until it now has sufficient wet strength to support itself.

4,063,997

HYDRAULIC HEADBOX AND A GAS ENCLOSURE COMMUNICATING THEREWITH

Alvi Kirjavainen, and Jouni Koskimies, both of Jyvaskyla, Finland, assignors to Valmet Oy, Finland

Filed Feb. 19, 1976, Ser. No. 659,238

Claims priority, application Finland, Feb. 25, 1975, 750541

Int. Cl.² D21F *1/02*

U.S. Cl. 162—340 **12 Claims**

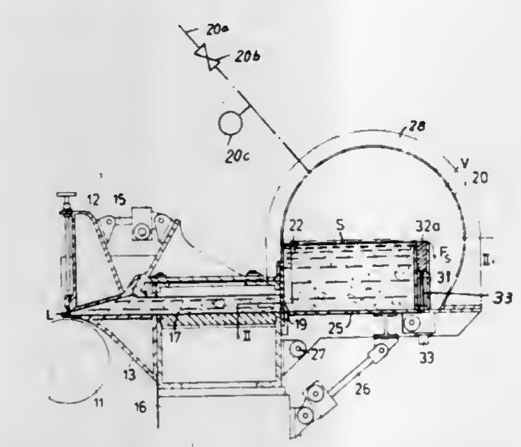

1. For use in a paper machine, enclosure means for containing a gas under pressure, and a hydraulic headbox comprising a slice, conducting means for conducting a pulp stock suspension to said slice, and distributor means for receiving the pulp stock suspension and distributing the same as uniformly as possible to said conducting means to be conducted thereby to said slice, said distributor means having a bottom wall situated directly beneath and engaged by the stock suspension received by said distributor means, said distributor means of said hydraulic headbox and said enclosure means each having hollow interior portions with said pulp stock suspension being situated in said hollow interior portion of said distributor means on said bottom wall thereof while said gas under pressure is situated in said hollow interior portion of said enclosure means, and both of said hollow interior portions communicating with each other so that the pulp stock suspension on is acted upon by the gas under pressure for the purpose of damping pressure variations in the stock suspension, said distributor means providing for said suspension a relatively large free surface area exposed to the gas in the hollow interior portion of said enclosure means so that the latter gas forms a gas cushion acting against the free surface of said suspension, said slice and said conducting means having a given dimension extending transversely of the direction of flow of the suspension toward said slice, and said distributor means having transversely of said direction of flow a length substantially equal to said dimension, and said distributor means providing for said suspension at said free surface thereof a dimension transversely of said direction of flow also equal to the length of said distributor means, said distributor means having a front wall through which said distributor means communicates with said conducting means, a rear wall situated rearwardly of said front wall, and said bottom wall extending between said front and rear walls, said distributor means being open between said front and rear wall and above said bottom wall and containing the stock suspension between said front and rear walls and above said bottom wall so that said stock suspension has at its free surface which is acted upon by the gas cushion an area substantially equal to that of said bottom wall of said distributor means.

4,063,998

FOURDRINIER FABRIC HAVING CONTACTING LONGITUDINAL THREADS

Heinz W. Henke, Ernst Reuter Str. 4, Dueren, Germany (D-5160)

Filed July 2, 1976, Ser. No. 702,140

Claims priority, application Germany, July 5, 1975, 2530110

Int. Cl.² D21F *1/10*

U.S. Cl. 162—348 **5 Claims**

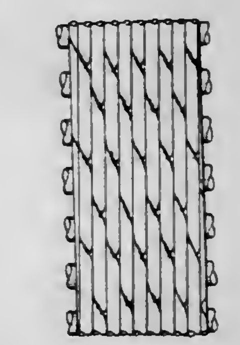

1. A dehydration element for the fourdrinier part of paper making machines has a paper side and a machine side and comprises longitudinal threads bound to woof threads with said longitudinal threads being closely spaced together so that adjacent ones of said longitudinal threads contact each other to provide a closed mesh fabric with fine channels therethrough defined by said longitudinal and woof threads, said fabric being an unevenly bound twill-weave with the paper side of the fabric being unifilarly bound.

4,063,999

NUCLEAR FUEL STORAGE ARRANGEMENT

Elman E. Wade, Ruffsdale, Pa., assignor to Westinghouse Electric Corporation, Pittsburgh, Pa.

Filed Jan. 28, 1976, Ser. No. 653,176

Int. Cl.² G21C *19/00, 19/20, 3/30;* **G21F** *5/00*

U.S. Cl. 176—28 **12 Claims**

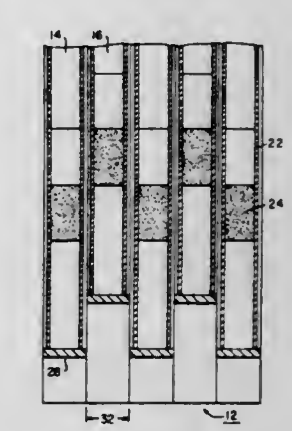

1. A storage arrangement for elongated nuclear reactor fuel assemblies, each of said elongated fuel assemblies having an active section along its longitudinal axis wherein fuel is located and an inactive section along its longitudinal axis wherein fuel is absent, said storage arrangement comprising:

an elongated, cellular structure comprised of a plurality of elongated cells positioned radially adjacent to each other, each of said cells being adapted to receive one of said fuel assemblies, said fuel assemblies being positioned within said cells; and

means for spacing said fuel assemblies within said structure

along the longitudinal axis of said cells, said means for spacing said fuel assemblies positioning said fuel assemblies at predetermined locations along said longitudinal axis such that said active section of each fuel assembly is located adjacent to said inactive section of each fuel assembly radially adjacent to it.

4,064,000
NUCLEAR REACTOR CORE SERVICING APPARATUS
Christo Andrea, Windsor Locks, Conn., assignor to Combustion Engineering, Inc., Windsor, Conn.
Filed Sept. 29, 1975, Ser. No. 617,342
Int. Cl.² G21C *19/20, 7/08;* **B66C** *17/08*
U.S. Cl. 176—30 **11 Claims**

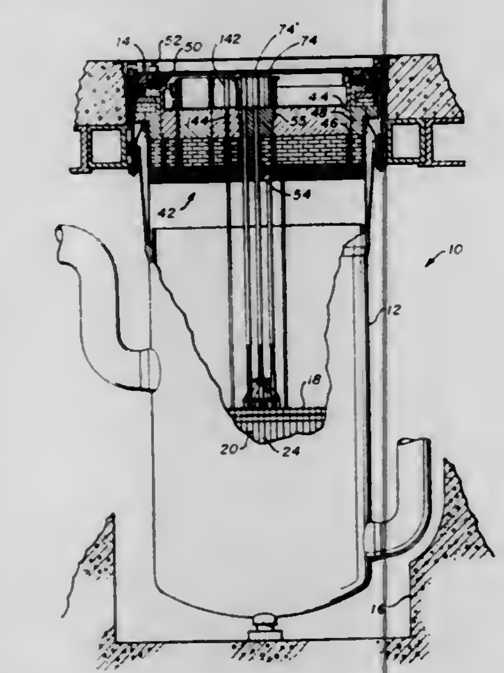

1. An improved core servicing apparatus for a nuclear reactor having a reactor vessel, a vessel head having a head penetration therethrough, a removable plug adapted to fit in said head penetration, and a nuclear core of the type having an array of elongated assemblies, the improvement comprising: a plurality of support columns suspended from said plug extending downward towards said nuclear core; rigid support means fixedly carried by each of said support columns and extending laterally therefrom; a plurality of servicing means for each of said support columns for servicing a plurality of said assemblies, each of said plurality of servicing means for each of said support columns being fixedly supported in a fixed array from said rigid support means; and means for rotating said rigid support means and said servicing means of each of said support columns around said support column axis between condensed and expanded positions, said rigid support means and said servicing means when in said condensed position lying completely within the coextensive boundaries of said removable plug and some of said rigid suport means and said servicing means when in said expanded position lying without the coextensive boundaries of said removable plug.

4,064,001
HOT LEG RELIEF SYSTEM
Richard Joseph Duncan, Niantic, Conn., assignor to Combustion Engineering, Inc., Windsor, Conn.
Filed May 1, 1975, Ser. No. 573,665
Int. Cl.² G21C *9/00*
U.S. Cl. 176—38 **4 Claims**

1. An improved pressurized water reactor system having a water cooled reactor core contained within a reactor vessel, means for delivering the water coolant to the reactor core including a coolant pump and means for removing the water coolant from the reactor core, the improvement comprising:

a. differential pressure responsive means external to said reactor vessel including a valve connected between said water coolant delivering means downstream of said coolant pump and said water coolant removing means for relieving excess pressure in said water coolant removing

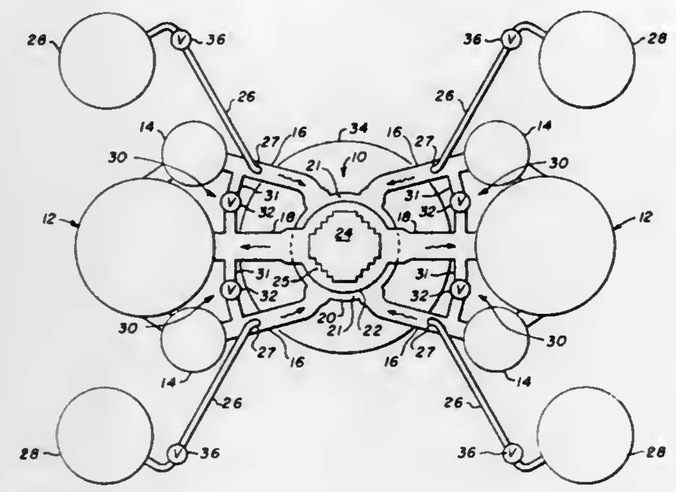

means when the pressure in said water coolant removing means exceeds the pressure downstream of said coolant pump in said water collant delivering means.

4,064,002
EMERGENCY CORE COOLING SYSTEM FOR A NUCLEAR REACTOR
Walter E. Desmarchais, Monroeville; Leonard R. Katz, and Bernard L. Silverblatt, both of Pittsburgh, all of Pa., assignors to Westinghouse Electric Corporation, Pittsburgh, Pa.
Continuation of Ser. No. 384,322, July 31, 1973, abandoned. This application May 30, 1975, Ser. No. 582,570
Int. Cl.² G21C *9/00, 15/00*
U.S. Cl. 176—38 **1 Claim**

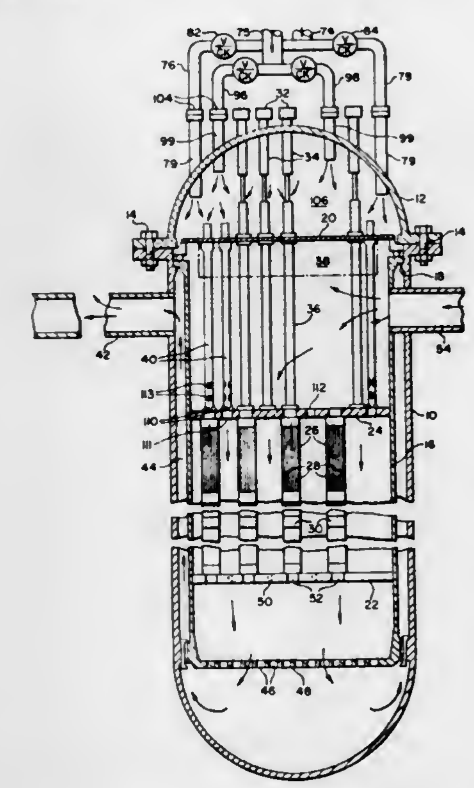

1. An emergency core cooling system for a nuclear reactor comprising a pressure vessel hermetically sealed by a closure head, a reactor core in the pressure vessel and an inlet and outlet for circulating coolant through the reactor core;

emergency coolant means including at least one accumulator having a pressurized neutron absorber material therein;

an outlet on said accumulator connected with the closure head for discharging said absorber material into the pressure vessel;

flow restricting means between said accumulator and closure head which permits flow of absorber material only from the accumulator toward the reactor, said flow restricting means being held closed by the pressure of coolant in said reactor, the arrangement being such that when the reactor coolant pressure drops below the accumulator pressure, neutron absorber material flows from the accumulator into the pressure vessel; and

means in said pressure vessel for conducting the neutron absorber material from the accumulator to the top of said core for distribution downwardly therethrough for carrying away heat generated in the core;

said conducting means comprising piping supported by the closure head, said piping being arranged to extend from the accumulator outlet to a plenum chamber under the closure head, thereby providing an avenue for the discharge of absorber material from the accumulator into the plenum chamber;

means communicating with the plenum chamber and top of said core for conducting the absorber material to the core;

said piping extending from the accumulator outlet further being connected to downcomer tubing supported in the pressure vessel and having openings which discharge said absorber material directly on to the reactor core, thereby permitting it to flow in and between fuel assemblies in the core;

a connector connecting said piping and downcomer tubing, said connector being designed to allow for lateral displacement of the tubing and piping after the closure head is mounted on the pressure vessel;

high and low liquid level sensors in said accumulator;

valve means in said piping connected to the accumulator outlet; and

means connecting said sensors with said valve means in the piping which are operable to close said valves when the absorber material level in the accumulator rises or falls respectively to predetermined levels.

4,064,003
RUPTURE DISC
Robert G. Newton, Pittsburgh, Pa., assignor to The United States of America as represented by the United States Energy Research and Development Administration, Washington, D.C.
Filed Mar. 29, 1976, Ser. No. 671,912
Int. Cl.² G21C *9/00*
U.S. Cl. 176—38 **4 Claims**

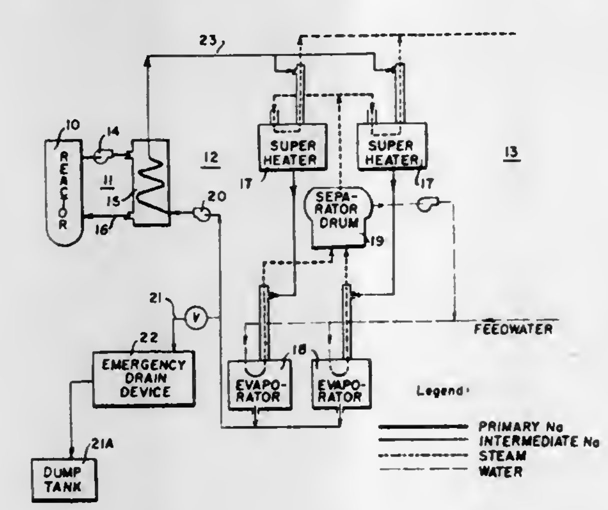

1. In the intermediate heat transport system of a sodium-cooled nuclear reactor incorporating an intermediate sodium-to-sodium heat exchanger, sodium-to-water heat exchangers, a pump and a drain line, the improvement comprising a device for rapidly draining the heat transport system including a body having a cylindrical side wall, a conical bottom and a cover, an outlet line leading to a dump tank penetrating the side wall, said drain line penetrating said body vertically through the apex of the conical bottom and terminating in an enlarged portion within the interior of the body, a diaphragm welded to the end of the drain line and held thereagainst by a clamp ring threaded onto the enlarged portion of the drain line and having a circular groove therein of slightly less diameter than the drain line, a punch having a circular shearing edge thereon of the same diameter as said groove and having sharp projections thereon resting in said groove, said punch having an axial recess in the bottom thereof, a stem connector disposed in said recess fixedly connected to said diaphragm and attached to the punch by a lost motion connection and means for actuating said punch to cut a circular opening in the diaphragm and for withdrawing the punch thereby removing the sheared-out portion of the diaphragm from the opening cut in the diaphragm.

4,064,004
ASSEMBLY MECHANISM FOR NUCLEAR FUEL BUNDLES
John W. Long; Barney S. Flora, and Kenneth L. Ford, all of Richland, Wash., assignors to Exxon Nuclear Company, Inc., Bellevue, Wash.
Filed Feb. 23, 1976, Ser. No. 660,664
Int. Cl.² G21C *3/30*
U.S. Cl. 176—78 **12 Claims**

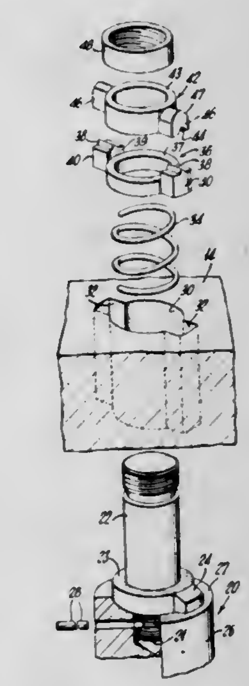

1. A nuclear power reactor fuel bundle comprising:

a. a lower tie plate;

b. a plurality of tie rods each having an upper and a lower end, said lower end of each of said tie rods being fixed to said lower end plate;

c. an upper tie plate having an opening including a radially outward guide slot extending through said upper tie plate;

d. a plate support member at said upper end fixed to each of said tie rods for supporting said upper tie plate;

e. a locking sleeve having a locking lug extending radially outward, said locking sleeve operably fixed to said upper end of each of said tie rods and of a shape to pass through said opening and guide slot in said upper tie plate, said locking sleeve rotatably movable between a securing and unsecuring position such that in said securing position said locking lug engages said upper tie plate and secures said upper tie plate to said tie rod;

f. a retaining sleeve adjacent to said locking sleeve including an annular body and a retaining lug extending radially outward, said retaining sleeve movably attached to said tie rod; and

g. a means for biasing said retaining sleeve in retaining engagement with said locking sleeve.

4,064,005
DEVICE FOR SUPPORTING A NUCLEAR BOILER
Jacques Baujat, Versailles, France, assignor to Commissariat a l'Energie Atomique, Paris, France
Filed May 10, 1976, Ser. No. 684,936
Claims priority, application France, May 12, 1975, 75.14716
Int. Cl.² G21C *13/02*
U.S. Cl. 176—87 **15 Claims**

1. A device for supporting a complete nuclear boiler includ-

ing at least a pressure vessel and one steam generator, wherein said device comprises: a cradle constituted by a plurality of identical half-bridges, the upper surfaces of said half-bridges being coplanar, each half-bridge being constituted by two identical and parallel main beams, each of said half-bridges being carried on a vertical supporting element at one extremity

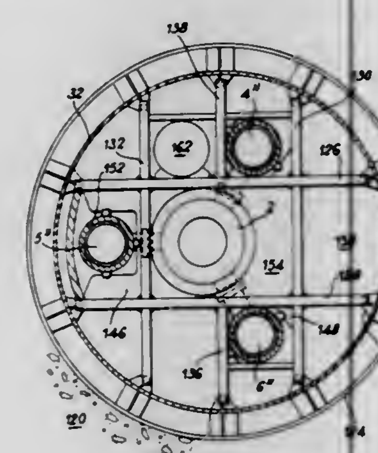

which is constituted by one of the extremities of the beams forming said half-bridge and being rigidly coupled together at the other extremity; and a plurality of structural elements which are rigidly fixed to said beams and are attached to said pressure vessel and said generator to support and suspend said pressure vessel and said generator.

4,064,006
METHOD FOR THE CONTINUOUS MASS IN VITRO SUSPENSION CULTURE OF CELLS
Sam Rose, Eggertsville, N.Y., assignor to Bio-Response, Inc., Wilton, Conn.
Division of Ser. No. 349,330, April 9, 1973, Pat. No. 3,964,467, which is a continuation-in-part of Ser. No. 328,048, Jan. 30, 1973, Pat. No. 3,857,393, which is a division of Ser. No. 136,476, April 22, 1971, Pat. No. 3,179,182. This application Feb. 11, 1975, Ser. No. 549,085
Int. Cl.² C12K *9/00*
U.S. Cl. 195—1.8 **10 Claims**

1. A method for the continuous mass in vitro suspension culture of cells comprising the steps of:
forming a mixture of cells to be cultured and a culture medium;
centrifuging said mixture to separate said cells from said culture medium and to form a thin enlongated layer of cells;
replacing the separated culture medium with fresh culture medium while maintaining said cells in said thin layer;
disturbing said thin layer of cells to disperse them throughout said fresh culture medium;
maintaining said dispersion for a preselected period of time;
centrifuging said dispersion to separate said cells from said fresh culture medium and to form a thin elongated layer of cells;
repeating the immediately preceding four steps, in the order given, a preselected number of times; and
periodically collecting a portion of the cultured cells while said cells are in said dispersion.

4,064,007
PROCESS FOR OBTAINING AN ACTIVE PRODUCT FROM MAMMALIAN MACROPHAGES
Jean Choay, Paris; Paul Trolard, Ivry sur Seine, and Henri Lucien Febvre, Paris, all of France, assignors to Institut National de la Sante et de la Recherche Medicale, Paris, France
Filed Mar. 2, 1976, Ser. No. 663,279
Claims priority, application France, Mar. 3, 1975, 75.06604
Int. Cl.² C12K *9/00;* **A61K** *35/12*
U.S. Cl. 195—1.8 **14 Claims**

1. A process for obtaining from human macrophages, a new product inhibiting the abnormal multiplication of human tumor cells, said process comprising:
isolating macrophages by the in vitro action on human macrophages, swabbed in situ from human cells, of a macrophage activating agent which causes the removal by the macrophages of the other cells present in the swabbed cellular medium;
placing the macrophages thus isolated in a suitable culture medium until the establishment of a continuous line of macrophages;
culturing the macrophages established as a continuous line, in the presence of a macrophage activating agent; and
collecting the supernatant liquid from these cultures, which supernatant contains substances inhibiting the proliferation of the cells having a rapid rate of multiplication.

4,064,008
GELATIN EXTRACTION
Bent Riber Petersen, Copenhagen, Denmark, and John Russel Yates, Hughes, Australia, assignors to Novo Industri A/S, Bagsvaerd, Denmark
Filed July 1, 1976, Ser. No. 701,888
Claims priority, application United Kingdom, July 11, 1975, 29341/75
Int. Cl.² C12B *1/00*
U.S. Cl. 195—6 **12 Claims**

1. A process for conditioning of collagen for gelatin extraction, which comprises treating a suitable collagenous raw material with a solution of proteolytic enzyme at a temperature between 20° and 40° C, in concentration in the treatment solution of between 0.05 and 5 Anson units/1, for between 4 and 72 hours and at a pH between 7 and 13, whereafter the proteolytic enzymatic activity is eliminated.

4,064,009
NOVEL 3-(OXYGENATED ALKYL)-1,9-DIHYDROXY AND 1-HYDROXY-9-KETO DIBENZO[B,D]PYRANS
David S. Fukuda, Brownsburg; Bernard J. Abbott, Greenwood, and Robert A. Archer, Indianapolis, all of Ind., assignors to Eli Lilly and Company, Indianapolis, Ind.
Filed June 9, 1976, Ser. No. 694,512
Int. Cl.² C07B *29/02*
U.S. Cl. 195—51 R **4 Claims**

1. The fermentation process which comprises subjecting as a substrate a compound of the formula

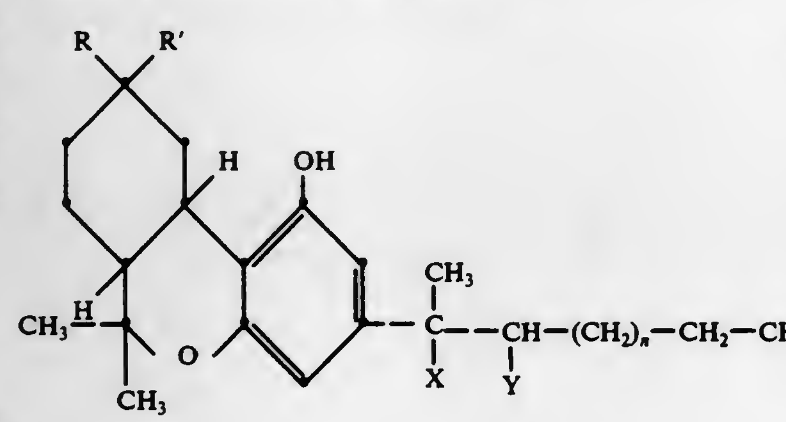

II

wherein X and Y are either both hydrogen or one is hydrogen and the other methyl, wherein n is 1, 2, 3 or 4 and wherein, when taken singly, one of R and R′ is H and the other is OH and when taken together, form the oxygen of a ketone group to the oxygenating activity of a strain of the micro-organism *Bacillus cereus* to produce an oxygenated compound of the formula

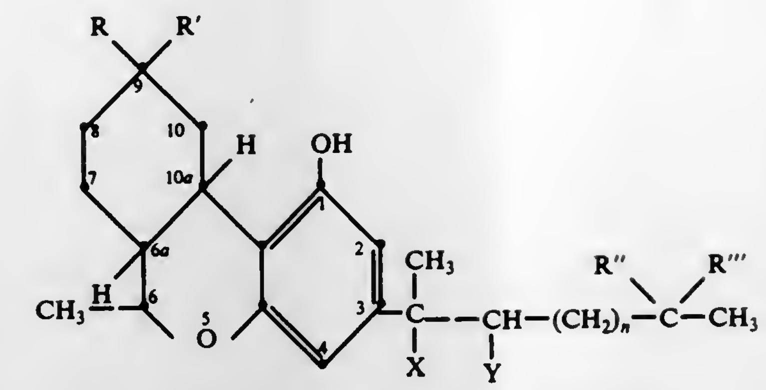

I

wherein X and Y are either both hydrogen or one is hydrogen and the other methyl;
wherein, when taken singly, one of the pair R and R′ and one of the pair R″ and R‴ is H and the other is OH and, when taken together, the pair R and R′ and the pair R″ and R‴ form the oxygen of a ketone group, the pairs R, R′ and R″, R‴ being the same or different; and wherein n is 1, 2, 3, or 4.

4,064,010
PURIFICATION OF URICASE
Harry Wayne Harris, Hamlin; James Robert Schaeffer, Penfield, and Roy Eugene Snoke, Webster, all of N.Y., assignors to Eastman Kodak Company, Rochester, N.Y.
Filed July 21, 1976, Ser. No. 707,458
Int. Cl.² C12D *13/10*
U.S. Cl. 195—62 **14 Claims**

12. A uricase preparation effectively free from catalase activity produced by purifying a uricase preparation obtained by growing *Micrococcus luteus* NRRL B-8166, the purification steps comprising:
precipitating the uricase from a solution of the uricase preparation with ammonium sulfate to obtain an ammonium sulfate pellet;
dissolving the pellet in a buffer solution and applying it to a chromatographic column comprising a cyanogen-bromide activated polysaccharide material having a hydrophobic ligand attached thereto, thereby leaving the uricase on the column;
eluting the uricase from the column using a salt, surfactant, buffer solution to obtain an eluted uricase solution;
applying the eluted uricase solution to a triethylaminoethyl-cellulose chromatographic column, thereby leaving the uricase on the column;
eluting the uricase from the triethylaminoethyl-cellulose column using a salt, buffer solution to obtain a second eluted solution; and
dialyzing the second eluted solution to obtain said uricase preparation.

4,064,011
PROCESS FOR PRODUCING ECORI RESTRICTION ENDONUCLEASE WITH ***E.COLI*** **MUTANTS**
Hubert Mayer, and Horst Schutte, both of Wolfenbuttel, Germany, assignors to Gesellschaft fur Biotechnologische Forschung mbH, Braunschweig-Stockheim, Germany
Filed Mar. 16, 1977, Ser. No. 778,261
Int. Cl.² C12D *13/10*
U.S. Cl. 195—65 **8 Claims**

1. A process of producing ECoRI restriction endonuclease which comprises cultivating *E.coli* SB5, DSM No. 686 in an aqueous nutrient medium therefor and recovering said enzyme from the cultivated cells.

4,064,012
PROCESS FOR PRODUCING ANTIBACTERIAL ANTIBIOTICS AM31α, AM31β, AND AM31γ WITH ***STREPTOVERTICILLIUM NETROPSIS***
Jane Parsons Kirby, New City, and Donald Bruce Borders, Suffern, both of N.Y., assignors to American Cyanamid Company, Stamford, Conn.
Continuation-in-part of Ser. No. 731,165, Oct. 12, 1976, which is a division of Ser. No. 559,998, March 19, 1975, Pat. No. 3,987,029, which is a continuation-in-part of Ser. No. 436,008, Jan. 23, 1974, abandoned. This application Mar. 8, 1977, Ser. No. 775,504
Int. Cl.² C12D *9/14*
U.S. Cl. 195—80 R **1 Claim**

1. A process for the production of a mixture of antibiotics of the formula:

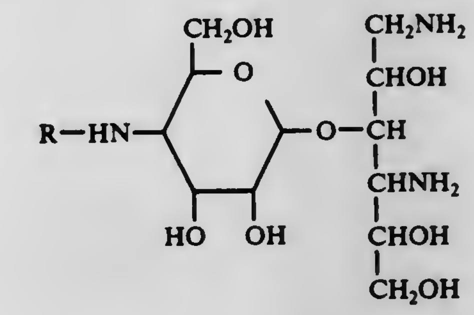

wherein R is hydrogen, acetyl or propionyl which comprises cultivating Streptoverticillium netropsis NRRL 5774 or mutants thereof in an aqueous nutrient medium containing assimilable sources of carbohydrate, nitrogen, and inorganic salts under submerged aerobic conditions until substantial antibacterial activity is imparted to said medium, and then recovering the antibiotic mixture therefrom.

4,064,013
PROCESS FOR PREPARING THIOSTREPTON
Edward Meyers, East Brunswick; William H. Trejo, Princeton; Josip Pluscec, Ewing Township, and William E. Brown, Princeton, all of N.J., assignors to E. R. Squibb & Sons, Inc., Princeton, N.J.
Filed Dec. 6, 1976, Ser. No. 748,244
Int. Cl.² C12D *9/14*
U.S. Cl. 195—80 R **2 Claims**

1. A process for producing the antibiotic thiostrepton which comprises culturing aerobically *Streptomyces laurentii* A.T.C.C. No. 31255 in a culture medium containing carbon and nitrogen sources until thiostrepton is accumulated, and then recovering the thiostrepton from the medium.

4,064,014
ANTIBIOTIC COMPOUNDS MARCELLOMYCIN AND MUSETTAMYCIN
Donald E. Nettleton, Jr., Jordan; James A. Bush, Fayetteville; William T. Bradner, Manlius, and Richard H. Schreiber, Canastota, all of N.Y., assignors to Bristol-Myers Company, New York, N.Y.
Division of Ser. No. 677,480, April 15, 1976, Pat. No. 4,039,736. This application Mar. 23, 1977, Ser. No. 780,561
Int. Cl.² C12D *9/14*
U.S. Cl. 195—96 **2 Claims**

1. A process for producing musettamycin which comprises cultivating Actinosporangium sp. A.T.C.C. 31127 in an aqueous nutrient medium containing assimilable sources of nitrogen and carbon under submerged aerobic conditions until a substantial amount of musettamycin is produced by said organism in said culture medium.
2. A process for producing marcellomycin which comprises cultivating Actinosporangium sp. A.T.C.C. 31127 in an aqueous nutrient medium containing assimilable sources of nitrogen and carbon under submerged aerobic conditions until a sub-

stantial amount of marcellomycin is produced by said organism in said culture medium.

4,064,015
CONTROL OF BIOSYNTHESIS IN SUBMERGED CULTURE

Laszlo K. Nyiri; Gizella M. Töth, both of Bethlehem; Douglass V. Parmenter, Allentown, and Calidas S. Krishnaswami, Whitehall, all of Pa., assignors to New Brunswick Scientific Co., Inc., Edison, N.J.

Filed May 12, 1975, Ser. No. 576,902
Int. Cl.² C12B *1/00*

U.S. Cl. 195—108 **19 Claims**

1. An improvement in the method of operation of a fermentation tank with the objective of producing any desired ratio of weight of ethyl alcohol to weight of cell mass, designated as EA/CM, between a maximum corresponding to the maximum concentration of ethyl alcohol which the cell can tolerate, and essentially zero, said tank being supplied with oxygen, metabolizable carbon, nitrogen and phosphorus, the weights of carbon and nitrogen supplied as compounds thereof being designated as C and N. respectively and the feed ratio of carbon to nitrogen being termed C/N, said fermentation tank being maintained at selected optimum temperature, pressure, pH and dissolved oxygen level, wherein said improvement comprises as a preliminary step:

a. varying the ratio C/N and noting the value of EA/CM corresponding to each value of C/N, thereby establishing a functional relationship between C/N and EA/CM, and as a control step during actual operation,
b. holding said feed ratio C/N at a value appropriate for producing said desired EA/CM ratio.

4,064,016
TRANSFER DEVICE

Walter Vortmann, Garbsen, Germany, assignor to Volkswagenwerk Aktiengesellschaft, Wolfsburg, Germany

Filed Feb. 24, 1977, Ser. No. 771,512
Claims priority, application Germany, Mar. 6, 1976, 2609303
Int. Cl.² B65G *47/90*

U.S. Cl. 198—412 **12 Claims**

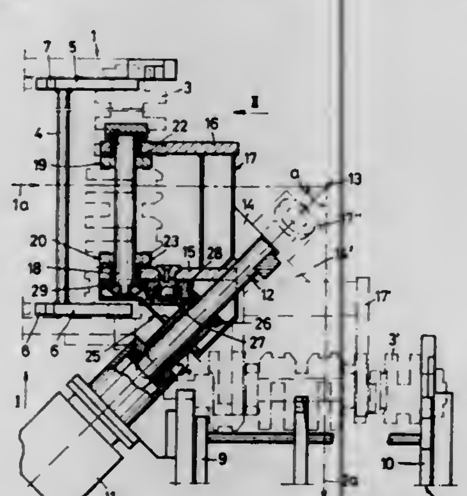

1. A transfer device for transferring articles from the delivery end of a first conveyor to the receiving end of a second conveyor, which conveyors convey articles in two directions which lie in an at least approximately horizontal plane and form with each other an angle other than 180°, the transfer device comprising:

a. a shaft mounted for rotation on a stationary component about an axis which at least approximately bisects said angle;
b. a carrier arm fixedly connected to said shaft and being arranged between the delivery end of the first conveyor and the receiving end of the second conveyor;
c. a pick-up connected to said carrier arm and having a pivotable axle carrying support means adapted to engage the underside of an article which is at the delivery end of the first conveyor; and
d. transmission means interposed between said stationary component and said pivotable axle for maintaining said support means below the article during rotation of said shaft which effects transfer of the article from the delivery end of the first conveyor to the receiving end of the second conveyor, in consequence of which said support means support the article being transferred throughout the entire transfer operation.

4,064,017
METHOD OF OPERATING COKE OVENS

Kurt-Günther Beck; Wolfgang Rohde, both of Essen; Dieter Stalherm, Recklinghausen, and Volker Kolitz, Gelsenkirchen, all of Germany, assignors to Bergwerksverband GmbH, Essen, Germany

Filed July 21, 1975, Ser. No. 597,917
Claims priority, application Germany, July 19, 1974, 2434723
Int. Cl.² C10B *21/10*

U.S. Cl. 201—1 **13 Claims**

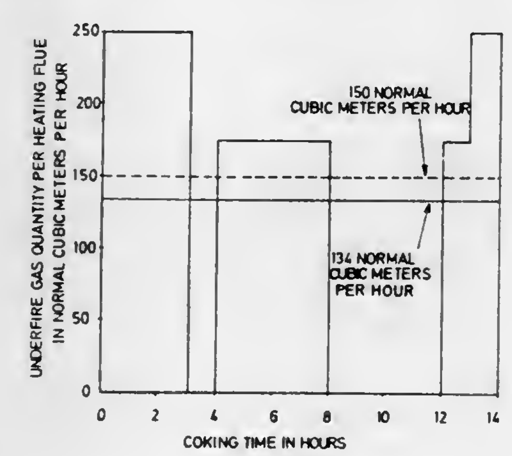

1. A coking method, comprising admitting a cokable substance into a least one coking chamber; supplying to said chamber, during periods in which coking of said substance progresses in response to the supply of heat, a quantity of heat which is sufficient to cause coking of said substance; and shutting off the heat supply to said chamber during periods in which the coking continues without supply of heat; said steps of heat supply and heat shut-off including supplying heat for an initial period and then alternately shutting off the heat supply and resuming the heat supply for at least two alternations of shut-off and heat supply subsequent to the initial heat supply period, the final heat supply of these alternations being the terminal period of the coking operation.

4,064,018
INTERNALLY CIRCULATING FAST FLUIDIZED BED FLASH PYROLYSIS REACTOR

Charles K. Choi, Claremont, Calif., assignor to Occidental Petroleum Corporation, Los Angeles, Calif.

Filed June 25, 1976, Ser. No. 700,000
Int. Cl.² C10B *1/04, 49/16, 49/22;* C10G *1/02*

U.S. Cl. 201—12 **34 Claims**

1. In a process for the pyrolysis of solid carbonaceous materials in which the carbonaceous material is pyrolyzed by heat transferred thereto from a high temperature, particulate solid source of heat to yield as products of pyrolysis a pyrolytic vapor containing hydrocarbons and a particulate carbon containing solid residue, an improved method of achieving pyrolysis comprising the steps of:

a. simultaneously introducing upwardly to the base of an upwardly flowing fast fluidized bed contained within a substantially vertically disposed open duct, said open duct at least partially surrounded by a descending dense fluidized mass of particulate solids including particulate carbon containing solid residue of pyrolysis and spent particulate source of heat, a particulate carbonaceous material contained in a carrier gas which is nondeleteriously reactive with respect to the products of pyrolysis and a particulate source of heat to contact and pyrolyze the carbonaceous material, the introduced quantity of particulate solid source of heat being sufficient to raise the carbonaceous material to a pyrolysis temperature of at least about 600° F to yield as products of pyrolysis pyrolytic vapor and particulate carbon containing solid residue, while simultaneously maintaining a flow of solids from the surrounding dense fluidized mass upwardly along the inner surface of the duct to prevent contact of the carbonaceous material with the inner surface of the duct;

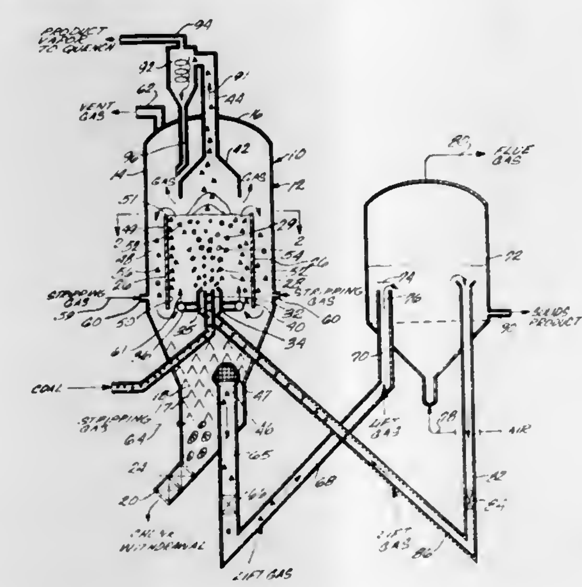

b. discharging (i) at least a portion of the spent particulate source of heat and particulate carbon containing solid residue resulting from pyrolysis over the top end of the open duct to the descending dense fluidized mass of particulate solids and (ii) a stream comprising a gaseous mixture of carrier gas, pyrolytic vapor and entrained particulate solids including spent particulate solid source of heat and carbon containing solid residue from the upper portion of the duct and through an outlet above the fluidized bed;
c. separating the entrained solids from the gaseous mixture in a separation zone; and
d. recovering hydrocarbon values from the gaseous mixture.

4,064,019
CONTINUOUS CONTACT PLATER METHOD

Charles D. Eidschun, Jr., Seminole, Fla., assignor to Dixie Plating, Inc., St. Petersburg, Fla.

Continuation-in-part of Ser. No. 502,536, Sept. 3, 1974, abandoned, and a continuation-in-part of Ser. No. 580,304, May 23, 1975. This application Mar. 15, 1976, Ser. No. 666,618
Int. Cl.² C25D *5/02, 5/06*

U.S. Cl. 204—15 **7 Claims**

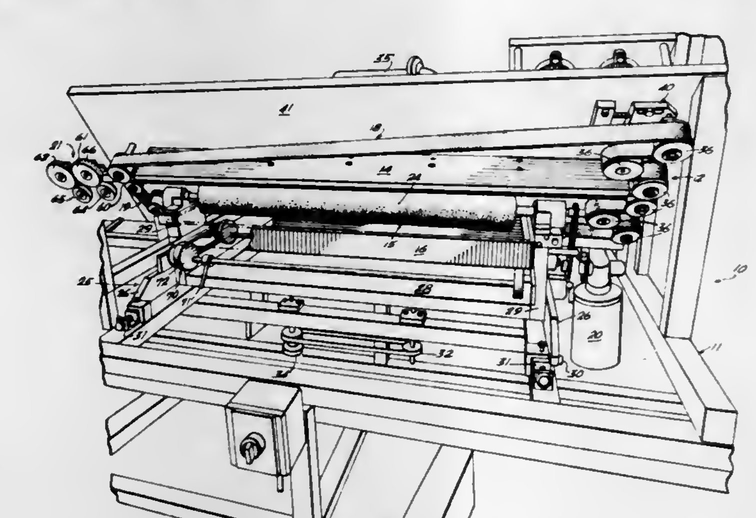

1. A method for a continuous plating of a discreet area on a convex curvilinear surface on a plurality of aligned electronic contacts comprising the steps of:

confining the contact points in close proximate parallel relationship with a fixed axis of travel of the points to be plated,
firmly engaging the same thus oriented contact points by means of opposed pressure belts drivingly engaged to move the thus oriented contact points with their discreet convex curvilinear portions to be plated firmly against a plating member, while cantileveringly extending from the belts,
positioning a fluid retaining sleeve on a roller in anode rotary relationship to the contact point,
rotating the roller to pass a retained plating solution in said sleeve against the contact points on a convex curvilinear tangential point,
electrically energizing the contact points as a cathode and passing the same longitudinally against the rotation of the roller thereby defining a helical path across the roller,
applying a consistent amount of fluid on the roller sleeve and maintaining a bath of fluid on the roller sleeve to constantly wet the same in a controllable electrodeposition quantity,

whereby a contact point can be plated with a metal such as gold in the discreet curvilinear portion intended for electrical contact with another member and without plating the rear portion or other portions of the contact which otherwise have no electrical relationship in a circuit.

4,064,020
PREPARING AN ENVIRONMENTALLY STABLE STAINLESS SURFACE FOR BONDING

Yukimori Moji, Seattle, Wash., assignor to The Boeing Company, Seattle, Wash.

Filed Dec. 22, 1975, Ser. No. 643,281
Int. Cl.² C25D *11/34, 11/38*

U.S. Cl. 204—38 E **17 Claims**

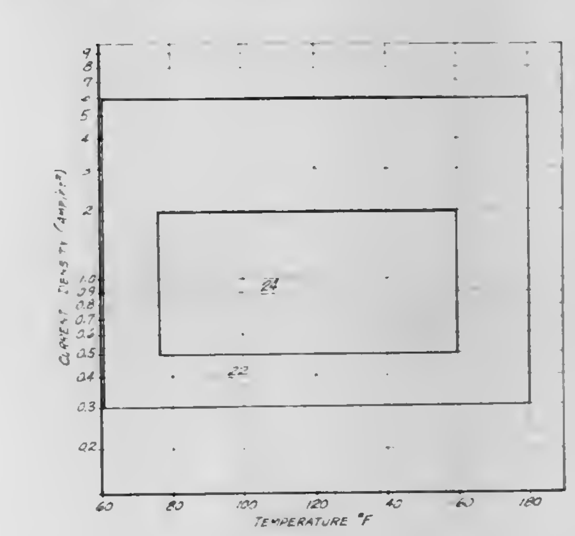

11. A stainless steel article having an adhesive coated surface, said surface prepared for the adhesive by anodizing in an electrolytic aqueous bath from 75° F to 160° F for 5 to 30 minutes at a voltage potential for imparting about 0.3 to 6 amperesfoot², said bath consisting of 400–600 grams per liter of sulfuric acid or 300–400 grams per liter of sulfuric acid and 30–40 grams per liter of CrO_3.

4,064,021
METHOD OF IMPROVING ELECTROLYTE CIRCULATION
Vittorio de Nora, Nassau, Bahamas, and Oronzio de Nora, Milan, Italy, assignors to Diamond Shamrock Technologies S.A., Geneva, Switzerland
Division of Ser. No. 485,844, July 5, 1974, Pat. No. 3,956,097. This application Feb. 2, 1976, Ser. No. 654,396
Int. Cl.² C25B *1/16, 1/26*
U.S. Cl. 204—98 4 Claims

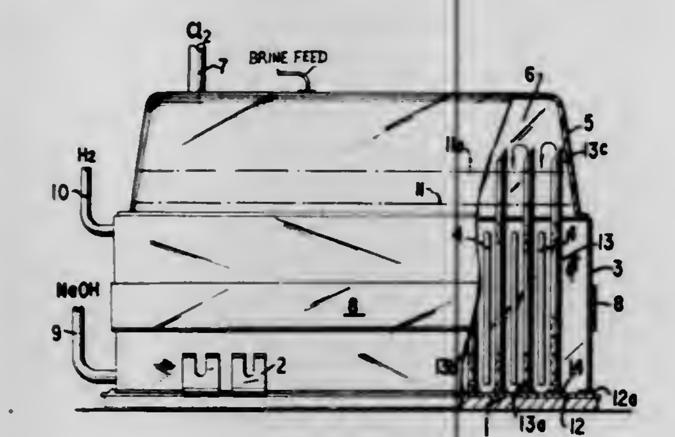

1. The method of providing circulation of the anolyte in an electrolysis cell having an electrode gap formed between dimensionally stable tubular vertical anodes provided with perforations throughout the section of their height in the electrode gap facing the cathodes and an imperforate portion near the top of the anodes and dimensionally stable vertical cathodes, which comprises applying an electrically conductive electrocatalytic coating on the inside of the said tubular anodes and using the gas lifting effect of gas generated on the inside of said tubular anodes to circulate anolyte through said imperforate portion of the anodes and into the top level of the anolyte.

4,064,022
METHOD OF RECOVERING METALS FROM SLUDGES
Motoo Kawasaki, Hirakata; Shozo Mizumoto, Takarazuka, and Hidemi Nawafune, Takatsuki, all of Japan, assignors to Motoo Kawasaki, Hirakata and Ebara-Udylite Co., Ltd., Tokyo, both of, Japan
Filed Dec. 1, 1975, Ser. No. 636,706
Claims priority, application Japan, Dec. 10, 1974, 49-142263
Int. Cl.² C25C *1/12, 1/08, 1/10, 1/16*
U.S. Cl. 204—105 R 6 Claims

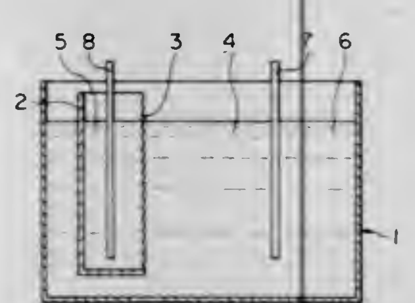

1. A method of recovering metals from sludges, characterized by supplying a sludge containing metal compounds that are sparingly soluble in alkaline solutions selected from the group consisting of metal oxides, hydroxides, carbonates and basic carbonates to an anode compartment or an intermediate compartment of an electrolytic cell provided with an anode compartment and a cathode compartment or with an anode compartment, an intermediate compartment and a cathode compartment each sectioned by a filter membrane or a cation permeable ion-exchange membrane, and conducting electrolysis by using an insoluble electrode generating as anode and an acidic electrolyte at said anode in which said metal compounds are soluble and precipitate metals dissolved from said sludges, on the cathode.

4,064,023
ELECTROCHEMICAL GROWTH OF CALCIUM HYDROXIDE CRYSTALS FROM ELECTROLYTE SOLUTIONS
Alan D. Franklin, Washington, D.C., assignor to The United States of America as represented by the Department of Health, Education and Welfare, Washington, D.C.
Filed Aug. 9, 1976, Ser. No. 712,767
Int. Cl.² C25B *1/20*
U.S. Cl. 204—130 6 Claims

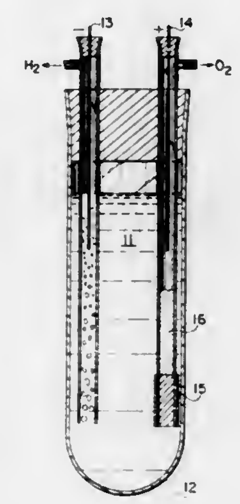

1. An electrochemical crystal growth method wherein an alkaline earth hydroxide nutrient material is continuously supplied to the anode compartment, is dissolved by electrolytic action through formation of a concentration gradient of one or more ions of the crystallizing material and is deposited near the cathode in a predetermined amount dependent on the current through the cell, and wherein the electrolyte is an aqueous mixture of an alkali metal salt and a soluble salt containing a metal ion of the product alkaline earth hydroxide crystals.

4,064,024
METHOD FOR RADIATION PRODUCTION OF FUELS
Rupert Archibald Lee, Ann Arbor, Mich., assignor to Texas Gas Transmission Corporation, Owensboro, Ky.
Filed June 1, 1976, Ser. No. 691,767
Int. Cl.² B01J *1/10*
U.S. Cl. 204—157.1 R 7 Claims

5. The method of producing gaseous fuel from CO_2 and water comprising the steps of:
A. subjecting CO_2 in the presence of SF_6 and No_2 at **500° F.** to neutron or gamma radiation disassociating CO_2 into CO and O_2;
B. reforming generated CO in Step (A) by reaction with water to H_2 and CO_2 for recycling;
C. and separating the H_2 and O_2 from said process as product gases.

4,064,025
SEPARATION OF CARBON AND NITROGEN ISOTOPES BY SELECTIVE PHOTODISSOCIATION AZO OR DIAZO COMPOUNDS
Hao-Lin Chen, Walnut Creek, Calif., assignor to The United States of America as represented by the United States Energy Research & Development Administration, Washington, D.C.
Filed Nov. 24, 1976, Ser. No. 744,475
Int. Cl.² B01J *1/10*
U.S. Cl. 204—158 R 17 Claims

1. A method for the separation of isotopes by selective photodissociation of an organic nitrogen compound selected from an azo compound having the formula $R_1N = NR_2$ wherein R_1 and R_2 represent the same or different organic radical and a diazoalkane having the linear structure $R_3R_4C = N^+ = N^-$ wherein R_3 and R_4 are the same or different and are selected from hydrogen and an organic radical, said organic nitrogen compound containing an element in a plurality of isotopes, the optical absorption of molecules containing a first such isotope being spearated from the optical absorption of molecules containing a second isotope of the same element by an isotope shift, the method comprising:
a. subjecting said organic nitrogen compound to radiation, at least a portion of said radiation being at a predetermined wavelength λ_1 to selectively excite molecules containing the first isotope, said radiation having sufficient energy to dissociate the selectively excited molecules into molecular nitrogen and a radical product without substantially dissociating unexcited molecules, thereby producing a dissociation product enriched in the first isotope, and
b. separating said dissociation product enriched in the first isotope from the reaction mixture.

4,064,026
POLYEPOXIDE ETHER POLYACRYLATE MIXTURES
Marvin L. Kaufman, Bridgewater, N.J., assignor to Mobil Oil Corporation, New York, N.Y.
Filed Apr. 12, 1976, Ser. No. 676,016
Int. Cl.² C08G *18/04;* **C08L** *63/10*
U.S. Cl. 204—159.19 16 Claims

1. A liquid mixture comprising polyethylenic polyepoxide polyether produced by etherifying a polyepoxide having an epoxy functionality of at least 1.2 and a molecular weight in the range of 350–4000, with an at least 25% stoichiometric excess, based on the epoxy group, of an hydroxy alkyl ester of an alpha, beta-monoethyenically unsaturated monocarboxylic acid, and then reacting the unreacted hydroxy alkyl ester with at least one molar equivalent of a monoanhydride selected from monoexpoides, lactones, monoisocyanates, and mixtures thereof, to substantially consume said unreacted hydroxy alkyl ester.

4,064,027
UV CURABLE COMPOSITION
George A. L. Gant, Midland, Mich., assignor to Dow Corning Corporation, Midland, Mich.
Filed Sept. 28, 1973, Ser. No. 401,791
Int. Cl.² C08F *30/08*
U.S. Cl. 204—159.13 16 Claims

1. A composition, curable upon exposure to ultraviolet light, which consists essentially of
A. a siloxane consisting essentially of from 0.5 to 100 mole percent of vinyl containing siloxane units of the general formula $(CH_2{=}CH)R_nSiO_{(3-n/2)}$ wherein R is a monovalent hydrocarbon or monovalent halogenated hydrocarbon radical and n has a value from 0 to 2, any non-vinyl containing siloxane units present having the general formula $R'_mSiO_{(4-m/2)}$ wherein R' is a monovalent hydrocarbon or monovalent halogenated hydrocarbon radical and m has a value from 0 to 3,
B. a siloxane containing at least one silicon bonded hydrogen atom,
the ratio of silicon bonded vinyl groups in (A) to the silicon bonded hydrogen atoms in (B) being in the range of 1:100 to 100:1, and (C) a photosensitizing amount of 0.01 to 20 percent by weight a photosensitizer.
15. A composition, curable upon exposure to ultraviolet light, which consists essentially of
1. a siloxane consisting essentially of from 0.1 to 100 mole percent of mercaptopropylsilsesquioxane units, any other siloxane units present in (1) being methylsilsesquioxane, propylsilsesquioxane, dimethylsiloxane and trimethylsiloxane units, and
2. a mixture of vinylmethylcyclosiloxanes, the ratio of the mercapto groups in (1) to the vinyl groups in (2) being in the range of 1:100 to 100:1, and (3) a photosensitizing amount of 0.01 to 20 percent by weight of a photosensitizer.

4,064,028
PROCESS FOR ELECTROCOATING
Yoshiaki Miyosawa, and Sueo Umemoto, both of Hiratsuka, Japan, assignors to Kansai Paint Co., Ltd., Japan
Continuation-in-part of Ser. No. 294,096, Oct. 2, 1972, abandoned. This application May 1, 1975, Ser. No. 573,756
Claims priority, application Japan, Nov. 18, 1971, 46-91936
Int. Cl.² C25D *13/06, 13/10*
U.S. Cl. 204—181 8 Claims

1. A method for preparing electrodeposition coating on an uncoated metallic article which is characterized in that the article desired to be coated is first immersed into an aqueous bath consisting essentially of 4–10 weight percent of water soluble or water dispersible resin and 0.1 to 0.8% by weight (on the basis of resin solids content) of at least one water soluble oxyacid salt selected from the group consisting of stannates, molybdates, tungstates, vanadates and borates, said article is connected to the positive electrode and supplied with DC electric voltage in the range of 30 to 300 Volts for 30 seconds to 10 minutes, then said article is rinsed with water and dried, and heated at a temperature in the range of 130 to 300° C. for 30 seconds to 60 minutes to cure the resinous component in the obtained electrodeposition coating.

4,064,029
METHOD OF MAKING AN IMPROVED SUPERCONDUCTING QUANTUM INTERFERENCE DEVICE
Cheng-Teh Wu, Hinsdale; Charles M. Falco, Woodridge, and Robert T. Kampwirth, Darien, all of Ill., assignors to The United States of America as represented by the United States Energy Research and Development Administration, Washington, D.C.
Filed Feb. 8, 1977, Ser. No. 766,653
Int. Cl.² C23C *15/00;* **G01R** *33/02*
U.S. Cl. 204—192 S 8 Claims

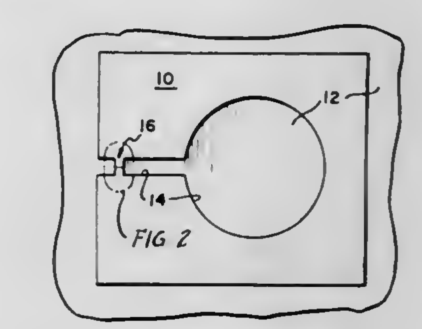

1. A method of making a thin-film SQUID on a substrate comprising the following steps:
sputtering an alloy of three parts niobium to one part tin in a desired closed loop pattern on the substrate;
depositing a shielding material over the sputtered alloy;
removing a portion of the shielding material in a thin line across said loop in a desired region;
exposing the line to particle radiation; and
removing the shielding material.

4,064,030
PROCESS FOR SURFACE TREATING MOLDED ARTICLES OF FLUORINE RESINS
Junkichi Nakai, Minoo, and Kazuo Fukunaga, Ibaraki, both of Japan, assignors to Nitto Electric Industrial Co., Ltd., Ibaraki, Japan
Filed Apr. 14, 1976, Ser. No. 676,784
Claims priority, application Japan, Apr. 14, 1975, 50-45620
Int. Cl.[2] C23C *15/00*
U.S. Cl. 204—192 E **17 Claims**

1. A process for surface treating a molded article, which comprises subjecting a molded article of a fluorinated olefin polymer to sputter etching by bringing the fluorinated olefin polymer into contact with a cathode in a chamber internally equipped with an anode and the cathode with the minimum distance between the anode and the cathode being substantially $1/\sqrt{P}$, wherein P is the pressure in Torr, said chamber being capable of being evacuated to provide a vacuum therein, and in this state applying a high frequency of several hundred KHz to several ten MHz alternating current between the anode and the cathode while maintaining the pressure and temperature of the gaseous atmosphere in the chamber at about 0.0005 to about 0.5 Torr and about −10° C to about 40° C, with the product of the discharge power for the sputter etching and the treating time being about 1 to about 1,000 watt. sec/cm², to thereby sputter etch the molded article in the resulting cathode dark space.

4,064,031
ELECTROLYZER
Georgy Mikirtychevich Kamarian, Kotelnicheskaya naberezhnaya, 25/8, kv. 45, Moscow, U.S.S.R.
Filed Apr. 14, 1976, Ser. No. 676,875
Claims priority, application U.S.S.R., Apr. 14, 1975, 2124810
Int. Cl.[2] C25B *1/16, 1/26, 9/02*
U.S. Cl. 204—256 **2 Claims**

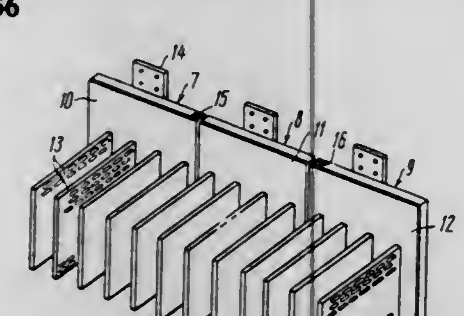

1. An electrolyzer having a plurality of cell units comprising:
a first electrode which is an anode;
a current-distribution support of said first electrode;
electrode members of said first electrode mounted on said current-distribution support and equidistantly spaced in relation to one another;
a second electrode which is a cathode;
a current-distribution support of said second electrode;
electrode members of said second electrode mounted on said current-distribution support of said second electrode and equidistantly spaced in relation to one another;
at least one bipolar electrode arranged between said first electrode and said second electrode;
said bipolar electrode being composed of at least two units; current-distribution support of said unit having two opposite sides and side planes;
electrode membes mounted on said opposite sides of said current-distribution supports of said units and equidistantly spaced in relation to one another;
at least one cassette open on top and having two side walls and at least one inner vertical partition dividing said cassette interior into at least two compartments wherein said units of said bipolar electrode are mounted, said side walls and said inner vertical partition being so shaped as to provide mounting slots for said units of said bipolar electrode at a definite position;
said units of said bipolar electrode being mounted in said cassette and joined together by means of said cassette along said side planes of said current-distribution supports of said units;
current-distribution supports of said bipolar electrode formed by said interconnected current-distribution supports of said units;
a separate shell for each cell unit formed by side walls and a bottom, and said cassette arranged therebetween;
a cover for each of said shells;
means for the supply of electrolyte, mounted on said covers; and
first and second means for the removal of products of electrolysis, mounted, respectively, on said covers and said shells.

4,064,032
ELECTROLYSIS CELL OF MODULAR STRUCTURE AND HAVING BIPOLAR ELEMENTS
Pierre Bouy, Enghien les-Bains; Hubert de Lachaux, Courbevoie, and Michel Conan, Rueil Malmaison, all of France, assignors to Rhone-Poulenc Industries, Paris, France
Filed July 29, 1975, Ser. No. 600,077
Claims priority, application France, July 29, 1974, 74.26234
Int. Cl.[2] C25B *1/16, 1/26, 9/00*
U.S. Cl. 204—270 **6 Claims**

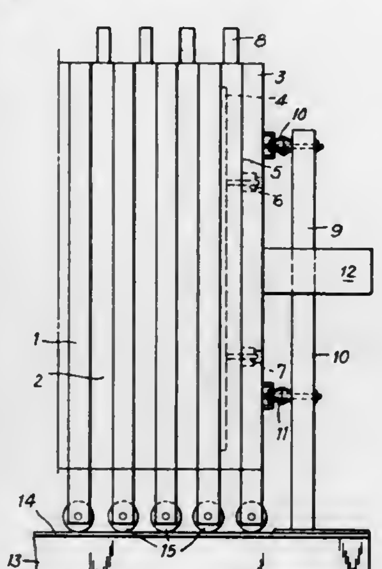

1. An electrolysis cell having bipolar elements arranged side by side, comprising an assemblage of a plurality of units of bipolar elements whose cohesion is ensured by individual assembly means on each unit, each said assembly means joining each unit to the next, said assembly means comprising positioning, attachment and clamping means.

4,064,033
ELECTROLYTIC CELL FOR ELECTROLYTICALLY PREPARING A METAL IN PULVERULENT FORM
Roger Dekeister; Gilbert Lemaire, and Daniel Marzys, all of Auby-lez-Douai, France, assignors to Compagnie Royale Asturienne des Mines, Paris, France
Filed Apr. 8, 1975, Ser. No. 566,111
Claims priority, application France, Apr. 12, 1974, 74.12912; May 29, 1974, 74.18539
Int. Cl.[2] C25C *5/02, 7/00, 7/08*
U.S. Cl. 204—275 **22 Claims**

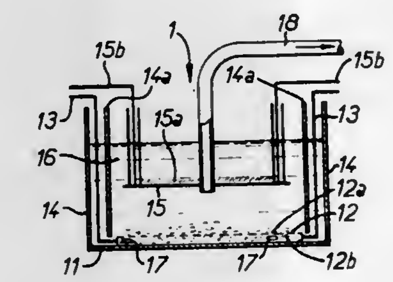

1. Apparatus for preparing a pulverulent metal from a compound of the metal in an ionized solution, comprising an electrolytic cell for containing said ionized solution, a cathode for said cell consisting of a bed of powder of metal to be deposited, said bed being settled at the bottom of said cell, current input means disposed in the midst of said cathode bed for supplying current to said bed of powder, a noncorrodable anode in said cell above the cathode, said electrolytic cell being cylindrical with a vertical axis, a plurality of injectors disposed at regular intervals about the periphery of said electrolytic cell adjacent said cathode, said injectors being tangential to said electrolytic cell and directed so that they all inject said solution in the same angular direction, means for supplying said solution to said injectors, whereby injection of said solution through said injectors causes vortical flow of said solution in said cell with suspension of metal powder in a central portion of said cell, and means for withdrawing said solution with said metal powder suspended therein from said central portion of said cell.

4,064,034
ANODE STRUCTURE FOR WIRE AND STRIP LINE ELECTROPLATING
Frederick Walter Eppensteiner, Southfield, and R. E. Woehrle, Birmingham, both of Mich., assignors to M & T Chemicals Inc., Greenwich, Conn.
Division of Ser. No. 227,305, Feb. 17, 1972, which is a division of Ser. No. 28,758, April 15, 1970, Pat. No. 3,691,049. This application May 3, 1973, Ser. No. 357,023
Int. Cl.[2] C25D *17/00, 17/10*
U.S. Cl. 204—286 **6 Claims**

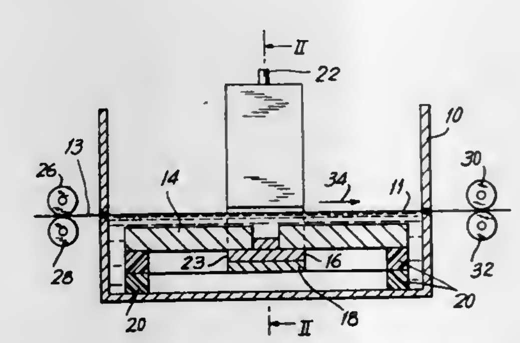

1. An anode structure for use in wire and strip line electroplating which comprises an anode of the metal to be electroplated selected from the group consisting of tin, zinc, and tin-zinc alloys; a support for said anode and disposed adjacent thereto, said support comprised essentially of at least one member selected from the group consisting of tantalum, niobium and mixtures thereof; and a sub-support disposed adjacent said support on the side thereof opposite said anode, said sub-support being comprised of the metal to be electroplated.

4,064,035
LEAD DIOXIDE ELECTRODE
Akira Fukasawa, Tokyo, Japan, assignor to Agency of Industrial Science & Technology, Tokyo, Japan
Filed Aug. 4, 1976, Ser. No. 711,498
Claims priority, application Japan, Aug. 7, 1975, 50-95414
Int. Cl.[2] C25B *11/16*
U.S. Cl. 204—290 R **5 Claims**

1. A lead dioxide electrode having at least one set of double layers consisting of an α-lead dioxide layer of thickness not less than 0.1 mm and a β-lead dioxide layer of thickness not less than 0.2 mm as the outer layer.

4,064,036
PRESSURE TESTING OF CATALYST LOADED REACTORS
Danford E. Clark, Fountain Valley, Calif., assignor to Union Oil Company of California, Los Angeles, Calif.
Continuation-in-part of Ser. No. 614,174, Sept. 17, 1975, abandoned. This application Oct. 14, 1976, Ser. No. 732,533
Int. Cl.[2] B01J *29/14;* **G01M** *3/04;* **G01N** *31/10, 33/00*
U.S. Cl. 208—46 **9 Claims**

1. In the startup of a hydrocarbon conversion process employing high-pressure hydrogen, wherein said process is carried out in a pressure-retaining system including a ferrous reactor initially charged with a catalyst comprising a Group VIII noble metal in an oxidized state supported on an at least partially hydrated crystalline aluminosilicate zeolite, the improved method for pressure-testing said system and activating said catalyst which comprises:
1. reducing said catalyst in said reactor by contacting the same with a sufficient amount of a non-combustible reducing gas comprising a mixture of nitrogen and hydrogen to provide at least one mole of hydrogen per mole of noble metal in said catalyst, at least the initial portion of said contacting being carried out at between about 50° and 300° F, said contacting being terminated prior to complete dehydration of said catalyst;
2. pressuring said system and catalyst with a non-combustible gas made up primarily of nitrogen to a static pressure above about 700 psig and above the contemplated operating pressure of said conversion process, and maintaining said static pressure at a temperature above about 200° F for a sufficient time to detect gas leakage from the system; and then
3. contacting said catalyst with a stream of substantially dry hydrogen-rich gas containing at least about 50 volume-percent hydrogen at a pressure above about 800 psig, a flow rate of at least about 100 GHSV and at temperatures gradually increasing to a maximum of at least about 450° F over a period of at least about 3 hours, thereby substantially dehydrating and activating said catalyst.

4,064,037
TEMPORARY SHUTDOWN OF CO-COMBUSTION DEVICES
Richard G. Graven, Westmont, and Robert A. Sailor, Cinnaminson, both of N.J., assignors to Mobil Oil Corporation, New York, N.Y.
Filed July 9, 1976, Ser. No. 703,862
Int. Cl.[2] C10G *11/04;* **C01B** *29/12;* **B01J** *8/24*
U.S. Cl. 208—120 **10 Claims**

1. An improved method of temporarily shutting down a CO-combustion device that is fed with the flue gas continuously discharged from a cracking process wherein a hydrocarbon feed is catalytically cracked in the absence of added hydrogen, said cracking process comprising circulating an inventory of particulate cracking catalyst in a cracking apparatus comprising a cracking zone coupled by conduit means with a

regeneration zone; contacting said feed and catalyst under cracking conditions in said cracking zone to form cracked products and catalyst contaminated by coke deposits; combusting said coke deposits with air in said regeneration zone and continuously discharging therefrom flue gas containing from about 4 to 9 volume percent CO; the improvement, whereby reducing or eliminating air pollution from said continuously discharged flue gas, which comprises:

introducing into said circulating inventory of cracking catalyst a trace amount of metal combustion promoter se-

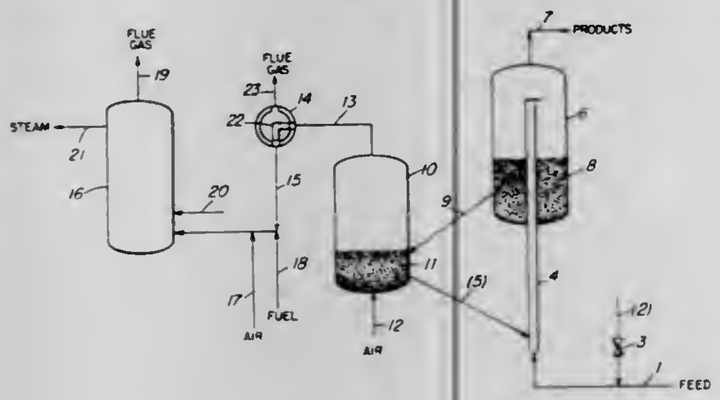

lected from compounds of platinum, iridium, osmium, palladium, rhodium, ruthenium or rhenium, said amount being effective to reduce the CO content of said flue gas continuously discharged from said regeneration zone to less than about 1 volume percent;

increasing the flow rate of said air sufficient to effect said reduction of CO content during said temporary shutdown of said CO-combustion device;

and subsequently reducing said increased flow rate of said air whereby terminating said temporary shutdown and restoring normal operation of the CO-combustion device.

4,064,038

FLUID CATALYTIC CRACKING PROCESS FOR CONVERSION OF RESIDUAL OILS

Willas L. Vermilion, Jr., Arlington Heights, Ill., assignor to Universal Oil Products Company, Des Plaines, Ill.

Continuation-in-part of Ser. No. 361,910, May 21, 1973, abandoned. This application Oct. 21, 1974, Ser. No. 516,520

Int. Cl.² C10G *11/04;* **B01J** *8/24, 29/12*

U.S. Cl. 208—120 **2 Claims**

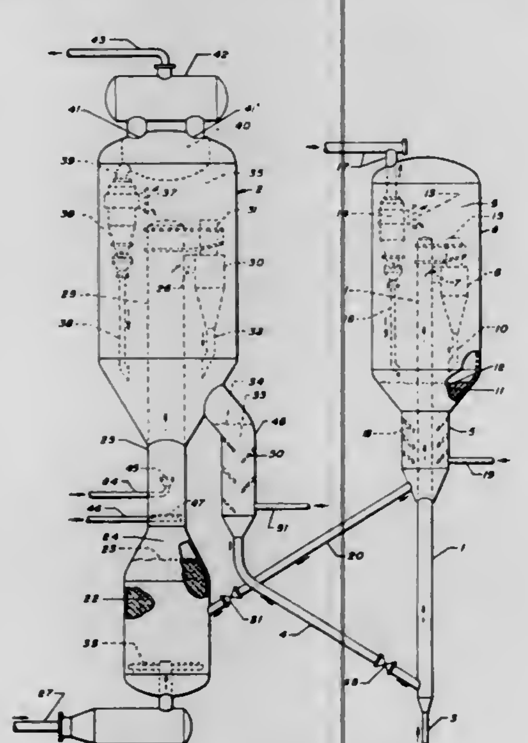

1. A fluid catalytic cracking process comprising the steps of:

a. contacting a feedstream consisting essentially of a residual oil selected from the group consisting of whole crudes and atmospheric reduced crudes, said residual oil containing at least 2 wt. % Conradson carbon, with regenerated zeolite-containing catalyst in a riser reaction zone maintained at catalytic cracking conditions selected to produce a coke yield numerically less than the sum of the wt. % Conradson carbon in the feedstream plus about 4 wt. % carbon, said cracking conditions including a temperature within the range of about 850° F. to about 1000° F. a pressure within the range of about atmospheric to about 40 psig., a hydrocarbon residence time of less than 10 seconds, and a catalyst to oil ratio of from about 3 to about 6;

b. passing said feed and catalyst through said reaction zone maintained at said cracking conditions to form a mixture consisting of spent catalyst and hydrocarbons;

c. discharging the mixture into cyclone separation means at separation conditions to effect the separation of hydrocarbons from spent catalyst and recovering the hydrocarbons;

d. passing spent catalyst from said separation means into a spent catalyst stripping zone and therein stripping spent catalyst at stripping conditions to remove adsorbed and interstitial hydrocarbons therefrom to form stripped spent catalyst containing coke thereon;

e. passing at least a portion of stripped spent catalyst to a first dense bed of fluidized particulated material maintained in a regeneration zone at a temperature within the range of about 1150° F. to about 1400° F., a superficial gas velocity within the range of about 3 to about 10 feet per second, and a catalyst residence time of less than about 2 minutes, passing fresh regeneration gas upwardly through said bed and therein oxidizing coke to produce partially spent regeneration gas, containing CO, and regenerated catalyst;

f. passing a suspension of said regenerated catalyst and partially spent regeneration gas upwardly from said bed through a dilute phase transport riser of smaller cross-sectional area than said bed and therein converting at a temperature within the range of about 1200° F. to about 1500° F. and a superficial gas velocity in the range of about 10 to about 25 feet per second CO to CO_2 to produce spent regeneration gas and transferring heat of CO combustion to the regenerated catalyst in the suspension;

g. discharging said suspension from the upper end of said riser and separating regenerated catalyst from spent regeneration gas and passing regenerated catalyst into a second dense bed of particulate material; and,

h. passing freshly regenerated catalyst from said second dense bed to said riser reaction zone to step (a) above.

4,064,039

FLUID CATALYTIC CRACKING

Joe E. Penick, Chappaqua, N.Y., assignor to Mobil Oil Corporation, New York, N.Y.

Filed Jan. 28, 1976, Ser. No. 653,167

Int. Cl.² C10G *11/18*

U.S. Cl. 208—160 **1 Claim**

1. In the process of reflexive, endothermic, non-hydrogenative cracking of hydrocarbons comprising cofeeding hot active cracking catalyst and feed hydrocarbons to a reaction zone; cracking said feed, coking said catalyst and cooling such in said reaction zone; separating cracked product from coked catalyst; regenerating coked catalyst by fluidizing such with an oxygen containing gas in an amount and at a temperature sufficient to burn coke off said catalyst whereby heating and reactivating said catalyst and producing a flue gas comprising carbon oxides in a regeneration zone; and returning said heated, reactivated catalyst to said reaction zone at predetermined temperature; the improvement which comprises modifying said cracking catalyst by incorporating up to about 50 parts per million of at least one platinum group metal therewith; providing sufficient increased oxygen to burn more carbon monoxide and to produce a flue gas containing less carbon monoxide and more carbon dioxide than would apply without sid platinum group metal whereby increasing the temperature of said regenerated catalyst above said predetermined temperature; maintaining a regenerator temperature high enough to support said catalyzed carbon monoxide burning; and cooling at least a portion of said

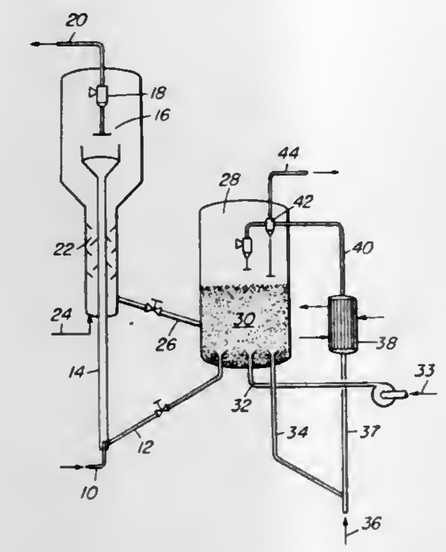

higher temperature regenerated catalyst by indirect heat exchange with water within a cyclone separator to provide a regenerated catalyst returned to said reaction zone at about said predetermined temperature.

4,064,040

SOUR WATER TREATING PROCESS UTILIZING LIQUID MEMBRANES HAVING A SULFONATED POLYMER EXTERIOR OIL PHASE

Gopal H. Singhal, 612 Ardsleigh Drive, Westfield, N.J. 07090; Martin L. Gorbaty, 9 Rainier Road, Fanwood, N.J. 07023; Richard M. Minday, 2675 Interlachen Court, Stillwater, Minn. 55082, and Norman N. Li, 16 Turner Ave., Edison, N.J. 08817, assignors to Exxon Research & Engineering Co., Linden, N.J.

Continuation-in-part of Ser. No. 482,592, June 24, 1974, Pat. No. 3,969,265. This application May 3, 1976, Ser. No. 682,271

Int. Cl.² B01D *31/00, 13/00*

U.S. Cl. 210—22 R **46 Claims**

1. A process for the removal of the salts of a weak acid and a weak base from an aqueous solution which comprises contacting said solution with a water-in-oil emulsion, said emulsion comprising from 10 to 90 weight % of an oil exterior phase, the balance of the emulsion being an aqueous interior phase, said exterior phase being characterized as immiscible with said solution and permeable to said weak base, said exterior phase comprising a sulfonated polymer and a solvent for said polymer, said sulfonated polymer having an average molecular weight of at least 1,000, said sulfonated polymer comprising a substantially nonaromatic backbone and from 0.25 to 20 mole % sulfonic acid groups, said polymer being present in said exterior phase from 0.05 to 40 weight % based upon solvent weight, said interior phase comprising a reactant which is capable of converting said weak base to a nonpermeable form, whereby said weak base permeates through said exterior phase into said interior phase wherein it is converted to a nonpermeable form, and removing said weak acid by passing an inert gas through said solution or subjecting the system to subatmospheric pressures.

4,064,041

SEPARATING MATERIAL FOR THIN LAYER CHROMATOGRAPHY

Herbert Halpaap; Walter Reich, and Johannes Ripphahn, all of Darmstadt, Germany, assignors to Merck Patent Gesellschaft mit beschraenkter Haftung, Darmstadt, Germany

Filed May 27, 1976, Ser. No. 690,728

Claims priority, application Germany, May 30, 1975, 2524065

Int. Cl.² B01D *15/08*

U.S. Cl. 210—31 C **12 Claims**

1. In a separating material for thin layer chromatography comprising a flat inert substrate having superimposed thereon a 100–300 μm thick layer of a sorption agent, wherein the improvement comprises said sorption agent consisting essentially of silica gel particles of which at least 80% are 3 to 8 μm in diameter, and not more than about 10% of said silica gel being either below 3 μm or about 8 μm, and the weight related specific surface area of said silica gel particles is 0.5–0.7 m^2/g.

4,064,042

PURIFICATION OF BLOOD USING PARTIALLY PYROLYZED POLYMER PARTICLES

Robert Kunin, Yardley, Pa., assignor to Rohm and Haas Company, Philadelphia, Pa.

Continuation-in-part of Ser. No. 550,486, Feb. 18, 1975, abandoned. This application Feb. 2, 1976, Ser. No. 654,261

Int. Cl.² B01D *15/00*

U.S. Cl. 210—40 **6 Claims**

1. A process for separating an organic substance from blood which comprises contacting the blood with particles of a partially pyrolyzed macroporous synthetic polymer produced by the controlled thermal degradation of a macroporous synthetic polymer containing a carbon-fixing moiety and derived from one or more ethylenically unsaturated monomers, or monomers which are condensed to yield macroporous polymers, or mixtures thereof, which partially pyrolyzed macroporous synthetic polymer contains: (a) at least 85% by weight of carbon, (b) multimodal pore distribution with macropores ranging in size from about 50 A to about 100,000 A in average critical dimension, and (c) a carbon to hydrogen atom ratio of between about 1.5:1 and 20:1.

4,064,043

LIQUID PHASE ADSORPTION USING PARTIALLY PYROLYZED POLYMER PARTICLES

Carl J. Kollman, Cherry Hill, N.J., assignor to Rohm and Haas Company, Philadelphia, Pa.

Continuation-in-part of Ser. No. 550,499, Feb. 18, 1975, abandoned. This application Feb. 2, 1976, Ser. No. 654,323

Int. Cl.² B01D *15/00*

U.S. Cl. 210—40 **11 Claims**

1. A process for separating an organic component from a non-body liquid medium which comprises contacting the liquid containing the organic component to be separated with particles of a partially pyrolyzed macroporous synthetic polymer produced by the controlled thermal degradation of a macroporous synthetic polymer containing a carbon-fixing moiety and derived from one or more ethylenically unsaturated monomers, or monomers which are condensed to yield macroporous polymers, or mixtures thereof, which partially pyrolyzed macroporous synthetic polymer contains: (a) at least 85% by weight of carbon, (b) multimodal pore distribution with macropores ranging in size from about 50 A to about 100,000 A in average critical dimension and (c) a carbon to hydrogen atom ratio of between about 1.5 : 1 and 20 : 1.

4,064,044

PROCESS FOR CHELATING AND INHIBITING SCALE IN AQUEOUS SYSTEMS

Patrick M. Quinlan, Webster Groves, Mo., assignor to Petrolite Corporation, St. Louis, Mo.

Division of Ser. No. 160,106, July 6, 1971, abandoned. This application Apr. 22, 1976, Ser. No. 679,390

Int. Cl.² C02B *1/26;* **C23F** *11/16*

U.S. Cl. 210—58 **12 Claims**

1. A process of inhibiting scale in a commercial water system containing as scale forming compounds calcium, barium and magnesium carbonate, sulfate, silicate, oxalate, phosphate, hydroxide or fluoride which comprises adding to said system an effective amount of a methylene phosphonate polymer selected from the group consisting of soluble or dispersible polyalkylenepolyamine-epihalohydrin polymers and polyalkylenepolyamine-dihalide compound polymers, said dihalide compound being an alkylene ether dihalide compound or an

unsaturated dihalide, said methylene phosphonate polymer having nitrogen-bonded methylene phosphonate units of the formula

$$—CH_2PO(OM)_2$$

where M is alkali metal, alkaline earth metal, hydrogen, alkyl ammonium or ammonium, the terminal nitrogen atoms of said methylene phosphonate polymers having no more than one methylene phosphonate group attached thereto, the remaining valence of the terminal nitrogen atom having attached thereto the group

$$-CH_2-\underset{\displaystyle OH}{\underset{|}{CH}}-CH_2-,$$

a divalent aliphatic ether radical, or a divalent unsaturated aliphatic radical.

4,064,045
FILTER CAKE REMOVAL METHOD AND APPARATUS
Henry Schmidt, Jr., Hinsdale, Ill., assignor to Industrial Filter & Pump Mfg. Co., Cicero, Ill.
Filed Nov. 10, 1976, Ser. No. 740,426
Int. Cl.² B01D *23/24*
U.S. Cl. 210—81 **7 Claims**

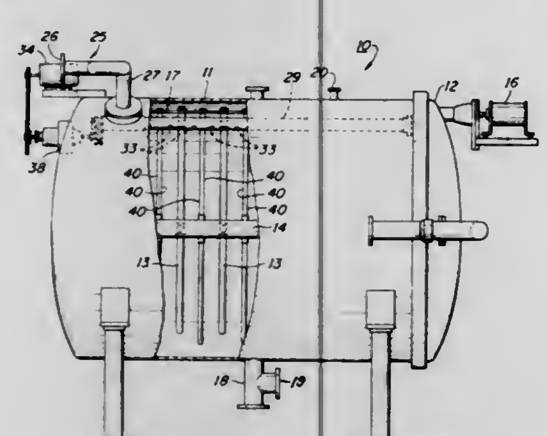

7. A method of obtaining a dry filter cake from a pressure leaf filter in which a plurality of filter leaves are mounted in mutually parallel vertical relationship in a filter chamber, said filter leaves each having oppositely disposed perforate surfaces on which filter cakes are deposited as a liquid being filtered passes therethrough, comprising the steps of
- compressing said filter cakes against said perforate surfaces by hydraulically forcing imperforate compresssion members against said cakes while a liquid prefilt is in said chamber,
- supplying gas under pressure to said chamber while simultaneously permitting said prefilt to drain out of the bottom of said chamber thereby to maintain said compression members against said cake as the level of liquid in said chamber drops,
- spraying sluicing liquid onto the upper peripheral edge portions of said cakes after level has fallen below said upper portion but said chamber still contains a substantial volume of liquid of sluice off said peripheral portions so that they drop into the lower portion of said chamber and are carried out with the prefilt liquid,
- then interrupting the supply of gas and permitting said compression members to move away from said cakes, and
- then vibrating said filter leaves to dislodge the compressed filter cakes therefrom.

4,064,046
SELF-CLEANING FILTER APPARATUS
Lloyd Dwight Gilger, 525B Dixie Drive, Palm Bay, Fla. 32905
Filed June 2, 1976, Ser. No. 692,000
Int. Cl.² B01D *29/16, 35/02, 35/14*
U.S. Cl. 210—94 **5 Claims**

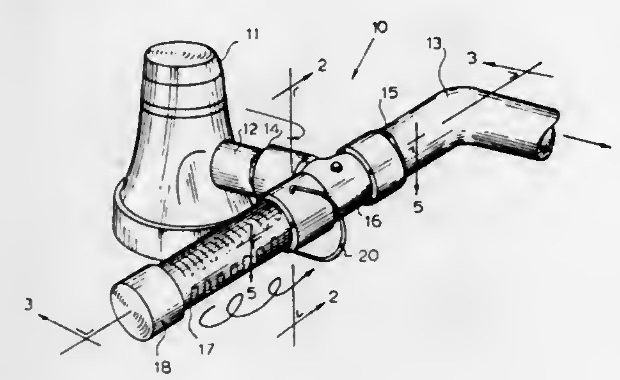

1. A self-cleaning filter apparatus comprising:
- a water pump;
- a T-joint having three openings therein with a first opening connected to said water pump;
- said T-joint having a second opening having an opening reducer attached thereto and a water output pipe connected to said reducer and leading from said T-joint;
- an elongated hollow filter support attached to said reducer limiting said second opening to a passageway through said elongated hollow filter support, said elongated hollow filter support extending through said T-support and out a third opening in said T-joint and said filter support having a solid wall portion and a slotted wall portion, said solid wall portion being located adjacent the first opening in said T-joint, whereby water from said pump is directed into said T-joint and parallel to said filter support slotted portion;
- a removable filter screen removably attached over said elongated filter support to cover said slotted portion thereof;
- a transparent cover attached over said protruding elongated filter support and filter screen and removably attached to said T-joint to enclose said third opening, said transparent cover having a sealed end portion for the accumulation of trash; and
- a quick disconnect bracket for attaching said cover to said T-joint having a pair of protruding members for protruding through openings in said T-joint adjacent an annular ridge located on said cover to removably lock said cover in place, whereby lifting said protruding members allows said transparent cover to be quickly removed and said filter cleaned.

4,064,047
METHOD AND APPARATUS FOR WASTE WATER TREATMENT
George Bernreiter, 560, 38th Avenue, Lachine, Quebec, and Leslie Truxa, 4881 Westhill, N.D.G., Montreal, Quebec, both of Canada
Filed July 19, 1976, Ser. No. 706,922
Claims priority, application Canada, July 24, 1975, 232187
Int. Cl.² C02C *1/40;* **C02B** *3/08*
U.S. Cl. 210—96 R **12 Claims**

1. Waste water treatment apparatus comprising, in combination: a closed ozone absorption chamber having an electrically grounded conductive inner wall surface at least one spray nozzle having a nozzle outlet communicating with the interior of said closed ozone absorption chamber; a waste water inlet communicating with said spray nozzle; means for supplying waste water under predetermined pressure to said waste water inlet for discharge of said waste water into the interior of said ozone absorption chamber in the form of a non-atomised spray from said spray nozzle outlet to impact on said chamber inner

surface; means for electrically charging said waste water prior to the discharge of said waste water from said spray nozzle outlet to provide transfer of an electrical charge from the waste water to the chamber wall at said impact, an ozone inlet

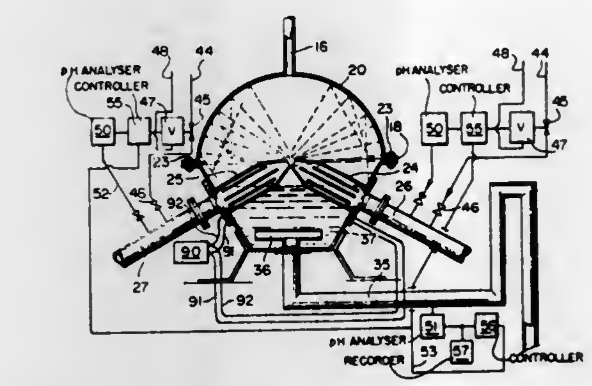

communicating with the interior of said ozone absorption chamber; means for supplying ozone under pressure to said ozone inlet for intimate mixing of said ozone with the sprayed waste water; and a waste water outlet for withdrawal of ozonated waste water from said ozone absorption chamber.

4,064,048
WATER INTAKE AND FISH CONTROL SYSTEM
Dallas I. Downs, Montrose; Lory E. Larson, Garden Grove, both of Calif., and Victor J. Schuler, Middletown, Del., assignors to Southern California Edison Company, Rosemead, Calif.
Filed Jan. 23, 1974, Ser. No. 436,013
Int. Cl.² B01D *33/00*
U.S. Cl. 210—160 **25 Claims**

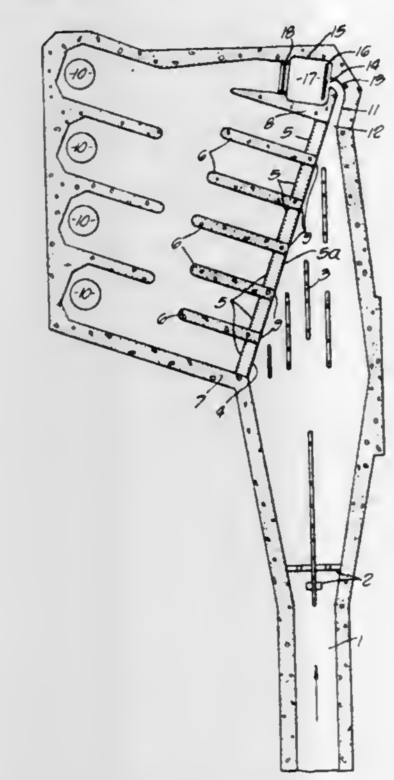

1. A fish control system for use in a watercourse through which water flows, comprising:
- a plurality of vertically extending, laterally spaced louver members mounted within at least one traveling frame assembly, each of said louver members having a front edge, a rear edge and side faces therebetween, the front edges of said louver members falling in a common plane and the each said louver member extending from said front edge to said rear edge in a direction substantially perpendicular to said common plane; and
- support means mounting each said traveling frame assembly in said watercourse such that said common plane intersects said watercourse, said support means having surface portions thereof presented to the water flowing in said watercourse, said surface portions falling in the same plane as said common plane of said front edges of said louver members so that fish in said watercourse are diverted past said traveling frame assembly and said support means while water flows between said louver members.

4,064,049
WATER CLEANER
Alexander S. Calvano, 24766 Ironwood Ave., Sunnymead, Calif. 92388
Filed July 19, 1976, Ser. No. 706,580
Int. Cl.² B01D *27/00*
U.S. Cl. 210—247 **4 Claims**

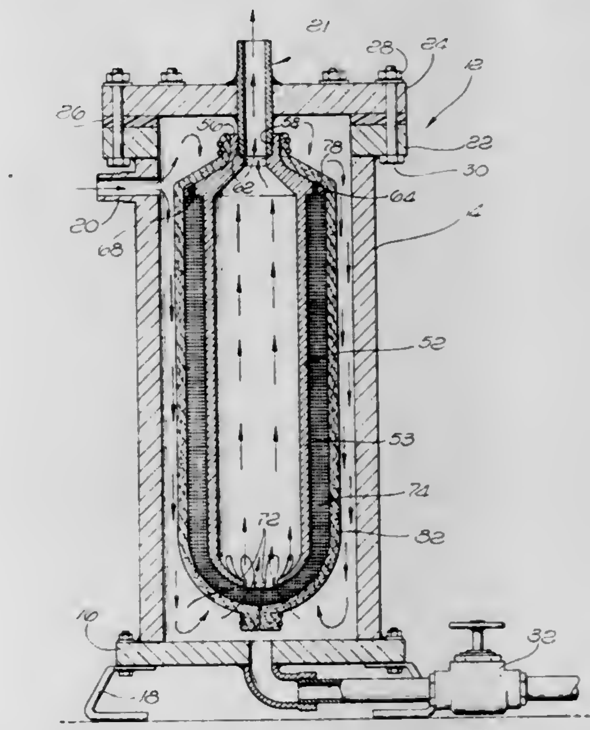

1. A water cleaner comprising: a hollow casing having a water inlet and a water outlet;
- an elongated solid tubing secured to the interior of said casing and having an inlet and an outlet and means for coupling said tubing inlet to said water inlet and said tubing outlet to said water outlet;
- a screen surrounding the exterior of said tubing and being secured thereto; and
- a filter element surrounding said screen for removing impurities from water passing from said casing inlet to said casing outlet, said elongated tubing outlet being formed at one end of said tubing and said tubing inlet consisting of an opening formed at the other end of said elongated tubing for enabling substantial seepage to occur along the filter element prior to allowing filtered water to enter the interior of said tubing and pass to said tubing outlet.

4,064,050
FILTER BOTTOM
Donald F. Heaney, and Delbert L. Boal, both of Pittsburgh, Pa., assignors to Dravo Corporation, Pittsburgh, Pa.
Filed Feb. 27, 1976, Ser. No. 662,131
Int. Cl.² B01D *23/18*
U.S. Cl. 210—293 **6 Claims**

1. A filter bottom comprising:
- a first set of longitudinal elements laid parallel to each other at spaced intervals to define elongated channels therebetween; and
- a second set of spaced longitudinal elements laid in parallel overlapping relation to the first longitudinal elements forming a roof for the elongated channels, said second longitudinal elements being provided with generally transverse slots in the lower surface thereof which together with the upper surface of the adjacent first longitudinal elements define passages which provide communication between the longitudinal channels and the space above the longitudinal elements, said second longitudinal elements being further provided with a pair of laterally

spaced flanges depending from the lower surface thereof which extend into the lower longitudinal channels and bear against the side walls of the adjacent first longitudinal

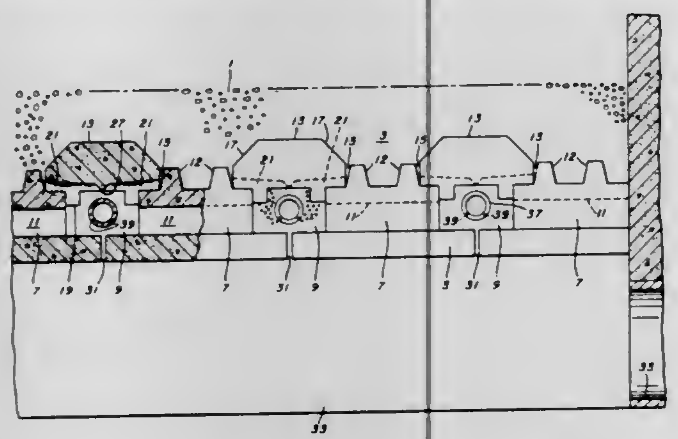

elements to prevent lateral displacement of the first and second longitudinal elements, said flanges being interrupted by the transverse slots in the lower surface of the second longitudinal elements.

4,064,051
ELASTIC TRANSPORTING, SIEVING OR FILTERING BASE WITH SWINGING DRIVE
Albert Wehner, Willaringen, Germany, assignor to Hein, Lehmann Akt., Dusseldorf, Germany
Continuation of Ser. No. 363,120, May 23, 1973, abandoned. This application Oct. 1, 1974, Ser. No. 510,960
Claims priority, application Germany, June 2, 1972, 2226968
Int. Cl.² B01D *35/20;* **B07B** *1/42*
U.S. Cl. 210—389 **16 Claims**

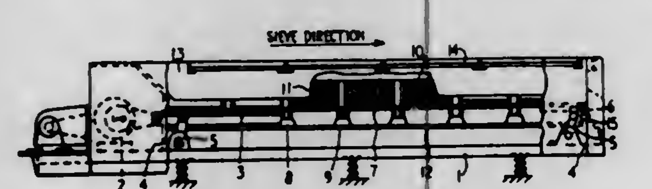

1. In combination, a screening base, transverse carriers connected with said base and dividing it into a plurality of zones, and driving devices connected with said carriers for making them singly movable and coupling them one after the other in the same linear and continuing movement to change the zones from their initial concave or convex position to a tensioned horizontal position, and from the horizontal position to a concave or convex position.

4,064,052
FRACTIONATOR MODULES HAVING LIP SEALS
Robert D. Zimmerly, Kenosha, Wis., assignor to Ladish Co., Cudahy, Wis.
Filed June 28, 1976, Ser. No. 700,415
Int. Cl.² B01D *31/00*
U.S. Cl. 210—433 M **10 Claims**

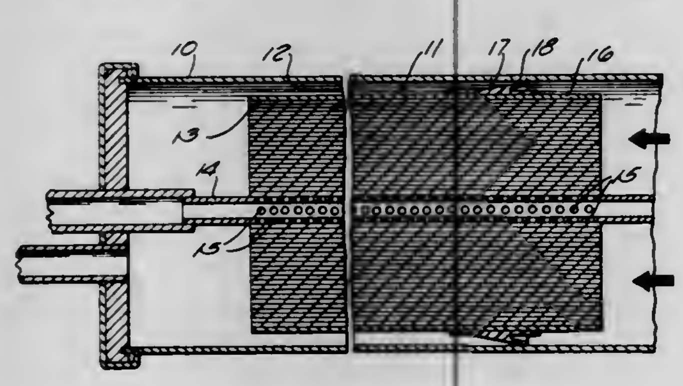

1. In a fractionator having a containment tube, a cylindrical fractionating module within said containment tube through which portions of a product to be fractionated are adapted to pass axially under pressure, an annular space between the module and tube, and an annular lip seal for sealing said annular space, the improvement comprising small aperture means through the lip of said lip seal to allow a small controlled flow to continually bypass the module through said annular space and prevent stagnation of the product behind said seal.

4,064,053
STRAINER IMPROVEMENT
Ronald L. Gerson, Newton, and Lawrence A. Caprio, Whitman, both of Mass., assignors to Louis M. Gerson Co., Inc., Middleboro, Mass.
Filed Dec. 6, 1976, Ser. No. 747,943
Int. Cl.² B01D *39/08*
U.S. Cl. 210—497 FB **4 Claims**

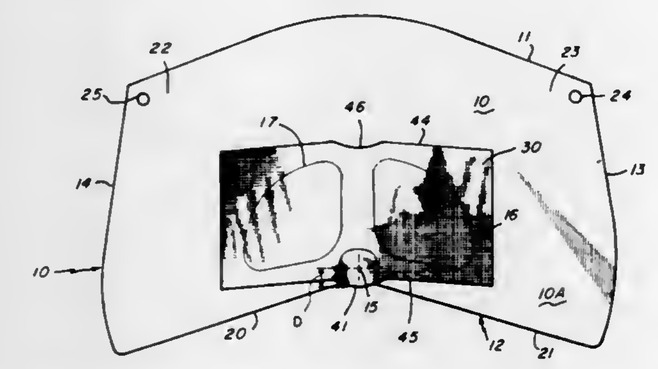

1. A paint strainer blank comprising
a flat sheet body having a first end, a second end and configured to be folded into a generally conical strainer shape,
said sheet body defining a plurality of cutouts including a cutout opening defined by said second end which forms a truncated portion of the conically folded sheet to define an apex portion of said generally conical strainer shape,
a one-piece filter material overlying said flat sheet and covering said cutouts while being adhered to marginal portions thereof to form filter areas including a conical filter area at said apex portion,
said material having a first end and a second end with said material second end defining a convex extension edge extending from said material second end at said apex portion and a corresponding concave portion at said material first end.

4,064,054
APPARATUS FOR SEPARATING OIL-WATER MIXTURES
David K. Anderson, and Marvin A. Stewart, both of Avenal, Calif., assignors to Chevron Research Company, San Francisco, Calif.
Filed Dec. 22, 1976, Ser. No. 753,047
Int. Cl.² B01D *17/02*
U.S. Cl. 210—536 **2 Claims**

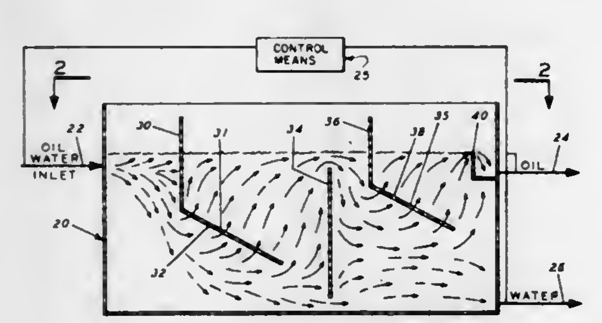

1. Apparatus for separating an oil-water mixture comprising a tank having a closed bottom, an inlet for an oil-water mixture in the side of said tank above the horizontal centerline thereof, an outlet for oil on the opposite side of said tank away from said inlet, said outlet for oil being above the horizontal centerline of said tank, an outlet for water in the said oppostie side of said tank below said outlet for oil and near the bottom of said tank, control means for controlling flow into said tank through said inlet and out of said tank through said outlet for oil and said outlet for water to permit establishment of a desired liquid level in said tank, a first baffle section connected across said tank, said first baffle section comprising a perpendicular solid portion extending from above the said inlet for oil-water mixture in said tank to a position below said inlet for oil-water mixture and being normal to the axis of flow of oil-water mixture into said tank through said inlet and spaced apart from said inlet to divert the incoming flow of said oil-water mixture in a downward direction and an inclined perforated portion extending downwardly and inwardly in the direction of flow from the lower edge of said perpendicular solid portion, a second baffle section spaced downstream from said first baffle section and connected across said tank comprising a substantially perpendicular solid plate portion contained entirely within the liquid-cotaining portion of said tank to permit flow of liquid both above and below the upper and lower edges of said plate portion and a third baffle section spaced downstream from said second baffle section and connected across said tank and comprising a solid perpendicular wall portion extending from above the liquid level in said tank to a position below said liquid level to divert the flow of said oil-water mixture in a downward direction and an inclined perforated portion extending downwardly and inwardly in the direction of flow from the lower edge of said solid perpendicular wall portion.

4,064,055
AQUEOUS DRILLING FLUIDS AND ADDITIVES THEREFOR
Leroy L. Carney, New Caney, Tex., assignor to Halliburton Company, Duncan, Okla.
Continuation-in-part of Ser. No. 501,000, Aug. 27, 1974, abandoned. This application June 1, 1976, Ser. No. 691,736
Int. Cl.² C09K *7/02*
U.S. Cl. 252—8.5 C **12 Claims**

1. An aqueous drilling fluid comprising water, clay and a friction reducing composition present in an amount of from about 0.2 pounds per barrel up to about 5 pounds per barrel of drilling fluid wherein said friction reducing composition comprises an ester of an acid and an oxazolidine derivative, said ester consisting essentially of a derivative represented by the following formula:

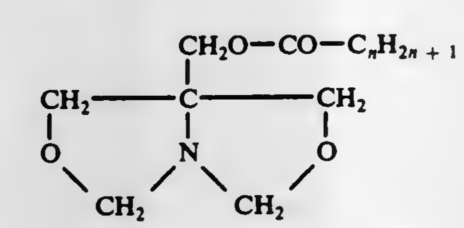

wherein *n* is an integer in the range of about 8 to 16

4,064,056
DRILLING FLUIDS CONTAINING AN ADDITIVE COMPOSITION
Thad O. Walker, Houston, and Clarence O. Walker, Richmond, both of Tex., assignors to Texaco Inc., New York, N.Y.
Filed June 28, 1976, Ser. No. 700,358
Int. Cl.² C09K *7/02*
U.S. Cl. 252—8.5 C **8 Claims**

1. An aqueous drilling fluid comprising an aqueous phase containing clay solids dispersed therein by a ferrochrome lignosulfonate dispersant and also containing an additive composition consisting essentially of an oil composition containing on a calculated weight percentage basis, from about 13 to 15% of the sodium salts of petroleum sulfonic acids having an average minimum molecular weight of 425 and gum rosin acids having an acid no. of at least 160 and a saponification no. of 166, and including from 0 to 5% of a naphthenic acid fraction obtained from a naphthenic crude oil, the distillate having a Viscosity, 100° F., of 75 S.U.S., as emulsifying agent, from about 70 to about 82% of a mineral oil carrier, consisting of a naphthenic oil blend obtained from a naphthenic distillate oil fraction having a Viscosity, 100° F. of 75 S.U.S., a refined naphthenic distillate oil fraction having a Viscosity, 210° F. of about 92 S.U.S., and a naphthenic pale oil having a Viscosity, 100° F. of about 312 S.U.S., from 0 to about 5% of a chlorinated n- paraffin hydrocarbon containing about 40% chlorine, from 0 to about 3.5% of ditirtiary nonyl polysulfide, from 0.5 to about 1% of a tetraethylene oxide-nonyl phenol adduct, from 0.5 to about 1% of tri-isopropanolamine, from 0.5 to about 1% of ethylene glycol monobutyl ether, from 0 to about 1.1% of zinc dialkyl dithiophosphate, from 0.05 to 0.1% of hexahydro 1,3,5 triethyl-s-triazine, the balance being water and wherein the chlorine content and sulfur content of said additive composition each is from 0 to 1.82%, said additive composition being present in said drilling fluid in an amount of from about 2 to about 15 pounds per barrel.

4,064,057
TEXTILE FIBER FINISHES
Götz Koerner; Günter Schmidt; Jaroslav Langner, all of Essen, and Hans-Jürgen Patzke, Gelsenkirchen-Resse, all of Germany, assignors to Th. Goldschmidt AG, Essen, Germany
Filed Dec. 9, 1976, Ser. No. 748,726
Claims priority, application United Kingdom, Dec. 10, 1975, 50681/75
Int. Cl.² D06M *11/00*
U.S. Cl. 252—8.6 **12 Claims**

1. A textile fiber finish composition suitable for use in melt spinning of fibers comprising 1 – 99% by weight of compounds having the formula

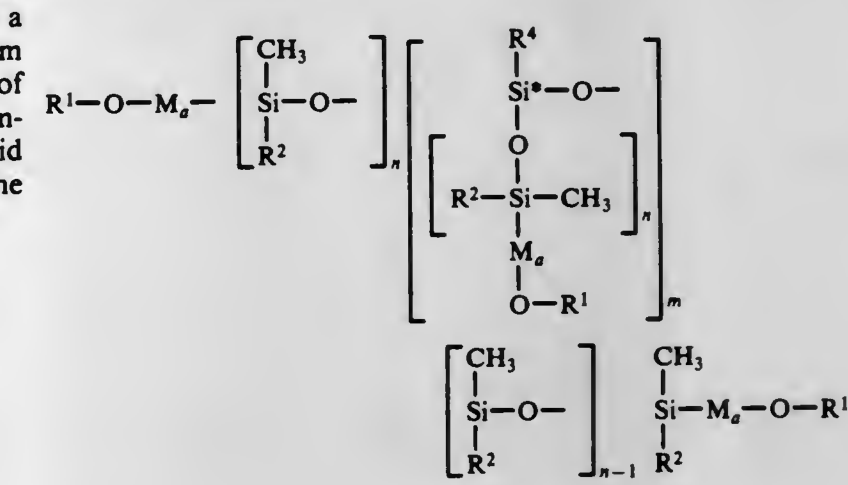

wherein
R^1 is mono-, di- or trialkylphenyl in which the sum of the carbon atoms per phenyl, bound in the form of alkyl is at least 6 and at most 12, or is trimethylsilyl,
R^2 is alkyl with 1 to 16 carbon atoms, whereby the carbon chain may be interrupted by the groups

$$-O-\overset{\displaystyle O}{\overset{\|}{C}}- \quad \text{or} \quad -\overset{\displaystyle O}{\overset{\|}{C}}-O-,$$

R^2 is the M_a-O-R^3 residue, whereby R^3 is a mono-, di- or trialkylphenyl residue, whereby the sum of the carbon atoms per phenyl residue, bound in the form of alkyl residues, is at least 6 and at most 12,
R^2 is

$$-\underset{\substack{| \\ CH_3}}{CH}-C_6H_5,$$

R^4 is an alkyl with 1 to 16 carbon atoms

$$\text{or } -O-\left[\begin{array}{c} CH_3 \\ | \\ Si-O- \\ | \\ R^2 \end{array}\right]_n M_a-O-R^1;$$

M is an alkyl residue with 1 to 3 carbon atoms, and the indices

n may have any value from 2.5 to 15,

m a value of 0 to 5 and

a a value of 0 or 1,

and the average molecule contains 5 to 30 Si atoms, of which at most 20 mole percent are Si* atoms, and 0.5 to 10 mono-, di- or trialkylphenyl residues; and further comprising 99 - 1% of conventional finish components.

4,064,058

MIXED SYNTHETIC ESTER GREASE BASE STOCK

John F. Walker, Wilmington, Del., assignor to Hercules Incorporated, Wilmington, Del.

Continuation-in-part of Ser. No. 230,997, March 1, 1972, abandoned, which is a continuation-in-part of Ser. No. 89,012, Nov. 12, 1970, abandoned. This application July 26, 1973, Ser. No. 382,785

Int. Cl.² C10M *1/24*

U.S. Cl. 252—56 S **11 Claims**

1. A composition of matter useful as grease base stock, which consists essentially of a blend of (1) a normally liquid pentaerythritol ester product and (2) a neopentyl glycol ester product, the weight ratio of said products being in a range from about 2:3 to about 9:1, said pentaerythritol ester product consisting essentially of pentaerythritol material fully esterified by C_4–C_{12} alkanoic acid material, said neopentyl glycol ester product having a substantially higher 77° F. viscosity than said pentaerythritol ester product, and consisting essentially of the reaction product of neopentyl glycol, C_4–C_{12} alkanedioic acid material, and C_4–C_{12} alkanol material, the mole ratio of said glycol to said alkanedioic acid material to said alkanol material being substantially n:(n+1):2 with n being a whole number in the range from 1 to 12.

4,064,059

SYNTHETIC AIRCRAFT TURBINE OIL

John W. Nebzydoski, and Edwin L. Patmore, both of Fishkill, N.Y., assignors to Texaco Inc., New York, N.Y.

Filed Dec. 21, 1972, Ser. No. 317,447

Int. Cl.² C10M *1/10*

U.S. Cl. 252—49.9 **13 Claims**

1. A synthetic lubricating oil composition comprising a major portion of an aliphatic ester base oil having lubricating properties formed from the reaction of a pentaerythritol or trimethylolpropane and a saturated hydrocarbyl monocarboxylic acid having from about 2 to 18 carbon atoms per molecule, containing

A. From about 0.01 to 0.5 weight percent of a substituted 4-amminotriazole represented by a formula selected from the group consisting of:

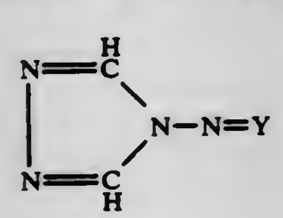

a.

-continued

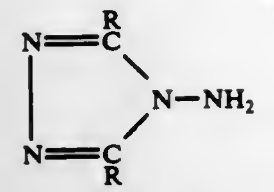

b.

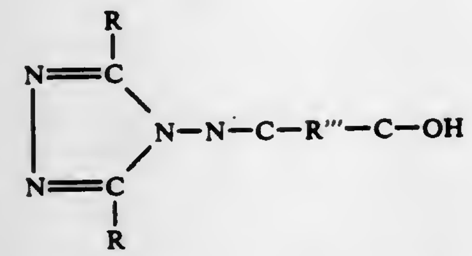

d. The amine salt of (c) in which the amine is a primary monoamine represented by the formula:

R''''NH_2

in which Y is a hydrocarbylidene radical or hydroxy-substituted hydrocarbylidene radical having from 8 to 18 carbon atoms, R is hydrogen or an aliphatic hydrocarbon radical having from 1 to 4 carbon atoms R''' is an alkylene radical having from 2 to 18 carbon atoms, and R'''' is an aliphatic hydrocarbon radical having from 1 to 18 carbon atoms B. From about 0.3 to 5 percent by weight of the lubricating oil composition of an alkyl or alkarylphenyl naphthylamine represented by the formula:

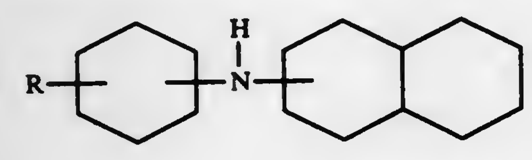

in which R is an alkyl or alkaryl radical having from about 4 to 12 carbon atoms,

C. From about 0.3 to 5 percent of a dialkyldiphenyamine in which the alkyl radicals have from 4 to 12 carbon atoms, and

D. From about 0.25 to 10 percent of a trihydrocarbyl phosphate in which said hydrocarbyl radical contains an aryl ring and contains from about 6 to 18 carbon atoms.

4,064,060

EPOXY ALCOHOL TRICYCLIC NORSESQUITERPENE DERIVATIVE AND COMPOSITIONS CONTAINING THE SAME

Pierre Maupetit, and Paul Jose Teisseire, both of Grasse, France, assignors to Societe Anonyme Roure Bertrand Dupont, Paris, France

Continuation-in-part of Ser. No. 444,684, Feb. 21, 1974, Pat. No. 4,000,202. This application Sept. 16, 1976, Ser. No. 723,749

Claims priority, application Switzerland, Feb. 28, 1973, 2884/73; July 3, 1973, 9723/73

Int. Cl.² C11D *9/04;* **C11B** *9/00;* **A61K** *7/46*

U.S. Cl. 252—89 R **4 Claims**

1. The epoxyalcohol tricyclic norsesquiterpene derivative having the formula

III

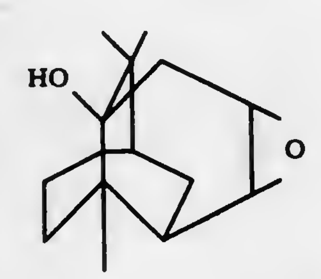

4. An odoriferous composition according to claim 2, in the form of a cleaning agent containing from about 1 to 20 wt.% of said derivative.

4,064,061

CLEANING CLOTH COMPOSITION

James M. Henry, McEwen, Tenn., assignor to Magi-Cloth, Inc., McEwen, Tenn.

Filed Jan. 4, 1977, Ser. No. 758,099

Int. Cl.² C09G *1/02, 1/08;* **C11D** *9/20, 17/04*

U.S. Cl. 252—91 **6 Claims**

1. A cleaning composition, formulated by heating and mixing ingredients in the following proportions:

Mineral Oil: 48 gals.

Ammonia: 7 1/2 gals.

Powdered Silica: 900 lbs.

Crystalline Stearic Acid: 900 lbs.

Paraffin Wax: 300 lbs.

3. A cleaning cloth prepared by dipping of said cloth into the heated and mixed composition of claim 1.

4,064,062

STABILIZED ACTIVATED PERCOMPOUND BLEACHING COMPOSITIONS AND METHODS FOR MANUFACTURE THEREOF

Joseph A. Yurko, Bayonne, N.J., assignor to Colgate-Palmolive, New York, N.Y.

Filed Dec. 15, 1975, Ser. No. 641,018

The portion of the term of this patent subsequent to Oct. 25, 1994, has been disclaimed.

Int. Cl.² C11D *7/54*

U.S. Cl. 252—99 **18 Claims**

1. A stabilized activated percompound bleaching composition in particulate form comprising, by weight, a mechanical mixture of one part of a bleaching percompound selected from the group consisting of inorganic percompounds and urea peroxide, 0.1 to 1.5 parts of an organic activator for such percompound which, in aqueous bleaching solution, activates the percompound to promote bleaching by it and is selected from the group consisting of hydroperoxide-forming triazine activators, peracid generating acyl activators and mixtures thereof, 0.1 to 3 parts of a molecular sieve zeolite selected from the group consisting of Types A, X and Y synthetic molecular sieve zeolites having the capacity to sequester calcium ions, a water content of from 0.5% to 36% by weight and a particle size of 0.5 to 12 microns, and 0.1 to 3 parts of a C_{10}–C_{18} fatty acid, said fatty acid being in powder form and the particles of said composition having a diameter of from 0.5 microns to 2.5 millimeters.

4,064,063

PROCESS FOR THE MANUFACTURE OF SPRAY DRIED DETERGENTS CONTAINING NONIONIC TENSIDES

Wilfried Alder, Hilden; Josef Huppertz, Dusseldorf-Holthausen; Herbert Latka, Neuss, and Gerhard Sperling, Hilden, all of Germany, assignors to Henkel Kommanditgesellschaft auf Aktien, Dusseldorf, Germany

Filed June 25, 1975, Ser. No. 590,191

Claims priority, application Germany, July 1, 1974, 2431529

Int. Cl.² B01J *2/04;* **C11D** *11/00, 11/02, 17/06*

U.S. Cl. 252—135 **5 Claims**

1. In the process of the production of spray dried detergent powders containing at least one nonionic surfaceactive compound of the class of polyoxyalkylene glycol derivatives comprising the steps of spraying an aqueous slurry of the detergent ingredients in a conical pattern into a fall space while passing a large volume of air therethrough at an inlet temperature in excess of 150° and recovering said spray dried detergent powders containing at least one nonionic surface-active compound of the class of an ethoxylation product of an alcohol selected from the group consisting of alkanols having 10 to 20 carbon atoms, alkenols having 10 to 20 carbon atoms, vicinal alkanediols having 10 to 20 carbon atoms and alkylphenols having 10 to 20 carbon atoms in the alkyl, said ethoxylation product containing from 5 to 20 oxyethylene units, and conventional detergent components of the following type: anionic surface-active compounds, zwitterionic surface-active compounds, builder salts, soil suspending agents, optical brighteners, neutral salts, magnesium silicate and hydrotropic substances, the improvement consisting of utilizing, as said aqueous slurry, an aqueous slurry containing from 50% to 90% by weight of the total solids of the final spray dried detergent including from 0 to 5% at most, by weight of the total solids, of said at least one nonionic surface-active compounds, said aqueous slurry having a solids content of from 65% to 75% by weight, and injecting into said fall space above said conical spray pattern a free-flowing, water-soluble powder granulate consisting of the remainder of the total solids of the final spray dried detergent selected from the group consisting of alkali metal polymeric phosphates and mixtures of alkali metal polymeric phosphate and alkali metal silicates having an amount of said at least one nonionic surface-active compound of the class of polyoxyalkylene glycol derivatives deposited thereon in such a manner as to form a granulate, having a particle size predominately in the range of from 0.1 to 0.8 mm, where the ratio by weight of solids other than said nonionic surface-active compound to said nonionic surface-active compound in said granulate amounts to 20:1 to 8:1.

5. In the process for the production of spray dried detergent powders containing at least one nonionic surface-active compound of the class of polyoxyalkylene glycol derivatives comprising the steps of spraying an aqueous slurry of the detergent ingredients in a conical pattern into a fall space while passing a large volume of air therethrough at an inlet temperature in excess of 150° C and recovering said spray dried detergent powders containing at least one nonionic surface-active compound of the class of polyoxyalkylene glycol derivatives and conventional detergent components of the following type: anionic surface-active compounds, zwitterionic surface-active compounds, builder slats, soil suspending agents, optical brighteners, neutral salts, magnesium silicate and hydrotropic substances, the improvement consisting of utilizing, as said aqueous slurry, an aqueous slurry containing from 50% to 90% by weight of the total solids of the final spray dried detergent including from 0 to 5% at the most, by weight of the total solids, of said at least one nonionic surfaceactive compound, said aqueous slurry having a solids content of from 65% to 75% by weight, and injecting into said fall space above said conical spray pattern a free-flowing, water-soluble powder granulate consisting of the remainder of the total solids of the final spray dried detergent selected from the group consisting of alkali metal polymeric phosphates and mixtures of alkali metalpolymeric phosphate and alkali metal silicates having an amount of said at least one nonionic surface-active compound of the class of polyoxyalkylene glycol derivatives deposited thereon in such a manner as to form a granulate, having a particle size predominately in the range of from 0.1 to 0.8 mm, where said water-soluble powder granulate has a ratio by weight of solids other than said nonionic surface-active compound to said nonionic surface-active compound of from 8:1 to 5:1 and contains additional adsorption agents having a large area selected from the group consisting of silicic acid, natural zeolites and synthetic zeolites in sufficient amounts so that the granulate is free-flowing.

4,064,064

STABILIZATION OF HYDROGEN PEROXIDE SOLUTIONS

Michael McKay Rauhut, Bridgewater, and Andrew Milo Semsel, Somerville, both of N.J., assignors to American Cyanamid Company, Stamford, Conn.

Filed Sept. 15, 1976, Ser. No. 723,354

Int. Cl.² C09K *11/06*

U.S. Cl. 252—188.3 CL **5 Claims**

1. A stabilized separate component in a chemiluminescent light system consisting essentially of a solution in organic

solvent of a hydroperoxide compound and a stabilizing amount of a phenolic antioxidant compound of the formula

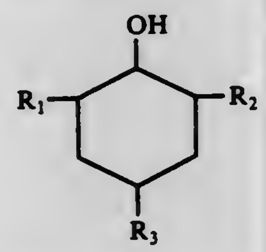

wherein each of R_1 and R_2 is tertiary alkyl having 4 to 12 carbon atoms and R_3 is alkyl having 1 to 12 carbon atoms.

4,064,065

AQUEOUS SOLUTIONS OF ALKALI METAL HYDROXIDES

James W. Stoll, Woodridge, Ill., assignor to Nalco Chemical Company, Oak Brook, Ill.

Filed June 10, 1976, Ser. No. 694,755

Int. Cl.² C09K *3/00*

U.S. Cl. 252—192 **1 Claim**

1. An aqueous solution of alkali metal hydroxides comprising:

A. a 50% by weight aqueous solution of sodium hydroxide, and

B. a 45% by weight aqueous solution of potassium hydroxide,

with the weight ratio of A to B being 2:1, said aqueous solution of the alkali metal hydroxides having a freezing point of about 0° F.

4,064,066

PHOSPHORS FOR INFRARED-TO-VISIBLE CONVERSION

Akio Toshinai, No. 5-205, 4-chome, Tsurugadai, Chigasaki, Kanagawa, and Takashi Hase, No. 20-41, Dai, Kamakura, Kanagawa, both of Japan

Continuation of Ser. No. 581,924, May 29, 1975, abandoned, which is a continuation-in-part of Ser. No. 409,301, Oct. 24, 1973, abandoned, which is a continuation-in-part of Ser. No. 209,750, Dec. 20, 1971, Pat. No. 3,785,991. This application Sept. 2, 1976, Ser. No. 719,693

Claims priority, application Japan, Dec. 21, 1970, 45-114907; June 8, 1971, 46-40356

The portion of the term of this patent subsequent to Jan. 15, 1991, has been disclaimed.

Int. Cl.² C09K *11/46*

U.S. Cl. 252—301.6 R **8 Claims**

1. A zinc-incorporated phosphor for infrared-to-visible conversion, prepared by the process which comprises adding zinc fluoride in an amount of at least 2% by weight or zinc silicofluoride in an amount of at least 10% by weight based on the total weight of the anhydrous rare earth fluorides shown by the general composition hereafter, prior to or after formation of the main ingredient of the phosphor consisting essentially of a complex rare earth fluoride having a general composition expressed by one of the following formulae

$$(Y_{1-x-y}Yb_xA_y)\,F_3,\ (La_{1-x-y}Yb_xA_y)\,F_3$$

and

$$(Lu_{1-x-y}Yb_xA_y)\,F_3,$$

wherein x is in the range of from 0.05 to 0.5, y is in the range from 0.002 to 0.09 when yttrium fluoride is the host material and from 0.001 to 0.1 when lanthanum or lutetium fluoride is the host material, and A is at least one member selected from Er and Ho, and subsequent heating at a temperature ranging from 800° to 1,200° C when lanthanum fluoride is the host material and from 800° to 1100° C, when yttrium fluoride or lutetium fluoride is the host material for a time of 30 minutes to 5 hours in a neutral or anhydrous hydrogen fluoride atmosphere.

4,064,067

FLUOROSURFACTANT LEVELING AGENT

Albert L. Lore, Pennsville, N.J., assignor to E. I. Du Pont de Nemours and Company, Wilmington, Del.

Filed Apr. 26, 1976, Ser. No. 680,600

Int. Cl.² B01F *17/00*

U.S. Cl. 252—355 **11 Claims**

1. A leveling composition consisting essentially of a mixture of:

A. at least one water-soluble cationic surfactant chosen from

$[RN(CH_3)_3]Q$, $[RR'N(CH_3)_2]Q$ and

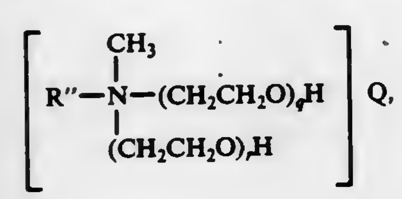

wherein

R and R' are C_5–C_{18} alkyl, R'' is C_{12}–C_{18} alkyl, Q is a water-solubilizing anion and q and r are integers in the range 1–25; and

B. at least one anionic water-soluble polyfluoroalkyl phosphate of the formula

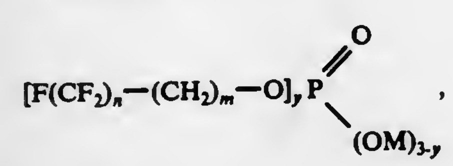

wherein M is a water-solubilizing cation, y is a number of average value from 1.0 to 2.5, n is an integer from 4 to 14 and m is an integer from 1 to 16,

the mole ratio of cationic A to anionic B being in the range 0.1/1 to 0.5/1.

4,064,068

PREPARATION OF ISOPROPYLNAPHTHALENE MIXTURE

Marcus W. Haseltine, Jr., Brookhaven, Pa., assignor to Sun Oil Company of Pennsylvania, Philadelphia, Pa.

Filed July 30, 1975, Ser. No. 600,672

Int. Cl.² B01F *1/00*

U.S. Cl. 252—364 **13 Claims**

1. In the process of alkylating naphthalene with an alkylating agent in the presence of an alkylation catalyst to obtain a mixture of alkylated naphthalenes, the improvement of increasing the yield of dialkylnaphthalene which comprises adding additional catalyst after the alkylation is completed and then holding the reaction mass at a temperature of from about 180° to about 280° F. for a time sufficient to maximize yield of dialkylated product.

4,064,069

PROCESS FOR THE PRODUCTION OF A CATALYST COMPONENT FOR USE IN THE POLYMERIZATION OF α-OLEFINS

Hiroshi Ueno; Naomi Inaba, both of Ohi; Tokuo Makishima, Kawagoe, and Shozo Wada, Zushi, all of Japan, assignors to Toa Nenryo Kogyo Kabushiki Kaisha, Tokyo, Japan

Filed July 6, 1976, Ser. No. 704,310

Claims priority, application Japan, July 9, 1975, 50-83562

Int. Cl.² C08F *4/64*

U.S. Cl. 252—429 B **7 Claims**

1. A process for the production of a catalyst component for use in polymerization of alpha-olefins which comprises:

reducing titanium tetrachloride with an organoaluminum compound having the general formula AlR_nX_{3-n} wherein R represents a hydrocarbon group having 1 to 18 carbon atoms, X represents a halogen, and n represents a number expressed as $0 < n \leqq 3$ to obtain a brown or black-brown titanium trichloride reduced solid containing aluminum compounds;

removing aluminum compounds from said brown or black-brown titanium trichloride reduced solid; and thereafter

contacting said brown or black-brown titanium trichloride reduced solid in an inert diluent with an activator selected from the group consisting of a complex of diisoamyl ether and titanium tetrachloride, and a mixture of diisoamyl ether and titanium tetrachloride at a temperature within the range of from −30° to 100° C for at least 30 minutes, wherein the mole ratio of diisoamyl ether to titanium trichloride is at least 0.1 and the concentration of titanium tetrachloride in the liquid phase is maintained at at least 1 volume percent.

4,064,070

CATALYST FOR PRODUCING MALEIC ANHYDRIDE

Jonas P. Harrison, Pinole, Calif., assignor to Chevron Research Company, San Francisco, Calif.

Division of Ser. No. 535,456, Dec. 23, 1974, abandoned. This application Oct. 4, 1976, Ser. No. 729,335

Int. Cl.² B01J *27/14*

U.S. Cl. 252—435 **5 Claims**

1. A catalyst comprising oxides of vanadium, phosphorus, and silicon prepared by steps comprising:

a. coprecipitating vanadium oxide and an alkyl orthosilicate in an organic medium to form a coprecipitate of vanadium oxide and silica or a silica precursor and wherein the alkyl groups of the alkyl orthosilicate have 1 to 10 carbon atoms;

b. coprecipitating phosphorus either simultaneously with the vanadium oxide and alkyl orthosilicate coprecipitation or thereafter to thereby obtain the catalyst precursor; and

c. calcining the catalyst precursor to thereby obtain the silica-containing catalyst.

4,064,071

PROCESS FOR AGGLOMERATING EXPANDED PERLITE FINES

John B. Gilmour, Whittier; Praful K. A. Mehta, Lomita; Melvin J. Mirliss, Long Beach, and Richard B. Nielsen, Los Angeles, all of Calif., assignors to General Refractories Company, Bala Cynwyd, Pa.

Filed June 28, 1976, Ser. No. 700,553

Int. Cl.² B01J *21/12*

U.S. Cl. 252—455 R **6 Claims**

1. A process for producing an improved perlite filter aid which comprises mixing finely divided expanded perlite particles with an aqueous solution of alkali metal silicate to form a composition having perlite: alkali metal silicate: water in the ratio of about 100:1:5 to about 100:10:100, removing the free moisture and drying the mixture by suspending said composition in a moving gas stream at a temperature of from about 600° F to less than about 1400° F, whereby the perlite particles form dry agglomerates, and heat treating said dry agglomerates by indirect firing at about 1100° to about 1300° F to increase the water insolubility of the agglomerates.

4,064,072

AMMOXIDATION CATALYST

Ronald D. Bushick, Glen Mills, Pa., assignor to Suntech, Inc., St. Davids, Pa.

Division of Ser. No. 665,342, March 9, 1976, Pat. No. 4,013,705. This application Sept. 30, 1976, Ser. No. 728,489

Int. Cl.² B01J *21/04, 23/04, 23/22*

U.S. Cl. 252—464 **5 Claims**

1. A catalyst composition consisting essentially of from about 0.5% to 20% by weight of the total catalyst of an alkali metal bronze and an iron oxide in an amount from about 0.5 to about 25 mole percent of the catalyst expressed as oxides on a support consisting essentially of α-alumina.

4,064,073

CATALYST FOR THE PURIFICATION OF THE EXHAUST GASES OF INTERNAL COMBUSTION ENGINES

Jean Louis Emile Pomot, Mouans Sartoux, France, assignor to Societe Francaise d'Oxycatalyse, France

Filed Dec. 12, 1975, Ser. No. 640,280

Claims priority, application France, Dec. 13, 1974, 74.41145

Int. Cl.² B01J *21/04, 23/64, 23/86*

U.S. Cl. 252—465 **9 Claims**

1. A pollution removing catalytic complex for exhaust gases of gasoline-operated internal-combustion engines and like gases containing unburnt hydrocarbons, oxygen, carbon monoxide, at least one oxide of nitrogen and water vapor, said catalytic complex comprising an intimate admixture on a porous substrate designed to be fitted in the path of said exhaust gases, said intimate admixture consisting essentially of:

a. a first catalyst component suitable for liberating hydrogen through the reaction of carbon monoxide and water, said first catalyst component consisting essentially of a mixture of iron oxide and a chromium oxide; and

b. a second catalyst component capable of catalyzing the reaction of the thus-liberated hydrogen with oxides of nitrogen, said second catalyst component being carried on the surface of said first catalyst component and consisting essentially of ruthenium and at least one of the metals platinum and palladium.

4,064,074

METHODS FOR THE MANUFACTURE AND USE OF ELECTRICALLY CONDUCTIVE COMPOSITIONS AND DEVICES

Harold Ellis, Miami Beach, Fla., assignor to Delphic Research Laboratories, Inc., Miami, Fla.

Division of Ser. No. 594,406, July 8, 1975, Pat. No. 3,999,040, which is a division of Ser. No. 438,824, Feb. 1, 1974, Pat. No. 3,923,697. This application Nov. 12, 1976, Ser. No. 741,427

Int. Cl.² H01B *1/06*

U.S. Cl. 252—506 **34 Claims**

1. A process for the preparation of an electrically conductive coating composition comprising a particulate component and a vehicle, said process comprising preparing a particulate, homogeneous blend of:

A. about 60 to about 98% by weight of graphite,

B. about 1.5 to about 20% by weight of manganese dioxide, and

C. about 0.5 to about 20% by weight of zinc oxide, each of said percentages based on the total weight of said blend;

and mixing said blend with an organic or inorganic vehicle which does not dissolve said particulate blend, to thereby form a homogeneous composition suitable for application to a substrate and capable of being adhered thereto, and which when cured thereon forms an infrared radiating coating when an electric current is passed through said coating.

4,064,075

CONDUCTIVE, EXTRUDABLE POLYMER COMPOSITION OF POLY(ε-CAPROAMIDE) AND CARBON BLACK

Donald Robert Hull, Wilmington, Del., assignor to E. I. Du Pont de Nemours and Company, Wilmington, Del.

Filed Aug. 11, 1972, Ser. No. 279,825

Int. Cl.² H01B *1/06*

U.S. Cl. 252—511 **4 Claims**

1. Highly conductive, extrudable polymer composition having a specific resistance of less than 200 ohm-centimeter consisting essentially of poly (ε-caproamide) containing from

about 16 to about 28% by weight based on the weight of the composition of an electrically conductive carbon black.

4,064,076

OLEFIN SULFONATE DETERGENT COMPOSITIONS

Stephen Cajetan Klisch, Somerset, and Charles Andrew Martin, Morris Plains, both of N.J., assignors to Colgate-Palmolive, New York, N.Y.

Continuation of Ser. No. 349,035, April 9, 1973, abandoned. This application Oct. 14, 1975, Ser. No. 622,187

The portion of the term of this patent subsequent to Sept. 7, 1993, has been disclaimed.

Int. Cl.^{2} C11D *1/14, 1/75, 1/83, 17/08*

U.S. Cl. 252—542 **9 Claims**

1. A light duty liquid detergent composition consisting essentially of about 18% to 40% by weight of a mixture of at least one water-soluble salt of a sulfonate alpha olefin containing about 12 to 18 carbon atoms and at least one water-soluble salt of an ethoxylated alkyl sulfate containing an alkyl group of 10 to 18 carbon atoms and from 1 to 5 ethenoxy groups, the weight ratio of olefin sulfonate to alkyl sulfate being from about 1.4:1 to about 1.1:1, about 1.5% to about 10% by weight of an amine oxide foam booster selected from the group consisting of tertiary amine oxides having the formula

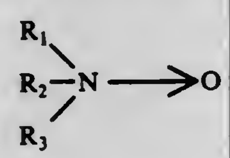

wherein R_1 is a higher alkyl group containing about 12 to 18 carbon atoms and R_2 and R_3 are radicals selected from the group consisting of alkyl and hydroxyalkyl groups having 1 to 4 carbon atoms, morpholino oxides having the formula

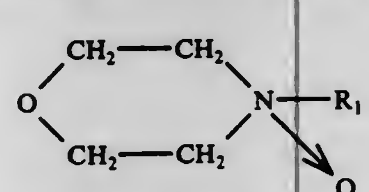

wherein R_1 is a higher alkyl group containing about 12 to 18 carbon atoms and mixtures thereof, and about 1% to 8% by weight of sodium allyl sulfonate in an aqueous medium.

4,064,077

TOUGHENED ARTICLES COMPOSED OF LINEAR AROMATIC POLYMERS

David M. Gale, Wilmington, Del., assignor to E. I. Du Pont de Nemours and Company, Wilmington, Del.

Division of Ser. No. 389,989, Aug. 21, 1973, Pat. No. 4,011,293. This application Oct. 7, 1976, Ser. No. 730,517

Int. Cl.^{2} C08G *61/10;* **C08J** *5/00*

U.S. Cl. 260—2 H **5 Claims**

1. A shaped article having a room temperature tensile toughness value greater than 40 which comprises sintered, compacted polymeric particles wherein said particles comprise substantially linear, aromatic polymer selected from the group consisting of aromatic hydrocarbon polymers, aromatic halocarbon polymers and aromatic halohydrocarbon polymers, and said polymer consists of essentially of substantially heteroatom-free aromatic linkages along the polymer backbone, is thermally stable at 400° C as evidenced by a decompo-

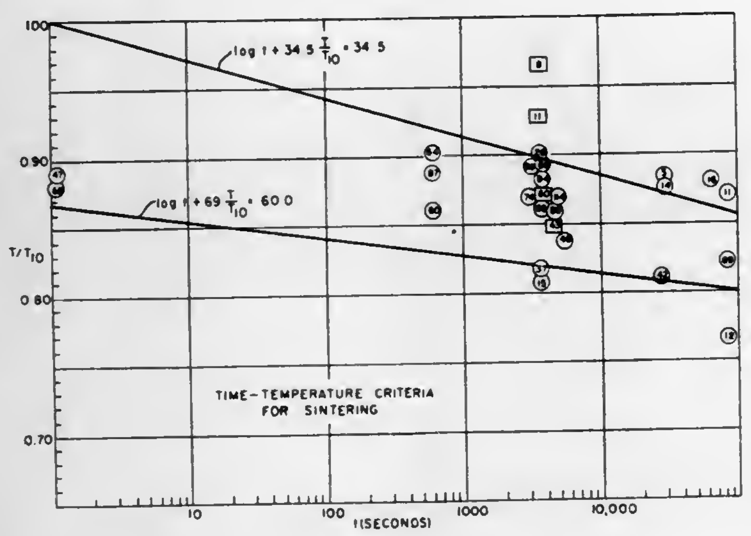

sition temperature about 400° C, is infusible at the decomposition temperature, and is insoluble in conventional solvents.

4,064,078

PROCESS FOR THE MANUFACTURE OF CARBOXYLATED POLYETHYLENIMINES

Georges Joseph Smets, Heverlee, and Jacques Marie Van De Putte, Leuven, both of Belgium, assignors to Agfa-Gevaert, N.V., Mortsel, Belgium

Filed Dec. 1, 1972, Ser. No. 311,159

Claims priority, application United Kingdom, Dec. 6, 1971, 56450/71

Int. Cl.^{2} C08G *73/04*

U.S. Cl. 260—2 EN **9 Claims**

1. Process for the manufacture of carboxylated polyethylenimines, which comprises treating a compound dissolved in an inert solvent with a polymerization initiator selected from the group consisting of Lewis acids and strong proton donors at a temperature between −30° and 25° C, said compound corresponding to the general formula:

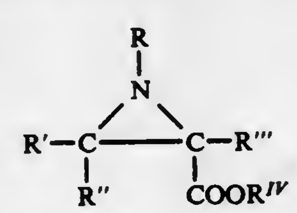

wherein:

R represents an alkyl group of 1 to 4 carbon atoms of an aryl group,

each of R′, R″, R‴ represents hydrogen or methyl, and R^{IV} represents an alkyl group of 1 to 4 carbon atoms.

4,064,079

POLYESTER POLYMER RECOVERY

Norman C. Sidebotham, Gulf Breeze; Paul D. Shoemaker, and Clarence W. Young, III, both of Pensacola, all of Fla., assignors to Monsanto Company, Decatur, Ala.

Continuation-in-part of Ser. No. 571,455, April 25, 1975, abandoned. This application Apr. 5, 1976, Ser. No. 674,023

Int. Cl.^{2} C08J *11/04;* **C08G** *63/70*

U.S. Cl. 260—2.3 **22 Claims**

1. A process for recovering solid linear polyester polymer from polyester fibers which comprises the steps of:

a. dissolving the polyester fibers in a non-depolymerizing dissolution solvent for polyester under conditions permitting dissolution of high molecular weight polyester without loss of more than 15% of such molecular weight, to form a solution;

b. quenching the solution under such conditions that the polyester polymer is caused to precipitate out in a form having a molecular weight of within 15% of the molecular weight of the fibers leaving the solvent in liquid phase; and,

c. separating the precipitated polyester polymer from the non-depolymerizing solvent.

4,064,080

LATEX OF STYRENE POLYMERS WITH TERMINAL AMINO-SULFONATED GROUPS AND METHOD OF MAKING

Jean-Claude Daniel, Fontenay-sous-Bois, France, assignor to Rhone-Poulenc Industries, Paris, France

Filed Aug. 9, 1976, Ser. No. 713,056

Claims priority, application France, Aug. 22, 1975, 75.26056

Int. Cl.^{2} C08L *89/00*

U.S. Cl. 260—8 **16 Claims**

5. A method of preparing latices of polymers having terminal

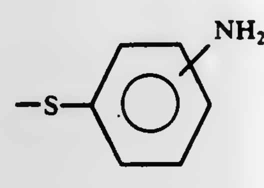

groups, in the form of stable latices, the polymer particles of which have an average diameter of between 0.05 and 3 μm and a glass transition temperature above 20° C, comprising polymerizing a styrene compound, alone or in admixture, with a copolymerizable vinyl monomer in an aqueous emulsion in the presence of 0.1 to 10% by weight of a chain transfer agent, selected from the group consisting of aminophenyl disulphide and aminophenyl mercaptan at least one emulsifying agent, and a water soluble diazo initiator.

4,064,081

EMULSION POLYMERIZATION IN THE PRESENCE OF LIGNOSULFONATE SALT

Robert H. McCoy, Cheshire, and Woodrow W. White, Oxford, both of Conn., assignors to Uniroyal, Inc., New York, N.Y.

Filed Jan. 7, 1976, Ser. No. 647,017

Int. Cl.^{2} C08F *2/26*

U.S. Cl. 260—17.5 **20 Claims**

1. An improved emulsion polymerization process for preparing a polymer latex comprising polymerizing an emulsion polymerizable ethylenically unsaturated monomeric material in an aqueous medium in the presence of an emulsion polymerization catalyst for said monomeric material, and in the presence of an anionic principal emulsifying agent, the improvement comprising including a water-soluble lignosulfonate salt as an emulsion modifier.

4,064,082

ASPHALTIC COMPOSITION AND ITS MANUFACTURE

Leonard Henschel, Princeton, N.J., assignor to Mobil Oil Corporation, New York, N.Y.

Filed Apr. 2, 1976, Ser. No. 673,171

Int. Cl.^{2} C08L *91/00*

U.S. Cl. 260—27 EV **9 Claims**

1. An asphaltic composition comprising a major proportion of road asphalt, a minor proportion of thermal asphalt, a minor proportion of a copolymer of ethylene and vinyl acetate and a minor proportion of a terpenic resin.

4,064,083

PATTERN MATERIAL COMPOSITION

Robert A. Horton, Chesterland, and Ella M. Yaichner, Eastlake, both of Ohio, assignors to Precision Metalsmiths, Inc., Cleveland, Ohio

Filed June 28, 1976, Ser. No. 700,175

Int. Cl.^{2} C08L *91/00*

U.S. Cl. 260—28.5 R **7 Claims**

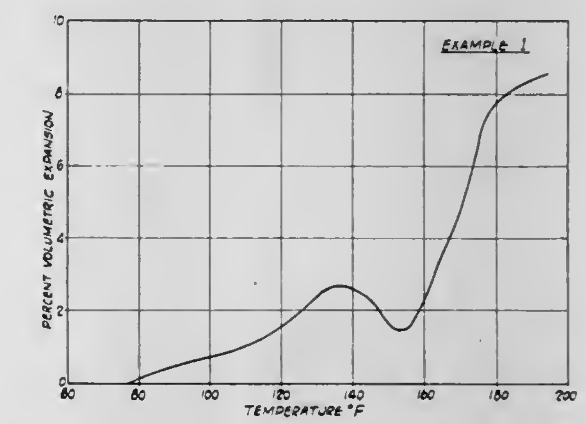

1. A heat disposable pattern having the characteristics of being machinable and meltable out of investment molds, said material consisting essentially of from 0.5–30% by weight of ethylene-vinyl resin selected from the group consisting of ethylene-vinyl acetate polymers and ethylene-acrylate copolymers from 0 to about 30% by weight of at least one material selected from the class of waxes, solid fillers and resins other than an ethylene-vinyl polymer, and the balance fatty acid ketone.

4,064,084

CORROSION-INHIBITING POLY(ARYLENE SULFIDE) COATING COMPOSITIONS

Jennings P. Blackwell, Bartlesville, Okla., assignor to Phillips Petroleum Company, Bartlesville, Okla.

Filed Apr. 2, 1973, Ser. No. 346,834

Int. Cl.^{2} C09D *5/08;* **C08L** *81/04*

U.S. Cl. 260—29.2 R **1 Claim**

1. A corrosion-inhibiting poly(phenylene sulfide) coating composition which, when coated upon iron or iron alloy substances and baked, will yield a poly(phenylene sulfide) coating with improved adhesion and smoothness which comprises:

a. a normally solid poly(phenlene sulfide) resin composition,

b. about 0.5 to about 30 parts by weight of sodium nitrite per hundred parts by weight of said poly(phenylene sulfide) resin, and

c. about 60 to about 900 parts by weight of a mixture of propylene glycol and water per hundred parts by weight of said poly(phenylene sulfide) resin.

4,064,085

PROCESS FOR PRODUCING CATIONIC LATEXES

Yujiro Kosaka; Hideaki Nakazawa, both of Yokohama; Tetsuo Iikuni, and Mitsumasa Akashi, both of Shinnanyo, all of Japan, assignors to Toyo Soda Manufacturing Co., Ltd., Shinnanyo, Japan

Filed Nov. 6, 1975, Ser. No. 629,445

Claims priority, application Japan, Nov. 6, 1974, 49-127059

Int. Cl.^{2} C08L *9/10*

U.S. Cl. 260—29.7 R **6 Claims**

1. In a process for producing cationic latexes by the emulsion polymerization of a conjugated diene or a conjugated diene plus less than 50% by weight of the total monomer weight of a comonomer copolymerizable with the conjugated diene, the improvement wherein the polymerization is carried out in the presence of a cationic emulsifier comprising:

at least one member selected from the group consisting of

a. an organic or inorganic acid or salt as of β-hydroxyalk-

ylpolyamine or a β-hydroxymethylalkylpolyamine of the general formula:

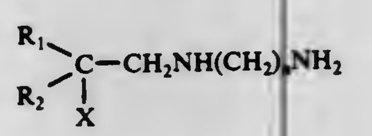

or

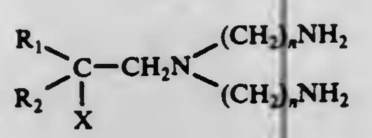

in which X stands for a hydroxyl or hydroxymethyl group, R_1 stands for a hydrogen atom or an alkyl group of 1 to 20 carbon atoms, R_2 stands for a hydrogen atom or an alkyl group of 1 to 20 carbon atoms, the total sum of the carbon atoms of $R_1 + R_2$ is 8 to 20, and n stands for an integer of 1 to 3;

b. an ethylene oxide adduct, a propylene oxide adduct or an ethylene oxide/propylene oxide adduct of β-hydroxyalkylpolyamine or β-hydroxymethylalkylpolyamine; and

c. an organic or inorganic acid salt of said oxide adducts; and in the presence of colloidal alumina.

4,064,086

THERMOPLASTIC HYDROGELS

Donald Roy Cowsar, Birmingham, and Albert Charles Tanquary, Vestavia Hills, both of Ala., assignors to National Patent Development Corporation, New York, N.Y.

Filed July 13, 1976, Ser. No. 704,888

Int. Cl.² C08G *63/08*

U.S. Cl. 260—29.2 R **40 Claims**

1. A thermoplastic hydrophilic polymer having hydroxyl groups and capable of forming a hydrogel, said polymer being a condensation product of (1) a spirolactone of the formula:

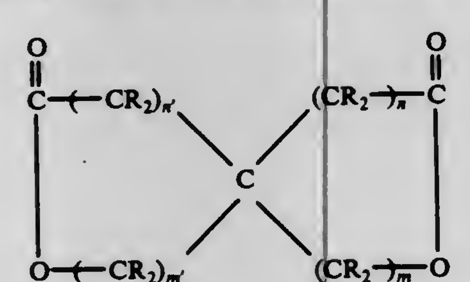

where the total of n and m is 2 to 5 and the total of n' and m' is 2 to 5 and the R groups are H or hydrocarbyl with the proviso that not over 3 R groups are hydrocarbyl with (2) a difunctional compound having two groups capable of opening the lactone ring which groups are selected from the group consisting of primary amino, secondary amino, alcoholic hydroxy and phenolic hydroxyl, (1) and (2) being employed in the range of 0.1 to 1 mole of (1) with 1 to 0.1 mole of (2).

4,064,087

METHOD FOR PREPARING POLYMERS IN AQUEOUS MEDIUM

Suryya K. Das, Pittsburgh, Pa., assignor to PPG Industries, Inc., Pittsburgh, Pa.

Filed Jan. 5, 1976, Ser. No. 646,722

Int. Cl.² C08L *33/08*

U.S. Cl. 260—29.6 RB **14 Claims**

1. A method of producing a polymer in an aqueous medium which comprises addition polymerizing the monomer or monomers from which the polymer is formed in the absence of buffers and polymerization initiators which form water-soluble inorganic salts and in the presence of a non-salt forming free radical organic polymerization initiator or a salt or partial salt of an acid-containing polymer containing one or more pendent double bonds.

4,064,088

PROCESS FOR THE MANUFACTURE OF UREA-FORMALDEHYDE CONDENSATION POLYMERS CONTAINING SULPHO GROUPS

Alfred Renner, Munchenstein, Switzerland, assignor to Ciba-Geigy AG, Basel, Switzerland

Division of Ser. No. 576,938, May 12, 1975, Pat. No. 4,010,132. This application Sept. 10, 1976, Ser. No. 722,331

Claims priority, application Switzerland, June 7, 1974, 7809/74

Int. Cl.² C08L *61/34;* **C08G** *14/08*

U.S. Cl. 260—29.3 **5 Claims**

1. In a process for the manufacture of urea-formaldehyde condensation products the improvement according to which highly disperse, solid urea-formaldehyde condensation products are formed which contain sulpho groups and consist of compact, spherical, agglomerated primary particles having a diameter of less than 1 μm, the process comprising polycondensing a precondensate (P) of urea and formaldehyde said precondensate being a cocondensate in which up to one-third of the urea is replaced by the corresponding molar amount of a comonomer selected from the group consisting of phenol, resorcinol, a cresol, salicylic acid, an acid amide, biuret, a hydantoin and a mixture thereof and a condensation polymer (N) of naphthalenesulphonic acid and formaldehyde in aqueous solution at temperatures of 20° to 100° C to form a gel, the components being added in such ratio that the molar ratio of formaldehyde to urea and the comonomer in the reaction mixture at the moment of gelling is 1.25 to 2, these molar ratios taking into account both the free starting products, formaldehyde, urea and comonomer, and the monomeric starting products chemically bound in the intermediate products.

4,064,089

ACCELERATED MELAMINE-ALDEHYDE RESIN AND METHOD OF MAKING A FAST-CURING LAMINATE THEREWITH

Joseph F. Meier, Export, Pa., assignor to Westinghouse Electric Corporation, Pittsburgh, Pa.

Filed May 24, 1973, Ser. No. 363,775

Int. Cl.² C08G *12/32;* **C08L** *61/28*

U.S. Cl. 260—29.4 R **15 Claims**

1. A method of accelerating the cure of a resin consisting essentially of melamine and an aldehyde comprising mixing a solution of said resin having a pH between 7 and 9 with about 0.001 to about 2% (based on said resin) of a free-radical generator soluble in said resin before curing said resin.

4,064,090

AQUEOUS COATING COMPOSITION OF EPOXY-AMINE ADDUCT AND AN ACID WITH CROSS-LINKER

David Vincent Gibson, North Bayswater, and Bruce Leary, Frankstone, both of Australia, assignors to Dulux Australia Ltd., Australia

Continuation of Ser. No. 471,954, May 21, 1974, abandoned. This application Jan. 23, 1976, Ser. No. 651,780

Claims priority, application Australia, June 4, 1973, 3548/73

Int. Cl.² C08L *61/24;* **C25D** *13/06*

U.S. Cl. 260—29.4 R **7 Claims**

1. An aqueous coating composition comprising a dispersion in water of an ionizable salt of an epoxy-amine adduct and an acid together with a cross-linking agent for the adduct, characterized in that the ionizable salt consists of the combination of an acid and an epoxy-amine adduct selected from the compounds of the formulae

$$B_1 - A_1 - C_1 - A_2 - B_2 \qquad (a)$$

and

$$B_1 - A_1 - C_1 - A_2 - C_2 - A_3 - B_2 \qquad (b)$$

A_1 A_2 and A_3 are epoxy free residues of essentially straight-chain di-epoxides;

B_1 and B_2 are residues of secondary mono-amines which have a pK_b value of 4 maximum;

C_1 and C_2 are residues of amines selected from the group consisting of methylamine, ethylamine, n-propylamine, iso-propylamine, n-butylamine, phenylamine, benzylamine, ortho-toluidine, metal-toluidine, para-toluidine, ethanolamine, ethylene diamine, hexamethylene diamine, n-propyldiamine, orthophenylene diamine, metaphenylenediamine, para-phenylene diamine and triethylene tetramine.

4,064,091

PROCESS OF FORMING A POLYMERIC EMULSION WHICH COMPRISES COPOLYMERIZING IN AQUEOUS DISPERSION AN ETHYLENICALLY-UNSATURATED MONOMER CONTAINING QUATERNARY NITROGEN

Carlos M. Samour, Wellesley Hills, and Mildred C. Richards, Wakefield, both of Mass., assignors to The Kendall Co., Walpole, Mass.

Continuation of Ser. No. 496,324, Aug. 9, 1974, abandoned, which is a division of Ser. No. 272,282, July 17, 1972, abandoned, which is a division of Ser. No. 867,899, Oct. 20, 1969, Pat. No. 3,780,092. This application Dec. 19, 1975, Ser. No. 642,263

Int. Cl.² C08L *33/14*

U.S. Cl. 260—29.6 HN **4 Claims**

1. The process of forming a self-stabilized surfactant-free polymeic emulsion of a water-insensitive polymer which comprises

copolymerizing in aqueous dispersion in the absence of surfactants or dispersing agents between 99% and 95% by weight of an ethylenically-unsaturated monomer, within between 1% and 5% of a monomer selected from the class represented by the formula

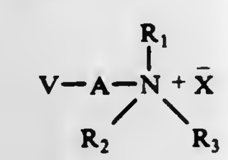

wherein V is an acrylic ester or acrylamido group represented by the formulas $CH_2{=}CR_4{-}COO{-}$ and $CH_2{=}CR_4{-}CONH{-}$, where R_4 is H or CH_3;

A is an alkylene or substituted alkylene group selected from the class consisting of $-CH_2.CH_2-$, $-CH_2.CH_2.CH_2-$, $-CH_2.CHOH.CH_2-$, and $-CH_2.CH(CH_3)-$ groups; and wherein the quaternary nitrogen group $-N\ R_1R_2R_3$ is selected from the class consisting of:

a. aliphatic tertiary amines wherein R_1 is an alkyl group of from 1 to 7 carbon atoms; R_2 is an alkyl group of from 1 to 7 carbon atoms or a benzyl group; R_3 is selected from the class consisting of saturated aliphatic hydrocarbon groups of from 7 to 28 carbon atoms and benzyl groups substituted with a saturated aliphatic hydrocarbon group of from 7 to 28 carbon atoms;

b. groups in which N, R_1, and R_2 together from a heterocyclic tertiary amine of the general formula:

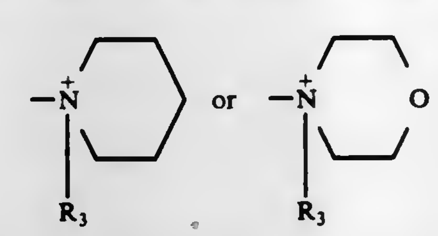

and R_3 is a saturated aliphatic hydrocarbon group of from 7 to 28 carbon atoms,

and where X^- is selected from the class consisting of F^-, Cl^-, Br^-, I^-, $CH_3SO_4^-$, $C_2H_5SO_4^-$, and

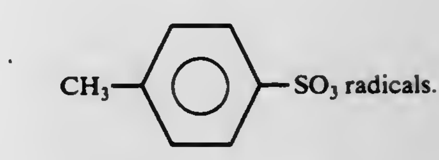

4,064,092

COATING COMPOSITION

Gary L. Burroway, Doylestown, and Michael J. Maximovich, Akron, both of Ohio, assignors to The Goodyear Tire & Rubber Company, Akron, Ohio

Continuation of Ser. No. 520,829, Nov. 4, 1974, abandoned. This application Apr. 28, 1976, Ser. No. 680,818

Int. Cl.² C08F *6/14, 220/06, 222/02*

U.S. Cl. 260—29.6 PM **7 Claims**

1. A coating composition which comprises an aqueous dispersion or solution prepared by (i) mixing and reacting sufficient amount of a volatile amine with a water reducible composition comprised of an admixture or solution of (a) a solid, particulate resin, (b) coalescing solvent and (c) plasticizer and (ii) mixing sufficient water therewith to form a stable dispersion or solution of said composition having a pH in the range of about 8 to about 14, where said water reducible composition comprises an admixture or solution of 100 parts of the solid resin with about 50 to about 100 parts by weight of a coalescing solvent therefor comprising at least one solvent selected from ethylene glycol monomethyl ether, ethylene glycol monoethyl ether, ethylene glycol monobutyl ether, diethylene glycol monobutyl ether, diethylene glycol monoethyl ether acetate, diethylene glycol diethyl ether, ethylene glycol monomethyl ether acetate, methyl ethyl ketone, acetone, methyl propyl ketone and diacetone alcohol and about 5 to about 70 parts by weight of at least one compatible plasticizer characterized by having a melting point of about −40° C. to about 25° C., a boiling point of at least 95° C. and a solubility parameter of about 8 to about 16, where said resin has a Ring and Ball softening point in the range of about 100° C. to about 300° C. and is prepared by the method which comprises (A) free radical aqueous emulsion polymerizing, in an aqueous medium having a pH in the range of about 2 to about 7, or free radical organic solution polymerizing a monomer mixture which comprises, based on 100 weight percent of monomers

A. about 70 to about 85 weight percent of at least one hard segment hydrophobic enhancing monomer selected from styrene, α-methyl styrene, acrylonitrile, vinyl toluene, methyl methacrylate, vinyl chloride and vinylidene chloride,

B. about 15 to about 25 weight percent of at least one soft segment hydrophobic enhancing monomer selected from at least one acrylate selected from methyl acrylate, ethyl acrylate, butyl acrylate, 2-ethylhexyl acrylate, laural acrylate, isodecyl methacrylate, butyl methacrylate, isobutyl methacrylate, at least one vinyl ether selected from ethyl, butyl, octyl, decyl, and cetyl vinyl ether and/or at least one diene selected from 1,3-butadiene, isoprene and 2,3-dimethyl butadiene, provided that said dienes of monomer part (B) and said monomer part (A) vinyl chloride and vinylidene chloride are not mixed together and copolymerized, and

C. about 3 to 10 weight percent of at least one hydrophilic enhancing organic acid selected from acrylic, methacrylic, fumaric, itaconic and maleic acid,

and (B) recovering said resin from the emulsion as a hard, particulate, resin and where said volatile amine is selected from primary, secondary and tertiary amines having a melting point in the range of about −40° C. to about 25° C. and a boiling point in the range of about 50° C. to about 150° C.

4,064,093

PROCESS FOR PREPARING GRAFTED RUBBER LATICES FREE OF COAGULUM

William O. Dalton, Hampden, Mass., and Glenn B. Hilton, Enfield, Conn., assignors to Monsanto Company, St. Louis, Mo.

Filed Sept. 22, 1976, Ser. No. 725,910

Int. Cl.[2] C08L *51/04*

U.S. Cl. 260—29.7 PT **19 Claims**

1. In a process for filtering coagulum from a latex comprising grafted rubber particles for ABS polyblends wherein said latex is passed through a filter bed medium, the improvement comprising:

coagulating a portion of said latex as agglomerated particles comprising said grafted rubber particles, and separating said agglomerated particles from said latex,

preparing a porous filter bed means comprising said particles wherein said particles have a particle size such that the interstices between said particles are sized to pass said latex rubber particles and retain said coagulum, and

passing said latex containing said grafted rubber particles through said filter bed means removing said coagulum and providing a filtered latex.

4,064,094

SPRAYABLE-PRESSURE SENSITIVE ADHESIVE COMPOSITION

Raymond E. Downey, Akron, Ohio, assignor to The Goodyear Tire & Rubber Company, Akron, Ohio

Continuation of Ser. No. 421,293, Dec. 3, 1973, abandoned. This application Aug. 27, 1975, Ser. No. 608,126

Int. Cl.[2] C08K *5/05, 5/07;* **C08L** *9/06;* **C09J** *3/14*

U.S. Cl. 260—32.8 A **3 Claims**

1. A sprayable pressure-sensitive adhesive mixture which comprises a dispersion consisting essentially of both (A) about 30 to about 70 weight percent of a thermoplastic hydrocarbon derived resin having a softening point in the range of about 80° C. to about 110° C. comprising about 35 to about 65 parts by weight units derived from piperylene and correspondingly about 65 to about 35 parts by weight units derived from 2-methyl-2-butene, and correspondingly, (B) about 70 to about 30 weight percent of a styrene-isoprene-styrene unvulcanized elastomeric block copolymer, based on resin and block copolymer, in (C) about 80 to about 95 weight percent, based on the total mixture, of a volatile liquid organic dispersant selected from ketones and alcohol/ketone mixtures containing from about 0 to about 5 weight percent alcohol; where said ketones are selected from at least one of the group consisting essentially of methyl ethyl ketone, methyl isobutyl ketone and diisobutyl ketone, where said alcohols are selected from at least one of the group consisting essentially of methanol, ethanol and isopropanol, where said block copolymer comprises blocks consisting of about 10 to about 50 weight percent styrene polymer blocks having an average molecular weight of about 2,000 to about 100,000 and a glass transition temperature of above 25° C., and the isoprene polymer block having an average molecular weight of about 25,000 to about 1 million and a glass transition temperature below about 10° C., with the difference between said transition temperatures being at least about 40° C., said copolymer having an ultimate tensile strength at 25° C., in excess of 200 pounds per square inch, and where said thermoplastic resin is prepared by polymerizing a mixture comprised of about 20 to about 75 weight percent piperylene and correspondingly about 80 to about 25 weight percent 2-methyl-2-butene in the presence of aluminum chloride.

4,064,095

POLY(PHOSPHAZENE) COMPOSITIONS

Arthur Eugene Oberster, North Canton, and David Francis Lawson, Akron, both of Ohio, assignors to The Firestone Tire & Rubber Company, Akron, Ohio

Filed July 15, 1976, Ser. No. 705,497

Int. Cl.[2] C08L *79/00*

U.S. Cl. 260—37 R **9 Claims**

1. Filled poly(phosphazene) compositions exhibiting enhanced flame resistance and lower smoke output as compared to otherwise similar poly(phosphazene) compositions which have not been compounded with the specific filler hereinafter defined, consisting essentially of:

at least one flame resistant poly(phosphazene); and

at least one filler selected from the group consisting of compounds of Mg which compounds decompose endothermically when heated and release CO_2 or H_2O when they decompose and which are selected from the group consisting of carbonates, bicarbonates, hydroxides and hydrated oxides of Mg, said filler being present in said composition in a weight at least approximately equal to the weight of said polyphosphazene.

4,064,096

CURABLE, STORAGE-STABLE LIQUID ORGANOPOLYSILOXANE COMPOSITIONS

Andre Gibard, Venissieux, France, assignor to Rhone-Poulenc Industries, Paris, France

Filed Feb. 9, 1976, Ser. No. 656,735

Claims priority, application France, Feb. 10, 1975, 75.04046

Int. Cl.[2] C08L *83/04*

U.S. Cl. 260—37 SB **16 Claims**

1. A method for the formulation of a curable, storagestable liquid organopolysiloxane composition of matter, which method comprises admixing for at least two hours at a temperature of less than about 60° C. (a) 100 parts by weight of a diorganopolysiloxane oil having a viscosity ranging from between 400 and 3,000 cps at 25° C. wherein the organo radicals comprising the said diorganopolysiloxane are selected from the group consisting of methyl, vinyl and phenyl and are at least 40% methyl, up to 58% phenyl and up to 2% vinyl, said diorganopolysiloxane being terminated at its chain ends with a moiety selected from the group consisting of $(CH_3)_3SiO_{0.5}$, $(CH_3)_2CH_2{=}CHSiO_{0.5}$ and $(CH_3)_2C_6H_5SiO_{0.5}$, with (b) 30 to 75 parts by weight of silica having a specific surface area in excess of 80 m²/g, (c) 1.5 to 7 parts by weight of water, and (d) 4 to 18 parts by weight of a Si-N bonded silylating agent selected from the group consisting of $R(CH_3)_2SiNH\text{-}Si(CH_3)_2R$ and $R(CH_3)_2SiNHR'$, wherein each R is either the same or different and is methyl, ethyl, vinyl or phenyl, and R' is methyl or ethyl; next devolatilizing the mixture at a temperature of from about 70° C. to 200° C. under a pressure no greater than atmospheric; and thence admixing with the devolatilized product, 45 to 120 parts of (e) an α,ω-dihydroxypolysiloxane oil having a viscosity ranging from between 2,000 and 60,000 cps at 25° C. and 25 to 120 parts by weight of (f) a filler which is a silica having a specific surface area of less than 50 m²/g.

4,064,097

ANTIFRICTION POLYMER MATERIAL

Vasily Vladimirovich Korshak, ulitsa Gubkina, 4, kv. 81; Irina Alexandrovna Gribova, ulitsa Vavilova, 12, kv. 31; Alexandr Petrovich Krasnov, prospekt Kalinina, 31, kv. 28; Mikhail Mikhailovich Teplyakov, ulitsa Gastello, 37, kv. 3, all of Moscow; Georgy Vasilievich Elerdashvili, ulitsa Barnova, 137, kv. 66, Tbilisi; Galina Ilinichna Gureeva, ulitsa Molostovykh, 11, korpus 5, kv. 18, Moscow; Valery Panteleimonovich Chebotarev, Zheleznodorozhny, ulitsa Dachnaya, 28, kv. 7, Moskovskaya oblast; Raisa Alexeevna Dvorikova, ulitsa Sofii Kovalevskoi, 8, kv. 19, Moscow; Vladimir Alexandrovich Sergeev, ulitsa Profsojuznaya, 54, korpus 4, kv. 26, Moscow, and Dali Mitrofanovna Kakauridze, 1 Baltiisky pereulok, 6/21, korpus 5, kv. 7, Moscow, all of U.S.S.R.

Filed Feb. 25, 1976, Ser. No. 661,244

Int. Cl.[2] C08L *65/02*

U.S. Cl. 260—37 R **5 Claims**

1. An antifriction polymer material which is a product of hardening a composition consisting of a filler comprising a solid lubricant, fibrous material, metallic powder and friction regulating additives, in an amount of 10–95 wt.% and a binder in an amount of 5–90 wt.%, a mixture of polyphenylenes being used as a binder containing functional groups selected from ketal or acetyl groups, of the formula

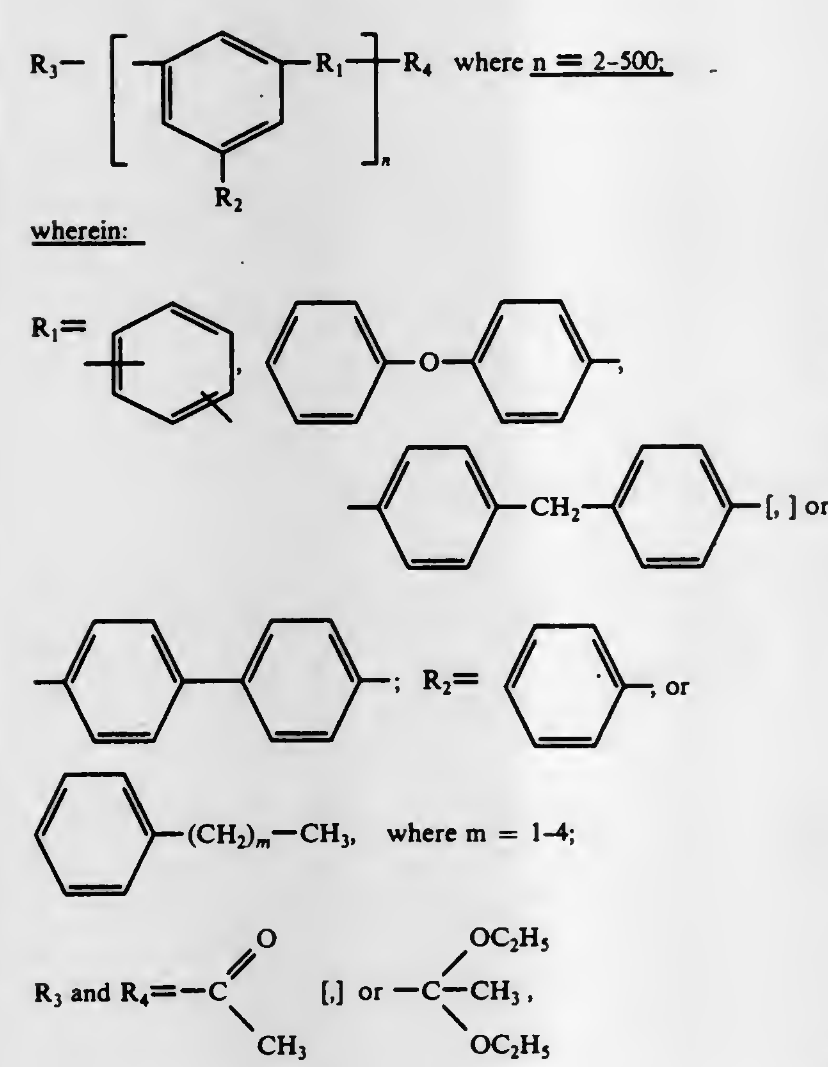

R_3 and R_4 being identical or different; the fraction with $n = 2–15$ amounting to 4–20% of the binder weight.

4,064,098

GLASS FIBER-REINFORCED POLY(TETRAMETHYLENE TEREPHTHALATE) RESIN COMPOSITION

Seiichiroh Saitoh, Ohtake; Masatoshi Kashiwagi, Waki, and Toshiaki Marubayashi, Suita, all of Japan, assignors to Mitsui Petrochemical Industries Ltd., Tokyo, Japan

Filed Oct. 27, 1976, Ser. No. 736,146

Claims priority, application Japan, Oct. 27, 1975, 50-128349

Int. Cl.[2] C08K *3/40*

U.S. Cl. 260—40 R **8 Claims**

1. A glass fiber-reinforced polyester resin composition consisting of:

A. about 55 to about 95% by weight, based on the total weight of (A) and (B), of poly(tetramethylene terephthalate) resin composed of a dicarboxylic acid component unit at least 90 mole% of which consists of terephthalic acid and a glycol component unit at least 90 mole% of which consists of tetramethylene glycol,

B. about 45 to about 5% by weight, based on the total weight of (A) and (B), of a copolyester resin composed of a dicarboxylic acid component unit at least 90 mole% of which consists of terephthalic acid and a unit of a mixed glycol consisting of an ether glycol of the formula $HO(CH_2CH_2O)_nH$ wherein n is an integer of 2 to 6, and a monoalkylene glycol containing not more than 6 carbon atoms, the amount X in mole% of the ether glycol being expressed by the formula $12/n \leqq X \leqq 150/n$ wherein n is the same as defined above, and the amount of the monoalkylene glycol being (100 − X) mole%,

C. about 10 to about 50 parts by weight, per 100 parts by weight of the sum of (A) and (B), of glass fibers, and

D. up to about 50 parts by weight, per 100 parts by weight of the sum of (A) and (B), of an additive.

4,064,099

THERMOPLASTIC RESIN COMPOSITION HAVING A PEARLY LUSTER

Ryoji Odate, Yokohama, and Kazuo Haneda, Ageo, both of Japan, assignors to Shiseido Company, Ltd., Tokyo, Japan

Filed June 6, 1975, Ser. No. 584,675

Claims priority, application Japan, June 6, 1974, 49-64349; Oct. 8, 1974, 49-115896

Int. Cl.[2] C08L *33/20;* **C08K** *7/14*

U.S. Cl. 260—42.18 **7 Claims**

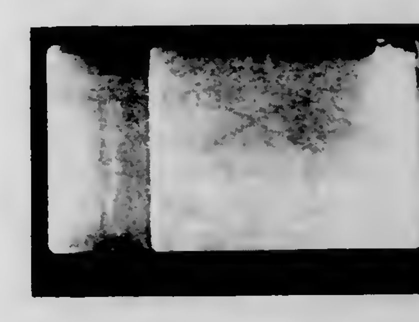

1. A thermoplastic resin composition having a pearly luster consisting of about 30 to 70% by weight of polymethyl metachrylate and about 70 to 30% by weight of a styrene-acrylonitrile copolymer having an acrylonitrile content of about 25 to 32% by weight.

4,064,100
FRIABLE DISTEARYL PENTAERYTHRITOL DIPHOSPHITE

Ingenuin Hechenbleikner, West Cornwall, Conn., assignor to Weston Chemical Co., Inc., Montvale, N.J.
Continuation of Ser. No. 598,166, July 22, 1975, abandoned, which is a continuation of Ser. No. 203,034, Nov. 29, 1971, abandoned. This application June 18, 1976, Ser. No. 697,637
Int. Cl.² C07F *9/09;* **C08K** *5/32*
U.S. Cl. 260—45.8 R **23 Claims**

1. A composition comprising distearyl pentaerythritol diphosphite in friable form, said composition consisting essentially of the product prepared by either (1) reacting diphenyl pentaerythritol diphosphite with stearyl alcohol in a molar excess of 10 to 100 molar % or (2) reacting pentaerythritol, triphenyl phosphite and stearyl alcohol, the stearyl alcohol being employed in a molar excess of 10 to 100 molar % of that required to form distearyl pentaerythritol diphosphite.

15. A composition of matter comprising a polymer selected from the group consisting of halogen containing polymers and olefin polymers having incorporated therein the composition of claim 1 as a stabilizer therefore.

4,064,101
FLAME RETARDANT POLYCARBONATE COMPOSITION

Victor Mark, Evansville, Ind., assignor to General Electric Company, Pittsfield, Mass.
Continuation-in-part of Ser. No. 429,127, Dec. 28, 1973, Pat. No. 3,953,399. This application Mar. 26, 1976, Ser. No. 670,680
Int. Cl.² C08K *5/42*
U.S. Cl. 260—45.85 H **10 Claims**

1. A flame retardant aromatic carbonate polymer composition comprising in admixture an aromatic carbonate polymer and a minor amount of a metal salt of a mixture of monomeric and polymeric substituted and unsubstituted sulfonic acids of aromatic carboxylic acids and esters, or a metal salt of a polymeric substituted and unsubstituted sulfonic acids of aromatic carboxylic acids and esters, wherein said metal salts thereof are selected from the group consisting of alkali metals and alkali earth metals, and mixtures of these salts and said substituent on the metal salt of the substituted sulfonic acids of aromatic carboxylic acids and esters is selected from the group consisting of an electron withdrawing radical and mixtures of electron withdrawing radicals.

4,064,102
LIGHT AND HEAT STABILIZERS FOR POLYOLEFINS

Ray Leonard Hillard, Annandale, and William Baptist Hardy, Bound Brook, both of N.J., assignors to American Cyanamid Company, Stamford, Conn.
Filed Mar. 18, 1976, Ser. No. 668,156
Int. Cl.² C07D *211/62, 401/02;* **C08K** *5/34*
U.S. Cl. 260—45.8 N **9 Claims**

1. A compound represented by the formula:

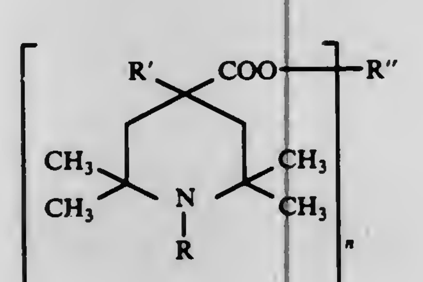

wherein R is hydrogen or alkyl (C_1–C_8), R′ is hydrogen, or lower alkoxy (C_1–C_8); R″ is alkylene (C_2–C_{12}), cycloalkylene, wherein the alicyclic ring may contain lower alkyl substituents, arylene or aralkylene, *n* is 2.

4,064,103
POLYBUTYLENE TEREPHTHALATE MOLDING COMPOSITIONS WHICH ARE RESISTANT TO HEAT-AGING

Claus Cordes, Weisenheim, and Hans-Josef Sterzel, Dannstadt-Schauernheim, both of Germany, assignors to BASF Aktiengesellschaft, Ludwigshafen, Germany
Filed Apr. 19, 1976, Ser. No. 677,921
Claims priority, application Germany, May 23, 1975, 2522901
Int. Cl.² C08K *5/29*
U.S. Cl. 260—45.9 D **2 Claims**

1. A stabilized polybutylene terephthalate molding composition wherein the stabilizer is a carbodiimide selected from the group consisting of 2,2′-dimethyl-4,4′-dinitrodiphenylcarbodiimide, 2,2′,6,6′-tetrachlorodiphenylcarbodiimide and 2,2′-dinitro-4,4′-dichlorodiphenylcarbodiimide, and the amount of said carbodiimide is from 0.1 to 5 percent by weight, based on polybutylene terephthalate.

4,064,104
PHOSPHINE OXIDE FLAME RETARDANTS

Joseph J. Mrowca, Wilmington, Del., assignor to E. I. Du Pont de Nemours and Company, Wilmington, Del.
Division of Ser. No. 552,868, Feb. 25, 1975, abandoned, which is a continuation-in-part of Ser. No. 416,597, Nov. 16, 1973, Pat. No. 3,895,074. This application Nov. 15, 1976, Ser. No. 741,723
Int. Cl.² C08K *5/16*
U.S. Cl. 260—45.9 NP **6 Claims**

1. A flame-retardant compound having the formula

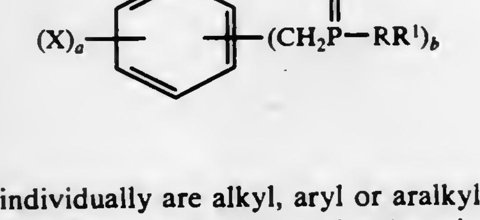

wherein

R and R¹ individually are alkyl, aryl or aralkyl of up to 10 carbon atoms having up to 5 chlorine, bromine or fluorine atoms;

X is SO_2NH_2, SO_2NHR or SO_2NR_2, R being as defined above;

a is 1 to 4; *b* is 2 to 5; and $a + b$ is 3 to 6.

3. A flame-retardant composition comprising a polymer selected from the group consisting of a polyolefin, polyester and polyamide and 1–25% by weight, based on the said polymer, of a compound of claim 1.

4,064,105
PLASTIC COMPOSITIONS

Arnold L. Anderson, Antioch, Ill., assignor to Velsicol Chemical Corporation, Chicago, Ill.
Continuation-in-part of Ser. No. 330,840, Feb. 8, 1973. This application May 17, 1976, Ser. No. 686,791
The portion of the term of this patent subsequent to Apr. 5, 1994, has been disclaimed.
Int. Cl.² C08G *5/06*
U.S. Cl. 260—45.75 B **15 Claims**

1. A plastic composition comprising a three component system consisting of (1) nylon polymer, (2) a bis-phenoxy compound, which functions as a flame retardant for said composition, having the formula

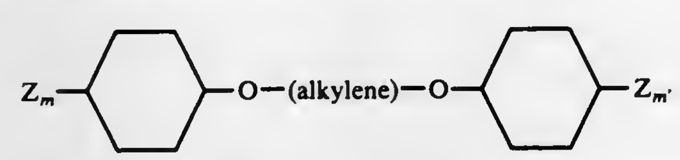

wherein (a) Z is bromine; (b) *m* and *m′* are independent and are integers having a value of 5 and (c) alkylene is $—(CH_2)_2—$ and (3) a flame retardant enhancing agent.

4,064,106
POLYMERS STABILIZED BY ESTERS OF PHOSPHINODITHIOIC ACIDS

Joseph Anthony Stretanski, Clinton, and Vincent Gerard Grosso, Piscataway, both of N.J., assignors to American Cyanamid Company, Stamford, Conn.
Filed Nov. 25, 1975, Ser. No. 635,184
Int. Cl.² C08K *5/50*
U.S. Cl. 260—45.95 C **26 Claims**

1. A polymeric composition stabilized against degradation by ultraviolet light by an effective amount of a compound of the formula:

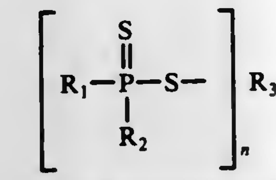

wherein R_1 and R_2 are selected from alkyl; cycloalkyl; alkyl substituted by hydroxy, alkoxy, cyano, chloro, bromo, or fluoro; aryl; aralkyl; aryl and aralkyl substituted by one or two lower alkyl, lower alkoxy, hydroxy, or halogen on the aryl moiety thereof; *n* is 1 or 2; and, when *n* is 1, R_3 is selected from alkyl; cycloalkyl; alkyl substituted by hydroxy, alkoxy, cyano, chloro, bromo, or fluoro; alkylthioalkyl; aralkyl; aryl; aralkylthioalkyl; and aralkyl, aryl, or aralkylthioalkyl substituted by one or two lower alkyl, lower alkoxy, hydroxy, or halogen on the aryl moiety thereof, and, when *n* is 2, R_3 is selected from alkylene; hydroxyalkylene; oxybis and thiobis(alkylene); arylene; or arylene substituted by lower alkyl, lower alkoxy, hydroxy, or halogen.

4,064,107
HIGH TEMPERATURE POLYUREA RESINS

Robert W. Stackman, Morristown, and Anthony B. Conciatori, Chatham, both of N.J., assignors to Celanese Corporation, New York, N.Y.
Filed Aug. 12, 1976, Ser. No. 713,723
Int. Cl.² C08G *71/02*
U.S. Cl. 260—47 CB **12 Claims**

1. A polyurea resin which consists essentially of the condensation polymerization product of p,p′-bis(4-aminophenoxy)-diphenyl ether with tolylene diisocyanate.

4,064,108
NOVEL POLYESTERS PREPARED FROM MIXTURE OF HYDROQUINONE AND BISPHENOLS

Hiroo Inata, and Shoji Kawase, both of Iwakuni, Japan, assignors to Teijin Limited, Osaka, Japan
Continuation-in-part of Ser. No. 619,495, Oct. 3, 1975. This application July 26, 1976, Ser. No. 708,756
Claims priority, application Japan, Oct. 4, 1974, 49-113730; Feb. 8, 1975, 50-15902; Apr. 25, 1975, 50-49782; Aug. 22, 1975, 50-101118
Int. Cl.² C08G *63/18, 63/60, 63/68*
U.S. Cl. 260—47 C **6 Claims**

1. A linear copolyester having (1) a reduced specific viscosity of at least 0.5, measured at 35° C using a mixed solvent consisting of phenol and tetrachloroethane in a weight ratio of 60:40 while maintaining a concentration of 1.2 g/deciliter for the copolyester, and (2) a light transmittance retention of at least 50% after immersion for 1 day in acetone at room temperature,

said copolyester comprising

a. an ester unit derived from at least one aromatic dicarboxylic acid selected from the group consisting of terephthalic acid and isophthalic acid, and hydroquinone, and

b. an ester unit derived from at least one aromatic dicarboxylic acid selected from the group consisting of terephthalic acid and isophthalic acid, and a bisphenol of the formula

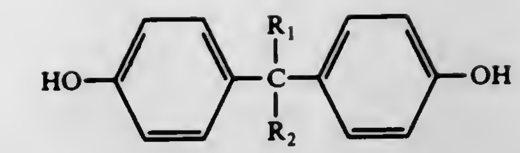

wherein

R_1 and R_2, independently of each other, represent alkyl containing 1 to 6 carbon atoms, and may be linked to each other,

the proportion of said ester unit (a) being 5 to 35 mole % based on the total of ester units (a) and (b).

4,064,109
PERFLUOROALKYLENE ETHER BIBENZOXAZOLE POLYMERS

Robert C. Evers, Dayton, Ohio, assignor to The United States of America as represented by the Secretary of the Air Force, Washington, D.C.
Filed July 30, 1976, Ser. No. 710,088
Int. Cl.² C08G *73/22*
U.S. Cl. 260—61 **6 Claims**

1. A polymer composition consisting essentially of recurring units having the following formula:

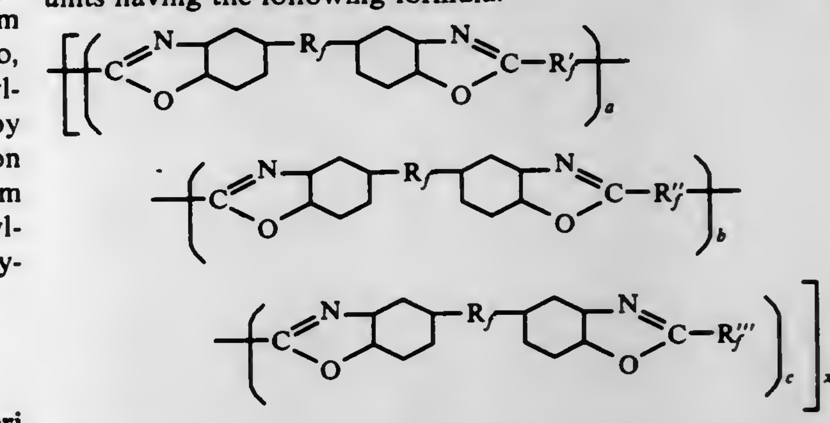

wherein R_f is

$(CF_2)_2O(CF_2)_5O(CF_2)_2$, $(CF_2)_2O(CF_2)_2O(CF_2)_2O(CF_2)_5O(CF_2)_2$, or

$(CF_2)_2OCF_2\underset{\underset{CF_3}{|}}{C}FO(CF_2)_2O\underset{\underset{CF_3}{|}}{C}FCF_2O(CF_2)_2$;

R_f' is $\underset{\underset{CF_3}{|}}{C}F(OCF_2\underset{\underset{CF_3}{|}}{C}F)_mO(CF_2)_5O(\underset{\underset{CF_3}{|}}{C}FCF_2O)_n\underset{\underset{CF_3}{|}}{C}F$,

where m+n equals 4 or 5;

R_f'' is $\underset{\underset{CF_3}{|}}{C}FO(CF_2)_5O\underset{\underset{CF_3}{|}}{C}F$; R_f''' is $\underset{\underset{CF_3}{|}}{C}FOCF_2\underset{\underset{CF_3}{|}}{C}FO(CF_2)_4$;

a is 1 when *b* and *c* are each zero; *b* is 0.7 and *c* is 0.3 when *a* is zero; and *x* is an integer having a value such that the polymer has an inherent viscosity from 0.10 to 1.0 when measured at 25° C as a 0.2 weight percent solution in hexafluoroisopropanol.

4,064,110
PROCESS FOR THE PRODUCTION OF AUTOCROSSLINKABLE POLYMERS CONTAINING N-ALKOXYMETHYL GROUPS

Dieter Arlt, and Josef Bremen, both of Cologne, Germany, assignors to Bayer Aktiengesellschaft, Germany
Filed Mar. 9, 1976, Ser. No. 665,289
Claims priority, application Germany, Mar. 12, 1975, 2510730
Int. Cl.² C08G *63/38, 18/00*
U.S. Cl. 260—75 NB **5 Claims**

1. In the process of producing a storable, auto-crosslinkable product containing N-alkoxymethyl groups which is soluble in organic solvents by reacting 5-alkoxymethyl-1,3,4-dioxazol-2-one with a polymerization, polycondensation or polyaddition product having an average molecular weight above 600 and having an average of more than one Zerewitinoff-active hydrogen atom in the molecule at a temperature of from 50–110° C with substantially complete elimination of carbon dioxide from the 5-alkoxymethyl-1,3,4-dioxazol-2-one, the improvement wherein the process is carried out in the presence of a catalytic amount of at least one alkali metal salt of a carboxylic acid.

4,064,111

METHOD FOR CONDUCTING A VAPOR-LIQUID CONTACT REACTION SEMI-BATCHWISE

Shunji Masuda; Yoshinori Oyama; Hisao Tanaka; Isao Uchigasaki, and Takehisa Sasaki, all of Hitachi, Japan, assignors to Hitachi Chemical Company, Ltd., Tokyo, Japan

Filed Aug. 25, 1975, Ser. No. 607,702

Claims priority, application Japan, Aug. 26, 1974, 49-97062

Int. Cl.[2] C08G *63/22*

U.S. Cl. 260—75 M **4 Claims**

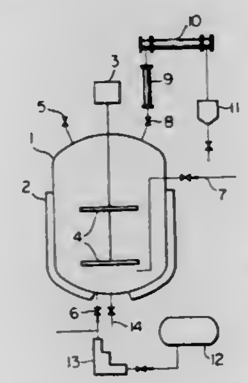

1. In a method of preparing a synthetic organic polymer by the polymerization under pressure of polymer-forming reactants, at least one of which is normally in gaseous form or is converted into gaseous form for said polymerization, in which the reactants are supplied to a reactor for semi-batchwise reaction, the improvement comprises withdrawing from said reactor a portion of the reaction liquid and mixing said withdrawn portion by means of a tubular mixer with said one reactant while the latter is in gaseous form and before its introduction into the reactor to effect liquid-vapor contact and initiate preliminary reaction therebetween, and delivering the product of said preliminary reaction to said reactor, whereby the pressure in said reactor can be reduced.

4,064,112

PROCESS FOR THE CONTINUOUS PRODUCTION OF HIGH MOLECULAR WEIGHT POLYETHYLENE TEREPHTHALATE

Hans Joachim Rothe, Maintal; Helmut Heinze, Frankfurt; Brian D. Whitehead, Friedrichsdorf, and Gunther Priepke, Nidderau, all of Germany, assignors to Zimmer Aktiengesellschaft, Frankfurt, Germany

Filed Apr. 15, 1976, Ser. No. 677,503

Claims priority, application Germany, Dec. 31, 1975, 2559290

Int. Cl.[2] C08G *63/26*

U.S. Cl. 260—75 M **13 Claims**

1. A process for the continuous production of high molecular weight polyethylene terephthalate by polycondensation in the solid phase from a dried, granulated polyethylene terephthalate, having an intrinsic viscosity of at least 0.15, which comprises crystallizing the granulate to a density of at least 1.390 g/cm3 under forced motion at a temperature of 220° C to 260° C under an inert gas atmosphere, passing the crystallized granulate at a constant or reduced temperature to a continuous fixed bed reactor, and, continuously polycondensing the crystallized granulate in said reactor while in contact with an inert gas stream at a temperature equivalent to, or lower than, the crystallization temperature.

4,064,113

AMINOPHTHALIC ANHYDRIDE COPOLYMERS

Gaetano F. D'Alelio, 2011 E. Cedar St., South Bend, Ind. 46617

Continuation-in-part of Ser. No. 370,286, June 15, 1973, abandoned. This application May 12, 1975, Ser. No. 576,469

Int. Cl.[2] C08G *69/12*

U.S. Cl. 260—78 A **16 Claims**

1. The process of preparing a film forming polyamic acid which comprises reacting an aminophthalic anhydride of the formula $H_2NC_6H_nY_{3-n}(CO)_2O$ wherein Y represents a halogen selected from the group consisting of F, Br and Cl and n represents an integer having a value of 0 to 3, in an inert organic solvent in which the polymer is soluble at a temperature of about 10-100° C with 0.5 to 0.001 mole per mole of anhydride of a compound having the formula $Ar(NH_2)_2$ in which Ar represents single, fused or heterocyclic aromatic ring, said heterocyclic ring being selected from the class consisting of pyridine, quinoline and quinoxaline or a multiplicity of such rings linked to each other directly

or by $-O-$, $-S-$, $-CO-$, $-SO_2-$, $-CR_2-$,

$-\underset{R}{N}-$, $-RC{=}CR-$, $-SiR_2-$, $-\underset{R}{C}{=}N-$, $-COO-$,

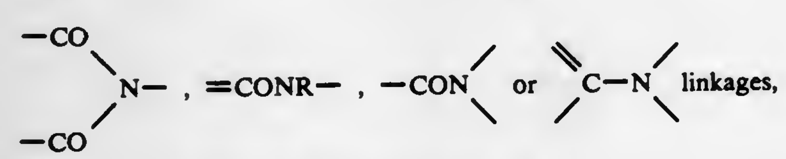

in which R represents nitrogen or a ~

in which R represents hydrocarbon group containing one to twelve carbon atoms and the remaining positions in the Ar groups being occupied by hydrogen and a halogen selected from the class consisting of F, Cl and Br.

4,064,114

PRODUCTION OF ARYLENE SULFIDE POLYMERS

James T. Edmonds, Jr., Bartlesville, Okla., assignor to Phillips Petroleum Company, Bartlesville, Okla.

Continuation-in-part of Ser. No. 581,331, May 27, 1975, abandoned. This application Jan. 19, 1976, Ser. No. 642,098

Int. Cl.[2] C08G *75/16*

U.S. Cl. 260—79.1 **26 Claims**

1. A method for producing polymers comprising:

a. forming a first composition by contacting N-alkyl-2-pyrrolidone, lithium acetate and water;

b. dehydrating said first composition to form a first dehydrated composition;

c. contacting said first dehydrated composition with a second composition containing at least about 50 weight percent water and an alkali metal sulfide to form a third composition;

d. dehydrating said third composition to form a third dehydrated composition; and

e. contacting said third dehydrated composition with a p-dichlorobenzene at polymerization conditions for a period of time sufficient to form a p-phenylene sulfide polymer.

4,064,115

BROMINATION OF POLY(ARYLENE SULFIDES)

Paul R. Stapp, and Donnie G. Brady, both of Bartlesville, Okla., assignors to Phillips Petroleum Company, Bartlesville, Okla.

Filed Aug. 2, 1976, Ser. No. 711,026

Int. Cl.[2] C08G *75/14, 75/16*

U.S. Cl. 260—79.1 **8 Claims**

1. A process for the bromination of poly(arylene sulfides) which comprises contacting (a) an arylene sulfide polymer in finely divided form having the repeating unit

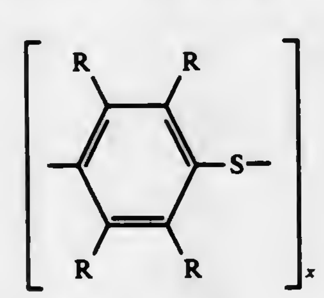

wherein R is hydrogen or an alkyl group having from 1 to 4 carbon atoms and x is an integer ranging from about 10 to about 250 with (b) a free oxygen-containing gas in the presence of (c) a catalytically effective amount of a catalyst system comprising a copper ion, an alkali metal ion, and a bromide ion under reaction conditions including a temperature, a period of time, and ratios of reactants sufficient to form the brominated arylene sulfide polymer.

4,064,116

ABS POLYMER AND PROCESS FOR ITS PREPARATION

Stelvio Papetti, Leominster, Mass., assignor to Foster Grant Co., Inc., Leominster, Mass.

Continuation-in-part of Ser. No. 168,422, Aug. 2, 1971. This application May 7, 1975, Ser. No. 575,292

Int. Cl.[2] C08F *291/02, 279/02, 279/04*

U.S. Cl. 260—880 R **18 Claims**

1. A method for graft polymerizing a mixture containing monovinyl aromatic monomer and a nitrile monomer which is acrylonitrile or methacrylonitrile onto a rubbery polymer in the form of a latex, said rubbery polymer being selected from the group consisting of polybutadiene, butadiene-styrene copolymer, butadiene acrylonitrile copolymer or mixtures thereof, said method consisting essentially of effecting the polymerization in an aqueous medium in the presence of an effective suspending agent, and, as the essential catalytic agent, about 0.05–0.8%, based on the total weight of monomer present, of at least one compound having the formula:

$$R-\overset{\overset{\displaystyle O}{\|}}{C}-O-O-R'$$

wherein R is an alkyl radical having 1–8 carbon atoms and R′ is a tertiary alkyl group containing up to 8 carbon atoms.

4,064,117

RECOVERY OF FATTY ACIDS FROM TALL OIL HEADS

Dwight Earl Leavens, and Claude Frank Phillips, Jr., both of Panama City, Fla., assignors to Sylvachem Corporation, Jacksonville, Fla.

Filed Dec. 15, 1975, Ser. No. 640,400

Int. Cl.[2] C09F *1/00*

U.S. Cl. 260—97.6 **9 Claims**

1. In a process for treating tall oil heads with alkali at elevated temperature to yield a reaction mixture from which water vapor and unsaponifiable materials are removed as distillate and the resulting residue of alkali metal salts of heads fatty acids is hydrated for springing therefrom heads fatty acids, the improvement which comprises:

initiating formation of said reaction mixture with alkali metal agent of at most very low water content; and

conducting said alkali treating with said alkali metal agent essentially as an alkali fusion cook.

4,064,118

BLOOD SUBSTITUTE BASED ON HEMOGLOBIN

Jeffrey Tze-Fei Wong, Don Mills, Canada, assignor to Hematech Inc., Toronto, Canada

Filed Oct. 8, 1976, Ser. No. 730,943

Claims priority, application Canada, Oct. 22, 1975, 238305

Int. Cl.[2] A23J *1/06;* **A61K** *31/735*

U.S. Cl. 260—112.5 R **14 Claims**

1. A composition useful as a blood substitute or blood extender for administration to human or animal patients, said composition comprising the water soluble high molecular weight product of covalently coupling hemoglobin and a modified polysaccharide having a molecular weight of from about 5,000 to about 2,000,000, the modified polysaccharide being selected from the group consisting of dextran and hydroxyethyl starch modified to contain chemical groups capable of reaction with the chemical side groupings on the hemoglobin, said chemical side groupings being selected from the group consisting of amino, phenolic, sulfhydryl, thiomethyl, imidazo and carboxyl groupings.

4,064,119

SOLUBLE SOY PROTEIN

Jan Kruseman, Tatroz FR, Switzerland, assignor to Societe d'Assistance Technique pour Produits Nestle S.A., Lausanne, Switzerland

Filed Mar. 12, 1976, Ser. No. 666,226

Claims priority, application Switzerland, Mar. 27, 1976, 3937/76

Int. Cl.[2] A23J *1/14*

U.S. Cl. 260—123.5 **8 Claims**

1. A process for the preparation of a soluble fraction of soya proteins which comprises treating defatted soya flour in aqueous medium at a pH value below the isoelectric point of soya protein to obtain an acid extract of soya proteins containing at least about 50% by weight of the total proteins of the starting material, and neutralising the acid extract in a time of less than about 60 seconds by the addition of alkali in a concentration of higher than about 0.1 N.

4,064,120

3,3-DICHLORO-2-AZETIDINONE DERIVATIVES HAVING ANTIINFLAMMATORY ACTIVITY

John Krapcho, Somerset, and Chester F. Turk, Kendall Park, both of N.J., assignors to E. R. Squibb & Sons, Inc., Princeton, N.J.

Filed Nov. 1, 1976, Ser. No. 737,864

Int. Cl.[2] A61K *31/395;* **C07D** *205/04*

U.S. Cl. 260—239 A **10 Claims**

1. A compound having the formula

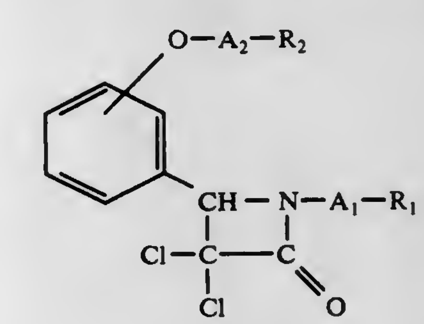

or a pharmaceutically acceptable salt thereof, wherein R_1 is alkyl, cycloalkyl or aryl; R_2 is dialkylamino; A_1 is a saturated bond or an alkylene group having 1 to 4 carbon atoms; and A_2 is an alkylene group having 2 to 5 carbon atoms; wherein aryl is phenyl or phenyl mono substituted with a halogen, alkyl, alkoxy, trifluoromethyl, or nitro group; alkyl and alkoxy are groups having 1 to 6 carbon atoms; and cycloalkyl is a group having 3 to 7 carbon atoms.

4,064,121

SUBSTITUTED NITROBENZOPHENONE DERIVATIVES AND A PROCESS FOR THE PREPARATION THEREOF

Edit Tóth; József Törley; Eva Palosi; Szaboles Szeberenyi; Laszlo Szporny; Sandor Görög, and Csilla Mészaros, all of Budapest, Hungary, assignors to Richter Gedeon Vegyeszeti Gyar Rt., Budapest, Hungary

Division of Ser. No. 485,701, July 3, 1974, Pat. No. 3,957,777. This application Aug. 12, 1975, Ser. No. 603,855

Claims priority, application Hungary, July 26, 1973, RI 517

Int. Cl.[2] C07D *225/02, 211/14, 707/08*

U.S. Cl. 260—239 B **4 Claims**

1. A compound of the formula:

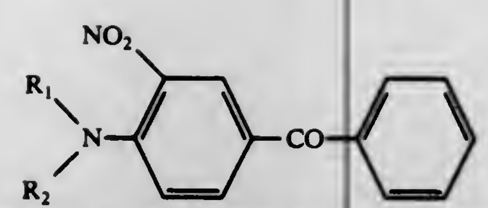

or a pharmaceutically acceptable acid addition or quaternary ammonium salt selected from the group consisting of saturated or unsaturated lower alkyl halides, lower alkyl sulfates and benzyl halides thereof, wherein R_1 and R_2 form together a heterocyclic group selected from the group which consists of piperidino, pyrrolidino and heptamethyleneimino.

4,064,122
HYDROXY-SUBSTITUTED CEPHALOSPORINS
Toshiyasu Ishimaru, D-14, 2-7, Momoyamadai, Suita, Japan
Filed Aug. 25, 1975, Ser. No. 607,361
Claims priority, application Japan, Aug. 26, 1974, 48-98045
Int. Cl.² C07D *501/36, 501/20;* **A61K** *31/545*
U.S. Cl. 544—26 **8 Claims**

1. A compound of the formula

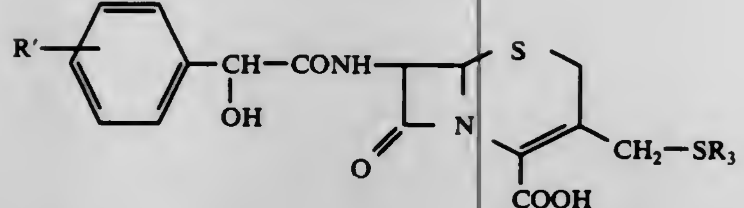

wherein R′ is carboxy, p-methoxy-benzyloxycarbonyl, ethoxycarbonyl, 2-methyl-propoxycarbonyl, p-nitrobenzyloxy-carbonyl 2,2,2-trichloroethoxycarbonyl, phenacyloxycarbonyl, diacetylmethoxycarbonyl, 1-methoxycarbonyl-2oxopropan-1-yl-oxycarbonyl, and 1-ethoxycarbonyl-2-oxopropan-1-yl-oxycarbonyl, and

R_3 is a heterocycle selected from the group consisting of the thiadiazolyl, tetrazolyl, triazolyl, oxadiazolyl, oxopyridinyl, imidazolyl and pyrimidinyl groups, and the corresponding methyl-substituted thiadiazolyl, tetrazolyl, triazolyl, oxadiazolyl, oxopyridinyl, imidazolyl and pyrimidinyl groups,

and pharmaceutically acceptable non-toxic salts thereof.

4,064,123
MORPHOLINO CONTAINING INDOLOTHIOPYRONES
Richard E. Brown, East Hanover, N.J., assignor to Warner-Lambert Company, Morris Plains, N.J.
Division of Ser. No. 468,349, May 9, 1974, Pat. No. 3,971,806. This application May 10, 1976, Ser. No. 685,040
Int. Cl.² C07D *495/04*
U.S. Cl. 544—142 **4 Claims**

1. A compound of the formula IX:

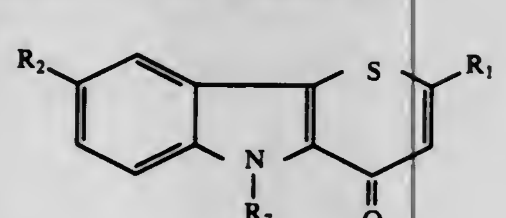

IX

wherein R_1 is hydrogen, 1 to 4 carbon lower alkyl or phenyl; R_2 is hydrogen or halogen; and R_7 is morpholino-lower alkyl.

4,064,124
MANUFACTURE OF PYRAZINES
Hans-Martin Weitz, Frankenthal, and Rolf Fischer, Heidelberg, both of Germany, assignors to BASF Aktiengesellschaft, Ludwigshafen, Germany
Filed Apr. 28, 1975, Ser. No. 572,136
Int. Cl.² C07D *241/04, 241/06*
U.S. Cl. 260—250 B **7 Claims**

1. A process for the manufacture of pyrazines of the formula

I

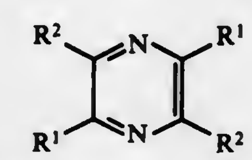

wherein the R¹'s and R²'s may be identical or different and each is hydrogen or an alkyl of 1 to 10 carbon atoms, cyclopentyl, cyclohexyl, aralkyl of 7 to 12 carbon atoms, phenyl, naphthyl and furthermore each R¹ and the adjacent R² together with the two carbon atoms joining the two radicals may be members of an alicyclic ring of from 5 to 12 members, wherein the above radicals and rings can in addition be substituted by alkyl or alkoxy of 1 to 4 carbon atoms or nitro in which nitrooxiranes of the formula

II

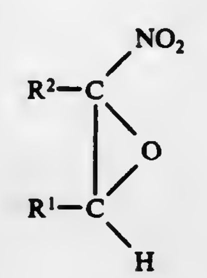

wherein R¹ and R² have the above meanings, are reacted with ammonia.

4,064,125
SUBSTITUTED AMIDES HAVING ANTIINFLAMMATORY ACTIVITY
John Krapcho, Somerset, N.J., assignor to E. R. Squibb and Sons, Inc., Princeton, N.J.
Filed Oct. 29, 1976, Ser. No. 736,990
Int. Cl.² A61K *31/165, 31/18;* **C07D** *239/64;* **C07C** *103/78*
U.S. Cl. 260—258 **13 Claims**

1. A compound having the formula

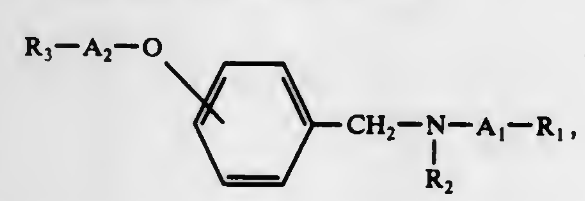

or a pharmaceutically acceptable salt thereof, wherein R_1 is alkyl, cycloalkyl or aryl; R_2 is

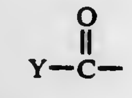

wherein Y is alkyl, cycloalkyl, aryl, arylalkyl, styryl or styryl substituted in the phenyl ring with a halogen, alkyl, alkoxy, trifluoromethyl, nitro or amino group; R_3 is alkylamino or dialkylamino; A_1 is a saturated bond or an alkylene group having 1 to 4 carbon atoms; and A_2 is an alkylene group having 2 to 5 carbon atoms; and wherein aryl is phenyl or phenyl substituted with a halogen, alkyl, alkoxy, trifluoromethyl, nitro, or amino group; alkyl and alkoxy are groups having 1 to 6 carbon atoms; and cycloalkyl is a group having 3 to 7 carbon atoms.

4,064,126
PROCESS FOR THE PRODUCTION OF OROTIC ACID
Barry Jackson, Visp, Switzerland, assignor to Lonza, Ltd., Gampel, Switzerland
Filed Aug. 11, 1976, Ser. No. 713,577
Claims priority, application Switzerland, Aug. 11, 1975, 010418/75
Int. Cl.² C07D *239/54*
U.S. Cl. 260—260 **16 Claims**

1. The process for the production of orotic acid, which comprises (a) converting trichloroacetyl chloride to γ,γ,γ-trichloroacetoacetyl chloride with ketone, (b) adding reaction mixture (a) to urea dissolved in a polar organic solvent, 6-trichloromethyluracil being produced, (c) separating the 6-trichloromethyluracil from reaction mixture (b), (d) hydrolyzing the 6-trichloromethyluracil to the salt of orotic acid at neutral or weakly basic conditions, and (e) treating the salt of orotic acid with a mineral acid, whereby free orotic acid is produced.

14. 6-trichloromethyluracil.

4,064,127
TRIFLUOROMETHYL DIBENZO[A,C]PHENAZINES AS IMMUNE REGULANTS
Jack B. Campbell, Indianapolis, Ind., assignor to Eli Lilly and Company, Indianapolis, Ind.
Division of Ser. No. 596,543, July 16, 1975, Pat. No. 4,024,142. This application Dec. 23, 1976, Ser. No. 754,065
Int. Cl.² C07D *241/46;* **A61K** *31/495*
U.S. Cl. 260—266 **3 Claims**

1. A compound of the formula

(I)

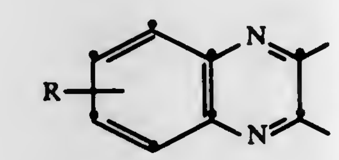

wherein R is trifluoromethyl; and Z is

(III)

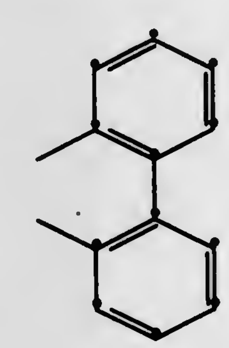

4,064,128
N_1[3-(4′-FLUOROBENZOYL)PROPYL]-N_2-(2′-CHLORO-5′-METHYLPHENOXY)ETHYL]PIPERAZINE
Wolfgang Milkowski, Burgdorf; Horst Zeugner, Hannover; Klaus-Wolf von Eickstedt, Berlin, and Werner Stühmer, Eldagsen, all of Germany, assignors to Kali-Chemie Aktiengesellschaft, Hannover, Germany
Continuation-in-part of Ser. No. 589,121, June 20, 1975, Pat. No. 3,969,356, which is a continuation-in-part of Ser. No. 288,320, Sept. 12, 1972, abandoned. This application May 5, 1976, Ser. No. 683,336
Claims priority, application Germany, Sept. 13, 1971, 2145682
The portion of the term of this patent subsequent to July 13, 1993, has been disclaimed.
Int. Cl.² C07D *295/10*
U.S. Cl. 260—268 R **2 Claims**

1. N_1-[3-(4′-fluorobenzoyl)-propyl]-N_2-(2′-chloro-5′-methylphenoxy)ethyl]-piperazine of the formula

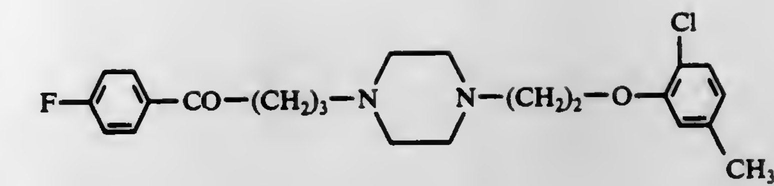

or a pharmaceutically acceptable salt thereof.

4,064,129
PROCESS FOR MAKING QUINACRIDONE AND ITS DERIVATIVES
Herman Gerson, New York, N.Y.; John Francis Santimauro, Wyckoff, and Lawrence Robert Lerner, Livingston, both of N.J., assignors to Harmon Colors Corporation, Haledon, N.J.
Filed Sept. 17, 1976, Ser. No. 724,150
Int. Cl.² C09B *48/00*
U.S. Cl. 260—279 QA **22 Claims**

1. A process for making quinacridone and its derivatives which comprises heating a 2,5-diarylaminoterephthalic acid and an acid catalyst in a two phase liquid system, comprising ethylene glycol and an organic liquid which is immiscible with water and ethylene glycol, wherein the acid catalyst is selected from the group consisting of the mono-or di-sulfonic acids of benzene, toluene, xylene, paradichlorobenzene, naphthalene, nitrobenzene and chloroparaxylene, perchloric acid and methanesulfonic acid; ethylene glycol is present in an amount of about 0.25 to 4 parts by weight per part of 2,5-diarylaminoterephthalic acid and the organic liquid present in an amount of at least about 2 parts by weight per part of ethylene glycol, at a temperature sufficient to remove by-product water from the liquid system by vaporization.

14. A process for making substantially solid solutions of quinacridone mixtures being characterized in that the X-ray diffraction pattern thereof is different from the sum of the X-ray diffraction patterns of the component quinacridones, which comprises heating a mixture of 2,5-diarylaminoterephthalic acids and an acid catalyst in a two phase liquid system, comprising ethylene glycol and an organic liquid which is immiscible with water and ethylene glycol, wherein the acid catalyst is selected from the group consisting of the mono- or di-sulfonic acids of benzene, toluene, xylene, paradichlorobenzene, naphthalene, nitrobenzene and chloroparaxylene, perchloric acid and methanesulfonic acid; the ethylene glycol is present in an amount of about 0.25 to 4 parts by weight per part of the 2,5-diarylaminoterephthalic acid mixture and the organic liquid is present in an amount of at least about 2 parts by weight per part of ethylene glycol, at a temperature sufficient to remove by-product water from the liquid system by vaporization.

4,064,130
Nβ-SUBSTITUTED 8-β-AMINOETHYLERGOLIN-I DERIVATIVES AND THEIR MANUFACTURE
Miroslav Semonsky; Antonin Cerny; Marie Krajcrova; Karel Rezabeck; Marie Auskova; Miroslav Seda, all of Prague; Bohumil Sevcik, and Josef Kral, both of Pohori-Chotoun, all of Czechoslovakia, assignors to SPOFA, Pharmaceutical Works, Prague, Czechoslovakia
Filed July 18, 1975, Ser. No. 597,389
Claims priority, application Czechoslovakia, July 19, 1974, 5178/74
Int. Cl.² C07D *457/02*
U.S. Cl. 260—285.5 **1 Claim**

1. D-6-methyl-8-β-isopropylaminoethylergolin-I.

4,064,131
PROCESS FOR THE PRODUCTION OF 1,2-DIHYDRO-2-OXO-4-METHYL-7-ACETOACETIC ACID AMIDO-QUINOLINE
Erik Herkenrath, Glis, Switzerland, assignor to Lonza, Ltd., Gampel, Switzerland
Division of Ser. No. 507,071, Sept. 18, 1974, abandoned. This application Mar. 14, 1975, Ser. No. 558,355
Claims priority, application Switzerland, Sept. 20, 1973, 13492/73; Sept. 20, 1973, 13493/73
Int. Cl.^{2} C07D *215/38*
U.S. Cl. 260—287 K **8 Claims**

1. The process for producing 1,2-dihydro-2-oxo-4-methyl-7-acetoacetic acid amido-quinoline which comprises the step of reacting diketene with m-phenylene diamine, whereby said 1,2-dihydro-2-oxo-4-methyl-7-acetoacetic acid amido-quinoline results, the molar ratio of diketene to m-phenylene diamine being between 1.77 to 1 and 2.33 to 1 the reaction being conducted (i) in water in the presence of a catalytic amount of acetic acid or (ii) in an inert organic solvent in the presence of a catalytic amount of acetic acid, the reactants being soluble in the organic solvent, or (iii) in glacial acetic acid, the reaction being conducted at a temperature between room temperature and reflux temperature, and the reaction being conducted at atmospheric pressure.

4,064,132
AROYL-SUBSTITUTED PHENYLACETAMIDE DERIVATIVES
Paul Adriaan Jan Janssen, Vosselaar (Turnhout); Georges Henri Paul Van Daele, Turnhout, and Jozef Martin Boey, Wilrijk (Antwerp), all of Belgium, assignors to Janssen Pharmaceutica N.V., Beerse, Belgium
Division of Ser. No. 620,906, Oct. 8, 1975, Pat. No. 4,035,376, which is a continuation-in-part of Ser. No. 395,877, Sept. 10, 1973, abandoned, which is a continuation-in-part of Ser. No. 300,079, Oct. 24, 1972, abandoned. This application Dec. 10, 1976, Ser. No. 749,575
Int. Cl.^{2} C07D *213/56, 211/06*
U.S. Cl. 260—293.62 **2 Claims**

1. An aroyl substituted α-R_2-α-R_3-phenylacetic acid derivative having the formula:

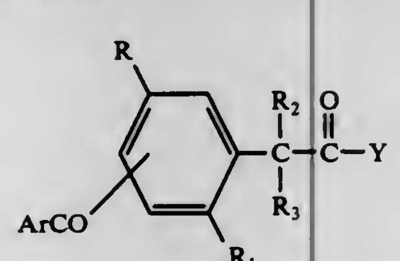

wherein:
- ArCO is an aroyl substituent the Ar function of which is a member selected from the group consisting of 2-thienyl, 5-loweralkyl-2-thienyl, 5-halo-2-thienyl, 2-naphthyl and 3-pyridyl, said ArCO being in the meta- or para-position relative to the acetic acid function;
- either of R and R_1 is hydrogen, the other being a member selected from the group consisting of hydrogen, halo and loweralkyl, provided that, when said R is halo or loweralkyl, then said ArCO is in the aforementioned paraposition, and when said R_1 is halo or loweralkyl, then said ArCO is in the aforementioned meta-position, and further provided that when said R or R_1 is halo, then said Ar is a member selected from the group consisting of 2-thienyl, 5-loweralkyl-2-thienyl and 5-halo-2-thienyl;
- either of R_2 and R_3 is a member selected from the group consisting of hydrogen, allyl and loweralkyl, the other being a member selected from the group consisting of hydrogen and loweralkyl, provided that, when either of said R_2 and R_3 is allyl, the other is hydrogen, and when either of said R_2 and R_3 is loweralkyl, the other is a member selected from the group consisting of hydrogen and loweralkyl;
- R_2 and R_3 taken together, is an alkylene bridge attached to the α-carbon of the acetic acid function:

$$\begin{array}{c}(CH_2)_n\\ -C-\end{array}$$

wherein n is an integer from 2 to 5; and
- Y is a member selected from the group consisting of amino, anilino, halo-substituted anilino, loweralkylanilino, loweralkyloxyanilino, piperidino, hydroxyethylamino, and hydroxyamino.

4,064,133
CYCLOHEXENONE DERIVATIVES
Seiji Miyano, and Nobuhiro Abe, both of Fukuoka, Japan, assignors to Takeda Chemical Industries, Ltd., Osaka, Japan
Division of Ser. No. 354,139, April 24, 1973, Pat. No. 3,969,409. This application Dec. 9, 1974, Ser. No. 530,843
Claims priority, application Japan, May 11, 1972, 47-47047; Dec. 22, 1972, 48-2613
Int. Cl.^{2} C07D *211/32*
U.S. Cl. 260—293.79 **12 Claims**

1. A member selected from the group consisting of a compound of formula

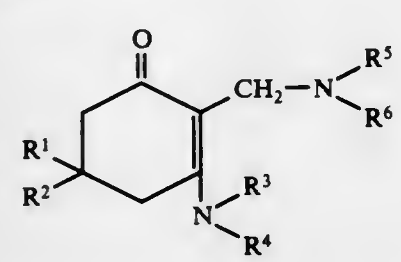

wherein each of
- R^1 and R^2 represents hydrogen, or methyl or when one of R^1 or R^2 is hydrogen the other may represent phenyl, one of R^3 and R^4 represents hydrogen, alkyl of 1 to 6 carbon atoms, and the other represents alkyl of 1 to 6 carbon atoms, benzyl, phenethyl, phenyl or phenyl mono-substituted by a member of the group consisting of alkyl of 1 to 3 carbon atoms, alkoxy of 1 to 3 carbon atoms, halogen, nitro and hydroxy,
- R^5 and R^6 represent piperidino, or piperidino monosubstituted by a member of the group consisting of alkyl of 1 to 3 carbon atoms, alkoxy of 1 to 3 carbon atoms, halogen, and hydroxy, with the proviso that the alkoxy, halogen and hydroxy substituent is in the 4-position of the piperidino nucleus and a pharmaceutically acceptable salt thereof.

4,064,134
ETHYL-3-(3-AMINO-2-PYRIDYL)CARBAZATE HYDROCHLORIDE
George C. Wright, Norwich, and James L. Butterfield, New Berlin, both of N.Y., assignors to Morton-Norwich Products, Inc., Norwich, N.Y.
Filed Aug. 20, 1976, Ser. No. 716,215
Int. Cl.^{2} C07D *213/77;* **C07C** *85/11;* **A61K** *31/44*
U.S. Cl. 260—295 CA **1 Claim**

1. Ethyl 3-(3-amino-2-pyridyl)carbazate hydrochloride.

4,064,135
CERTAIN THIAZOLE-5-CARBOXAMIDE COMPOUNDS
Belig M. Berkoz, Los Altos; Brian Lewis, Mountain View, both of Calif., and Joseph M. Muchowski, Mexico D.F., Mexico, assignors to Syntex (U.S.A.) Inc., Palo Alto, Calif.
Filed July 19, 1976, Ser. No. 706,412
Int. Cl.^{2} C07D *227/56*
U.S. Cl. 260—302 S **19 Claims**

1. A compound having the formula

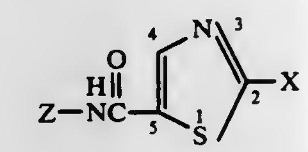

(I)

wherein X is the group $—SOR^1$ or $—SO_2R^1$ wherein R^1 is lower alkyl, phenyl, or benzyl and Z is selected from the group of alkyl having from one through 12 carbon atoms, and groups having the formulas:

$R^2—(CH_2)_m—$;

$R^3(CH_2)_n—$;

$R^4—CH{=}CH—(CH_2)_n—$;

$R^5—C{\equiv}C—(CH_2)_n—$

wherein m is 1, 2, 3, or 4; n is 2, 3, or 4; R^2 is cycloalkyl having from three through eight carbon atoms; R^3 is selected from the group of bicyclo[3.1.0]hexyl; bicyclo[2.2.1]heptyl; adamantyl; and 4-methylbicyclo[2.2.2]oct-1-yl and wherein attachment to the $(CH_2)_n$ linking group can be at any ring atom of bicyclo[3.1.0]hexyl; bicyclo[2.2.1]heptyl and adamantyl group and is at the 1-position of the 4-methylbicyclo[2.2.2]octyl group; and R^4 and R^5 are hydrogen or alkyl having from one through four carbon atoms and wherein the groups $R^4—CH{=}CH—(CH_2)_n—$ and $R^5—C{\equiv}C—(CH_2)_n—$ each have from four through eight carbon atoms.

4,064,136
PROCESS FOR THE MANUFACTURE OF BENZOXAZOLE, BENZTHIAZOLE AND BENZIMIDAZOLE DERIVATIVES
Peter Loew, Munchenstein; Hansrudolf Schwander, Riehen, and Haukur Kristinsson, Bottmingen, all of Switzerland, assignors to Ciba-Geigy AG, Basel, Switzerland
Filed July 13, 1976, Ser. No. 704,896
Claims priority, application Switzerland, July 21, 1975, 9503/75
Int. Cl.^{2} C07D *277/64, 203/56, 235/12, 235/14*
U.S. Cl. 260—304 C **8 Claims**

1. A process for the manufacture of a heterocyclic compound of the formula

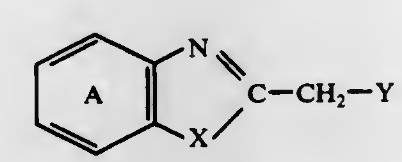

wherein Y is —CN, —COOR' or

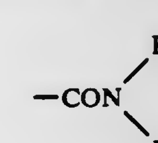

where
- R' is alkyl of up to 18 carbon atoms; or is phenyl which is unsubstituted or substituted by lower alkyl, lower alkoxy, chloro, bromo, nitro or cyano;
- R'' and R''' are independently R', hydrogen, or together with the nitrogen to which they are attached, represent piperidino;
- X is —S—, —O—, or —NR''—;

and the benzene ring A is unsubstituted or substituted by lower alkyl, lower alkoxy, chloro, bromo, nitro, cyano, phenyl, 2-cyanoethyl, 2-ethoxycarbonylethyl, 2-(2'-methoxyethoxy)-ethoxycarbonylethyl, ethoxycarbonyl, 2-methoxyethoxycarbonyl or fused phenyl;

wherein a nitrile of the formula

$NC—CH_2—Y$

is reacted in an aprotic organic solvent, with an alcohol of the formula

R—OH

where R is a lower alkyl,

in a molar ratio of said nitrile to said alcohol of 1:0.9 to 1:1.2, in the presence of an anhydrous strong acid at temperatures of −10° to +40° C to give an imino-ether salt of the formula

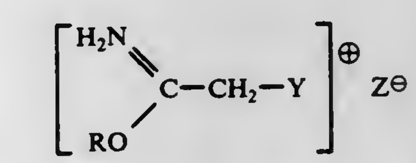

where Z − is the anion of said strong acid, and said imino-ether salt is subjected, without intermediate isolation thereof, to a condensation reaction with an aromatic amine of the formula

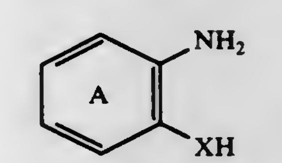

in a molar ratio of said nitrile to said aromatic amine of 1:0.8 to 1:1.2, at temperatures of 0° to 120° C to produce said heterocyclic compound.

4,064,137
PENICILLIN AND CEPHALOSPORIN DERIVATIVES AND PROCESS FOR PREPARING THE SAME
Koichi Hirai; Yuji Iwano; Tokio Saito; Tetsuo Hiraoka; Yukichi Kishida, and Takuzo Nishimura, all of Tokyo, Japan, assignors to Sankyo Company Limited, Tokyo, Japan
Filed Jan. 17, 1977, Ser. No. 759,640
Claims priority, application Japan, Jan. 21, 1976, 51-5542
Int. Cl.^{2} C07D *499/02, 499/80*
U.S. Cl. 260—306.7 C **6 Claims**

1. A compound represented by the formula

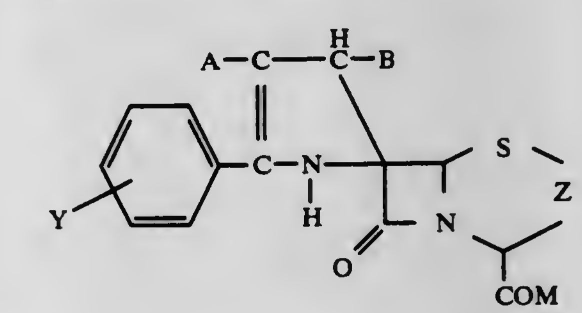

wherein Y represents a hydrogen atom, a halogen atom, a nitro group, an alkoxy group or an alkyl group; M represents a conventional protective group for a hydroxyl or carboxyl group; Z represents a group

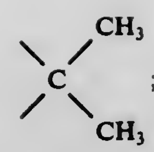

A represents a cyano group, a carboalkoxy group or a nitro group; and B represents a hydrogen atom, a cyano group, a carboalkoxy group or a nitro group.

4,064,138
AMINO ACID DERIVATIVES
Albert L. Saari, Minneapolis, and Ray H. Anderson, Champlin, both of Minn., assignors to General Mills, Inc., Minneapolis, Minn.
Filed Nov. 12, 1975, Ser. No. 631,285
Int. Cl.² C07D *233/64;* **C07C** *101/24;* **A61K** *7/18*
U.S. Cl. 548—344 **12 Claims**

1. An amino acid derivative selected from the group consisting of amino acid monofluorophosphate, amino acid hydrofluoride phosphate, amino acid hydrofluoride monofluorophosphate, amino acid di-monofluorophosphate, amino acid phosphate monofluorophosphate and their alkali metal salts, said amino acids being selected from the group consisting of lysine, hydroxylysine, arginine, histidine and ornithine.

4,064,139
SUBSTITUTED 9,10-DIHYDROANTHRACEN-9,10-IMINES
Paul S. Anderson, Lansdale; Marcia E. Christy, Perkasie, and Gerald S. Ponticello, Lansdale, all of Pa., assignors to Merck & Co., Inc., Rahway, N.J.
Continuation-in-part of Ser. No. 564,011, April 7, 1975, abandoned, which is a continuation-in-part of Ser. No. 470,093, May 15, 1974, abandoned. This application Oct. 28, 1976, Ser. No. 736,672
Int. Cl.² C07D *487/04*
U.S. Cl. 260—313.1 **55 Claims**

1. A compound selected from the group consisting of:
2-bromo-11-methyl-9,10-dihydroanthracen-9,10-imine;
2-methoxy-11-methyl-9,10-dihydroanthracen-9,10-imine;
9,10-diethyl-11-methyl-9,10-dihydroanthracen-9,10-imine;
2-chloro-11-propyl-9,10-diethyl-9,10-dihydroanthracen-9,10-imine;
2-iodo-11-propyl-9,10-diethyl-9,10-dihydroanthracen-9,10-imine;
2-bromo-11-propyl-9,10-diethyl-9,10-dihydroanthracen-9,10-imine;
2-chloro-11-cyclopropyl-9,10-diethyl-9,10-dihydroanthracen-9,10-imine;
2-iodo-11-cyclopropyl-9,10-diethyl-9,10-dihydroanthracen-9,10-imine;
2-bromo-11-cyclopropyl-9,10-diethyl-9,10-dihydroanthracen-9,10-imine;
2-chloro-11-(3-hydroxypropyl)-9,10-diethyl-9,10-dihydroanthracen-9,10-imine;
2-iodo-11-(3-hydroxypropyl)-9,10-diethyl-9,10-dihydroanthracen-9,10-imine;
2-bromo-11-(3-hydroxypropyl)-9,10-diethyl-9,10-dihydroanthracen-9,10-imine;
9,10-dihydro-2,11-dimethyl-9,10-diethylanthracen-9,10-imine;
2-chloro-9,10-dihydro-9,10-diethyl-11-methylanthracen-9,10-imine;
9,10-dihydro-1-fluoro-9,10-diethyl-11-methylanthracen-9,10-imine;
9,10-dihydro-2-methoxy-9,10-diethyl-11-methylanthracen-9,10-imine;
9,10-dihydro-9,10-diethyl-1,11-dimethylanthracen-9,10-imine;
9,10-dihydro-2-trifluoromethyl-9,10-diethyl-11-methylanthracen-9,10-imine;
9,10-dihydro-2-fluoro-9,10-diethyl-11-methylanthracen-9,10-imine;
2-bromo-9,10-dihydro-9,10-diethyl-11-methylanthracen-9,10-imine;
2-cyano-9,10-dihydro-9,10-diethyl-11-methylanthracen-9,10-imine;
2-methylthio-9,10-diethyl-11-methyl-9,10-dihydroanthracen-9,10-imine;
1-isopropyl-9,10-diethyl-11-methyl-9,10-dihydroanthracen-9,10-imine;
2-isopropyl-9,10-diethyl-11-methyl-9,10-dihydroanthracen-9,10-imine;
2-(N,N-dimethylsulfamoyl)-9,10-diethyl-11-methyl-9,10-dihydroanthracen-9,10-imine;
2-diethoxymethyl-9,10-diethyl-11-methyl-9,10-dihydroanthracen-9,10-imine;
11-benzyl-9-methyl-10-ethyl-9,10-dihydroanthracen-9,10-imine;
10-ethyl-9,11-dimethyl-9,10-dihydroanthracen-9,10-imine;
11-benzyl-2,9-dimethyl-10-ethyl-9,10-dihydroanthracen-9,10-imine;
11-(3-hydroxypropyl)-9-methyl-10-ethyl-9,10-dihydroanthracen-9,10-imine;
11-propyl-9-methyl-10-ethyl-9,10-dihydroanthracen-9,10-imine;
11-butyl-9-methyl-10-ethyl-9,10-dihydroanthracen-9,10-imine;
1-chloro-9,11-dimethyl-10-ethyl-9,10-dihydroanthracen-9,10-imine;
11-allyl-9-methyl-10-ethyl-9,10-dihydroanthracen-9,10-imine;
11-cyclopropylmethyl-9-methyl-10-ethyl-9,10-dihydroanthracen-9,10-imine;
11-(3-dimethylaminopropyl)-9-methyl-10-ethyl-9,10-dihydroanthracen-9,10-imine;
2-iodo-11-(3-dimethylaminopropyl)-9-methyl-10-ethyl-9,10-dihydroanthracen-9,10-imine;
2-bromo-11-(3-dimethylaminopropyl)-9-methyl-10-ethyl-9,10-dihydroanthracen-9,10-imine;
9-methyl-10-ethyl-9,10-dihydroanthracen-9,10-imine;
10-vinyl-9,11-dimethyl-9,10-dihydroanthracen-9,10-imine;
2-methoxy-9,11-dimethyl-10-ethyl-9,10-dihydroanthracen-9,10-imine;
2-bromo-9,10-diethyl-11-methyl-9,10-dihydroanthracen-9,10-imine;
2-nitro-9,10-diethyl-11-methyl-9,10-dihydroanthracen-9,10-imine;
2-amino-9,10-diethyl-11-methyl-9,10-dihydroanthracen-9,10-imine;
3,9,11-trimethyl-9,10-dihydroanthracen-9,10-imine;
2,9,11-trimethyl-9,10-dihydroanthracen-9,10-imine;
2-chloro-9,11-dimethyl-9,10-dihydroanthracen-9,10-imine;
9,11-dimethyl-9,10-dihydroanthracen-9,10-imine;
9,11-dimethyl-10-ethyl-9,10-dihydroanthracen-9,10-imine;
9,10-bis(trifluoromethyl)-11-methyl-9,10-dihydroanthracen-9,10-imine;
11-methyl-9,10-dipropyl-9,10-dihydroanthracen-9,10-imine;
11-methyl-9-ethyl-10-propyl-9,10-dihydroanthracen-9,10-imine;
2-carboxaldehyde-9,10-diethyl-11-methyl-9,10-dihydroanthracen-9,10-imine; and
9,10,11-triethyl-9,10-dihydroanthracen-9,10-imine.

4,064,140
PROCESS FOR THE PRODUCTION OF IMINOPYRROLINONES
Jean-Marie Adam, Saint-Louis, France, assignor to Ciba-Geigy Corporation, Ardsley, N.Y.
Filed Apr. 19, 1976, Ser. No. 677,994
Claims priority, application Switzerland, Apr. 22, 1975, 5143/75
Int. Cl.² A01N *21/00;* **A61K** *31/40;* **C07D** *207/44*
U.S. Cl. 260—326.5 FL **15 Claims**

1. Process for the production of iminopyrrolinones of the formula I

(I)

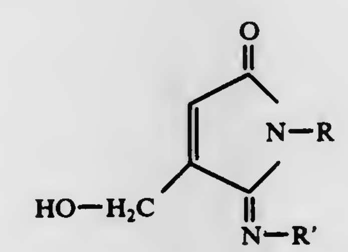

wherein one of the two substituents R and R′ represents a phenyl ring unsubstituted, or substituted by C_1-C_4-alkyl, C_1-C_4-alkoxy, C_1-C_4-hydroxyalkyl, C_1-C_4-alkylamino, (C_1-C_4-alkyl)-$_2$amino, halogen, nitro or cyano, whilst the other of the two substituents R and R′ represents hydrogen, which process comprises reacting a chloroacetoacetanilide of the formula II

$$Cl—CH_2—CO—CH_2—CO—NH—R \qquad (II)$$

in the presence of cyanide ions, in an inert solvent in the temperature range of 0° to 80° C.

4,064,141
NOVEL ESTERS OF 6,11-DIHYDRODIBENZO-[B.E.]-THIEPIN-11-ONE-3-ALKANOIC ACIDS
Jack Ackrell, Palo Alto, Calif., assignor to Syntex (U.S.A.) Inc., Palo Alto, Calif.
Filed July 19, 1976, Ser. No. 706,866
Int. Cl.² C07D *337/12, 411/12*
U.S. Cl. 260—327 B **16 Claims**

1. A compound selected from the group of those represented by the formula:

(A)

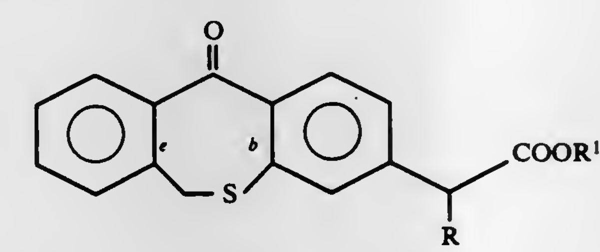

wherein R is hydrogen or methyl and R¹ is $—CH_2—CH(OH)—CH_2OH$,

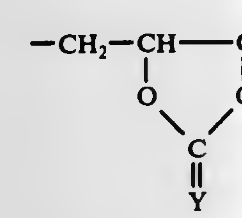

where Y is either O or S, or

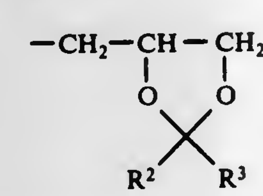

where R² and R³ are independently hydrogen, alkyl having 1 to 6 carbon atoms, phenyl or benzyl, or together R² and R³ form an alkylene bridge having 4, 5 or 6 carbon atoms.

4,064,142
α-TRICHLOROMETHYL THENYL PHENYLETHERS AND SULFIDES
Robert George Stein, Kenosha, Wis.; Terry Lee Couch, Waukegan, and Aldo Joseph Crovetti, Lake Forest, both of Ill., assignors to Abbott Laboratories, North Chicago, Ill.
Division of Ser. No. 565,996, April 7, 1975. This application Sept. 3, 1976, Ser. No. 720,187
Int. Cl.² C07D *333/16, 333/12;* **A01N** *9/00*
U.S. Cl. 260—332.3 R **3 Claims**

1. A chemical compound of the formula

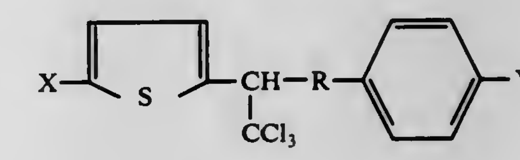

wherein X and Y are selected from the group consisting of hydrogen, halo, lower alkyl and lower alkoxy; and R is oxygen or sulfur.

4,064,143
OLEANDOMYCIN DERIVATIVES
Arthur A. Nagel, Gales Ferry, Conn., assignor to Pfizer Inc., New York, N.Y.
Filed Dec. 10, 1976, Ser. No. 749,481
Int. Cl.² C07D *315/00*
U.S. Cl. 260—343 **16 Claims**

1. A compound of the formula:

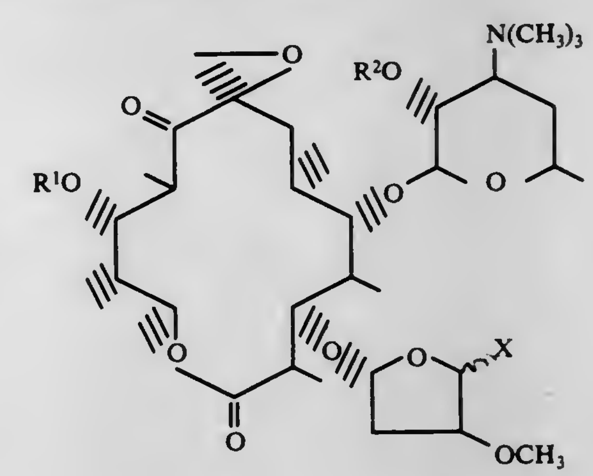

and the pharmaceutically-acceptable acid-addition salts thereof;

wherein R¹ and R² are each selected from the group consisting of hydrogen, acetyl and propionyl;

and X is selected from the group consisting of vinyl, ethyl and formyl.

4,064,144
PROCESS FOR THE PREPARATION OF TRANS-Δ⁹-ISOAMBRETTOLIDE
Ching Y. Tseng, Middletown, N.J., assignor to International Flavors & Fragrances Inc., New York, N.Y.
Division of Ser. No. 694,452, June 9, 1976, Pat. No. 4,014,902. This application Dec. 22, 1976, Ser. No. 753,461
Int. Cl.² C07D *313/00*
U.S. Cl. 260—343 **5 Claims**

1. A process for producing trans-Δ^9-isoambrettolide comprising the steps of:

i. intimately admixing aleuritic acid with a large excess of a compound selected from the group consisting of a trialkyl orthoformate and a dialkyl acetal of a dialkyl formamide thereby forming a dioxolane derivative mixture;

ii. intimately admixing said dioxolane derivative with a lower alkanoic acid anhydride thereby producing a mixture of trans isomer of bengalene acid derivatives; and

iii. intimately admixing said bengalene acid derivatives with a distillation aid, a transesterifying agent and heat transfer agent and distilling the resulting mixture thereby forming trans-Δ^9-isoambrettolide.

4,064,145
PRODUCTION OF TETRAHYDROFURAN
Paul D. Taylor, Corpus, Christi, Tex., assignor to Celanese Corporation, New York, N.Y.
Division of Ser. No. 623,882, Oct. 20, 1975. This application Oct. 27, 1976, Ser. No. 735,982
Int. Cl.[2] C07D *307/08*
U.S. Cl. 260—346.11 **1 Claim**

1. A process for producing tetrahydrofuran which comprises contacting hydrogen and carbon monoxide under hydroformylation conditions with allyl alcohol in a solvent at a temperature between about 20° C and 120° C and a pressure between about 15 and 150 psi in the presence of a hydroformylation catalyst comprising a complex of rhodium metal, carbon monoxide and triaryl phosphine ligand; recovering the 4-hydroxybutanal from the reaction mixture by aqueous extraction; and subjecting the resultant aqueous extract phase to hydrogenation under acidic conditions to convert 4-hydroxybutanal to tetrahydrofuran.

4,064,146
PROCESS FOR THE PREPARATION OF ALPHA-SUBSTITUTED EPOXIDE COMPOUNDS
Carlo Neri, and Emilio Perrotti, both of San Donato Milanese, Italy, assignors to Snam Progetti S.p.A., Milan, Italy
Continuation of Ser. No. 407,721, Oct. 18, 1973, abandoned, which is a continuation of Ser. No. 252,761, May 12, 1972, abandoned. This application Sept. 25, 1975, Ser. No. 616,630
Claims priority, application Italy, May 13, 1971, 24499/71
Int. Cl.[2] C07D *301/22*
U.S. Cl. 260—348.16 **6 Claims**

1. A process for the preparation of an alpha-substituted epoxide represented by the formula:

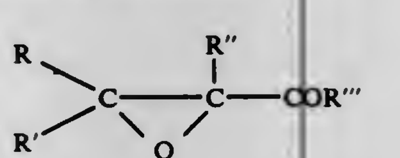

in which R, R' and R''' are alkyl having up to 12 C atoms and R'' is hydrogen, wherein the corresponding alcohol represented by the formula

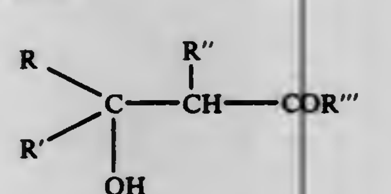

in which R, R', R'' and R''' have the meanings given above, is oxidized with molecular oxygen in the presence of a catalyst represented by the formula: $CuXL_n$, in which X is a member of the group consisting of Cl^-, Br^-, I^-, F^-, CN^-, CH_3OCO^-, enolate, nitrate and perchlorate, L_n is a coordinating base selected from the group consisting of: phenanthrolines, dipyridyls, pyridines, dimethylsulphoxide, dimethylformamide, phosphines, arsines, stibines, imidazole and piperidine, and n is an integer in the range of from 1 to 6.

4,064,147
PROCESS FOR THE PRODUCTION OF AROMATIC MONONITRO COMPOUNDS
Bernd Thelen, Leverkusen; Wolfgang Auge, and Karl-Werner Thiem, both of Cologne, all of Germany, assignors to Bayer Aktiengesellschaft, Leverkusen, Germany
Filed May 12, 1976, Ser. No. 685,467
Claims priority, application Germany, May 16, 1975, 2521891
Int. Cl.[2] C07C *49/68, 79/10, 79/12*
U.S. Cl. 260—369 **11 Claims**

1. In a process for the production of aromatic compounds by nitrating aromatic compounds with nitric acid having a concentration between 70 and 100% by weight, working up of the nitration mixture by distillation and separation of the aromatic nitro compounds, the improvement which comprises, that in the nitration mixture, depending from the concentration of the nitric acid being present, the ratio by weight of nitric acid plus water to organic components is not lower than 3 (when nitric acid having a concentration of 70% by weight is present) and 8 (when nitric acid having a concentration of 100% by weight is present), that the nitration mixture is worked up in a rectification column, whereby in said rectification column the minimum value of the ratio by weight of nitric acid plus water to organic components are not lower than 3 (when nitric acid having a concentration of 70% by weight and aromatic compounds having 1 aromatic nucleus or when nitric acid having a concentration of 78% by weight and aromatic compounds having more than one aromatic nucleus are present) and 8 (when nitric acid having a concentration of 100% by weight and aromatic compounds having one or more aromatic nucleus are present), that the nitration mixture is fed into the rectification part of said rectification column, that at the top of said rectification column a more concentrated nitric acid than in the nitration mixture is withdrawn and that in the sump of said rectification column a concentration of nitric acid between 66 and 70% by weight is maintained when nitration mixtures from the nitration of relatively reactive aromatic compounds are worked up and a concentration of nitric acid between 66 and 85% by weight is maintained when nitration mixtures from the nitration of relatively low reactive aromatic compounds are worked up, but a concentration of nitric acid lower than in the nitration mixture is always maintained, and that the aromatic mononitro compounds are separated out of the product discharged at the sump of the rectification column.

4,064,148
CHEMICAL PROCESS FOR PREPARING Δ9(11) DEHYDROSTEROIDS
Derek H. R. Barton, London, England, and Robert H. Hesse, Cambridge, Mass., assignors to Research Institute for Medicine and Chemistry Inc., Cambridge, Mass.
Filed May 21, 1976, Ser. No. 688,714
Claims priority, application United Kingdom, May 22, 1975, 22324/75
Int. Cl.[2] C07J *5/00, 3/00*
U.S. Cl. 260—397.45 **15 Claims**

1. A process for electrophilically fluorinating a saturated 9,11-unsubstituted-3-oxygenated-17α-(esterified hydroxy)-20-ketopregnane steroid wherein the esterified hydroxy group at the 17α-position is a nitrooxy, trifluoroacetoxy or trichloroacetoxy group, which comprises reacting said steriod and a fluorinating agent, wherein the fluorinating agent is molecular fluorine, a fluorosulphur hypofluorite or a C_{1-6} fluoroalkyl hypofluorite; substantially homogeneously dispersed in a liquid medium in the presence of a free radical inhibitor whereby formation of free fluorine radicals is suppressed and the 9α-hydrogen atom of said steriod is replaced by a fluorine atom.

4,064,149
PROCESS FOR THE MANUFACTURE OF WAXES FOR CARBON PAPER
Klaus Rieger; Karl-Heinz Stetter, and Josef Wildgruber, all of Gerstohofen, Germany, assignors to Hoechst Aktiengesellschaft, Frankfurt am Main, Germany
Filed Apr. 7, 1976, Ser. No. 674,574
Claims priority, application Germany, Oct. 18, 1975, 2546791
Int. Cl.[2] C09F *7/02;* **C11C** *3/00*
U.S. Cl. 260—406 **12 Claims**

1. A process for the manufacture of a carbon paper wax having a carbon black absorption in the range of from 80 to 140% by weight and an oil binding temperature of at least 30° C. by treating a molten natural wax having ester wax character with an oxygen-containing gas, which comprises treating the molten wax at a temperature in the range of from its melting point to 250° C with oxygen, air, or another oxygen-containing gas in an amount of from 0.01 to 10 m^3 per hour and per kilogram of wax, throughout the treatment maintaining the oxygen in excess and intensely mixing same with the wax, continuing the treatment until a carbon paper wax is obtained having a carbon black absorption within said range, thereby producing a wax having an acid number which does not exceed the acid number of the starting wax.

9. The process of claim 1, wherein crude montan wax, peat wax, bark wax, candelilla wax, carnauba wax, ouricury wax, esparto wax, rice wax, sugar cane wax, maize wax, or beeswax in deresinified or non deresinified form is used as natural wax having ester wax character.

4,064,150
SYNTHESIS OF ISOPRENOID 1,5-DIENES
John A. Katzenellenbogen, Urbana, Ill., assignor to University of Illinois Foundation, Urbana, Ill.
Filed May 26, 1976, Ser. No. 690,090
Int. Cl.[2] C11C *1/00;* **C07C** *53/00*
U.S. Cl. 260—413 **18 Claims**

1. A method of synthesizing aliphatic acids containing 1,5-isoprenoid diene moieties comprising the steps of:

a. forming a dicopper(I) dienolate of an aliphatic α,β-unsaturated acid by reaction of the α,β-unsaturated acid or sodium salt thereof first with lithium dialkyl amide and then with cuprous iodide;

b. selectively alkylating the dicopper(I) dienolate at the gamma position with an allylic electrophile having the general formula

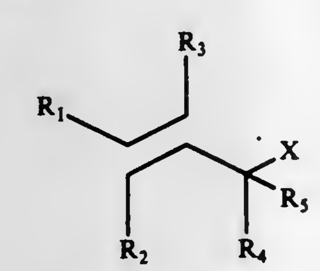

where X = halide or sulfonate and R_1–R_5 are hydrogen or C_1–C_{10} aliphatic or cycloaliphatic groups; and

c. isolalating the alkylation production from the reaction mixture of step (b).

15. The compound (E,E)-2,6-dimethyl-2,6-octadienoic acid having the formula

4,064,151
HALOSILYL CARBAMATES
Eddie Hedaya, White Plains, and Theodoropulos Spyros, Yorktown Heights, both of N.Y., assignors to United Carbide Corporation, New York, N.Y.
Filed May 17, 1976, Ser. No. 687,160
Int. Cl.[2] C07C *118/00;* **C07F** *7/10*
U.S. Cl. 260—448.2 N **4 Claims**

1. Halosilyl carbamates having the formula:

$RNHCOOSiXY_2$

wherein R forms as either an amine or an amine salt a base of sufficient strength to form a carbamate salt with carbon dioxide, X is halogen and Y is a member selected from the group consisting of halogen, hydrogen, lower alkyl, alicyclics, aryl, alkaryl and aralkyl, each having no more than about 10 carbon atoms.

4,064,152
THERMALLY STABLE NICKEL-ALUMINA CATALYSTS USEFUL FOR METHANATION
Dennis P. McArthur, Yorba Linda, Calif., assignor to Union Oil Company of California, Los Angeles, Calif.
Continuation-in-part of Ser. No. 586,946, June 16, 1975, abandoned. This application Jan. 23, 1976, Ser. No. 651,646
Int. Cl.[2] C07C *1/04, 1/12*
U.S. Cl. 260—449.6 M **6 Claims**

1. In a process for the hydrogenation of carbon monoxide and/or carbon dioxide to form methane wherein a feed gas comprising hydrogen and carbon monoxide and/or carbon dioxide is contacted at a temperature between about 600° and 1500° F with a nickel catalyst to effect said hydrogenation, the improvement which comprises using as said catalyst an intimate composite of between about 30 and 95 percent alumina and about 5 and 70 percent nickel oxide by weight, said catalyst having been prepared by the steps of:

1. slurrying a powdered alumina hydrate in an aqueous solution of a nickel salt for a sufficient time to effect pore-saturation of said alumina hydrate with said solution, sufficient of said nickel salt being in the form of an ammino complex to provide at least 2 moles of ammino ligands per mole of said nickel salt;
2. heating the resulting slurry with agitation at a temperature and for a time sufficient to bring about a gradual decomposition of substantially all of said ammino complex with resultant liberation of ammonia and precipitation of substantially all of said nickel salt in the form of nickel hydroxide intimately composited with said powdered alumina hydrate; and
3. calcining the resulting composite at a temperature sufficiently high to convert said alumina hydrate to gamma alumina.

4,064,153
OLIGOMER N-ALKYL-IMINOALANES AND PROCESS FOR THE PREPARATION THEREOF
Salvatore Cucinella; Marco Cesari, and Tito Salvatori, all of San Donato Milanese, Italy, assignors to Snam Progetti S.p.A., Milan, Italy
Filed July 1, 1975, Ser. No. 592,248
Claims priority, application Italy, July 1, 1974, 24663/74
Int. Cl.[2] C07L *5/06*
U.S. Cl. 260—448 R **8 Claims**

1. An oligomer N-alkyl-iminoalane consisting of a plurality of four and/or six membered rings of the formula:

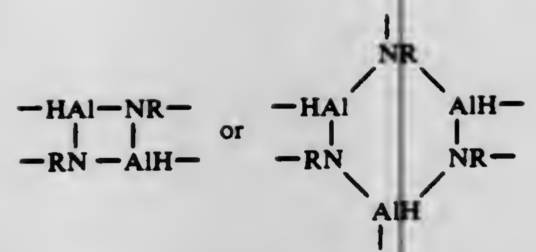

in which R is selected from the group consisting of iso-propyl, sec-butyl, iso-butyl, tert-butyl and cyclo-butyl, combined to form a tridimensional cage structure having the chemical composition $(HAlNR)_n$ in which R has the meaning given above, and n is a whole number lower than or equal to 10.

4,064,154
CATALYSTS AND CARRIERS THEREFOR
Grish Chandra, Penarth, and Brian John Griffiths, Coytrahen, near Bridgend, both of Wales, assignors to Dow Corning Corporation, Midland, Mich.
Division of Ser. No. 629,268, Nov. 6, 1975, Pat. No. 4,005,046. This application Sept. 7, 1976, Ser. No. 721,009
Int. Cl.² C07F *7/08*
U.S. Cl. 260—448.2 E **3 Claims**

1. A process for the preparation of an organosilicon product which comprises reacting in the presence of a composition of matter which is an inorganic particulate solid having chemically bonded to the surface thereof at least one group of the general formula

$$—O—Si\{OSiR'''_2\}_nR'—SR''$$

wherein the R substituents are the same or diffferent and are selected from the group consisting of a chlorine atom, a bromine atom, a monovalent radical having from 1 to 8 inclusive carbon atoms and free of aliphatic unsaturation which is a hydrocarbon radical, a halogenated hydrocarbon radical, an oxyhydrocarbon radical, an oxime radical having less than 14 carbon atoms, an oxygen atom and the radical $—NQ_2$ in which each Q represents a hydrogen atom or an alkyl or an aryl radical having less than 10 carbon atoms, R' represents a divalent hydrocarbon radical having from 1 to 16 inclusive carbon atoms, R'' and R''' represents a monovalent hydrocarbon radical free of aliphatic unsaturation and having from 1 to 8 inclusive carbon atoms and *n* is 0 or an integer of 1 to 20, the sulfur atom in said group being coordinatively bonded to an atom of platinum or rhodium, (1) an organosilicon substance having in the molecule at least one silicon-bonded hydrogen atom and (2) an organic or organosilicon substance containing aliphatic carbon atoms linked by multiple bonds.

4,064,155
PREPARATION OF SILYLAMINE HYDROCHLORIDES
John L. Speier, Midland, Mich., assignor to Dow Corning Corporation, Midland, Mich.
Filed Dec. 22, 1975, Ser. No. 643,222
Int. Cl.² C07F *7/10, 7/18*
U.S. Cl. 260—448.8 R **11 Claims**

1. A process for preparing the hydrochloride salt of a silyl-(alkyl)amine which comprises reacting (1) a silane of the formula $(RO)_nR'_{3-n}SiR''Cl$ with at least two moles per mole of (1) of (2) a compound of the group consisting of R'''_2NH and $HR'''NCH_2CH_2NR'''_2$ to form (3) $\{(RO)_nR'_{3-n}—SiR''\}_mNR'''_{3-m}$, $(RO)_nR'_{3-n}SiR''NR'''CH_2CH_2NR'''_2$ or $\{(RO)_nR'_{3-n}SiR''NR'''CH_2—\}_2$, (3) having a boiling point higher than (2) and thereafter removing unreacted (2) from the reaction zone by volatilization whereby amine hydrochlorides of the formulae $\{(RO)_nR'_{3-n}SiR''\}_mNR'''_{3-m}.HCl$, $(RO)_nR'_{3-n}SiR''NR'''CH_2—CH_2NR'''_2.HCl$ and $\{(RO)_nR'_{3-n}SiR''NR'''CH_2—\}_2.2HCl$ are obtained in which

R is an alkyl or an alkoxyalkyl radical of from 1 to 4 carbon atoms,
n is 2 to 3,
R' is a lower alkyl radical,
R'' is an alkylene radical of 1 to 4 carbon atoms,
R''' is hydrogen or an alkyl radical of 1 to 8 carbon atoms R'''being hydrogen or a methyl radical when (2) is a diamine, and
m is 1 or 2.

4,064,156
METHANATION OF OVERSHIFTED FEED
Henry William McRobbie, Ossining, N.Y., assignor to Union Carbide Corporation, New York, N.Y.
Filed Feb. 2, 1977, Ser. No. 765,060
Int. Cl.² C10J *1/00;* **C07C** *9/04*
U.S. Cl. 260—449.6 M **21 Claims**

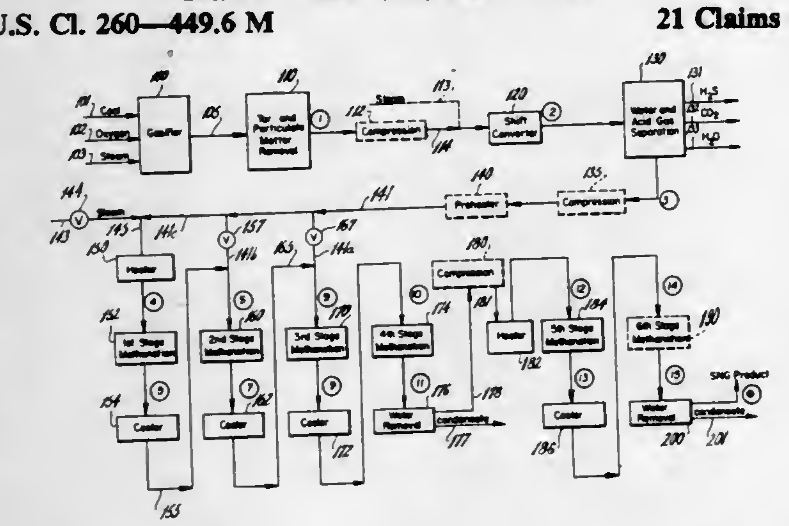

1. A process for the production of methane from a feed gas comprised of hydrogen and carbon oxides in a series of at least two primary and at least one secondary wet, fixed bed, adiabatic, catalytic reaction zones each of which is separated by a cooling zone except the last zone wherein the effluent gas from each of the primary reaction zones is passed through a cooling zone and into the succeeding reaction zone, which process comprises:

a. providing said feed gas, the molar ratio of H_2 to CO in said feed gas being greater than about 4 to 1;
b. removing a portion of said CO_2 from said feed gas to adjust the ratio of H_2 and carbon oxides therein substantially according to the formula:

$$R_3 = x(R_2-(\tfrac{1}{4})(R_0-3R_1))$$

wherein, x = a number between about 0.95 and about 1.07, R_0 = the fraction of hydrogen in said feed gas which is available for methanation of CO and CO_2, R_1 = the molar ratio of CO/H_2 in said feed gas, R_2 = the molar ratio of CO_2/H_2 in said feed gas, and R_3 = the moles CO_2 removed from said feed gas per moles H_2 in said feed gas;
c. splitting said feed gas into a plurality of fractions;
d. introducing a first mixture comprised of steam and a first one of said fractions into said first primary reaction zone at a first inlet temperature above about the minimum initiation temperature of the catalyst therein, the amount of steam in said first mixture being sufficient to prevent both (1) carbon formation on the catalyst in each of said reaction zones and (2) overheating of said catalyst in said first primary reaction zone;
e. adiabatically reacting said first mixture in said first primary reaction zone to produce an effluent gas the steam, carbon oxides and hydrogen molar content in said first mixture being sufficient to moderate the temperature rise upon methanation from said first inlet temperature to a first outlet temperature below about the maximum operating temperature of said catalyst in said first primary reaction zone;
f. introducing the effluent gas from said first and each succeeding primary reaction zone into a cooling zone wherein its temperature is regulated from the outlet temperature of the preceding primary reaction zone to a temperature sufficient to raise the inlet temperature of a second mixture and each succeeding mixture fed into the next primary reaction zone above about the minimum initiation temperature of the catalyst in the primary reaction zone to which the mixture is fed, said second mixture and each succeeding mixture comprised of one of said fractions and the cooled effluent gas from the primary reaction zone preceding the one to which the mixture is fed;
g. forming said second mixture and each of said succeeding mixtures, the molar ratio of each of said fractions to the cooled effluent gas in each of said mixtures being sufficient to moderate the temperature rise upon its methanation from said inlet temperature above about the minimum initiation temperature to an outlet temperature below the maximum operating temperature of the catalyst in the reaction zone to which the mixture is fed;
h. introducing said second mixture and each of said succeeding mixtures into the primary reaction zone succeeding the one whose effluent gas is employed to form the mixture;
i. adiabatically reacting said second mixture and each of said succeeding mixtures to produce an effluent gas having said outlet temperature specified in step (g);
j. introducing the effluent gas from the last of said primary reaction zones and each succeeding secondary wet reaction zone into a cooling zone wherein its temperature is regulated from an outlet temperature below about the maximum operating temperature of the catalyst in the preceding reaction zone to an inlet temperature above about the minimum initiation temperature of the catalyst in the succeeding reaction zone;
k. adiabatically reacting the cooled effluent gas from step (j) in the succeeding secondary, wet reaction zone to produce a product gas rich in methane having a temperature below about the maximum operating temperature of the catalyst in the last of said secondary, wet reaction zones, the temperature rise in each of said secondary, wet reaction zones moderated by the steam, carbon oxides and hydrogen molar content in the cooled effluent gas from step (j); and
m. condensing a substantial portion of the steam present in said product gas to water which is removed from said product gas.

4,064,157
STABILIZATION OF POLYISOCYANATES AGAINST DISCOLORATION
John L. Nafziger, and John M. Motes, both of Lake Jackson, Tex., assignors to The Dow Chemical Company, Midland, Mich.
Filed Mar. 29, 1976, Ser. No. 671,201
Int. Cl.² C07C *119/042*
U.S. Cl. 260—453 SP **18 Claims**

1. A polyisocyanate containing as a stabilizer against discoloration, from about 20 to about 2500 ppm of a stabilizer selected from the group consisting of

1. o,o-di-n-octadecyl-3,5-di-tert-butyl-4-hydroxybenzylphosphonate,
2. tetrakis(methylene(3,5-di-tert-butyl-4-hydroxyhydrocinnamate))methane,
3. bis(2- (4-hydroxy-3,5-di-tert-butylphenyl) ethyl)sulfide,
4. octadecyl-3,5-di-tert-butyl-4-hydroxy-hydrocinnamate, and
5. mixtures thereof.

7. A polyisocyanate containing as a stabilizer against discoloration from about 10 ppm to about 250 ppm of a mixture comprising

A. an organic phosphite selected from the group consisting of
1. triphenyl phosphite,
2. diphenylisodecyl phosphite,
3. trisnonylphenyl phosphite,
4. triisodecyl phosphite,
5. trilauryl phosphite, and
6. mixtures thereof; and

B. a member of the group consisting of
1. o,o-di-n-octadecyl-3,5-di-tert-butyl-4-hydroxybenzylphosphonate,
2. tetrakis(methylene(3,5-di-tert-butyl-4-hydroxyhydrocinnamate))methane,
3. bis(2-(4-hydroxy-3,5-di-tert-butylphenyl)ethyl)sulfide,
4. octadecyl-3,5-di-tert-butyl-4-hydroxyhydrocinnamate, and
5. mixtures thereof; and

wherein the equivalent ratio of B:A is from about 0.01:1 to about 10:1.

4,064,158
PROCESS FOR THE PREPARATION OF AN ORGANOMERCAPTOPHENOL FROM SULFUR, A 2,6-DISUBSTITUTED PHENOL, AND AN ACTIVATED OLEFIN OR AN EPOXY COMPOUND
Allan S. Hay, Schenectady, N.Y., assignor to General Electric Company, Schenectady, N.Y.
Division of Ser. No. 484,996, July 1, 1974, Pat. No. 3,979,460. This application June 18, 1976, Ser. No. 697,335
Int. Cl.² C07C *121/60*
U.S. Cl. 260—465 F **11 Claims**

1. A process for the preparation of an organomercaptophenol which comprises the reaction of a member of the class consisting of sulfur, an alkali metal sulfide, an alkaline earth metal sulfide, or an ammonium sulfide, with a phenol of the formula

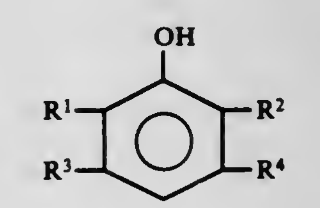

wherein independently each R^1 and R^2 is a monovalent substituent selected from the group consisting of hydrocarbon and hydrocarbonoxy radicals, and each R^3 and R^4 is a monovalent substituent selected from the group consisting of hydrogen, hydrocarbon and hydrocarbonoxy radicals, said reaction being carried out in the presence of (1) a base, (2) a member of the class consisting of an activated olefin or an epoxy compound, (3) and a solvent having a dielectric constant greater than about 20.

4,064,159
PROCESS FOR PREPARING ALPHA-AMINO-GAMMA-METHYLMERCAPTOBUTYRONITRILE
Yves Labat, and Aristide Boy, both of Pau, France, assignors to Produits Chimiques Du Bearn, Pau, France
Filed Oct. 12, 1976, Ser. No. 731,628
Claims priority, application France, Oct. 10, 1975, 75.31163; Sept. 24, 1976, 76.28786
Int. Cl.² C07C *121/43, 120/00*
U.S. Cl. 260—465.5 R **9 Claims**

1. A process for preparing alpha-amino-gamma-methylmercaptobutyronitrile by aminating, by means of ammonia, alpha-hydroxy-gamma-methylmercaptobutyronitrile at a temperature of 50° C to 100° C, wherein the ammonia is accompanied by an amount of water, the molar NH_3/alpha-hydroxy-gamma-methylmercaptobutyronitrile ratio in the reaction medium being 2 to 10, the H_2O/alpha-hydroxy-gamma-methylmercaptobutyronitrile ratio in the reaction medium being 4 to 20, and the molar H_2O/NH_3 ratio being 1 to 3, for 1 to 30 minutes at a pressure of 1 to 10 bars.

4,064,160

2,2-DIFLUORO-16-PHENOXY-13,14 DIHYDRO-PGE, ANALOGS

Udo F. Axen, Plainwell, Mich., assignor to The Upjohn Company, Kalamazoo, Mich.
Division of Ser. No. 552,708, Feb. 24, 1975, Pat. No. 4,001,300. This application Sept. 17, 1976, Ser. No. 724,237
Int. Cl.² C07C *65/22*
U.S. Cl. 560—53 **58 Claims**

1. A compound of the formula

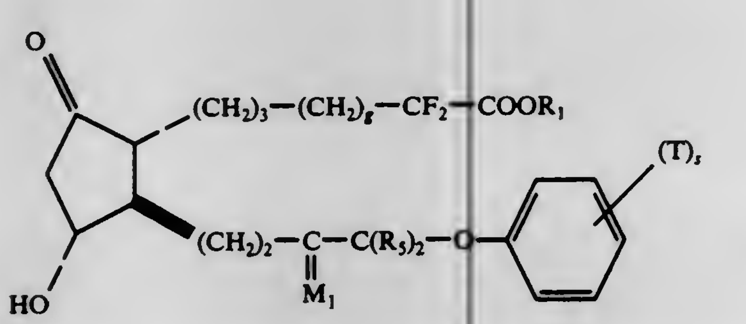

or a mixture comprising that compound and the enantiomer thereof,

wherein g is 2 to 4, inclusive;
wherein M_1 is

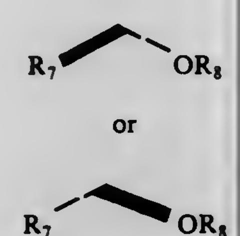

wherein R_7 and R_8 are hydrogen or methyl, with the proviso that one of R_7 or R_8 is methyl only when the other is hydrogen;
wherein T is alkyl of one to 3 carbon atoms, inclusive, fluoro, chloro, trifluoromethyl, or $-OR_4$ wherein R_4 is alkyl of one to 3 carbon atoms, inclusive, and wherein s is zero, one, 2, or 3, with the proviso that not more than two T's are other than alkyl;
wherein R_1 is hydrogen, alkyl of one to 12 carbon atoms, inclusive, cycloalkyl of 3 to 10 carbon atoms, inclusive, aralkyl of 7 to 12 carbon atoms, inclusive, phenyl, phenyl substituted with one, 2, or 3 chloro, alkyl of one to 4 carbon atoms, inclusive, or a pharmacologically acceptable cation,

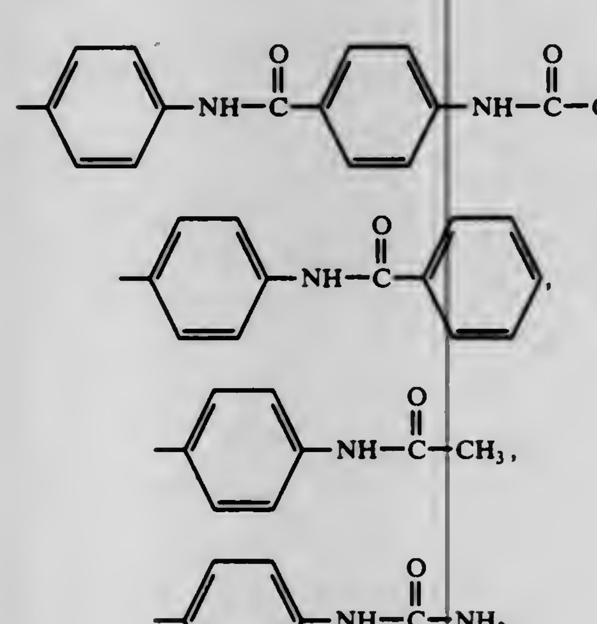

-continued

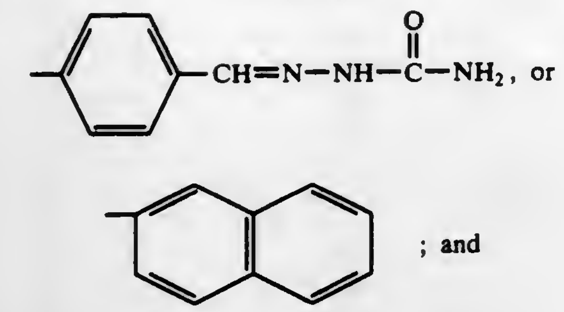

wherein R_5 is hydrogen or methyl, with the proviso that R_5 is methyl only when R_7 and R_8 are both hydrogen.

4,064,161

POLYMERS HAVING PENDANT ACRYLATE AND METHACRYLATE FUNCTIONALITY

Sheldon N. Lewis, Willow Grove, and Richard A. Haggard, Fort Washington, both of Pa., assignors to Rohm and Haas Company, Philadelphia, Pa.
Continuation-in-part of Ser. No. 371,921, June 20, 1973, abandoned, which is a continuation-in-part of Ser. No. 137,057, April 23, 1971, abandoned. This application Oct. 23, 1974, Ser. No. 517,335
Int. Cl.² C07C *69/54*
U.S. Cl. 526—320 **11 Claims**

1. In an anionically polymerized addition polymer of at least one ester of methacrylic acid the improvement wherein the polymer comprises mers having the formula

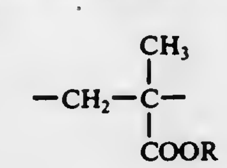

wherein R is an acryloyloxyalkyl or a methacryloyloxyalkyl group, having up to 4 carbon atoms in the alkyl portion, and, optionally, mers derivable from other anionically copolymerizable monomers, and wherein, n, the average chain length of the polymer, is about 6 to 50 mers.

4,064,162

SYNTHESIS OF INTERMEDIATES FOR VITAMIN A

William Oroshnik, Plainfield, N.J., assignor to SCM Corporation, New York, N.Y.
Division of Ser. No. 566,982, April 10, 1975, which is a division of Ser. No. 353,215, April 23, 1973, Pat. No. 3,949,006, which is a continuation-in-part of Ser. No. 246,939, April 24, 1972, abandoned. This application Feb. 17, 1976, Ser. No. 658,188
Int. Cl.² C07C *41/00, 67/28, 175/00*
U.S. Cl. 560—234 **5 Claims**

1. A process for forming a class of compounds having the general formula:

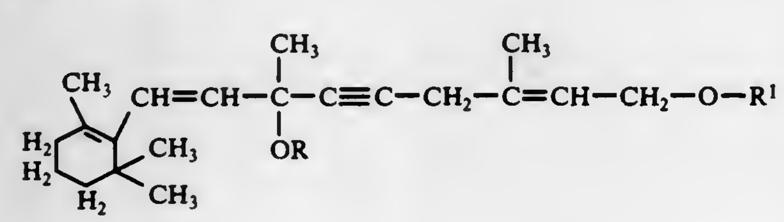

in which R is lower alkyl, lower alkenyl, phenyl or aralkyl having up to 10 carbon atoms and R^1 is hydrogen or

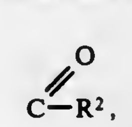

R^2 being lower alkyl, phenyl, or aralkyl having up to 10 carbon atoms, comprising coupling the acetylenyl group of a compound having the general formula:

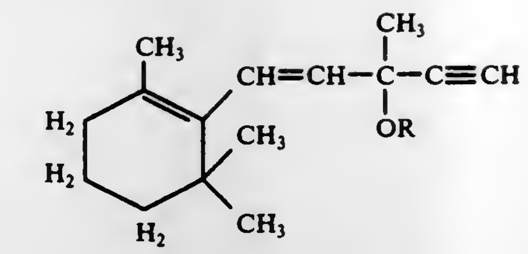

(I)

in which R has the same meaning with a reactant having the general formula:

$$R^3-CH_2-\overset{CH_3}{\overset{|}{C}}=CH-CH_2-O-R^1 \quad (II)$$

in which R^3 is halogen and R^1 is as defined above by first forming the cuprous acetylenyl derivative of a compound of Formula I and then reacting said derivative with a compound of the Formula II.

4,064,163

PROCESS FOR THE MANUFACTURE OF ALIPHATIC PHOSPHONIC ACIDS

John E. Drach, Cheltenham, and Barry J. Pendell, Lansdale, both of Pa., assignors to Amchem Products, Inc.
Filed Dec. 30, 1976, Ser. No. 755,927
Int. Cl.² C07F *9/38*
U.S. Cl. 260—502.4 R **35 Claims**

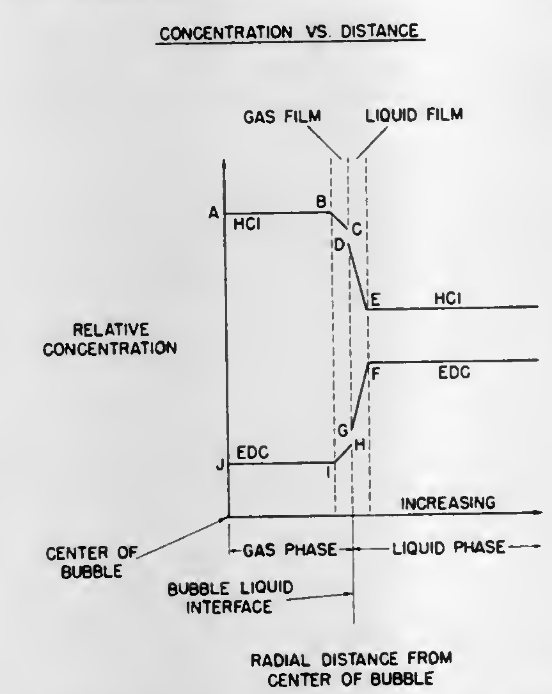

1. In a process for the manufacture of an aliphatic phosphonic acid of the formula:

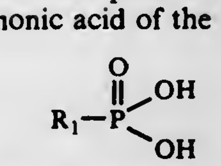

of the type wherein a diester of the aliphatic phosphonic acid of the general formula:

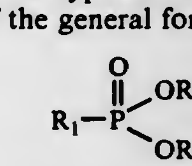

is reacted with anhydrous hydrogen halide selected from the group consisting of hydrogen chloride, hydrogen bromide, hydrogen iodide and hydrogen fluoride to produce a reaction product containing the corresponding aliphatic phosphonic acid and the corresponding aliphatic halides,

wherein R_1, R_2 and R_3 are each independently selected from the group consisting of substituted and unsubstituted aryl, alkyl, alkenyl, halo-substituted alkyl and halosubstituted alkenyl, having from 1 to 6 carbon atoms, wherein the improvement comprises

a. reacting the diester and the anhydrous hydrogen halide at a first temperature of at least 100° C, at a low pressure and for a first period of time to form a first reaction product;
b. subsequently reacting the first reaction product and the anhydrous hydrogen halide at a second temperature of at least 100° C, at a high pressure, said high pressure higher than said low pressure, and for a second period of time to form a second reaction product; and
c. removing the aliphatic halides from at least one reaction product.

4,064,164

1,3-DI-AMINO-ALKANE-1,1-DIPHOSPHONIC ACIDS AND SALTS

Helmut Blum, and Karl-Heinz Worms, both of Dusseldorf, Germany, assignors to Henkel Kommanditgesellschaft auf Aktien, Dusseldorf-Holthausen, Germany
Filed July 16, 1976, Ser. No. 705,793
Claims priority, application Germany, Aug. 1, 1975, 2534390
Int. Cl.² C07F *9/38;* C02B *5/06;* A61K *7/22*
U.S. Cl. 260—502.5 **7 Claims**

1. A 1,3-di-amino-alkane-1,1-diphosphonic acid compound of the formula

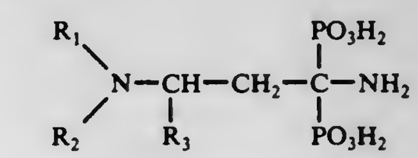

wherein R_1 and R_2 are members selected from the group consisting of hydrogen and alkyl having from 1 to 3 carbon atoms and R_3 is a member selected from the group consisting of hydrogen and methyl and a non-toxic, pharmaceutically-acceptable water-soluble salt thereof.

4,064,165

15-ETHYNYL-PGE₁

George E. M. Husbands, Philadelphia, Pa., assignor to American Home Products Corporation, New York, N.Y.
Division of Ser. No. 568,212, April 14, 1975, Pat. No. 4,001,314. This application Aug. 25, 1976, Ser. No. 717,725
Int. Cl.² C07C *177/00*
U.S. Cl. 260—514 D **3 Claims**

1. A compound of the formula:

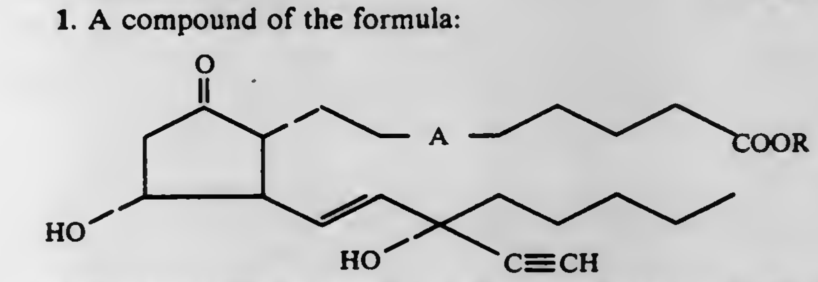

wherein A is a single bond; and R is hydrogen, alkyl of from 1 up to about 6 carbon atoms, alkali metal, or a pharmacologically acceptable cation derived from ammonia or a basic amine.

4,064,166

ETHERIFICATION OF BARK EXTRACTS

Karl David Sears, and Ronald Leroy Casebier, both of Shelton, Wash., assignors to International Telephone and Telegraph Corporation, New York, N.Y.
Division of Ser. No. 277,521, Aug. 3, 1972, Pat. No. 3,970,691. This application Apr. 5, 1976, Ser. No. 673,614
Int. Cl.² C07C *143/44*
U.S. Cl. 260—511 **4 Claims**

1. Water soluble etherified polyphenolic derivatives of coniferous tree barks produced by reacting a sulfonated polyphenolic extract of a coniferous tree bark in the proportion of about 0.1 to 0.8 moles per mole of monomeric unit in the polyphenol with a halocompound selected from the group consisting of monochloroacetone and 3-chloroacetylacetone, said bark extract being sulfonated with a salt selected from the group consisting of ammonium, sodium and potassium salts of sulfurous acid, said reaction being carried out at a temperature of from about 50°-120° C. in an alkaline solution.

4,064,167

DIHYDROCHALCONE OLIGOMERS

Grant E. DuBois, and Guy A. Crosby, both of Palo Alto, Calif., assignors to Dynapol, Palo Alto, Calif.

Continuation-in-part of Ser. No. 635,550, Nov. 26, 1975, abandoned. This application Aug. 30, 1976, Ser. No. 718,719

Int. Cl.[2] C07C *143/24;* **A23L** *1/22*

U.S. Cl. 260—511 **18 Claims**

1. A salt, selected from the sodium, potassium, calcium and magnesium salts of a dihydrochalcone oligomer having a structure represented by the formula:

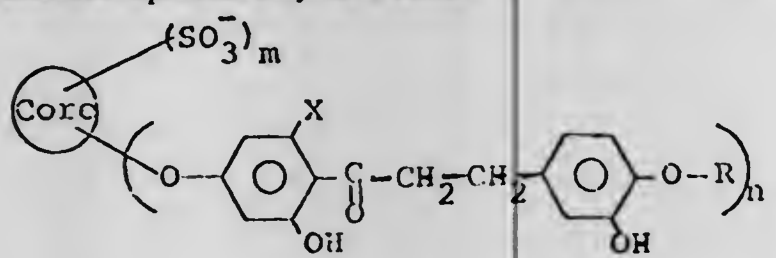

wherein *Core* is a toxicologically acceptable organic group having $n + m$ valences selected from the hydrocarbons which consist of alkylenes of from 3 to about 12 carbons, cycloalkylenes of from 5 to about 9 carbons, arylenes of 6 or 10 carbons and aralkylenes of from 8 to about 24 carbons; and the oxyhydrocarbons which consist of linear alkylenes of from 3 to 12 carbons containing from 1 to 6 oxygens as hydroxyl groups, linear alkylenes of from 3 to 12 carbons containing 1 to 6 oxygens as ether groups, cycloalkylenes of from 5 to 9 carbons containing from 1 to 6 oxygens as hydroxyl groups, and aralkylenes of from 8 to 24 carbons containing from 1 to 6 oxygens as aliphatic hydroxyl groups; and wherein X is hydrogen or hydroxyl, R is a lower alkyl of from 1 to 3 carbon atoms inclusive, *m* is an integer of from 1 to 6 inclusive, *n* is an integer of from 2 to 6 inclusive and the ratio *n/m* has a value not greater than 2.0.

4,064,168

N-(VINYLPHENYL) SULFONAMIDES

Carl Kotlarchik, Jr.; Louis M. Minsk, and George L. Fletcher, Jr., all of Rochester, N.Y., assignors to Eastman Kodak Company, Rochester, N.J.

Division of Ser. No. 541,678, Jan. 16, 1975, Pat. No. 4,032,518. This application Dec. 20, 1976, Ser. No. 752,367

Int. Cl.[2] C07C *143/75, 143/79*

U.S. Cl. 260—556 A **4 Claims**

1. A N-(vinylphenyl)sulfonamide having the formula:

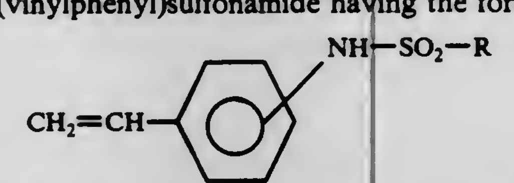

wherein R is selected from the group consisting of alkyl or substituted alkyl containing from 1 to 10 carbon atoms and aryl or substituted aryl containing from 6 to 10 carbon atoms, said substituents being selected from those which do not adversely affect the vesicular properties of any polymer or copolymer formed from said N-(vinylphenyl) sulfonamide.

4,064,169

BIS-(META-AMIDINOPHENOXY)-COMPOUNDS AND PHARMACOLOGICALLY ACCEPTABLE ACID ADDITION SALTS THEREOF

Sachiyuki Hamano, Tokyo; Tamotsu Kanazawa, Tokorozawa, and Shin-ichi Kitamura, Tokyo, all of Japan, assignors to Eisai Co., Ltd., Tokyo, Japan

Division of Ser. No. 725,673, Sept. 22, 1976, Pat. No. 4,034,010. This application Apr. 14, 1977, Ser. No. 787,462

Claims priority, application Japan, Jan. 13, 1976, 51-2458

Int. Cl.[2] C07C *123/00*

U.S. Cl. 260—564 R **5 Claims**

1. A bis-(meta-amidinophenoxy)-compound having the formula:

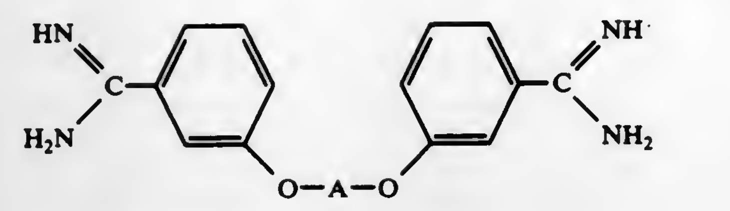

wherein A represents the chain residue

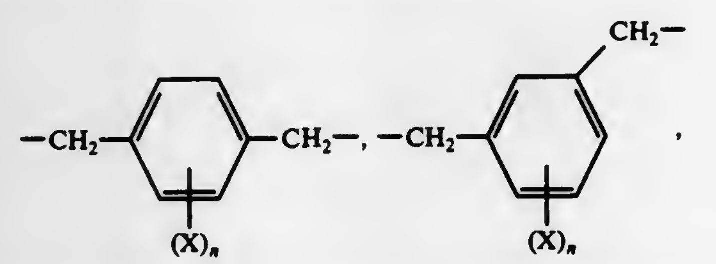

in which X represents a chlorine atom, *n* is an integer of 0 to 4; and its pharmacologically acceptable acid addition salts.

4,064,170

PREPARATION OF METHYLENE-BRIDGED POLYARYLPOLYAMINE MIXTURES

Edward T. Marquis, Austin, Tex., assignor to Texaco Development Corporation, New York, N.Y.

Filed Sept. 15, 1976, Ser. No. 723,276

Int. Cl.[2] C07C *85/24*

U.S. Cl. 260—570 D **6 Claims**

1. In the process for the preparation of methylene-bridged polyarylpolyamine mixtures by the condensation reaction of an aromatic primary amine having the formula:

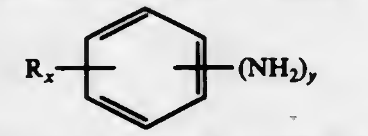

wherein *x* is 0 to 3, *y* is 1 to 2 and R is selected from the group consisting of alkyl having from 1 to 10 carbon atoms, lower alkoxy having 1 to 10 carbon atoms, chlorine, bromine or nitro, and formaldehyde carried out in the presence of an acid-containing material catalyst at elevated temperatures the improvement comprising:

employing nitrilotriacetic acid as said acid-containing material catalyst, wherein said aromatic primary amine having said formula and formaldehyde are mixed with a catalytic amount of said nitrilotriacetic acid and heated to a temperature of about 100° C to about 350° C under a pressure within the range of from atmospheric to about 300 psig for a time period of from about 10 minutes to about 4 hours; and

recovering the methylene-bridged polyarylpolyamine mixture from the resulting reaction product.

4,064,171

PROCESS FOR PREPARATION OF AROMATIC AMINES

Frank Julian Weigert, Wilmington, Del., assignor to E. I. Du Pont de Nemours and Company, Wilmington, Del.

Continuation-in-part of Ser. No. 611,914, Sept. 10, 1975, abandoned, which is a continuation-in-part of Ser. No. 488,825, July 15, 1974, abandoned. This application June 9, 1976, Ser. No. 694,554

Int. Cl.[2] C07C *85/02*

U.S. Cl. 260—581 **36 Claims**

1. The process which consists in heating a cyclic aliphatic hydrocarbon of the formula

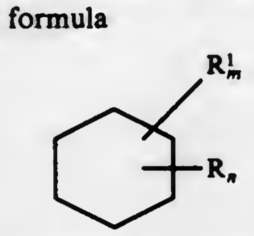

with ammonia at 300°-650° C. to produce a compound of the formula

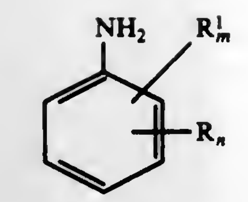

wherein

R and R^1 individually are alkyl of 1–4 carbon atoms and *m* and *n* individually are 0 or 1,

where the heating is carried out in the presence of about 1 to 70 mole percent of water based on the total amount of water and the said cyclic aliphatic hydrocarbon, at a contact time of about 0.1 second to about 10 minutes, and in the presence of a catalyst selected from:

A. one or more oxides of Al, Cd, Ce, Fe, In, Sn, Ti, Th, Zn and Zr;

B. vanadium oxide and one or more oxides of Ag, As, Ba, Ca, Cd, Ce, Co, Cu, Eu, Fe, Gd, Hf, In, La, Mg, Mn Ni, P, Pb, Sb, Sn, Sr, Ti, U and Zn;

C. titanium oxide and one or more oxides of Bi, Cr, Cu, Mo, Pb, U and W;

D. zinc oxide and one or more oxides of Cr, La, Mg, P, Si, Sb, W and the pair of Bi and Mo;

E. aluminum oxide and one or more oxides of Cu, Eu, La, Mn, Pb and U;

F. aluminum oxide, molybdenum oxide and one or more oxides of Ca, Cd, Ce, Cu, Er, Fe, In, La, Ni, Pb, Sm, Sr, Ti, U, Y and Zn;

G. aluminum oxide, tungsten oxide and one or more oxides of Ca, Ce, Cu, Fe, In, La, Pb, Sm, Ti, U and Zn;

H. aluminum oxide, titanium oxide and one or more oxides of Cr, Mg, Te and V;

I. aluminum oxide, titanium oxide, zinc oxide and one or more oxides of Ag, Bi, Ca, Co, Cr, Cu, Hg, Mg, Nb, Ni, Pb, Pr, Ru, Sm, Sr, V, Yb and Y;

J. aluminum oxide, molybdenum oxide, bismuth oxide and one or more oxides of Ca, Cu, Pb, Ti and Zn;

K. aluminum oxide, molybdenum oxide, zirconium oxide and one or more oxides of Ce, Ti and Zn;

L. molybdenum oxide and one or more oxides of Cd, Ce, Cu, Fe, Gd, La, Mg, Mn, Nb, P, Pb, Ti and Zn;

M. zinc oxide, titanium oxide and one or more oxides of Cr, La, Mg and Nb; and

N. CdS; CoS; CdS/aluminum oxide; CdS/titanium oxide/aluminum oxide; chromium sulfide; ZnSe; ZnS; ZnTe; ZnS/aluminum oxide; CdS/ZnS/aluminum oxide; and WS_2;

O. Aluminum oxide, vanadium oxide and one or more oxides of Ag, Ba, Ca, Cd, Cu, Ga, In, La, Mg, Pb, Sr, Y, Zn and Zr; and

P. Zinc oxide, titanium oxide, lanthanum oxide and one or more oxides of Al, Cd, Ce, Th and Zr.

4,064,172

HEXAMETHYLENE DIAMINE BY HYDROGENATION OF ADIPONITRILE IN PRESENCE OF AN ACTIVATED IRON OXIDE CATALYST

Thomas Gordon Dewdney; Dennis Albert Dowden, both of Stockton-on-Tees, and Wyndham Morris, Stockport, all of England, assignors to Imperial Chemical Industries Limited, London, England

Division of Ser. No. 480,274, June 17, 1974, Pat. No. 3,986,985. This application Aug. 3, 1976, Ser. No. 711,372

Claims priority, application United Kingdom, Sept. 12, 1973, 42881/73

Int. Cl.[2] C07C *85/12*

U.S. Cl. 260—583 K **3 Claims**

1. A process for the hydrogenation of an adiponitrile to hexamethylene diamine with hdyrogen in the presence of a catalyst obtained by heating, in the presence of hydrogen at a temperature above 200° but not above 600° C and at pressures up to 500 atmospheres, a fused and solidified iron oxide in the form of particles suitable for use in a fixed bed of catalyst, the fused material containing not less than 96.5% of iron oxide, which oxide has an atomic ratio of oxygen to iron within the range 1.2 : 1 to 1.4 : 1 which process comprises heating adiponitrile in the presence of the said catalyst and in the presence of excess hydrogen and of ammonia at a temperature of 80° to 200° C and a pressure of 20 to 500 atmospheres.

4,064,173

9,10-SECO-STEROIDS

Jean-Marie Cassal, St. Louis, France; Andor Furst, Basel, and Werner Meier, Bottmingen, both of Switzerland, assignors to Hoffmann-La Roche, Inc., Nutley, N.J.

Division of Ser. No. 533,101, Dec. 16, 1974, abandoned. This application Jan. 23, 1976, Ser. No. 651,763

Claims priority, application Switzerland, Dec. 21, 1973, 18029/73

Int. Cl.[2] C07C *49/27*

U.S. Cl. 260—586 E **10 Claims**

1. A compound of the formula

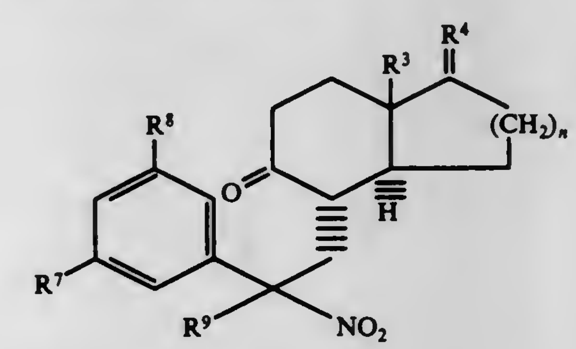

wherein R^3 is lower alkyl; R^4 is

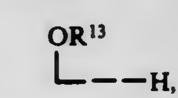

wherein R^{13} is lower alkyl; R^7 and R^8 are each independently hydrogen, benzyloxy, diphenylmethoxy, triphenylmethoxy or OR^5 wherein R^5 is lower alkyl; R^9 is hydrogen; and *n* is 1 or 2.

9. The compound 17β-tert.-butoxy-3,6-dinitro-9,10-seco-estra-1,3,5(10)-trien-9-one.

10. The compound 17β-tert.-butoxy-3,6-dinitro-18-methyl-9,10-seco-estra-1,3,5(10)-trien-9-one.

4,064,174

PREPARATION OF 2-HALOCYCLOBUTANONES

Herman Verbrugge, Amsterdam, Netherlands, assignor to Shell Oil Company, Houston, Tex.

Filed Mar. 1, 1976, Ser. No. 662,173

Claims priority, application United Kingdom, Jan. 6, 1976, 329/76

Int. Cl.[2] C07C *45/00, 45/02*

U.S. Cl. 260—586 C **12 Claims**

1. A process for the preparation of a 2-halocyclobutanone, wherein the halogen atom has an atomic number of up to 35, in which process a 2,2-dihaloalkanoyl halide, wherein the halogen atoms have an atomic number of up or 35, is contacted in the presence of an alkanone which has at least two branches in the carbon skeleton of the molecule and of which not more than one of the two carbon atoms attached to the carbonyl group is quaternary, with an ethylenically unsaturated compound at a temperature in the range of from about 5° to 55° C in the presence of dispersed zine or tin in a molar ratio of zinc or tin to 2,2-dihaloalkanoyl halide below 1.00 and wherein the zinc or tin is in the form of particles having a largest dimension of up to 0.05 mm.

4,064,175

ORGANIC NITROGEN-CONTAINING INITIATORS FOR HYDROCARBON CONVERSION

Matthew A. McMahon, Wappingers Falls, N.Y., assignor to Texaco Inc., New York, N.Y.

Filed Oct. 4, 1976, Ser. No. 729,557

Int. Cl.² C07C *27/12, 29/00, 45/02*

U.S. Cl. 260—586 P **16 Claims**

1. The process for preparing an oxygen-containing oxidation product containing at least one composition selected from the group consisting of alcohols, ketones and aldehydes, from a charge alkyl, alkaryl or cycloalkyl hydrocarbon which comprises:

oxidizing alkyl, alkaryl or cycloalkyl hydrocarbon at 75°-200° C in the presence of (i) an oxygen-containing gas and (ii) an oxidation initiator containing an initiating quantity of an alkyl, aralkyl or cycloalkyl nitrite, thereby forming reaction mixture including said oxygen-containing oxidation product; and

recovering said reaction mixture including said oxygen-containing oxidation product.

4,064,176

DI-SUBSTITUTED META-TERPHENYL COMPOUNDS AND RESULTING POLYMERS

Guy Rabilloud, and Bernard Sillion, both of Grenoble, France, assignors to Institut Francais du Petrole, Rueil Malmaison, France

Division of Ser. No. 533,822, Dec. 18, 1974. This application Dec. 23, 1975, Ser. No. 643,836

Claims priority, application France, Dec. 19, 1973, 73.45637

Int. Cl.² C07C *49/76*

U.S. Cl. 260—590 D **6 Claims**

1. A composition consisting essentially of a mixture of both 4,4'- and 4',4''-disubstituted metaterphenyl derivatives of the formulae:

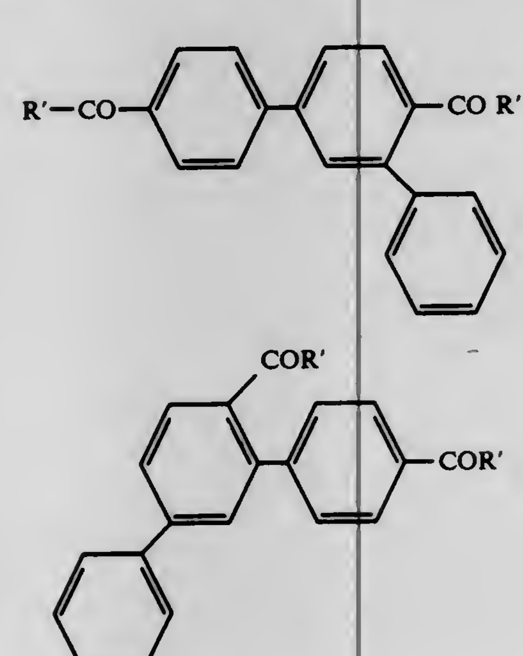

in which R' is methyl, chloromethyl, bromomethyl, dichloromethyl, dibromomethyl, ethyl, benzyl, phenylchloromethyl, or phenyl-dichloromethyl or dibromomethyl.

4,064,177

3-ALKOXY-D-HOMO-C-NOR-13, 14-GONA-1,3,5,(10),6,8-PENTAEN-17-ONE AND DERIVATIVES THEREOF

Richard M. Weier, Deerfield, Ill., assignor to G. D. Searle & Co., Chicago, Ill.

Filed Apr. 11, 1977, Ser. No. 786,303

Int. Cl.² C07C *49/76, 49/82, 49/84*

U.S. Cl. 260—590 FB **9 Claims**

1. A compound of the formula

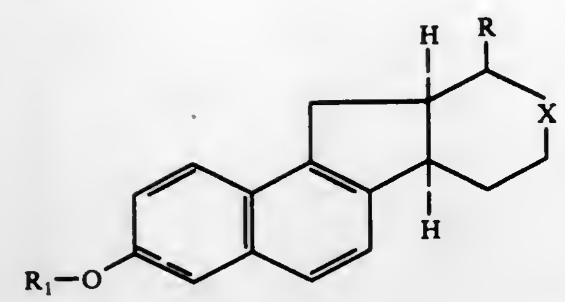

wherein R is hydrogen or alkyl contaning 1 to 6 carbon atoms; R_1 is hydrogen or alkyl containing 1 to 6 carbon atoms and X is a carbonyl group or a group of the formula

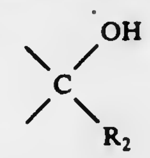

wherein R_2 is hydrogen, ethynyl or alkyl containing 1 to 3 carbon atoms.

4,064,178

BIS(4-CHLOROPHENYL)METHYL METHYL SULFOXIDE

George G. Ecke, Barberton, Ohio, assignor to PPG Industries, Inc., Pittsburgh, Pa.

Continuation-in-part of Ser. No. 578,598, May 19, 1975, abandoned. This application June 30, 1976, Ser. No. 701,383

Int. Cl.² C07C *147/14;* **A01N** *9/14*

U.S. Cl. 260—607 AR **1 Claim**

1. Bis(4-chlorophenyl)methyl methyl sulfoxide.

4,064,179

ORGANOMERCAPTOPHENOL

Allan S. Hay, Schenectady, N.Y., assignor to General Electric Company, Schenectady, N.Y.

Division of Ser. No. 484,986, July 1, 1974, Pat. No. 3,952,063. This application Jan. 16, 1976, Ser. No. 649,708

Int. Cl.² C07C *149/36*

U.S. Cl. 260—609 F **5 Claims**

1. An organomercaptophenol of the formula:

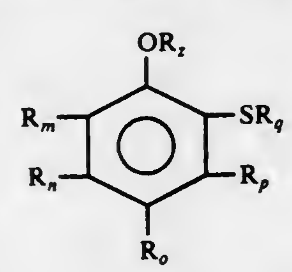

wherein independently each R_m, R_n, R_o and R_p is hydrogen, or a hydrocarbon or hydrocarbonoxy radical, R_q and R_z are hydroxy substituted monovalent acyclic or cyclic hydrocarbon radicals.

4,064,180

ALKYL ETHERS OF BINOR-S

Abraham Schneider, Overbrook Hills, and Edward J. Janoski, Havertown, both of Pa., assignors to Sun Ventures, Inc., St. Davids, Pa.

Filed May 16, 1975, Ser. No. 578,308

Int. Cl.² C07C *43/18*

U.S. Cl. 260—611 F **24 Claims**

17. Alkyl ethers of Binor-S having the following structures:

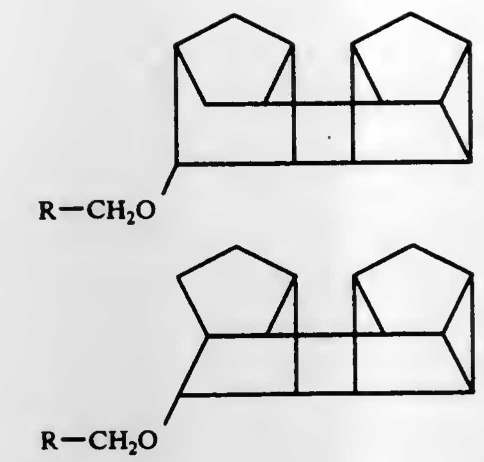

wherein R is a hydrogen or a paraffinc alkyl containing C_1-C_{10} atoms.

4,064,181

PREPARATION OF NOVEL ETHERS

Pierre Pesnelle, Rueil-Malmaison, and Paul José Teisseire, Grasse, both of France, assignors to Societe Anonyme Roure Bertrand Dupont, Paris, France

Division of Ser. No. 444,488, Feb. 21, 1974. This application Sept. 16, 1976, Ser. No. 723,719

Claims priority, application Switzerland, Feb. 28, 1973, 2885/73

Int. Cl.² C07C *43/20, 43/00*

U.S. Cl. 260—611 F **1 Claim**

1. Compounds of the formula

XI

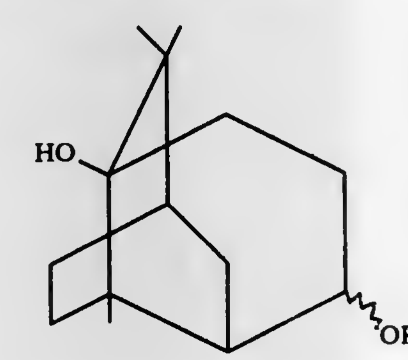

wherein R^1 represents methyl or benzyl.

4,064,182

PREPARATION OF SECONDARY ALKANOL ALKOXYLATES

John L. Riddle, Humble, Tex., assignor to Continental Oil Company, Ponca City, Okla.

Continuation-in-part of Ser. No. 597,845, July 21, 1975, abandoned. This application Jan. 21, 1977, Ser. No. 761,184

Int. Cl.² C07C *41/02*

U.S. Cl. 260—615 B **6 Claims**

1. In a process for preparing high mole secondary alkanol alkoxylates by the reaction of a low mole secondary alkanol alkoxylate with an alkylene oxide in the presence of a caustic catalyst, the improvement comprising conducting the process with a low mole secondary alkanol alkoxylate which has been reacted with hydrogen under pressure in the presence of a hydrogenation catalyst, said process being characterized further in that the terms low mole and high mole refer to numbers in the range of 1 to 4.9 and 5 to about 30, respectively and wherein said alkylene oxide is represented by the formula

$$\begin{array}{l} R' \\ | \\ CHCH_2O \end{array}$$

wherein R' is hydrogen or a C_1-C_5 alkyl group, wherein the hydrogen treatment is conducted at a temperature in the range of about 100° to about 170° C and a hydrogen pressure in the range of about 34 to about 136 atmospheres.

4,064,183

SYNTHESIS OF VITAMIN A, INTERMEDIATES AND CONVERSION THEREOF TO VITAMIN A

William Oroshnik, Plainfield, N.J., assignor to SCM Corporation, New York, N.Y.

Division of Ser. No. 566,981, April 10, 1975, Pat. No. 4,035,425, which is a division of Ser. No. 353,215, April 23, 1973, Pat. No. 3,949,006, which is a continuation-in-part of Ser. No. 246,939, April 24, 1972, abandoned. This application Mar. 1, 1976, Ser. No. 662,333

Int. Cl.² C07C *29/00*

U.S. Cl. 260—617 A **2 Claims**

1. A process for forming Vitamin A which includes the steps of;

pre-preparation of a class of compounds having the general formula:

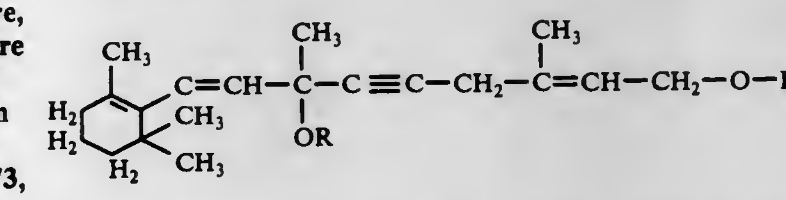

(III)

in which R is a lower alkyl, lower alkenyl, phenyl or aralkyl and R^1 is hydrogen or

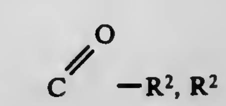

being lower alkyl, phenyl, or aralkyl, said pre-preparation comprising coupling the acetylenyl group of a compound having the general formula:

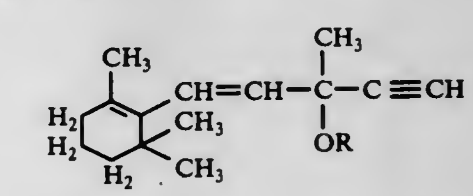

(I)

in which R has the same meaning with a reactant having the general formula:

$$R^3-CH_2-\overset{\overset{\displaystyle CH_3}{|}}{C}=CH-CH_2-O-R^1 \qquad \text{(II)}$$

in which R^3 is halogen, by first forming the cuprous acetylenyl derivative of a compound of formula I and then reacting said derivative with a compound of the formula II;

semi-hydrogenating the acetylenic bond of the compound of formula III to form a class of compounds having the general formula:

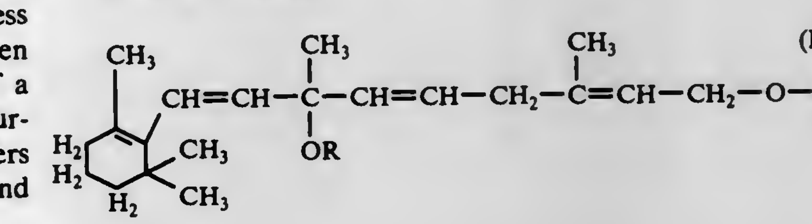

(IV)

in which R and R^1 have the same meaning as above; and

subjecting the compound of formula IV to the presence of a sufficiently strong basic medium to effect 1,4 elimination of ROH therefrom, formation of an additional double bond and conjugation of all five double bonds in the molecule in order to form Vitamin A.

4,064,184
NORBORNANOL DERIVATIVES

Kenneth K. Light, Long Branch; Manfred Hugo Vock, Locust, both of N.J.; Edward J. Shuster, Brooklyn, N.Y., and Frederick Louis Schmitt, Holmdel, N.J., assignors to International Flavors & Fragrances Inc., New York, N.Y.

Filed Nov. 11, 1976, Ser. No. 740,937
Int. Cl.[2] C07C 35/21
U.S. Cl. 260—617 R 6 Claims

1. The compound having the structure:

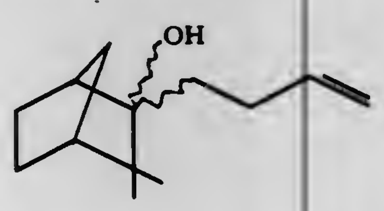

wherein the wavy lines are representative of "exo" or "endo" configurations.

4. The compound having the structure:

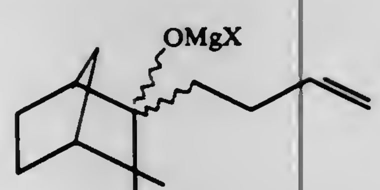

wherein each of the wavy lines represents an "exo" or "endo" configuration and X is selected from the group consisting of chlorine, bromine or iodine.

4,064,185
OLEFINICALLY UNSATURATED SUBSTITUENTS AT C-11 OF STEROID CYCLIZATION PRECURSORS

William S. Johnson, Portola Valley, and Grant E. Dubois, Menlo Park, both of Calif., assignors to The Board of Trustees of Leland Stanford Junior University, Stanford, Calif.

Filed Apr. 28, 1975, Ser. No. 572,378
Claims priority, application Canada, May 2, 1974, 198736
Int. Cl.[2] C07C 35/06
U.S. Cl. 260—617 R 2 Claims

1. A compound of the formula:

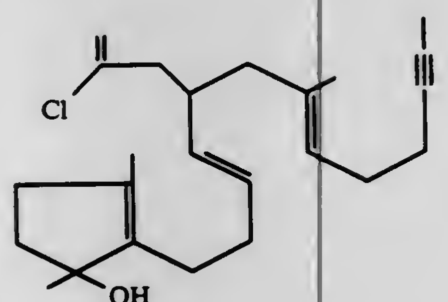

4,064,186
HYDROGENATION OF STYRENE OXIDE TO PRODUCE 2-PHENYLETHANOL

Charles Arnold Gibson, South Charleston, and Louis Foster Theiling, Jr., Charleston, both of W. Va., assignors to Union Carbide Corporation, New York, N.Y.

Filed Sept. 23, 1975, Ser. No. 616,024
Int. Cl.[2] C07C 29/04
U.S. Cl. 260—618 H 5 Claims

1. Process for producing 2-phenylethanol by reacting styrene oxide in the liquid phase with hydrogen in a closed reaction zone and in the presence of Raney nickel hydrogenation catalyst, which process comprises introducing styrene oxide into a reaction mixture comprising an organic liquid that is a solvent for styrene oxide and 2-phenylethanol and which is substantially unreactive with styrene oxide under the conditions of the process, and a catalytically effective quantity of Raney nickel hydrogenation catalyst, at a rate such that the proportion of unreacted styrene oxide in the reaction mixture does not exceed about 0.2 weight percent, based on weight of solvent plus contained 2-phenylethanol, the reaction mixture being maintained at a temperature and hydrogen pressure sufficient to effect reaction between said styrene oxide and hydrogen to produce 2-phenylethanol, said hydrogen pressure being at least about 250 p.s.i.g.

4,064,187
DEHYDROGENATION CATALYSTS

Frederick J. Soderquist, Essexville; Harold D. Boyce, Coleman, and William R. Butts, Essexville, all of Mich., assignors to The Dow Chemical Company, Midland, Mich.

Filed Aug. 30, 1976, Ser. No. 718,726
Int. Cl.[2] C07C 15/00, 15/10; B01J 23/94
U.S. Cl. 260—669 R 9 Claims

1. A self-regenerative catalyst composition for the steam dehydrogenation of lower alkyl aromatic hydrocarbons to the corresponding vinyl aromatic compounds consisting essentially of about 55–75 percent by weight of Fe_2O_3 and ZnO in a weight ratio of from about 0.8 to about 1.8 Fe_2O_3 to one of ZnO, about 8–12 percent of a sodium or potassium chromate, and a basic potassium promoter of the water gas reaction from the group consisting of K_2CO_3, K_2O and KOH, the improvement wherein said promoter constitutes about 18–35 percent of the total calculated as K_2CO_3.

6. In a method for dehydrogenating an alkylated aromatic hydrocarbon having from 1 to 2 six-membered rings, zero to 3 methyl groups and 1 to 2 alkyl groups of 2 to 3 carbon atoms each and a total of 8–18 carbon atoms in said hydrocarbon in the presnce of steam at 600°–700° C by passing a mixture of steam and the vaporized hydrocarbon over a self-regenerative catalyst, the improvement wherein the catalyst is that defined in claim 1.

4,064,188
METHOD OF DEHYDROGENATION, DEHYDROCYCLIZATION AND HYDRODEALKYLATION

Viktor Sergeevich Smirnov, Kutuzovsky prospekt, 26, kv. 555; Vladimir Mikhailovich Gryaznov, Leninskie Gory, MGU, Zona L, kv. 11; Valentina Ivanovna Lebedeva, Leninsky prospekt, 48a, kv. 29; Alexandr Petrovich Mischenko, Khersonskaya ulitsa, 7, korpus 4, kv. 115; Victoria Petrovna Polyakova, ulitsa Trofimova, 15, kv. 201, and Evgeny Mikhailovich Savitsky, ulitsa Dm.Ulyanova, DNR-3, kv. 13, all of Moscow, U.S.S.R.

Division of Ser. No. 578,659, May 19, 1975, which is a continuation of Ser. No. 434,224, Jan. 17, 1974, abandoned, which is a division of Ser. No. 271,186, July 12, 1972, Pat. No. 3,865,891, which is a division of Ser. No. 23,037, March 26, 1970, abandoned. This application Dec. 30, 1976, Ser. No. 755,598
Int. Cl.[2] C07C 3/58
U.S. Cl. 260—672 R 3 Claims

1. A method for the selective preparation of aromatic hydrocarbons by the hydrodealkylation of alkylaromatic hydrocarbons, which comprises the passing of a vaporized alkylaromatic hydrocabon feedstock at a temperature of 300° to 680° C over a catalyst in the form of a foil made of palladium alloyed with at least one member selected from the group consisting of rhenium, tungsten, and a combination of tungsten and ruthenium, the content of palladium in said alloy ranging from 60 to 99 weight percent.

4,064,189
PROCESS FOR REACTING PARAFFINIC HYDROCARBONS UTILIZING HYDROGEN, METAL PENTAFLUORIDE AND HYDROGEN HALIDE

Michael Siskin, Maplewood, and Joseph J. Porcelli, Scotch Plains, both of N.J., assignors to Exxon Research & Engineering Co., Linden, N.J.

Continuation-in-part of Ser. No. 586,176, June 12, 1975, Pat. No. 4,025,577. This application Jan. 3, 1977, Ser. No. 756,536
Int. Cl.[2] C07C 9/00
U.S. Cl. 260—676 R 17 Claims

1. A process wherein a paraffinic feedstock comprising C_3–C_6 paraffinic hydrocarbons is reacted with larger paraffinic hydrocarbons having more than 6 carbon atoms under substantially anhydrous reaction conditions in the presence of hydrogen and a catalyst comprising a metal pentafluoride selected from the group consisting of tantalum pentafluoride, niobium pentafluoride and mixtures thereof and a hydrogen halide, to form a product containing primarily C_4–C_6 paraffins and having an octane number greater than that of the said feedstock.

4,064,190
REMOVAL OF ACETYLENIC CONTAMINANTS BY COPPER-TIN AND/OR LEAD ZINC ALUMINATE

Alan D. Eastman, and Floyd Farha, Jr., both of Bartlesville, Okla., assignors to Phillips Petroleum Company, Bartlesville, Okla.

Filed Dec. 17, 1976, Ser. No. 751,499
Int. Cl.[2] C07C 7/00
U.S. Cl. 260—681.5 R 10 Claims

1. A process for the selective removal of acetylenic contaminants or impurities present in hydrocarbon streams which comprises contacting a hydrocarbon-containing mixture contaminated with acetylenic compounds with a catalyst consisting essentially of zinc aluminate promoted with copper and at least one of tin and lead in which the total concentration of promoter metals present, calculated as the metals, ranges from about 0.1 to about 20 weight percent based on the weight of zinc aluminate plus metal promoters under reaction conditions including an elevated temperature sufficient to selectively remove a substantial portion of said acetylenic compounds present in said mixture.

4,064,191
COATING COMPOSITION CONTAINING AN ALKYLATED GLYCOLURIL, A POLYMERIC NON-SELF-CROSSLINKING COMPOUND AND AN ACID CATALYST

Girish Girdhar Parekh, Stamford, Conn., assignor to American Cyanamid Company, Stamford, Conn.

Filed Mar. 10, 1976, Ser. No. 665,488
Int. Cl.[2] C08L 61/26, 67/02
U.S. Cl. 260—850 10 Claims

1. An organic solvent soluble composition comprising a blend of from about 2% to about 50% by weight of (A) a partially or fully alkylated glycoluril derivative having the following structural formula:

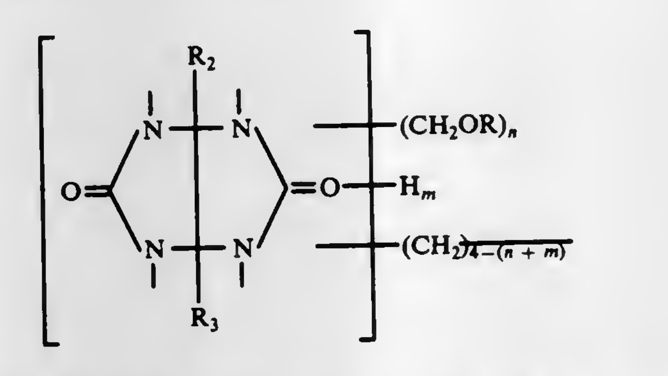

wherein n is a whole integer between 1 to 4 inclusive; m is a whole integer between 0 and 2 inclusive; each R is, individually, hydrogen or an alkyl radical containing from 1 to 6 carbon atoms, inclusive, wherein the said alkyl radicals may be the same or different alkyl radicals; R_2 and R_3 are separately hydrogen or an alkyl radical having from 1 to 6 carbon atoms inclusive or a phenyl radical and correspondingly from about 98% to about 50% by weight of (B) an organic solvent soluble, normally non-self-crosslinking polymeric material having as reactive groups, any one or more of carboxyl groups, alcoholic hydroxyl groups or amide groups wherein the amount of said groups is at least about 0.5% by weight, and not more than about 25%, by weight, based on the total weight of said polymeric material; and (C) from about 0.05% to 5.0% by weight of an acid catalyst based on the total weight of (A) and (B), wherein said reactive groups of (B) are heat reactive with (A) and wherein said percentages of (A) and (B), by weight, total 100% and are based on the total solids weight of (A) and (B).

4,064,192
HEAT-STABLE POLYIMIDE RESINS

Michel Bargain, Lyon, France, assignor to Rhone-Poulenc S.A., Paris, France

Division of Ser. No. 448,262, March 5, 1974, Pat. No. 3,970,714, which is a continuation-in-part of Ser. No. 228,232, Feb. 22, 1972. This application Mar. 25, 1976, Ser. No. 670,453
Claims priority, application France, Feb. 24, 1971, 71.06289
Int. Cl.[2] C08L 77/00; C08G 73/12
U.S. Cl. 260—857 UN 19 Claims

1. A heat-stable cured resin consisting essentially of a three-dimensional polyimide which is obtained by reacting at between about 50° C and 350° C at least one reactant from each of the following four groups:

i. a bis-imide of the general formula:

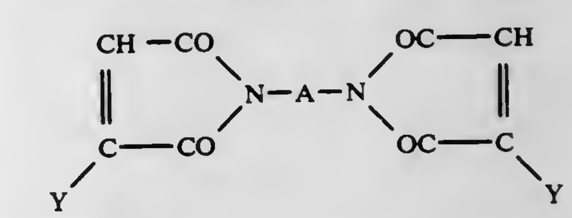

in which Y denotes H, CH_3 or Cl, and A represents a linear or branched alkylene radical having less than 13 carbon atoms, a phenylene or cyclohexylene radical or one of the radicals of formulae:

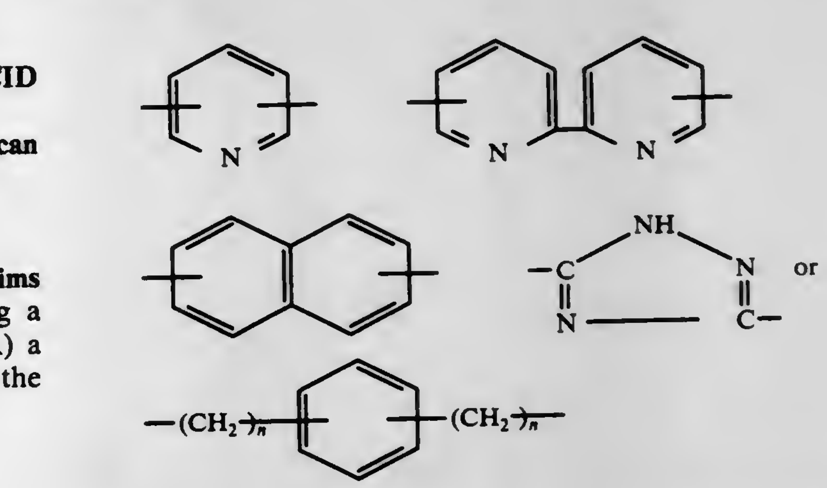

wherein n represents an integer from 1 to 3 or a divalent radical with 12 to 30 carbon atoms consisting of phenylene or cyclohexylene radicals bonded to one another by a simple valency bond or by —O—, —S—, an alkylene group with 1 to 3 carbon atoms, —CO—, —SO_2—, —NR_1—, —N=N—, —CONH—, —COO—, —P(O)R_1—, —CONH—X—NHCO—,

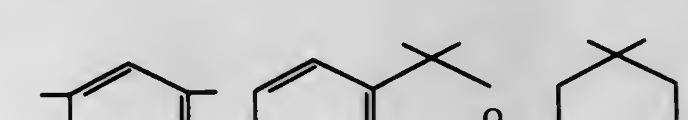

-continued

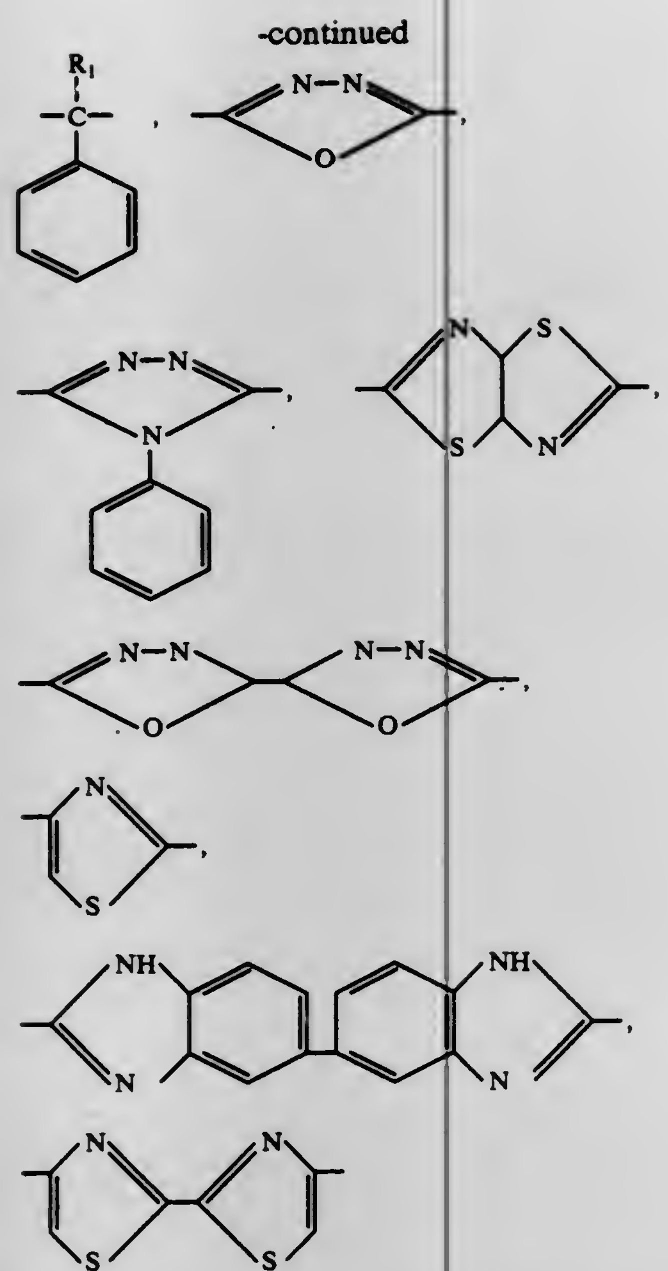

wherein R_1 represents a hydrogen atom, an alkyl radical with 1 to 4 carbon atoms or a phenyl or cyclohexyl radical and X represents an alkylene radical with less than 13 carbon atoms,

ii. a polyamine of the general formula:

$R(NH_2)_x$

in which x represents an integer from 2 to 4 denotes an organic radical of valency x and selected from the group consisting of a 3 to 5 valent benzene, methylbenzene, naphthalene, pyridine or triazine radical, a 3 to 5 valent radical consisting of phenylene radicals bonded to one another by a simple valency bond or by —O—, —S—, an alkylene group with 1 to 3 carbon atoms, —CO—, —SO_2—, NR_1—, —N=N—, —CONH—, —COO—, —P(O)R_1—, —CONH—X—NHCO—,

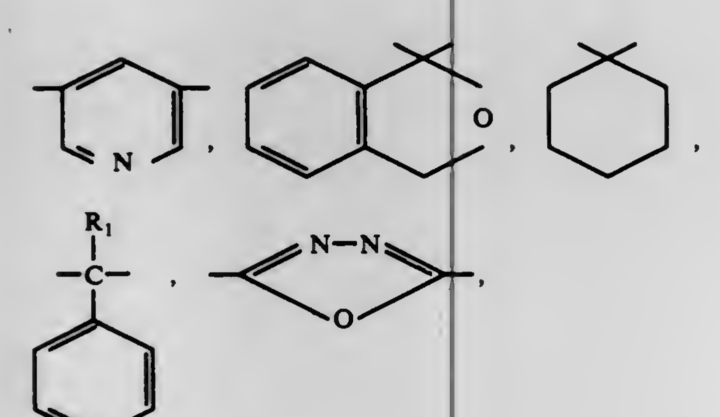

-continued

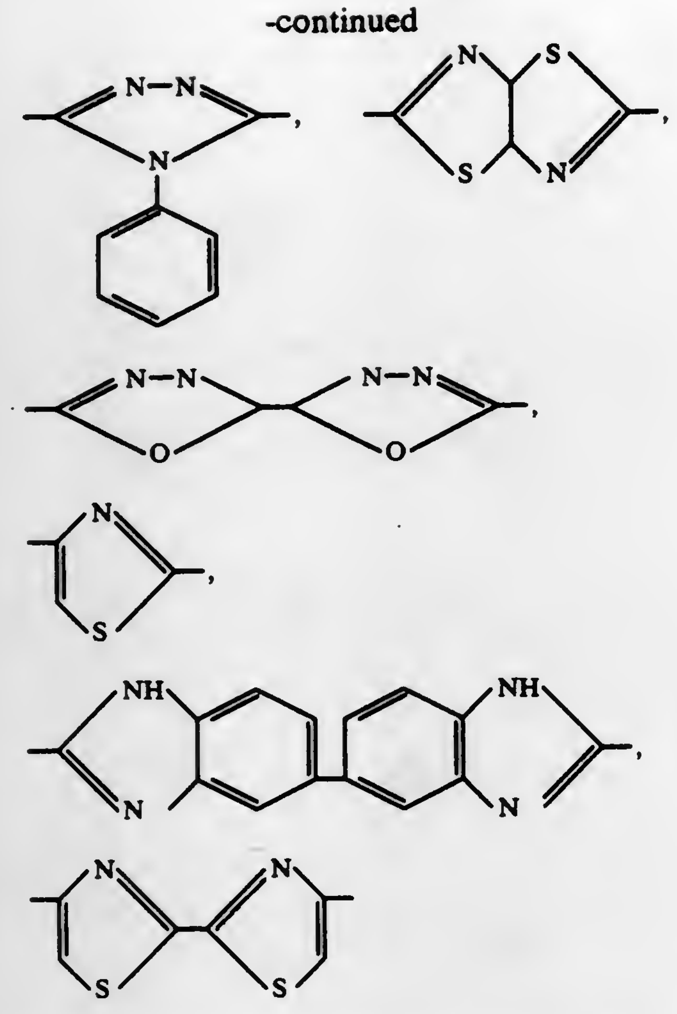

wherein R_1 represents a hydrogen atom, an alkyl radical with 1 to 4 carbon atoms or a phenyl or cyclohexyl radical and X represents an alkylene radical with less than 13 carbon atoms

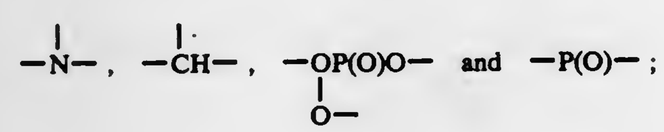

a linear or branched alkylene radical having less than 13 carbon atoms, a phenylene or cyclohexylene radical or one of the radicals of the formulae:

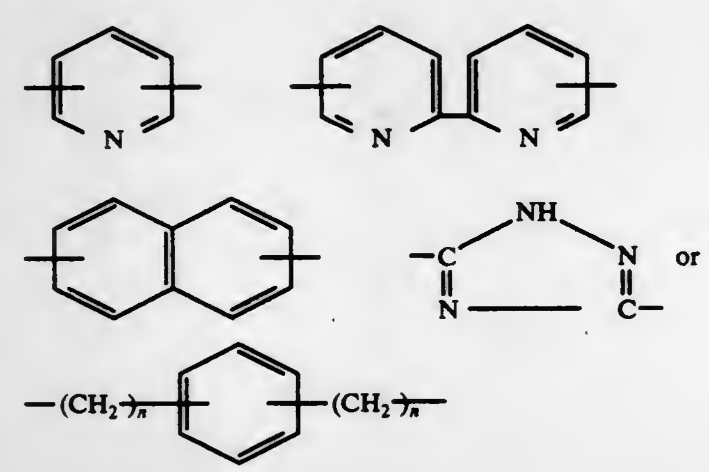

wherein n represents an integer from 1 to 3 or a divalent radical with 12 to 30 carbon atoms consisting of phenylene or cyclohexylene radicals bonded to one another by a simple valency bond or by —O—, —S—, an alkylene group with 1 to 3 carbon atoms, —CO—, —SO_2—, —NR_1—, —N=N—, —CONH—, —COO—, —P(O)R_1—, —CONH—X—NHCO—,

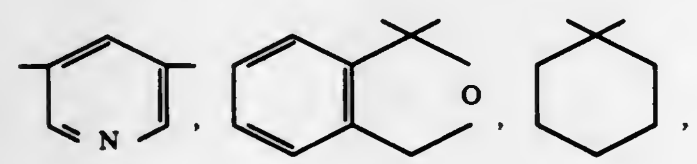

-continued

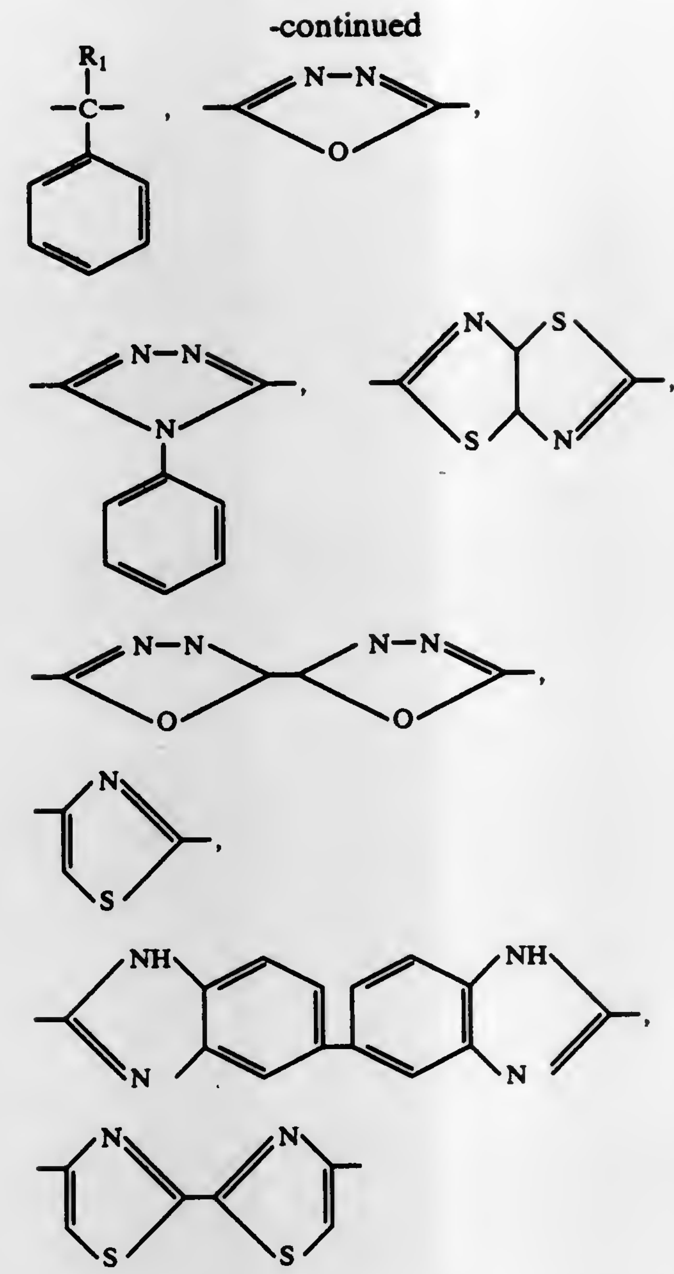

wherein R_1 represents a hydrogen atom, an alkyl radical with 1 to 4 carbon atoms or a phenyl or cyclohexyl radical;

iii. an alazine of the general formula:

G — CH = N— N= CH — G

in which G represents a monovalent carbocyclic aromatic radical, and

iv. a polymerisable monomer other than a bis-imide, containing at least one polymerisable vinyl, maleic, allyl or acrylic —CH = C< group, in an amount from 5 to 50% by weight based on the total weight of the reactants (i), (ii) and (iii) in such amounts that if N_1 represents the number of mols of bis-imide employed, N_2 represents the number of mols of polyamine employed and N_3 represents the number of mols of alazine employed, the ratio

$$\frac{N_1}{\frac{2N_2}{x}+N_3}$$

is from 1.5 to 10, x being defined as above.

7. The resin according to claim 1 in which is obtained by preparing a shapable, heat-curable prepolymer by heating between about 50° C. and 180° C. a mixture of the bis-imide, polyamine and alazine in bulk until a homogenous liquid is obtained, or in a polar solvent, adding the polymerisable monomer and then curing the prepolymer by subsequent heating at between about 150° C. and 300° C.

4,064,193

HEAT-RESISTANT POLYMERS BASED ON POLYAMINES AND OLIGOMERS POSSESSING IMIDE GROUPS WITH UNSATURATED POLYESTER

Michel Bargain, Lyon, France, assignor to Rhone-Poulenc S.A., Paris, France

Continuation-in-part of Ser. No. 264,723, June 21, 1972, Pat. No. 3,883,486. This application Feb. 18, 1975, Ser. No. 550,740
Claims priority, application France, June 24, 1971, 71.23065
Int. Cl.[2] **C08L 77/06**
U.S. Cl. 260—857 PE 16 Claims

1. A heat-resistant or heat-curable polymer consisting essentially of a polymeric composition obtained by reacting, between 50° C. and 350° C.,

a. an oligomer having the average general formula:

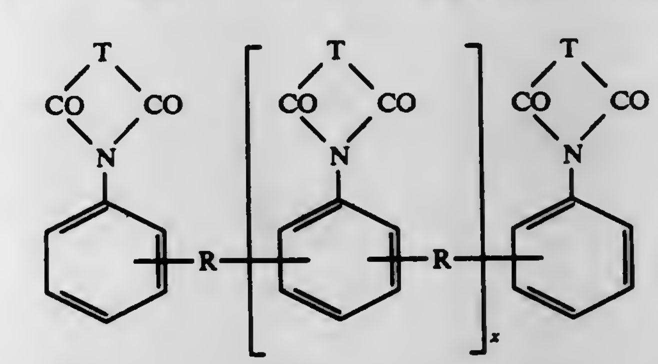
(I)

in which x represents a number from 0.1 to about 2, R represents a divalent hydrocarbon radical with 1 to 8 carbon atoms, which is derived from an aldehyde or ketone of the general formula:

O = R (II)

in which the oxygen atom is bonded to a carbon atom of the radical R, and T represents a divalent organic radical possessing 2 to 24 carbon atoms, the free valencies of which are on adjacent carbon atoms and which is derived from an internal anhydride of the general formula:

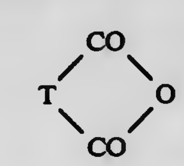
(III)

at least 60% of the T radicals in the oligomer containing a polymerizable carbon-carbon double bond optionally substituted by chlorine atoms or methyl groups, any remaining T radicals being alkylene, cycloalkylene, phenylene or naphthylene radicals, with (b) a polyamine of the general formula:

$Q(NH_2)_y$

in which y represents an integer at least equal to 2 and Q represents a divalent organic radical E selected from the group consisting of a linear or branched alkylene radical with less than 13 carbon atoms, a phenylene radical, a cyclohexylene radical, a methyl-substituted phenylene or cyclohexylene radical, radicals of the formulae:

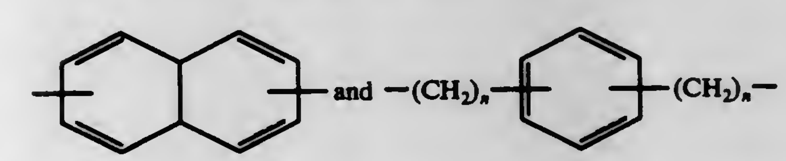

wherein n represents an integer from 1 to 3, a radical consisting of a plurality of phenylene, methyl-substituted phenylene, cyclohexylene or methyl-substituted cyclohexylene radicals connected to one another by a simple valency bnd or by an intert atom or —O—, —S—, an alkylene group with 1 to 3 carbon atoms, —CO—, —

SO_2—, —CONH—, —COO—, —$P(O)R_1$—, —CON-H—X—NHCO—,

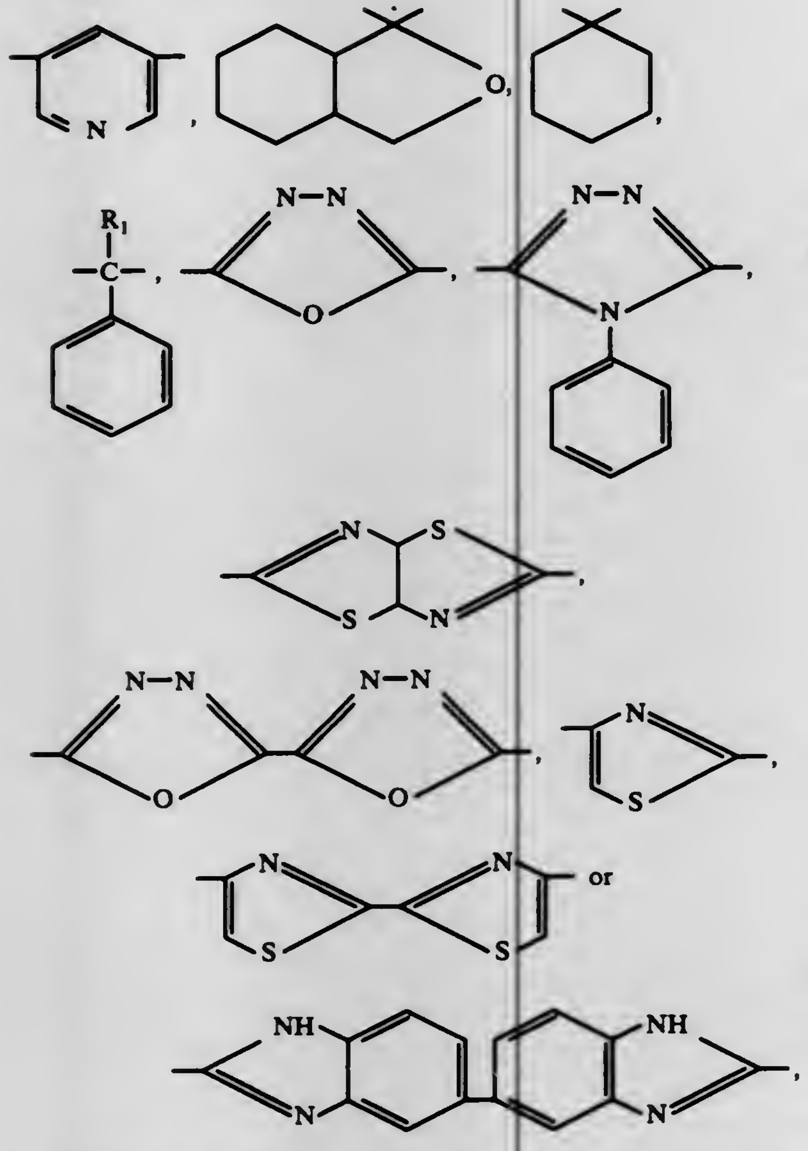

wherein R_1 represents a hydrogen atom, an alkyl radical with 1 to 4 carbon atoms, a phenyl radical or a cyclohexyl radical, and X represents an alkylene radical with less than 13 carbon atoms, and a 2- to 4-valent radical of the formula:

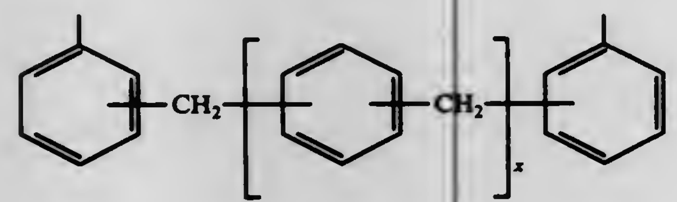

in which *x* represents a number from 0.1 to 2, the relative amounts being such that the oligomer supplies 1.1 to 50 T radicals containing a polymerizable carbon-carbon double bond per —NH_2 group supplied by the polyamine and (c) an unsaturated polyester prepared by the polycondensation of a polycarboxylic derivative selected from the group consisting of a polycarboxylic acid, anhydride, ester and acid chloride and a polyol at least one of the said polycarboxylic derivative and polyol containing olefinic unsaturation.

4,064,194
HIGH SOLIDS URETHANE COATINGS
James M. Evans, Olmsted Falls, and Donald R. Stevenson, Brunswick, both of Ohio, assignors to SCM Corporation, New York, N.Y.
Filed May 28, 1976, Ser. No. 691,134
Int. Cl.² C08G *18/04*
U.S. Cl. 260—859 R **15 Claims**

1. A two-package, urethane-forming coating composition formulated by combining said two packages, an applied film of said coating composition being curable upon heating to form a heat-cured urethane film, which comprises:

said first package comprising a hydroxyl-bearing polymer having ethylenic unsaturation and having a molecular weight not substantially greater than about 3,000, and said polymer being dispersed in fugitive organic solvent; and

said second package comprising a multi-isocyanate compound having a multiplicity of isocyanate groups and being dispersed in fugitive organic solvent,

the total proportion of said fugitive solvents in both said packages being not substantially greater than about 30% by volume of said coating composition, said applied film of said coating composition curable upon heating by in situ formation of urethane linkages by the hydroxyl-isocyanate reaction in combination with in situ free-radical addition polymerization through said ethylenic unsaturation of said polymer.

4,064,195
MODIFIED AROMATIC POLYCARBONATES
Arthur L. Baron, and Parameswar Sivaramakrishnan, both of New Martinsville, W. Va., assignors to Mobay Chemical Corporation, Pittsburgh, Pa.
Continuation-in-part of Ser. No. 580,375, May 22, 1975, abandoned. This application June 9, 1976, Ser. No. 694,401
Int. Cl.² C08L *67/00*
U.S. Cl. 260—860 **3 Claims**

1. Resin mixtures consisting essentially of high molecular weight, thermoplastic polycarbonate based on dihydric phenols, and between about 0.1 and about 0.95 weight percent, referred to the total weight of polycarbonate and polycaprolactone of a polycaprolactone polymer having the repeating units given by the formula

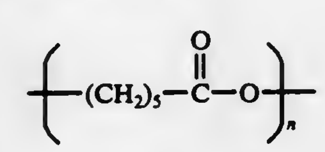

wherein *n* is greater than 100 and less than 3000.

4,064,196
FLAME-RETARDANT RESIN COMPOSITIONS
Kenichi Hazama, Joyo; Isamu Hirose; Kenji Yasue, both of Kyoto, and Daisuke Shinoura, Takatsuku all of Japan, assignors to Unitika Ltd., Amagasaki, Japan
Filed Feb. 19, 1976, Ser. No. 659,190
Claims priority, application Japan, Feb. 19, 1975, 50-20749
Int. Cl.² C08L *67/02, 67/08*
U.S. Cl. 260—860 **11 Claims**

1. A flame-retardant aromatic co-polyester composition comprising (A) a halogen-free aromatic co-polyester obtained by the condensation reaction of (a) 2,2-bis(4'-hydroxyphenyl)-propane and (b) a mixture of isophthalic acid and/or its functional derivatives and terephthalic acid and/or its functional derivatives, and (B) a halogen-containing aromatic co-polyester obtained by the condensation reaction of (a) 2,2-bis(4'hydroxy-3', 5'-dibromophenyl)propane and/or 2,2-bis(4'-hydroxy-3', 5'-dichlorophenyl)propane and (b) a mixture of isophthalic acid and/or its functional derivatives and terephthalic acid and/or its functional derivatives.

4,064,197
VINYL HALIDE POLYMER IMPACT MODIFIERS
Robert M. Myers, Philadelphia; David L. Dunkelberger, Levittown, both of Pa., and Daniel T. Carty, Willingboro, N.J., assignors to Rohm and Haas Company, Philadelphia, Pa.
Division of Ser. No. 494,810, Aug. 5, 1974, Pat. No. 3,971,835, which is a continuation of Ser. No. 184,913, Sept. 29, 1971, abandoned, which is a continuation-in-part of Ser. No. 56,007, July 17, 1970, abandoned. This application Jan. 19, 1976, Ser. No. 650,479
Int. Cl.² C08L *51/00*
U.S. Cl. 260—876 R **9 Claims**

1. A modified composition of vinyl halide polymer comprising about 60 to 98 weight percent poly(vinyl halide) and about 2 to 40 weight percent of the three stage, sequentially produced graft polymer comprising

A. 5 to 50 parts by weight of a non-rubbery, hard stagepolymer formed by polymerization of a monomer charge of 50 to 100 weight percent of a vinylaromatic compound, and 0.1 to 10 weight percent of a polyfunctional crosslinking monomer based on the weight of the monomer charge;

B. 20 to 70 parts by weight of a second stage rubbery polymer (A) formed by sequentially polymerizing in the presence of the hard polymer stage (A), a second monomer of 50 to 100 weight percent of butadiene, isoprene, chloroprene, mixtures thereof.

C. 15 to 40 parts by weight of a third stage polymer formed by sequentially polymerizing in the presence of the Stage (A) and Stage (B) polymer product, a monomer charge of 50 to 100 weight percent of an alkyl methacrylate wherein the alkyl group has about 1 to 4 carbon atoms.

4,064,198
PROCESS FOR THE MANUFACTURE OF SHAPED ARTICLES BY GRAFT POLYMERIZATION
Gerhard Zeitler, Hessheim; Lothar Hoehr, Worms, and Heinz Mueller-Tamm, Ludwigshafen, all of Germany, assignors to BASF Aktiengesellschaft, Ludwigshafen (Rhine), Germany
Continuation of Ser. No. 497,328, Aug. 14, 1974, abandoned. This application Apr. 21, 1976, Ser. No. 679,021
Claims priority, application Germany, Aug. 17, 1973, 2341556
Int. Cl.² C08F *263/04, 265/04*
U.S. Cl. 260—878 R **2 Claims**

1. A process for the manufacture of granules of a mixture of polystyrene and an ethylene/vinyl ester, ethylene/acrylate or ethylene/methacrylate styrene graft copolymer which comprises: swelling granules of said ethylene copolymers with styrene and polymerizing the styrene at elevated temperatures, wherein copolymer granules with a particle diameter of from 2 to 6 mm, having a comonomer content of from 3 to 40% by weight and a melt index of from 0.1 to 50 g/10 min are used, and from 100 to 400 parts by weight of styrene are used for every 100 parts by weight of said copolymer, swelling of said copolymer by styrene being carried out at a temperature of from 20° to 60° C over a period of from 1 to 6 hours in aqueous suspension, and polymerization being carried out at temperatures between 60° and 110° C in the presence of free-radical polymerization initiators.

4,064,199
CURABLE COATING COMPOSITIONS
Shigeki Nishikawa, Tokyo, Japan, assignor to Nippon Oil Company Ltd., Tokyo, Japan
Continuation-in-part of Ser. No. 441,461, Feb. 11, 1974. This application Sept. 12, 1975, Ser. No. 613,002
Claims priority, application Japan, Feb. 16, 1973, 48-18325
Int. Cl.² C08F *8/14, 265/06, 277/00*
U.S. Cl. 260—879 **6 Claims**

1. A coating composition useful as a vehicle for printing inks and curable by the application of heat or radiation thereto, comprising an acid-esterified resin prepared by reacting a dicyclopentadieneallyl alcohol copolymer with a member selected from the group consisting of acrylic and methacrylic acids in amounts of 0.2 - 1.2 mols of the acid per hydroxyl group contained in the copolymer.

4,064,200
PROCESS FOR THE PREPARATION OF O,O-DIALKYL-S-BENZYL THIOPHOSPHATES
Zenichi Sato, Shimizu; Fumio Shimizu, Shizuoka; Shoji Kusano, Shizuoka; Keiichiro Takagi, Shizuoka, and Yoji Imamiya, Shizuoka, all of Japan, assignors to Ihara Chemical Kogyo Kabushiki Kaisha, Tokyo, Japan
Filed Jan. 13, 1976, Ser. No. 648,756
Claims priority, application Japan, Jan. 17, 1975, 50-0350
Int. Cl.² C07F *9/165*
U.S. Cl. 260—979 **10 Claims**

1. A process for the preparation of O,O-dialkyl-S-benzyl thiophosphates of the general formula:

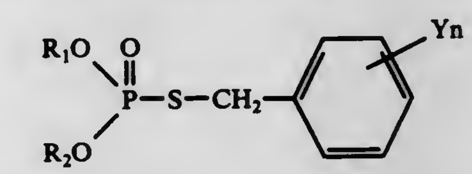

where in R_1 and R_2 each stand for an alkyl group with 1–5 carbon atoms and Y for halogen, an alkyl with 1–4 carbon atoms, and alkoxyl with 1–4 carbon atoms or a nitro group, and *n* for zero or an integer of 1–4, with the proviso that when *n* is an integer of 2–4, Y may be the same or different, characterized by reacting (a) a diester of phosphorous acid of the general formula:

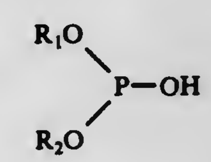

wherein R_1 and R_2 have the same meanings as given above, in an organic solvent which is sparingly soluble or insoluble in water with (b) sulfur and (c) at least one compound selected from the group consisting of hydroxides and oxides of alkali and alkaline earth metals, and then reacting an aqueous extract of the resulting reaction product with a benzyl halide of the general formula:

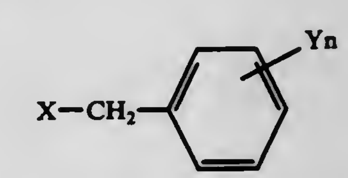

wherein X stands for halogen and Y and *n* have the same meanings given above.

4,064,201
ACCELERATING PUMP ACTUATING DEVICE FOR A CABURETOR
Tsugio Sanka, Wako, and Toshimasa Shishido, Tokyo, both of Japan, assignors to Honda Giken Kogyo Kabushiki Kaisha, Tokyo, Japan
Filed Aug. 12, 1976, Ser. No. 713,968
Claims priority, application Japan, Aug. 18, 1975, 50-113020[U]
Int. Cl.² F02M *7/08*
U.S. Cl. 261—34 A **2 Claims**

1. In a carburetor of the type including an acceleration fuel spray nozzle opening into an intake air passage and an accelerating pump operable to discharge fuel to the acceleration fuel spray nozzle in response to the throttle opening operation of a throttle valve associated therewith, an accelerating pump actuating device comprising a two-armed pump-actuating lever pivotally supported on the carburetor and having one arm operatively connected with the displacement member of

the accelerating pump, a rotatable cam member operatively coupled in rotation with a rotatable shaft of the throttle valve for therewith, said cam member being in camming engagement with the other arm of said pumpactuating lever so as to impart a discharge stroke to the accelerating pump as the throttle valve is turned open, said cam member being mounted on the carburetor for rotation in opposite directions under the pull of

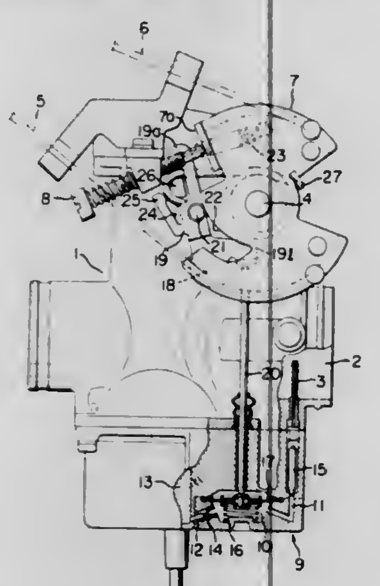

throttle-opening and closing wires and having a contoured edge portion for camming engagement with said other arm of said pump-actuating lever, a roller cam follower element mounted on said other arm of said pump-actuating lever for contacting engagement with said contoured edge portion of said cam member and means resiliently connecting said cam member and said two-armed lever for common pivotal movement.

4,064,202
METHOD OF ADJUSTING ROD TYPE SCRUBBER
Charles Stephen Parenchuck, South Windsor, Conn., assignor to Combustion Engineering, Inc., Windsor, Conn.
Filed Dec. 19, 1975, Ser. No. 642,277
Int. Cl.² B01F *3/04*
U.S. Cl. 261—44 R **3 Claims**

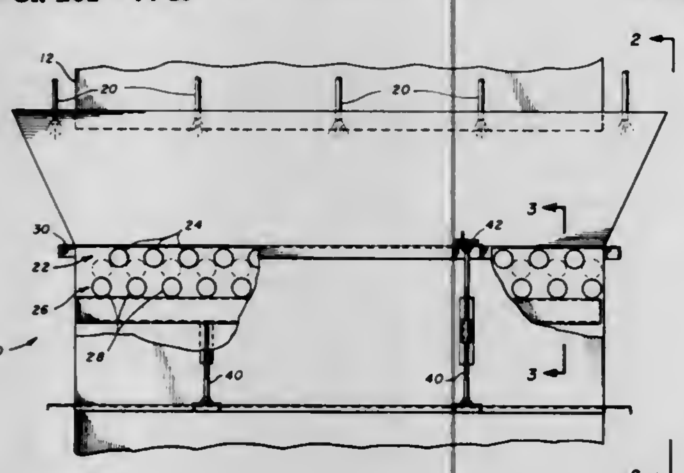

1. In a rod type scrubber having a pair of spaced trays of parallel spaced rods extending transverse to the liquid and gas flow paths with the rods of one tray being alternately disposed with respect to the rods of the other tray and with there being means to adjust the trays with respect to each other, the spacing between the rods of one tray being less than the diameter of the rods of the other tray, the method of positioning the rods of one tray with respect to those of the other tray comprising mounting the rods of at least one tray in a manner to permit relative lateral movement therebetween, bringing the two trays together while in parallel planes such that the rods of the two trays are interspersed and in engagement with adjacent rods being in engagement generally throughout their length, and thereafter securing the rods in their then respective positions to prevent lateral movement therebetween within the tray when the rods are are moved out of engagement.

4,064,203
AIR-CIRCULATING DEVICE WITH AIR FRESHENER, HUMIDIFIER, AND/OR DEODORIZER
Dale W. Cox, Hermosa Beach, Calif., assignor to Western Magnum Corporation, Hermosa Beach, Calif.
Filed Sept. 16, 1976, Ser. No. 724,020
Int. Cl.² F24F *3/14, 7/06*
U.S. Cl. 261—99 **4 Claims**

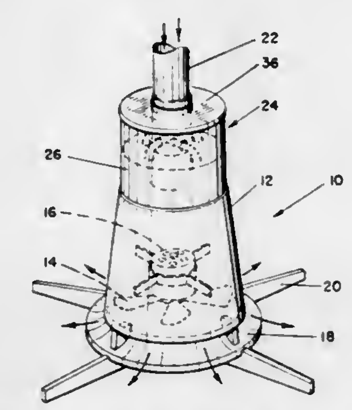

1. A portable air-circulating and humidifying device comprising:
a fan housing, a fan blade and a fan motor associated with said fan housing to draw air through said housing;
walls defining an outlet space below said fan housing for delivering air from said fan housing back into said from below said air inlet to circulate air in the room and reduce stratification;
a wick and a liquid reservoir, said reservoir being positioned on top of said fan housing and having an inner tubular air passage therethrough,
an inlet tube detachably mounted on top of said reservoir and in communication with said air passage therethrough, said inlet tube serving as an air inlet passage to said reservoir and said housing, said air inlet tube extending upward from said housing to an elevated position for withdrawing air from above said fan housing, said inner tubular air passage through said reservoir extending between said inlet tube and said fan housing, said wick extending into said air passage within said reservoir.

4,064,204
MANUFACTURE OF NUCLEAR FUEL COMPACTS
David F. Leary, San Diego; Roy G. Cooper, Rancho Santa Fe, and Gary N. Miertschin, San Diego, all of Calif., assignors to General Atomic Company, San Diego, Calif.
Filed Sept. 30, 1974, Ser. No. 510,390
Int. Cl.² G21C *21/02*
U.S. Cl. 264—.5 **10 Claims**

1. A method for making nuclear fuel rods comprising forming a matrix comprising graphite flour, pitch a viscosity reducing additive additive, combining said matrix with nuclear fuel particles to provide a molding mixture, placing said molding mixture in a mold and compressing said molding mixture while heating said molding mixture to a temperature of from about 100° C to about 300° C, to form a nuclear fuel rod, said additive being selected from the group consisting of saturated and unsaturated alcohols having a carbon chain length of from 12 to 20, saturated and unsaturated fatty acids having a carbon chain length of from 12 to 20, saturated and unsaturated primary amines derived from fatty acids having a carbon chain length of from 12 to 20 and saturated hydrocarbons derived from petroleum having a molecular weight in the range of from about 350 to about 1400, said additive being present at a level of from about 2 to about 12 percent by weight of said matrix, said graphite flour being present at a level of from about 25 to about 45 percent by weight of said matrix, and said

pitch being present at a level of from about 43 to about 73 percent by weight of said matrix.

4,064,205
METHOD FOR MAKING A PRINTING PLATE FROM A POROUS SUBSTRATE
Robert M. Landsman, Norwalk, Conn., assignor to LogEtronics, Inc., Springfield, Va.
Filed July 2, 1974, Ser. No. 485,178
Int. Cl.² B29C *17/00*
U.S. Cl. 264—25 **4 Claims**

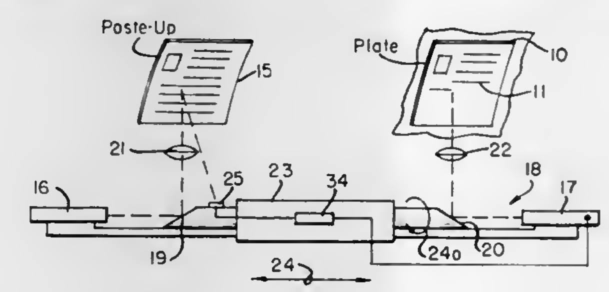

1. The method of making a printing plate, from a thermoplastic plate having an open-cell structure which is poor absorber of infra-red energy, comprising
bringing an infra-red absorbing coating, which includes carbon and nitrocellulose that is on a transparent cover sheet, into intimate contact with said plate,
scanning the cover sheet with a laser beam, and modulating the beam, to effect transfer of said coating to the areas of the surface of the plate in which relief is desired, thereby making such areas relatively good absorbers of infra-red energy,
removing said cover sheet, including the untransferred coating,
heating said plate to a temperature just below the temperature at which structural collapse begins beneath the coated areas, to thereby reduce the infra-red exposure required to effect said collapse in a subsequent treatment step and to improve the fidelity of said plate by decreasing heat conduction to its uncoated areas during said subsequent treatment step, and
thereafter applying infra-red energy to the plate to heat the surface to effect a change in the plate due to collapse of the structure under the coated areas of the plate without corresponding collapse of structure under the uncoated areas of the plate, thus providing the plate with printing areas and relieved non-printing areas,
said step of applying infra-red energy comprising a first and infra-red heating treatment to selectively collapse and seal the areas where relief is desired, and a second infra-red heating treatment characterized by the simultaneous passage of a cooling fluid through the unsealed cells of the plate to enhance the temperature differential between the sealed and unsealed portions of the plate.

4,064,206
PROCESS FOR FORMING FLEXIBLE FOLD LINES IN THERMOPLASTIC SHEETS
Gerhard Seufert, Otto-Hahn-Strasse 3, 6051 Hainhausen, Germany
Filed Jan. 28, 1976, Ser. No. 653,053
Claims priority, application Germany, Sept. 17, 1975, 2541324
Int. Cl.² B29C *15/00*
U.S. Cl. 264—26 **7 Claims**

1. A process for forming a container having flexible fold lines comprising:
a. providing thermoplastic sheets suitable for use as container blanks,
b. providing at least one forming tool and a substantially flat surface,
c. placing the thermoplastic sheet between the forming tool and the flat surface,
d. maintaining the temperature of the forming tool at a point between the softening temperature and the melting temperature of the thermoplastic sheet,
e. creating a high frequency electric field between the forming tool and the flat surface to heat the thermoplastic sheet

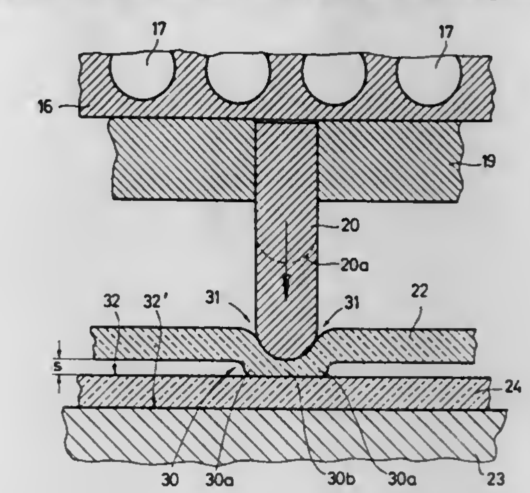

therebetween while pressing the forming tool into the sheet to a depth of at least 25% of the thickness of the sheet and forming bulges in the sheet adjacent to opposite sides of the tool,
f. allowing the sheet to cool while maintaining the same in a substantially flat condition, and
g. thereafter forming a flat folded container from the sheet.

4,064,207
FIBRILLAR CARBON FUEL CELL ELECTRODE SUBSTRATES AND METHOD OF MANUFACTURE
Michael A. DeCrescente, Wethersfield; George K. Layden, East Hartford, and Roscoe A. Pike, Simsbury, all of Conn., assignors to United Technologies Corporation, Hartford, Conn.
Filed Feb. 2, 1976, Ser. No. 654,226
Int. Cl.² D01F *9/22*
U.S. Cl. 264—29.6 **7 Claims**

1. A process for the manufacture of carbon substrate material having a fibrillar microstructure and a porosity in the range of 70–90% comprising the steps of:
selecting an acrylic polymer filament having a diameter commensurate with the desired porosity of the substrate material, said filament containing at least 50% acrylonitrile;
stabilizing a plurality of the selected acrylic polymer filaments by heating the filaments in an oxidizing atmosphere until between 3% and 15% by weight oxygen is introduced into the polymer;
reducing the stabilized filaments to fibers having a preselected average length;
felting the fibers of preselected average length to produce a layer of uniform thickness with random fiber orientation;
impregnating the felted fibers with a resinous binder to define a sheet material, the binder comprising 12–25% by weight of the sheet material;
subjecting the sheet material including the stabilized acrylic

polymer fibers to an elevated temperature to cure the resinous binder; and

subjecting the sheet material to a temperature in the range of 1000° C to 1260° C in a non-oxidizing atmosphere subsequent to curing the binder to pyrolyze the fibers and binder and thereby produce a porous carbon substrate material.

4,064,208

MOLDING METHOD WITH AUTOMATIC FLUID TREATMENT OF MOLD CAVITY

Michael Hanning, Oerlinghausen, Germany, assignor to Hanning-Elektro-Werke Robert Hanning, Bielefeld, Germany

Division of Ser. No. 568,735, April 16, 1975, Pat. No. 4,009,978. This application May 17, 1976, Ser. No. 687,340

Claims priority, application Germany, Apr. 18, 1974, 2418658

Int. Cl.[2] B29F *1/14;* **B29C** *1/04*

U.S. Cl. 264—39 **2 Claims**

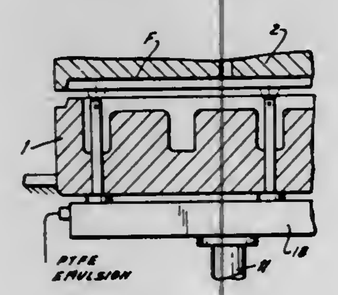

1. A method of molding a synthetic-resin article in a mold cavity defined between a pair of separable mold parts one of which is provided with ejector rods and which is connectable to a source of flowable synthetic-resin material, said method comprising the steps of:

a. retracting the ejector rods from said mold cavity so that ends of said rods lie flush with a wall of said cavity in said one of said mold parts;

b. injecting synthetic resin into said cavity while said mold parts are closed to form a synthetic-resin article having the shape of said mold cavity;

c. separating said mold parts to permit discharge of said article therebetween;

d. advancing said rods in said one of said mold parts toward the other of said mold parts whereby said ends of said rods eject said article;

e. holding said ends of said ejector rods in spaced relation from walls of both of said mold parts adapted to form said cavity in a closed condition of the mold formed by said mold parts;

f. spraying a mold-wall-treating release liquid from said ends of said ejector rods onto said walls of said mold parts by forcing said liquid through said ejector rods; and

g. repeating steps (a) to (f) for the molding of successive articles.

4,064,209

METHOD OF CONNECTING AN ALKALINE BETA ALUMINA PART TO AN ALPHA ALUMINA PART

Gérard Desplanches, Villejust; Yvon Lazennec, Saint Michel sur Orge, and Jacques Leboucq, Sainte Genevieve des Bois, all of France, assignors to Compagnie Generale d'Electricite S.A., Paris Cedex, France

Filed July 1, 1976, Ser. No. 701,931

Claims priority, application France, July 25, 1975, 75.23315

Int. Cl.[2] C03C *27/00*

U.S. Cl. 264—61 **9 Claims**

1. A method of connecting an alkaline beta alumina part to an alpha alumina part, comprising the steps of:

disposing said alpha alumina part within a pulverulent mass of an alkaline metal compound;

heating said alpha alumina part while disposed in said mass to a temperature of between 1400° C and 1600° C for 10 to 20 hours;

cooling said alpha part freely to ambient temperature;

forming a blank of said alkaline beta alumina part;

disposing said alpha and beta parts in contact with each other in a sintering enclosure;

heating said sintering enclosure to a temperature of between 1600° C and 1700° C for 30 minutes to 40 hours so as to sinter the alkaline beta alumina part and effect a connection thereof to the alpha alumina part;

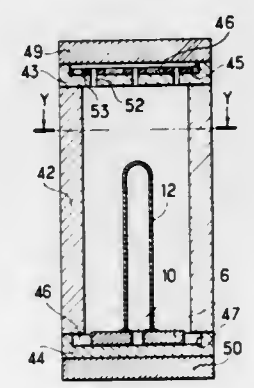

establishing during such heating, at least in the immediate vicinity of the parts to be joined, an atmosphere rich in alkaline metal during sintering operation; the alkaline metal ion of the alkaline metal compound and consequently the alkaline metal atmosphere being the same as the alkaline metal of the beta part; and

cooling the enclosure contents freely to ambient temperature.

4,064,210

METHOD FOR FEEDING AND DISCHARGING BLOW MOLDS

Robert C. Kellogg, Hartland, Mich., assignor to Monsanto Company, St. Louis, Mo.

Division of Ser. No. 669,303, March 22, 1976, Pat. No. 3,999,927. This application July 21, 1976, Ser. No. 707,470

Int. Cl.[2] B29C *17/07*

U.S. Cl. 264—94 **1 Claim**

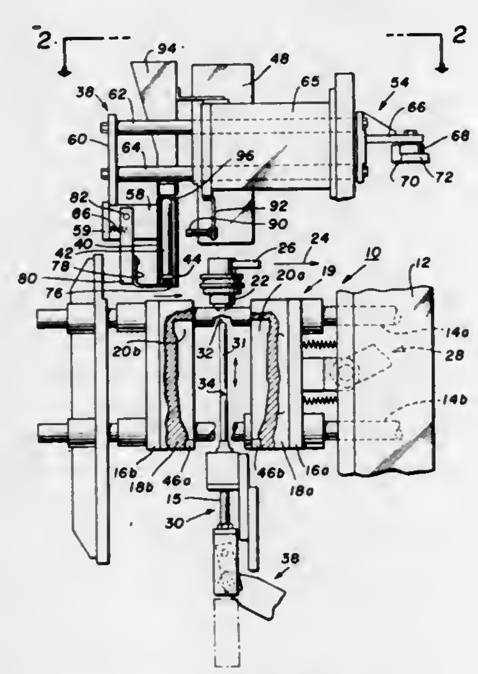

1. A method of feeding and discharging a blow mold comprising:

A. charging a preform from an upstream station to a carrier adjacent to and moving with a blow mold while a prior preform is being molded therein;

B. opening the mold and forcibly discharging the article upwardly along the mold axis through a guide chute fixed with respect to the mold axis;

C. transferring the carrier laterally to a mold loading position within the guide chute; and

D. removing an obstruction at the base of the carrier during such transfer movement to permit the preform to exit the carrier into the mold.

4,064,211

LINING OF PASSAGEWAYS

Eric Wood, Ossett, England, assignor to Insituform (Pipes & Structures) Ltd., Horbury Junction, near Wakefield, United Kingdom

Continuation-in-part of Ser. No. 611,670, Sept. 9, 1975, abandoned, which is a continuation of Ser. No. 422,694, Dec. 7, 1973, abandoned. This application Nov. 5, 1975, Ser. No. 628,850

Claims priority, application United Kingdom, Sept. 25, 1973, 56774/73

Int. Cl.[2] B29C *17/00*

U.S. Cl. 264—95 **3 Claims**

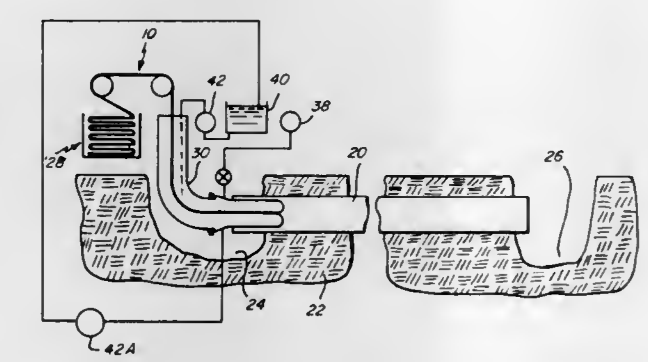

3. A method of lining an underground passageway with a rigid protective lining by inserting into the passageway from one end thereof a fluid impermeable evertible tubular membrane having encased therein an evertible tubular lining of resin absorbent material impregnated with a polymerizable synthetic resin, the method comprising the steps of

1. anchoring the evertible tubular membrane and the evertible lining at one end of the passageway in a manner permitting the uneverted tubular membrane with its encased lining to pass into the passageway through the anchored end of the fluid impermeable tubular membrane whereby the tube and the lining evert as they progress into the passageway,

2. continuously feeding the inverted tubular membrane and encased lining from ground level to said one end of the passageway to enable the tubular membrane and encased lining progressively to evert into and along the passageway by supplying liquid from ground level to fill the everted tubular membrane and to surround the uneverted portion of the tubular membrane extending from ground level to said one end of the passageway whereby the liquid forces the tubular membrane and encased lining to move along and evert in the passageway thereby lining same, the specific gravity of the liquid being chosen in relation to the weight of the uneverted tubular membrane and the impregnated lining so that the uneverted tubular membrane and the encased impregnated lining are supported in a buoyant position submerged in the liquid as they pass along the passageway.

4,064,212

METHOD OF MAKING PELLETS USABLE AS AGGREGATE OR FILLER

Ulrich Kleeberg, Muhlheim (Ruhr); Jürgen Leimkühler, Essen; Jürgen Knospe, Herbern, and Manfred Stohr, Essen, all of Germany, assignors to STEAG Aktiengesellschaft, Essen, Germany

Filed July 7, 1975, Ser. No. 593,670

Claims priority, application Germany, July 6, 1974, 2432572

Int. Cl.[2] B01J *2/12*

U.S. Cl. 264—117 **1 Claim**

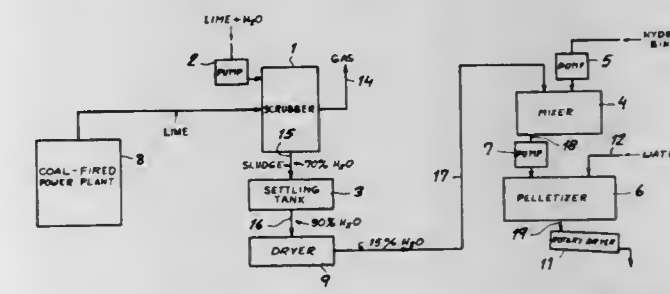

1. A method of making hard and water-stable aggregate or filler pellets from the exhaust gas of an electric generating coal-fired power plant, said exhaust gas containing solid particles and gaseous SO_2, SO_3 and HF pollutants comprising:

a. removing and collecting said solid particles from said exhaust gas,

b. scrubbing said particulate-free exhaust gas with water in the presence of pulverulent lime to produce a sludge containing compound products from said gaseous pollutants,

c. sedimenting said sludge and water,

d. decanting the water from the sludge to reduce the water content to 20% - 40% by weight and produce a concentrated sludge,

e. heating the concentrated sludge to reduce the water content to 10% -20%,

f. mixing said concentrated sludge with a binder selected from the group consisting of hydraulic cement and waterglass, and a quantity of the collected solid particles to thicken the heated concentrated sludge,

g. introducing said mixture and water into a pelletizing drum to form pellets therefrom, and

h. drying the formed pellets into hard water-stable pellets.

4,064,213

CREPING PROCESS USING TWO-POSITION ADHESIVE APPLICATION

Nicholas W. Lazorisak, Hockessin, Del.; Fredric A. Christiansen, West Chester, and John M. Harriz, Ridley Park, both of Pa., assignors to Scott Paper Company, Philadelphia, Pa.

Filed Feb. 9, 1976, Ser. No. 656,710

Int. Cl.[2] B32B *3/28;* **B31F** *1/14*

U.S. Cl. 264—134 **9 Claims**

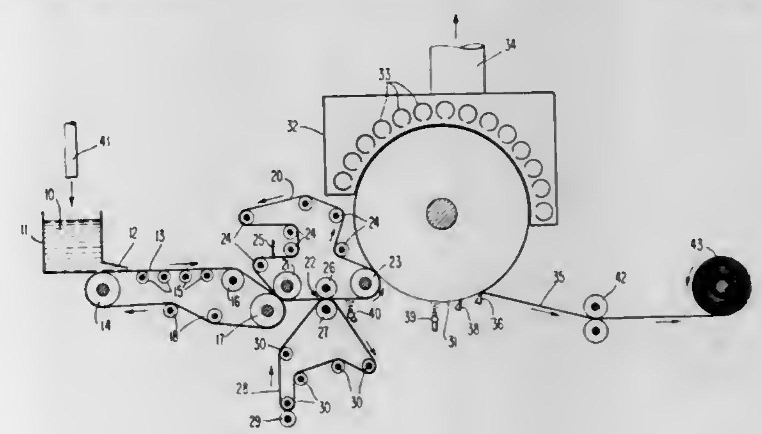

1. A method of creping a web from a heated creping surface comprising:

applying a layer of a first creping adhesive directly onto the heated creping surface;
applying a second creping adhesive to the web;
pressing the web onto the already formed layer of first creping adhesive to contact the second creping adhesive with the first creping adhesive for adhesively attaching the web to the creping surface;
creping the web from the creping surface;
said first creping adhesive being softer than said second creping adhesive and wherein said creping of the web from the creping surface is accomplished with a creping blade urged against the creping surface with sufficient force to crepe by shearing said layer of first creping adhesive whereby said second creping adhesive is essentially removed from the creping surface and a layer consisting essentially of said first creping adhesive is retained on said creping surface after creping the web from the creping surface.

4,064,214
PROCESS FOR MAKING POLYTETRAFLUOROETHYLENE YARN
Emerson B. FitzGerald, Wilmington, Del., assignor to E. I. Du Pont de Nemours and Company, Wilmington, Del.
Filed Sept. 22, 1975, Ser. No. 615,723
Int. Cl.[2] B29H *7/18*
U.S. Cl. 264—147 **4 Claims**

1. A process for forming a polytetrafluoroethylene yarn which comprises
1. forming an oriented film consisting of polytetrafluoroethylene having a tensile strength of 50,000–100,000 pounds per square inch by drawing a sintered polytetrafluoroethylene sheet at a temperature of about 340°-400° C. from about 5 to 30 times its original length;
2. passing the oriented film through a fibrillating means comprising a jet through which a high velocity fluid is passed and is impinged upon the oriented film thereby forming a yarn of entangled irregularly shaped nonuniform staple fibrils.

4,064,215
METHOD OF MANUFACTURING PNEUMATIC TUBULAR TIRES
Jumei Halada; Hiromi Akiyoshi, both of Kodaira, and Tsutomu Matsunaga, Higashi-Murayama, all of Japan, assignors to Bridgestone Tire Company Limited, Tokyo, Japan
Filed Mar. 8, 1976, Ser. No. 664,721
Claims priority, application Japan, Mar. 13, 1975, 50-30385
Int. Cl.[2] B29C *5/04, 25/00;* **B29H** *17/00*
U.S. Cl. 264—236 **14 Claims**

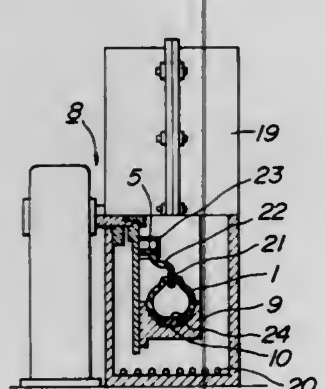

1. A method of manufacturing a pneumatic tubular tire having a tubular cross section in a radial direction of the tire and comprising a tread portion, side portions and a bottom portion, comprising the steps of:
1. coaxially aligning a core of a split mold assembly having an outer peripheral surface coincident with an inner profile of a base tire composed of the bottom portion, contiguous side portions and a continuous opening corresponding to the tread portion in a circumferential direction of the tire, within separable mold members of the split mold assembly having an inner peripheral surface coincident with an outer profile of the base tire to define a first molding cavity therebetween;
2. molding a fluidizable high polymer material, selected from the group consisting of polyurethane-based polymers, thermoplastic resins, thermoset resins, natural rubbers and synthetic resins, in the first molding cavity to form the base tire;
3. separating the separable mold members and core to remove the molded base tire;
4. setting the molded base tire within a tread ring of a centrifugal molding machine having an inner peripheral surface corresponding to an outer peripheral surface of the tread portion and part of the side portions to define a second molding cavity in the continuous opening;
5. pouring a fluidizable high polymer material of a low viscosity thermoset resin selected from the group consisting of polyether urethane resins and polyester urethane resins into the second molding cavity by centrifugal force to mold the tread portion and hence produce a final tire; and
6. removing the tire product having a desired tubular cross section from the tread ring.

4,064,216
METHOD OF RESEALING A CABLE JOINT
David Turner Parr, Croft, near Warrington, England, assignor to BICC Limited, London, England
Filed Mar. 22, 1976, Ser. No. 669,331
Int. Cl.[2] B29C *5/00;* **B29F** *1/00*
U.S. Cl. 264—263 **16 Claims**

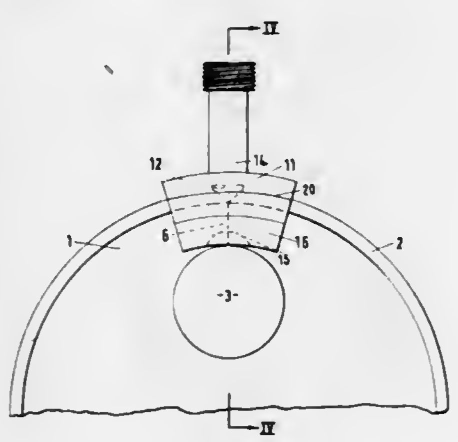

1. In a method of making a connection between a plastics sheathed cable comprising at least one conductor and an existing cable joint of a kind in which connections between the conductors of at least two cables are surrounded by an enclosure divided transversely of the axis of at least one of the cables into at least two separately formed parts secured together in a fluid-tight manner, at least one of said separately formed parts being of plastics material and including an end wall sealed in a fluid-tight manner to the plastics sheath of at last one cable protruding into the enclosure through a hole in said end wall at one end of said joint, the steps comprising:
a. opening up the enclosure to expose the existing conductor joint and removing at least said separately formed plastics part including said end wall;
b. applying to the cable sheath at said end of the joint a new part of heat softenable plastics material including and end wall which has at least one hole of a size appropriate to a cable at said end of the existing joint and having a split between said hole and a peripheral edge of said new part;
c. passing a length of said plastics sheathed cable through a further hole in the end wall of said new part and connecting its conductor or conductors to at least one conductor of at least one of the cables of the existing joint;
d. applying about a peripheral portion of said new part a mould enclosing only the split and portions of said new part adjacent said split, said mould having ports for the admission and discharge of molten thermoplastics material;
e. injecting molten thermoplastics material into the interior of the mould through at least one port, which thermoplastics material is compatible with the plastics material of the new part of the enclosure and is at a temperature appreciably above the softening point of said material;
f. after a sufficient quantity of molten thermoplastics material has passed through the mould and out of at least one other port of the mould to soften surfaces of said edges, sealing the mould;
g. cooling the molten thermoplastics material in he mould forming an effective bond between said edges of the new part;
h. effecting fluid-tight seals between each cable and the end wall of said new part of the enclosure;
i. and re-closing the enclosure.

4,064,217
PROCESS FOR RECOVERING ALUMINUM FROM ALUNITE ORE
George J. Hartman, 4959 Allison St., Arvada, Colo. 80002, and Michael G. Darland, 645 Estes, Lakewood, Colo. 80215
Filed Sept. 30, 1976, Ser. No. 728,215
Int. Cl.[2] C01F *7/06*
U.S. Cl. 423—120 **7 Claims**

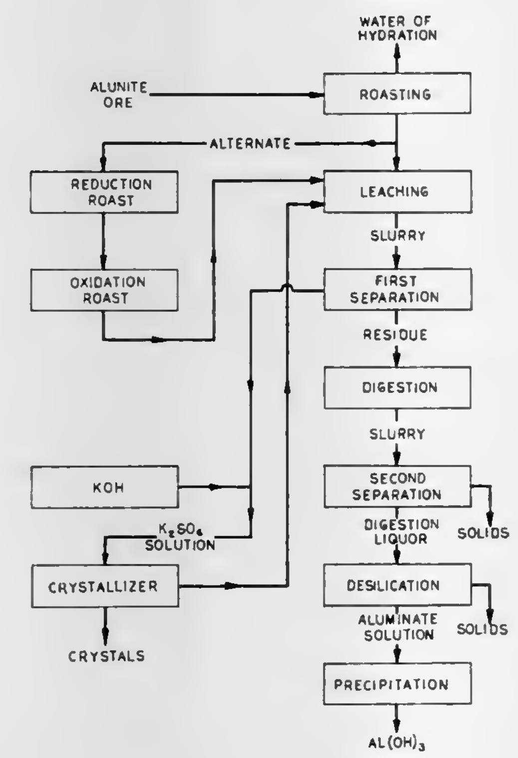

1. A process for recovering aluminum values for alunite ore comprising the steps of:
a. leaching the alunite ore with potassium hydroxide and recovering a liquid portion containing compounds of sulphur and alkali metals, including potassium sulfate and a residue portion containing aluminum values;
b. adding an effective amount of potassium hydroxide to the liquid portion recovered from step (a) to raise the concentration of potassium ion in said liquid for increasing the recovery of potassium sulfate at a given temperature;
c. precipitating potassium sulfate from said liquid of step (b) and recovering said potassium sulfate precipitate therefrom;
d. recycling said liquid from which potassium sulfate has been recovered for use in said leaching step (a); and
e. treating the residue portion recovered from step (a) and further treating said residue to recover the aluminum values therein.

4,064,218
REMOVAL OF PHOSGENE FROM OFF-GASES
Heinrich Scholz, Heidelberg; Martin Decker, Ludwigshafen, and Franz Neumayr, Weisenheim, all of Germany, assignors to BASF Aktiengesellschaft, Ludwigshafen, Germany
Filed June 21, 1976, Ser. No. 697,770
Claims priority, application Germany, July 15, 1975, 2531545
Int. Cl.[2] B01D *53/34*
U.S. Cl. 423—240 **4 Claims**

1. A process for removing phosgene from off-gas which comprises washing the off-gas with an aqueous solution containing from 1 to 50% by weight of sodium hydroxide or potassium hydroxide and from about 0.1 to 10% by weight of ammonia, said washing step being carried out at a temperature of from about 10° to 100° C.

4,064,219
METHOD OF INJECTING AMMONIA INTO A FLUE FOR WASTE GASES
Yuzo Yamashita, Kobe; Masahiro Kishi, and Yasumasa Ishibashi, both of Akashi, all of Japan, assignors to Mitsubishi Jukogyo Kabushiki Kaisha, Japan
Continuation-in-part of Ser. No. 230,400, Feb. 29, 1972, abandoned. This application Aug. 4, 1975, Ser. No. 601,337
Int. Cl.[2] C01B *17/00;* **C01C** *1/24*
U.S. Cl. 423—242 **2 Claims**

1. In a method of injecting a gaseous mixture of ammonia and air into an exit flue, connected to the flue gas discharge end of an air heater receiving waste hot gas from an oil-fired boiler and having an air supply conduit and effecting heat exchange between the hot gases in a flue, leading from the boiler to the air heater, and the cooler air in the air conduit, from a number of spaced nozzles arranged in the exit flue, downstream of the air heater, in spaced groups distributed substantially uniformly across the exit flue cross-section and each including at least one nozzle, to neutralize sulfuric acid components in the flue gas, with the exit flue having positioned therein, downstream of the nozzles, structures including precipitators, the improvement comprising measuring the amounts of sulfuric acid components at uniformly spaced points of a rectangular grid extending across the exit flue cross-section downstream of the air heater; measuring the temperature at such uniformly spaced points; setting a distribution pattern of the gaseous mixture discharged from at least one nozzle of each group of nozzles to conform the distribution of the injected ammonia to the measured sulfuric acid component distribution; and compensating for the non-uniform distribution of the sulfuric acid components and the non-uniform temperature distribution over the cross-section of the exit flue downstream of the air heater by controlling total flow of ammonia, without modifying such distribution pattern, so as to adjust individually the molar ratio of the injected ammonia to the sulfuric acid components at each point in accordance with the measured temperature at the respective point, to a value such that the resulting reaction products will not melt and adhere to any structure connected to the exit flue downstream of the air heater.

4,064,220
REMOVAL OF DISSOLVED ORGANIC MATTER FROM ACIDIC AQUEOUS SOLUTION
Alexander Alon, Haifa, Israel, assignor to IMI (TAMI) Institute for Research and Development, Haifa, Israel
Continuation-in-part of Ser. No. 379,510, July 16, 1973, abandoned. This application Apr. 1, 1976, Ser. No. 672,812
Claims priority, application Israel, Aug. 30, 1972, 40253
Int. Cl.[2] C01B *25/16, 17/90*
U.S. Cl. 423—321 R **12 Claims**

1. A process for the purification of an aqueous mineral acid solution containing dissolved organic matter, comprising adding to said solution a first, water-soluble compound being an aldehyde or an oligomer thereof and a second compound capable of polymerizing together with said first compound

under the strongly acidic conditions within the solution, or a precondensate of said first and second compounds which precondensate is capable of further polymerization under the strongly acidic conditions within the solution, allowing the polymerization of the said first and second compounds or the said precondensate to occur within said solution to form a polymer insoluble in said mineral acid solution which polymer forms a precipitate by coprecipitation with said organic matter, and recovering a refined mineral acid solution from the resulting mixture.

4,064,221

PROCESS FOR OBTAINING NITRIC ACID OF A CONCENTRATION HIGHER THAN THE AZEOTROPIC CONCENTRATION BY MEANS OF THE ABSORPTION OF NITROGEN OXIDES IN WATER OR DILUTED NITRIC ACID

Luis Marzo Rodrigo, Cebreros No. 76, Madrid 11, and Jesus Marzo Rodrigo, Avda, Bruselas No. 69, Madrid 28, both of Spain

Filed Sept. 7, 1976, Ser. No. 720,559
Claims priority, application Spain, June 8, 1976, 448675
Int. Cl.[2] C01B *21/40*

U.S. Cl. 423—393 **2 Claims**

1. A process for obtaining nitric acid of a concentration higher than the azeotropic concentration by means of the absorption of nitrogen oxides in diluted nitric acid, comprising the steps of:

reacting gases containing nitrogen oxides with dilute subazeotropic nitric acid to partially decompose the nitric acid by the action of NO contained in the gases, forming additional NO_2 to increase the partial pressure of NO_2 in the gases;

subsequently compressing the gases;

passing azeotropic nitric acid and the compressed gases containing the high partial pressure of NO_2 through an absorption chamber to form super-azeotropic nitric acid;

distilling the super-azeotropic nitric acid to separate it into commercially pure nitric acid and azeotropic nitric acid;

returning the azeotropic nitric acid to the absorption chamber for use in said passing step;

injecting the gases which have been passed through said absorption chamber into a secondary absorption chamber to react with the partially decomposed dilute nitric acid from said reacting step to form sub-azeotropic nitric acid; and

returning at least a portion of said sub-azeotropic acid for use in said reacting step.

4,064,222

NITROGEN FIXATION AND MOLECULAR MAGNETO HYDRODYNAMIC GENERATION USING A COAL GASIFICATION GAS STREAM

George Miller Bretz, Verona, Pa., assignor to Koppers Company, Inc., Pittsburgh, Pa.

Continuation-in-part of Ser. No. 659,728, Feb. 20, 1976, abandoned. This application Apr. 7, 1977, Ser. No. 785,460
Int. Cl.[2] H02K *21/20;* **C01B** *21/20*

U.S. Cl. 423—393 **33 Claims**

1. A method of using gases of combustion to concurrently generate electricity and fix nitrogen oxides comprising:

a. combusting coal in an oxygen rich, air free atmosphere within a reactor at superatmospheric pressure and within a temperature range of 2800° F. to 3200° F. to form a producer gas stream rich in CO and H_2 and including molten inorganic impurities and gaseous sulfur and sulfur compounds;

b. collecting said inorganic impurities in the bottom of said reactor;

c. removing said inorganic impurities from said bottom of said reactor such that said superatmospheric pressure within said reactor is maintained;

d. removing said producer gas stream from said reactor within a temperature range of 2600° F. to 3000° F. while maintaining said producer gas at said superatmospheric pressure;

e. substantially removing said gaseous sulfur and sulfur compounds from said producer gas stream while maintaining said producer gas at said superatmospheric pressure;

f. combining said producer gas with an oxidant gas which is rich in nitrogen and includes lime, while maintaining the resultant mixture at said superatmospheric pressure, to form a combustion gas;

g. combusting said combustion gas at said superatmospheric pressure within a critical temperature range which is above that at which nitrogen oxides are formed, to form a combustion products gas;

h. precipitating out of said combustion products gas all remaining said gaseous sulfur and sulfur compounds by reacting said gaseous sulfur and sulfur compounds with lime to form liquified solid particles of CaS, while maintaining said combustion products gas at said superatmospheric pressure and within said critical temperature range;

i. after precipitating out all said gaseous sulfur and sulfur compounds from said combustion products gas, adding to said combustion products gas an alkali metal salt, while maintaining said combustion products gas at said superatmospheric pressure and within said critical temperature range to form a seeded gas;

j. accelerating the velocity of said seeded gas to a supersonic velocity while maintaining said seeded gas at said superatmospheric pressure and within said critical temperature range;

k. passing said seeded gas at said supersonic velocity and at said superatmospheric pressure and within said critical temperature range into an MHD generator, thereby generating electricity;

l. adiabatically expanding the volume of said seeded gas while simultaneously reducing said superatmospheric pressure to atmospheric pressure and simultaneously reducing the temperature of said seeded gas at a rate sufficient to fix substantially all of the nitrogen oxides therein all within said MHD generator;

m. extracting said alkali metal for recycling; and

n. collecting said nitrogen oxides.

4,064,223

PROCESS FOR THE PRODUCTION OF CONCENTRATED SULFURIC ACID AND/OR OLEUM FROM A WET SULFUR DIOXIDE FEED

Franz Maier, Markt Schwaben, and Robert Peichl, Kelheim, both of Germany, assignors to Sud-Chemie AG, Munich, Germany

Filed Feb. 3, 1976, Ser. No. 655,027
Claims priority, application Germany, Feb. 12, 1975, 2505828
Int. Cl.[2] C01B *17/72*

U.S. Cl. 423—522 **7 Claims**

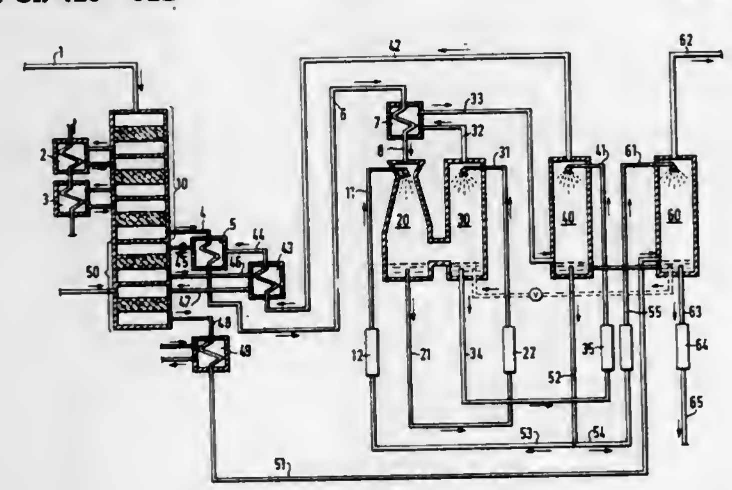

1. In a process for the production of concentrated sulfuric acid and/or oleum by the catalytic oxidation of SO_2 to SO_3 using a gas which contains water vapor in addition to inert components, SO_2 and oxygen, and absorption of the SO_3 is sulfuric acid, the improvement which consists essentially of the steps of

a. passing a wet gas containing at least 5 g/Nm[3] and up to 35 g/Nm[3] water vapor in a first stage over a primary catalyst so as to oxidize the SO_2 to SO_3,

b. contacting the reaction gas emerging from step (a) with cold 96 to 99% sulfuric acid so as to cool said gas from an inlet temperature of about 180° to 200° C to an exit temperature of about 40° to 60° C,

c. absorbing the water vapor content of the gas emerging from step (b) with cold 96 to 99% sulfuric acid in a separate unit,

d. reheating the gas emerging from step (c),

e. contacting the gas emerging from step (d) in an intermediate absorption unit with 98 to 99% sulfuric acid so as to absorb substantially all SO_3 formed in step (a),

f. oxidizing the unreacted SO_2 in the gas emerging from step (e) in a second stage on a secondary catalyst substantially in the absence of water vapor,

g. absorbing the SO_3 from the gas emerging from step (f) in sulfuric acid.

4,064,224

METHOD OF MAKING FIBROUS ALKALI TITANATES

Takashi Kawamata, Takatsuki; Tsuneo Inoue, Moriguchi, and Eiichi Hirota, Hirakata, all of Japan, assignors to Matsushita Electric Industrial Co., Ltd., Japan

Filed Jan. 28, 1976, Ser. No. 653,120
Claims priority, application Japan, Feb. 5, 1975, 50-15577
Int. Cl.[2] C01G *23/00*

U.S. Cl. 423—598 **14 Claims**

1. A method of making fibrous alkali titanates consisting essentially of: preparing a molten mixture including a titanium compound and an alkali metal compound in a molar ratio of 1.0 to 8.0 in terms of $TiO_2:M_2O$ by heating, at a temperature of 1200° to 1600° C, a powder mixture including said titanium compound and said alkali metal compound in said molar ratio, M designating one or more elements selected from the group consisting of Na, K, Rb and Cs; cooling the thus heated mixture to room temperature; and washing the thus treated product.

4,064,225

METHOD FOR PRODUCING HYDROGEN OR DEUTERIUM FROM STORABLE SOLID PROPELLANT COMPOSITIONS BASED ON COMPLEX METAL BORON COMPOUNDS

William M. Chew; Orval E. Ayers; James A. Murfree, and Pasquale Martignoni, all of Huntsville, Ala., assignors to The United States of America as represented by the Secretary of the Army, Washington, D.C.

Division of Ser. No. 669,064, March 22, 1976. This application Nov. 15, 1976, Ser. No. 741,590
Int. Cl.[2] C01B *1/02, 4/00*

U.S. Cl. 423—648 R **3 Claims**

1. A method for producing hydrogen or deuterium having a temperature from about 240° C to about 650° C from an initiated reaction that is self-sustaining, said method comprising:

i. combining a stoichiometric amount of a first reactant compound which is a complex metal boron compound selected from the complex metal boron compounds of the general formula $M(BH_4)_x$ or $M(BD_4)X$, wherein M is a metal selected from the group consisting of an alkali metal or an alkaline earth metal and x equals the valence of said metal, H is hydrogen, and D is deuterium, and a second reactant compound which is an ammonium salt selected from the ammonium salts of the general formula $(NH_4)_2Y$ or a deuteroammonium salt selected from the deuteroammonium salts of the general formula $(ND_4)_2Y$, wherein Y in said ammonium salt and Y in said deuteroammonium salt represent the anion Cr_2O_7;

ii. mixing to achieve a uniform mixture of said first reactant compound and said second reactant compound;

iii. forming said mixture into a pellet by pressing in a die while using a pressure from about 500 pounds total load up to about 10,000 pounds total load;

iv. placing said pellet in a sealable combustion apparatus adapted for operating under vacuum or pressure, said pellet being placed in direct contact with an ignition wire comprised of 80 weight percent nickel and of 20 weight percent chromium;

v. purging said combustion apparatus by evacuation or by purging with an inert gas to remove substantially all air and water vapor; and thereafter,

vi. supplying an amount of electrical energy to produce sufficient heat to initiate a reaction which is a self-sustaining reaction whereby said hydrogen or deuterium is produced until said reaction is completed.

4,064,226

METHOD FOR THE GENERATION OF HYDROGEN

Franz Becker, and Philipp Jäger, both of Erlangen, Germany, assignors to Siemens Aktiengesellschaft, Berlin and Munich, Germany

Filed May 6, 1976, Ser. No. 683,691
Claims priority, application Germany, May 12, 1975, 2521090
Int. Cl.[2] C01B *1/07*

U.S. Cl. 423—657 **7 Claims**

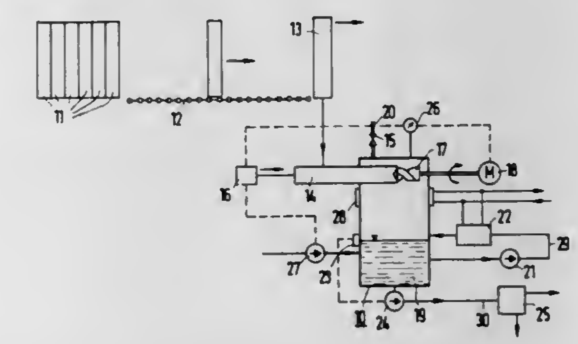

1. A method for generating hydrogen by the reaction of a metal with an aqueous salt solution comprising:

a. mechanically forming a powder from a pressed blank of the metal out of the presence of the aqueous salt solution;

b. introducing said powder as it is formed into said aqueous salt solution.

4,064,227

RADIOIMMUNOASSAY METHOD FOR THE DETERMINATION OF CARDIOTONIC GLYCOSIDES

James L. Brown, House Springs, and Leo R. Lyle, Webster Groves, both of Mo., assignors to Mallinckrodt, Inc., St. Louis, Mo.

Filed Mar. 17, 1975, Ser. No. 558,756
Int. Cl.[2] G01N *33/00;* **G21H** *5/02*

U.S. Cl. 424—1 **6 Claims**

1. A radioimmunoassay method for the in vitro determination of a cardiotonic glycoside selected from the group consisting of digoxin and digitoxin in unextracted blood serum which comprises the steps of

a. mixing a sample of blood serum whose cardiotonic glycoside content is to be determined with a reagent comprising an aqueous buffer solution containing a radioactive hapten for said glycoside;

b. adding to the mixure in an amount by volume equal to the amount by volume of the sample of blood serum an antiserum containing antibody capable of immunoreactivity with said glycoside and said hapten;

c. incubating the resultant mixture at a temperature and for a sufficient period of time to produce substantial equilibration of the antibody bound hapten and unbound hapten;

d. adding a relatively thin strip of a membrane consisting essentially of an ion-exchange resin to the mixture and maintaining said membrane in contact therewith at a temperature and for a sufficient period of time to separate the unbound hapten; and
e. determining the relative amounts of antibody bound radioactive hapten and unbound radioactive hapten.

4,064,228

ANTIGENS AND IMMUNOASSAYS FOR MORPHINE AND RELATED 3-OXYBENZOMORPHAN COMPOUNDS

Stanley Joseph Gross, Encino, Calif., assignor to Biological Developments, Inc., Encino, Calif.

Continuation-in-part of Ser. No. 528,044, Nov. 29, 1974, Ser. No. 462,517, April 19, 1974, Ser. No. 160,559, July 7, 1971, Pat. No. 3,940,475, and Ser. No. 480,097, June 17, 1974, abandoned, said Ser. No. 528,044, is a division of Ser. No. 253,632, May 15, 1972, abandoned, which is a continuation-in-part of Ser. No. 89,929, Nov. 16, 1970, abandoned, which is a continuation-in-part of Ser. No. 45,558, June 11, 1970, abandoned, said Ser. No. 462,517, is a continuation of Ser. No. 89,929, , said Ser. No. 160,559, is a continuation-in-part of Ser. No. 89,929, , said Ser. No. 480,097, is a continuation of Ser. No. 160,150, July 6, 1971, abandoned, which is a continuation-in-part of Ser. No. 89,929,. This application May 19, 1975, Ser. No. 578,547

Int. Cl.^{2} **A61K** *39/00;* **G01N** *33/16;* **G21H** *5/02*

U.S. Cl. 424—1 **26 Claims**

1. An antigen of formula:

$[R—N{=}Y—R'—L]_nZ$.

where R is a 3-oxybenzomorphan compound; Y is selected from the class consisting of N and CH and is connected to a ring carbon atom of an aromatic component of R′, R′ also having a moiety capable of reacting with a functional group of Z; Z is a carrier molecule conferring immunogenicity, the combination of the moiety of R′ and the functional group of Z forming the linking group L; and *n* is from 1 to the number of available functional groups on Z in its conjugated state; when Y is N, a diazo linkage is present, this diazo linkage being formed by diazotization of a primary amino group on the material from which R′ formed; when Y is CH, R′ is the remaining aromatic component of an aromatic aldehyde, and CH is the condensation residue of the characteristic keto group of the aldehyde, where bonding to R is through an available ring carbon atom of the aromatic ring of the 3-oxybenzomorphan hapten moiety.

20. An immunochemical method of assaying for the presence of a 3-oxybenzomorphan metabolite target in a sample, wherein said method employs an antibody obtained by the immunologic response of a vertebrate animal to administration of an antigen according to claim 1 and wherein said antibody is specific to the target, said method also employing a standard, the antibody binding with the target to form an antibody-target complex and competitively binding with the standard to form an antibody-standard complex, the antibody-standard complex having an artificially introduced radiation label enabling the complex to be assayed quantitatively by measurement of radiation emanating from it, the affinities of the antibody for the standard and for target being known quantitatively, said method comprising allowing a known quantity of the sample and a known quantity of the standard to compete for binding with a known quantity of the antibody and determining the radiation emanating from the antibody-standard complex, thereby enabling the quantity of antibody-bound standard to be calculated and the quantity of target in the sample to be deduced.

4,064,229

DENTAL PLAQUE DISCLOSING AGENT

Philip L. Block, 416 Deerfield Drive, Moraga, Calif. 94556, and John P. Derdivanis, 6284 Crown Ave., Oakland, Calif. 94600

Continuation of Ser. No. 584,224, June 5, 1975, Pat. No. 3,997,658, which is a continuation of Ser. No. 343,764, March 22, 1973, abandoned, which is a division of Ser. No. 109,054, Jan. 22, 1971, Pat. No. 3,723,613. This application July 1, 1976, Ser. No. 701,921

Int. Cl.^{2} **A61K** *29/00;* **G01N** *21/02, 21/16*

U.S. Cl. 424—7 **2 Claims**

1. A composition in the form of an aqueous solution, for application to the oral cavity to accomplish the differential disclosure of dental plaque, said composition consisting essentially of FDC Red No. 3 and FDC Blue No. 1, said Blue No. 1 being present in an amount from about 0.1 to 4 parts by weight per each part by weight of FDC Red No. 3, said composition differentially staining areas of old, thick accumulations of dental plaque blue and thin, recent deposits of dental plaque red, whereby effectively practiced plaque removal on a given tooth shows, and can be photographed, as either no stain pickup or thin deposits staining red, while certain areas on said tooth if consistently missed, will be considerably thicker and therefore stained blue, and on some teeth, an intermediate definite purple zone can be distinguished between the red and blue areas, said intermediate definite purple area tending to look more like blue plaque than red plaque, but the thickness of this purple plaque being less than that of blue plaque, while tooth surfaces not covered with plaque do not show the dye at all.

4,064,230

POLYENIC MACROLIDE COMPOSITIONS

Harry W. Gordon, Bronx, N.Y., and Carl P. Schaffner, Trenton, N.J., assignors to Schmid Laboratories, Inc., Little Falls, N.J.

Division of Ser. No. 560,628, March 21, 1975, Pat. No. 4,000,254, which is a division of Ser. No. 80,509, Oct. 13, 1970, Pat. No. 3,891,752, which is a continuation-in-part of Ser. No. 769,919, Feb. 5, 1969, abandoned, which is a continuation-in-part of Ser. No. 623,847, March 17, 1967, Pat. No. 3,584,118, which is a continuation-in-part of Ser. No. 544,712, April 25, 1966, abandoned, and a continuation-in-part of Ser. No. 838,706, July 2, 1969, abandoned. This application Oct. 8, 1976, Ser. No. 731,000

Int. Cl.^{2} **A61K** *9/52, 9/30, 35/00*

U.S. Cl. 424—19 **14 Claims**

1. A composition comprising a capsule containing a multiplicity of beadlets, said beadlets together comprising (1) about 25 milligrams to about 100 milligrams of a polyenic macrolide selected from the class consisting of hamycin and mediocidin and (2) an absorbent material which binds with said polyenic macrolide in a substantially acidic pH environment and loses its affinity for said polyenic macrolide in a substantially neutral pH environment, the ratio of said polyenic macrolide to said absorbent material being about 1 to 2 to about 1 to 8.

4,064,231

DENTIFRICE COMPOSITION

Toshiro Asakawa, Funabashi; Atsuo Ishida, Chiba, and Shizuo Hayashi, Sugitomachi, all of Japan, assignors to Kao Soap Co., Ltd., Tokyo, Japan

Filed Aug. 18, 1976, Ser. No. 715,378

Claims priority, application Japan, Sept. 4, 1975, 50-107421

Int. Cl.^{2} **A61K** *7/18*

U.S. Cl. 424—52 **3 Claims**

1. A dentifrice composition containing a water-soluble fluorine-containing caries-preventing agent in an amount of from 100 to 2,000 ppm calculated as fluorine, and from 0.3 to 13 percent by weight of

montmorillonite having the composition, in terms of percent by weight, calculated on an anhydrous basis,

SiO_2	60.0 to 70.0
MgO	2.0 to 5.0
Fe_2O_3	zero to 2.0
Al_2O_3	20.0 to 30.0
Na_2O	2.0 to 5.0

4,064,232

PROCESS FOR ISOLATING THE IMMUNOGENIC COMPONENTS OF INFLUENZA VIRUSES

Helmut Bachmayer, Maria Enzersdorf, and Gerhard Schmidt, Modling, both of Austria, assignors to Sandoz Ltd., Basel, Switzerland

Continuation of Ser. No. 539,349, Jan. 8, 1975, abandoned. This application May 18, 1976, Ser. No. 687,453

Claims priority, application Switzerland, Jan. 14, 1974, 447/74

Int. Cl.^{2} **A61K** *39/18*

U.S. Cl. 424—89 **23 Claims**

1. A method of isolating the hemagglutinin and neuramuridase components from influenza virus, comprising treating influenza virus in an aqueous medium with a cationic detergent to selectively solubilise components, and separating the resulting solubilised components from residual sub-viral particles.

4,064,233

ANTIBIOTIC A-4696

Robert L. Hamill, New Ross; William M. Stark, and Donald C. DeLong, both of Indianapolis, all of Ind., assignors to Eli Lilly and Company, Indianapolis, Ind.

Continuation-in-part of Ser. No. 533,570, Dec. 17, 1974, Pat. No. 3,952,095, which is a continuation-in-part of Ser. No. 259,334, June 2, 1972, abandoned, which is a continuation-in-part of Ser. No. 118,674, Feb. 25, 1971, abandoned. This application Apr. 19, 1976, Ser. No. 678,511

Int. Cl.^{2} **A61K** *35/74*

U.S. Cl. 424—118 **5 Claims**

1. A method for promoting growth and improving feed efficiency in poultry and swine which comprises orally administering to said poultry and swine an effective growth promoting quantity of the antibiotic substance A-4696, or a pharmaceutically acceptable acid addition salt thereof.

4,064,234

METHODS AND PHARMACEUTICAL PREPARATION FOR THE TREATMENT OF HYPERCHOLESTEROLEMIA

Alan N. Howard, Cambridge, England, assignor to Bristol-Myers Company, New York, N.Y.

Continuation-in-part of Ser. No. 583,308, June 2, 1975, Pat. No. 4,041,153. This application Nov. 26, 1976, Ser. No. 744,909

Claims priority, application United Kingdom, June 4, 1974, 24794/74

Int. Cl.^{2} **A61K** *33/08, 33/10, 31/235, 31/19*

U.S. Cl. 424—157 **16 Claims**

1. A pharmaceutical composition for use in the treatment per os of hypercholesterolemia, which comprises a hypocholesteremic effective amount of
a. a compound selected from p-chlorophenoxyisobutyric acid, the methyl, ethyl, propyl or butyl ester thereof or a sodium, potassium, calcium, magnesium, aluminum, zinc, bismuth or iron salt thereof, and
b. an ingestible non-toxic aluminum or magnesium salt capable of dissolution in human gastrointestinal juices, the total amount of non-toxic metal being from 3.2 to 90 equivalents per mole of p-chlorophenoxyisobutyric acid or ester or salt thereof.

4,064,235

DOPAMINE DERIVATIVE COMPOUNDS, PREPARATION THEREOF AND MEDICINE CONTAINING SAME

Noboru Yanaihara, Shizuoka; Toshiji Igarashi, Tokorozawa, and Youichi Kunii, Funabashi, all of Japan, assignors to Eisai Co., Ltd., Tokyo, Japan

Filed Aug. 17, 1976, Ser. No. 715,008

Claims priority, application Japan, Aug. 21, 1975, 50-100623; Jan. 19, 1976, 51-4022

Int. Cl.^{2} **A61K** *37/00;* **C07C** *103/52*

U.S. Cl. 424—177 **14 Claims**

1. A compound having the formula:

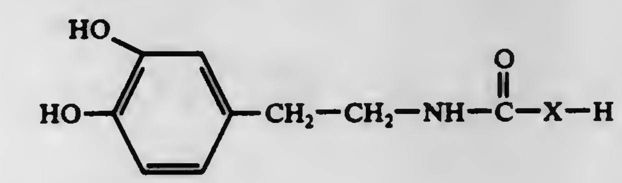

wherein X is a di- or tri-peptide residue derived from alanine, glycine, glutamine, isoleucine, lysine, leucine, tyrosine, proline or valine, or a pharmacologically acceptable acid addition salt thereof.

7. A method of increasing the renal blood flow rate in a subject requiring such treament, which comprises: administering to such subject a therapeutically effective amount of a compound having the formula:

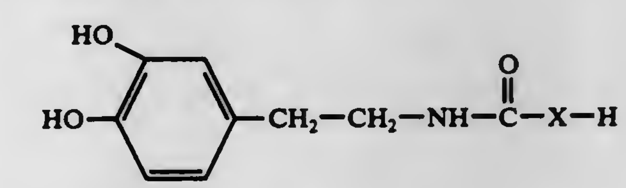

wherein X is a di- or tri-peptide residue derived from alanine, glycine, glutamine, isoleucine, lysine, leucine, tyrosine, proline or valine,

or a pharmacologically acceptable acid addition salt thereof.

4,064,236

PEPTIDE CARBAZATES AND PHARMACEUTICAL COMPOSITION

Conrad P. Dorn, Plainfield, and Shu S. Yang, Piscataway, both of N.J., assignors to Merck & Co., Inc., Rahway, N.J.

Filed Dec. 23, 1975, Ser. No. 643,721

Int. Cl.^{2} **A61K** *37/00;* **C07C** *103/52;* **A61K** *37/02*

U.S. Cl. 424—177 **9 Claims**

1. A compound of the formula:

$$B—P_4—P_3—P_2—NH—\underset{\displaystyle R_1}{\underset{|}{N}}—\overset{\displaystyle O}{\overset{\|}{C}}—O—\underset{\displaystyle R_2}{\underset{|}{CH}}—\overset{\displaystyle O}{\overset{\|}{C}}—R_3 \qquad \mathrm{I}$$

wherein
B is $C_{1\text{-}5}$alkanoyl, t-butoxycarbonyl or carbobenzyloxy,
P_4 is alanyl or prolyl,
P_3 is alanyl,
P_2 is prolyl or leucyl,
R_1 is $C_{1\text{-}5}$alkyl,
R_2 is methyl, benzyl or 4-aminobutyl, and
R_3 is hydroxy, $C_{1\text{-}5}$Alkoxy, amino, N-$C_{1\text{-}5}$alkylamino, N,N-di-($C_{1\text{-}5}$alkyl)amino, N-benzylamino, N-phenylamino, hydrazino, methylhydrazino, ethylhydrazino, phenylhydrazino, benzylhydrazino, benzyloxy, or p-iodobenzyloxy or

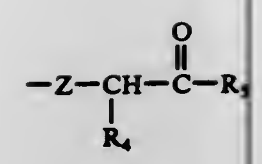

wherein
R_4 is methyl or benzyl, and
R_5 is hydroxy, C_{1-5}alkoxy, amino, N-C_{1-5}alkylamino, N,N-di-(C_{1-5}alkyl)amino, N-benzylamino, N-phenylamino, hydrazino, benzyloxy, or p-iodobenzyloxy and
Z is —NH— or —O—.

9. A pharmaceutical composition comprising a non-toxic pharmaceutically acceptable carrier and a therapeutically effective amount of a compound of the formula:

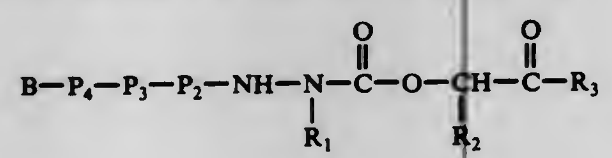

I

wherein
B is C_{1-5}alkanoyl, t-butoxycarbonyl or carbobenzyloxy,
P_4 is alanyl or prolyl,
P_3 is alanyl,
P_2 is prolyl or leucyl,
R_1 is C_{1-5}alkyl,
R_2 is methyl, benzyl or 4-aminobutyl, and
R_3 is hydroxy, C_{1-5}alkoxy, amino, N-C_{1-5}alkylamino, N-benzylamino, N-phenylamino, hydrazino, methylhydrazino, ethylhydrazino, phenylhydrazino, benzylhydrazino, benzyloxy, or

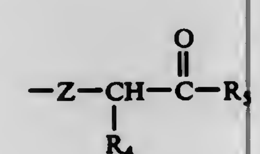

wherein
R_4 is methyl or benzyl, and
R_5 is hydroxy, C_{1-5}alkoxy, amino, N-C_{1-5}alkylamino, N-benzylamino, N-phenylamino, hydrazino, benzyloxy, or p-iodobenzyloxy and
Z is —NH— or —O—.

4,064,237

SYNERGISTIC PESTICIDAL MIXTURES OF PHOSALONE AND MALATHION AND PROCESS FOR CONTROLLING ARTHROPODS THEREWITH

Michael A. Gallo, Belle Meade, N.J., and Der-I Wang, Taipei, China /Taiwan, assignors to Rhodia, Inc., New York, N.Y.
Continuation-in-part of Ser. No. 550,902, Feb. 18, 1975, abandoned. This application Jan. 5, 1976, Ser. No. 647,262
Int. Cl.² A01N 9/36
U.S. Cl. 424—200 **7 Claims**

1. An arthropodicidal composition having an enhanced effectiveness against phosphate-resistant arthropods comprising O,O-diethyl-dithiophosphorylmethyl-3-chloro-6-benzoxazolone and O,O-dimethyl-S-(1,2-dicarbethoxyethyl), dithiophosphate, the weight ratio of amounts of O,O-diethyl-dithiophosphoryl-methyl-3-chloro-6-benzoxazolone and O,O-dimethyl-S-(1,2-dicarbethoxy ethyl) dithiophosphate being within the range from about 0.225:1 to about 50:1, the amounts of O,O-diethyl-dithiophosphoryl-methyl-3-chloro-6-benzoxazolone and O,O-dimethyl-S-(1,2-dicarbethoxy ethyl) dithiophosphate being selected within the stated range, each to synergize the effectiveness of the other.

4,064,238

ANTIBIOTIC COMPOSITION CONTAINING AN ANTIBIOTIC AND AS A POTENTIATING AGENT PYRROLIDONE CARBOXYLIC ACID OR DERIVATIVE THEREOF

Dominique Bocher, 11, rue du Moulin Vert, Paris-*, and Charles Pilet, 8, avenue du Buisson, Parc-Saint-Maur, both of France
Division of Ser. No. 387,611, Aug. 13, 1973, Pat. No. 3,920,814. This application Aug. 21, 1975, Ser. No. 606,438
Claims priority, application Luxembourg, Aug. 18, 1972, 65921
Int. Cl.² A61K *31/65, 31/71, 31/625, 31/545*
U.S. Cl. 424—227 **3 Claims**

1. An antibiotic composition comprising a tetracycline selected from the group consisting of tetracycline base and 7-dimethylamino-6-demethyl-6- deoxytetracycline and pyrrolidone carboxylic acid, wherein the weight ratio of pyrrolidone carboxylic acid to the tetracycline ranges between 1:5–100.

4,064,239

HALOGENATED UNSATURATED ALKYL BENZENEDISULFONAMIDES AS ANTHELMINTICS

Helmut H. Mrozik, Matawan, N.J., assignor to Merck & Co., Inc., Rahway, N.J.
Continuation-in-part of Ser. No. 533,352, Dec. 16, 1974, abandoned. This application Sept. 26, 1975, Ser. No. 616,331
Int. Cl.² C07C *143/80;* A61K *31/63*
U.S. Cl. 424—228 **13 Claims**

1.

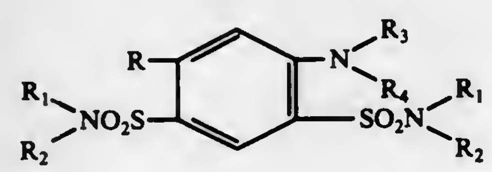

wherein R_1 and R_2 are each independently hydrogen or lower-alkyl; R is a halogenated unsaturated alkyl group containing from 2 to 6 carbon atoms, one or two double bonds or a single triple bond, and from 1 to 11 halogen atoms; and R_3 and R_4 are independently hydrogen, loweralkyl, benzyl, or phenyl.

13. A method for the treatment of liver fluke infections which comprises administering to an animal infected with liver flukes an effective amount of a compound having the

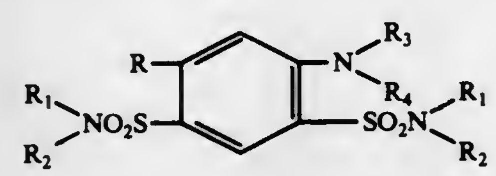

wherein R_1 and R_2 are each independently hydrogen or lower-alkyl; R is a halogenated unsaturated alkyl group containing from 2 to 6 carbon atoms, one or two double bonds or a single triple bond, and from 1 to 11 halogen atoms; and R_3 and R_4 are independently hydrogen, loweralkyl, benzyl, or phenyl.

4,064,240

21-CYCLIC ACETALS OF STEROIDAL 21-ALDEHYDES AND METHODS OF PREPARATION

Michael Marx, Sunnyvale, and Denis John Kertesz, Menlo Park, both of Calif., assignors to Syntex (U.S.A.) Inc., Palo Alto, Calif.
Filed Nov. 17, 1976, Ser. No. 742,980
Int. Cl.² C07J *71/00;* A61K *31/58*
U.S. Cl. 424—241 **22 Claims**

22. A method for relieving symptoms associated with inflammatory disorders comprising, administering an effective amount of a compound of the formula:

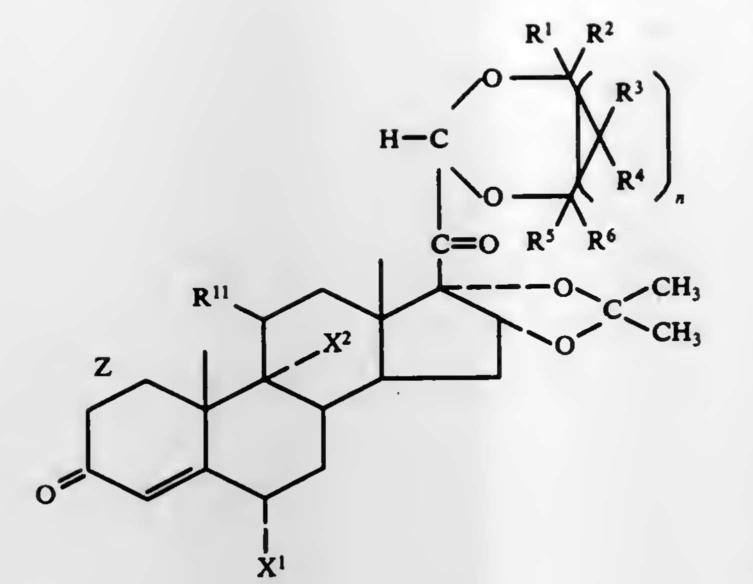

(I)

wherein:
n is 0 or 1;
each of R^1 - R^6 is independently hydrogen or lower alkyl containing 1 to 4 carbon atoms and when n is 0, any two of R^1 - R^6 on adjacent carbon atoms, taken together, are lower alkylene containing 3 to 5 carbon atoms;
R^{11} is chloro or hydroxy;
X^1 and X^2 are independently hydrogen, chloro or fluoro with the proviso that when R^{11} is chloro, X^2 is chloro; and
Z is a single or double bond; or a pharmaceutical composition same.

4,064,241

7[(CARBOXYOXIRAN-3-CARBOXAMIDO)-PHENYLACETAMIDO]CEPHALOSPORIN DERIVATIVES

Barry Clive Ross, Birchington, and Braham Shroot, Canterbury, both of England, assignors to Pfizer Inc., New York, N.Y.
Filed Nov. 3, 1975, Ser. No. 628,543
Claims priority, application United Kingdom, Nov. 7, 1974, 48116
Int. Cl.² A61K *31/545;* C07D *501/36*
U.S. Cl. 424—246 **10 Claims**

1. A compound of the formula:

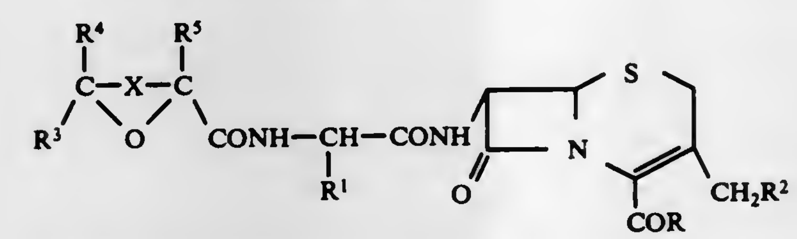

and the pharmaceutically acceptable base salts thereof, wherein
R^1 is a member selected from the group consisting of phenyl, thienyl and 2-furyl, and mono substituted phenyl wherein the substituent is chosen from the group consisting of halogen, hydroxy, lower alkyl, lower alkoxy and trifluoromethyl;
R is hydroxy, and R^2 is a member selected from the group consisting of pyrimidin-2-ylthio, 4,6-dimethylpyrimidin-2-ylthio, 4,5-dimethylthiazol-2-ylthio, 1,3,5-triazin-2-ylthio, 2-methyl-1,3,4-thiadiazol-5-ylthio, 2-methyl-1,3,4-oxadiazol-5-ylthio and 1-substituted-1,2,3,4-tetrazol-5-ylthio wherein the 1-substituent is chosen from the group consisting of lower alkyl, benzyl, phenyl, chlorophenyl and anisyl;
R^3 is a member selected from the group consisting of carboxy, $COOR^6$ wherein R^6 is chosen from the group consisting of lower alkyl, 5-indanyl, naphthyl, phenyl and mono substituted phenyl wherein the substituent is chosen from the group consisting of halogen, lower alkyl, lower alkoxy and trifluoromethyl, and $CONR^7R^8$ wherein R^7 and R^8 are each chosen from the group consisting of hydrogen, lower alkyl and cycloalkyl having from three to six carbon atoms;
R^4 and R^5 are each a member selected from the group consisting of hydrogen and lower alkyl, and X is a direct carbon-carbon link.

9. An antibacterial pharmaceutical composition comprising a compound as claimed in claim 1 and a pharmaceutically acceptable carrier.

10. A method for treating an animal of diseases caused by Gram-negative and Gram-positive bacteria, which comprises administering to said animal an antibacterially-effective amount of a compound as claimed in claim 1.

4,064,242

7-ACYLAMINO-3-[1-(2,3-DIHYDROXYPROPYL)TETRAZOLE-5-YLTHIOMETHYL]-3-CEPHEM-4-CARBOXYLIC ACIDS

Stanley J. Schmidt, Ardmore, Pa., assignor to SmithKline Corporation, Philadelphia, Pa.
Filed Nov. 4, 1976, Ser. No. 738,774
Int. Cl.² A61K *31/345;* C07D *501/36*
U.S. Cl. 424—246 **6 Claims**

1. A chemical compound of the formula:

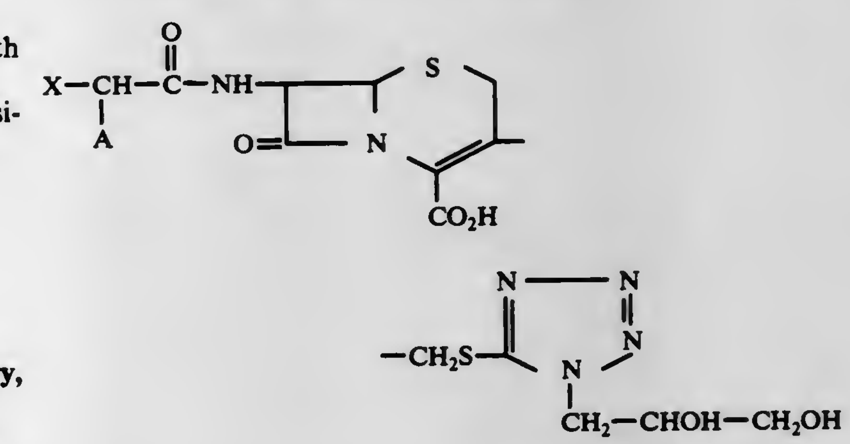

in which:
X is thienyl, furyl, phenyl or phenyl monosubstituted with hydroxy, hydroxymethyl, formamido or ureido; and
A is NH_2, OH, COOH, SO_3H, formyloxy or, when the α-C-hydrogen is absent, methoxyimino; and the nontoxic, pharmaceutically acceptable alkali metal salts of said chemical compound.

5. A antibacterial pharmaceutical composition comprising a compound as claimed in claim 1 and a pharmaceutically acceptable carrier therefor.

4,064,243

HETEROCYCLIC-SUBSTITUTED 1,3,5-OXADIAZIN-2-ONE COMPOUNDS USEFUL FOR COMBATTING COCCIDIOSIS

Roger K. Huff, Wokingham, England; Jean Jacques Gallay, Magden, and Manfred Kühne, Pfeffingen, both of Switzerland, assignors to Ciba-Geigy Corporation, Ardsley, N.Y.
Filed May 25, 1976, Ser. No. 689,884
Claims priority, application Switzerland, June 2, 1975, 7104/75; Apr. 1, 1976, 4065/76
Int. Cl.² A01N *9/00, 9/22;* C07D *265/00, 273/00;* A61K *31/535*
U.S. Cl. 424—248.5 **7 Claims**

1. A compound of the formula

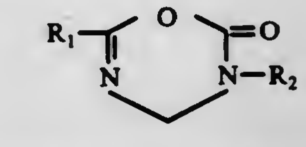

in which R_1 denotes a heterocyclic-aromatic radical selected from the group consisting of pyrazinyl, pyrrolyl, thiazolyl, imidazolyl, pyrimidinyl, furyl, thienyl, pyridinyl, quinolyl,

indolyl, benzofuranyl and the quaternary ammonium salts and N-oxides of the N-containing heterocycles, which is optionally substituted by halogen, lower alkyl, aryl, nitro, cyano, trifluoromethyl, carboxyl, R_3OOC—, $(R_3)_2NCO$—, $(R_3)_2N$—, R_3O—, R_3SO_2—, R_3SO— or R_3S—, and R_2 and R_3 independently of one another denote lower alkyl, alkoxyalkyl, alkenyl or cycloalkyl which is optionally bonded via a methylene or ethylene bridge.

4. A coccidiostatic composition which comprises an effective coccidiostatic amount of a compound of claim 1 and a suitable carrier therefor.

4,064,244
ORGANIC COMPOUNDS
Dieter Sorg, Bern, Switzerland, assignor to Sandoz Ltd., Basel, Switzerland
Continuation of Ser. No. 437,348, Jan. 28, 1974, abandoned. This application June 18, 1975, Ser. No. 588,002
Claims priority, application Switzerland, Feb. 2, 1973, 1563/73
Int. Cl.² C07D *417/04;* **A61K** *31/495*
U.S. Cl. 424—250 **41 Claims**

1. A compound of the formula

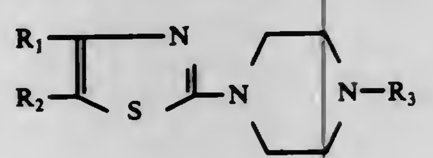

where
R_1 is t-butyl or cycloalkyl of 3 to 8 carbon atoms,
R_2 is hydrogen or alkyl of 1 to 4 carbon atoms,
and
R_3 is benzyl, alkoxyalkyl or alkoxycarbonyl having at most 6 carbon atoms in the aggregate thereof, or alkyl, alkenyl, alkanoyl or hydroxyalkyl having at most 4 carbon atoms, or alkanoyloxy alkyl having at most 8 carbon atoms in the aggregate thereof
or a pharmaceutically acceptable acid addition salt thereof.

4,064,245
N-PHENOXYPHENYL-PIPERAZINES
Laszlo Beregi, Boulogne; Pierre Hugon, Rueil-Malmison; Jacques Duhault, Chatou, and Michelle Boulanger, Marly-le-Roi, all of France, assignors to Science Union et Cie, Societe Francaise de Recherche Medicale, Suresnes, France
Filed July 14, 1976, Ser. No. 705,330
Claims priority, application United Kingdom, July 21, 1975, 30392/75
Int. Cl.² C07D *295/08;* **A61K** *31/495*
U.S. Cl. 424—250 **8 Claims**

1. A compound of the formula

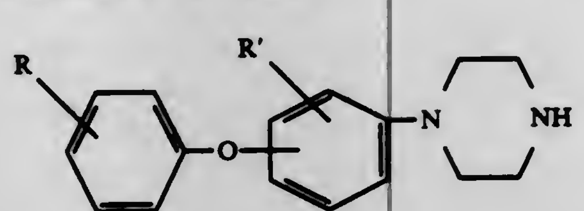

wherein R and R', which are the same or different, are each selected from the group consisting of hydrogen, halogen, alkyl, alkoxy and alkylthio each having from 1 to 5 carbon atoms inclusive, nitro, trifluoromethyl, trifluoromethylthio, trifluoromethoxy, alkoxycarbonyl wherein alkoxy has from 1 to 5 carbon atoms inclusive and dimethylsulfamoyl; or physiologically tolerable acid addition salts thereof.

8. A method for treating a living animal body afflicted with lipid-metabolism disorders, comprising the step of administering an amount of a compound of claim 1 which is effective for the alleviation of the said conditions.

4,064,246
HYDROXYMETHYL-SUBSTITUTED-2(1H)-QUINAZOLINONES
Eugene A. Papp, Parsippany, N.J., assignor to Sandoz, Inc., E. Hanover, N.J.
Filed Oct. 12, 1976, Ser. No. 731,336
Int. Cl.² C07D *239/82;* **A61K** *31/505*
U.S. Cl. 424—251 **16 Claims**

1. A compound of the formula

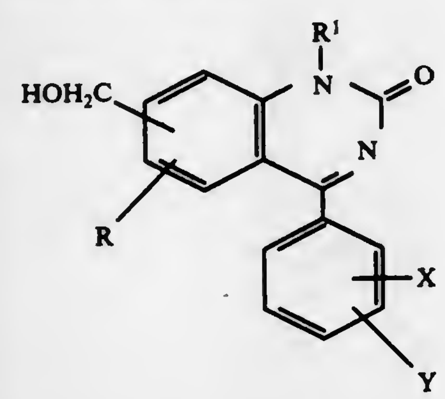

wherein
R^1 is alkyl having from 1 to 6 carbon atoms or cycloalkylalkyl of from 4 to 8 carbon atoms in which the cycloalkyl portion has from 3 to 6 carbon atoms and the alkyl portion has 1 or 2 carbon atoms;
R is a hydrogen atom, fluoro or chloro;
X is a hydrogen atom, fluoro, chloro, bromo, alkoxy having from 1 to 4 carbon atoms, or hydroxy; and
Y is a hydrogen atom, fluoro, chloro or alkoxy having from 1 to 4 carbon atoms.

14. A method of treating inflammation in a mammal in need of such treatment, comprising administering to said mammal an amount of a compound of claim 1 effective in treating said inflammation.

4,064,247
THIAZOLO[3,4-B]ISOQUINOLINE DERIVATIVES AND PHARMACEUTICAL COMPOSITIONS CONTAINING THEM
Daniel Farge, Thiais; Alain Jossin, Saint Cloud; Gérard Ponsinet, Sucy-En-Brie, and Daniel Reisdorf, Thiais, all of France, assignors to Rhone-Poulenc Industries, Paris, France
Filed Aug. 5, 1976, Ser. No. 711,963
Claims priority, application France, Aug. 6, 1975, 75.24523; May 18, 1976, 76.14935
Int. Cl.² C07D *513/14;* **A61K** *31/47*
U.S. Cl. 424—258 **18 Claims**

1. A thiazolo[3,4-b]isoquinoline derivative of the general formula:

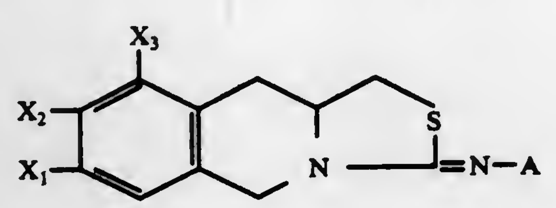

wherein A represents 3-pyridyl, 4-pyridyl or 5-isoquinolyl and, when A represents 3-pyridyl, X_1 represents hydrogen, halogen, dimethylamino or cyano, X_2 represents hydrogen or fluorine and X_3 represents hydrogen or nitro, at least two of X_1, X_2 and X_3 representing hydrogen, or X_1 and X_2 together represent methylenedioxy and X_3 represents hydrogen, and when A represents 4-pyridyl or 5-isoquinolyl, X_1, X_2 and X_3 each represent hydrogen and its nontoxic pharmaceutically acceptable acid addition salts.

18. A pharmaceutical composition useful as an analgesic, antipyretic or anti-inflammatory which comprises as active ingredient an effective amount of a thiazolo[3,4-b]isoquinoline derivative of the general formula depicted in claim 1, wherein

A, X_1, X_2 and X_3 are as defined in claim 1, or a non-toxic pharmaceutically acceptable acid addition salt thereof, in association with a significant amount of a pharmaceutically acceptable carrier.

4,064,248
DOSAGE REGIMEN
Herbert G. Johnson, Kalamazoo, Mich., assignor to The Upjohn Company, Kalamazoo, Mich.
Continuation-in-part of Ser. No. 278,292, Aug. 7, 1972, abandoned. This application Feb. 4, 1974, Ser. No. 439,434
The portion of the term of this patent subsequent to Feb. 18, 1992, has been disclaimed.
Int. Cl.² A61K *31/47*
U.S. Cl. 424—258 **4 Claims**

1. A process for treating asthma comprising the administration to a human of a priming dose of a pharmacologically acceptable salt or ester of a compound of the formula:

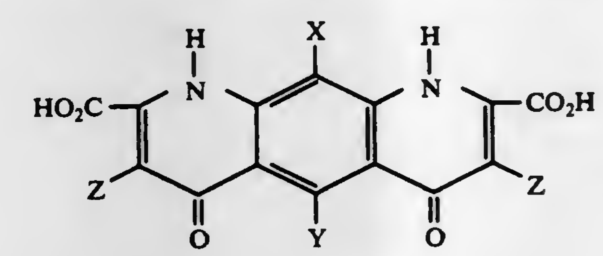

wherein X and Y can be the same or different and are selected from the group consisting of hydrogen, alkyl of from one to six carbon atoms, inclusive, cycloalkyl of five or six carbon atoms, inclusive, phenyl, hydroxyl, alkoxy having from one to three carbon atoms, inclusive, halogen, trifluoromethyl, cyano, carboxyamide and —CO_2H; Z is selected from the group consisting of hydrogen, alkyl from one to three carbon atoms, inclusive, and phenyl and provided when X is chloro at least one of Y and Z are other than hydrogen followed by the administration of a smaller maintenance dose consisting of 1/5th to 1/1000th the priming dose, said maintenance dose being repeated every 4 to 12 hours.

4,064,249
COMPOUNDS WITH ERGOLINE SKELETON
Erzsebet Mago nee Karacsony; Jozsef Borsi; Endre Csanyi; Katalin Pik, and Lajos Wolf, all of Budapest, Hungary, assignors to Richter Gedeon Vegyeszeti Gyar Rt., Budapest, Hungary
Division of Ser. No. 579,979, May 22, 1975, Pat. No. 4,005,089. This application Dec. 10, 1976, Ser. No. 749,398
Claims priority, application Hungary, May 28, 1974, GO 1272
Int. Cl.² C07D *457/06;* **A61K** *31/48*
U.S. Cl. 424—261 **5 Claims**

1. A compound of the formula

(I)

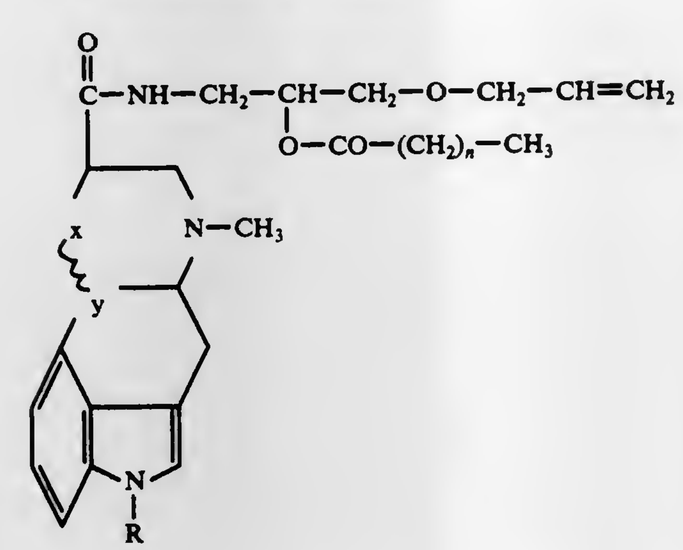

wherein R is hydrogen or methyl group, x⌢y is a group of the formula

$$—CH{=}\overset{|}{C}— \quad \text{or} \quad —CH_2—\overset{|}{C}H—,$$

and *n* is an integer of from 4 to 10, or a pharmaceutically acceptable acid addition salt thereof.

4. A pharmaceutical composition having prolonged antidepressant effect, containing as active ingredient a compound as in claim 1, together with a pharmaceutically acceptable carrier, diluent and/or auxiliary agent.

4,064,250
INSECTICIDAL BENZODIOXOL-4-YL CARBAMATES AND INTERMEDIATES THEREOF
Peter Stuart Gates, Cambridge, England, assignor to Fisons Limited, England
Filed Apr. 16, 1976, Ser. No. 677,845
Claims priority, application United Kingdom, May 2, 1975, 18341/75
Int. Cl.² A01N *9/28;* **C07D** *317/46*
U.S. Cl. 424—282 **12 Claims**

1. The benzodioxol-4-yl carbamates of the formula

(I)

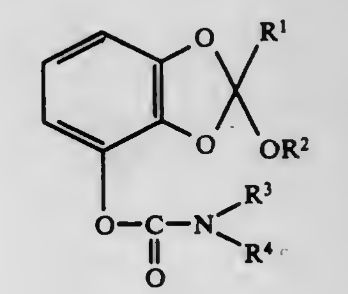

wherein R^1 represents hydrogen, an alkyl group of 1 to 6 carbon atoms which may be unsubstituted or substituted by halogen, alkylthio or by alkoxy, a phenyl group which may be unsubstituted or substituted by haloen, alkoxy or by alkyl, or a group —OR^2 where R^2 is as defined hereinafter;
R^2 represents an alkyl group of 1 to 6 carbon atoms which may be unsubstituted or substituted by halogen or by alkoxy;
R^3 represents hydrogen or an alkyl, alkenyl or alkynyl group of not more than 4 carbon atoms which may be unsubstituted or substituted by halogen or by alkoxy, or an alkanoyl group of 2 to 10 carbon atoms; and
R^4 represents an alkyl, alkenyl or alkynyl group of not more than 4 carbon atoms which may be unsubstituted or substituted by halogen or by alkoxy.

8. A method of combating insects which comprises applying to a locus either infested with or liable to infestation by said insects an insecticidally-effective amount of one or more benzodioxol-4-yl carbamates as claimed in claim 1.

4,064,251
SUBSTITUTED HYDROXY PYRIDONES
Jeffrey Nadelson, Lake Parsippany, N.J., assignor to Sandoz, Inc., E. Hanover, N.J.
Filed June 25, 1976, Ser. No. 700,065
Int. Cl.² C07D *213/44;* **A61K** *31/44*
U.S. Cl. 424—263 **5 Claims**

1. A compound of the formula

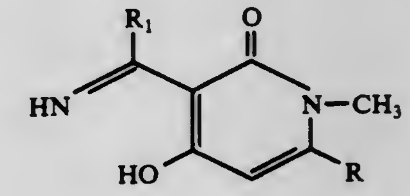

where
R is

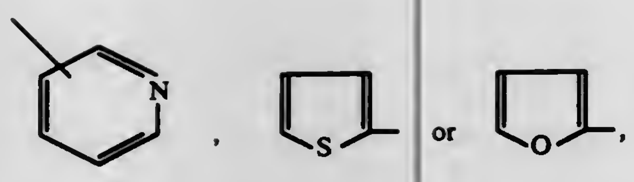

and

where R_1 is straight chain lower alkyl,

or a pharmaceutically acceptable salt thereof.

4. A method of treating muscle spasms which comprises administering to a mammal in need of said treatment a muscle-relaxant effective amount of a compound according to claim 1.

4,064,252

SUBSTITUTED N-(CARBOXYMETHYL)-3-AMINOPROPAN-2-OL DERIVATIVES

Hiromu Murai; Katsuya Ohata; Hiroshi Enomoto; Shoichi Chokai; Mitsuhiro Maehara; Katsuhide Saito, and Takayuki Ozaki, all of Kyoto, Japan, assignors to Nippon Shinyaku Co., Ltd., Japan

Filed June 4, 1976, Ser. No. 692,878

Claims priority, application Japan, June 17, 1975, 50-74014; June 17, 1975, 50-74015

Int. Cl.² A61K *31/455;* **C07D** *213/55, 213/56*

U.S. Cl. 424—266 **9 Claims**

1. A compound of the formula:

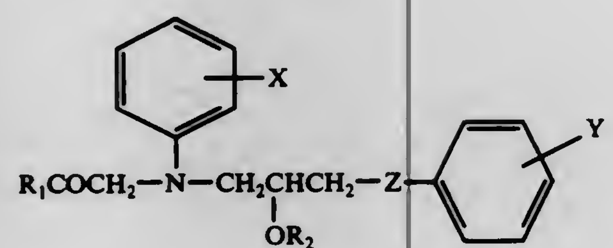

wherein

Z is oxygen or sulfur;

X is hydrogen, halogeno, lower alkyl, lower alkoxy, carboxy, carbo(lower alkoxy) or carbamoyl;

Y, when Z is sulfur, is hydrogen, halogeno or lower alkyl, or, when Z is oxygen, hydrogen, halogeno, lower alkyl, lower alkoxy, hydroxy, carboxy, or carbo(lower alkoxy);

R_1 is hydroxy or lower alkoxy, unsubstituted or substituted by hydroxy or lower alkoxy; and

R_2 is nicotinoyl,

and the pharmaceutically acceptable salts thereof.

9. A method of reducing serum cholesterol and triglycerides, which comprises administering to an animal or human in need thereof a serum cholesterol- and triglyceride-reducing amount of the compound of claim 1.

4,064,253

METHOD OF SUPPRESSING SNORING

Teng Hian Khoe, Thomsonlaan 80A, Hague, Netherlands

Continuation of Ser. No. 638,054, Dec. 5, 1975, abandoned, which is a continuation of Ser. No. 512,610, Oct. 7, 1974, abandoned. This application Oct. 5, 1976, Ser. No. 729,676

Claims priority, application Netherlands, Oct. 10, 1973, 7313964

Int. Cl.² A61K *31/455*

U.S. Cl. 424—266 **4 Claims**

1. A method for suppressing snoring in a human host in need thereof comprising orally administering to the palate of said host a snore-suppressively effective amount of arecoline or a pharmaceutically acceptable salt thereof.

4,064,254

SUBSTITUTED PIPERIDINES THERAPEUTIC PROCESS AND COMPOSITIONS

Stanley J. Dykstra, and Joseph L. Minielli, both of Evansville, Ind., assignors to Mead Johnson & Company, Evansville, Ind. Division of Ser. No. 620,907, Oct. 8, 1975, Pat. No. 4,000,143, which is a division of Ser. No. 384,341, July 31, 1973, Pat. No. 3,931,195, which is a continuation-in-part of Ser. No. 120,754, March 3, 1971, abandoned. This application Oct. 21, 1976, Ser. No. 734,583

Int. Cl.² A61K *31/445, 31/455*

U.S. Cl. 424—267 **20 Claims**

1. A process for eliciting an antiarrhythmic effect in a mammal in need of said effect which comprises systemic administration to said mammal of a non-toxic effective antiarrhythmic dose of from about 0.01 to 20 mg./kg. of body weight of said mammal of a compound from the group consisting of a substituted piperidine having Formula I

Formula I

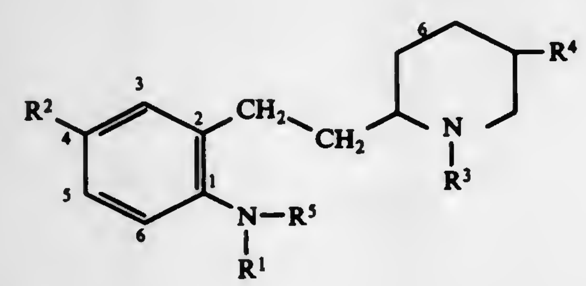

wherein

R^1 represents hydrogen

R^2 represents hydrogen or methylenedioxy attached in the benzenoid 4,5-position

R^3 represents hydrogen or methyl

R^4 represents hydrogen

R^5 is selected from the group consisting of lower alkanoyl of from 1 to 4 carbon atoms inclusive, lower alkanesulfonyl of from 1 to 4 carbon atoms inclusive, cinnamoyl,

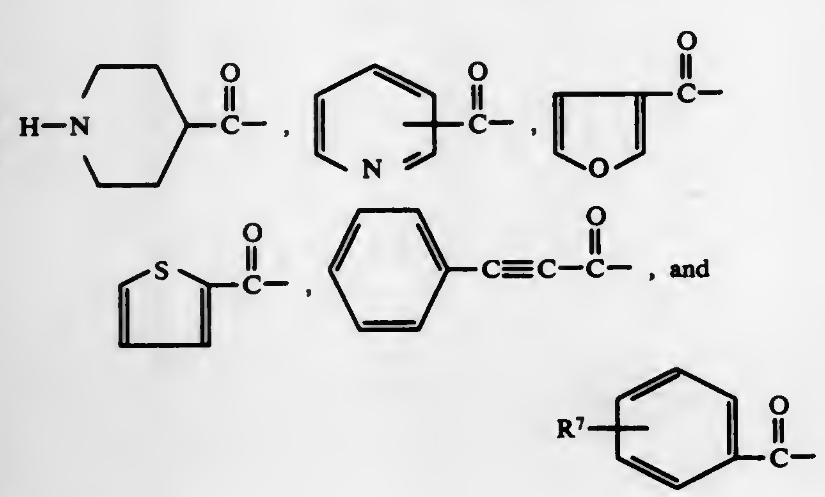

wherein

R^7 is selected from the group consisting of hydrogen, chlorine, dimethylamino, alkylthio of from 1 to 4 carbon atoms inclusive, alkyl of from 1 to 4 carbon atoms inclusive, methoxy, 3,4-dimethoxy, 3,5-dimethoxy, and 3,4,5-trimethoxy;

and a pharmaceutically acceptable salt thereof.

4,064,255

COMPOSITIONS CONTAINING NEW INDOLE DERIVATIVES AND THEIR USE IN PHARMACOLOGY

Alain André Champseix, Forges les Bains Limours; Claude Georges Alexandre Gueremy, Houilles, and Gerard Roger Le Fur, Villeneuve la Garenne, all of France, assignors to Mar-Pha Societe d'Etudes et d'Exploitation de Marques, Paris, France

Filed Apr. 26, 1976, Ser. No. 679,970

Claims priority, application France, Dec. 12, 1975, 75.38051

Int. Cl.² A61K *31/445*

U.S. Cl. 424—267 **33 Claims**

1. A method of treating a mammal afflicted with depression comprising administering to said mammal a therapeutically effective amount of a composition comprising a compound of the formula

(I)

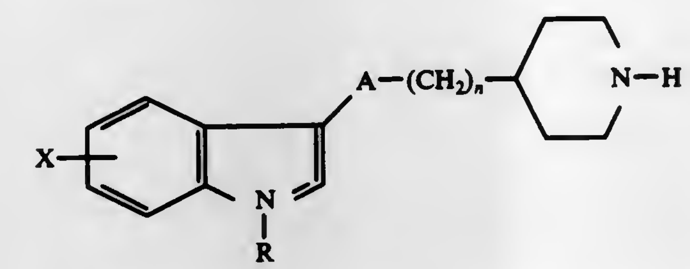

where R is hydrogen, an alkyl group having 1 to 4 carbon atoms or an aralkyl group of which the alkyl contains 1 or 2 carbon atoms; X is hydrogen, alkyl, alkoxy or alkylthio, the alkyl of each containing from 1 to 4 carbon atoms, or a halogen atom; A is —CO— or —CH_2—; and n is 1 to 2; and pharmaceutically acceptable salts thereof; in a pharmaceutically acceptable carrier therefor.

4,064,256

BENZOPYRANYLTETRAZOLES AS ANTIASTHMA AGENTS

Joachim Augstein, Linford; Hugh Cairns, Loughborough; Dennis Hunter, Loughborough, and John King, Loughborough, all of England, assignors to Fisons Limited, England

Division of Ser. No. 175,392, Aug. 26, 1971, Pat. No. 3,933,845. This application Jan. 3, 1975, Ser. No. 539,437

Claims priority, application United Kingdom, Aug. 26, 1970, 41009/70; Jan. 13, 1971, 1642/71; July 1, 1971, 30827/71

Int. Cl.² A61K *31/41*

U.S. Cl. 424—269 **4 Claims**

1. A pharmaceutical composition comprising: 5-(5-hydroxy-4-oxo-4H-1-benzopyran-2-yl)tetrazole or a pharmaceutically acceptable salt thereof as active ingredient, in combination with a pharmaceutically acceptable adjuvant, diluent or carrier.

3. A pharmaceutical composition comprising: 5[6,8-di-t-butyl-4-oxo-4H-1-benzopyran-2-yl]tetrazole or a pharmaceutically acceptable salt thereof as active ingredient, in combination with a pharmaceutically acceptable adjuvant, diluent or carrier.

4,064,257

THIAZOLE CARDIOVASCULAR AGENTS

Belig M. Berkoz, Los Altos; Brian Lewis, Mountain View, and Stefan H. Unger, Palo Alto, all of Calif., assignors to Syntex (U.S.A.) Inc., Palo Alto, Calif.

Filed July 19, 1976, Ser. No. 706,341

Int. Cl.² C07D *277/56;* **A61K** *31/425*

U.S. Cl. 424—270 **43 Claims**

1. A compound selected from the group having the formula:

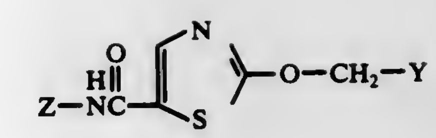

wherein

Z has the formula:

$R^1—C≡C—(CH_2)_n—$

wherein n is 2, 3 or 4; R^1 is hydrogen or an alkyl group having from one through four carbon atoms; and wherein Z has from four through eight carbon atoms;

Y is selected from the group having the formulas:

$—CHOH—CH_2NHR^2$; or

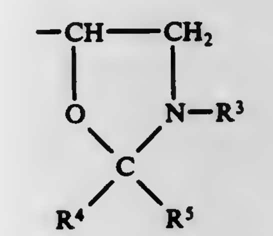

wherein R^2 and R^3 are lower alkyl and R^4 and R^5 are independently selected from the group of hydrogen or lower alkyl;

and pharmaceutically acceptable salts thereof.

38. A pharmaceutical composition, for treating cardiovascular disorders in mammals by blocking β-adrenergic receptor sites, consisting essentially of a pharmaceutically acceptable carrier and an amount effective to block β-adrenergic receptor sites on an agent selected from the group of the compounds of claim 1 and mixtures thereof.

4,064,258

THIAZOLE CARDIOVASCULAR AGENTS

Brian Lewis, Mountain View; Stefan H. Unger, Palo Alto, and Karl G. Untch, Los Altos, all of Calif., assignors to Syntex (U.S.A.) Inc., Palo Alto, Calif.

Filed July 19, 1976, Ser. No. 706,342

Int. Cl.² C07D *277/56;* **A61K** *31/425*

U.S. Cl. 424—270 **83 Claims**

1. A compound selected from the group having the formula:

(I)

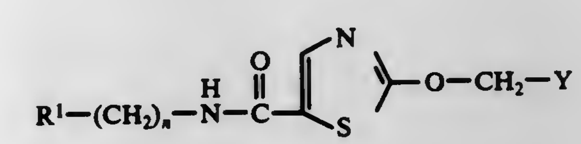

wherein

n is 2, 3, or 4; R^1 is a carbocycle selected from the group consisting of bicyclo[3.1.0]hexyl; bicyclo[2.2.1]heptyl; adamantyl; and 4-methylbicyclo-[2.2.2]oct-1-yl and wherein attachment to the $(CH_2)_n$ linking group can be at any ring atom of the bicyclo [3.1.0]hexyl; bicyclo[2.2.1]-heptyl and adamantyl groups and is at the 1-position of the bicyclo[2.2.2]octyl group; and

Y is selected from the group having the formula:

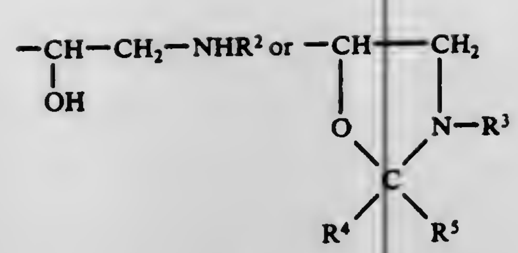

wherein R^2 and R^3 are lower alkyl and R^4 and R^5 are independently selected from the group of hydrogen or lower alkyl;
and pharmaceutically acceptable salts thereof.

78. A pharmaceutical composition, for treating cardiovascular disorders in mammals by blocking β-adrenergic receptor sites, consisting essentially of a pharmaceutically acceptable carrier and an amount, effective to block β-adrenergic receptor sites, of an agent selected from the group of compounds of claim 1 and mixtures thereof.

4,064,259

THIAZOLE CARDIOVASCULAR AGENTS

Belig M. Berkoz, Los Altos; Brian Lewis, Mountain View, and Stefan H. Unger, Palo Alto, all of Calif., assignors to Syntex (U.S.A.) Inc., Palo Alto, Calif.

Filed July 19, 1976, Ser. No. 706,413

Int. Cl.² A61K *31/425;* **C07D** *277/56*

U.S. Cl. 424—270 **36 Claims**

1. A compound selected from the group having the formula:

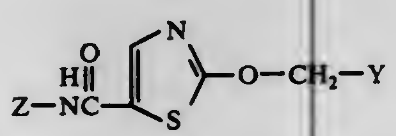

wherein Z has the formula:

$R^1CH{=}CH(CH_2)_n{-}$

wherein n is 2, 3 or 4; R^1 is hydrogen or an alkyl group having from one through four carbon atoms and wherein Z has from four through eight carbon atoms;
Y is selected from the group having the formulas:

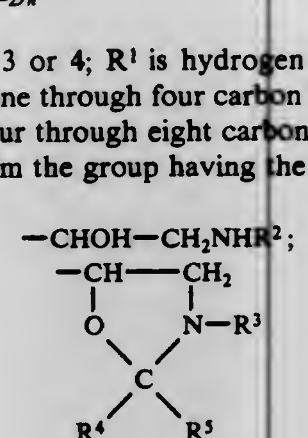

wherein R^2 and R^3 are lower alkyl and R^4 and R^5 are independently selected from the group of hydrogen or lower alkyl;
and pharmaceutically acceptable salts thereof.

31. A pharmaceutical composition, for treating cardiovascular disorders in mammals by blocking β-adrenergic receptor sites, consisting essentially of a pharmaceutically acceptable carrier and an amount effective to block β-adrenergic receptor sites of an agent selected from the group of the compounds of claim 1 and mixtures thereof.

4,064,260

ANTI-INFLAMMATORY DIARYLIMIDAZOTHIAZOLES AND THEIR CORRESPONDING S-OXIDES

Saul Carl Cherkofsky, and Thomas Ray Sharpe, both of Wilmington, Del., assignors to E. I. Du Pont de Nemours and Company, Wilmington, Del.

Filed July 29, 1976, Ser. No. 709,819

Int. Cl.² C07D *513/04*

U.S. Cl. 424—270 **21 Claims**

1. A compound of the formula:

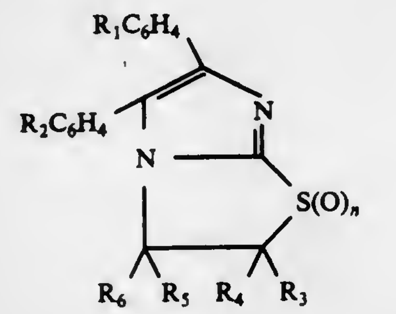

where
n = 0, 1, or 2;
R_1 and R_2, alike or different, = C_1–C_4 alkoxy;
R_3, R_4 and R_6 = H or F; and R_5 = H.

8. An anti-inflammatory composition consisting essentially of a pharmaceutically suitable carrier and an effective anti-inflammatory amount of a compound of claim 1.

15. A method of alleviating inflammation in a mammal which comprises administering to the mammal an effective anti-inflammatory amount of a compound of claim 1.

4,064,261

AGENT FOR THE CONTROL OF PLANT-PATHOGENIC ORGANISMS

Charles J. Paget, Indianapolis, Ind., assignor to Eli Lilly and Company, Indianapolis, Ind.

Continuation of Ser. No. 296,380, Oct. 10, 1972, abandoned, which is a continuation-in-part of Ser. No. 243,838, April 13, 1972, abandoned, which is a continuation-in-part of Ser. No. 188,546, Oct. 12, 1971, abandoned. This application Mar. 10, 1975, Ser. No. 556,767

Int. Cl.² A01N *9/12, 9/22;* **C07D** *277/82*

U.S. Cl. 424—270 **18 Claims**

1. A method for protecting a plant against attack by a plant-pathogenic bacterial or fungal organism which comprises applying to a locus of the organism an effective amount of an active agent selected from the group consisting of the compounds of the formula

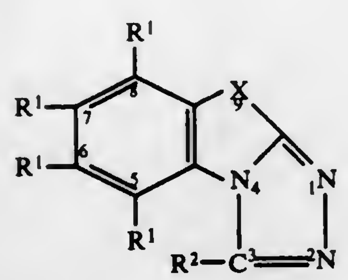

and the phytologically acceptable acid addition salts thereof, wherein
X represents —O—, —S—,

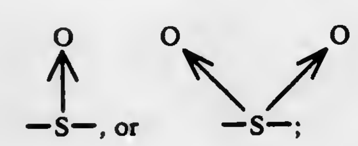

each R^1 independently represents hydrogen, halo, lower alkyl of C_1–C_3, lower alkoxy of C_1–C_3, or lower alkylthio of C_1–C_3;
R^2 represents hydrogen, alkyl of C_1–C_{11}, cyclopropyl, hydroxy, lower alkoxy of C_1–C_3, mercapto, lower alkylthio of C_1–C_3, allylthio, propynylthio, benzylthio, halo, amino, (lower alkyl of C_1–C_3)amino, di(lower alkyl of C_1–C_3)amino, carbamoyl, thiocyanato, acetamido, trifluoromethyl, halomethyl, mono- or di(lower alkyl of C_1–C_3)aminomethyl, or radical of the formula

$$-\overset{O}{\overset{\|}{C}}-O-R^3$$

wherein R^3 represents sodium, potassium, or lower alkyl of C_1–C_3;
subject to the limitations (1) that at least two R^1's, or at least one R^1 and R^2, represent hydrogen, and (2) that when both R^2 and the R^1 substituent at the 5-position represent groups other than hydrogen, such groups together do not contain more than six carbon atoms.

16. 5-Chloro-s-triazolo(3,4-b)benzothiazole.

4,064,262

S-METHYL 3-FURFURYLIDENE-2-METHYL-DITHIOCARBAZATE AND ITS USE AS A FUNGICIDE

Alexander Serban, Doncaster; Richard Burridge Warner, Ringwood, and Keith Thomas Alcock, Boronia, all of Australia, assignors to ICI Australia Limited, Melbourne, Australia

Filed Apr. 5, 1976, Ser. No. 673,544

Int. Cl.² A01N *9/28;* **C07D** *307/34*

U.S. Cl. 424—285 **8 Claims**

1. S-methyl 3-furfurylidene-2-methyl-dithiocarbazate.

3. A method of treating seeds comprising applying to the seeds prior to sowing a fungicidally effective amount of a seed dressing comprising S-methyl 3-furfurylidene-2-methyl-dithiocarbazate.

4,064,263

4,5-BENZOSPIRO(2,4)-HEPTANE (AND HEPTA-4,6-DIENE)-1-CARBOXYLIC ACID ESTERS AND COMPOSITIONS CONTAINING SAME

Saleem Farooq, Aesch; Jozef Drabek, Allschwil; Laurenz Gsell, Fullinsdorf; Friedrich Karrer, Zofingen, and Willy Meyer, Riehen, all of Switzerland, assignors to Ciba-Geigy Corporation, Ardsley, N.Y.

Filed Sept. 16, 1976, Ser. No. 723,682

Claims priority, application Switzerland, Sept. 26, 1975, 12565/75; July 23, 1976, 9465/76

Int. Cl.² A01N *9/28*

U.S. Cl. 424—285 **5 Claims**

1. A compound of formula I

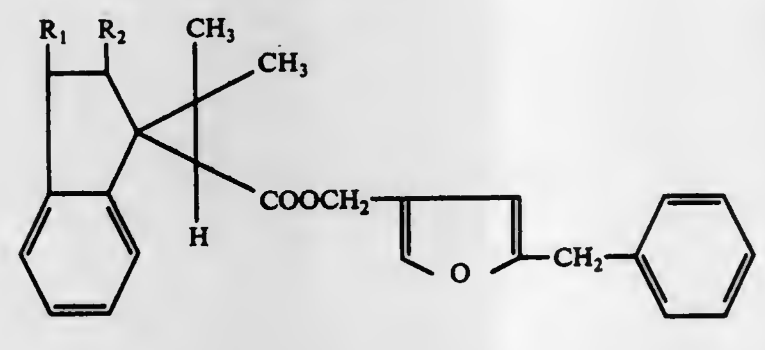
(I)

wherein
R_1 and R_2 are each a hydrogen atom, or together are a carbon-carbon bond.

4. An insecticidal and acaricidal composition comprising an insecticidally and acaricidally effective amount of a compound of the formula of claim 1, together with a suitable carrier therefor.

4,064,264

PYRROLIDONECARBOXYLIC ACID DERIVATIVES AS ANTI-ULCER AGENTS

Albin J. Nelson, Ledyard, Conn., assignor to Pfizer Inc., New York, N.Y.

Filed Jan. 7, 1976, Ser. No. 647,132

Int. Cl.² A61K *31/44, 31/40;* **C07D** *207/24, 211/00*

U.S. Cl. 424—274 **6 Claims**

1. A method for combatting peptic ulcers in the treatment of a subject afflicted with said condition, which comprises administering to said subject a therapeutically-effective amount of a compound selected from the group consisting of an N-(p-benzamido)-2-pyrrolidone-4-carboxylic acid of the formula:

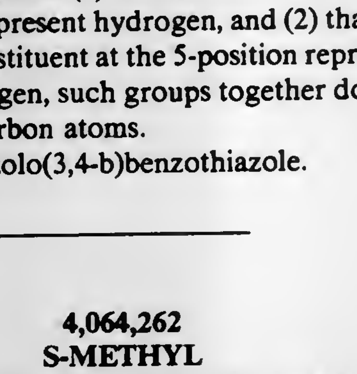

a lower alkyl ester or the unsubstituted amide derivative thereof, and a base salt of said acid with a pharmacologically acceptable cation, wherein R is a member selected from the group consisting of alkyl having from seven to eighteen carbon atoms arranged in a straight chain, benzyl and β-phenylethyl.

4,064,265

DITHIOCARBAMIC ACID ESTERS

Denis V. Varsanyi, Rheinfelden; Ernst Aufderhaar, Kaiseraugst, and Ernst Schweizer, Arlesheim, all of Switzerland, assignors to Ciba-Geigy Corporation, Ardsley, N.Y.

Filed June 23, 1976, Ser. No. 699,015

Claims priority, application Switzerland, July 3, 1975, 8673/75

Int. Cl.² A61K *31/27, 31/275;* **C07C** *153/00*

U.S. Cl. 424—300 **22 Claims**

1. A dithiocarbamic acid ester of the formula

$$R_1-NH-\overset{S}{\overset{\|}{C}}-S-alk-COOR_2 \quad (I)$$

wherein R_1 represents a phenyloxyphenyl or phenylaminophenyl radical which is unsubstituted or substituted by lower alkyl, halogen, trifluoromethyl, nitro or cyano, R_2 represents hydrogen or lower alkyl, and alk represents lower alkylidene or lower alkylene, and the salts of a compound of the formula I, wherein R_2 represents hydrogen, with pharmaceutically acceptable bases.

18. A pharmaceutical preparation for the treatment of warm-blooded animals infected with parasitic helminths comprising an anti-helminthically effective amount of a compound according to claim 1 having the formula

$$R_1-NH-\overset{S}{\overset{\|}{C}}-S-alk-COOR_2 \quad (I)$$

wherein R_1 represents a phenyloxyphenyl or phenylaminophenyl radical which is unsubstituted or substituted by lower alkyl, halogen, trifluoromethyl, nitro or cyano, R_2 represents hydrogen or lower alkyl, and alk represents lower alkylidene or lower alkylene, or of a salt of a compound of the formula I, wherein R_2 represents hydrogen, with a pharmaceutically acceptable base, in aqueous suspension or in admixture with a solid pharmaceutical carrier.

4,064,266

COMPOSITIONS FOR KILLING INTERNAL PARASITES CONTAINING 3-TERT-ALKYL-4-HYDROXY-5-HALO-BENZYLIDENE-MALONITRILES

George Richard Birchall, Kew; Donald William Gerald Harney, Doncaster, and Bruce Adam Forsyth, Croydon, all of Australia, assignors to ICI Australia Limited, Melbourne, Australia

Filed Sept. 7, 1976, Ser. No. 720,660

Claims priority, application Australia, Sept. 29, 1975, 3378/75

Int. Cl.² A61K *31/275;* **C07C** *121/75*

U.S. Cl. 424—304 **16 Claims**

1. A compound of the formula

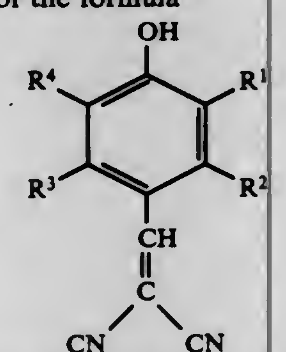

wherein R^1 is halogen, R^4 is an alkyl wherein the carbon atom directly attached to the aromatic ring is substituted with three alkyl groups, R^2 and R^3 which may be the same or different are hydrogen, halogen or lower alkyl, or a salt of such compound with non-toxic base.

12. A method of treating warm blooded animals to eradicate certain internal parasites, which method comprising administering to the said warm blooded animal a therapeutic dose of a composition comprising as active ingredient a compound according to claim 1.

4,064,267

2',3,6'-TRICHLORO-4-CYANO-4'-[N-(N'-(O-SUBSTITUTED-BENZOYL))-UREIDO]-DIPHENYL ETHER INSECTICIDES

Wilhelm Sirrenberg, Sprockhoevel; Jurgen Schramm, Dormagen; Erich Klauke, Odenthal; Ingeborg Hammann, Cologne, and Wilhelm Stendel, Wuppertal, all of Germany, assignors to Bayer Aktiengesellschaft, Leverkusen, Germany

Filed July 12, 1976, Ser. No. 704,708

Claims priority, application Germany, July 16, 1975, 2531743

Int. Cl.² A01N *9/20;* **C07C** *121/78*

U.S. Cl. 424—304 **8 Claims**

1. A 2',3,6'-trichloro-4-cyano-4'-[N-(N'-(o-substituted-benzoyl))-ureido]-diphenyl ether of the formula

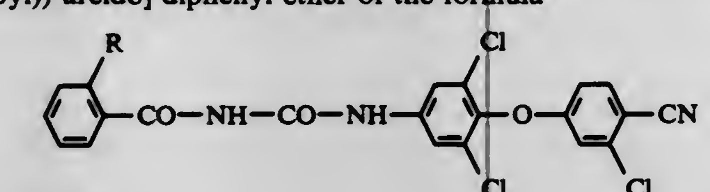

in which

R is chlorine, fluorine, bromine or methyl.

6. An insecticidal composition containing as active ingredient an insecticidally effective amount of a compound according to claim 1 in admixture with a diluent.

4,064,268

HALOBENZOYLPROPIONATE AND N,N-DIETHYL-M-TOLUAMIDE AS INSECT REPELLENTS

Heinrich Adolphi, Limburgerhof, and Gerhard Bachmann, Frankenthal, both of Germany, assignors to BASF Aktiengesellschaft, Ludwigshafen (Rhine), Germany

Filed June 18, 1976, Ser. No. 697,438

Claims priority, application Germany, July 5, 1975, 2530070

Int. Cl.² A01N *9/20, 9/24*

U.S. Cl. 424—308 **2 Claims**

1. A repellent composition adapted for use against insects, ticks and mites and containing the halobenzoylpropionate of the formula

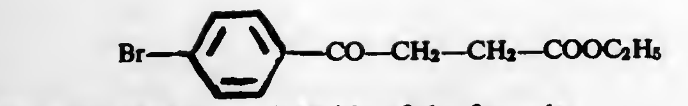

and N,N-diethyl-m-toluamide of the formula

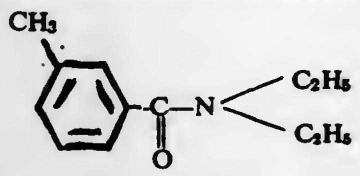

wherein the weight ratio of halobenzoylpropionate to N,N-diethyl-m-toluamide is from 3:1 to 1:3.

2. A process for repelling insects, ticks and mites which comprises treating the skin or clothing exposed to settling by insects, ticks or mites thereon with an insect-, tick- or mite-repelling amount of a repellent composition as claimed in claim 1.

4,064,269

4-[(4-PHENOXY AND BENZYL)-PHENOXY]-BUTYRIC ACID ESTERS

Friedrich Karrer, Basel, Switzerland, assignor to Ciba-Geigy Corporation, Ardsley, N.Y.

Filed Oct. 23, 1974, Ser. No. 517,331

Claims priority, application Switzerland, Oct. 25, 1973, 15044/73; Oct. 3, 1974, 13317/74

Int. Cl.² C07C *69/76*

U.S. Cl. 424—308 **11 Claims**

1. A compound of the formula

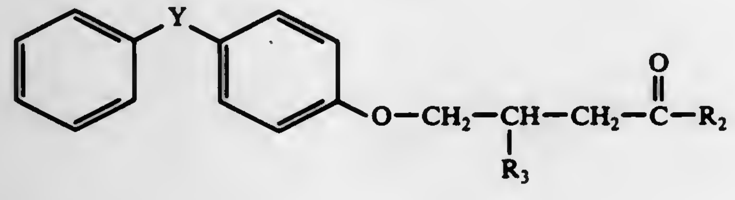

wherein

R_2 represents methoxy, ethoxy, n-propoxy, isopropoxy, n-butoxy, isobutoxy, sec.butoxy, tert.butoxy or propargyloxy,

R_3 represents hydrogen or methyl, and

Y represents methylene or oxygen.

4,064,270

N'-(AMINOACYLAMINOPHENYL) ACETAMIDINES

Hartmund Wollweber; Ekkehard Niemers; Hans Peter Schulz; Herbert Thomas, and Peter Andrews, all of Wuppertal, Germany, assignors to Bayer Aktiengesellschaft, Germany

Filed Sept. 13, 1974, Ser. No. 505,745

Claims priority, application Germany, Sept. 18, 1973, 2346937

Int. Cl.² C07D *295/00*

U.S. Cl. 424—324 **63 Claims**

1. A compound of the formula:

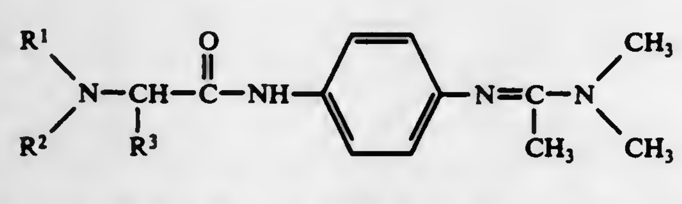

or a pharmaceutically acceptable non-toxic salt thereof wherein

R^1 and R^2 are the same or different and each is hydrogen or lower alkyl unsubstituted or substituted by lower alkoxy; and

R^3 is hydrogen, or lower alkyl unsubstituted or substituted by lower alkoxy.

4,064,271

EMETIC TETRALONES AND THE USE THEREOF FOR INDUCING REGURGITATION

John D. McDermed, Durham; Gerald M. McKenzie, and Arthur P. Phillips, both of Raleigh, all of N.C., assignors to Burroughs Wellcome Co., Research Triangle Park, N.C.

Division of Ser. No. 455,789, March 28, 1974, abandoned. This application Jan. 16, 1976, Ser. No. 649,686

Int. Cl.² A61K *31/135;* **C07C** *91/16, 91/28*

U.S. Cl. 424—330 **12 Claims**

1. A compound of formula

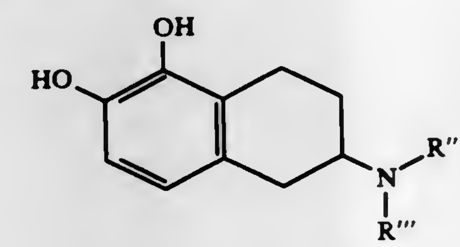

wherein R'' and R''' are the same or different and each is lower alkyl containing 2 or 3 carbon atoms or a pharmaceutically acceptable salt thereof.

5. A pharmaceutical composition for use in inducing regurgitation in mammals which comprises an effective non-toxic mammal regurgitation amount of the compound or salt of claim 1 and a pharmaceutically acceptable carrier therefore.

4,064,272

2-AMINOMETHYLENEINDANONE ANALGESIC AGENTS

Philip D. Hammen, East Lyme, and George M. Milne, Jr., Waterford, both of Conn., assignors to Pfizer Inc., New York, N.Y.

Division of Ser. No. 312,693, Dec. 6, 1972, Pat. No. 4,022,836. This application Jan. 27, 1977, Ser. No. 763,241

Int. Cl.² A61K *31/135*

U.S. Cl. 424—330 **2 Claims**

1. A method of alleviating pain comprising the administration to a pain afflicted host of a pain alleviating effective amount of a compound of the formula:

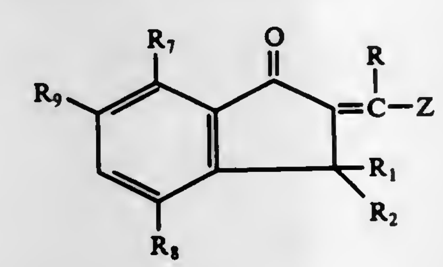

or a pharmaceutically-acceptable acid addition salt thereof, wherein R is hydrogen, lower alkyl or phenyl;

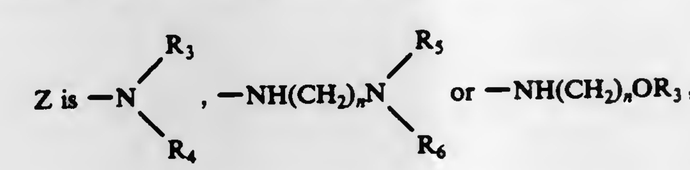

wherein R_3 and R_4 are each hydrogen or lower alkyl, R_5 and R_6 are lower alkyl and n is integer of from 1 to 5; R_1 and R_2 are hydrogen lower alkyl; R_7 and R_8 are each hydrogen, fluoro or chloro; and R_9 is hydrogen or fluoro.

4,064,273

TREATING LIPIDEMIA WITH SUBSTITUTED DIPHENYL ETHER HALIDES AND COMPOSITIONS THEREOF

Faizulla G. Kathawala, West Orange, N.J., assignor to Sandoz, Inc., E. Hanover, N.J.

Division of Ser. No. 520,361, Nov. 4, 1974, abandoned. This application Jan. 16, 1976, Ser. No. 649,715

Int. Cl.² A61K *31/085*

U.S. Cl. 424—340 **9 Claims**

1. A pharmaceutical composition in unit dosage form for treating lipidemia in mammals comprising an inert pharmaceutically acceptable carrier and from 150 to 2000 milligrams of a compound of the formula:

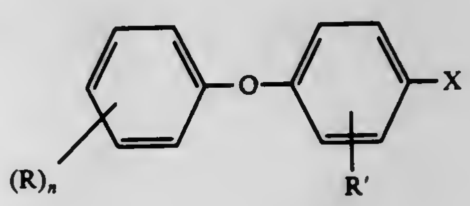

wherein

R is branched alkyl of 3 to 5 carbon atoms,

R' is hydrogen or alkyl of 1 to 4 carbon atoms,

X is halo of atomic weight of from 18 to 80, and n is 2,

with the proviso that the R groups are not in ortho position with respect to each other.

4. A method for treating lipidemia in mammals comprising administering to mammals in need of such treatment a hypolipidemic effective amount of a compound of the formula

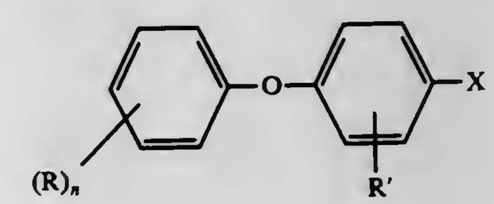

wherein R is branched alkyl of 3 to 5 carbon atoms,

R' is hydrogen or alkyl of 1 to 4 carbon atoms,

X is halo of atomic weight of from 18 to 80, and

n is 2,

with the proviso that the R groups are not in ortho position with respect to each other.

4,064,274

LONG-LASTING FLAVORED CHEWING GUM INCLUDING CHALK-FREE GUM BASE

Donald A. M. Mackay, Pleasantville; K. Warren Clark, Brewster; Frank Witzel, Spring Valley, all of N.Y., and Daniel Schoenholz, Basking Ridge, N.J., assignors to Life Savers, Inc., New York, N.Y.

Continuation-in-part of Ser. No. 654,303, Feb. 2, 1976, abandoned, and Ser. No. 654,122, Feb. 2, 1976, abandoned. This application Sept. 29, 1976, Ser. No. 727,914

Int. Cl.² A23G *3/30*

U.S. Cl. 426—3 **37 Claims**

1. A flavored chewing gum having a prolonged sweet taste comprising a substantially chalk-free gum base, and from about 0.02 to about 2.5% by weight of a particulate slowly extractable sweetener, said sweetener comprising free acid form of saccharin, free cyclamic acid or mixtures thereof, dispersed in said chalk-free gum base, said gum base containing less than 5% by weight calcium carbonate.

4,064,275
PROCESS TO HYDRATE AND ENRICH WHOLE GRAINS FOR LIVESTOCK
Wilson Brady Anthony, Auburn, Ala., assignor to Feeds and Feeding Research, Inc., Auburn, Ala.
Continuation of Ser. No. 356,475, May 2, 1973, abandoned. This application Aug. 12, 1975, Ser. No. 603,969
Int. Cl.[2] A23B *7/10*
U.S. Cl. 426—53 **7 Claims**

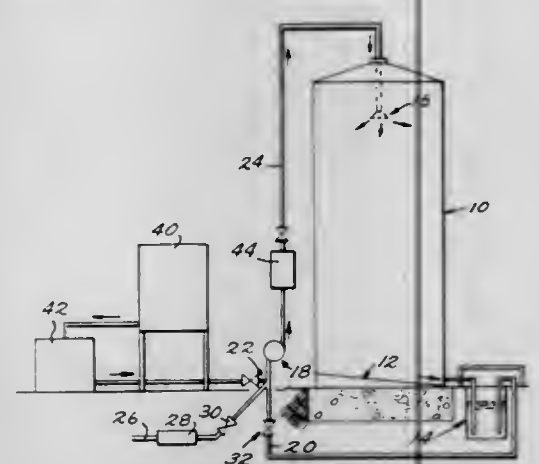

1. A process for hydrating material comprising:
placing a material consisting of dry whole grain, in a generally vertical storage facility;
feeding a liquid comprising water to the top of the storage facility and onto the storage material;
allowing the liquid to flow through the material to the bottom of the storage facility; and
recirculating the liquid from the bottom of the storage facility to the top of the storage facility until the stored material is uniformly hydrated to a desired amount.

4,064,276
PROCESS FOR THE PRODUCTION OF AMMONIATED STRAW AND OTHER PLANT MATERIALS CONTAINING LIGNOCELLULOSE
Arne Conradsen, Heistad, and Ole Hannibal Lie, Porsgrunn, both of Norway, assignors to Worsk Hydro a.s, Oslo, Norway
Filed Aug. 4, 1976, Ser. No. 711,684
Int. Cl.[2] A23K *1/22*
U.S. Cl. 426—69 **3 Claims**
1. A process for the production of ammoniated straw to increase the nutritional value of the material said process comprising:
forming masses of compressed straw having a dry matter content of at least 60% by weight into a pile;
covering the top, bottom and sides of said pile with plastic foil;
adding 15–40 kg of anhydrous ammonia per ton of dry straw while allowing entrapped air to escape through a temporary opening in said foil;
and thereafter closing said opening and leaving the covered pile at ambient temperature and atmospheric pressure for a period of at least 10 days to complete the ammoniation treatment.

4,064,277
METHOD FOR PROCESSING SOYBEANS
Tamotsu Yokotsuka; Yasuo Asao, both of Nagareyama; Masaru Matsuura, and Hikotaka Hashimoto, both of Noda, all of Japan, assignors to Kikkoman Shoyu Co., Ltd., Noda, Japan
Filed Aug. 4, 1975, Ser. No. 601,374
Claims priority, application Japan, Aug. 12, 1974, 49-91481
Int. Cl.[2] A23J *1/14;* **A23L** *1/20*
U.S. Cl. 426—331 **16 Claims**
1. In a method of processing soybeans to extract soybean protein which method comprises contacting whole or hulled soybeans with water, the improvement comprising reducing the throat catching sensation of the extracted soybean protein by including in said water a competitive inhibitor for β-glycosidase selected from the group consisting of aldonic lactones and Nojirimycin.

4,064,278
FLAVORING WITH α-OXY(OXO)MERCAPTANS
William J. Evers, Red Bank; Howard H. Heinsohn Jr., Hazlet, and Manfred Hugo Vock, Locust, all of N.J., assignors to International Flavors & Fragrances Inc., New York, N.Y.
Division of Ser. No. 723,535, Sept. 15, 1976, Pat. No. 4,024,289. This application Mar. 3, 1977, Ser. No. 774,061
Int. Cl.[2] A23L *1/235*
U.S. Cl. 426—535 **4 Claims**
1. A process for augmenting or enhancing the fruity or vegetable aroma or taste of a foodstuff which comprises adding thereto from about 0.02 ppm up to about 50 ppm by weight of said foodstuff of a sulfur-containing compound which is 3-mercapto-4-heptanol.
2. A process for augmenting or enhancing the fruity or vegetable aroma or taste of a foodstuff which comprises adding thereto from about 0.02 ppm up to about 50 ppm by weight of said foodstuff of a sulfur-containing compound which is 4-mercapto-5-nonanol.

4,064,279
ALPHA-SUBSTITUTED ALKYLIDENE METHIONALS AND USES THEREOF IN FOODSTUFFS AND FLAVORS FOR FOODSTUFFS
Donald Arthur Withycombe, Lincroft; Anne Hruza, Bricktown; Manfred Hugo Vock, Locust; Christopher Giacino, Califon; Braja Dulal Mookherjee, Holmdel; Alan Owen Pittet, Atlantic Highlands, and William L. Schreiber, Jackson, all of N.J., assignors to International Flavors & Fragrances Inc., New York, N.Y.
Filed Dec. 22, 1976, Ser. No. 753,462
Int. Cl.[2] A23L *1/226, 1/231*
U.S. Cl. 426—535 **2 Claims**
1. A process for augmenting or enhancing the aroma or taste of a foodstuff comprising adding to said foodstuff from about 0.02 parts per million up to about 50 parts per million based on the total weight of said foodstuff, of 5-methyl-α[(methylthio)-methyl]-2-furan acrolein having the structure:

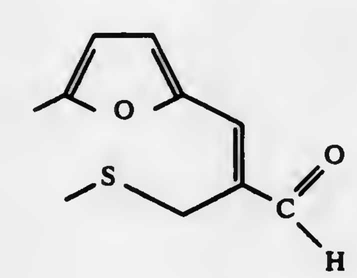

4,064,280
FLAVORING WITH α-OXY(OXO)MERCAPTANS
William J. Evers, Red Bank; Howard H. Heinsohn, Jr., Hazlet, and Manfred Hugo Vock, Locust, all of N.J., assignors to International Flavors & Fragrances Inc., New York, N.Y.
Division of Ser. No. 723,535, Sept. 15, 1976, Pat. No. 4,024,289. This application Mar. 3, 1977, Ser. No. 774,060
Int. Cl.[2] A23L *1/235*
U.S. Cl. 426—535 **2 Claims**
1. A process for augmenting or enhancing the fruity or vegetable aroma or taste of a foodstuff which comprises adding thereto from about 0.02 ppm up to about 50 ppm by weight of said foodstuff of 4-mercapto-5-nonanone.

4,064,281
FLAVORING WITH 1-ACETYL-3,3-DIMETHYL-(2-PROPENYL)CYCLOHEXANE
John B. Hall, Rumson; Mark A. Sprecker, Sea Bright; Frederick Louis Schmitt, Holmdel, and Manfred Hugo Vock, Locust, all of N.J., assignors to International Flavors & Fragrances Inc., New York, N.Y.
Division of Ser. No. 713,429, Aug. 11, 1976, Pat. No. 4,021,488. This application Feb. 4, 1977, Ser. No. 765,635
Claims priority, application United Kingdom, Aug. 11, 1976, 713429/76
Int. Cl.[2] A23L *1/226*
U.S. Cl. 426—538 **2 Claims**
2. A process for augmenting or enhancing the fruit flavor of a foodstuff comprising the step of adding to a footstuff from 0.5 ppm up to about 100 ppm of the compound 1-acetyl-3,3-dimethyl-(2-propenyl)cyclohexane having the structure:

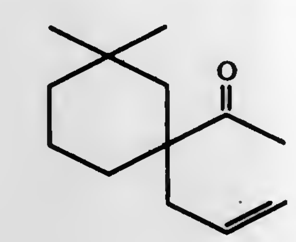

4,064,282
STARCH SPONGE PRODUCTS AND THE PROCESS OF PREPARING SAME
Curtis H. Hallstrom, Anoka; Brian E. Glass, Plymouth; Ali R. Touba, Mound, and George V. Daravingas, Edina, all of Minn., assignors to General Mills, Inc., Minneapolis, Minn.
Filed Dec. 22, 1975, Ser. No. 642,949
Int. Cl.[2] A23L *1/04;* **A23B** *4/04*
U.S. Cl. 426—559 **9 Claims**
1. In the process of preparing a starch sponge food product wherein an aqueous slurry of raw starch is heated to completely gelatinize the starch, the resulting starch paste is frozen to set-up the starch matrix, and the frozen matrix is allowed to thaw and is dehydrated to yield the starch sponge product, the improvement consisting of adding a heat stable gum or gum system to the slurry in an amount sufficient to improve the thermal stability of the starch sponge product.

4,064,283
PREPARATION OF PROTEIN CONCENTRATES FROM WHEY AND SEED PRODUCTS
Robert M. Saunders, and George O. Kohler, both of El Cerrito, Calif., assignors to The United States of America as represented by the Secretary of Agriculture, Washington, D.C.
Filed June 14, 1976, Ser. No. 695,616
Int. Cl.[2] A23J *1/12, 1/14, 1/20*
U.S. Cl. 426—583 **4 Claims**
1. A process for preparing a protein concentrate from whey and a protein-containing seed product, said concentrate beins useful as a human food supplement, which consists of
a. mixing the whey and the protein-containing seed product,
b. applying an alkalizer to the mixture to adjust to a pH of about 9–10,
c. separating a juice containing soluble proteins therefrom,
d. acidifying the juice to pH 5–6,
e. heating the juice to 85°–95° C. to precipitate a solid protein concentrate therefrom,
f. separating the solid protein concentrate from the juice , and
g. washing the solid protein concentrate with water and drying it.

4,064,284
PROCESS FOR THE DEBRANNING OF WHEAT
Pieter Paul Adriaan Theron, Cowie Hill; Adrianus Martinus Vissers, and Aureliano Luigi Saisselin, both of Durban, all of South Africa, assignors to CPC International Inc., Englewood Cliffs, N.J.
Filed July 22, 1975, Ser. No. 598,103
Int. Cl.[2] A23L *1/00*
U.S. Cl. 426—626 **34 Claims**
1. A method for debranning wheat consisting essentially of:
mixing wheat with a mineral acid medium containing sulphuric acid which is present at a concentration of at least about 80% by weight, the ratio of said acid medium to said wheat being no greater than about 30% by weight;
maintaining said wheat in contact with said acid medium for a period sufficient to recover therefrom debranned wheat having a wheat loss of no greater than about 40% by weight; and,
washing said recovered wheat with a neutralizing medium to a pH of about 7.0.

4,064,285
ELECTROPHOTOGRAPHIC DECALCOMANIAS
Joseph Mammino, Penfield, N.Y., assignor to Xerox Corporation, Stamford, Conn.
Filed Dec. 22, 1975, Ser. No. 643,068
Int. Cl.[2] B44C *1/16;* **G03G** *13/16*
U.S. Cl. 427—24 **54 Claims**
1. A method of decalcomania comprising xerographically forming an image pattern of toner, transferring said image to a subbing layer material which rests on an abhesive member, contacting said image carrying member with a cloth, heating said image carrying member while in contact with said cloth and separating said imaged member and said cloth to produce a cloth bearing a permanent image.

4,064,286
RADIATION CURABLE COMPOSITIONS CONTAINING ORGANOSILICON COMPOUNDS
Ernest A. Hahn, Pittsburgh, Pa., assignor to PPG Industries, Inc., Pittsburgh, Pa.
Continuation-in-part of Ser. No. 526,439, Nov. 22, 1974, abandoned. This application May 5, 1976, Ser. No. 683,433
Int. Cl.[2] B05D *3/06*
U.S. Cl. 427—44 **10 Claims**
1. A composition comprising
A. a polymerizable unsaturated organic material selected from the group consisting of
1. radiation curable organic polyacrylates and
2. radiation curable unsaturated polyester resins admixed with at least one copolymerizable monomer, said polyester being a condensation product of an unsaturated polycarboxylic acid and a polyhydric alcohol and
B. an exterior durability enhancing amount of a condensation polymer of a compound corresponding to the formula

$$NH_2(CH_2)_x\overset{\overset{\displaystyle R_z}{|}}{Si}\!-\!(OR_1)_{3-z}$$

where R and R_1 are lower alkyl, x is an integer from 2 to 4 and z is an integer from 0 to 1.
6. In a method of coating which comprises applying a curable coating composition to a substrate and curing the coating employing actinic light or ionizing irradiation, the improvement which comprises employing as the curable coating composition a composition comprising
A. a polymerizable unsaturated organic material selected from the group consisting of
1. radiation curable organic polyacrylates and
radiation curable unsaturated polyester resins admixed

with at least one copolymerizable monomer, said polyester being a condensation product of an unsaturated polycarboxylic acid and a polyhydric alcohol and

B. an exterior durability enhancing amount of a condensation polymer of a compound corresponding to the formula

$$NH_2(CH_2)_x\overset{\displaystyle R_z}{\overset{|}{Si}}(OR_1)_{3-z}$$

where R and R_1 are lower alkyl, x is an integer from 2 to 4 and z is an integer from 0 to 1.

4,064,287

PROCESS FOR TREATING SELECTED AREAS OF A SURFACE WITH SOLDER

Melvin A. Lipson, Fullerton; Dale W. Knoth, Norwalk; Walter D. Custer, Garden Grove, and Michael N. Gilano, Fullerton, all of Calif., assignors to Dynachem Corporation, Santa Ana, Calif.

Division of Ser. No. 473,180, May 24, 1974, Pat. No. 4,003,877. This application June 1, 1976, Ser. No. 691,922

Int. Cl.² B05D *3/06*

U.S. Cl. 427—53 **1 Claim**

1. A process for treating selected areas of a surface with solder which comprises:

A. Screen printing on the surface of a substrate a liquid photopolymerizable ink, thereby leaving on the surface of said substrate an image corresponding to the image on said silk screen the screen printing ink comprising

i. 35–70% by weight of an aryloxyalkyl acrylate having the general formula:

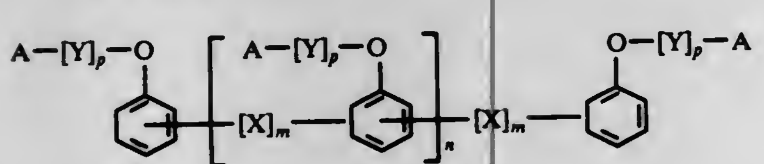

wherein

X is methylene, an alkyl-substituted methylene group, a dialkyl-substituted methylene group, a carbonyl group, a sulfide, a sulfoxide, a sulfone, an amine, an alkyl-substituted amine, an ethylene ether, a propylene ether or, a 2-hydroxylpropylene ether, wherein each alkyl group contains from 1 to 8 carbon atoms;

Y is lower alkyl or lowerhydroxyalkyl of 2 to 8 carbon atoms;

A is an unsaturated acyloxy group having from 3 to 18 carbon atoms; and

n is 0 through 20,

m is 0 or 1,

p is 0 or 1;

ii. 15–45% by weight of a photopolymerizable diluent having terminal ethylenic groups selected from ethylene diacrylate; diethylene glycol diacrylate; tetraethylene glycol diacrylate; glycerol diacrylate; glycerol triacrylate; ethylene dimethacrylate; 1,3-propylene dimethacrylate; 1,2,4-butanetriol trimethacrylate; 1,4-benzenediol dimethacrylate; pentaerythritol tetramethacrylate; 1,3-propanediol diacrylate; 1,6-hexanediol diacrylate; the bis-acrylate of a polyethylene glycol having a molecular weight of 200 to 500; bis-methacrylate of a polyethylene glycol having a molecular weight of 200 to 500; trimethylolpropane triacrylate; pentaerythritol triacrylate; methylene bis-acrylamide; methylene bis-methacrylamide; 1,6-hexamethylene bis-acrylamide; diethylene triamine tri-methacrylamide; bis-(methacrylamidopropoxy) ethane; bis-methacrylamidoethyl methacrylate N-(beta-hydroxyethyloxy) ethyl acrylamide; divinyl succinate; divinyl adipate; divinyl phthalate; divinyl terephthalate; divinyl benzene-1,3-disulfonate; divinyl butane-1,4-disulfonate; and sorbaldehyde;

iii. 0.1–10% by weight of a free radical generating addition polymerizing initiating system;

said photopolymerizable composition having a viscosity of from 5,000 to 200,000 centipoises and a thixotropic index of from 1.00 to 6.00;

B. Exposing the photopolymerizing ink film on such substrate to actinic radiation to cure said ink;

C. Applying solder to the substrate, thereby forming a solder covered substrate in an image corresponding to the areas of exposed substrate not coated with the photopolymerizable ink.

4,064,288

METHOD FOR REGISTERING ANODE AND CATHODE LAYERS ON A WEB

Hemendra K. Shah, Leominster, and William G. Turner, North Tewksbury, both of Mass., assignors to Vertipile, Inc., Leominster, Mass.

Filed Mar. 11, 1976, Ser. No. 666,083

Int. Cl.² H01M *6/40*

U.S. Cl. 427—58 **10 Claims**

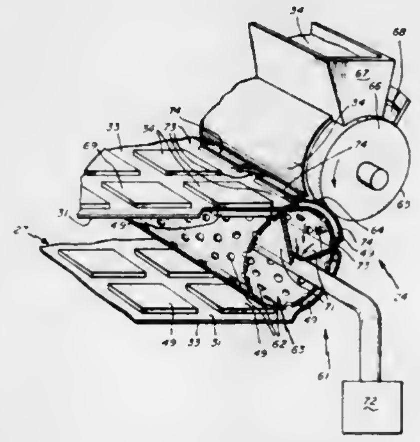

1. A method for continuously making a continuous strip of spaced apart, oppositely disposed cathode and anode deposits, from slurries thereof, said method comprising the steps of:

advancing a continuous web of electrically conductive sheet material along a path through a coating nip in a first coating zone, a first drying zone, a coating nip in a second coating zone and a second drying zone;

depositing a plurality of individual and successive deposits of cathode slurry in a predetermined pattern on one face of said web in said first coating zone, the pattern of said cathode deposits being raised out of the plane of said web;

drying said cathode deposits in said first drying zone;

supporting said advancing web in said coating nip in said second coating zone by contact only with the said raised cathode deposit while flexing the portion of said web around said deposit away from the normal plane of said web,

while so supporting said web in said coating nip, simultaneously reverse roll coating a deposit of anode slurry, on the other face of said web, individually and successively on the area of said web defined by the predetermined pattern of said cathode deposit, free of any deposit on the portions flexed out of the normal plane of said web in said coating nip, and then drying said anode deposits in said second drying zone.

4,064,289

METHOD OF MAKING A SEMICONDUCTOR DEVICE

Takashi Yokoyama; Yasuo Miyadera; Nobuhiko Shito; Hiroshi Suzuki, all of Hitachi, and Yoshiaki Wakashima, Kawasaki, all of Japan, assignors to Hitachi, Ltd., Tokyo, Japan

Filed Aug. 21, 1975, Ser. No. 606,354

Claims priority, application Japan, Aug. 21, 1974, 49-95015

Int. Cl.² H01L *23/30*

U.S. Cl. 427—82 **7 Claims**

1. A method of making a semiconductor device in which a desired surface of a pn-junction of a semiconductor body is coated with a polyimide resin, which comprises:

applying a solution of the polyimide resin in an organic solvent onto the surface; and

removing the solvent from the solution by heating to form a coating of the resin on the surface, wherein the polyimide resin is a heterocyclic ring-containing polymer that is a reaction product at 80° C or above of a diamine represented by the formula:

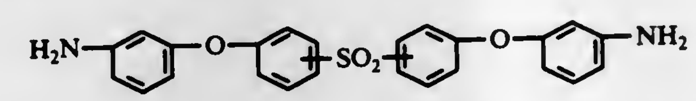

with a tetracarboxylic acid, the heterocyclic rings of the polymer being substantially closed in the solution.

4,064,290

SYSTEM FOR COATING PLATED THROUGH HOLE SURFACES

Julius Alex Ebel, 5334 Pamela Kay Lane, Anaheim, Calif. 92806, and Ernest H. Mitchell, 3313 S. Timber, Santa Ana, Calif. 92707

Continuation-in-part of Ser. No. 148,261, May 17, 1971, abandoned. This application Aug. 6, 1973, Ser. No. 385,950

Int. Cl.² B05D *1/32, 5/12*

U.S. Cl. 427—97 **6 Claims**

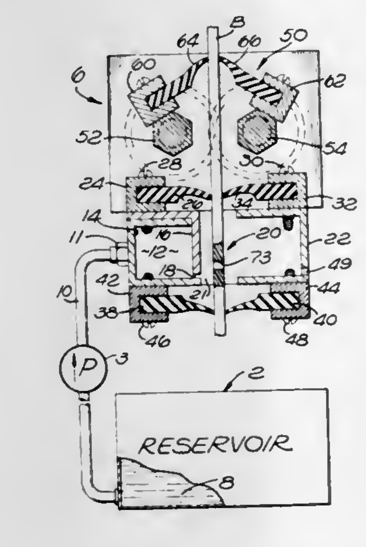

1. A method of coating the walls of holes through a printed circuit board to provide a resist coating on such walls comprising the steps of:

providing a fluid having a characteristic for adhering to said walls and curable to a solid coating;

flowing a stream of said fluid through said holes, which stream completely fills said holes and whereby flow is in sufficient quantity to purge air and impurity particles from said holes; and

ceasing said stream of said fluid and curing such fluid as adheres to said walls to provide a coating.

4,064,291

SPRAY-COATING METHOD OF WINDOW FORMING IN TUBULAR LAMP

William Lodewijk Kuijer; Peter Ivan Sygall, and Paulus Johannes Wennekes, all of Eindhoven, Netherlands, assignors to U.S. Philips Corporation, New York, N.Y.

Filed Oct. 26, 1976, Ser. No. 735,321

Claims priority, application Netherlands, Nov. 4, 1975, 7512882

Int. Cl.² B05D *1/02;* **H01K** *7/02*

U.S. Cl. 427—106 **2 Claims**

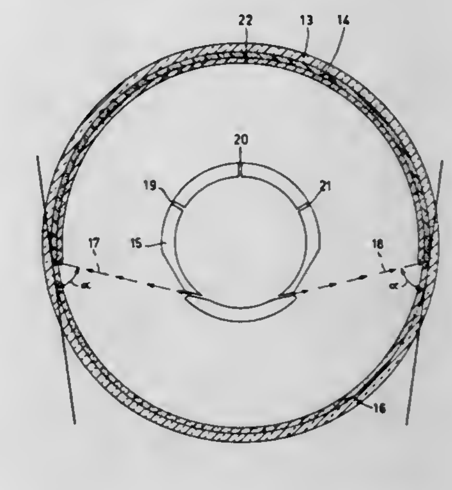

1. A method of applying a coat of a suspension or solution to the inner wall of a tubular lamp, which coat is provided with a longitudinal slot, which comprises: spraying the suspension or solution with a plurality of jets onto the inner wall of the tubular envelope of the lamp, after positioning said jets in a common plane which (1) intersects a portion of the envelope immediately adjacent to the slot to be formed (2) is parallel to the longitudinal axis of the lamp and (3) is disposed at an included angle of less than 75° intermediate said common plane and another plane which is tangentially disposed to said envelope at the line of intersection of said envelope and said common plane, said jets being also disposed at an angle greater than 45° with respect to the line defined by the intersection of said common plane and said envelope.

4,064,292

MANUFACTURE OF COBALT-MODIFIED γ-IRON(III)OXIDES

Eduard Schoenafinger, Ludwigshafen; Matthias Schwarzmann, Limburgerhof, and Eberhard Koester, Frankenthal, all of Germany, assignors to Badische Anilin- & Soda-Fabrik, Aktiengesellschaft, Ludwigshafen (Rhine), Germany

Continuation of Ser. No. 393,040, Aug. 30, 1973, abandoned. This application Feb. 10, 1976, Ser. No. 656,800

Claims priority, application Germany, Sept. 1, 1972, P2243231

Int. Cl.² H01F *10/02*

U.S. Cl. 427—132 **5 Claims**

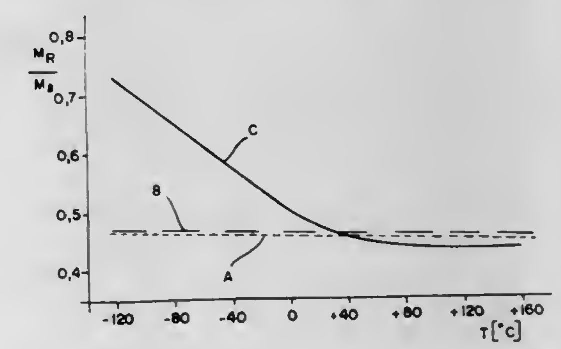

1. A magnetic recording medium of high coercivity and improved thermal and mechanical stability comprising: a base and a magnetic coating comprising magnetic pigment dispersed in a resin binder on said base, said magnetic coating containing as the magnetic pigment, a cobalt-modified gamma-

iron (III) oxide which has been prepared by applying a cobalt compound which at the temperature used decomposes into cobalt oxide or cobalt to an acicular gamma-iron (III) oxide or an acicular magnetite, and subsequently heating the gamma-iron (III) oxide to which said cobalt compound has been applied or heating the magnetite to which said cobalt compound has been applied under oxidation conditions to form gamma-iron (III) oxide, said gamma-iron (III) oxide or magnetite having been formed from the magnetite precursor acicular iron oxide or its hydrate which prior to reducing the precursor to form magnetite was substantially encapsulated with from about 0.1 to 6% by weight based on the weight of the iron oxide or its hydrate of an inorganic protective coating to prevent the needles of the precursor from sintering together during the reduction reaction, said reduction reaction taking place at a temperature of from 350° to 650° C, and wherein the gamma-iron (III) oxide or magnetite to which the cobalt compound was applied is heated at a temperature of between 80° and 300° C.

4,064,293

TREATING HOLLOW ARTICLES BY FLUID DRIVEN BUG

Manfred E. Nicklas, 1627 Redwood Drive, Harvey, La. 70058
Division of Ser. No. 597,515, July 21, 1975, Pat. No. 4,036,173. This application Apr. 1, 1977, Ser. No. 783,708
Int. Cl.² B05D *1/02*
U.S. Cl. 427—236 **8 Claims**

1. A method of working the internal surface of an elongated, hollow, open-ended object with a device capable of traveling along said internal surface, said method comprisng the steps of:
a. positioning said device in the object adjacent one of the ends;
b. securing a rope having a length approximately at least as long as the length of said object to said device;
c. providing lightweight means adapted to be moved the length of said object by an air stream;
d. positioning said lightweight means on the side of said device which is closest the other end of said object;
e. joining a section of said rope with said lightweight means at a distance along the rope removed from said device which is at least approximately equal to the length of said object;
f. directing a stream of air against said lightweight means to move the latter together with said rope along the length of said object;
g. pulling said device through said object to said other end with said rope;
h. moving the rope to a position where it will not interfere with the working operation of said device; and
i. moving said device back through said object toward said one end as the device is operated to work said internal surface.

4,064,294

IN-SITU PRODUCTION OF MICROCAPSULES ON A SUBSTRATE

Simon Babil, Trumbull, Conn.; James A. Claar, Monroeville, and Rodger G. Temple, Gibsonia, both of Pa., assignors to PPG Industries, Inc., Pittsburgh, Pa.
Filed June 2, 1975, Ser. No. 583,312
Int. Cl.² B05D *3/02*
U.S. Cl. 427—373 **29 Claims**

1. A method of preparing void-containing microcapsules in-situ in a film which comprises the steps of:
A. preparing a polymer composition selected from the group consisting of:
1. a homogenous solution containing a water-immiscible organic polymer, a water immiscible solvent for the polymer and a water-immiscible lower volatility non-solvent which is miscible with the solvent, and
2. an emulsion containing as the continuous phase a water-immiscible organic polymer dissolved in a water immiscible solvent for the polymer and as the discontinuous phase droplets of a lower volatility non-solvent dispersed in the continuous phase;
B. emulsifying said polymer composition into a water-based polymer coating composition under agitation and in the presence of a surfactant;
C. applying the water-based polymer coating composition containing said emulsified polymer composition to a substrate;
D. evaporating the polymer solvent from the emulsified polymer composition to produce in-situ in said applied coating composition microcapsules having entrapped therein discrete droplets of the lower volatility non-solvent; and
E. drying said coating composition to evaporate the lower volatility non-solvent from the microcapsules thereby producing a film having incorporated therein sructured, closed-celled, void-containing microcapsules.

4,064,295

SPRAYING ATOMIZED PARTICLES

Alfred Richard Eric Singer, Swansea, Wales, assignor to National Research Development Corporation, London, England
Division of Ser. No. 521,403, Nov. 6, 1974, Pat. No. 3,970,249. This application Mar. 5, 1976, Ser. No. 664,363
Claims priority, application United Kingdom, Nov. 6, 1973, 51437/73
Int. Cl.² B05D *1/02*
U.S. Cl. 427—424 **7 Claims**

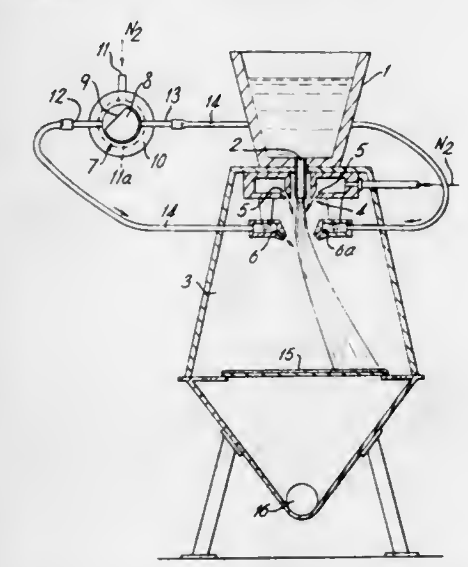

1. A process for spraying atomized particles onto a substrate comprising the steps of:
producing a stream of gas atomized particles and directing the stream towards said substrate;
directing secondary streams of gas sequentially against the stream of gas atomized particles from opposite sides thereof to deflect the stream of gas atomized particles and to impart thereto a continuous oscillation substantially in a single plane, said secondary streams each having a component of motion which is in the undeflected direction of flow of the stream of atomized particles and each having a maximum pressure in the same order of magnitude as the pressure of the gas in the atomized particle stream; and
moving said substrate relative to the plane of the particle stream whereby the plane intersects said substrate along a line substantially at a right angle to the direction of movement of the substrate.

4,064,296

HEAT SHRINKABLE MULTI-LAYER FILM OF HYDROLYZED ETHYLENE VINYL ACETATE AND A CROSS-LINKED OLEFIN POLYMER

Norman D. Bornstein, Spartanburg; Donald J. d'Entremont; Alan S. Weinberg, both of Greenville; Henry G. Schirmer, and Joseph Zu Sun, both of Spartanburg, all of S.C., assignors to W. R. Grace & Co., Duncan, S.C.
Filed Oct. 2, 1975, Ser. No. 618,876
Int. Cl.² B65D *11/00, 35/00*
U.S. Cl. 428—35 **14 Claims**

1. A multi-layer packaging film having low oxygen permeability comprising:
a. two polymeric layers, at least one of which comprises an olefin polymer cross-linked to the equivalent of a dosage level in the range of 2 to 12 MR; and,
b. a layer between said two polymeric layers which comprises a hydrolyzed ethylenevinyl acetate copolymer thereby defining a multi-layer film having at least three layers, said film having at least 10% heat shrinkage in both longitudinal and transverse directions at 195° F.

12. A heat shrinkable multi-layer film having at least one layer which comprises a hydrolyzed ethylene vinyl acetate copolymer and a layer of crosslinked olefin polymer, said film having an oxygen transmission rate of less than 30.0 cc/m², 24 hrs., atm. at 73° F.

4,064,297

INTERLAMINAR FLOCKED LAMINATE

George Edward Power, and Dudley Wulfekotter, both of Cincinnati, Ohio, assignors to Formica Corporation, Cincinnati, Ohio
Filed Sept. 29, 1975, Ser. No. 617,928
Int. Cl.² B32B *33/00*
U.S. Cl. 428—86 **9 Claims**

1. An article of manufacture comprising a heat and pressure consolidated assembly comprising, in superimposed relationship,
1. a thermoset resin impregnated, decorative paper layer and
2. a thermoset resin impregnated paper sheet having
a. a dry adhesive coating positioned on the side thereof opposite said paper layer and
b. flocked fibers implanted in said adhesive in generally a perpendicular orientation to said sheet, said adhesive being substantially non-flowable in the dry state when subjected to the heat and pressure of high or low pressure decorative laminating.

4,064,298

FLAME-RETARDANT POLYAMIDE FIBER FOR USE IN CARPETS

Judd Leonard Schwartz, Chester, and Richard Eugene Mayer, Richmond, both of Va., assignors to Allied Chemical Corporation, Morris Township, N.J.
Filed Sept. 22, 1976, Ser. No. 725,908
Int. Cl.² D03D *27/00;* **D04H** *11/00*
U.S. Cl. 428—95 **6 Claims**

1. A flame-retardant pile carpet having a relatively pliable primary backing and a tufted surface, said surface being comprised of polyamide fibers having incorporated therein from 1 to 15 percent of the total weight of an organic chloride containing from 50 to 80 percent by weight of chlorine, which is substantially non-reactive with said polyamide except at temperatures above 300° C. and from 1 to 15 percent of the total weight of zinc borate, said fibers being bonded to said backing with a bonding substance comprising a latex material and a hydrate material selected from the group consisting of aluminum hydroxide and hydrated aluminum oxide, the ratio by weight of said latex material to said hydrate material being within the range 1:2 to 1:4.5.

4,064,299

ANTI-FRICTION COMPOSITE WITH METAL BACKING OF RIGID PRONGS AND LUBRICANT OVERLAY

Ronald T. Martin, Kent, Wash., assignor to Formac International, Inc., Seattle, Wash.
Filed Oct. 2, 1975, Ser. No. 618,946
Int. Cl.² B32B *3/06*
U.S. Cl. 428—102 **30 Claims**

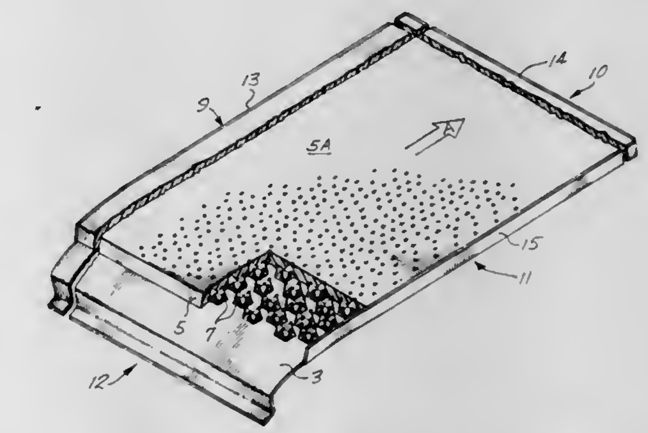

1. A heat-transmitting, anti-friction composite comprising a metal backing member carrying rigidly thereon a multiplicity of rigid prongs projecting transversely from a face thereof, an overlay sheet comprised of a solid lubricant, said overlay sheet being impaled on said prongs, the tips of said prongs being substantially coincident with the face of said overlay sheet remote from said backing member.

15. In a continuous press for the manufacture of consolidated board-like products comprising a movable, heattransmitting belt adapted to transport workpieces through the press and providing a pressure surface for applying heat and pressure to workpieces, heat and pressure application means for transmitting heat to said belt and urging the belt against workpieces, said heat and pressure application means including low-coefficient-of-friction surfacing means defining a bearing surface over which said belt slides and at which heat and pressure are transmitted to said belt, the improvement wherein said surfacing means comprises a composite comprised of a metal backing member carrying rigidly thereon a multiplicity of rigid prongs projecting transversely from a face thereof, an overlay sheet comprised of a solid lubricant, said overlay sheet being impaled on said prongs, the tips of said prongs being substantially coincident with the face of said overlay sheet remote from said backing sheet.

4,064,300

LAMINATED MATERIALS

Jagnandan Kumar Bhangu, Ockbrook, England, assignor to Rolls-Royce Limited, London, England
Filed July 7, 1976, Ser. No. 703,248
Claims priority, application United Kingdom, July 16, 1975, 29786/75
Int. Cl.² F28F *3/04, 3/14;* **F02C** *7/18*
U.S. Cl. 428—120 **7 Claims**

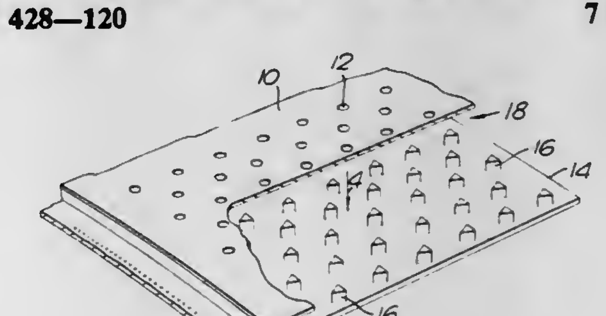

1. A laminated material adapted to be subjected to a flow of relatively cool fluid across one of its outer surfaces and to a

flow of hot fluid across the other of its outer surfaces, said laminated material comprising: two sheets spaced apart to define an area for the flow of a cooling fluid there-between in generally the same direction as the flow of the hot and cool fluids across the outer surfaces of the laminated material, one of said sheets which is subjected to the cool fluid across its outer surface having a plurality of spaced perforations so that portions of the cooling fluid flowing across its outer surface can enter into the area between said sheets and flow therebetween in the same general single predetermined direction as the hot and cool fluids flowing across the outer surfaces of the laminated material and the other of said sheets being imperforate to the flow of fluid, a plurality of heat conductive portions connecting said two sheets and abutting said sheets between the perforations in a downstream direction of the perforations, said heat conductive portions being shaped to deflect cooling fluid entering the area between the sheets through any of said perforations into said general single predetermined direction and said conductive portions being further positioned in front of perforations to guide cooling fluid flowing between said sheets away therefrom whereby cooling fluid entering therethrough between said sheets is undisturbed by cooling fluid entering previously through other perforations.

4,064,301
FLORAL BASE
John H. Howard, Lexington, Ky., assignor to Day Star Foam Company, Lexington, Ky.
Filed Feb. 14, 1977, Ser. No. 768,337
Int. Cl.² B32B *3/26*
U.S. Cl. 428—151 **10 Claims**

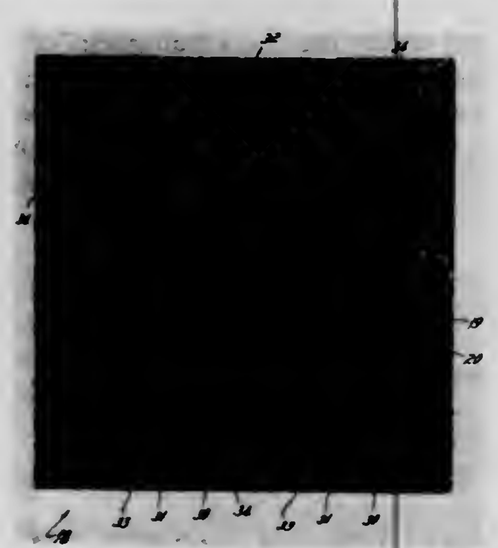

7. A foam material which simulates weathered rough lumber,
said material being a rigid, closed cell foam of cohered, generally spherical expanded polystyrene beads and having a cut major surface,
the cut beads at said major surfaces having a flat skin thereover,
a series of generally parallel irregular grooves and cavities of differing width and depths formed in said major surface,
said grooves and cavities being defined by removal of groups of entire beads,
said major surface also having thereon a plurality of much narrower, elongated shallow slit-like cuts,
said surface being coated with a latex paint.

4,064,302
COMPOSITE FLEXIBLE, SEMI-RIGID MATERIALS AND PROCESS FOR MAKING SAME
Edward C. Kozlowski, 74 Columbine Drive, Trumbull, Conn. 06611, and Matthew D. Chamlin, 322-A Hallman St., Pittsburgh, Pa. 15206
Division of Ser. No. 336,722, Feb. 28, 1973, Pat. No. 3,896,991. This application May 14, 1975, Ser. No. 577,400
Int. Cl.² B32B *3/00*
U.S. Cl. 428—152 **10 Claims**

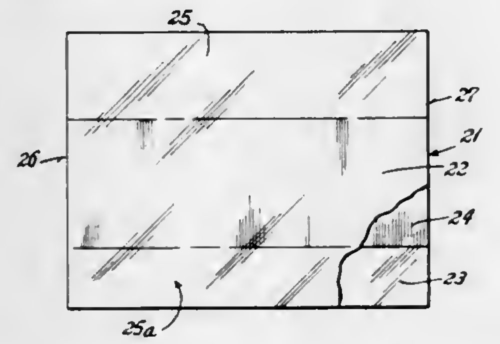

1. A laminate comprising a relatively rigid self-supporting central strip of determinate length and width having opposed ends and opposed sides, a first strip of flexible plastic film adhered to the entire surface area of one surface of said central strip and a second strip of flexible plastic film adhered to the entire surface area of the other surface of said central strip, said first and second strips of plastic film being of the same length as but substantially wider than said central strip and having projecting marginal portions extending substantially beyond each side of the central strip and being adhered together in face-to-face relation to provide continuous marginal strips adjacent each side of the entire length of said central strip, the ends of said central strip being devoid of marginal strips of said plastic films, the first and second plastic films being adhered to said central strip and to each other in the marginal portions to the substantial exclusion of any air trapped therebetween, said laminate being adapted to have its opposed ends secured together by means of a plastic-to-plastic seal to form a tubular container, and the continuous marginal strips of said adhered plastic films projecting beyond the opposed sides of said central strip being sufficiently wide that they are adapted to be brought together to form end closures of said tubular container.

4,064,303
PROCESS FOR DECORATING HEAT-STABLE POLYMER COATING COMPOSITIONS
Eustathios Vassiliou, Newark, Del., assignor to E. I. Du Pont de Nemours and Company, Wilmington, Del.
Continuation-in-part of Ser. No. 509,937, Sept. 27, 1974, abandoned, and a continuation-in-part of Ser. No. 552,873, Feb. 25, 1975, abandoned, which is a continuation-in-part of Ser. No. 509,937, Sept. 27, 1974, abandoned. This application Aug. 22, 1975, Ser. No. 606,299
Int. Cl.² B32B *3/10, 27/00;* B05D *3/02*
U.S. Cl. 428—201 **16 Claims**

1. A process for decorating a heat-stable polymer coating on a substrate; the process consisting essentially of applying a heat-stable polymer composition either directly under or as a subsequent coat over an oxidation catalyst composition which is arranged in a decorative pattern on a substrate, and then baking the coating; wherein the oxidation catalyst or its decomposition product diffuses into the coating and either by reacting with the components of the coating, by catalyzing reactions within the coating or by itself renders, upon baking, the decorative pattern visible within the heat-stable polymer coating;
wherein the heat-stable polymer composition comprising:
a. heat-stable polymer stable at temperatures above 300° C, said polymer being silicone, polysulfides, polymerized parahydroxy benzoic acid, polysulfone, polyimide, polyamide, polysulfonate, polysulfonamide, fluorocarbon, or mixtures thereof,
b. a liquid carrier, and
C. optionally an oxidation catalyst;
D. optionally a colorant;
wherein the oxidation catalyst is a compound or mixture of compounds produced by reaction of a metal from list (1) with an acid to form a salt compound of list (2)

(1)	Metal	
	Cobalt	Bismuth
	Cerium	Nickel
	Manganese	Lead
	Iron	
(2)	Salts	
	Acetate	Octoate
	Caprate	Oleate
	Caprylate	Palmitate
	Isodecanoate	Ricinoleate
	Linoleate	Stearate
	Nitrate	Tallate
	Naphthenate	Soyate.

11. An article bearing a decorative pattern produced by the process of claim 1.

4,064,304
COATED SYNTHETIC PAPER ADAPTED FOR OFFSET PRINTING AND METHOD FOR PRODUCTION THEREOF
Seigoro Fujita, Amagasaki, and Tojiro Kitahori, Kawanishi, both of Japan, assignors to Kanzaki Paper Manufacturing Company, Ltd. and Toray Industries, Inc., both of Tokyo, Japan
Continuation of Ser. No. 480,548, June 17, 1974, abandoned. This application July 14, 1976, Ser. No. 705,169
Claims priority, application Japan, June 18, 1973, 48-67849
Int. Cl.² D21H *1/28, 1/34, 5/12*
U.S. Cl. 428—207 **16 Claims**

16. A method for the production of a coated synthetic paper adapted for offset printing, comprising:
preparing a base paper sheet comprising fibrous material, at least 5% by weight of which is formed of polyolefinic pulp fibrils, which are formed from a polyolefinic polymer and a hydrophilic polymer, said polyolefinic pulp fibrils having a specific surface area of at least 0.7 square meter/g., and
forming a microporous and discontinuous coating layer on at least one of the surfaces of said base paper sheet with a coating composition consisting essentially of 5 to 100 parts by weight on a dry weight basis of an adhesive component and 100 parts by weight on a dry weight basis of pigment component, at least 5% by weight on a dry weight basis of said pigment component being an organic polymer pigment in the form of finely divided particles selected from the group consisting of polystyrene, poly(α-methylstyrene), poly(4-ethylstyrene), poly(1-vinylnaphthalene), polyvinyl chloride, poly (hexafluoropropylene), polyethylene, polypropylene, poly(1-butene), poly(4-methyl-1-pentene), polyvinylidene chloride, poly (1,2-difluoroethylene), poly(methyl methacrylate), poly(isopropyl chloroacrylate), poly(2-chloroethyl methacrylate), poly (cyclohexyl chloroacrylate), poly(methyl chloroacrylate), polyvinyl acetate, polyallyl acetate, polyvinyl propionate, poly(ethylene 1,5-naphthalate), polyethylene terephthalate, poly (hexamethylene adipamide), poly(ε-capramide), poly(decamethylene adipamide), polycarbonates, polyacetals, polyvinyl formal, polyvinyl butyral, and copolymers of the constituent monomers of the above-named polymers.

4,064,305
KNITTED CAMOUFLAGE MATERIAL
Erik W. Wallin, Gamleby, Sweden, assignor to Barracudaverken AB, Sweden
Continuation of Ser. No. 576,983, May 13, 1975, abandoned. This application Nov. 8, 1976, Ser. No. 739,726
Int. Cl.² G01S *7/36*
U.S. Cl. 428—246 **7 Claims**

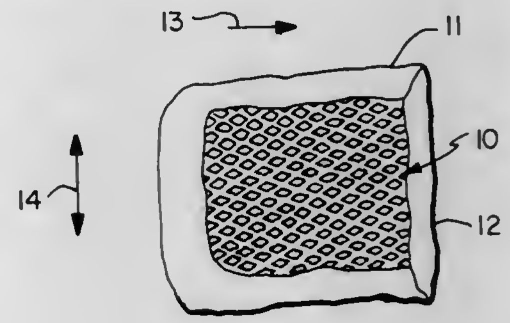

1. An improved radar-defeating, flexible camouflage material comprising
a base fabric comprising a plurality of strands of spun yarn knitted together to form a stretchable, flexible, substantially planar fabric having a plurality of openings therethrough,
each of said strands comprising a spun mixture of polymeric fibers and noncontinuous electrically conductive fibers with said conductive fibers comprising about 2 to 10 percent of the spun yarn, by weight to cause said base fabric to exhibit radar reflectance characteristics similar to its natural surrounding environment;
a first flexible film covering and adhered to one surface of said fabric, and
a second flexible film covering and adhered to the other surface of said fabric,
said first and second films being adhered to each other through said openings in said fabric.

4,064,306
SUBSTANTIALLY CLOSED FABRIC MADE BY COMPRESSIVE REDISTRIBUTION OF THE FILAMENTS OF AT LEAST SOME YARNS OF AN OPEN MESH FABRIC
Stephen R. Scotchmer, St. Catharines, and Robert D. MacGregor, Hazeldean, both of Canada, assignors to Bay Mills Limited, Downsview, Canada
Continuation of Ser. No. 650,960, Jan. 19, 1976, abandoned, which is a continuation of Ser. No. 466,492, May 2, 1974, abandoned. This application Jan. 24, 1977, Ser. No. 761,723
Int. Cl.² B32B *5/26, 31/20;* D03D *13/00;* D04H *3/12, 3/14*
U.S. Cl. 428—255 **25 Claims**

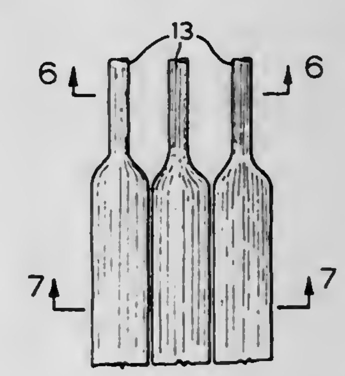

1. A process for making an essentially closed fabric which comprises: providing an open mesh fabric having an open area of less than 70% of the area of the fabric, the open mesh fabric being of a type comprising at least one layer of warp yarns and at least one layer of fill yarns, said at least one layer of warp yarns constituting one group of yarns, said at least one layer of fill yarns constituting a second group of yarns, said warp and

fill yarns intersecting one another at an angle, at least the yarns of one of said two groups of yarns being composed of continuous filaments having at least twenty filaments per yarn, at least said yarns of said one group also having not more than one turn per inch, the denier per inch of at least said one group of yarns being at least four thousand, said yarns being coated with at least 5% based on the weight of the yarns after having been coated of a thermoplastic material having a softening point which is lower than the softening point of said filaments, said thermoplastic material being in a sufficiently soft condition that said filaments are capable of spreading out when subjected to compression; applying sufficient pressure to said open mesh fabric to cause said filaments to spread out to close the openings in said open mesh fabric to the extent that the open area of said open mesh fabric is reduced by at least 50% with all of said yarns lying in substantially a single layer, said pressure being applied by passing said open mesh fabric through the nip between two rotating rolls, one of said rolls being heated to a surface temperature at said nip above said softening point of said thermoplastic material but less than the softening point of said filaments and the other of said rolls having a surface temperature less than the softening point of said thermoplastic material; and maintaining said filaments in their spread out position while permitting said thermoplastic material to set by withdrawing the fabric from said nip while maintaining said fabric in tension and in contact with the surface of said other roll immediately after said fabric has passed through said nip for a time at least sufficient for said thermoplastic material to set to a point where it maintains said filaments in spread out position, whereby an essentially closed fabric is made by compressively redistributing said filaments of at least said one group of yarns of said open mesh fabric.

4. The product produced by the process of claim 1.

4,064,307

MOLDING AND COATING COMPOSITIONS

Joseph Leopold Lajoie, Terrasse Vaudreuil, Canada, assignor to L. Lajoie Inc., Terrasse Vaudreuil, Canada

Filed Oct. 18, 1976, Ser. No. 733,311

Int. Cl.[2] D02G *3/00*

U.S. Cl. 428—310 **15 Claims**

14. A coated substrate comprising a substrate having a coating thereon comprising a film forming organic binder containing a reinforcing amount of an amorphous, cellular absorbent urea-formaldehyde fibrous material.

4,064,308

ABRASION AND ANTIFOG-RESISTANT OPTICAL ELEMENT

Bernard L. Laurin, Ludlow, Mass., assignor to American Optical Corporation, Southbridge, Mass.

Continuation of Ser. No. 578,793, May 19, 1975, abandoned. This application Aug. 24, 1976, Ser. No. 717,065

Int. Cl.[2] C08J *7/12;* **G02B** *1/10;* **G02C** *7/02;* **B32B** *17/06*

U.S. Cl. 428—410 **3 Claims**

1. An abrasion-resistant optical element comprising a transparent base element of glass or plastic having a transparent, abrasion-resistant, antifogging coating on at least one surface thereof comprising a cross-linked polyvinyl alcohol wherein said polyvinyl alcohol is cross-linked with a curing agent which is composed of 1 to 3 parts by weight of zirconium nitrate and 3 to 1 parts by weight of formaldehyde, said curing agent constituting 0.2 to 0.8 percent by weight, on a solids basis, of the total weight of polyvinyl alcohol and curing agent.

4,064,309

PROCESS FOR PRINTING FIBROUS MATERIAL

Franz Merger, Frankenthal; Gerhard Nestler; Knut Oppenlaender, both of Ludwigshafen; Guenter Uhl, Worms, and Ruediger Wissler, Weisenheim, all of Germany, assignors to BASF Aktiengesellschaft, Ludwigshafen, Germany

Filed Oct. 29, 1976, Ser. No. 736,893

Claims priority, application Germany, Dec. 12, 1975, 2555967

Int. Cl.[2] B05D *5/00, 3/02;* **B32B** *27/38*

U.S. Cl. 428—413 **4 Claims**

1. In a process for printing fibrous material, wherein a print paste consisting essentially of an oil-in-water emulsion of a pigment, a thickener, a pigment binder and an emulsifier of the type of the oxyalkylated phenol derivatives is applied to said fibrous material, the improvement which comprises using as the said emulsifier, from 0.1 to 0.5% by weight, based on the finished print paste, of a product obtained by first oxyalkylating one mole of di-(α-phenyl-ethyl)-phenol with from 2 to 12 moles of an epoxide selected from propylene oxide, butylene oxide and mixtures thereof, and then oxyethylating the product with from 14 to 30 moles of ethylene oxide whereby said emulsifiers can be poured or pumped at room temperature.

4,064,310

CONDUCTOR COMPOSITIONS

Frank Knowles Patterson, Wilmington, Del., assignor to E. I. Du Pont de Nemours and Company, Wilmington, Del.

Filed Mar. 7, 1977, Ser. No. 775,273

Int. Cl.[2] H01B *1/02*

U.S. Cl. 428—427 **10 Claims**

1. Conductor compositions of finely divided inorganic powder dispersed in an inert liquid vehicle, wherein the inorganic powder is a material of the formula

$$Ni_3B_{1-x}P_x,$$

wherein x is in the approximate range 0.05–0.6.

4,064,311

PRODUCTION OF METAL-CERAMIC ARTICLES

John Walford McLean, London, and Ian Robert Sced, Staines, both of England, assignors to National Research Development Corporation, England

Filed July 9, 1975, Ser. No. 594,324

Claims priority, application United Kingdom, July 12, 1974, 30978/74; Jan. 8, 1975, 00804/75

Int. Cl.[2] A61C *5/08;* **B32B** *15/04*

U.S. Cl. 428—434 **15 Claims**

1. A process for the production of a metal-ceramic dental restoration, whih comprises fitting porcelain on to a metal substrate selected from the group consisting of the noble metals and alloys thereof, the metal substrate having deposited thereon an adherent layer of a chemically uncombined metal oxide which is wetted by the porcelain in the fused state.

14. A metal-ceramic dental restoration produced by practicing the process of claim 1.

4,064,312

NONIMAGED WATERLESS LITHOGRAPHIC MASTER WITH A CURABLE SILICONE ELASTOMER AND A CURED INK RELEASABLE SILICONE LAYER

Richard G. Crystal, Dallas, Tex., assignor to Xerox Corporation, Stamford, Conn.

Division of Ser. No. 428,964, Dec. 27, 1973, abandoned. This application Mar. 14, 1975, Ser. No. 558,616

Int. Cl.[2] B32B *9/04*

U.S. Cl. 428—447 **7 Claims**

1. A nonimaged waterless lithographic master comprising:

a. a master substrate,

b. a silicone elastomer layer curable to an ink-releasing condition adhered to said substrate, and

c. a cured ink releasable silicone elastomer surface layer adhered to said curable silicone layer, said cured silicone containing an amount of curing catalyst sufficient to cure the underlying silicone and being of a type of silicone curable at a temperature lower than the curable silicone layer of (B) so as to permit preferential curing.

4,064,313

HEAT FIXING MEMBER FOR ELECTROPHOTOGRAPHIC COPIERS

Koichi Takiguchi, Fairport, N.Y., and Teruhiko Itami, Tokyo, Japan, assignors to Rank Xerox Ltd., London, England

Filed Dec. 17, 1976, Ser. No. 751,825

Int. Cl.[2] B32B *15/08;* **G03G** *13/20;* **C09J** *3/14*

U.S. Cl. 428—447 **8 Claims**

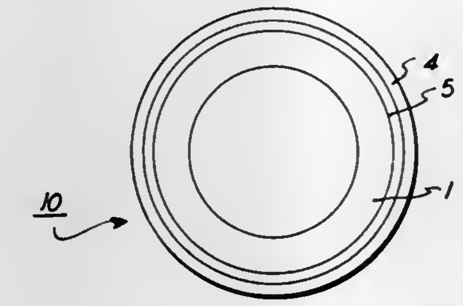

1. A fuser member for pressure fusing electrostatic toner images at elevated temperatures comprising a substrate coated with at least one layer of a heat resistant silicone rubber and having a polysiloxane composition intermediate the silicone rubber layer and the substrate, said polysiloxane composition having improved adherence to said substrate and said silicone rubber and having resistance to heat and silicone oil degradation, and comprising:

a. 100 parts by weight of an organopolysiloxane of the formula, $R^1{}_nSiO_{4-n/2}$ wherein R^1 is a substituted or unsubstituted monovalent hydrocarbon group, at least 80 mole percent of R^1 being a methyl group and having an aliphatic unsaturated group in an amount not more than 0.2 mole percent, and were n is a positive integer of from 1.98 to 2.01, and having a viscosity greater than 100,000 centistokes at 25° C;

b. 5 – 100 parts by weight of an organopolysiloxane of the formula, $R^2SiO_{4-m/2}$ wherein R^2 is a substituted or unsubstituted monovalent hydrocarbon group, about 3 to 25 mole percent of the total R^2 being a vinyl group, and where m is a positive integer from 1.9 to 2.3, and having a viscosity of from about 5 to 10,000 centistokes at 25° C;

c. 10 to 80 parts by weight of an allyl ester of a polybasic acid;

d. 3 to 20 parts by weight of an aliphatic acid salt of a metal; and

e. 0.2 to 20 parts by weight of a silane compound expressed by a general formula, $R^3Si(OR^4)_3$ wherein R^3 is an unsaturated hydrocarbon group and R^4 is a member selected from the group consisting of a methyl group, an ethyl group, a β-methoxyethyl group and a β-ethoxyethyl group, and partially hydrolyzed products thereof.

5. A method of adhering a heat-resistant silicone rubber layer to a base member comprising applying at least one layer of a polysiloxane composition intermediate the base member and the silicone rubber layer, said polysiloxane composition comprising:

a. 100 parts by weight of an organopolysiloxane of the formula, $R^1{}_nSiO_{4-n/2}$ wherein R^1 is a substituted or unsubstituted monovalent hydrocarbon groups, at least 80 mole percent of R^1 being a methyl group and having an aliphatic unsaturated group in an amount not more than 0.2 mole percent, and where n is a positive integer of from 1.98 to 2.01, and having a viscosity greater than 100,000 centistokes at 25° C;

b. 5 – 100 parts by weight of an organopolysiloxane of the formula, $R^2SiO_{4-m/2}$ wherein R^2 is a substituted or unsubstituted monovalent hydrocarbon group, about 3 to 25 mole percent of the total R^2 being a vinyl group, and where m is a positive integer from 1.9 to 2.3, and having a viscosity of from about 5 to 10,000 centistokes at 25° C;

c. 10 to 80 parts by weight of an allyl ester of a polybasic acid;

d. 3 to 20 parts by weight of an aliphatic acid salt of a metal; and

e. 0.2 to 20 parts by weight of a silane compound expressed by a general formula, $R^3Si(OR^4)_3$ wherein R^3 is an unsaturated hydrocarbon group and R^4 is a member selected from the group consisting of a methyl group, an ethyl group, a β-methoxyethyl group and a β-ethoxyethyl group, and partially hydrolyzed products thereof.

4,064,314

WEATHER-RESISTANT TRANSPARENT COMPOSITE FILM

Eugene L. McKenzie, North St. Paul, Minn., assignor to Minnesota Mining and Manufacturing Company, St. Paul, Minn.

Filed Apr. 16, 1975, Ser. No. 568,474

Int. Cl.[2] B32B *27/36*

U.S. Cl. 428—483 **8 Claims**

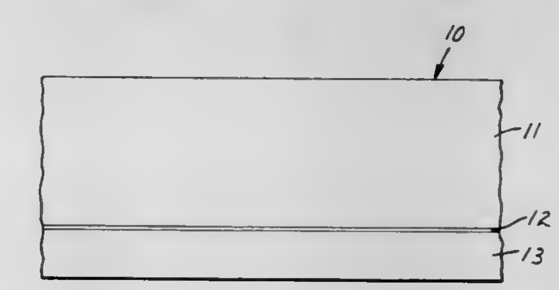

1. A transparent composite film useful as an inexpensive, nonbrittle, outdoor-facing window pane comprising

a. a continuous transparent high-tensile-strength oriented polymeric support film comprising a linear oriented crystalline heat-set polyester polymer;

b. a continuous transparent weather-resistant oriented polymethylmethacrylate film; and

c. a transparent adhesive layer disposed between said support and weather-resistant films to laminate the films together.

4,064,315

MALEIC ANHYDRIDE-MODIFIED POLYMER LAGER COATED WITH POLYMERIC COMPOSITION DERIVED FROM VINYLIDENE CHLORIDE

David A. Bivans, Macedon, and Gary L. Duncan, Pittsford, both of N.Y., assignors to Mobil Oil Corporation, New York, N.Y.

Continuation of Ser. No. 504,572, Sept. 9, 1974, abandoned. This application Aug. 9, 1976, Ser. No. 712,628

Int. Cl.[2] B32B *27/08;* **C08L** *23/14*

U.S. Cl. 428—518 **3 Claims**

1. A composite consisting of a coated polypropylene film wherein the coating consists of a multipolymer formed from about 80% to about 90% by weight of vinylidene chloride and from about 20% to about 10% by weight of at least one other comonomer; said polypropylene film consisting of a layer formed from a blended mixture of from about 90% to about 99% by weight of isotactic polypropylene and from about 10% to about 1% by weight of a maleic anhydride-modified ethylene, propylene or butene polymer.

4,064,316
PROCESS OF DENATURING LEAD PAINTED SURFACES
Thomas Haley Curtis, Lithonia, Ga., assignor to Camco Paints, Inc., Decatur, Ga.
Filed Jan. 26, 1976, Ser. No. 652,163
Int. Cl.² B32B *9/00*
U.S. Cl. 428—522 **3 Claims**

1. A process of deterring humans from ingesting lead-base paint chips from interior surfaces with an accumulation of lead paint which comprises coating such surface with a vinyl acetate-acrylic copolymer emulsion water base paint containing a deterrent which consists of from 0.001% to 0.5% by weight benzyldiethyl (2,6-xylylcarbamoyl methyl) ammonium benzoate and from 0.01% to 2.0% by weight pepper extract.

4,064,317
FLAME-RESISTANT PLASTER BOARD AND ITS MANUFACTURE
Kozo Fukuba, and Minematsu Miyazaki, both of Niihama, Japan, assignors to Sumitomo Chemical Company, Limited, Osaka, Japan
Filed Feb. 4, 1976, Ser. No. 655,134
Claims priority, application Japan, Feb. 5, 1975, 50-15810; Dec. 19, 1975, 50-152392
Int. Cl.² B32B *9/04*
U.S. Cl. 428—537 **8 Claims**

1. A flame-resistant plaster board, characterized in that the board paper constituting the outside of said plaster board contains a mixture of sodium formate and calcium formate, and a penetrating agent.

4,064,318
CONCENTRATED POLYMER EMULSION AS A CLEANER AND LUBRICANT
Anthony J. Sadowski, Chicago, Ill., assignor to Nalco Chemical Company, Oak Brook, Ill.
Continuation-in-part of Ser. No. 420,195, Nov. 28, 1973, abandoned. This application Feb. 27, 1976, Ser. No. 662,093
Int. Cl.² F16N *15/00*
U.S. Cl. 428—543 **2 Claims**

1. The method of conditioning garbage prior to treatment of said garbage with a garbage disposal unit which comprises applying to said garbage before entry into said garbage disposal an effective lubricating amount of a concentrate water-in-oil emulsion consisting of:

A. An aqueous phase ranging between 30 and 95% by weight of the emulsion which contains a water-soluble vinyl addition polymer having a concentration between 20 and 50% by weight of the emulsion, said polymer having a particle size within the range of 2 millimicrons to 5 microns

B. An inert hydrophobic liquid hydrocarbon phase ranging between 5 and 70% by weight of the emulsion containing a water-in-oil emulsifying agent having a concentration between 0.1 and 21% by weight of the emulsion.

4,064,319
UPSET HEAD AT A HIGH-STRENGTH TENSION WIRE AND METHOD FOR THE PRODUCTION THEREOF
Hans Rudolf Siegwart, Kilchberg, and Dietmar Leeb, Zurich, both of Switzerland, assignors to Bureau BBR Ltd., Zurich, Switzerland
Filed Jan. 22, 1976, Ser. No. 651,292
Claims priority, application Switzerland, Feb. 7, 1975, 1504/75
Int. Cl.² B21C *37/04;* **B21F** *5/00*
U.S. Cl. 428—602 **3 Claims**

1. A tension wire, of high tensile strength steel provided with an upset head, said head comprising a free end and a supporting seating surface situated at a transition point between the upset head and the remaining part of the wire, said head having a maximum diameter which is located within the third of the height of the head situated closest to the supporting seating surface, the diameter of the head at the free end being

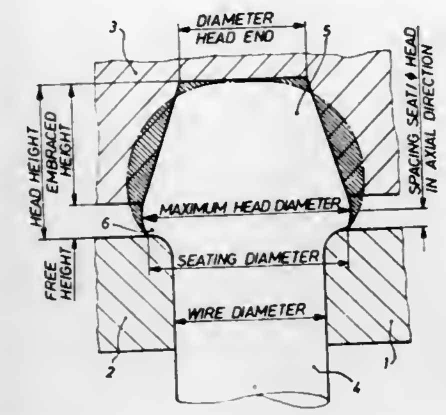

at most equal to the wire diameter, and the ratio of the wire diameter to the head height being in the order of 1.2 to 0.8.

4,064,320
CHROMATED ELECTRO-GALVANIZED STEEL SHEET EXCELLENT IN CORROSION RESISTANCE AND PROCESS FOR MANUFACTURING SAME
Takeshi Adaniya, and Masaru Ohmura, both of Fukuyama, Japan, assignors to Nippon Kokan Kabushiki Kaisha, Tokyo, Japan
Filed Mar. 1, 1976, Ser. No. 662,618
Claims priority, application Japan, Mar. 26, 1975, 50-35289, 50-35290, Jan. 9, 1976, 51-1588
Int. Cl.² B23P *3/00;* **C25D** *5/10, 5/48*
U.S. Cl. 428—632 **21 Claims**

1. A process for manufacturing a chromated electrogalvanized steel sheet which comprises subjecting a steel sheet to an electro-galvanizing treatment, and then subjecting said electro-galvanized steel sheet to a chromate treatment, characterized by:

subjecting a steel sheet to a first electro-galvanizing treatment under galvanizing conditions in an acidic galvanizing bath selected from the group consisting of:

A. an acidic galvanizing bath in which zinc is the sole galvanizing metal;

B. galvanizing bath (A) containing an additive capable of improving the bare corrosion resistance of a galvanizing layer formed on the surface of said steel sheet, said additive consisting essentially of 50 - 10,000 ppm Co; and

C. galvanizing bath (B) containing at least one additive having said capability and being selected from the group consisting of:

i. Cr^{3+} 50 - 700 ppm,

ii. Cr^{6+} 50 - 500 ppm,

iii. Cr^{3+} and Cr^{6+} 50 - 700 ppm, in which the maximum of Cr^{6+} is 500 ppm,

and

iv. Zr 10 - 2,500 ppm,

to form on the surface of said steel sheet a first galvanized layer which is excellent in bare corrosion resistance; then, subjecting said electro-galvanized steel sheet with said first galvanized layer formed thereon to a second electro-galvanizing treatment under galvanizing conditions in an additive-containing Zn-based acidic galvanizing bath the additive thereof being capable of improving the adaptability of a galvanized layer to chromating and consisting essentially of at least one selected from the group consisting of:

a. Cr^{3+} 50 - 700 ppm,

b. Cr^{6+} 50 - 500 ppm,

c. Cr^{3+} and Cr^{6+} 50 - 700 ppm, in which the maximum of Cr^{6+} is 500 ppm,

d. Sn 10 - 5,000 ppm, and

e. In 10 - 3,000 ppm,

to form on said first galvanized layer a second galvanized layer in an amount of at least 0.2 g/m², said second galvanized layer being excellent in adaptability to chromating; and then, subjecting said electro-galvanized steel sheet with said first and said second galvanized layers formed thereon to a chromate treatment to form a chromate film on said second galvanized layer.

14. A chromated electro-galvanized steel sheet characterized by comprising:

a steel sheet; a first electro-galvanized layer, serving as the main layer, formed on the surface of said steel sheet, selected from the group consisting of:

A. an electro-galvanized layer consisting essentially of Zn;

B. a Zn-based electro-galvanized layer consisting essentially of zinc and at least one of the oxides and the hydroxides of Co; and

C. a Zn-based electro-galvanized layer consisting essentially of zinc and at least one of the oxides and the hydroxides of Co and at least one of the oxides and the hydroxides of Cr and Zr;

a second Zn-based electro-galvanized layer in an amount of at least 0.2 g/m², the said second layer consisting essentially of zinc and at least one oxide or hydroxide of a metal consisting essentially of a metal selected from the group consisting of Cr, Sn and In, formed on said first electro-galvanized layer; and a chromate film formed on said second electro-galvanized layer.

4,064,321
FUEL CELL WITH ELECTRODES SEPARATED BY INTERMEDIATE ELEMENTS
Alain Grehier, Paris, France, assignor to Institut Francais du Petrole, France
Filed Feb. 12, 1976, Ser. No. 657,531
Claims priority, application France, Feb. 25, 1975, 75.05824
Int. Cl.² H01M *8/02*
U.S. Cl. 429—34 **13 Claims**

1. A fuel cell comprising a block made of a stack of electrodes delimiting between each other compartments of substantial thickness for containing products necessary to the operation of the fuel cell, and an intermediate element located in at least one of said compartments, wherein the volume of said element is such as to leave only a minimum free volume for said product in said compartment, said intermediate element being spaced from the electrodes so that a limited separation space is provided over substantially the whole area of said respective electrodes, and wherein said intermediate element is provided with perforations connecting said limited separation spaces on both sides of said intermediate element.

4,064,322
ELECTROLYTE RESERVOIR FOR A FUEL CELL
Calvin L. Bushnell, Glastonbury, and Harold Russell Kunz, Vernon, both of Conn., assignors to United Technologies Corporation, Hartford, Conn.
Filed Sept. 1, 1976, Ser. No. 719,876
Int. Cl.² H01M *8/02*
U.S. Cl. 429—41 **10 Claims**

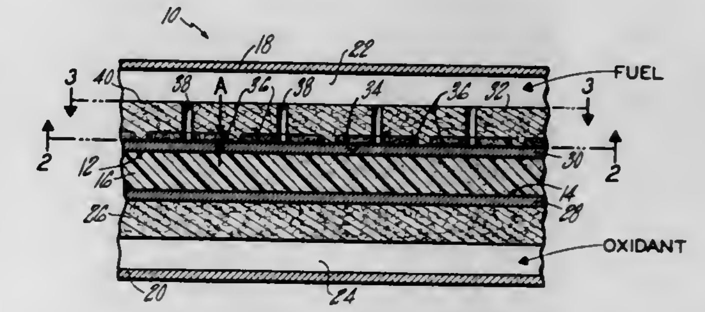

1. An electrolyte reservoir layer for use adjacent the catalyst layer of a fuel cell, said reservoir layer being porous throughout and including a catalyst facing surface and a non-catalyst facing surface, said catalyst facing surface including first impregnations of hydrophobic material to a shallow depth over a major portion of its area, said catalyst facing surface also including uniformly distributed areas not impregnated with hydrophobic material, said reservoir layer also including uniformly distributed non-electrolyte retaining portions leading from said non-catalyst facing surface to said impregnations of hydrophobic material at said other surface, said non-electrolyte retaining portions comprising only a small portion of the volume of said reservoir layer, said reservoir layer being hydrophilic in all portions other than said non-electrolyte retaining portions and said first impregnations.

4,064,323
BATTERY HAVING VENTING WRAPPER COMPRISING GAS PREVIOUS PLASTIC LAYER AND FRACTURED GAS IMPERVIOUS LAYER
Terry Glen Messing, Verona, Wis., assignor to ESB Incorporated, Philadelphia, Pa.
Filed Oct. 26, 1976, Ser. No. 735,582
Int. Cl.² H01M *2/12*
U.S. Cl. 429—86 **9 Claims**

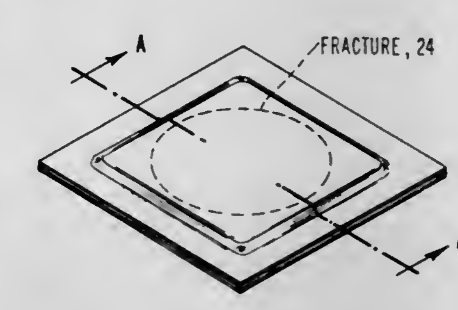

1. An improvement in a battery which is at least partially enclosed by a wrapper comprising a composite of

a. a plastic layer which is pervious to gases contained within the battery, and

b. a metal foil which is impervious to gases contained within the battery,

wherein the improvement provides a gas-venting system for the battery, the improvement comprising a fracture in the gas impervious layer which fracture is wide enough to permit the transmission of gases between the interior and exterior of the wrapper, the plastic layer and the metal foil being adhered between their confronting faces except at the area of the fracture to prevent lateral transmission of gases between the plastic layer and the metal foil.

4,064,324
METAL-HALOGENELECTROCHEMICAL CELL
Daniel J. Eustace, Chatham, N.J., assignor to Exxon Research & Engineering Co., Linden, N.J.
Filed Apr. 7, 1976, Ser. No. 674,584
Int. Cl.² H01M *6/24*
U.S. Cl. 429—101 **10 Claims**

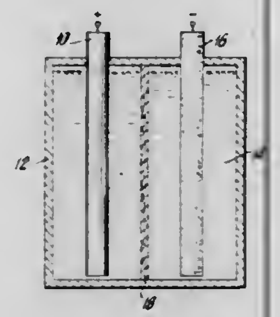

1. In an electrochemical cell having a metal anode wherein the metal is selected from zinc and cadmium; a bromine cathode; an aqueous electrolyte containing a metal bromide, the metal bromide having the same metal as the metal of the anode, the improvement comprising: a bromine complexing agent in said aqueous metal bromide electrolyte, said complexing agent consisting solely of a quaternary ammonium salt of an N-organo substituted alpha amino acid having the following formulas:

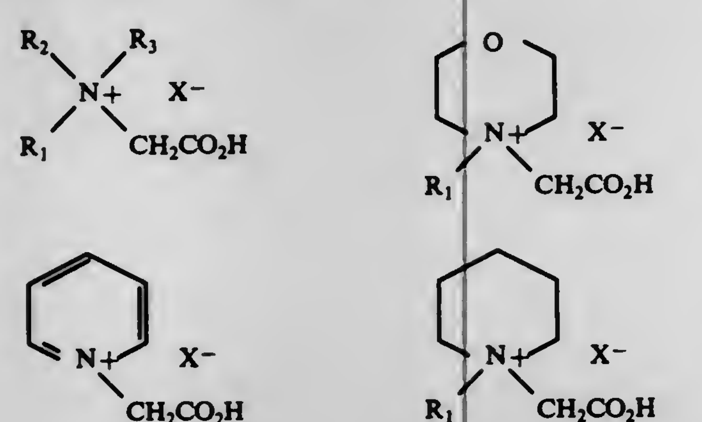

wherein X^{31} is a halide anion selected from the group consisting of chloride and bromide ions, R_1, R_2, and R_3 are alkyl and haloalkyl groups of from 1 to 8 carbon atoms, which quaternary ammonium salt is soluble in water and forms a cathodically active halogen complex which is a substantially water immiscible liquid at temperatures in the range of from about 10° to about 60° C.

10. An aqueous zinc-bromine cell comprising: a zinc anode; a cathodically active bromine complex; an inert electrode; and an aqueous zinc bromide electrolyte said cathodically active bromine complex being formed solely between bromine and a water soluble quaternary ammonium salt of an N-organo substituted amino acid selected from those having the general formulas:

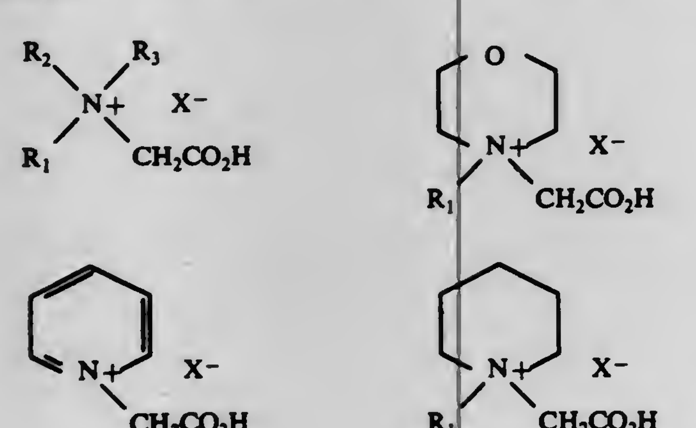

wherein X— is a halide ion selected from the group consisting of chloride and bromide ions, R_1, R_2 and R_3 are alkyl or haloalkyl groups of from 1 to 8 carbon atoms, and wherein said bromine complex of said N-organo substituted amino acid salt is a substantially water immiscible complex which is a liquid at temperatures ranging from about 10° to about 60° C.

4,064,325
ELECTRIC STORAGE BATTERIES
Morten Grenness, Ramsbottom, England, assignor to Chloride Group Limited, London, England
Filed Feb. 10, 1976, Ser. No. 656,982
Claims priority, application United Kingdom, Feb. 14, 1975, 6387/75
Int. Cl.² H01M *4/36*
U.S. Cl. 429—104 **4 Claims**

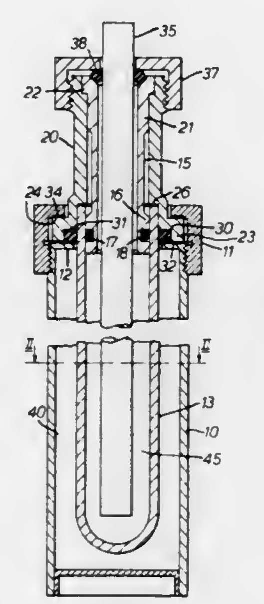

1. An electrochemical cell in which a negative electrode reactant alkali metal is located in electrical contact with a negative electrode at a negative electrode region, and is separated from a positive electrode region by a ceramic separator, which has a conductivity to cations of said negative electrode alkali metal, at a temperature in the range 150° C to 350° C, which is greater than its electrical conductivity, the positive electrode region containing positive electrode reactant material comprising at least one metal salt, the positive electrode material having a melting point not greater than 350° C and a boiling point of at least 100° C, said positive electrode material being in conductive contact with said separator, a positive current collecting electrode being located in electrical contact with said positive electrode material, the positive electrode reactant material comprising a mixture which in the fully charged state comprises 33 to 50 mole % of aluminum chloride, 50 to 33 mole % of iron (III) chloride, the balance of the positive electrode material being alkali metal chloride, the alkali metal being the same as the reactant at the negative electrode, the cell being provided with means for maintaining it at an operating temperature at which the negative electrode metal and the positive electrode material are both in the liquid phase; wherein the voltage during discharge is about 3 volts for more than 50% of its total discharge period and wherein during the last stages of said discharge period the voltage drops rapidly.

4. A method of generating electrical energy electrochemically which comprises maintaining in a molten condition an alkali metal negative electrode reactant, and a positive electrode reactant which is electrochemically reversibly reactive with cations of said metal negative electrode reactant and is in contact with a positive electrode, said negative electrode reactant and positive electrode reactant being separated from each other by a separator material which separates the negative electrode reactant and its half cell reactions from the positive electrode reactant and its half cell reactions, the separator material being ionically conductive with respect to cations of said metal negative electrode reactant but essentially non conductive with respect to electrons, anions and other cations when a difference of electrical potential is provided between the negative electrode reactant and the positive electrode, and electrically connecting the metal negative electrode reactant and the positive electrode by a conductor forming part of an electrical circuit, and in which the positive electrode reactant material comprises a mixture which in the fully charged state comprises 33 to 50 mole % of aluminium chloride, 50 to 33 mole % of iron (III) chloride, the balance of the positive electrode material being alkali metal chloride, the alkali metal being the same as the reactant at the negative electrode.

4,064,326
PHOTO-ELECTROCHEMICAL CELL CONTAINING CHALCOGENIDE REDOX COUPLE AND HAVING STORAGE CAPABILITY
Joost Manassen; Gary Hodes, and David Ferdinand Cahen, all of Rehovot, Israel, assignors to Yeda Research & Development Co. Ltd., Rehovot, Israel
Filed Feb. 23, 1977, Ser. No. 771,317
Claims priority, application Israel, Mar. 3, 1976, 49147
Int. Cl.² H01M *6/36*
U.S. Cl. 429—111 **18 Claims**

1. A photo-electrochemical cell comprising as the photoactive electrode a semi-conductor of n- or p-type of suitable bandgap for efficient utilization of solar energy in combination with an additional electrode and an electrolyte comprising a chalcogenide redox couple chosen from S/S−−, Se/Se−−, and Te/Te−−;

11. A cell according to claim 1, wherein the additional electrode is a storage electrode adapted to supply any part of the converted energy as electricity when the photoactive electrode is not illuminated.

4,064,327
ALUMINUM-CHLORINE THERMAL BATTERY
Lowell A. King, Colorado Springs, Colo.; George D. Brabson, Jr., Albuquerque, N. Mex.; John K. Erbacher, USAF Academy, Colo.; David W. Seegmiller, London, England; Armand A. Fannin, Jr., USAF Academy, Colo., and John T. Viola, Washington, D.C., assignors to The United States of America as represented by the Secretary of the Air Force, Washington, D.C.
Filed Feb. 9, 1977, Ser. No. 767,233
Int. Cl.² H01M *6/36*
U.S. Cl. 429—112 **1 Claim**

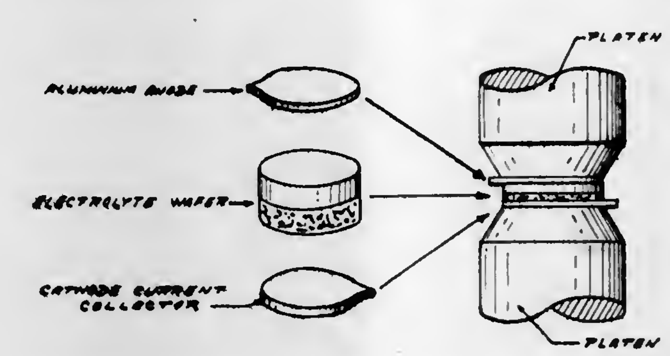

1. An aluminum-chloride electrochemical cell comprising:
a. an anode composed of an aluminum metal sheet;
b. a cathode composed of chlorine as an electroactive material in contact with a tungsten metal sheet which serves as a cathodic current collector; and
c. a two-layered, pelletized, electrolyte wafer sandwiched between said anode and said cathode, said wafer having both layers composed of a sodium chloride saturated equimolar mixture of aluminum chloride and sodium chloride immobilized in silicon dioxide and an amount of powdered graphite only in that layer adjacent to said cathode to act as a cathodic site, and an electronic conductor leading from the wafer interior to the current collector.

4,064,328
AUXILIARY DUAL BATTERY TERMINAL
Charles H. Allen, Dallas, Tex., assignor to Batteries Unlimited, Inc., Dallas, Tex.
Filed Jan. 31, 1977, Ser. No. 764,467
Int. Cl.² H01M *2/30*
U.S. Cl. 429—121 **10 Claims**

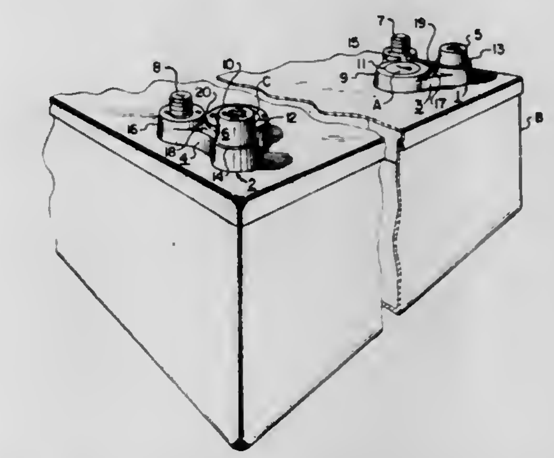

1. An auxiliary dual post and stud battery terminal for installation on a storage battery having a terminal post projecting from a surface thereof comprising
- a generally flat body of weldable conductive material,
- a collar adjacent one margin of the body and having its opening generally complementary to the projecting terminal post of the battery,
- a terminal post upstanding from said body in spaced relation to the collar and generally complementary to said battery terminal post, and
- a screwthreaded stud upstanding from said body in spaced relation to its collar and post.

4,064,329
CELL SEALING MEANS
Denis Naylor, Crawley, England, assignor to Mallory Batteries Ltd., Crawley, England
Filed July 23, 1975, Ser. No. 598,487
Claims priority, application United Kingdom, July 29, 1974, 33441/74
Int. Cl.² H01M *2/08*
U.S. Cl. 429—174 **7 Claims**

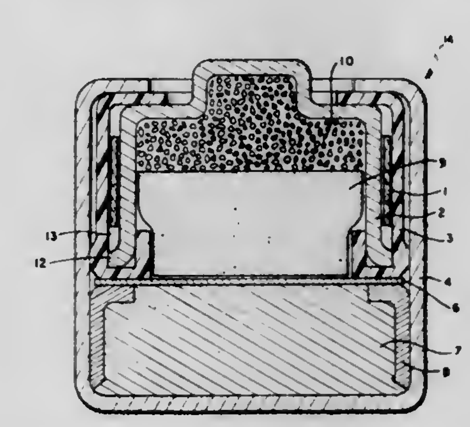

1. An electrical device comprising a container with an opening in one end thereof; a mobile fluid electrolyte in said container; a single top closure member at the open end of the container said closure member extending for a substantial distance within said container in spaced relation thereto; a

resilient sealing grommet in spaced relation to and encircling the closure member to form an enclosed annular space between said grommet and said closure member; said sealing grommet being compressed between said closure member and the inner wall of said container at the upper end of said grommet to complete the closing of the open end of said container; whereby two potential electrolyte leakage paths exist, a first path between said grommet and said closure member which includes said annular space and a second between said grommet and the interior of said container; means to inhibit electrolyte leakage along said second path between said grommet and the interior of said container whereby electrolyte leakage is directed to said first path between said grommet and said closure member; and said first path having contained therein, in said annular space, a body of non-reactive material capable of absorbing said electrolyte.

4,064,330

CARBON ELECTRODE ASSEMBLY FOR LITHIUM FUSED SALT BATTERY

Fredrick William Gaines, Jr., and Ethel May Gaines, both of 6979 N. Meadow Drive, Painesville, Ohio 44077

Filed Sept. 1, 1976, Ser. No. 719,564

Int. Cl.² H01M *4/58*

U.S. Cl. 429—218 **8 Claims**

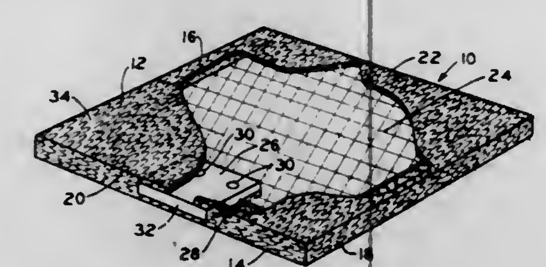

1. An electrode assembly for use in a lithiumtype fused salt battery comprising:

an electrical current collector member composed of graphitic carbon;

an electrically conductive header member in electrical contact with said current collector for making electrical contact therewith said header being composed of graphitic carbon; and

a surface layer of porous carbon bonded to and essentially encasing the current collector member, said porous carbon, having an apparent density ranging from about 0.7 to about 1.0 grams per cubic centimeter and being capable of absorbing lithium ions.

4,064,331

METHOD FOR THE PREPARATION OF IRON ELECTRODES

Jesse T. Patton, Jeannette, and Alois Langer, Pittsburgh, both of Pa., assignors to Westinghouse Electric Corporation, Pittsburgh, Pa.

Continuation of Ser. No. 451,247, March 14, 1974, abandoned. This application Feb. 13, 1976, Ser. No. 657,910

Int. Cl.² H01M *4/52*

U.S. Cl. 429—221 **6 Claims**

1. A method for the preparation of an iron electrode comprising mixing a particulate iron selected from the group consisting of an iron powder, an iron oxide and an iron hydroxide with an organic moldable resin, carbonizable at the temperatures of at least 950° C., wherein the weight ratio of particulate iron to resin is from about 1:1 to about 8:1, and a small effective amount of a carbon black; molding said mixture into an electrode shape, and slowly heating said molded shape to at least 950° C. in an inert atmosphere, to carbonize said organic resin into a porous matrix and form a mechanically strong, porous electrode; wherein the amount of carbon black present is effective to maintain conductivity between the matrix and the iron particles after carbonization.

4,064,332

METHOD OF MANUFACTURING A NICKEL HYDROXIDE ELECTRODE

Erik Wiktor Elfwing, Paskallavik, and Lars Harry Swenne, Oskarshamn, both of Sweden, assignors to Nife Jungner AB, Sweden

Filed Nov. 12, 1976, Ser. No. 741,498

Claims priority, application Sweden, Dec. 9, 1975, 7513837

Int. Cl.² H01M *4/32*

U.S. Cl. 429—223 **14 Claims**

1. In the method of manufacturing a nickel hydroxide electrode having a sintered, porous nickel structure by forming electrochemically active material in the pores of the structure through activation of nickel from the structure, the improvement which comprises reacting the nickel of the structure with a gas which forms a nickel salt in situ capable of reacting with an alkali metal hydroxide to form nickel hydroxide and then reacting said salt with an alkali metal hydroxide to form nickel hydroxide in the pores of the nickel of said structure.

13. A porous nickel hydroxide electrode produced by reacting a sintered, porous nickel structure with a gas which forms a nickel salt in situ capable of reacting with an alkali metal hydroxide to form nickel hydroxide, then reacting said salt with an alkali metal hydroxide to form a porous nickel hydroxide structure, all of the nickel hydroxide in said porous nickel hydroxide structure having been formed from the nickel in said sintered, porous nickel structure, and then forming said porous nickel hydroxide structure into an electrode.

4,064,333

PROCESS FOR THE HIGH MOLECULAR WEIGHT POLYMERS OF DIALLYLDIMETHYLAMMONIUM FLUORIDE POLYMERS DIRECTLY FROM DIALLYLDIMETHYLAMMONIUM FLUORIDE MONOMER

Robert Rabinowitz, Stamford, and Richard Parke Welcher, Old Greenwich, both of Conn., assignors to American Cyanamid Company, Stamford, Conn.

Filed Mar. 16, 1977, Ser. No. 778,000

Int. Cl.² C08L *47/00*

U.S. Cl. 526—77 **6 Claims**

1. A process for preparing a polymer of diallyldimethylammonium fluoride having an intrinsic viscosity of at least about 0.1 deciliter/gram which comprises: providing an aqueous solution of about 10–70 weight percent of a substantially pure diallyldimethylammonium fluoride; purging said solution to remove oxygen therefrom; initiating polymerization of the purged monomer solution by addition thereto of a catalytic amount of a free-radical catalyst; conducting the polymerization reaction at a temperature of at least about 50° C. **until a polymer of an intrinsic viscosity of at least about** 0.1 deciliters/-gram is obtained; and thereafter recovering the polymer thus prepared.

4,064,334

PROCESS FOR PREPARING POLYOLEFINS

Nobuyuki Kuroda; Toru Nakamura, both of Yokohama; Takeichi Shiraishi; Kazuo Matsuura, both of Kawasaki, and Mituji Miyoshi, Kanagawa, all of Japan, assignors to Nippon Oil Company Ltd., Tokyo, Japan

Filed July 15, 1976, Ser. No. 705,606

Claims priority, application Japan, Aug. 5, 1975, 50-94721

Int. Cl.² C08F *4/02, 10/02*

U.S. Cl. 526—119 **10 Claims**

1. A process for preparing polyolefins by polymerizing or copolymerizing olefins in the presence of a catalyst comprising a solid component and an organometallic compound component, characterized in that said solid component is obtained by copulverizing

1. a magnesium dihalide
2. a compound represented by the general formula $Al(OR)_mX_{3-m}$ wherein R is alkyl and/or aralkyl having 1 to 20 carbon atoms and may be the same or different, X is halogen and $0<m\leqq 3$,
3. a tetravalent titanium compound, and
4. a trivalent titanium compound being present in a molar ratio with tetravalent titanium compound (3) of from 50:1 to 1:50 and in that said organometallic compound component is a mixture of
5. a trialkylaluminum and
6. a compound represented by the general formula AlR'_nX_{3-n} wherein R' is alkyl having 1 to 10 carbon atoms and may be the same or different, X is halogen and $0<n\leqq 3$, said compound being present in a molar ratio with trialkylaluminum(5) of from 2:1 to 1000:1.

4,064,335

POLYMERS OF NONCONJUGATED 1,4-DIENES

Joginder Lal, Akron, and Paul H. Sandstrom, Tallmadge, both of Ohio, assignors to The Goodyear Tire & Rubber Company, Akron, Ohio

Division of Ser. No. 522,408, Nov. 11, 1974, Pat. No. 3,975,336, which is a continuation-in-part of Ser. No. 360,239, May 14, 1973, abandoned. This application Apr. 15, 1976, Ser. No. 677,475

Int. Cl.² C08F *210/00, 212/00*

U.S. Cl. 526—128 **10 Claims**

1. The method of polymerizing at least one non-conjugated diolefin defined by the formula

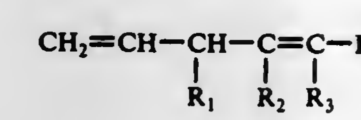

where R_1, R_2 and R_3 are from the group of hydrogen, a lower alkyl group containing up to 4 carbon atoms or an aryl group and R_4 is from the group of a lower alkyl group containing up to 4 carbon atoms or an aryl group, to form homopolymers or interpolymers containing at least 50 mole percent of their repeat units of the structure

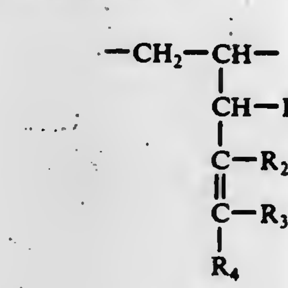

where R_1, R_2, R_3 and R_4 are defined as before, said polymerization being conducted in the presence of a coordination catalyst, comprising a mixture of (A) halides, oxyhalides or alcoholates of titanium and/or vanadium and (B) organoaluminum compounds.

8. The method of polymerizing at least one nonconjugated diolefin defined by the formula

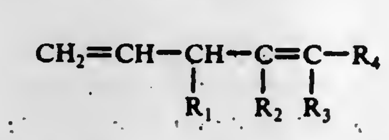

where R_1, R_2 and R_3 are from the group of hydrogen, a lower alkyl group containing up to 4 carbon atoms or an aryl group and R_4 is from the group of a lower alkyl group containing up to 4 carbon atoms or an aryl group, said polymerization being conducted in the presence of a cationic catalyst system.

4,064,336

CATALYST AND METHOD

Yu-Tang Hwang, Clinton, Iowa, assignor to Chemplex Company, Rolling Meadows, Ill.

Filed Nov. 3, 1976, Ser. No. 738,554

Int. Cl.² C08F *4/78, 10/00*

U.S. Cl. 526—172 **41 Claims**

1. A catalyst prepared by dispersing on a finely divided, difficultly reducible, inorganic support of the class consisting of silica, alumina, thoria, zirconia, titania, magnesia, and mixtures thereof an organic nitrogen containing chromium compound essentially of the formula of the class consisting of

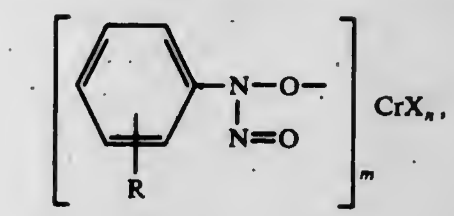

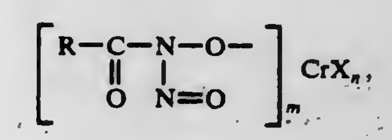

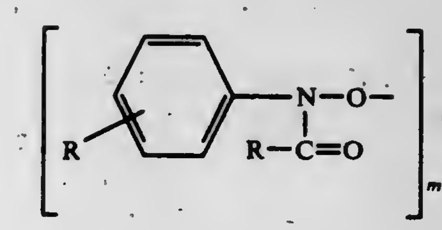

and

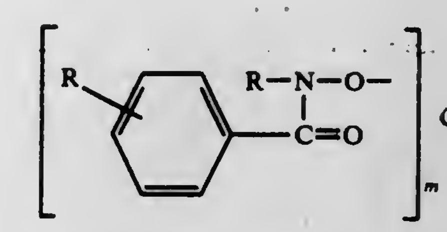

wherein R is individually selected from hydrogen, alkyl, alkenyl, aryl, cycloalkyl, cycloalkenyl, and arylalkyl radicals and combinations of these radicals with each R containing 0–20 carbon atoms and a corresponding valence-satisfying number of hydrogen atoms, m is a whole number of 1 to 3, n is a whole number of 0 to 2, and m plus n is 2 or 3, and X is an inorganic or organic negative group relative to chromium, and activating the resulting mixture by heating to and at an elevated temperature of from about 600°-2000° F. in a non-oxidizing atmosphere.

4,064,337

MIXING OF ORGANOSULFUR MOLECULAR WEIGHT MODIFIER WITH EMULSIFIER FOR EMULSION POLYMERIZATION SYSTEMS

Carl A. Uraneck, and John E. Burleigh, both of Bartlesville, Okla., assignors to Phillips Petroleum Company, Bartlesville, Okla.

Filed Dec. 11, 1972, Ser. No. 314,107

Int. Cl.² C08F *12/08, 36/06*

U.S. Cl. 526—204 **26 Claims**

1. In a process of aqueous emulsion polymerization wherein at least one polymerizable vinyl monomer polymerizable with a free radical initiator is polymerized under aqueous emulsion polymerization conditions in the presence of said free radical initiator, aqueous emulsifier solution, organosulfur compound as molecular weight modifier, and aqueous medium, the steps comprising:

a. admixing at least a portion of said aqueous emulsifier with said organosulfur compound molecular weight modifier and coagitating the resulting admixture sufficiently to increase the regulating index of said modifier to produce a coagitated admixture prior to the introduction thereof into said emulsion polymerization process,

b. admixing said coagitated admixture of said aqueous emulsifier and said organosulfur compound with said polymerizable vinyl monomer and initiator, and

c. polymerizing the resulting polymerization admixture under aqueous emulsion polymerization conditions,

wherein said emulsifier is an anionic or nonionic emulsifier; said organosulfur compound molecular weight modifier is a mercaptan, dialkyl dixanthogen, diaryl disulfide, tetraalkyl thiuram mono- or disulfide, or mercaptothiazole;

and wherein said coagitation sufficient to increase the reactivity of said organosulfur compound as said modifier refers to strong and thorough mixing of organosulfur compound with aqueous emulsifier solution in a manner so as to afford a significant reduction in the particle size of said organosulfur compound in said emulsifier solution, and said coagitation is sufficient to effectuate a significant increase in said regulating index of said organosulfur compound when employed in said emulsion polymerization system.

4,064,338

METHOD FOR PREPARING BIOLOGICALLY ACTIVE COPOLYMERS OF TRIORGANOTIN ACRYLATES

David B. Russell, Westfield, N.J., assignor to M & T Chemicals Inc., Greenwich, Conn.

Filed Sept. 7, 1976, Ser. No. 720,950

Int. Cl.^{2} C08F *2/00, 4/00, 30/04, 230/04*

U.S. Cl. 526—230 **9 Claims**

1. In an improved method for preparing biologically active polymers exhibiting reduced rates of hydrolysis and reduced second order glass transition temperatures by reacting at least one solubilized triorganotin compound of the general formula

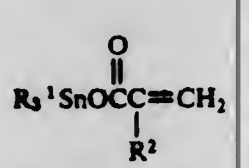

with at least one solubilized monomer of the general formula

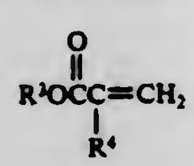

at a temperature from 50° to 100° C. and in the presence of an organic solvent for the monomers and an effective amount of a free radical polymerization initiator, wherein R^1 represents an alkyl radial containing from 1 to 8 carbon atoms, a cyclohexyl or a phenyl radical, R^2 and R^4 are individually selected from hydrogen and methyl radicals and R^3 represents an alkyl radical containing from 1 to 18 carbon atoms, a cyclohexyl or a phenyl radical, the improvement which consists of reacting said monomers in an organic solvent containing from 50 to 100% by volume of at least one liquid aliphatic or cycloaliphatic hydrocarbon containing from 5 to 16 carbon atoms, any remaining portion of said organic solvent consisting essentially of at least one liquid aromatic hydrocarbon.

4,064,339

ANTIBIOTIC AMINOGLYCOSIDES, PROCESSES OF PREPARATION AND PHARMACEUTICAL COMPOSITIONS

Daniel Coussediére, Villejuif, and Jean-Claude Gasc, Bondy, both of France, assignors to Roussel UCLAF, Paris, France

Filed Mar. 11, 1975, Ser. No. 557,310

Claims priority, application France, Mar. 12, 1974, 74.08316

Int. Cl.^{2} C07H *15/22;* **A61K** *31/71*

U.S. Cl. 536—17 **3 Claims**

1. The 4-O-(2',6'diamino 2',6'-didesoxyα, D-glucopy rannosyl) 6-O-(3''-amino 3'',4'',6''-tridesoxy α, D-xylohexopyrranoxyl) 2-desoxy streptamine of the formula:

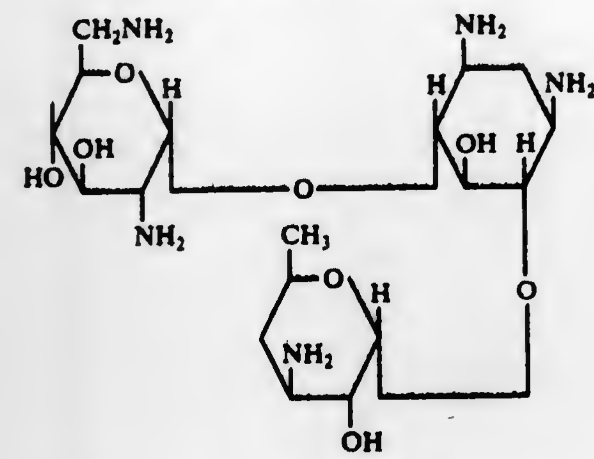

or the pharmaceutically acceptable salts with mineral or organic acids thereof.

4,064,340

NOGAMYCIN AND PROCESS OF PREPARATION

Paul F. Wiley, and Jian L. Johnson, both of Kalamazoo, Mich., assignors to The Upjohn Company, Kalamazoo, Mich.

Filed Dec. 9, 1976, Ser. No. 748,717

Int. Cl.^{2} C07H *15/26*

U.S. Cl. 536—17 **4 Claims**

1. Nogamycin, a compound having the following structure:

III

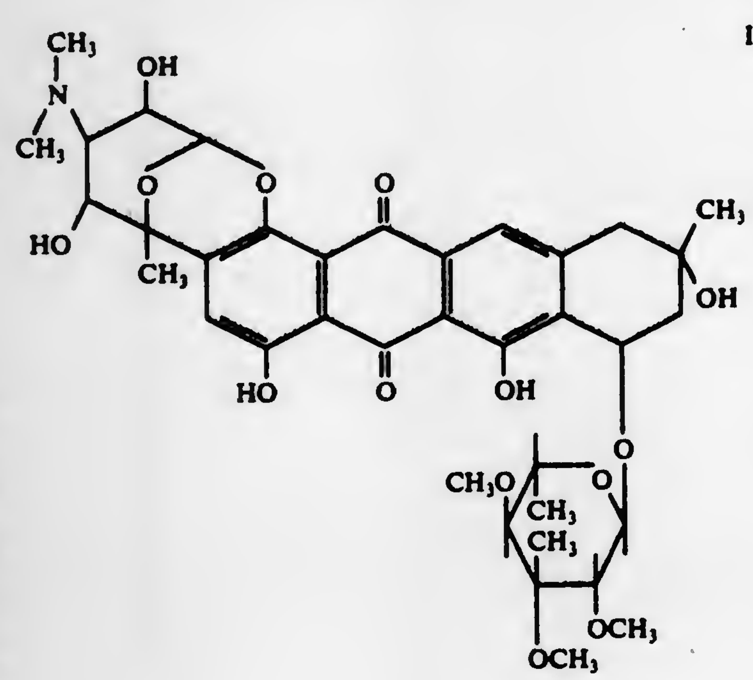

4,064,341

NOGALAMYCINIC ACID AND DERIVATIVES THEREOF

Paul F. Wiley, and Jian L. Johnson, both of Kalamazoo, Mich., assignors to The Upjohn Company, Kalamazoo, Mich.

Filed Dec. 9, 1976, Ser. No. 748,718

Int. Cl.^{2} C07H *15/26*

U.S. Cl. 536—17 **2 Claims**

1. Nogalamycinic acid, a compound having the following structure:

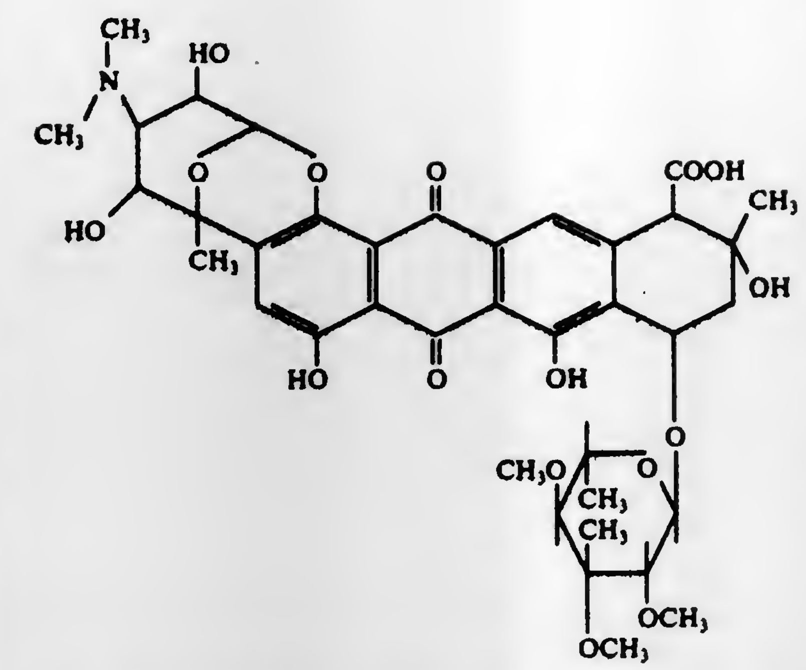

and non-toxic alkali and alkaline earth metal salts thereof.

4,064,342

METHOD OF MANUFACTURING SULFATED CELLULOSE

Daiai Saika, Chiba; Takuma Yanagawa, Tokyo; Masaaki Mizuta, Narashino, and Isamu Kadoya, Tokyo, all of Japan, assignors to Lion Fat and Oil Co., Ltd., Tokyo, Japan

Filed July 24, 1975, Ser. No. 598,732

Claims priority, application Japan, July 30, 1974, 49-87776; July 30, 1974, 49-87777

Int. Cl.^{2} C08B *5/14*

U.S. Cl. 536—59 **9 Claims**

1. In the method of manufacturing sulfated cellulose by sulfating cellulose with Lewis base-SO$_3$ complex in a reaction dispersant, the improvement comprising, prior to sulfation, activating the cellulose for 20 minutes to 5 hours at 30° to 165° C in tertiary amines in an amount of 2 to 50 parts by weight based upon each part by weight of cellulose.

6. In the method of manufacturing sulfated cellulose by sulfating cellulose with Lewis base - SO$_3$ complex in a reaction dispersant, the improvement comprising prior to sulfation, activating the cellulose for 20 minutes to 5 hours at 30° to 165° C in a mixture of tertiary amine and amine hydrochloride, the amount of tertiary amine being between about 3 to 500 parts by weight for each part by weight of cellulose and the proportion of amine hydrochlorides is between about 0.2 to 12 mols per glucose unit of cellulose.

4,064,343

3-HALO CEPHALOSPORINS

Robert R. Chauvette, Indianapolis, Ind., assignor to Eli Lilly and Company, Indianapolis, Ind.

Division of Ser. No. 457,150, April 1, 1974, Pat. No. 3,962,227, which is a continuation-in-part of Ser. No. 338,414, Feb. 23, 1973, abandoned. This application Feb. 9, 1976, Ser. No. 656,240

Int. Cl.^{2} C07D *501/18*

U.S. Cl. 544—16 **8 Claims**

1. A compound of the formula

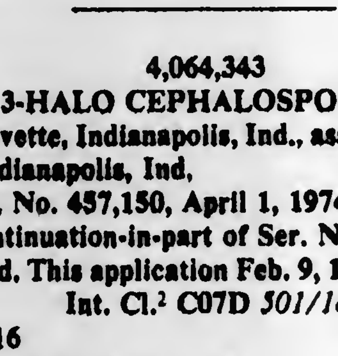

wherein R$_1$ is hydrogen, benzyl, p-methoxybenzyl, p-nitrobenzyl, diphenylmethyl, 2,2,2-trichloroethyl, t-butyl or a pharmaceutically acceptable ester group of the formula II

$$-CH_2-O-\overset{\overset{O}{\|}}{C}-O-C_1-C_4\,\text{alkyl};$$

X is fluoro, chloro, bromo or iodo; and the hydrochloride salts thereof.

4,064,344

7-METHOXY-3-PHOSPHORANYLIDENEMETHYL-CEPHALOSPORINS

Thomas R. Beattie, North Plainfield, and Burton G. Christensen, Metuchen, both of N.J., assignors to Merck & Co., Inc., Rahway, N.J.

Division of Ser. No. 367,256, June 5, 1973, Pat. No. 3,974,151. This application Apr. 14, 1976, Ser. No. 676,771

Int. Cl.^{2} C07D *501/20*

U.S. Cl. 544—21 **7 Claims**

1. A compound of the formula:

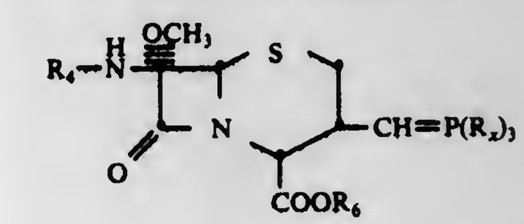

wherein

R$_4$ represents an acyl group of the formula:

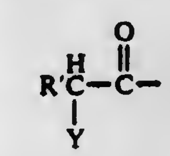

wherein R' is phenyl, thienyl, furyl or thiazolyl; and Y is hydrogen, amino, guanidino, carboxy, or hydroxy;

R$_6$ is hydrogen or a carboxyl blocking group;

R$_x$ is phenyl or substituted phenyl wherein the substituent is selected from the group consisting of halo, nitro, amino, and hydroxyl.

4,064,345

CEPHALOSPORINS DERIVATIVES 7-CYCLIZED α-AMINO-3-HETEROTHIO

Murray A. Kaplan, Syracuse; William J. Gottstein, Fayetteville, and Alphonse P. Granatek, Baldwinsville, all of N.Y., assignors to Bristol-Myers Company, New York, N.Y.

Division of Ser. No. 640,317, Dec. 12, 1975, abandoned. This application Nov. 26, 1976, Ser. No. 745,034

The portion of the term of this patent subsequent to Dec. 6, 1994, has been disclaimed.

Int. Cl.^{2} C07D *501/36*

U.S. Cl. 544—27 **31 Claims**

1. A compound of the formula

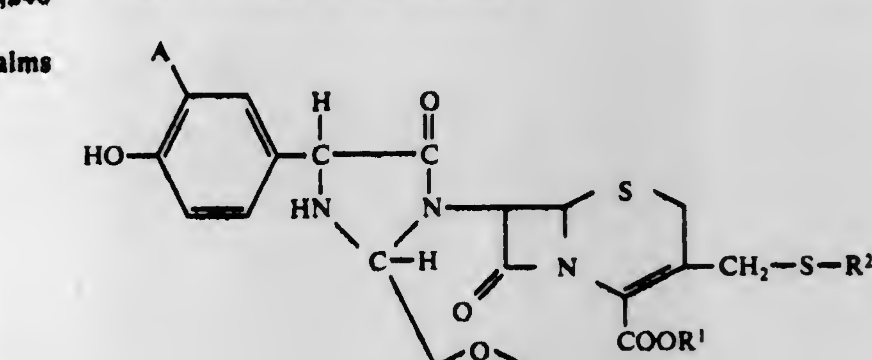

wherein

A is hydrogen, hydroxy, methyl or methoxy,

R^1 is hydrogen, sodium or potassium, and

R^2 is tetrazol-5-yl, 1,2,4-thiadiazol-5-yl, 1,3,4-thiadiazol-2-yl, 1,3,4-oxadiazol-3-yl or 1,2,4-triazol-5-yl, each of such groups being unsubstituted or substituted with one or two lower alkyl groups of one to four carbon atoms.

4,064,346

3-ACETOXYMETHYL-7β-(2-CARBOXY-METHOXYIMINO-2-ARYLACETAMIDO)CEPH-3-EM-4-CARBOXYLIC ACIDS AND SALTS THEREOF

Martin Christopher Cook; Gordon Ian Gregory, both of Chalfont St. Peter, and Janice Bradshaw, Harrow, all of England, assignors to Glaxo Laboratories Limited, Greenford, England

Division of Ser. No. 304,524, Nov. 7, 1972, Pat. No. 3,971,778, which is a continuation-in-part of Ser. No. 252,666, May 12, 1972, abandoned. This application Mar. 18, 1976, Ser. No. 668,247

Claims priority, application United Kingdom, May 14, 1971, 15082/71; Oct. 1, 1971, 45884/71; Oct. 25, 1972, 49255/72

Int. Cl.^{2} C07D *501/32, 501/34*

U.S. Cl. 544—30 **2 Claims**

1. A compound selected from the group consisting of a cephalosporin antibiotic of the formula:

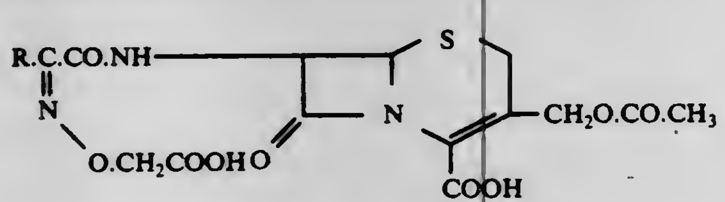

wherein R is phenyl, naphthyl, thienyl, furyl, benzothienyl or benzofuryl and a physiologically acceptable salt thereof.

4,064,347

BIS-BASIC KETONES OF FLUORENE AND FLUORENONE

Robert W. Fleming, Wyoming; Arthur D. Sill, Greenhills; William L. Albrecht, and Stephen W. Horgan, both of Cincinnati, all of Ohio, assignors to Richardson-Merrell Inc., Wilton, Conn.

Continuation of Ser. No. 23,468, March 27, 1970, abandoned. This application Feb. 2, 1973, Ser. No. 328,912

Int. Cl.^{2} C07D *295/10*

U.S. Cl. 544—79 **27 Claims**

1. A compound selected from a base of the formula

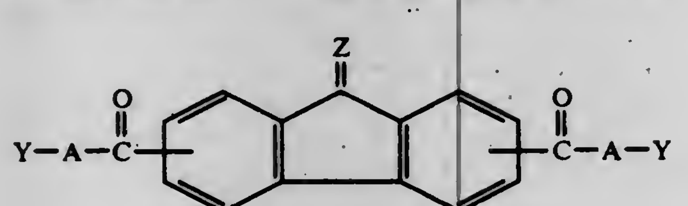

wherein Z is a member selected from the group consisting of oxygen or H_2; each A is a straight or branched alkylene chain of from 1 to 6 carbon atoms; and each Y is a member selected from the group consisting of

A. the group

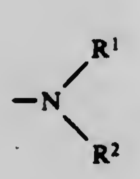

wherein R^1 and R^2 are individually selected from the group consisting of hydrogen, (lower)alkyl having from 1 to 6 carbon atoms, cycloalkyl having from 3 to 6 carbon atoms, alkenyl of from 3 to 6 carbon atoms and having the vinyl unsaturation in other than the 1-position of the alkenyl group;

B. the group

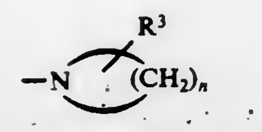

wherein n is a whole integer from 4 to 6, and R^3 is a member selected from the group consisting of hydrogen, (lower)alkyl of 1 to 4 carbon atoms, phenyl, or benzyl and can be linked to any one of the carbon atoms of the heterocyclic group; and

C. the group

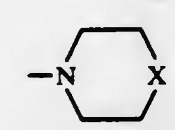

wherein X is a member selected from the group consisting of oxygen or NR^4, and R^4 is hydrogen or (lower)alkyl of from 1 to 4 carbon atoms;

or a pharmaceutically acceptable acid addition salt of said base.

4,064,348

2-CYCLOALKYL-AMINO-2-OXAZOLINES

Norton P. Peet, and Shyam Sunder, both of Midland, Mich., assignors to The Dow Chemical Company, Midland, Mich.

Continuation-in-part of Ser. No. 624,364, Oct. 21, 1975, abandoned. This application Nov. 10, 1976, Ser. No. 740,636

Int. Cl.^{2} C07D *413/04*

U.S. Cl. 544—137 **12 Claims**

1. A 2-amino-2-oxazoline having the formula:

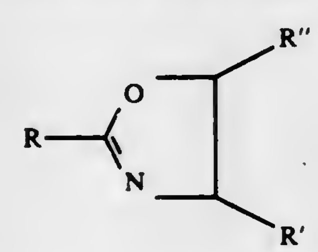

and the pharmaceutically-acceptable salts thereof wherein R is

1-pyrrolidino,
1-piperidino,
1-(2-methyl)piperidino,
1-(3-methyl)piperidino,
1-(4-methyl)piperidino,
4-morpholino, or
1-hexamethyleneimino;

R′ is hydrogen or an alkyl group of from 1 to 4 carbon atoms; and R″ is hydrogen, an alkyl group of from 1 to 4 carbon atoms, or phenyl with the proviso that when R′ is hydrogen R″ is other than hydrogen and when R′ is alkyl R″ is other than alkyl.

4,064,349

NOVEL 2-HYDROXYNAPHTHALENE-1-ALDEHYDES, PROCESS FOR PREPARING THEM AND THEIR USE

Theodor Papenfuhs, Frankfurt am Main, and Heinrich Volk, Bad Vilbel, both of Germany, assignors to Hoechst Aktiengesellschaft, Frankfurt am Main, Germany

Filed July 22, 1976, Ser. No. 707,751

Claims priority, application Germany, July 30, 1975, 2533960

Int. Cl.^{2} C07C *69/76*

U.S. Cl. 560—56 **4 Claims**

1. A compound of the formula

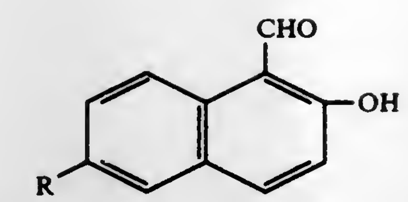

in which R is carboxy or carboxylic acid-alkylester of from 1 to 4 carbon atoms in the alkyl group.

4,064,350

15,16-DIHYDROXYPROSTAGLANDINS

Paul W. Collins, Deerfield, and Raphael Pappo, Skokie, both of Ill., assignors to G. D. Searle & Co., Chicago, Ill.

Filed Nov. 22, 1976, Ser. No. 744,070

Int. Cl.^{2} C07C *177/00*

U.S. Cl. 560—121 **4 Claims**

1. A compound of the formula

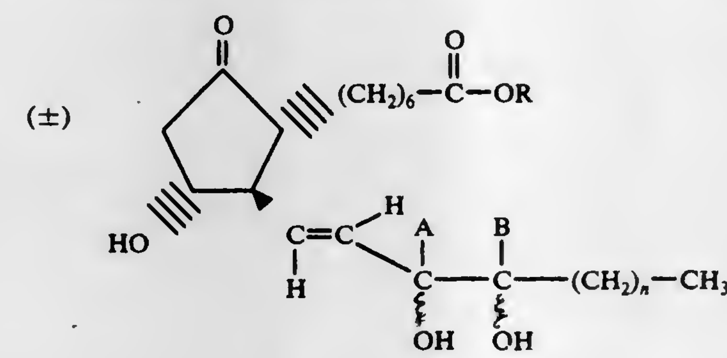

wherein one of A and B is methyl and the other is hydrogen, the wavy line represents R or S stereochemistry, n is 2 to 5, and R is hydrogen or lower alkyl having 1–7 carbon atoms.

4,064,351

9-OXO-15

ε-HYDROXY-20-ALKYLIDENEPROST-13(TRANS)-ENOIC ACID DERIVATIVES

Kiyoshi Sakai; Koichi Kojima; Junya Ide, and Shinsaku Kobayashi, all of Tokyo, Japan, assignors to Sankyo Company Limited, Tokyo, Japan

Continuation of Ser. No. 611,306, Sept. 8, 1975, abandoned. This application Dec. 22, 1976, Ser. No. 753,277

Claims priority, application Japan, Sept. 19, 1974, 49-108143; May 21, 1975, 50-60520

Int. Cl.^{2} C07C *177/00*

U.S. Cl. 560—121 **8 Claims**

1. Prostanoic acid derivative having the formula

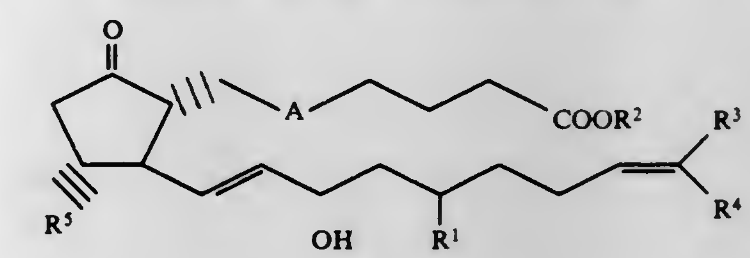

wherein A represents ethylene group or cis-vinylene group, R^1 and R^2 may be the same or different and each represents hydrogen atom or an alkyl group having 1 – 3 carbon atoms, R^3 and R^4 may be the same or different and each represents an alkyl group having 1 – 3 carbon atoms and R^5 represents hydroxy group and the pharamaceutically acceptable salts thereof.

4,064,352
ELECTRON BEAM EVAPORATOR HAVING BEAM SPOT CONTROL
Joseph K. Mann, Palo Alto, Calif., assignor to Varian Associates, Inc., Palo Alto, Calif.
Filed Feb. 17, 1976, Ser. No. 658,205
Int. Cl.² H01J *37/305*
U.S. Cl. 13—31 **9 Claims**

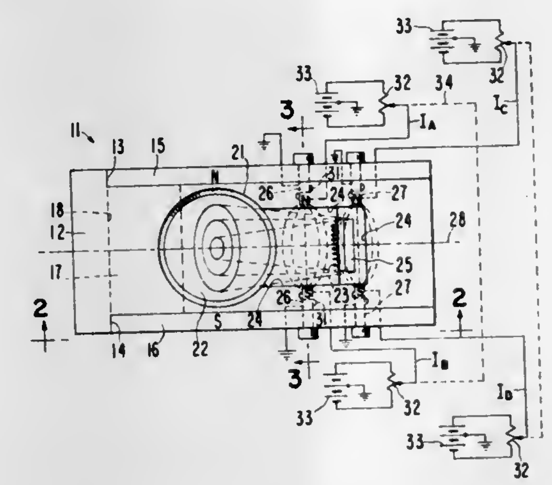

1. In an electron beam heater:
electron gun means for foming and projecting a beam of electrons over a selectable arucate beam path to a target material for heating thereof;
magnetic beam steering and focusing means having a pair of main pole piece structures on opposite sides of the arcuate beam path for producing a beam focusing main magnetic field having a substantial vector component at right angles to a midplane between the pole piece structures and containing the arcuate beam path to produce bending of the beam into the arcuate beam path; and
said magnetic beam steering and focusing means including, a first pair of auxiliary pole piece portions extending toward each other from said main pole piece structure and from opposite sides of said midplane so as to produce a localized magnetic lens to provide a force on the beam generally in the region of the gap between the inner free ends of said first auxiliary pole piece portions for control of the beam spot at the target, and a second pair of auxiliary pole piece portions extending toward each other from said main pole piece structure on opposite sides of said midplane of the arcuate beam so as to produce a second localized magnetic lens to provide a second force on said beam generally in the region of the gap between the inner free ends of said second auxiliary pole piece portions for control of the beam spot at the target.

4,064,353
GAS INSULATED TRANSMISSION LINE WITH PARTICLE TRAP
Philip C. Bolin, Northborough, Mass., assignor to Westinghouse Electric Corporation, Pittsburgh, Pa.
Filed Sept. 15, 1976, Ser. No. 723,270
Int. Cl.² H01B *9/00*
U.S. Cl. 174—14 R **10 Claims**

1. A gas insulated transmission line comprising:
an outer sheath at low potential;
an inner conductor disposed within said outer sheath, paid inner conductor being at high potential with respect to said outer sheath;
an insulating gas disposed within said outer sheath intermediate said outer sheath and said inner conductor;
means for insulatably supporting said inner conductor within said outer sheath; and
particle trapping means disposed within said outer sheath for entrapping particles present within said outer sheath comprising;
an apertured electrode positioned adjacent to, and electrically coupled to, the interior surface of said outer sheath, said electrode and said outer sheath defining a region of low electric field for entrapping particles; and

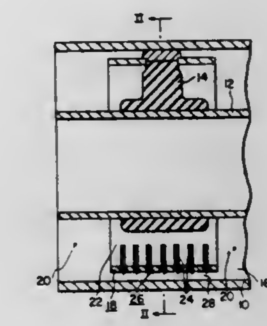

deflector means associated with said apertures for deflecting any particles passing through said apertures to an area intermediate said electrode surface and said outer sheath.

4,064,354
GAS INSULATED TRANSMISSION LINE
Alan H. Cookson, Southboro, Mass., assignor to Westinghouse Electric Corporation, Pittsburgh, Pa.
Filed Nov. 10, 1976, Ser. No. 740,443
Int. Cl.² H01B *9/04*
U.S. Cl. 174—28 **14 Claims**

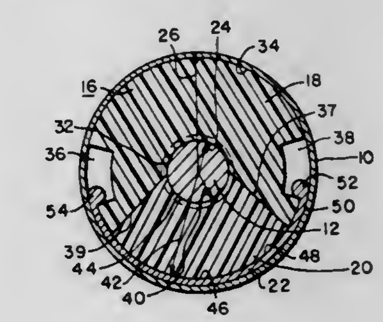

1. A gas insulated transmission line comprising:
an elongated, cylindrical inner conductor disposed within said outer sheath, said inner conductor having a radial outer radius;
an insulating gas disposed within said outer sheath, said insulating gas electrically insulating said inner conductor from said outer sheath; and
at least one spacer assembly disposed within said outer sheath, said spacer assembly insulatably supporting said inner conductor within said outer sheath, said spacer assembly comprising:
a first member having a radial shape defined along its radial extremities by an inner radius substantially the same as said inner conductor outer radius and by an outer radius being substantially the same as said outer sheath inner radius, said first member along its inner radial extremity extending for an arc distance of 180°, said first member being disposed intermediate said inner conductor and said outer sheath, said first member inner radial extremity being positioned adjacent said inner conductor, said first member having a pair of cavities therein extending inwardly from said outer radial extremity;
a second member having a radial shape defined along its radial extremities by an inner radius substantially the same as said inner conductor outer radius and by an outer radius less than said outer sheath inner radius, said second member being disposed intermediate said inner conductor and said outer sheath, said second member inner radial extremity extending for an arc distance of 180° and being positioned adjacent said inner conductor, said first and second member outer radial extremities together extending for an arc distance of 360°; and

a curved plate having inner and outer radial extremities defined by an inner radius substantially the same as said second member outer radius and by an outer radius substantially the same as said outer sheath inner radius, said plate being positioned intermediate said second member and said outer sheath, said plate having an inwardly projecting nub at each circumferential end thereof, said plate circumferentially extending beyond said second member outer radial extremity to said first member cavities such that said nubs are disposed within said first member cavities, said plate securing said first member to said second member.

4,064,355
POLYMERIC FLEXIBLE HOSE CONSTRUCTION AND METHOD OF MAKING SAME
Peter J. Neroni, Dayton, and Donald L. Kleykamp, Springboro, both of Ohio, assignors to Dayco Corporation, Dayton, Ohio
Filed Nov. 8, 1976, Ser. No. 739,874
Int. Cl.^{2} F16L *11/12*
U.S. Cl. 174—47 **8 Claims**

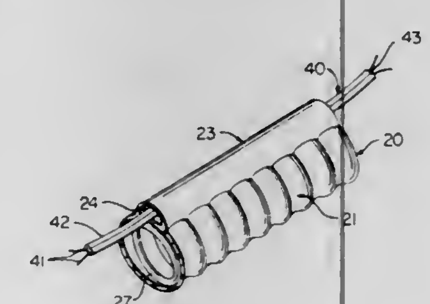

1. A polymeric flexible hose construction comprising, a tubular wall defining a main longitudinally extending passage for conveying a fluid therethrough, said tubular wall having a central longitudinal axis and having a plurality of convolutions therein defined by a continuous longitudinally extending helical convolution, a helical reinforcing member disposed within said helical convolution, and wall means adjoining the exterior of said tubular wall and defining a second longitudinally extending tubular passage for electrical conductor means, said second tubular passage being disposed substantially parallel to said central longitudinal axis, said wall means having a wall portion common with said tubular wall.

6. A hose construction as set forth in claim 1 and further comprising an electrical conductor disposed within said second passage.

4,064,356
SOLDERED JOINT
Norman O. Marler, Jr., Londonderry, and Benjamin M. Mikulis, Jr., Nashua, both of N.H., assignors to Sander Associates, Inc., South Nashua, N.H.
Filed Mar. 11, 1976, Ser. No. 666,096
Int. Cl.^{2} H05K *1/00*
U.S. Cl. 174—68.5 **8 Claims**

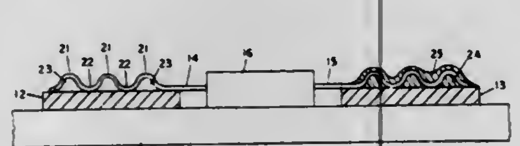

1. The method of soldering a thin, flat conductive lead to a pad having a flat surface comprising the steps of forming said lead with a plurality of undulatory portions, positioning the lead so formed on said surface so that the lead engages the surface at a plurality of spaced apart locations, successive locations being joined by successive undulatory portions extending above the surface thereby defining a plurality of spaces between said surface and said portions, applying molten solder to said lead and said surface so that it substantially fills said spaces, and cooling said lead, said surface and said solder, whereby said surface is joined to said lead throughout the length of said portions.

4,064,357
INTERCONNECTED PRINTED CIRCUITS AND METHOD OF CONNECTING THEM
Herbert Dixon, West Andover, Mass.; Walter Heinrich, Derry, and Gilbert Morris, Amherst, both of N.H., assignors to Teledyne Electro-Mechanisms, Nashua, N.H.
Filed Dec. 2, 1975, Ser. No. 636,986
Int. Cl.^{2} H05K *1/00*
U.S. Cl. 174—68.5 **13 Claims**

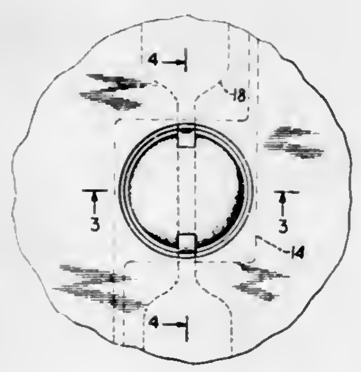

1. A multilayer printed circuit board having at least two conductor layers separated by an insulator layer, said conductor layers being in the form of printed circuit patterns and the circuit patterns on different conductor layers being in electrical communications with each other by means of interconnection points, characterized in that:

the insulator at the interconnection point defines a hole passing between the interconnected conductor layers at the interconnection point, the hole in the insulator being filled with solder that contacts both conductor layers; and

the printed circuit pattern for one conductor layer at the interconnection points is significantly smaller than the interconnection hole so that solder can flow past it into the hole during manufacture.

4,064,358
TERMINATION FOR CONNECTING A SUBMARINE COAXIAL CABLE TO A SUBMERGIBLE HOUSING
Colin F. G. Smith; Ronald C. Oldham, both of Chandlers Ford; Michael J. Hedges, Hythe, Southampton; Alan J. New, Southampton, and William Pearson, Chandlers Ford, all of England, assignors to International Standard Electric Corporation, New York, N.Y.
Filed May 13, 1976, Ser. No. 686,041
Claims priority, application United Kingdom, July 22, 1975, 30593/75
Int. Cl.^{2} H02G *15/14*
U.S. Cl. 174—70 S **2 Claims**

1. A termination for connecting a submarine coaxial cable to a submergible repeater housing comprising:

an anchor assembly for rigidly clamping a central strength member of the cable to the housing;

boot assembly means for surrounding and supporting the cable where it extends away from said anchor assembly;

said boot assembly means being rigidly connectible to the housing and being constructed to allow the cable to flex to a greater extent within its free end than near its end connectible to the housing;

said free end of said boot assembly means including a flexible tube through which the cable passes;

the degree of flexure of said tube and cable being restricted by a bellmouth member surrounding a portion of said flexible tube and having its mouth opening toward said free end of said boot assembly means;

a protective molding arranged on the end of said flexible tube at said free end of said boot assembly means; and

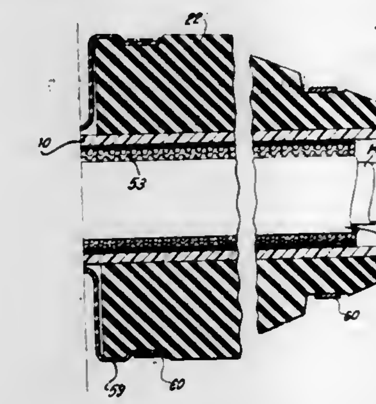

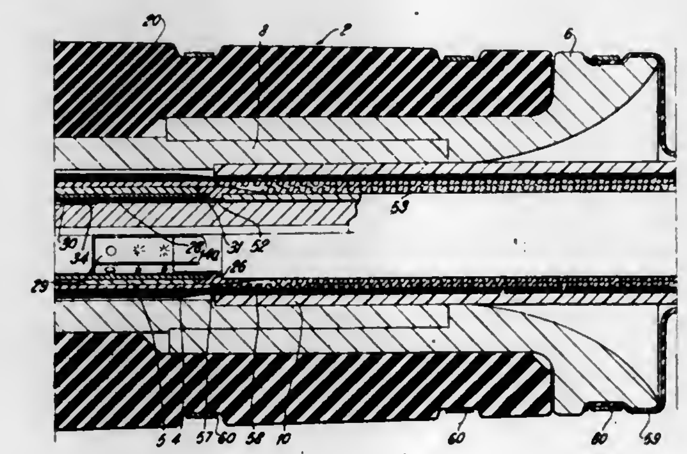

a flexible protective gaiter connecting said molding and said bellmouth member.

4,064,359
FIRE RETARDANT PRODUCT FOR USE WITH ELECTRICAL CABLES AND THE LIKE
Roger L. Peterson, Los Angeles, and George M. Joyce, Santa Monica, both of Calif., assignors to Flamemaster Corporation, Sun Valley, Calif.
Continuation-in-part of Ser. No. 400,054, Sept. 24, 1973, abandoned. This application May 19, 1976, Ser. No. 687,345
Int. Cl.^{2} H01B *7/28;* **B32B** *17/02*
U.S. Cl. 174—107 **16 Claims**

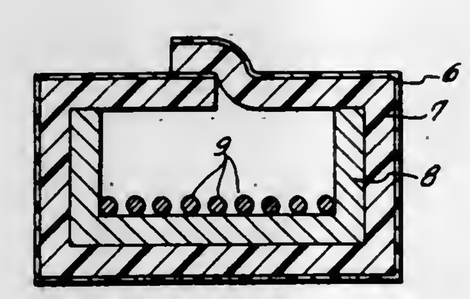

1. A fire protective insulating product adapted to be placed about conduits, electrical cables, and cable trays comprising a first layer containing an insulative inorganic non-combustible glass fiber blanket and a coating bonded to said first layer along the interface with said first layer, said coating being a composition comprising about 1.5 to about 20 weight percent of organically bound halogen, about 3 to above 75 weight percent of high temperature resistant noncombustible fibers, and about 5 to about 75 weight percent of a resinous binder selection from the group consisting of natural rubber and synthetic organic resinous binders, said inorganic non-combustible glass fiber blanket having a temperature resistance substantially less than the high temperature resistant non-combustible fibers of said coating, and said fire protective insulating product having a minimum thickness of said glass fiber blanket of approximately ½ inch.

4,064,360
HIGH SPEED DIGITAL SWITCH
Harry J. Koenig, San Diego, Calif., assignor to The United States of America as represented by the Secretary of the Navy, Washington, D.C.
Filed July 6, 1976, Ser. No. 703,038
Int. Cl.^{2} H04J *3/00;* **H04Q** *11/04*
U.S. Cl. 178—3 **8 Claims**

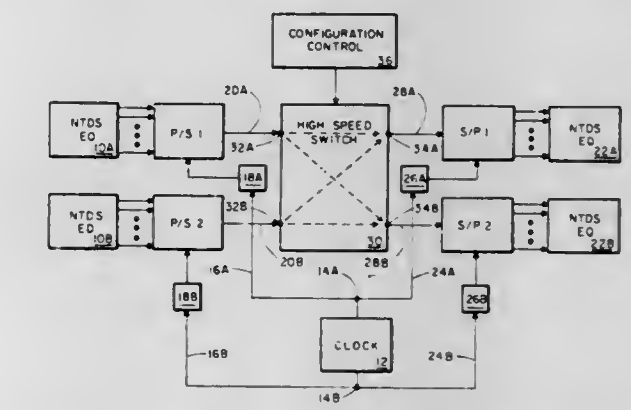

1. An apparatus having input means and output means for rapidly coupling digital information in parallel form applied to a selected one of said appartus input means to a selected one of said apparatus output means, said apparatus comprising:

a. switching means having switch input means and switch output means for rapidly configuring a transmission channel for digital information from a selected one of said switch input means to a selected one of said switch output means in response to a configuration instruction;

b. configuration control means coupled to said switching means for coupling configuration instructions to said switching means;

c. parallel-to-serial (P/S) converter means, each of said P/S converter means having its input coupled to one of said apparatus input means and having its output coupled to one of said switch input means, for receiving digital information in parallel form from its coupled apparatus input means and for coupling digital information in serial form to its coupled switch input means;

d. serial-to-parallel (S/P) converter means, each of said S/P converter means having its output coupled to one of said apparatus output means and having its input coupled through a switch output lead to one of said switch output means for receiving digital information in serial form from its coupled switch output means and for coupling digital information in parallel form to its coupled apparatus output means;

e. clock means for generating a periodic clock signal, which is coupled to each of said P/S converter means through an adjustable delay control means, and to each of said S/P means through a clock lead, wherein the electrical lengths of the switch output lead coupling digital information and the clock lead coupling a clock signal to the same S/P converter are equal.

4,064,361
CORRELATIVE TIMING RECOVERY IN DIGITAL DATA TRANSMISSION SYSTEMS
George John Kustka, Matawan, and Kurt Hugo Mueller, Holmdel, both of N.J., assignors to Bell Telephone Laboratories, Incorporated, Murray Hill, N.J.
Filed Dec. 31, 1975, Ser. No. 645,555
Int. Cl.^{2} H04L *7/00*
U.S. Cl. 178—69.1 **11 Claims**

1. A timing recovery arrangement for received synchronous digital data signals comprising:

means for delaying receiving digital data signals to produce delayed replicas thereof,

means for correlating undelayed received digital signals with delayed replicas thereof from said delaying means to produce a correlation signal, and

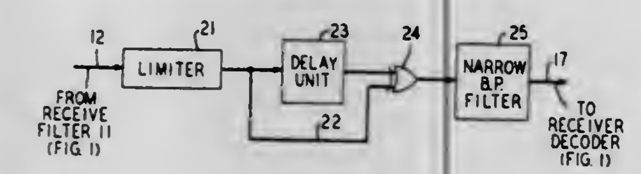

means for bandpass filtering from said correlation signal a periodic component representative of baud sample timing in receiving signal.

4,064,362

HEARING PROTECTOR

David Richard Williams, Rte. 2, Box 409-A, Brookings, Oreg. 97415

Filed Sept. 13, 1976, Ser. No. 722,683

Int. Cl.^{2} H04M *1/19*

U.S. Cl. 179—1 P **4 Claims**

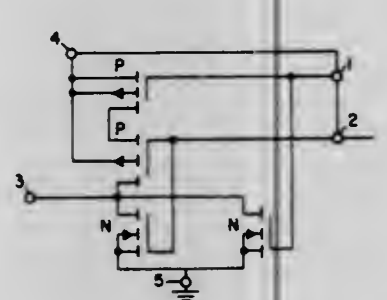

1. A hearing protector comprising an earmuff which comprises:

a microphone for receiving sound waves and producing a microphone output signal in response thereto, wherein the microphone includes a signal terminal for providing said microphone output signal and a ground terminal for defining circuit ground;

amplifier means for amplifying said microphone output signal;

filter means for filtering said microphone output signal to reduce the amplitude of frequency components outside of a predetermined audio frequency range;

speaker means for producing sound waves in response to said amplified and filtered signal; and

control means responsive to said amplified and filtered signal for automatically limiting the volume of said sound waves produced by the speaker when the level of said amplified and filtered signal increases;

wherein the improvement comprises

the control means including a voltage sensitive variable resistance element coupled to the output of the amplifier means for sensing the level of said amplified and filtered signal and having an output coupled to the microphone output for reducing the level of said microphone output signal when the level of said amplified and filtered signal increases.

4,064,363

VOCODER SYSTEMS PROVIDING WAVE FORM ANALYSIS AND SYNTHESIS USING FOURIER TRANSFORM REPRESENTATIVE SIGNALS

Robert Edward Malm, Los Angeles, Calif., assignor to Northrop Corporation, Los Angeles, Calif.

Continuation-in-part of Ser. No. 491,928, July 25, 1974, abandoned. This application May 24, 1976, Ser. No. 689,332

Int. Cl.^{2} G10L *1/00*

U.S. Cl. 179—1 SA **21 Claims**

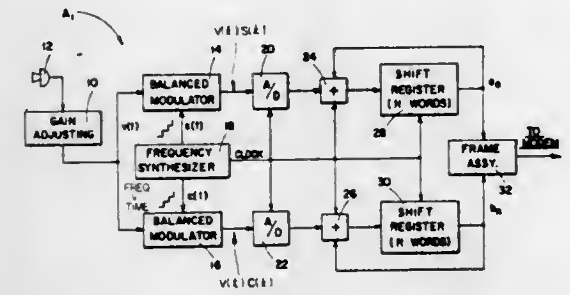

9. A vocoder analyzer for providing a wave form analysis using Fourier transform representative signals, said analyzer comprising:

a. input means for introducing an input analog signal having a broad frequency spectrum,

b. sampling means operatively connected to said input means for sampling the analog signal at pre-established time intervals and forming samples representing a baseband portion and an upper band portion therefrom,

c. digitizing means operatively connected to said sampling means for generating digital equivalents representing certain of the frequencies in said samples,

d. shift register means operatively connected to said digitizing means to hold the samples of digital equivalents,

e. summing means operatively connected to the digitizing means and shift register means for selectively summing groups of a preselected number of samples represented by said digital equivalents and storing such summed samples in said shift register means, and

f. recirculation means operatively connected across an output of said shift register means and an input of said summing means for adding a sum of the digital equivalents from said shift register means to the new digital equivalents to be introduced to the input of said summing means, to thereby generate digital Fourier transform components representative of a Fourier transform of the input signal.

4,064,364

AUDIO FIDELITY AMPLIFIER AND PREAMPLIFIER SYSTEMS

John R. Veale, Los Angeles, Calif., assignor to Sultan Products, Incorporated, Inglewood, Calif.

Filed Dec. 31, 1975, Ser. No. 645,839

Int. Cl.^{2} H04R *3/12*

U.S. Cl. 179—1 B **21 Claims**

10. A method of amplifying and selecting between or combining any of a plurality of first audio fidelity input signals and a plurality of second audio fidelity input signals, said method comprising selecting between any of said plurality of first input signals, actuating any of a plurality of first input signal switches to permit passage of the selected first input signal, selecting between any of said plurality of second input signals, actuating any of a plurality of second input signal switches to permit passage of the selected second input signal, optionally mixing any of said first and second input signal, actuating a dub equalization switch to permit equalization of the bands of frequencies in the selected input signal, shifting a plurality of potentiometer elements to obtain such equalization upon actuation of said dub equalization switch to equalize the bands of frequencies in any of said input signals, actuating a line equalization switch for optionally equalizing the output derived from any one or more of said input signals, and alternatively permitting passage of said input signals as an output signal without equalization by failure to activate said dub equalization switch or line equalization switch.

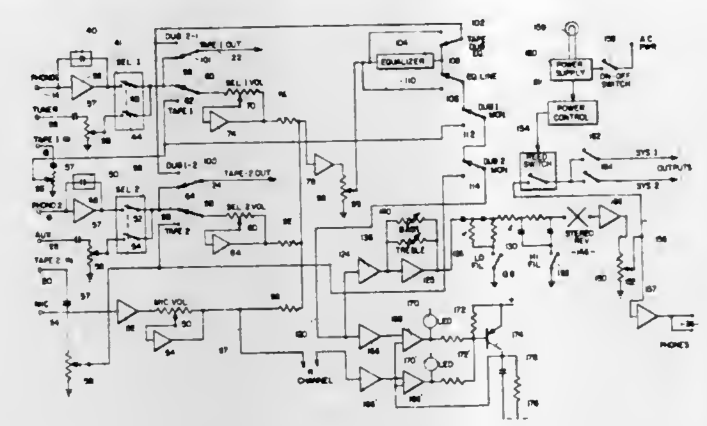

4,064,365

LOUDSPEAKER ASSEMBLY WITH RESTRUCTURED DIAPHRAGM INCLUDING A TWEETER DRIVEN BY A BASS AMPLIFIER

David M. Zeller, Seattle, Wash., assignor to The Raymond Lee Organization, Inc., New York, N.Y.

Filed Jan. 5, 1977, Ser. No. 757,002

Int. Cl.^{2} H04R *1/24, 7/12*

U.S. Cl. 179—1 E **3 Claims**

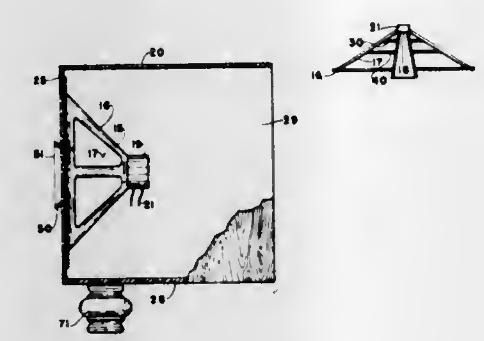

1. A loudspeaker assembly fitted with bass amplifier means, comprising,

a conical loudspeaker unit mounted on a frame, said loudspeaker unit fitted with a first truncated cone that mounts about a diaphragm of a loudspeaker magnet coil assembly,

a plurality of parallel spaced baffles fitted to the inside of said first cone, each said baffle in the form of a circular disc fitted with a concentric hole, said holes of a size to snugly fit about the exterior of a second hollow truncated cone mounted to the periphery of the said diaphragm, said second cone increasing in cross-sectional diameter in the direction away from said diaphragm.

4,064,366

INTRINSICALLY SAFE TELEPHONE SYSTEMS

William Wheatley, Barton-on-Sea; Robert Roy Goff, Brockenhurst, and William Charles Wheatley, Beeston, all of England, assignors to Winster Engineering Group Limited, England

Filed Jan. 15, 1976, Ser. No. 649,364

Int. Cl.^{2} H04M *1/18*

U.S. Cl. 179—2 R **14 Claims**

1. A telephone system for use in effecting communication between a hazardous area and a remote station in a safe area, said telephone system comprising:

a. an operational unit for installation in a hazardous area, said unit including:

i. audio electrical transducer means for producing audio output from an incoming electrical signal and an outgoing electrical signal from an audio input,

ii. amplifier means associated with the transducer means for amplifying the electrical signals passing thereto or therefrom,

iii. a re-chargeable battery for supplying power to the amplifying means,

b. transmission line means for conveying electrical speech signals and call signals between said operational unit and a further unit for installation at a remote station in a safe area,

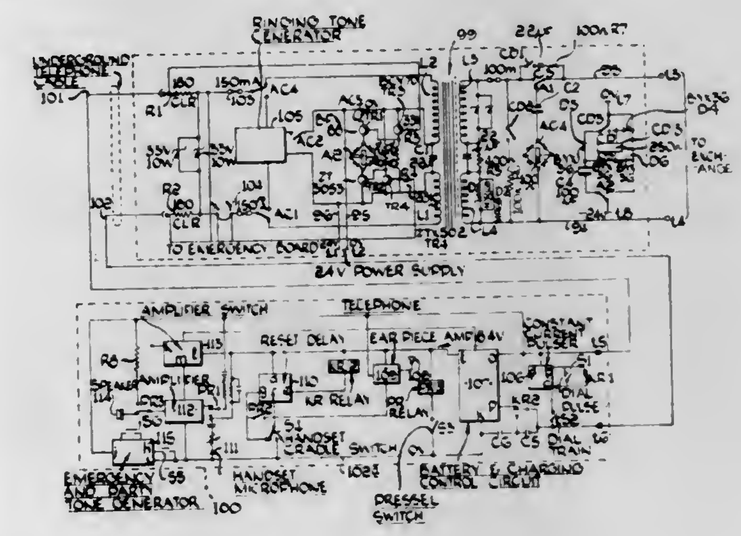

c. an electrical charging circuit arranged to supply charging current of a predetermined low value from a charging current source to the battery of said operational unit along said transmission line means,

d. means for maintaining the charging current during times when said operational unit is out of use for speech transmission, and

e. means for downwardly modulating the charging current to establish both incoming and outgoing call signals on the transmission line means between the operational unit and the remote station such that said call signals do not exceed said predetermined low value.

4,064,367

DUAL TONE SELECTOR WITH ANSWERBACK SIGNALLING

Larry V. O'Malley, Batesburg, S.C., assignor to Westinghouse Air Brake Company, Swissvale, Pa.

Filed July 26, 1976, Ser. No. 708,642

Int. Cl.^{2} H04M *11/00*

U.S. Cl. 179—2 A **9 Claims**

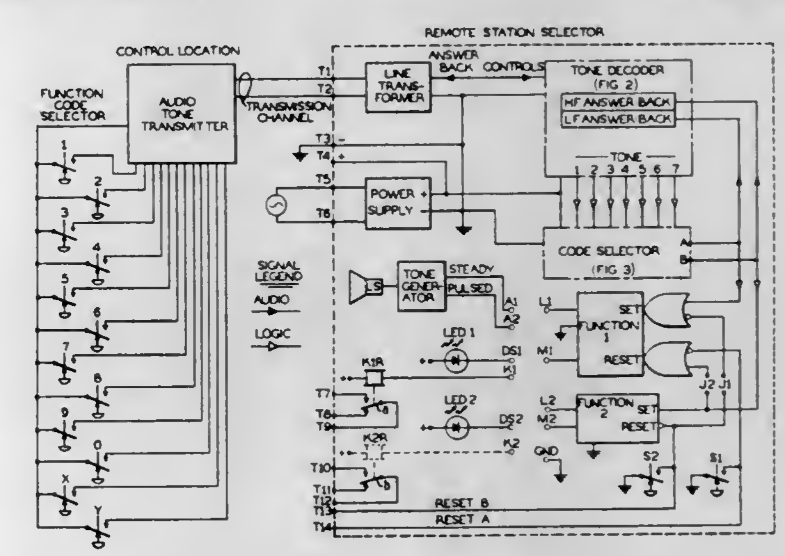

1. An answerback signaling arrangement for an audio tone selector system, in which function control codes of selected tones are transmitted from a control location to operate selected functions at remote stations, comprising in combination at each station,

a. a filter, amplifier network tuned for receiving function

control tones only within the range transmitted from said control location,

b. a registry means connected to said filter, amplifier network and responsive to received tone codes for producing output pulses to control the selected function only when the received code is one assigned to the station functions,

c. feedback circit means coupled to said filter, amplifier network and also connected for receiving said registry means output pulses and enabled thereby for completing at least one feedback circuit for said filter, amplifier network for generating an answerback signal within the range of the audio function control tones, and

d. said filter, amplifier network coupled for transmitting each answerback tone to said control location to indicate registry of the corresponding function control code.

4,064,368

CLOSED-LOOP EMERGENCY ALARM AND RESPONSE SYSTEM

Andrew S. Dibner, Newton, Mass., assignor to Lifeline Systems, Inc., Boston, Mass.

Filed June 7, 1976, Ser. No. 693,296

Int. Cl.[2] H04M *11/04*

U.S. Cl. 179—5 R **3 Claims**

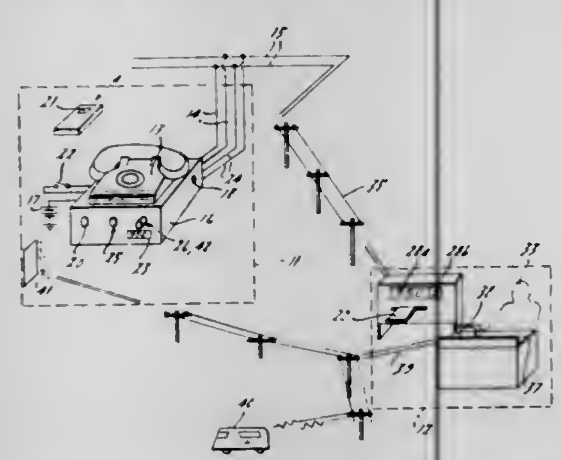

1. A closed-loop emergency alarm and response system comprising a first transceiver located at a residence, a compatible second transceiver at a central station, means at the residence for activating said first transceiver to send an alarm signal to said second transceiver, means at said second transceiver for sending a first "acknowledge" signal to the first transceiver after receipt of said alarm signal, indicating means at the residence having a "call received" made for indicating receipt of said "acknowledge" signal, signal means at the central station for facilitating the dispatch of emergency help to the residence after the sending of said first "acknowledge" signal, means at the residence operable by a person who has arrived at the residence in response to said dispatch from the central station to cause said residence transceiver to send an "all clear" signal to the central station transceiver, means at the central station for causing a second acknowledgement signal to be sent to the residence transceiver after receipt of said "all clear" signal, and means at the residence transceiver responsive to the receipt of said second "acknowledgement" signal for terminating said sending of the "all clear" signal.

4,064,369

METHOD AND APPARATUS FOR PATH TESTING IN A TIME DIVISION MULTIPLEX SWITCHING NETWORK

Frank E. Battocletti, Columbus, Ohio, assignor to North Electric Company, Galion, Ohio

Filed Jan. 31, 1975, Ser. No. 545,982

Int. Cl.[2] H04M *3/22*

U.S. Cl. 179—15 BF **23 Claims**

1. Apparatus for testing path continuity through a time-space-time switching network of a communication switching system, in which paths through said switching network use time slots of time division multiplex recurring frames;

said apparatus comprising means to insert a continuity word into a path being tested, said path being the actual call path to be placed into service, means to couple output and input points of said path being tested to form a continu-

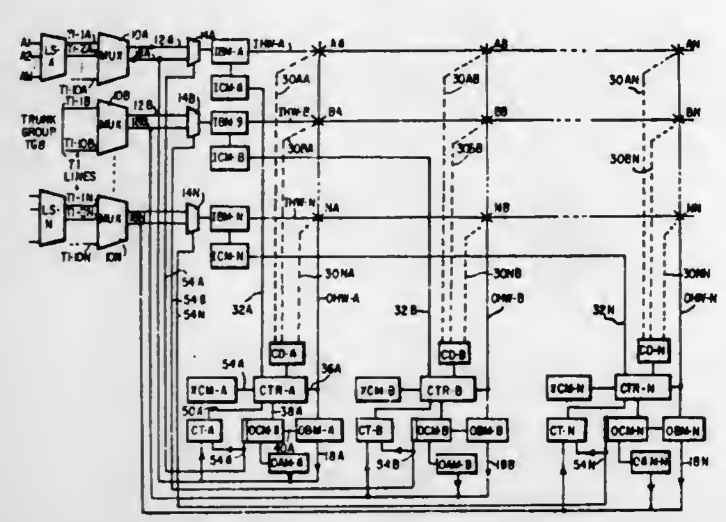

ously circulating loop for said continuity word, comparison means having a first input coupled to input means to receive said continuity word independently of said path being tested, and a second input coupled to said path being tested, said comparison means being operative to supply a verify signal at an output responsive to the words received at said first and said second inputs being the same.

4,064,370

TIME-DIVISION SWITCHING SYSTEM

Homer Eugene Coonce; Judson Bruce Synnott, III, both of Naperville, Ill., and Austin Thomas Harty, deceased, late of Winfield, Ill. (by Veronica M. Harty, administrator), assignors to Bell Telephone Laboratories, Incorporated, Murray Hill, N.J.

Filed July 1, 1976, Ser. No. 701,604

Int. Cl.[2] H04J *3/00*

U.S. Cl. 179—15 BA **9 Claims**

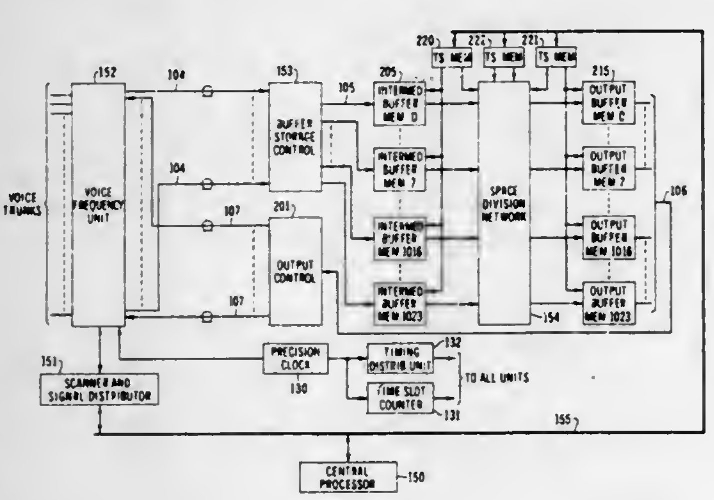

1. In combination:

timing means for generating a plurality of equally spaced timing signals defining time slots of fixed duration;

a time division multiplex line carrying a plurality of channels of digital data words wherein the time duration of each channel is substantially equal to one of said time slots of fixed duration and wherein each digital data word is in a first format and occupies substantially an entire time multiplexed channel;

a switching network having input and output terminals and comprising a plurality of switching elements;

means for establishing communication paths through said switching network at a rate such that any given switching element may be used in any given communication path for a period of time less than or equal to one of said time slots of fixed duration;

reformatting means for converting said digital data words from said first format to a second format; and

means, responsive to said timing signals, for serially transmitting the data words in said second format to an input terminal of said switching network in a period of time less than one of said time slots of fixed duration.

4,064,371

APPARATUS FOR A KEY TELEPHONE SYSTEM FOR ENABLING INTERCOM SUBSTATIONS TO ACCESS TRUNK LINES

Steven Jon Hoehn, Redwood City, Calif., assignor to Litton Business Telephone Systems, Inc., Sunnyvale, Calif.

Division of Ser. No. 587,361, June 16, 1975, Pat. No. 4,016,372. This application Nov. 29, 1976, Ser. No. 745,876

Int. Cl.[2] H04M *3/22*

U.S. Cl. 179—18 FF **10 Claims**

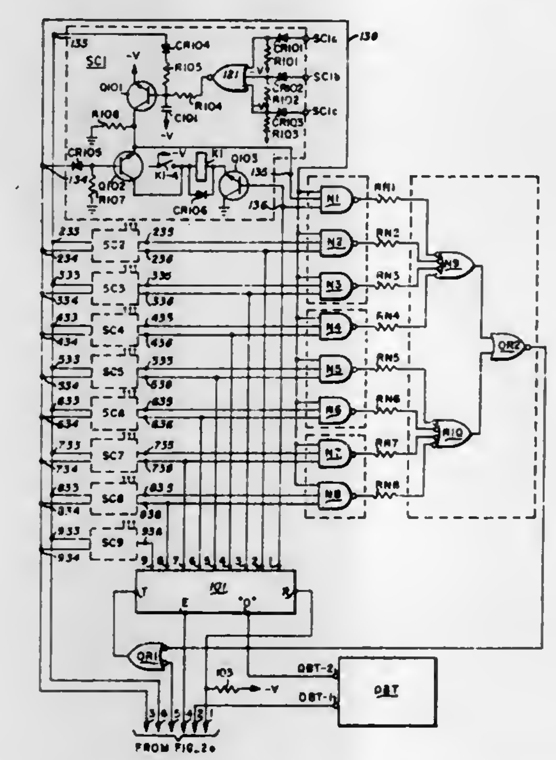

1. A scanning system for selecting one of a plurality of circuit means in a first electrical condition, where each such circuit means may be in either a first or in a second electrical condition, comprising:

electronic counter means, said electronic counter means having a reset input, a trigger input and a plurality of separate output terminals corresponding in number to the circuits to be scanned and with each output associated with a corresponding one of said circuits;

said counter means being operable from a reset condition responsive to a high pulse or pulses at said trigger input for providing a voltage high at the corresponding one of the plurality of output terminals represented by the accumulated total of high pulses applied to its said trigger input;

a plurality of NAND gates, each of said NAND gates including an output and two inputs and operable to provide a voltage low at said output only during the presence of a voltage high at each of said two inputs;

gate means coupled between the outputs of said NAND gates and said trigger input of said counter means responsive to a change in any of said NAND gates from voltage high to low for providing a corresponding voltage high pulse to said trigger input of said counter means;

whereby said counter accumulates an additional high pulse and provides a voltage high at the respective output representative of the accumulated count of trigger pulses;

a plurality of detector means corresponding in number to said plurality of circuit means with one detector means being associated with a corresponding one of said circuit means, each said detector means having an output coupled to a first input of an associated one of said NAND gates and an input coupled to said associated circuit means for producing a voltage high at said output responsive to said circuit being in the second electrical condition;

means connecting each output terminal of said counter means, except the output terminal representative of the maximum count capacity of said counter means, to a second input of a corresponding one of said NAND gates whereby any high at any one output terminal of said counter means is applied to a corresponding NAND gate;

first activating means coupled to said trigger input of said counter means for providing at least one high pulse to said trigger input of said counter;

whereby said counter means once triggered by a first pulse sequentially moves a high from one output terminal to the next output terminal in sequence until a circuit is located that is in the first electrical condition.

4,064,372

SYSTEMS FOR AND METHODS FOR PBX TOLL RESTRICTION

Otto Altenburger, Rochester, N.Y., assignor to Stromberg-Carlson Corporation, Rochester, N.Y.

Filed Jan. 29, 1976, Ser. No. 653,395

Int. Cl.[2] H04M *1/66*

U.S. Cl. 179—18 DA **6 Claims**

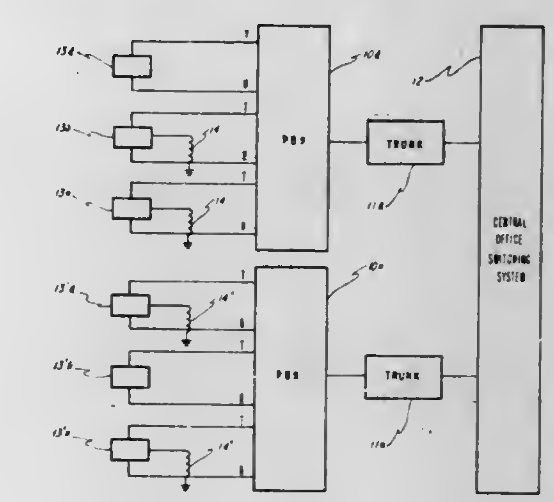

1. A toll restriction system for use with private branch exchanges connected to a central office switching system, said toll restriction system comprising:

a group of telephone lines connected through each of said private branch exchanges;

means for marking selectively individual telephone lines within each group of telephones, wherein said marking distinguishes toll restricted telephone lines from unrestricted telephone lines;

trunk means for connecting each private branch exchange to said central office;

means, arranged to be energized, for marking said trunk means upon connecting a marked line to said trunk means via a said private branch exchange;

means within said central office switching system for distinguishing between marked and unmarked trunk means and, therefore, between restricted and unrestricted telephone lines;

means for intercepting calls made via restricted telephone lines before said restricted telephone lines are connected to a called destination; and

means for transmitting unrestricted calls to called destinations.

4,064,373
LINE CIRCUIT FOR KEY TELEPHONE SYSTEMS
Edouard Pinede, Norwalk, Conn., and John Fraser Litser, Guelph, Canada, assignors to International Standard Electric Corporation, New York, N.Y.
Continuation of Ser. No. 456,055, March 29, 1974, abandoned. This application Nov. 3, 1975, Ser. No. 627,935
Claims priority, application Canada, July 9, 1973, 175971
Int. Cl.[2] H04M *1/00*
U.S. Cl. 179—99 **3 Claims**

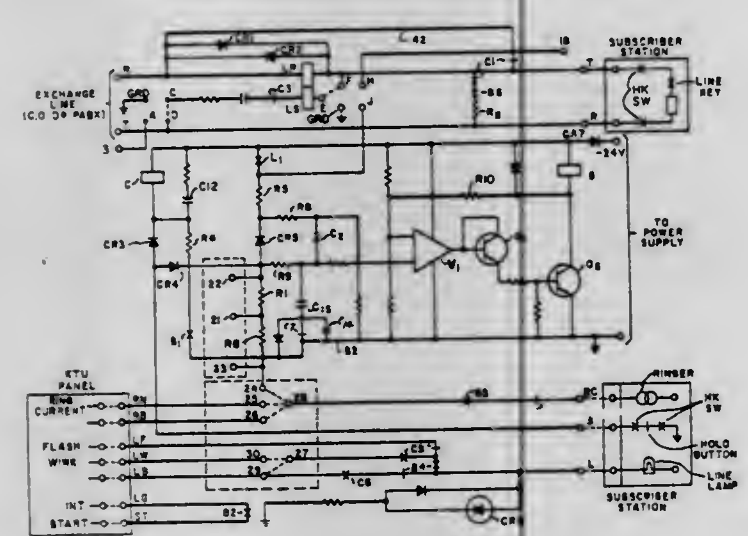

1. A line circuit for coupling a key telephone system line to an exchange over a pair of conductors, comprising a line relay responsive to interrupted AC ring signals received from said exchange over said pair for alternately operating and releasing contacts responsive to said ringing signals, a capacitive tank circuit charged during successive operations of said line relay, bistable latching means, said latching means including an operational amplifier having a first and a second input terminal, means for establishing a threshold voltage to said first input terminal, means coupling said second input terminal to said tank circuit, said amplifier responsive to said tank circuit being charged to a predetermined level relative to said threshold for changing from a first stable state to a second stable state, a ring control relay coupled to the output of said amplifier for operation on said change of state of said latching means to forward ring indications to said line, means for maintaining said amplifier in its second state during interruptions between said ring signals comprising a feedback path from the ring control relay to said first amplifier terminal, said capacitive tank circuit responsive after cessation of said ringing signals from said exchange for discharging after a timing interval longer than said interruptions to a level relative to said threshold to restore said bistable latching means to its first stable state, and means responsive to said bistable means reaching its first state for releasing said ring control relay and terminate the forwarding of signals to the key system line.

4,064,374
COUPLING DEVICE FOR RADIO SET AND SMALL SIZE TAPE RECORDER
Masanobu Sato, Hachioji, Japan, assignor to Olympus Optical Co., Ltd., Tokyo, Japan
Filed Dec. 22, 1975, Ser. No. 643,374
Claims priority, application Japan, Dec. 28, 1974, 50-3827; Dec. 28, 1974, 50-3828; Dec. 28, 1974, 50-3829
Int. Cl.[2] G11B *31/00*
U.S. Cl. 179—100.11 **6 Claims**

1. Apparatus including a radio and a miniature tape recorder, said radio and tape recorder each being capable of independent operation and operation as an integral unit, said apparatus comprising:

A. a radio operable in a radio or tape mode, said radio including:
1. radio receiver means for converting radio signals into electrical signals;
2. a speaker for converting electrical signals into acoustical signals;

B. a miniature tape recorder operable in a record or playback mode, said tape recorder including:
1. magnetic tape head means for converting electrical signals applied thereto into magnetic signals to be applied to a magnetic tape when said tape recorder is in said record mode and for converting magnetic information stored on a magnetic tape into electrical signals when said tape recorder is in said playback mode;
2. a microphone for converting acoustical signals into electrical signals;

C. coupling means for mechanically and electrically coupling said tape recorder to said radio when said tape recorder and radio are to be operated as a single integrated unit, said coupling device including a pocket formed on one lateral side of said radio and adapted to receive said recorder, said pocket being movable between a first position wherein it is closed and a second position wherein it is open;

D. switch means responsive to movement of said pocket from said first to said second position, said switch means:
1. disabling said microphone and applying said electrical signal generated by said receiver to said tape head when

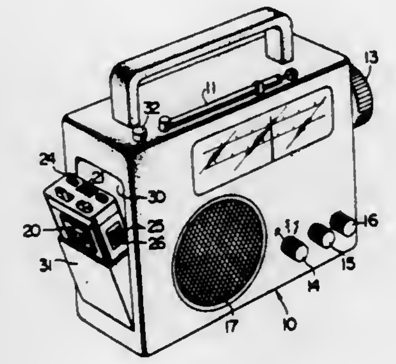

said pocket is in said first position, said radio is in said tape mode and said recorder is in said record mode;
2. disabling said microphone and applying said electrical signal generated by said tape head to said speaker when said pocket is in said first position, said radio is in said tape mode and said tape recorder is in said playback mode; and
3. enabling said microphone and applying said electrical signals generated by said microphone to said tape head when said pocket is in said second position and said tape recorder is in said record mode.

5. A tape recorder and a radio set each capable of independent operation and each having a group of electrical terminals releasably connectable with each other; said radio set having a portable power supply contained therein; said radio set including a receiver and an electrical power circuit path for coupling the power supply to the receiver;

normally open switch means contained in said recorder and being electrically connected to said power circuit path through selected ones of said terminal groups when said recorder and radio set are joined;

means for closing said switch means when said tape recorder is placed in a record or playback mode; and

means for sensing the approach of one end of the tape and for opening said switch means when said one end of the tape has been reached.

4,064,375
VACUUM STRESSED POLYMER FILM PIEZOELECTRIC TRANSDUCER
Kenneth Foden Russell, Baildon, and Alex Victor Garner, Leeds, both of England, assignors to The Rank Organisation Limited, London, England
Filed Aug. 11, 1976, Ser. No. 713,529
Claims priority, application United Kingdom, Aug. 11, 1975, 33339/75
Int. Cl.[2] H04R *17/00*
U.S. Cl. 179—110 A **5 Claims**

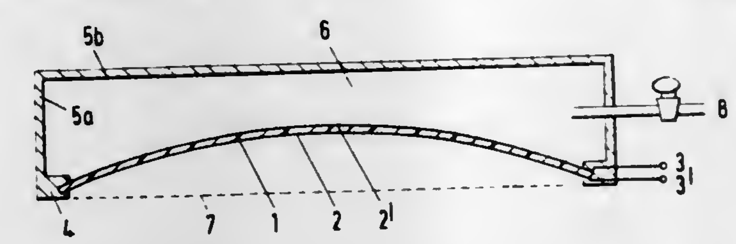

1. An electro-acoustic transducer of the type having a vibratable diaphragm made of a film polymer having piezo-electric properties,

means stressing said diaphragm to a curved shape in cross-section, and

electrodes on each face of said diaphragm,

the improvement wherein,

there are means supporting the periphery of said diaphragm, said means being incorporated in part of an enclosure sealing one face of said diaphragm from the atmosphere, and

stressing of said diaphragm to a curved shape is obtained by evacuation of said enclosure.

4,064,376
SOUND REPRODUCTION SYSTEM AND DEVICE
Kyota Yamada, Hatogaya, Japan, assignor to Bodysonic Kabushiki Kaisha, Tokyo, Japan
Filed Apr. 5, 1976, Ser. No. 673,478
Claims priority, application Japan, Apr. 8, 1975, 50-42585[U]; Jan. 31, 1976, 51-10473[U]; Jan. 31, 1976, 51-10474[U]
Int. Cl.[2] H04R *1/02*
U.S. Cl. 179—146 H **21 Claims**

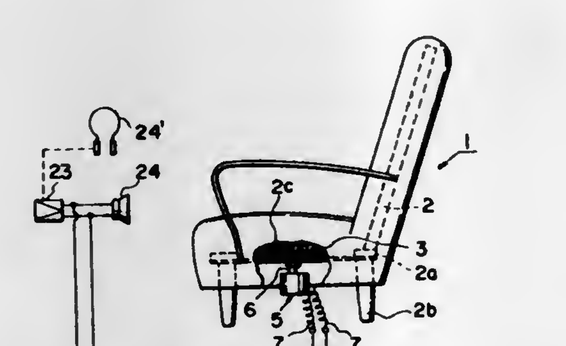

1. Sound frequency reproduction apparatus comprising an article of furniture for holding a human, a frame to constitute said article, a transducer connected to said frame and signal input means connected to said transducer for vibrating the transducer by a signal of appropriate frequency, and an acoustic device connected to said signal input means, to cause vibration of said acoustic device by a signal of appropriate frequency, said acoustic device including a speaker.

4,064,377
ELECTRONIC HYBRID AND HYBRID REPEATER
John F. Regan, Lombard, Ill., assignor to Wescom Switching, Inc., Oakbrook, Ill.
Filed Mar. 11, 1976, Ser. No. 665,813
Int. Cl.[2] H04B *1/58*
U.S. Cl. 179—170 NC **54 Claims**

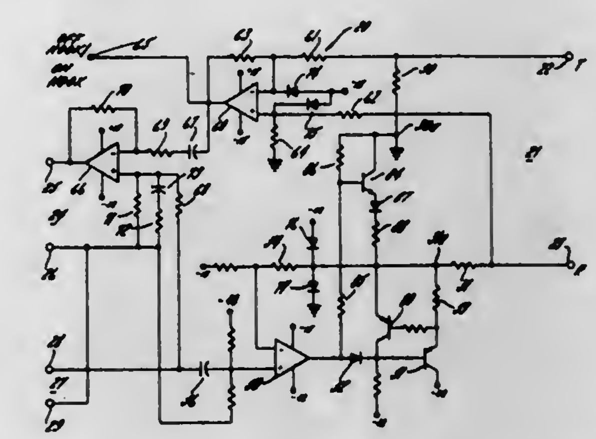

1. In an electronic hybrid having a two wire port for coupling to a two wire line and separate transmit and receive ports for coupling to a four wire line the improvement comprising, driving means responsive to signals imposed on the receive port for driving the two wire line, a pair of matched resistive impedances serially connected between the driving means and the two wire port so that an impedance is in series between the driving means and each line connected to said two wire port, said driving means including means for providing an a.c. ground at the junctions joining said driving means to the respective impedances, said driving means including means for offsetting the quiescent output voltage applied to the respective lines of said two wire line, whereby said driving means provides d.c. current for said two wire line.

4,064,378
ECHO CANCELLING SYSTEM FOR MULTIPLEX TELEPHONE CIRCUITS
Seishi Kitayama; Akira Sato, both of Tokyo, and Junzo Tamura, Ohmiya, all of Japan, assignors to Kokusai Denshin Denwa Kabushiki Kaisha, Japan
Filed May 28, 1976, Ser. No. 691,030
Claims priority, application Japan, June 5, 1975, 50-67060
Int. Cl.[2] H04B *3/20*
U.S. Cl. 179—170.2 **2 Claims**

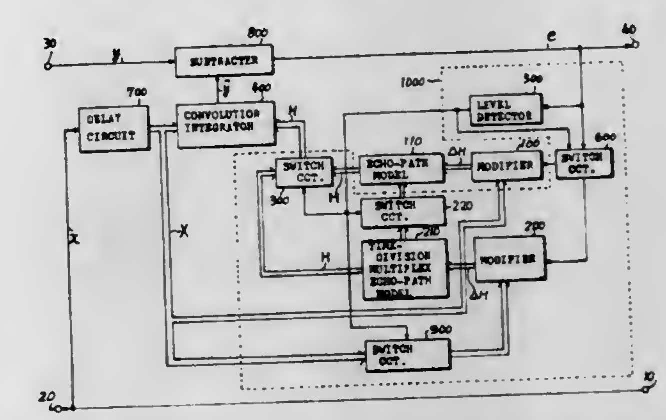

1. An echo cancelling system for multiplex telephone channels comprising:

first adaptive echo-path model means having a short convergence time and a first pseudo impulse response of a sufficiently long time for generating pseudo echo signals;

a plurality of second adaptive echo-path model means equal in number to the number of said multiplex telephone channels and each having a long convergence time and a second pseudo impulse response shorter than said first pseudo impulse response for generating pseudo echo signals;

a plurality of echo cancelling means equal in number to the number of said multiplex telephone channels and each for combining an echo-path signal in a respective one of said telephone channels with the output of a corresponding one of said second adaptive echo-path model means for reducing the respective echo path signal

detection means for detecting when a residual echo of any telephone channel of said echo cancelling means exceeds a predetermined threshold and for thereby generating a control output signal corresponding to said telephone channel having the detected residual echo signal; and

control means activated by said control output signal for switching said first adaptive echo-path model means in substitution for the one of said second adaptive echo-path model means corresponding to the telephone channel having the detected residual echo signal until the residual echo signal is less than the threshold value and thereafter for transferring the contents of said first adaptive echo-path model means to said corresponding second adaptive echo-path model means and switching said corresponding second adaptive echo-path model means in substitution for said first adaptive echo-path model means to maintain the residual echo signal below the threshold value.

4,064,379

LOGARITHMIC ECHO CANCELLER

Otakar Anthony Horna, Bethesda, Md., assignor to Communications Satellite Corporation, Washington, D.C.

Filed June 11, 1976, Ser. No. 694,878

Int. Cl.² H04B *3/20*

U.S. Cl. 179—170.2 **12 Claims**

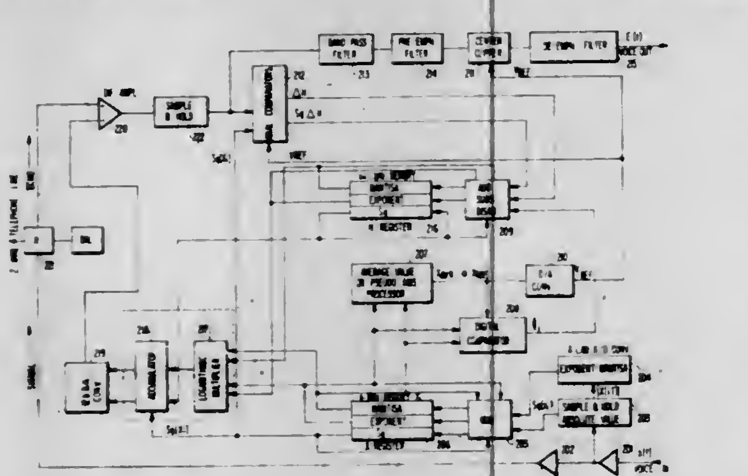

1. A digital echo canceller for use in long distance telephone circuits of the type having means for storing a fixed number of most recent samples $x_1, \ldots, x_i, \ldots, x_n$ of a received signal, means for storing a corresponding fixed number of estimated impulse response coefficients $h_1, \ldots, h_i, \ldots, h_n$, digital convolution means responsive to said stored samples and said stored coefficients for generating an approximate echo signal, means for subtracting said approximate echo signal from a real echo signal thereby producing a difference signal corresponding to residual echo, and cross-correlation means responsive to said residual echo and said stored samples for updating said stored coefficients respectively, the improvement wherein said stored samples and said stored coefficients are encoded in a logarithmic format having sign, exponent and mantissa, said digital convolution means comprises means for multiplying by the addition of the logarithms of said stored samples and said stored coefficients, means for accumulating the products generated by said multiplying means, and means for converting the value of the accumulated products to an analog signal representing said approximate echo signal, said analog signal being analogically subtracted in said means for subtracting.

12. A pseudo rms value circuit comprising:

means for receiving a plurality of digital signals,

a pseudo rms value register,

accumulator means for adding and accumulating each digital signal having a value exceeding a predetermined absolute value, and

counter means connected to count the overflows from said accumulator means, the contents of said counter means being stored in said pseudo rms value register.

4,064,380

MOVABLE CONTACT CARRIER FOR AN ELECTRICAL CONTROL

Benjamin H. Matthews, Peninsula, Ohio, assignor to Lucerne Products, Inc., Hudson, Ohio

Filed Feb. 25, 1976, Ser. No. 661,127

Int. Cl.² H01H *15/00*

U.S. Cl. 200—16 C **1 Claim**

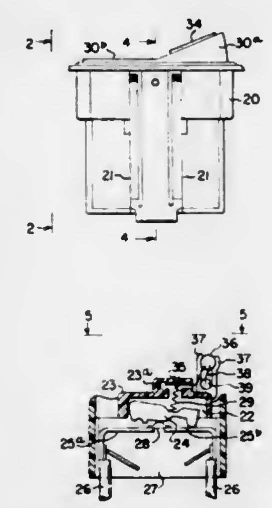

1. An electric switch for portable electric motor-driven tools comprising a switch housing formed of insulating material, a switch device disposed in said housing, comprising two pairs of stationary contacts mounted in said housing, each pair consisting of two contacts disposed in spaced relation longitudinally with respect to the axis of the housing, an insulative contact carrier disposed in said housing for reciprocation therein along the longitudinal axis of said carrier, said contact carrier having a pair of side-by-side elongated parallel channels in the underside thereof, a pair of contactor members each being disposed in one of said channels and arranged that longitudinal reciprocation of said contact carrier moves each side contactor member into engagement with the contacts of one of said pairs of stationary contacts to define the "on" position for said switch, said stationary contacts of each of said pairs adapted to be connected to the electrical power source for said tool, an insulative rocker actuator pivotally attached to said housing and interconnecting with said contact carrier and pivotally actuatable to slide said contact carrier to its said "on" position, translucent plate means in said rocker actuator, and signal means cooperating with said plate means for visually indicating the movement of said carrier to the "on" position of said switch comprising a lamp support on said carrier and movable therewith, a lamp disposed in said support, and conductor means connecting said lamp in circuit with the electrical power source connected to said stationary contacts with the switch in the "on" position.

4,064,381

PUSHBUTTON SWITCH ASSEMBLY HAVING FLOATING TYPE BRIDGING CONTACT AND LOST MOTION ACTUATOR

John H. Mullen, and Stephen S. Dobrosielski, both of Beaver, Pa., assignors to Westinghouse Electric Corporation, Pittsburgh, Pa.

Filed Feb. 18, 1976, Ser. No. 658,952

Int. Cl.² H01H *13/12, 1/20, 3/48*

U.S. Cl. 200—16 A **7 Claims**

1. A pushbutton switch structure comprising at least two contact blocks stacked in end-to-end surface abutment and on a longitudinal axis, each contact block having stationary and movable contacts, each block also having movable contact operating means including a guided reciprocable plunger, the plunger having an extension member in end-to-end abutment with the plunger of an adjacent block, manual means adjacent to one block and operatively connected to the plunger thereof, a bridging movable contact carrier unit extending laterally of the direction of movement of the plunger, a support guide for supporting the bridging movable contact carrier unit, said carrier unit and the support guide having aligned aperture means, the extension member extending through the aligned aperture means, the plunger having an outturned shoulder on the side of the carrier unit opposite the support guide, first

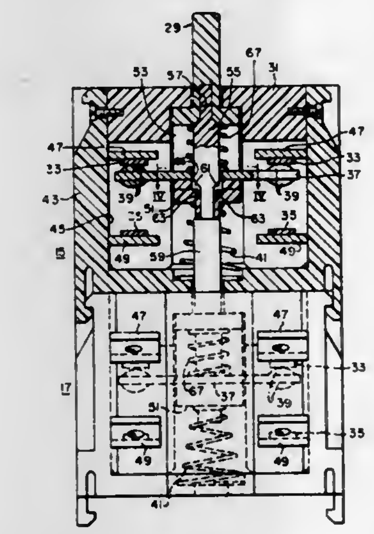

biasing means between the carrier unit and the contact block for retaining the movable contact normally closed with the upper set of contacts, second biasing means between the outturned shoulder and the carrier unit for holding the plunger in a fully retracted position, the first biasing means having a greater force than the second biasing means, the extension having a first outturned surface facing the direction of movement of the plunger when opening the contacts, and the carrier unit having a second complementary outturned surface facing and spaced from the first outturned surface to effect delayed movement of the carrier unit when the plunger is actuated.

4,064,382

IGNITION DISTRIBUTOR BREAKER CONTACT POINT SET HAVING GROUNDING STRAPS DISPOSED BETWEEN CAPACITOR AND CONTACT TERMINAL

John A. MacKay, New Baltimore, and George M. Gilkey, Farmington, both of Mich., assignors to Gulf & Western Manufacturing Company, Southfield, Mich.

Filed July 21, 1976, Ser. No. 706,651

Int. Cl.² H01H *19/00;* **F02P** *3/00*

U.S. Cl. 200—19 R **6 Claims**

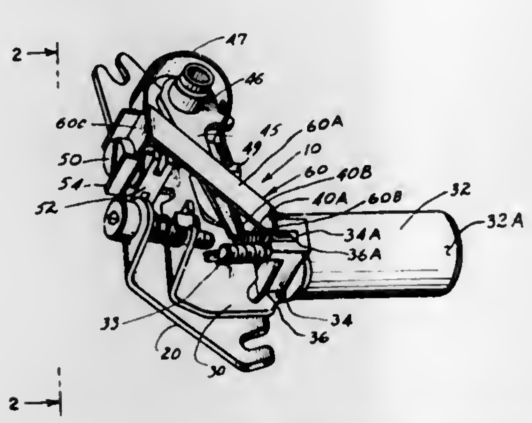

1. An improved ignition distributor breaker contact point set of the type having an electrically conductive plate member which includes a first breaker contact mounted on said plate member; an electrically conductive, pivotably mounted breaker arm electrically insulated from said plate member and including at one end thereof a second breaker contact adapted to physically and electrically engage the first breaker contact, said breaker arm being spring loaded by affixation to one end of an electrically conductive leaf spring, which is releasably secured at its other end to said plate member and is insulated therefrom and a condensor slidably mounted on said plate member, said condensor having a first electrically conductive terminal in physical and electrical contact with said plate member and a second electrically conductive terminal insulated from said plate member, wherein said improvement comprises an electrically conductive elongated support strap having an elongated center portion and two end portions each extending angularly from said center portion, said strap spanning directly between and electrically connecting the second electrically conductive terminal of said condensor and said electrically conductive leaf spring at said other end.

4,064,383

VACUUM CIRCUIT BREAKER WITH IMPROVED MEANS FOR LIMITING OVERTRAVEL OF MOVABLE CONTACT AT END OF OPENING STROKE

Philip Barkan, Media, Pa., assignor to General Electric Company, Philadelphia, Pa.

Filed Apr. 26, 1976, Ser. No. 680,413

Int. Cl.² H01L *33/66*

U.S. Cl. 200—144 B **10 Claims**

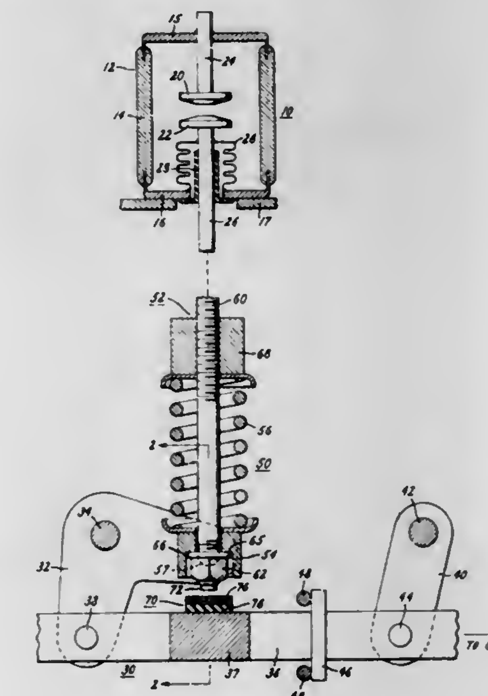

1. A vacuum-type circuit breaker comprising:

a. an evacuated envelope,

b. a pair of separable contacts within said envelope, one of which is movable relative to the other,

c. a contact rod extending into said envelope for carrying said one contact,

d. a flexible metal bellows connected between said contact rod and said envelope for providing a seal about said contact rod,

e. a wipe mechanism comprising:

e1. a driven part coupled to said contact rod,

e2. a driving part through which contact operating force is applied to said driven part, and

e3. preloaded spring means between said driving and driven parts through which driving force is transmitted from said driving to said driven part during contact-closing motion, said spring means yielding to store energy when said driving part is driven through contact-wipe travel after said contacts engage at the end of a closing operation,

f. an operating member movable with respect to said driving part but coupled to said driving part and operable through a closing stroke to transmit closing motion to said one contact through said wipe mechanism; said operating member and said driving part continuing to move through contact-wipe travel after said contacts engage at the end

of a closing stroke, thereby storing energy in said spring means,

g. said operating memer being operable through an opening stroke to drive said driving part against said driven part to impart contact-opening motion to said driven part,

h. first stop means for stopping said operating member at the end of its opening stroke with such abruptness that said driven part overruns said driving part following such stopping against the opposition of said preloaded spring means,

i. second stop means for limiting overrunning of said driven part with respect to said driving part following said stopping of said driving part comprising a stop carried by said operating member for engaging said driven part and thereby blocking said overrunning after a limited amount of such overrunning sufficiently low to prevent damage to said bellows despite thousands of excursions of said driven part through said overrunning travel, said stop being carried on said operating member in such a location that the stop is spaced from said wipe mechanism during contact-wipe travel at the end of a closing stroke.

4,064,384

ARC ELECTRODE, ESPECIALLY FOR A CONTACT ARRANGEMENT IN A VACUUM SWITCH

Joachim Amsler, Seon, Switzerland, assignor to Sprecher & Schuh AG, Aarau, Switzerland

Filed Nov. 24, 1973, Ser. No. 634,465

Claims priority, application Switzerland, Jan. 10, 1975, 258/75

Int. Cl.² H01H *33/66*

U.S. Cl. 200—144 B **9 Claims**

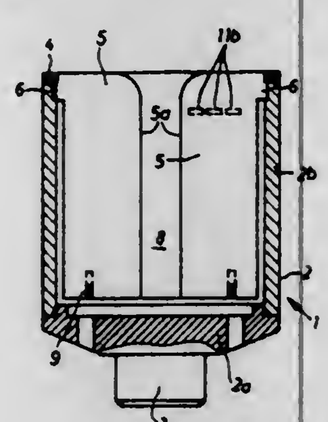

1. An arc electrode particularly for a contact arrangement in a vacuum switch, comprising a contact element having a contact surface; electrode plates having arcing surfaces for taking-up the arc base points; means for securing the electrode plates at said contact element, said electrode plates being arranged in spaced relationship from one another by a separation gap and extending away from said contact surface, each electrode plate having opposite faces, each electrode plate having impressed recesses at least at one face of said electrode plate, said recesses being in an area outside said separation gap free of electrical stress.

4,064,385

MULTIPOINT MESH WELDING MACHINE

Hans Gött; Josef Ritter; Klaus Ritter, and Gerhard Ritter, all of Graz, Austria, assignors to EVG Entwicklungs-u. Verwertungs-Gesellschaft m.b.H., Graz, Austria

Filed Oct. 24, 1975, Ser. No. 625,489

Claims priority, application Austria, Oct. 28, 1974, 8669/74

Int. Cl.² B23K *11/00*

U.S. Cl. 219—56 **6 Claims**

1. A multipoint mesh welding machine for use in manufacturing a mesh, comprising, in combination:

a row of welding electrode holders on one side of said working plane;

at least two busbars associated with each of said electrode holders, said mesh defining a working plane and including a direction of advancement, said busbars extending across said machine transverse of said direction of advancement;

an adjustable switching means associated with each of said electrode holders and operable for electrically connecting its associated electrode holder to a selected one of its associate busbars;

each of said electrode holders and its associated busbars including contact surfaces substantially parallel and facing one another; each of said switching means comprising a conductive body disposed between its associated welding electrode holder and busbars and being operable to be slid transversely to the associated busbars and including

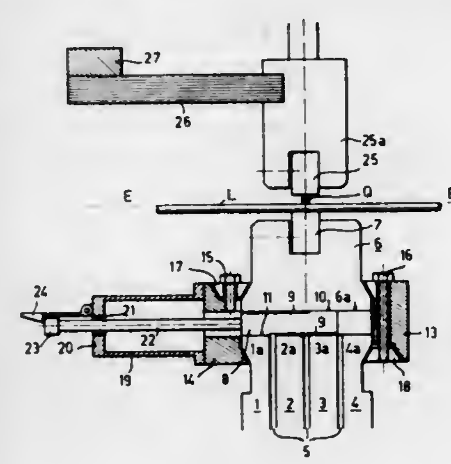

contact surface means for cooperating selectively with the contact surfaces on the associated busbars and electrode holder; said row of electrode holders being associated with four of said busbars and said sliding body having a length equal to the sum of the widths of said contact surfaces of three of said busbars, opposite faces of said sliding body being partially covered with areas of insulation arranged offset with respect to one another in such a way that two conductive areas each equal in width to that of said contact surface of one of said busbars are exposed one at one end of one of said opposite faces and the other at the opposite end of the opposite one of said opposite faces.

4,064,386

METHOD OF DECORATING WOOD AND WOOD-LIKE PRODUCTS

George R. Numrich, Jr., R.D. No. 3, Box 266, Kingston, N.Y. 12401

Filed Apr. 30, 1976, Ser. No. 681,899

Int. Cl.² B23P *1/00;* **H05B** *7/18;* **B27M** *1/08;* **B29C** *19/02*

U.S. Cl. 219—68 **10 Claims**

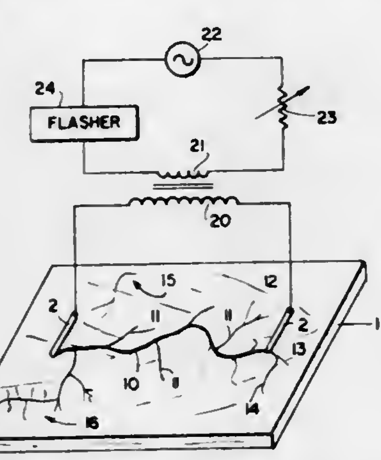

1. A method of decorating wood, which comprises providing a pair of electrodes in proximity to a surface of the wood, applying a high voltage current of from about 6,000 to about 25,000 volts to said surface of the wood across said electrodes to initiate the burning of at least one track in said surface, reducing the voltage across said electrodes after the initiation of the burning of said track to a value no lower than about 1,000 volts and controlling the burning of the wood to obtain a random pattern of tracks.

4,064,387

HEATER CONTROL UNIT

James P. McMullan, 2630 Seaman Ave., El Monte, Calif. 91733

Filed Apr. 13, 1977, Ser. No. 787,296

Int. Cl.² H05B *3/00*

U.S. Cl. 219—217 **10 Claims**

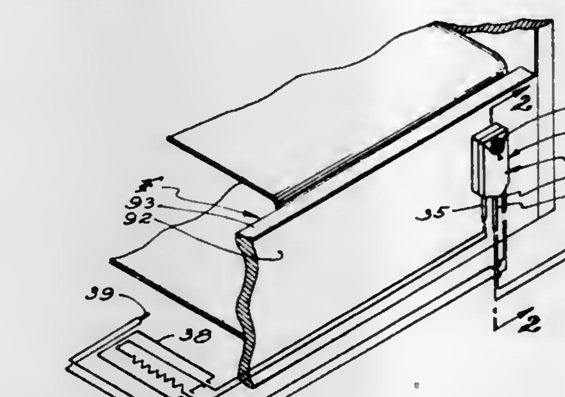

1. A waterbed heater control unit comprising an elongate, vertical, rectalinear box-like housing having front, rear, top, bottom and side walls and a horizontal transverse partition within the housing defining upper and lower compartments and having a central vertical opening, a circuit board mounted within the lower chamber carrying an electric control circuit for a related electric resistance heater, adjustable to select a desired heater heat output and operable to automatically control a supply of current to a related heater whereby selected heat output is attained, said circuit includes an electric current altering device with an elongate rotatable shaft extending vertically upwardly through the opening in the partition, sealing means in said opening and about said shaft, a window opening in the housing accessible at the front thereof communicating with the upper compartment, a control knob on the shaft within said upper compartment and having a portion projecting into the window and manually accessible at the front of the housing, cord receiving openings in a wall of the housing, electric cords and cables connected with the circuit, a remote power source, a remote temperature sensor junction and a remote related heater extending through the cord receiving openings.

4,064,388

DECODER CLUTCHING SYSTEM FOR MINICOMPUTERS

Edwin O. Roggenstein, and Chockalingam Manthiram, both of Plymouth, Mich., assignors to Burroughs Corporation, Detroit, Mich.

Continuation-in-part of Ser. No. 528,437, Nov. 29, 1974, abandoned. This application Dec. 8, 1975, Ser. No. 638,684

Int. Cl.² G06K *1/00*

U.S. Cl. 235—61 A **5 Claims**

1. A decoder clutching system for use in a system employing a decoder, a continuously rotating main motor, and means responsive to the continuous rotation of the main motor for rotatably driving said decoder, comprising:

an electromagnetic master clutching means coupled between said main motor and said decoder driving means, said master clutching means having a clutch coil energized in response to an electrical control signal for engaging said clutching means upon energization of said clutch coil to enable said continuously rotating main motor and driving means to rotatably drive said decoder only during said engagement of said master clutching means;

means for anticipating desired operation of said decoder;

means responsive to said anticipated desired decoder operation for generating an electrical command signal indicative of said anticipated desired decoder operation; and

logical control means responsive to said electrical command signal for generating said electrical control signal to energize said clutch coil, said logical control means comprising:

delay multivibrator means presettable with a predetermined delay period and responsive to the arrival of a reset pulse at its input for restarting said delay period and maintaining a first output state while said reset pulse arrives before said delay period elapses and said delay multivibrator means also responsive to the absence of said reset pulse at its input during said delay period for switching to a second output state and maintaining said second output state during the absence of said reset pulse;

input gating means responsive to said command signal for supplying said reset pulses to said input of said delay multivibrator means; and

control output means responsive to the first output state of said delay multivibrator means for providing said electrical control signal to said clutch coil and said control

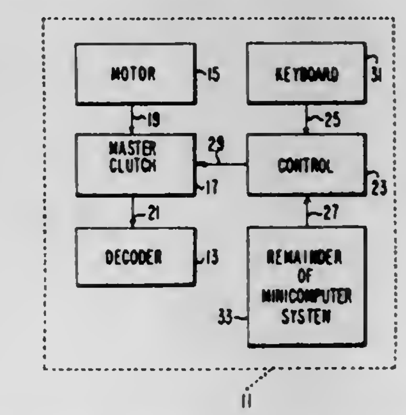

output means also responsive to said second output state of said delay multivibrator means for removing said electrical control signal from said clutch coil, thereby de-energizing said clutch coil, said control output means comprising:

a NAND gate driver having its input coupled to the output of said delay multivibrator means;

biasing means coupled to the output of said NAND gate driver;

output transistor means having its base coupled to said output of said NAND gate driver means, its emitter coupled to ground and its collector coupled to said clutch coil, said output transistor means being responsive to said first output state of said delay multivibrator means for switching to a conductive state for providing said electrical control signal to said clutch coil to energize said clutch coil and said output transistor means also being responsive to said second output state of said delay multivibrator means for switching to a non-conductive state for removing said electrical control signal from said clutch coil to de-energize said clutch coil.

4,064,389

SYSTEM AND METHOD FOR AUTHENTICATING AN ELECTRONICALLY TRANSMITTED DOCUMENT

Peter Theodore Patterson, Cinnaminson, N.J., assignor to RCA Corporation, New York, N.Y.

Filed June 23, 1976, Ser. No. 698,930

Int. Cl.² G06K *15/02;* **H04Q** *5/00*

U.S. Cl. 235—431 **8 Claims**

1. A system for transmitting electronically from an input point to a remote output point the contents of a document which includes a machine-readable text and for authenticating that document by means of a card containing an authentication

mark in digitized machine readable form, comprising in combination:

means at said input point for optically scanning said text of said document and for producing corresponding electronic signals;

means for reading from said card digitized signals corresponding to said authentication mark and for producing electronic signals corresponding thereto;

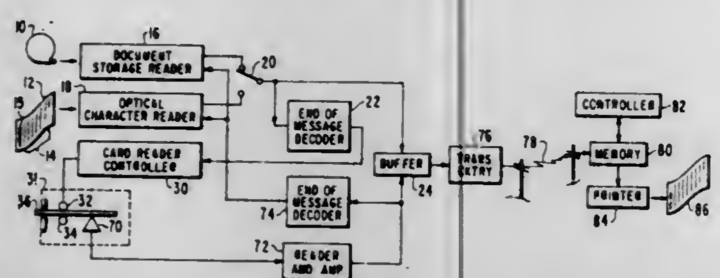

means at said output point adapted to be coupled to said scanning means and said card reading means and when so coupled receptive of said signals corresponding to said text and to signals corresponding to said mark for producing a document containing the same text as that contained in said document at said input point, and containing said mark authenticating said document.

4,064,390

METHOD AND APPARATUS FOR READING CODED LABELS

Alfred P. Hildebrand, Mountain View; Howard E. Morrow, San Jose, and Henry W. Jones, San Leandro, all of Calif., assignors to Spectra-Physics, Inc., Mountain View, Calif.

Continuation of Ser. No. 677,865, April 19, 1976, which is a continuation of Ser. No. 568,666, April 16, 1975, which is a continuation of Ser. No. 466,803, May 3, 1974. This application Dec. 23, 1976, Ser. No. 753,815

Int. Cl.² G06K *7/14;* **G02B** *5/14;* **G06K** *9/12*

U.S. Cl. 235—470 **22 Claims**

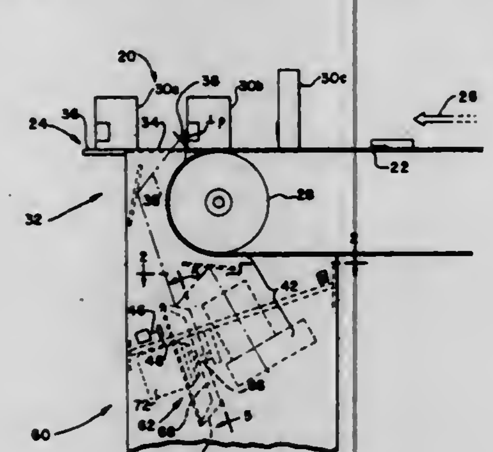

1. A method of reading coded labels on merchandise passing a window defining a short vertical dimension in the direction of movement of said merchandise and a longer horizontal dimension across the direction of movement thereof, creating a laser beam moving said beam sequentially in a pattern consisting of a plurality of substantially vertical scans interspersed with substantially horizontal scan, said horizontal scan being stable with respect to said window, said vertical scans being moved across said window by predetermined increments until said window area has been covered by said scans, retrodirectively scanning the horizontal path of travel of said beam to receive reflection variations from said label, developing an electrical signal indicative of said reflection variations.

4,064,391

COUNTING METHOD IN A LEAVES COUNTING MACHINE

Eiichi Kokubo, Urawa, and Tuyoshi Miyagawa, Chigasaki, both of Japan, assignors to Laurel Bank Machine Co., Ltd., Tokyo, Japan

Filed Jan. 28, 1976, Ser. No. 653,374

Claims priority, application Japan, Jan. 30, 1975, 50-12810

Int. Cl.² G06M *9/02*

U.S. Cl. 235—92 SB **2 Claims**

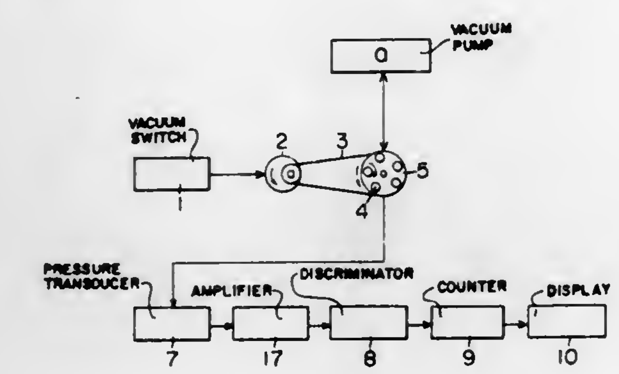

1. A counting method in a leaves counting machine wherein a rotor has a plurality of suction heads arranged on a rotary disc at equal intervals and wherein leaves are counted by drawing and turning the leaves over one by one by the suction heads in the course of rotation of the rotor, said method comprising detecting changes in suction pressure during the suction of the leaves against the suction heads by a pressure transducer, converting the change in suction pressure into an electrical pulse by said transducer, feeding the pulses from the transducer through an amplifier and a level discriminator circuit and counting said pulses.

4,064,392

ENGINEERED SAFEGUARDS SYSTEMS AND METHOD IN NUCLEAR POWER PLANT TRAINING SIMULATOR

Adewunmi A. Desalu, Cambridge, Mass., assignor to Westinghouse Electric Corporation, Pittsburgh, Pa.

Continuation of Ser. No. 335,285, Feb. 23, 1973, abandoned. This application Oct. 31, 1974, Ser. No. 519,723

Int. Cl.² G06F *15/52*

U.S. Cl. 364—492 **24 Claims**

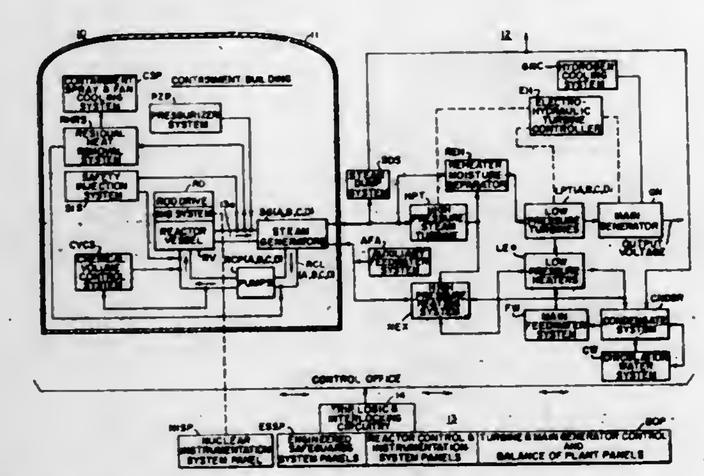

1. An automated training simulator for the real-time dynamic operation of a nuclear power plant having an engineered safeguards system which includes a non-linear fluid flow network, comprising

a control console having command devices operable to generate input data values;

calculating means including sequence controlling means having the following components,

a. means responsive to the input data to generate a data value relating to flow in the fluid flow network in accordance with a linear equation and a stored constant,

b. means to generate a data value relating to a non-linear coefficient in accordance with the generated data value relating to flow; and

indicating means governed by the generated flow data value to indicate a physical value for the fluid flow network.

4,064,393

DEVICE FOR MEASURING RADIATION ABSORPTION IN A SECTION OF A BODY

Klaus Pasedach, Hamburg, and Wolfgang Wagner, Norderstedt, both of Germany, assignors to U.S. Philips Corporation, New York, N.Y.

Filed Feb. 27, 1976, Ser. No. 661,986

Claims priority, application Germany, Mar. 14, 1975, 2511231

Int. Cl.² G01N *23/08*

U.S. Cl. 364—414 **11 Claims**

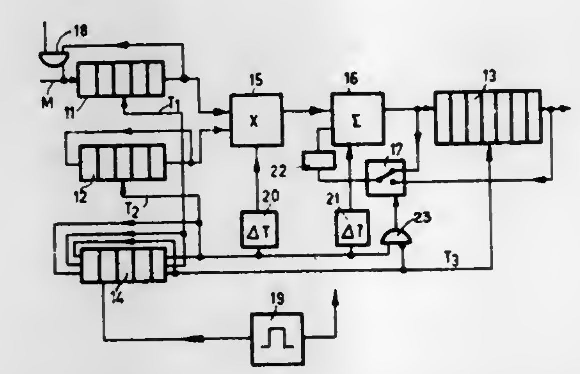

1. A device for measuring radiation absorption in a section of a body, comprising a radiation source emitting a wedge-shaped flat beam which irradiates the body, a series of adjacently arranged radiation detectors for the local measurement of a transmitted part of the radiation in different positions of the source and the detectors with respect to the body, means for calculating the absorption in the section to be measured on the basis of the measuring values obtained, and means to calculate integral values of the absorption along mutually crossing sets of mutually parallel extending strips by interpolation of measuring values, the integral values being processed by the means for calculating the absorption in the section of the body.

4,064,394

ELECTRONIC DIGITAL PROCESS CONTROLLER HAVING SIMULATED ANALOG CONTROL FUNCTIONS

Bruce S. Allen, Southbury, Conn., assignor to American Chain & Cable Company, Inc., Bridgeport, Conn.

Filed May 28, 1975, Ser. No. 581,433

Int. Cl.² G06F *15/46*

U.S. Cl. 364—107 **27 Claims**

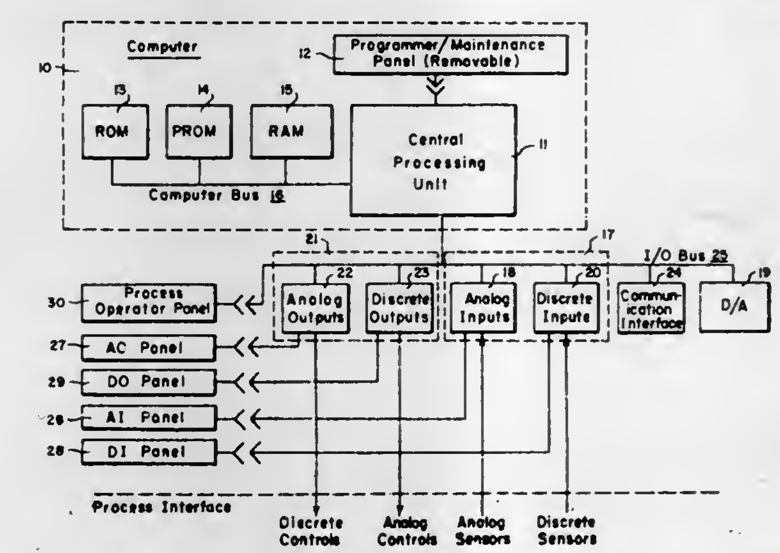

1. An electronic digital process controller for controlling processes of the type utilizing the processing of input signals including one or more analog input signals in order to derive one or more output control signals for controlling one or more process control devices, and controller comprising:

input means for coupling one or more input signals from one or more process sensing devices to a computer, said input means including one or more terminals for receiving analog input signals and one or more paths for coupling said analog input signals to a computer;

coupled to said input means, an electronic digital computer for receiving said input signals from said input means and processing said input signals to derive one or more process control signals for controlling said process, said computer being programmed to simulate the functions of one or more analog process control blocks;

output means for coupling said computer to one or more process control devices, said output means including one or more output paths for coupling said process control signals to said process control devices and one or more terminals for connecting said paths to said process control devices; and

a process operator's panel coupled to said computer, said panel including:

a. means for selecting each of said one or more analog input signals for processing by said computer.

b. means for selecting each of said one or more analog process control blocks for processing a selected analog input signal; and

c. means for selecting each of said one or more process control signals and each of said one or more output paths whereby a selected process control signal is directed to a selected output terminal.

4,064,395

MACHINE CONTROL SYSTEM EMPLOYING A PROGRAMMABLE MACHINE FUNCTION CONTROLLER

Kenneth Erwin Schubeler, West Chester; Danny L. Carnahan, Lebanon, and Dennis Grover O'Keefe, Cincinnati, all of Ohio, assignors to Cincinnati Milacron Inc., Cincinnati, Ohio

Filed Aug. 17, 1976, Ser. No. 715,146

Int. Cl.² G06F *15/46, 15/16*

U.S. Cl. 364—107 **17 Claims**

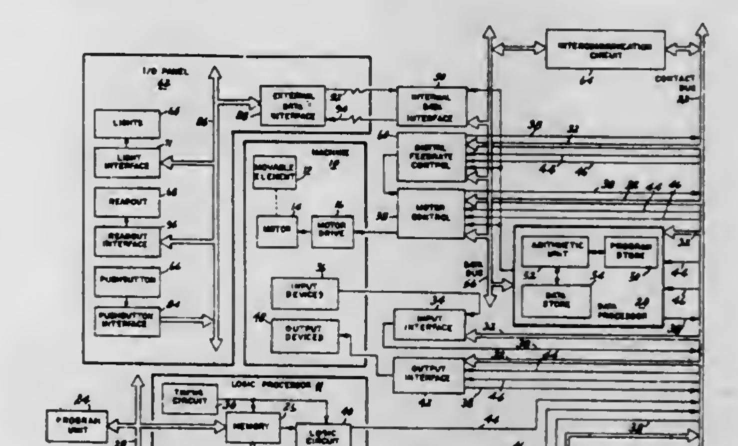

1. An apparatus for controlling a machine having first output devices responsive to output state signals for commanding machine operations and first input devices for producing input state signals in response to the machine operations, said machine including second I/O devices responsive to output data signals and producing input data signals, and said machine further having a movable element in mechanical communication with a driving mechanism, the apparatus comprising:

a. a programmable machine function controller means including

1. a contact bus for transferring the input and output state signals,
2. a data bus for transferring the input and output data signals,
3. logic processor means connected to the contact bus and responsive to the input state signals for executing stored

sets of logic instructions to generate the output state signals, and
4. data processor means connected between the contact bus and the data bus for generating the output data signals and a further input state signal by executing asynchronously with the logic processor means stored sets of arithmetic instructions in response to the input data signals and one of the output state signals;
b. an interface means connected to the controller means for controlling the transfer of the input and output state signals between the first input and output devices and the contact bus; and
c. means responsive to the controller means and connected to the driving mechanism for controlling the operation of the driving mechanism thereby controlling the operation of the movable element.

4,064,396
DYNAMIC LINEARIZATION SYSTEM FOR A RADIATION GAUGE
Joseph A. Panarello, Dickson City, Pa., assignor to Sangamo Weston, Inc., Springfield, Ill.
Filed Dec. 13, 1976, Ser. No. 750,029
Int. Cl.² G01N *23/16;* **H03K** *13/02*
U.S. Cl. 364—573 **11 Claims**

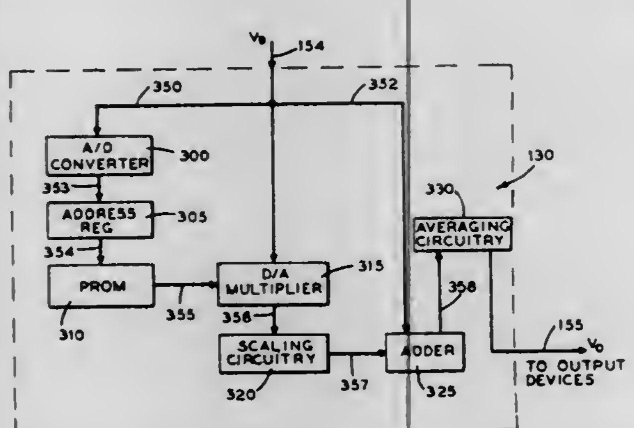

1. In a radiation gauge for measuring the thickness of objects, apparatus for converting a thickness representative non-linear analog signal to a thickness representative linear analog signal exhibiting the same degree of resolution inherent in said non-linear signal, comprising:
a. memory means for storing a set of precalculated correction coefficient signals each of which is associated with a preselected range of possible values for said non-linear signal;
b. addressing means responsive to said non-linear signal to address said memory and output the stored coefficient signal associated therewith;
c. correction term generator means, coupled to said memory means, responsive to both said non-linear signal and said output coefficient signal to develop a correction term signal exhibiting the same degree of resolution inherent in said non-linear signal; and
d. summing means, coupled to said generator means, responsive to said non-linear signal and said correction term signal to develop a linearized signal exhibiting the same resolution inherent in said non-linear signal.

4,064,397
AUTOMATIC EQUALIZER HAVING A COEFFICIENT MATRIX CIRCUIT
Hiroshi Sakaki, Tokyo; Sotokichi Shintani, Mitaka, and Hidemi Kuroda, Tokyo, all of Japan, assignors to Kokusai Denshin Denwa Co. Ltd., Tokyo, Japan
Filed June 24, 1976, Ser. No. 699,581
Claims priority, application Japan, June 24, 1975, 50-76432
Int. Cl.² G06F *15/34;* **H04B** *3/04*
U.S. Cl. 364—724 **6 Claims**

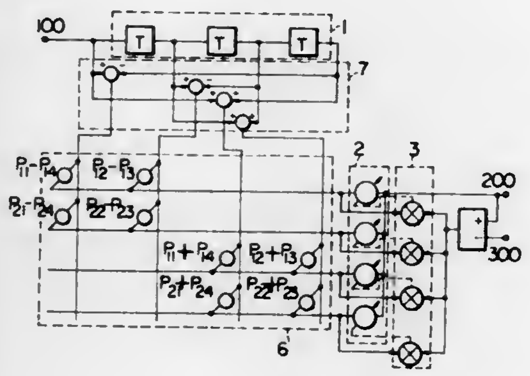

1. An automatic equalizer comprising a delay element train having a plurality of taps, one end of said train being connected to an input terminal, a coefficient matrix circuit having a symmetrical placement of elements which operate on each of the signals obtained from each tap of said delay element train through a plurality of adders and subtractors, multipliers providing a product of each tap output of a group of variable coefficient and an error signal between the output signal and the reference signal, a group of variable coefficient units controlled by said coefficient matrix circuit for providing an equalized output signal, a plurality of adders and subtractors provided at the input of said coefficient matrix circuit for adding pairs of signals to each other and subtracting pairs of signals from each other, said pairs of signals being obtained from outputs of taps of said delay element train.

4,064,398
ELECTRONIC CALCULATOR
Jyuji Kishimoto; Ichiro Sado, both of Tokyo, and Yuji Sano, Kawasaki, all of Japan, assignors to Canon Kabushiki Kaisha, Tokyo, Japan
Filed Mar. 18, 1975, Ser. No. 559,577
Claims priority, application Japan, Mar. 25, 1974, 49-33203
Int. Cl.² G06F *7/38*
U.S. Cl. 364—709 **15 Claims**

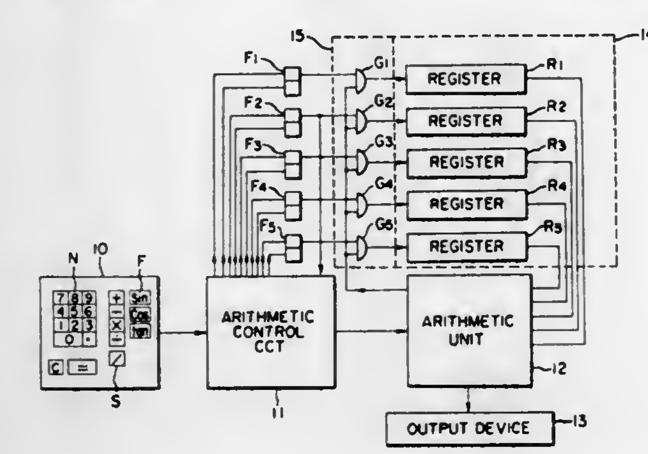

1. An electronic calculator comprising:
input means having a keyboard for entering numeric data;
instruction means for developing a signal to instruct distinction between integral and fractional parts of a mixed fraction in the numeric data wherein the fractional part is to be entered from said keyboard in the form of a fraction;
control means responsive to the signal from said instruction means for generating control signals to control an arithmetic operation associated with the numeric data comprising the mixed fraction;
discriminating means for discriminating between the integral and fractional parts of the mixed fraction according to the control signals from said control means; and
means for processing the integral and fractional parts discriminated by said discriminating means.

4,064,399
ELECTRONIC CALCULATOR HAVING KEYBOARD FOR ENTERING DATA
Susumu Muranaka, Tokyo, Japan, assignor to Nippon Electric Company, Ltd., Tokyo, Japan
Filed Mar. 31, 1976, Ser. No. 672,277
Claims priority, application Japan, Apr. 3, 1975, 50-45617
Int. Cl.² G06F *15/02*
U.S. Cl. 364—709 **11 Claims**

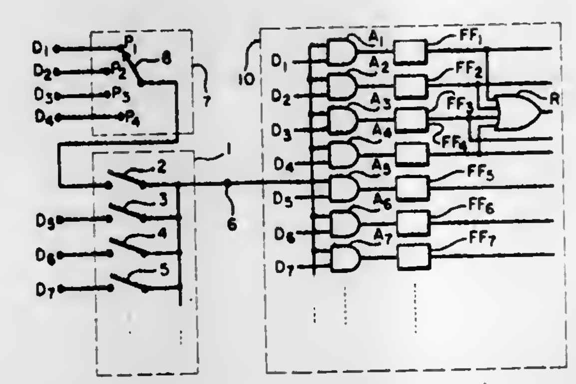

1. An electronic calculator comprising: a semiconductor integrated circuit having an arithmetic operation circuit, a control circuit and a terminal for receiving command signals for said operation and control circuits; a condition switch for generating a first command signal for said semiconductor integrated circuit, said switch being fixed to continue generating said first command signal once said switch is set to generate said first command signals; and an operation key for generating a second command signal for the calculator to perform a required arithmetic operation; wherein said operation key is connected between said condition switch and said terminal of said semiconductor integrated circuit, and said first and second command signals generated by said condition switch and said operation key are applied to said terminal of said semiconductor integrated circuit.

4,064,400
DEVICE FOR MULTIPLYING NUMBERS REPRESENTED IN A SYSTEM OF RESIDUAL CLASSES
Izrail Yakovlevich Akushsky, Volokolamskoe shosse, 1, kv. 119; Vladimir Mikhailovich Burtsev, prospekt Vernadskogo, 111, kv. 114, both of Moscow; Alken Nurmagambetovich Kazangapov, ulitsa Vinogradova, 61/67, and Ivan Timofeevich Pak, prospekt 50-letia Oktyabrya, 82/90, kv. 27, both of Alma-Ata, all of U.S.S.R.
Filed Mar. 19, 1976, Ser. No. 668,611
Claims priority, application U.S.S.R., Mar. 25, 1975, 2114928
Int. Cl.² G06F *7/52*
U.S. Cl. 364—746 **9 Claims**

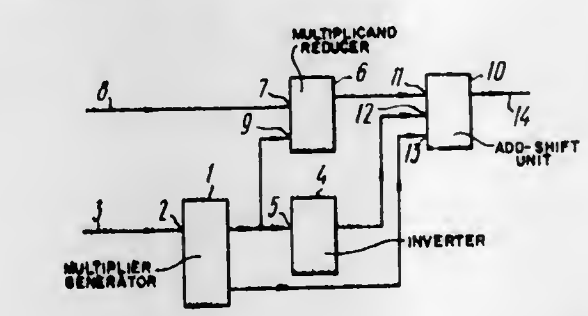

1. A multiplying device comprising: a multiplicand bus; a multiplier bus; a product bus; a multiplier generator for sequential generation of a multiplier;
an input and outputs of said multiplier generator;
said input of said multiplier generator being connected to said multiplier bus;
an inverter; an input and an output of said inverter;
said input of said inverter being connected to said first output of said multiplier generator;
a multiplicand reducer for reducing the multiplicand to the required form;
a first and a second input and an output of said multiplicand reducer;
said first input of said multiplicand reducer being connected to said multiplicand bus;
an add-shift unit for obtaining the product;
a first, a second and a third input and an output of said add-shift unit;
said first input of said add-shift unit being connected to said output of said multiplicand reducer;
said second input of said add-shift unit being connected to said output of said inverter for controlling the operations of addition and shifting of the multiplicand as well as the product, both being represented in the system of residual classes;
said third input of said add-shift unit being connected to said second output of said multiplier generator for controlling transfer of the product to said product bus;
said output of said add-shift unit being connected to said product bus;
said second input of said multiplicand reducer being connected to said output of said multiplier generator for the multiplicand represented in the system of residual classes to be transferred to said add-shift unit.

4,064,401
HEADHOLDER ASSEMBLY
Danny Alden Marden, 5005 Fillmore Ave., No. 10, Alexandria, Va. 22311
Filed Feb. 4, 1976, Ser. No. 654,998
Int. Cl.² H01J *37/20*
U.S. Cl. 250—456 **8 Claims**

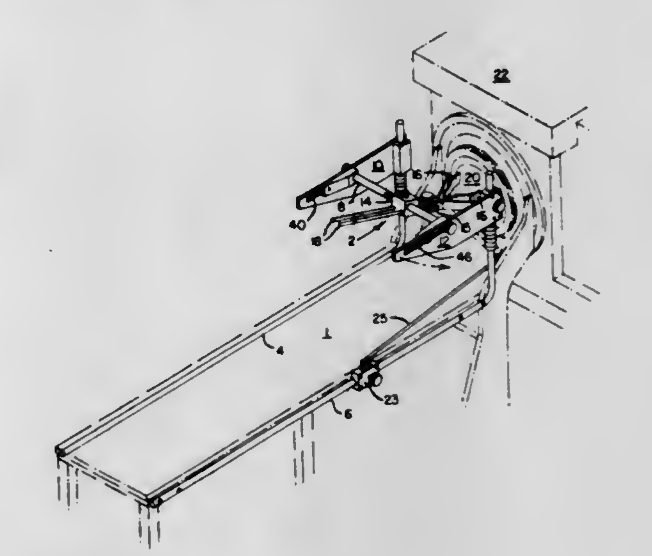

1. In combination:
first and second support arms,
connecting means extended between said support arms,
an elongated member having attached to one end thereof means adapted to fit a portion of a human head,
clamping means having means by which to receive said connecting means and said elongated member in substantially perpendicular directions with respect to one another,
means to respectively join each end of said connecting means to said first and second support arms
at least one end of said connecting means having a sleeve portion formed therein, and

spacer means,
said spacer means connected between said sleeve portion and said means to join so as to selectively vary the length of said connecting means between said first and second support arms.

4,064,402
METHOD AND APPARATUS FOR SUPPRESSING THE VISIBLE RADIATION EMITTED BY A SOURCE OF INFRA-RED RADIATION
Mario Posnansky, Pappelweg 4, Ostermundigen, Switzerland (3072)
Filed May 10, 1976, Ser. No. 685,022
Claims priority, application Switzerland, May 16, 1975, 6340/75
Int. Cl.² G01J *1/00*
U.S. Cl. 250—504 **4 Claims**

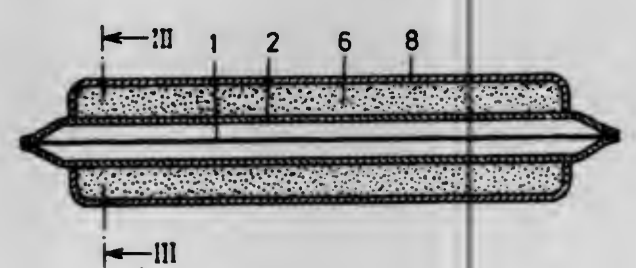

1. Apparatus for suppressing the visible portion of the radiation emitted by a source of infra-red radiation comprising a glass tube enclosing said source, at least one transparent envelope surrounding and spaced from said source and a gas or a mixture of gases having an absorption spectrum in the visible wave band enclosed in the space between said glass tube and said envelope.

4,064,403
RIM-TYPE HYDROELECTRIC MACHINE
Helmut Miller, Niederrohrdorf, Switzerland, assignor to Escher Wyss Limited, Zurich, Switzerland
Filed Nov. 23, 1976, Ser. No. 744,350
Claims priority, application Switzerland, Dec. 2, 1975, 15609/75
Int. Cl.² F01D *7/00, 15/10;* **H02K** *7/18*
U.S. Cl. 290—52 **15 Claims**

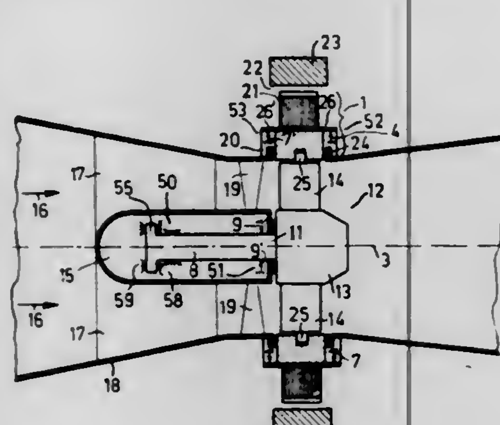

1. A hydroelectric machine comprising
a. a tube-type hydraulic machine having a guide blade lattice hub, a bladed wheel which rotates about a horizontal axis and carries adjustable, radially extending blades, and a shaft which is connected with the bladed wheel, extends into said hub, and has a free end in the hub;
b. an annular rim surrounding the bladed wheel and in which the external ends of the adjustable wheel blades are pivotably mounted;
c. an electrical machine surrounding the rim and having a rotor secured to the rim, the rotor and rim forming a rotating unit, and said unit and bladed wheel forming a rotating set;
d. first bearing means providing sole radial support for the rotating unit and consisting exclusively of hydrostatic devices which support without physical contact; and
e. second and third radial bearing means acting on the shaft, the second bearing means being located at said free end of the shaft and the third bearing means being located adjacent the bladed wheel,
f. the second bearing means and one of the first and third bearing means serving to center said rotating set with respect to the axis of rotation and being the only bearing means which perform this function, and
g. the remaining bearing means producing a constant supporting force when there are slow radial movements of said rotating set and a progressively increasing supporting force when there are sudden radial movements of that set.

4,064,404
ACCESSORY FOR A GARAGE DOOR OPENER
Colin Barns Willmott, Des Plaines, and James D. Stifle, Lombard, both of Ill., assignors to Chamberlain Manufacturing Corporation, Chicago, Ill.
Filed Apr. 19, 1976, Ser. No. 678,066
Int. Cl.² H03K *17/26*
U.S. Cl. 307—141.4 **6 Claims**

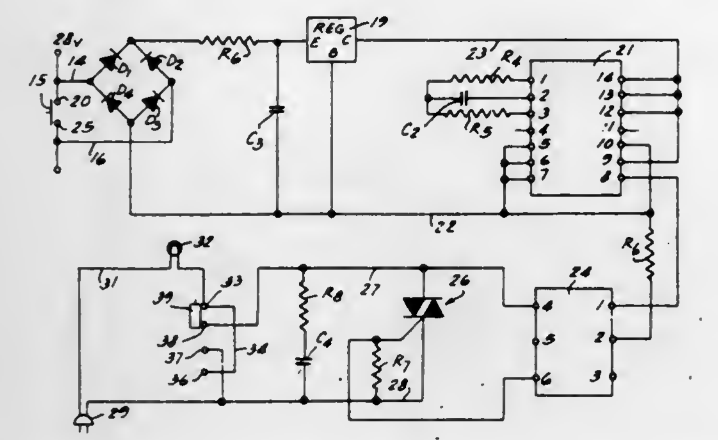

1. An accessory circuit for a garage door opener comprising:
a high voltage power supply,
a load,
a triac switch connected in series with said load to said high voltage power supply,
a gate signal circuit connected to the gate of said triac switch,
a low voltage AC power supply,
an actuating switch connected to said low voltage power supply,
an oscillator-timer connected to said low voltage power supply and reset when said actuating switch is closed,
an output of said oscillator-timer connected to said gate signal circuit,
including a diode bridge rectifier connected between said low voltage power supply and said oscillator-timer, including a resistor and capacitor connected to said oscillator-timer circuit to control its timing cycle, and including a voltage regulator connected between said diode bridge rectifier and said oscillator-timer.

4,064,405
COMPLEMENTARY MOS LOGIC CIRCUIT
James R. Cricchi, Catonsville, and Michael D. Fitzpatrick, Glen Burnie, both of Md., assignors to Westinghouse Electric Corporation, Pittsburgh, Pa.
Filed Nov. 9, 1976, Ser. No. 740,267
Int. Cl.² H03K *19/08, 19/40*
U.S. Cl. 307—205 **4 Claims**

1. An inverter circuit having at least one input terminal and at least one output terminal, comprising:

a. a first p-channel MOS transistor having its source coupled to said at least one input terminal of said inverter circuit and its gate coupled to a first reference voltage;
b. a first n-channel MOS transistor having its drain connected to the drain of said first p-channel MOS transistor and its gate and source to a second reference voltage;
c. a capacitor coupled between the drain and source of said first p-channel MOS transistor;
d. a second p-channel MOS transistor having its source

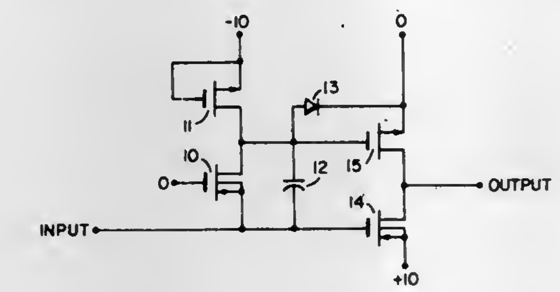

coupled to a third reference voltage and its gate to said at least one input terminal;
e. a second n-channel MOS transistor having its drain coupled to the drain of said second p-channel MOS transistor to form said at least one output terminal of said inverter and its gate coupled to the junction formed by connecting the drain of said first p-channel MOS transistor to the drain of said first n-channel MOS transistor; and
f. a diode coupled between the gate and source of said second n-channel MOS transistor.

4,064,406
GENERATOR FOR PRODUCING A SAWTOOTH AND A PARABOLIC SIGNAL
Robert Tiemeijer, Eindhoven, Netherlands, assignor to U.S. Philips Corporation, Briarcliff Manor, N.Y.
Filed July 26, 1976, Ser. No. 708,865
Claims priority, application Netherlands, Aug. 11, 1975, 7509525
Int. Cl.² H03K *4/08, 4/84*
U.S. Cl. 307—228 **6 Claims**

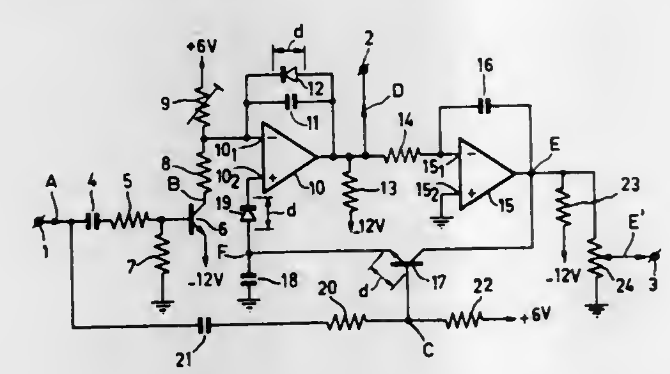

1. A generator for producing a sawtooth and a separate parabolic signal, said generator comprising a first integrating circuit a second integrating circuit direct current coupled to said first circuit, each circuit comprising a difference amplifier and a capacitor in a feedback path from an output to an inverting input of the same difference amplifier, and a peak detection circuit coupled from the second circuit difference amplifier output to a non-inverting input of the difference amplifier in the first integrating circuit.

4,064,407
PULSE VOLTAGE REGULATOR
John J. Kelleher, Malden, Mass., assignor to The United States of America as represented by the Secretary of the Army, Washington, D.C.
Filed Dec. 20, 1976, Ser. No. 752,593
Int. Cl.² H03K *5/08*
U.S. Cl. 307—268 **6 Claims**

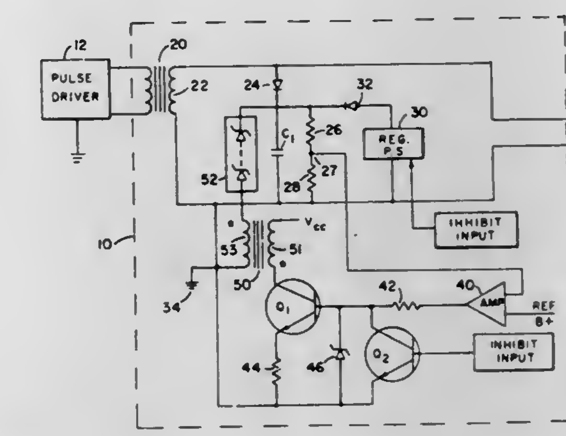

1. A pulse voltage regulator comprising: a transformer having a primary winding disposed to receive pulses of high voltage energy and a secondary winding disposed for providing output load pulses in response to input pulses; in series, a diode and a capacitance coupled across said transformer secondary, the anode of said diode being coupled to one side of said transformer; a resistance network coupled across said capacitance; a zener diode and switching means coupled in series across said capacitance for selectively discharging said capacitance to a predetermined level.

4,064,408
METHOD AND APPARATUS FOR DETECTION OF WAVEFORM PEAKS AND SLOPES
Wai-Leung Hon, and Henry B. Patterson, Jr., both of Houston, Tex., assignors to Texas Instruments Incorporated, Dallas, Tex.
Continuation of Ser. No. 126, Jan. 2, 1970, abandoned. This application Jan. 10, 1972, Ser. No. 216,753
Int. Cl.² H03K *5/153*
U.S. Cl. 307—351 **9 Claims**

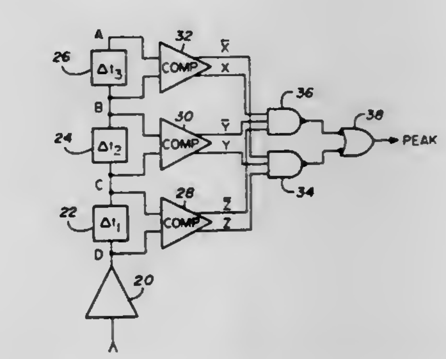

1. A system for providing a digital representation of an input analog waveform, comprising:
a. a plurality of comparator means for comparing various magnitudes of said analog waveform with later occurring magnitudes thereof;
b. first logic means responsive to the outputs of said comparator means according to a first prescribed logic code to indicate the occurrence of a positive wave peak; and
c. second logic means responsive to the outputs of said comparator means according to a second prescribed logic code to indicate the occurrence of a negative wave peak.

4,064,409
FERROFLUIDIC ELECTRICAL GENERATOR
Charles M. Redman, 2020 Huntington Drive, Las Cruces, N. Mex. 88001
Filed July 28, 1976, Ser. No. 709,356
Int. Cl.² H02N *4/00*
U.S. Cl. 310—306 **5 Claims**

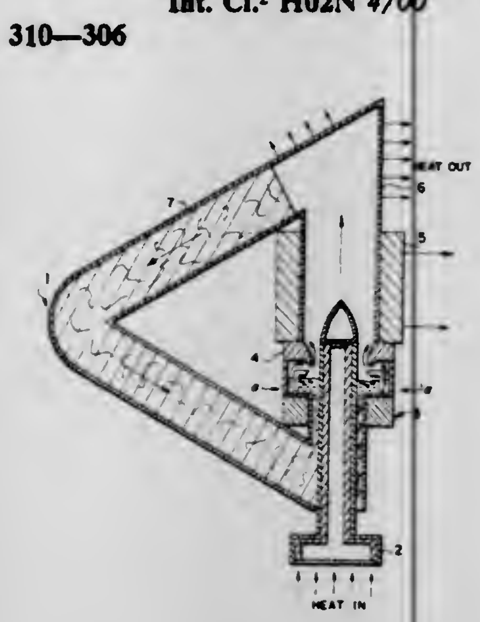

1. A ferrofluidic electrical generator comprising a pump having a closed circuit flow path containing a ferrofluidic medium, magnet means surrounding a first portion of said flow path, solenoid means surrounding a second portion of said path located downstream of said first portion, means for applying heat to said medium upstream of said solenoid means, a venturi stage in said flow path, and means supplying heat to said venturi stage means whereby said medium is caused to travel about said closed circuit path so as to directly produce electrical output from said solenoid, said venturi stage being located upstream of said solenoid and comprising: a reservoir for said medium opening upwardly into said flow path through a venturi passage, a lateral passage means for directing liquid ferrofluidic medium into said reservoir opening in a transverse direction, and by-pass passage means communicating at one end with a lower portion of said reservoir and communicating at the other end with said lateral passage means, whereby liquid ferrofluidic medium said reservoir will be remixed with vapor ferrofluidic medium in said venturi passage.

4,064,410
SQUIRREL CAGE ROTOR AND METHOD OF MAKING SAME
Thomas Allen Roach, Denver, N.C., assignor to Service First, Inc., Charlotte, N.C.
Filed Apr. 22, 1975, Ser. No. 570,511
Int. Cl.² H02K *3/06*
U.S. Cl. 310—211 **12 Claims**

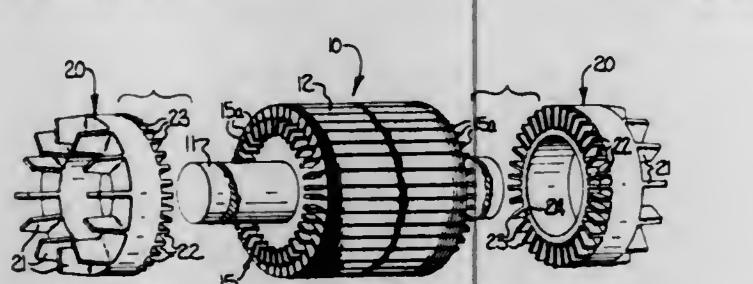

1. In a rotor for use in a dynamoelectric machine and comprising a shaft, a generally cylindrical lamintated magnetic core carried by said shaft, a plurality of arcuately spaced apart rotor bars carried by said core and having end portions protruding beyond the end laminations at opposite ends of said core, and a pair of end rings disposed at opposite ends of said core and connected to the protruding end portions of said rotor bars, with each end ring having an axially facing inner end portion facing said core, the improvement wherein the inner end portion of each of said end rings includes a series of arcuately spaced radially extending ribs therearound with intervening radially extending channels being defined therebetween, the protruding end portions of said rotor bars being located in said channels and said series of ribs bearing tightly against the end laminations at opposite ends of said laminated core to maintain the laminated core to tightly compressed condition, and means in said channels securing the rotor bars to the end rings.

4,064,411
X-RAY TUBE FOR ANALYTIC USE
Kenji Iwasaki, Yokohama; Tsuna Sawa, Fujisawa, and Sotaro Hijikata, Yokohama, all of Japan, assignors to Tokyo Shibaura Electric Co., Ltd., Kawasaki, Japan
Filed Dec. 17, 1976, Ser. No. 751,678
Claims priority, application Japan, Dec. 20, 1975, 50-152492
Int. Cl.² H01J *35/00*
U.S. Cl. 313—32 **9 Claims**

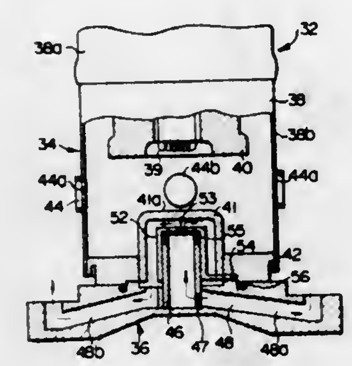

1. An X-ray tube for analytic use which comprises an anode hermetically secured to one end of an air-sealed envelope and having a bottomed cylindrical target whose bottom is provided at its outer surface with an electron-impact surface on which electrons emitted from a cathode impinge, a cooler detachably fitted to an outer surface of the anode and having an upright pipe projected into the target and a fluid passage for cooling medium which flows from the tip end of the pipe thereinto and is released to a backside surface of the target corresponding to the electron-impact surface a bottomed cylindrical nozzle disposed between the pipe and target and having at its bottom part a slit having substantially the same shape and size as that of a focus formed on the electron-impact surface, and fitting means for detachably fitting the nozzle to the anode in a relation permitting the slit to be aligned with the focus.

4,064,412
CATHODE RAY TUBE BASE
Alfred D. Johnson, Seneca Falls, N.Y., assignor to GTE Sylvania Incorporated, Stamford, Conn.
Filed July 2, 1976, Ser. No. 702,095
Int. Cl.² H01J *5/48, 5/50*
U.S. Cl. 313—318 **3 Claims**

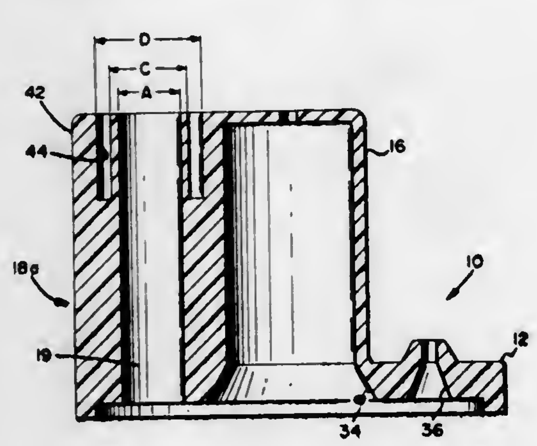

1. A base for a cathode ray tube comprising: a substantially flat, circular rim having a given diameter; a plurality of tube pin receiving apertures extending through said rim, said apertures being spaced inwardly from the outer circumference of said rim and being annularly arrayed; a hollow, substantially centrally located crown positioned on said rim and projecting therefrom adapted to receive the terminus of an exhaust tubulation; and at least one tube pin isolating means associated with at least one of said tube pin receiving apertures; said isolating means comprising an elongated, circumferential wall extending outwardly from said rim and forming an integral extension with the wall of said crown and being substantially the same height as said crown, and further having a first diameter substantially larger than the diameter of said tube pin extending substantially the full height of said wall; and a second diameter and a third diameter concentric with said first diameter forming a circular slot about said first diameter, said slot having a height substantially less than the height of said wall.

4,064,413
RELAY ADAPTER CIRCUIT FOR TRAILER LAMPS
Poul H. Andersen, Royal Oak, Mich., assignor to Chrysler Corporation, Highland Park, Mich.
Filed Sept. 22, 1975, Ser. No. 615,437
Int. Cl.² H05B *37/00, 39/09*
U.S. Cl. 315—77 **5 Claims**

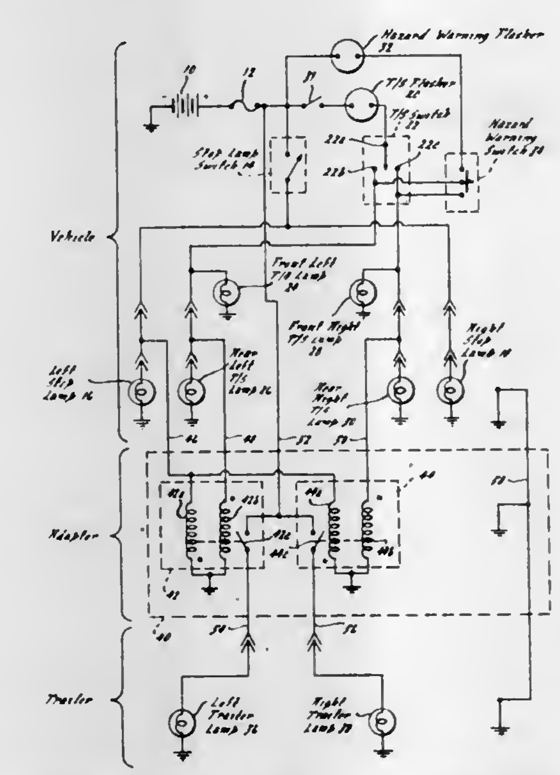

1. In a vehicle having an existing stop lamp system which is controllably energizable from the vehicle battery to controllably energize a stop lamp thereof and having an existing turn signal lamp system which is controllably energizable to controllably intermittently energize a turn signal lamp thereof from the battery, in combination with a vehicle towed by said first-named vehicle and having a signal lamp, an adapter unit for electrically coupling the towed vehicle signal lamp with the stop lamp and turn signal lamp systems of the first-named vehicle, said adapter unit comprising:

- a circuit for electrically coupling said signal lamp with the battery and not with the vehicle stop lamp system nor with the vehicle turn signal lamp system, said circuit including switch means for electrically coupling said signal lamp with the vehicle battery such that when the switch means is actuated, the signal lamp is energized from the battery and when the switch means is not actuated, the signal lamp is not energized from the battery;
- means for controlling the actuation of said switch means comprising first and second control elements each of which is adapted to be energized from the battery, means coupling said first control element with the stop lamp system, such that said first control element is energized from the battery whenever the stop lamp is energized, means coupling the second control element with the turn signal lamp system such that said second control element is energized from the battery whenever the turn signal lamp is energized, and means coupling said two control elements and said switch means together such that when neither of said control elements is energized, said switch means is not actuated, and hence the signal lamp is not energized, when only one of said control elements is energized, said switch means is actuated to energize the signal lamp from the vehicle battery and when both said control elements are energized, said switch means is not actuated to thereby prevent said signal lamp from being energized.

4,064,414
APPARATUS FOR SIMULATING THE LIGHT PRODUCED BY A FIRE
Haven E. Bergeson, and Mark W. Fuller, both of Salt Lake City, Utah, assignors to FBW Enterprises, Salt Lake City, Utah
Filed Jan. 31, 1977, Ser. No. 764,396
Int. Cl.² H05B *37/02, 41/44*
U.S. Cl. 315—208 **20 Claims**

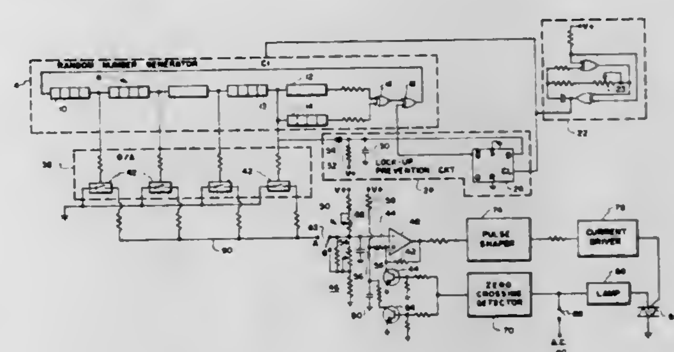

1. Apparatus for controlling the application of electrical current from a power source to a lamp to simulate the light output of a fire comprising

- random number generating means for successively producing randomly varying digital signals in response to an oscillatory signal, with the rate of producing the digital signals being determined by the frequency of the oscillatory signal,
- oscillator means for applying an oscillatory signal to said random number generating means, said oscillator means including manually adjustable means by which the frequency of the oscillator signal may be varied,
- digital-to-analog converter means coupled to said random number generating means for producing an analog signal whose magnitude is generally proportional to the value of the digital signals produced by the random number generating means,
- lamp means coupled to the power source for producing light when current is applied thereto,
- a switching device having a pair of power electrodes connected in series with the lamp means and power source, and having a control electrode, and
- control means responsive to said analog signal for applying a control signal to the control electrode of said switching device to thereby cause the switching device to conduct current between the power electrodes thereof to apply current to the lamp means, the amount of current conducted being determined by the magnitude of said analog signal

4,064,415
INDUCTIVE SPARK IGNITION FOR COMBUSTION ENGINE
Paul Albert Blackington, Afton, N.Y., assignor to The Bendix Corporation, Southfield, Mich.
Filed Feb. 18, 1976, Ser. No. 658,957
Int. Cl.² H05B *37/02, 39/04, 41/36*
U.S. Cl. 315—209 T **10 Claims**

1. An untimed ignition system having a high voltage transformer connected to an igniter plug, comprising first semicon-

ductor switching means having an input and an output, said output connecting the transformer to a voltage source for controlling current through the transformer for firing the igniter plug, second semiconductor switching means having an input and an output, said output connected to the input of the first semiconductor switching means for controlling current through the first semiconductor switching means, first circuit means connected between the output of first semiconductor switching means and the input of the second semiconductor

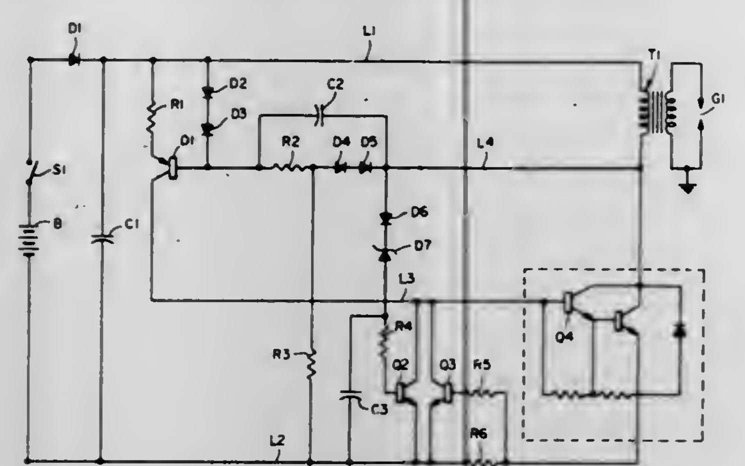

switching means for operating the second switching means to positively turn off the first switching means at the start of an igniter plug firing period and in response to a signal from the output of the first switching means and second circuit means having an input connected to the first switching means for sensing a predetermined voltage level across the first switching means and having an output connected directly to the input of the first switching means to positively maintain the first switching means turned off during igniter plug firing until energy in the firing circuit is dissipated.

4,064,416

STARTING AND OPERATING DEVICE FOR A HIGH PRESSURE DISCHARGE LAMP

Horst Krense, Ottobrunn, and Alexander Dobrusskin, Taufkirchen, both of Germany, assignors to Patent-Treuhand-Gesellschaft fur Elektrische Gluhlampen mbH, Munich, Germany

Filed Apr. 13, 1976, Ser. No. 676,448

Claims priority, application Germany, Apr. 22, 1975, 2517818

Int. Cl.² H01J *17/34;* H05B *41/19*

U.S. Cl. 315—261 **16 Claims**

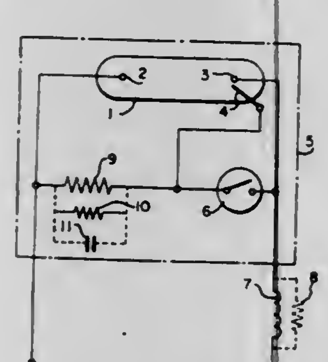

1. A starting and operating device in combination with a high pressure discharge lamp of the mercury vapor, metal halide additive type, said discharge lamp including at least one starting electrode positioned near one of the pair of spaced main electrodes within the discharge vessel; said starting and operating device including an ignition circuit having an inductance therein and first and second bridging circuits; said first bridging circuit interconnecting said starting electrode and the main electrode remote from said starting electrode and said second bridging circuit interconnecting said starting electrode and the adjacent main electrode; each of said first and second bridging circuits being external of said discharge vessel and said first bridging circuit comprising a current-limiting electrical component and said second bridging circuit including a switching element whereby said circuit for ignition of the lamp is repeatedly closed and interrupted in alternation during starting and remains closed during operation of the lamp.

4,064,417

SYSTEM FOR STABILIZING CATHODE RAY TUBE OPERATION

Clyde Smith, North Salem, N.Y., assignor to Thomson-CSF Laboratories, Inc., Stamford, Conn.

Division of Ser. No. 572,169, April 28, 1975, Pat. No. 4,012,775. This application Nov. 11, 1976, Ser. No. 741,025

Int. Cl.² H05B *41/36*

U.S. Cl. 315—309 **2 Claims**

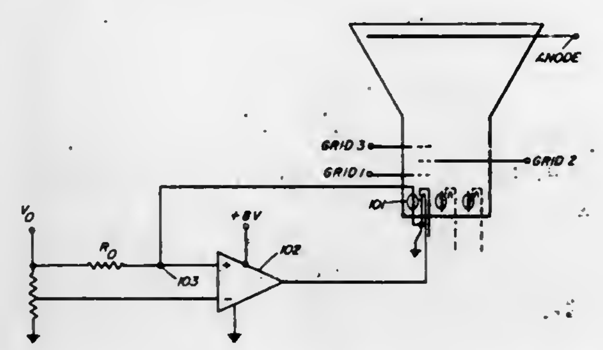

1. In a video display apparatus which includes a cathode ray tube having at least one electron gun having a cathode and a cathode heater; a system for stabilizing the display intensity attributable to said electron gun, comprising:

means for sensing the temperature of the cathode of said electron gun and for generating a signal in accordance with the sensed temperature;

means for comparing said signal with a reference value;

means for generating a control signal which reflects the comparison; and

means for energizing said cathode heater in accordance with said control signal.

4,064,418

CONTROLLED ARC STREAM IN HIGH INTENSITY DISCHARGE LAMPS

Joseph P. Kearney, Teaneck, N.J., assignor to Westinghouse Electric Corporation, Pittsburgh, Pa.

Filed Nov. 4, 1975, Ser. No. 628,728

The portion of the term of this patent subsequent to Sept. 13, 1975, has been disclaimed.

Int. Cl.² H05B *41/14;* H01J *17/14*

U.S. Cl. 315—348 **4 Claims**

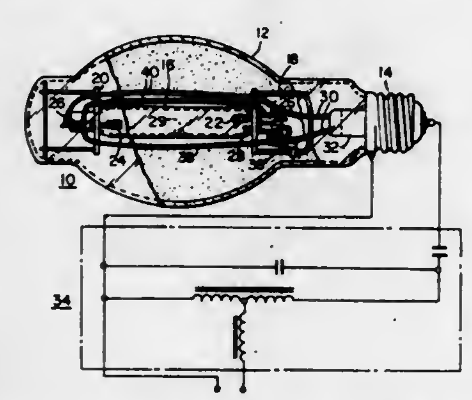

1. In combination with a high-intensity discharge lamp comprising an elongated arc tube having electrodes operatively positioned proximate the ends thereof and enclosing a discharge-sustaining filling, the spacing between said electrodes within said arc tube defining an arc path along which an operating arc is adapted to be maintained during operation of said lamp, a light-transmitting envelope surrounding said arc tube, electrical lead-in conductors sealed through said surrounding envelope and said arc tube and electrically connected to said electrodes, and said lamp adapted to be operated with said arc tube other than substantially vertical, the improvement which comprises:

said lead-in conductors formed of refractory metal and positioned inside of said surrounding envelope and outside and in close proximity to said arc tube, and said lead-in conductors electrically connected in series circuit with said arc path; and

when said lamp is operated with said arc tube other than substantially vertical, at least one elongated portion of said lead-in conductors is located below said arc tube and electrically connected to carry current in a direction the same as the current in said operating arc, and at least two elongated portions of said lead-in conductors are positioned above said arc tube and electrically connected to carry current in a direction opposite to the current in said operating arc; whereby the magnetic effect from the current in both the conductor portions above the arc tube and the conductor portion below the arc tube tends to counteract the natural upward bowing of the operating arc.

4,064,419

SYNCHRONOUS MOTOR KVAR REGULATION SYSTEM

Robert S. Peterson, Williamsville, N.Y., assignor to Westinghouse Electric Corporation, Pittsburgh, Pa.

Filed Oct. 8, 1976, Ser. No. 730,889

Int. Cl.² H02P *7/36*

U.S. Cl. 318—179 **2 Claims**

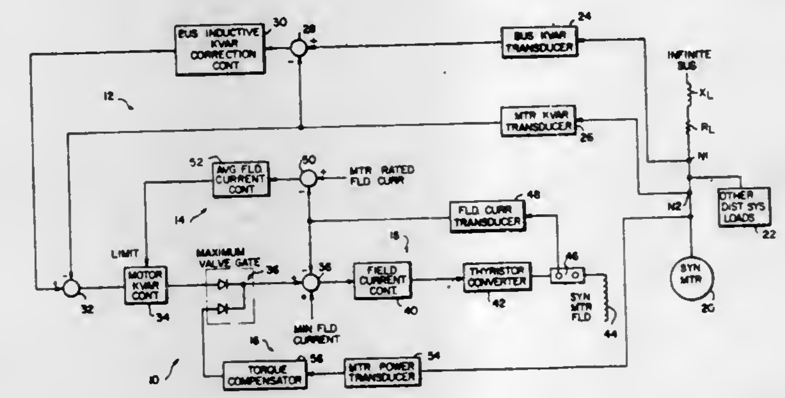

1. A system for regulating the inductive KVARS demanded by a power distribution line comprising:

a. a synchronous motor connected to the power distribution line;

b. a field current control loop connected to the field winding of said synchronous motor;

c. means coupled to said power distribution line for deriving a signal which is a function of the inductive KVARS demanded by the other loads on said power distribution line;

d. KVAR controller means for receiving said derivative inductive KVAR signal and for delivering a compensating KVAR signal to said field current control loop to overexcite said synchronous motor to deliver capacitive KVARS to said power distribution line;

e. field current thermal control means coupled to said field current control loop, for receiving a maximum field current signal and for delivering a limit signal to said KVAR controller to inhibit the output signal for said KVAR controller when the average field current exceeds said maximum field current signal; and

f. torque compensator means coupled to the armature of said synchronous motor and connected to deliver a minimum field current to said field current control loop to insure that the synchronous motor will remain in synchronism during normal peak loads, all in the order of priority: first, synchronism control, next, field thermal control, and finally, compensating KVAR control.

4,064,420

CONTROL SYSTEM FOR POLE-CHANGING-MOTOR-DRIVEN COMPRESSOR

Jiro Yuda, Nara; Hiroshi Morokoshi; Michimasa Hori, both of Yamatokooriyama; Mitsuhiro Ikoma, Tenri, and Takeshi Aizawa, Ikoma, all of Japan, assignors to Matsushita Electric Industrial Co., Ltd., Japan

Filed Apr. 12, 1976, Ser. No. 675,827

Claims priority, application Japan, Apr. 18, 1975, 50-47719; May 19, 1975, 50-60416; Sept. 16, 1975, 50-112437; Sept. 30, 1975, 50-118372

Int. Cl.² H02P *1/44*

U.S. Cl. 318—224 A **18 Claims**

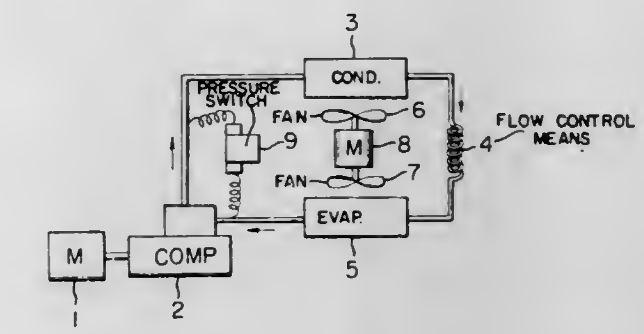

1. A control system for a motor-driven compressor, comprising:

a. a two-speed motor capable of driving said compressor, at a high speed and at a low speed,

b. first control means for changing the speed of said motor and for temporarily interrupting the power supply to said motor during said speed changing, thereby stopping said compressor,

c. electrical switching means coupled to said compressor, said switching means having a first position for a predetermined time interval after said compressor has stopped. and a second position after said predetermined time interval has expired,

d. second control means including a self-latching circuit actuable in response to an electrical signal from said switching means to couple said power supply to said motor,

said motor remaining stopped during said speed changing, being enabled to start again after said predetermined time interval of said switching means, and being supplied with power regardless of the position of said switching means once said motor is started again.

4,064,421

HIGH SPEED MODULAR ARITHMETIC APPARATUS HAVING A MASK GENERATOR AND A PRIORITY ENCODER

Daniel Danko Gajski, Philadelphia; Bhalchandra Ramchandra Tulpule, Frazer, and Chandrakant Ratilal Vora, Audubon, all of Pa., assignors to Burroughs Corporation, Detroit, Mich.

Filed July 22, 1976, Ser. No. 707,603

Int. Cl.² G06F *7/38*

U.S. Cl. 364—716 **6 Claims**

1. A high speed arithmetic apparatus for executing a selected arithmetic calculation upon a binary coded integer comprising:

first means for receiving the binary coded integer and for outputting in parallel a tally coded representation thereof;

second means for receiving in parallel a tally coded input and for outputting in parallel a binary coded representation thereof; and

third means interconnecting the parallel output of said first means and the parallel input of said second means said

third means for providing at the parallel output of said second means a binary coded resultant of the selected

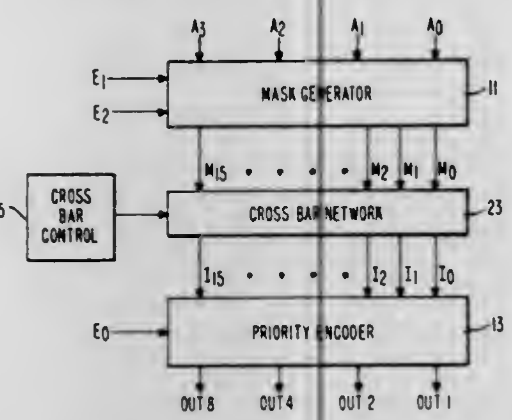

arithmetic calculation executed upon the binary coded integer received by said first means.

4,064,422
WEIGHT MULTIPLIER FOR USE IN AN ADAPTER PROCESSOR
Raymond J. Masak, E. Northport, N.Y., assignor to The United States of America as represented by the Secretary of the Air Force, Washington, D.C.
Filed Aug. 31, 1976, Ser. No. 719,313
Int. Cl.² H04B *3/04;* G06G *7/16*
U.S. Cl. 364—841 3 Claims

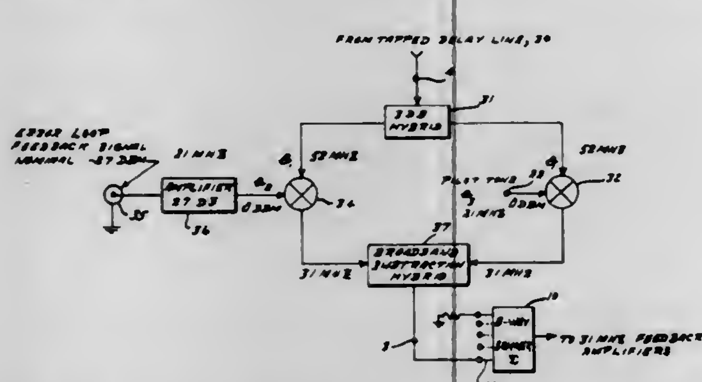

1. In an adaptive processor, a weight multiplier being comprised of a hybrid receiving an input signal of predetermined frequency and phase, said hybrid splitting said input signal into first and second signals of equal level and equal phase, first and second mixers receiving said first and second signals, respectively, said first mixer simultaneously receiving a CW pilot tone signal of a first preselected frequency, said CW pilot tone signal performing the function of a local oscillator at a high level, said second mixer simultaneously receiving for local oscillator purposes a signal being an amplified version of a loop error signal in said adaptive processor, a broadband subtraction hybrid receiving the outputs from said first and second mixers and providing a resultant signal therefrom for use in said adaptive processor.

4,064,423
DIGITAL SYSTEM AND METHOD FOR GENERATING ANALOG CONTROL SIGNALS
James B. Atkisson, Jr., Santa Clara, Calif., assignor to Applied Materials, Inc., Palo Alto, Calif.
Filed Dec. 12, 1975, Ser. No. 640,046
Int. Cl.² G06G *7/28*
U.S. Cl. 364—718 14 Claims

1. In a method utilizing digital storage means, signal processing circuitry and a digital-to-analog converter for generating an analog control signal having an amplitude which varies with time according to a predetermined waveform, the steps of: storing a plurality of amplitude signals representative of the changes in amplitude between predetermined points in the analog waveform, storing a plurality of time signals representative of the time intervals between the predetermined points, providing pulses at rates corresponding to successive ones of the stored amplitude signals, counting the pulses and providing an output pulse each time the count reaches a number corresponding to one of the stored time signals, converting the output pules to an analog output signal which advances in

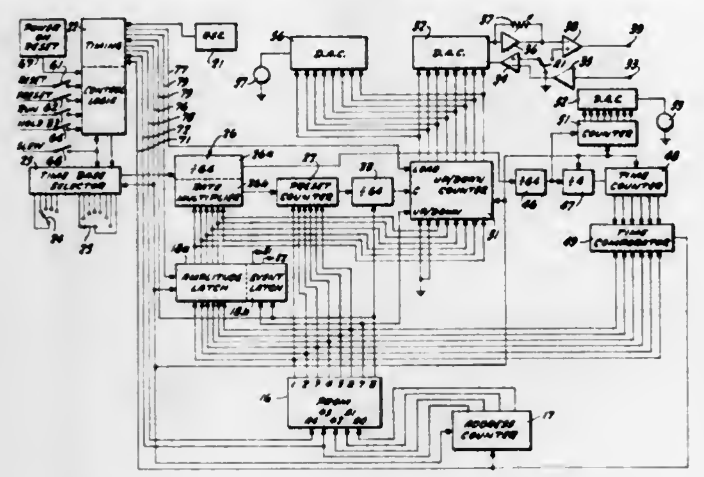

stepwise fashion along line segments interconnecting the predetermined points, storing a jump signal indicative of the occurrence of an instantaneous change in the amplitude of the analog signal and converting one of the stored amplitude signals directly to analog form to provide the output signal in response to the jump signal.

4,064,424
VISUAL GLIDE PATH BEACON SYSTEM
Rudolf C. Hergenrother, 45 Hidden River Lane, Rte. 2, Sarasota, Fla. 33577
Filed Jan. 26, 1977, Ser. No. 762,579
Int. Cl.² B64F *1/20;* G08G *5/00*
U.S. Cl. 362—231 3 Claims

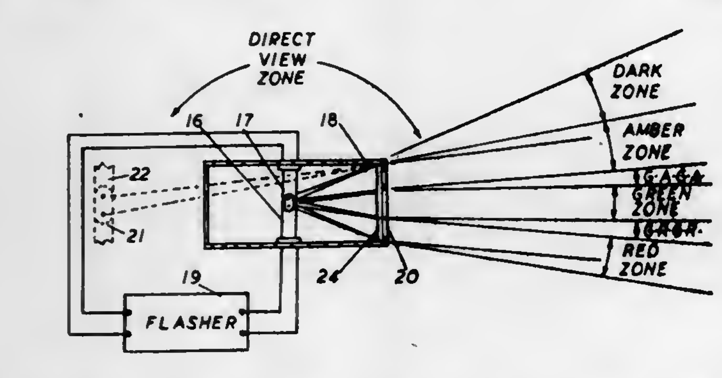

1. A visual approach slope indicator beacon comprising in combination:

a. a rectangular transparent box-like enclosure (18) with defined top, bottom, front end and back ends;
b. a filter (20) an a convex lens (24) at said front end, said filter (20) providing amber, green and red beacon sections;
c. first and second light means (16, 17) having their filaments positioned at slightly different angles relative to the filter with flasher means coupled to said light means (16, 17); and,
d. a mirror (23) with a central rectangular aperture positioned midway between the real lamp and its virtual image produced by the lens.

4,064,425
LIGHTING PROJECTOR
André A. Masson, Saint-Heand, France, assignor to Etablissements Pierre Angenieux, Paris, France
Filed Jan. 14, 1977, Ser. No. 759,400
Claims priority, application France, Jan. 21, 1976, 76.01538
Int. Cl.² A61B *1/06*
U.S. Cl. 362—33 3 Claims

1. A lighting projector comprising a star-shaped arrangement of a plurality of basic elements of elongated configuration, rigid with a case disposed in the central portion of said projector and radiating therearound, a plurality of light sources disposed in said central portion, each basic element comprising a first reflecting mirror located adjacent its outer end, opposite said central case and inclined towards the surface to be illuminated, an optical system disposed in the path of the light beam issuing from one of said light sources and directed towards a first reflection mirror disposed at the outer end of

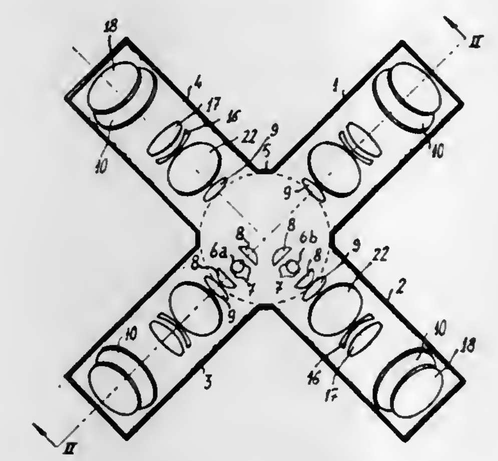

the corresponding basic element, said optical system being adapted to form the image of the corresponding light source onto the surface to be illuminated after causing said image to be reflected by said mirror, a second reflecting mirror also disposed in the path of said light beam and capable of returning one portion of the light rays towards the plane to be illuminated while allowing the other fraction of said light rays to pass towards said first reflection mirror located at the end of the element concerned.

4,064,426
NIGHT LIGHT
Richard Tyler, 1777 Tiffany Court, Camarillo, Calif. 93010
Filed Nov. 15, 1976, Ser. No. 741,945
Int. Cl.² F21V *33/00*
U.S. Cl. 362—226 6 Claims

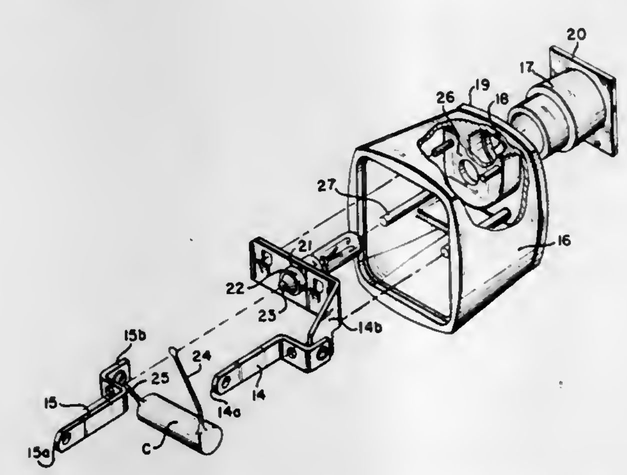

1. A night light for plugging directly into first and second blade receiving slots in an electrical wall outlet said night light comprising, in combination:

a. a first conducting blade having one end receivable in said first of said receiving slots and its other end terminating in an electrically conducting frame structure defining a bulb supporting opening;
b. a light bulb having an annular base terminal and an end terminal, said base terminal being received in and supported by said bulb supporting opening so that the base terminal is electrically connected to said frame structure and first blade;
c. a second conducting blade having one end receivable in said second of said receiving slots and its other end terminating in an electrical terminal;
d. a capacitor having first and second terminal leads permanently electrically connected respectively to said end terminal of said light bulb and said electrical terminal of said second blade; and
e. a housing of electrical insulating material incorporating interior supports for holding said first and second blades in fixed parallel relationship, and having a front opening through which said bulb extends such that said night light is wholly supported by the blades when received in said electrical wall outlet, said bulb having a filament of given resistance and voltage rating substantially less than the voltage at said electrical outlet to burn out in the event such capacitor should short-circuit so that said light bulb simultaneously functions as a night light and as a fuse.

4,064,427
SAFETY GUARD AND LIGHT FIXTURE ATTACHMENT FOR CEILING FANS
Ray W. Hansen, Cape Coral, and Walter P. Pouchert, Fort Myers, both of Fla., assignors to Hansen Mfg. Co. of Florida, Inc., Cape Coral, Fla., a part interest
Filed Aug. 12, 1975, Ser. No. 603,950
Int. Cl.² F21V *33/00*
U.S. Cl. 362—96 9 Claims

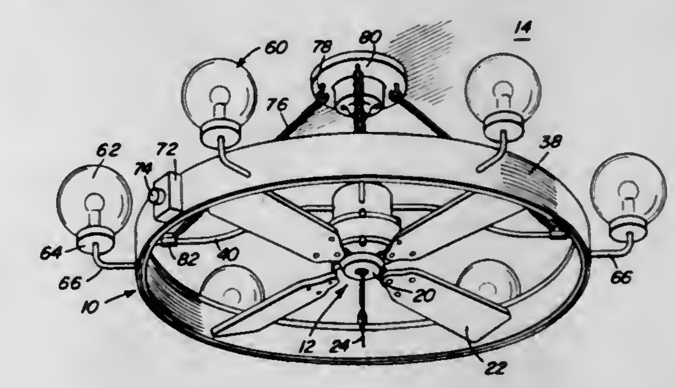

1. A safety guard and light fixture attachment for ceiling fans comprising an annular ring adapted to concentrically encircle a ceiling fan to prevent accidental contact with the tips of the blades of the fan, means supporting said ring in concentric aligned relation with the tips of the blades of the ceiling fan, and light fixture means supported on said ring for illuminating an area peripherally of the fan, said annular ring having a vertical height slightly greater than the pitch of the fan blades at the tips thereof, said supporting means including a plurality of rigid members extending radially inwardly from said ring, and a central adapter connected with the said radial members, said adapter including means adapted for supporting engagement with a ceiling fan support, said radial members being tubular for receiving electric wires for supplying electrical energy to the light fixture means, said annular ring including an annular raceway on the inner surface thereof in communication with the radial support members for receiving electrical wiring, said light fixture means including a plurality of light fixtures secured to the annular ring and including a tubular support member receiving electrical wiring from the raceway.

4,064,428
CHEMICAL LIGHT DEVICE
Richard Taylor Van Zandt, Bridgewater, N.J., assignor to American Cyanamid Company, Stamford, Conn.
Filed Nov. 1, 1976, Ser. No. 737,875
Int. Cl.² F21V *9/16*
U.S. Cl. 362—34 10 Claims

1. A chemiluminescent lighting device comprising a translucent container and contained therein:

a. several inactive components of an active chemiluminescent mixture,
b. barrier means separating said several components in several compartments within said container, said barrier means being breakable by impact with a striking means to combine said components,

c. striking means for breaking said barrier means by impact therewith,

d. a movable part that is movable within said container when said movable part is free and means restraining the free movement of said movable part within said container until the linear momentum of said movable part bearing against said restraining means exceeds a predetermined yield limit, whereupon said restraining means will yield and release said movable part for free movement,

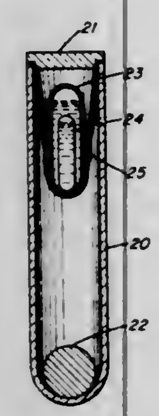

e. the said striking means, barrier means and movable part being located in relation to each other within said container so that when said movable part is released for free motion, within said tube said movable part will be impelled to bring together said barrier means and said striking means with impact sufficient to break said barrier means.

4,064,429

ILLUMINATED FLASHER CANE OF ROUND HOLLOW PLASTIC TUBING OR THE LIKE

Lawrence O. Boehm, 2002 Lowery, Poplar Bluff, Mo. 63901

Filed May 22, 1975, Ser. No. 563,108

Int. Cl.² F31V *33/00*

U.S. Cl. 362—102 3 Claims

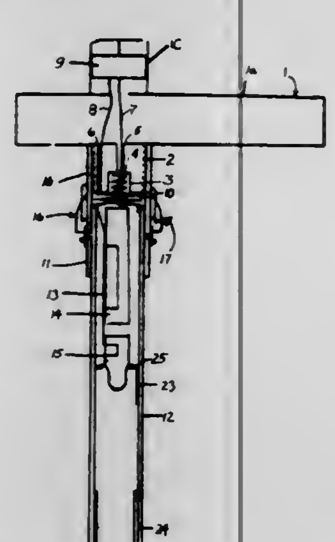

1. An illuminated walking cane comprising a handle having a grip means and first and second hollow arm means extending from said grip means at right angles thereto, a hollow shank, locking means adapted to detachably lock said handle to said shank, said handle further comprised of a cylindrical plug inserted within said first arm means, switch means mounted within said second arm means, said plug having a cylindrical recess aligned with the axis of said plug and adapted to receive first spring means; second spring means positioned within said first arm means on the same side of said plug as said first spring means, said shank having first and second ends and further comprised of an illumination module inserted into said first end, said illumination module having bracket means, a battery having first and second contacts supported by said bracket means, a lamp means supported by said bracket means and held in electrical contact with said first battery contact, annular flange means contacting said first end when said module is fully inserted into said shank, said first spring means engaging said second battery contact and said second spring means engaging said annular flange when said handle and shank are locked together by said locking means, electrical conductor means connecting said switch means to said first and second spring means, said flange and bracket means additionally forming part of the electrical circuit between said switch and lamp means.

4,064,430

MULTIPLE LIGHT DEVICE

Virgie M. Owens, 605 W. 3rd St., Sweetwater, Tex. 79556

Filed July 23, 1976, Ser. No. 708,223

Int. Cl.² H05B *33/02;* F21S *1/12;* F21P *1/02*

U.S. Cl. 362—231 7 Claims

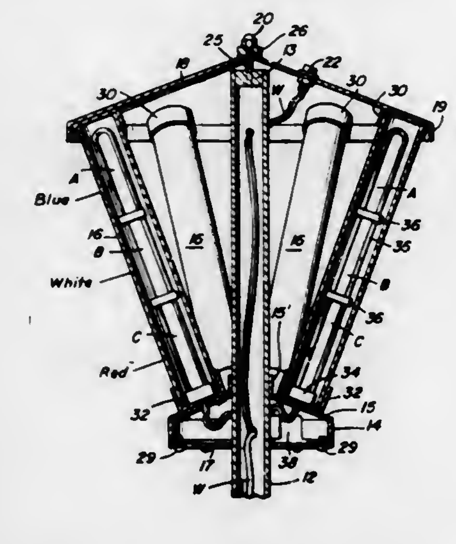

1. A multiple light device for displaying a shower of light effect comprising; a main support means, and light means on the main support means for emitting colored illumination in a repetitive and sequential manner in order to create the shower of light effect, the light means including a plurality of sets of light emitting devices of different colors mounted together in a single transparent protective tube structure, and the series of light devices being connected to associated electrical operating means for the purpose of creating the repetitive sequential operation thereof, with the light means for creating the repetitive sequential operation of the light emitting device including a plurality of flasher breakers, a like number of flasher breakers as bulbs, and each of the flasher breakers connected to a respective one of the bulbs for alternating the breakers and bulbs within an associated one the tubes.

4,064,431

LAST-FLASH INDICATOR FOR PHOTOFLASH ARRAY

Paul T. Coté, Cleveland Heights, Ohio, assignor to General Electric Company, Schenectady, N.Y.

Filed July 6, 1976, Ser. No. 702,663

Int. Cl.² G03B *15/02*

U.S. Cl. 362—4 10 Claims

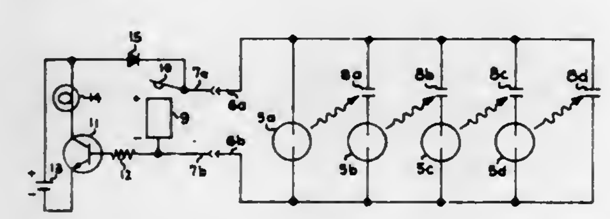

1. A multiple flash array comprising a group of flash lamps of which one of the lamps is to be flashed last, said array being provided with a pair of input signal connector terminals adapted to receive lamp-firing electrical signals for causing said lamps to flash, wherein the improvement comprises last-flash indicator switch means connected electrically between said pair of terminals and having an initial value of impedance and adapted to change to a different value of impedance in response to the flashing of said last-to-flash lamp thereby changing the impedance across said input signal connector terminals to indicate that said last-to-flash lamp has flashed.

4,064,432

TENON FOR MOUNTING A LIGHTING FIXTURE

Wayne W. Compton, Irvine, and Richard B. Shaner, Covina, both of Calif., assignors to Kim Lighting, Inc., City of Industry, Calif.

Filed June 11, 1976, Ser. No. 695,267

Int. Cl.² B25G *3/20;* F21S *1/10*

U.S. Cl. 362—457 20 Claims

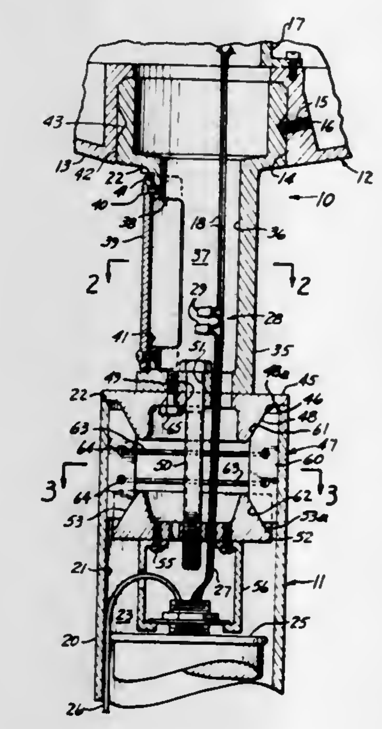

1. A lighting fixture tenon for structurally mounting a fixture to a support, the fixture including wires to be spliced to wiring from the support at a splice within the tenon, said tenon comprising: a structural body having a wall defining an internal cavity and having an aperture in said wall: a cover removably attachable to said wall to close said aperture; fixture mounting means for structurally mounting the lighting fixture to the body; and tenon mounting means for structurally mounting the body to the support comprising an adapter including a shoulder which is so proportioned and arranged as to engage an end surface on said support, an entry portion so proportioned and arranged as to enter said support, and engagement means to hold the adapter to the support, the tenon having openings adjacent to each of said means to admit wires to be spliced inside said cavity, said splice being accessible for inspection by removing the cover.

4,064,433

PRISMATIC LIGHTING PANEL

William W. Korn, Kirkwood, Mo., assignor to K-S-H, Inc., St. Louis, Mo.

Filed June 30, 1976, Ser. No. 701,229

Int. Cl.² F21V *5/00*

U.S. Cl. 362—330 10 Claims

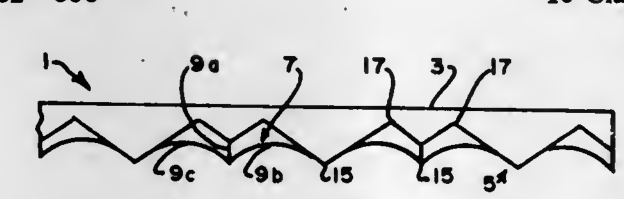

1. A prismatic lighting panel for use in a lighting fixture, said panel being made of light-transmitting material and having a substantially planar upper face and a prismatic lower face, said lower face defining a plurality of intersecting recessed cones having apex angles of about 116° ± 10°, the apexes of said cones being spaced from each other such that the intersections of adjacent cones form sides of generally equilateral triangular cells, said sides being arranged along lattice lines extending at about 60° to each other, the intersections of said lattice lines being the lowermost points of said lower face, said sides being from about 0.17 to about 0.25 inch long.

4,064,434

RETRO-REFLECTION COMMUNICATION SYSTEM

Armand Waksberg, Dollard-des-Ormeaux, Canada, assignor to RCA Limited, Quebec, Canada

Filed Sept. 7, 1976, Ser. No. 720,790

Claims priority, application Canada, June 7, 1976, 254169

Int. Cl.² H04N *7/18*

U.S. Cl. 250—199 19 Claims

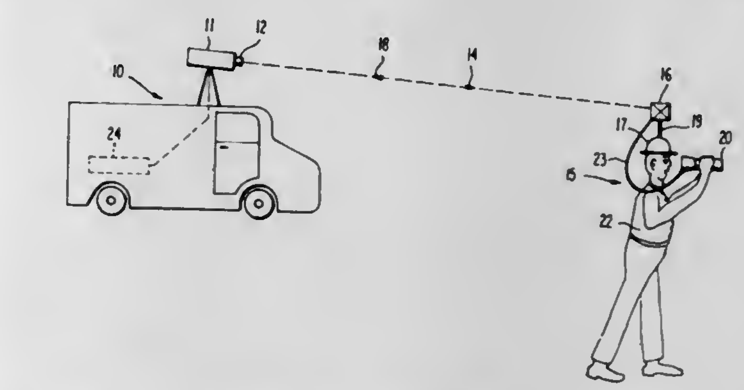

1. A communication system comprising:

a laser source having an optical system adapted to produce a laser beam along a path,

a transmitter station comprising a retrodirective reflector for receiving the laser beam from the said source and reflectively returning it along the same path, and, a modulating means for impressing a modulation unto said beam as it is being returned, said modulating means comprising a mechanically stable layer of an electro-optic material mounted on a surface of the said retro-directive reflector to receive and directly act on said beam, said material being adapted to modify its operating characteristics to modulate said beam in response to a modulating signal applied to said material,

a receiver station for receiving the returned laser beam impressed with the said modulation,

whereby the beam from said laser source is directed towards the retro-directive reflector, is modulated by the said electro-optic material according to the modulating signal applied to said material and returned through the same path by the said retro-directive reflector and received by said receiver station.

4,064,435

RADIAL OPTICAL ENCODER APPARATUS FOR SHAFT ANGLE MEASUREMENT

William J. Stebbins, West Severna Park, Md., assignor to The United States of America as represented by the Secretary of the Air Force, Washington, D.C.

Filed Oct. 29, 1976, Ser. No. 737,119

Int. Cl.² G01D *5/34*

U.S. Cl. 250—231 SE 8 Claims

1. A radial optical encoder apparatus for shaft angle measurement comprising in combination:

a shaft capable of rotation about its central axis, said shaft having a ring radially disposed thereon, said ring having a plurality of faceted surfaces disposed on it's outer surface parallel to said shaft central axis, said faceted surfaces being positioned in a predetermined pattern,

a first optical encoder means positioned substantially perpendicular to said shaft, said first optical encoder means detecting angular rotation in said shaft position, said first optical encoder means converts said angular rotation into a pair of electrical output signals, said pair of electrical output signals being representative of said shaft position,

a second optical encoder means positioned diametrically opposite said first optical encoder means, said second

optical encoder means cooperating with said ring to provide a pair of auxiliary signals, and,

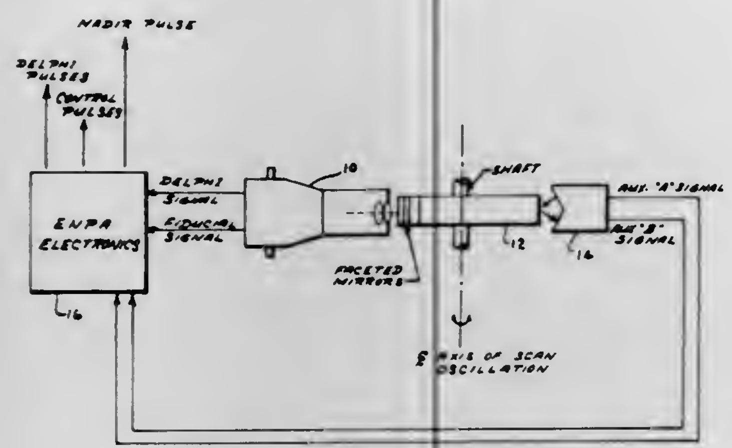

an electronic processing means receiving said pair of electrical output signals and said pair of auxiliary signals, said electronic processing means decoding both pairs of input signals to provide three output signals.

4,064,436

REDUCING NOISE IN URANIUM EXPLORATION

William J. Ward, III, Schenectady, N.Y., assignor to Terradex Corporation, Walnut Creek, Calif.

Filed Aug. 18, 1976, Ser. No. 715,224

Int. Cl.² G01V *5/00*

U.S. Cl. 250—253 **8 Claims**

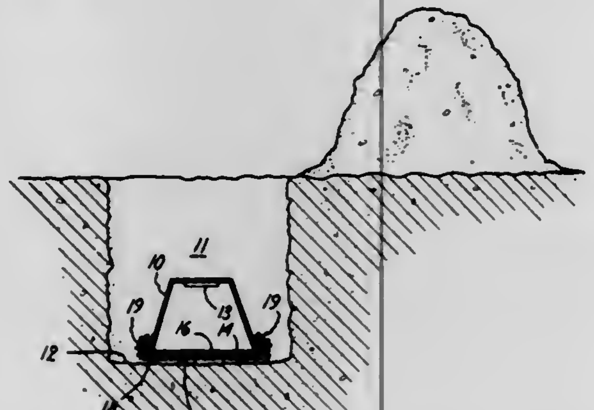

1. Radon detection apparatus for uraniumore prospecting comprising in combination:

an imperforated protective housing defining an enclosed volume and having an opening therein, said housing being adapted for burial in the earth with said opening disposed at the underside thereof,

a body of alpha particle detection material disposed within said housing and secured thereto for exposure to irradiation by alpha particles from soil gases entering said enclosed volume through said opening and

a non-porous permselective membrane so disposed between said body and the soil that soil gases leaving the soil and entering said housing must enter, traverse the thickness of and leave said membrane, said membrane being substantially free of content emitting either ^{220}Rn or ^{222}Rn.

4,064,437

METHOD FOR MEASURING THE DEGREE OF ALLOYING OF GALVANNEALED STEEL SHEETS

Yusuke Hirose, Ichikawa; Fumihiro Ida, Funabashi, and Takehiko Ito, Kamagaya, all of Japan, assignors to Nisshin Steel Co., Ltd., Tokyo, Japan

Filed Aug. 2, 1976, Ser. No. 710,862

Claims priority, application Japan, Aug. 12, 1975, 50-97141

Int. Cl.² G01N *23/20*

U.S. Cl. 250—273 **9 Claims**

1. The method for measuring the degree of alloying of galvannealed steel sheets comprising measuring at least one of the X-ray diffraction characteristics of the iron-zinc intermetallic compounds of said steel sheets, said X-ray diffraction characteristics including the X-ray diffraction intensity, the width of

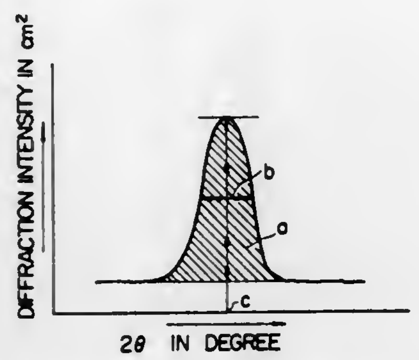

the diffraction profile and the peak angle of said diffraction profile, and estimating said degree of alloying on the basis of analysis of said measured X-ray diffraction characteristics.

4,064,438

NONDESTRUCTIVE DETECTION AND MEASUREMENT OF HYDROGEN EMBRITTLEMENT

Franklin Alex, Layton, and Joseph Gerald Byrne, Salt Lake City, both of Utah, assignors to The University of Utah, Salt Lake City, Utah

Filed Jan. 29, 1976, Ser. No. 653,335

Int. Cl.² G01N *23/00*

U.S. Cl. 250—308 **12 Claims**

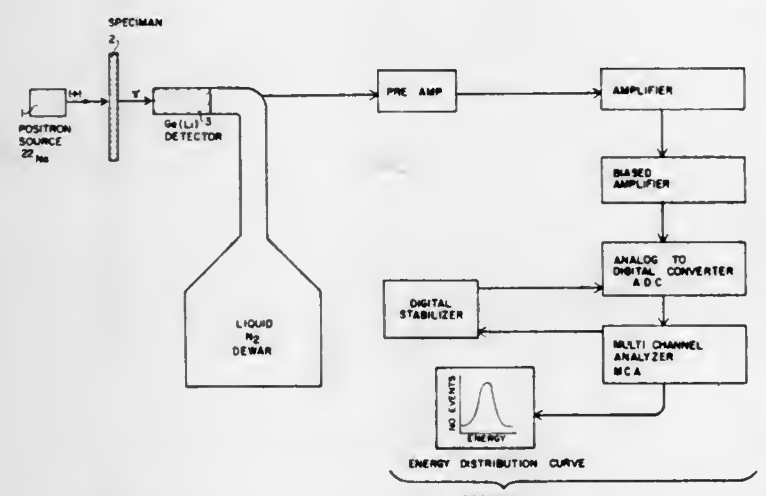

1. A method for the nondestructive determination of hydrogen embrittlement in metals, alloys, and other crystalline materials subject thereto, comprising the steps of:

a. exposing the subject material to positron radiation,

b. detecting the resultant positron-electron annihilation characteristics, and

c. recording the resultant data from numerous annihilation events in statistical format appropriate for evaluation of the electron activity within the subject material.

4,064,439

PHOTOCONTROLLED ION-FLOW ELECTRON RADIOGRAPHY

Kei-Hsiung Yang, Schenectady, N.Y., assignor to General Electric Company, Schenectady, N.Y.

Filed Aug. 20, 1976, Ser. No. 716,088

Int. Cl.² G03G *13/00*

U.S. Cl. 250—315 A **12 Claims**

1. A method for photocontrolled ion-flow electron radiography comprising the steps of:

a. providing a mesh screen having a layer of a photoconductive insulating material fabricated upon only one surface thereof;

b. depositing a quantity of electrical charge of a first polarity substantially uniformly adjacent the top surface of the entire photoconductive layer;

c. moving a plaque of a phosphor material into substantially abutting relationship against the charged photoconductive layer;

d. illuminating the phosphor plaque with x-rays differentially absorbed by an object to be analyzed, to cause said phosphor plaque to convert the X-rays to light photons for differentially modifying the conductivity of a plurality of portions of the charged photoconductive layer to create a charge image thereon of magnitude proportional to the absorption of said X-rays by said object;

e. removing said phosphor plaque;

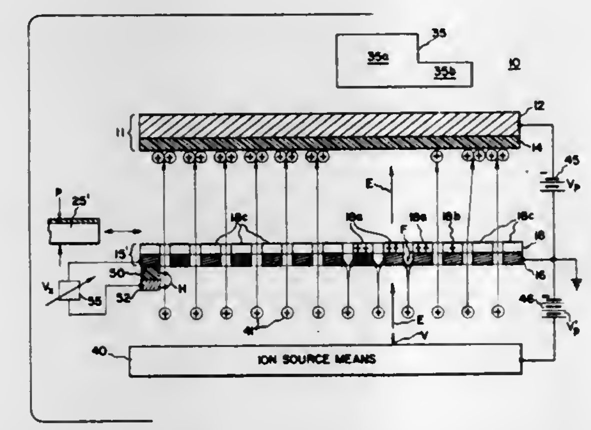

f. providing an insulating film spaced from and parallel to the layer of photoconductive material;

g. accelerating a stream of ions having said first polarity sequentially toward the surface of the screen devoid of the photoconductive layer and thence towards the insulating film, to provide a charge image upon the film modulated by the charge image in the photoconductive layer upon said screen and substantially inversely proportional thereto; and

h. developing the charge image on said film by xerographic techniques to provide a radiograph of said object.

4,064,440

X-RAY OR GAMMA-RAY EXAMINATION DEVICE FOR MOVING OBJECTS

Frederick L. Roder, 2425 Nottingham Drive, Falls Church, Va. 22043

Filed June 22, 1976, Ser. No. 698,660

Int. Cl.² G01N *23/02*

U.S. Cl. 250—359 **12 Claims**

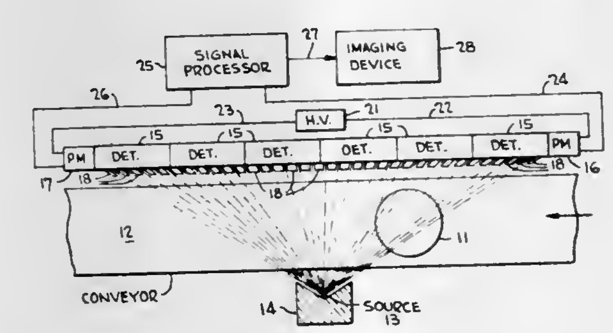

1. In combination,

means for transporting an object in a given direction at a known rate of travel along a selected rectilinear path having at least one substantially straight reference section;

an angularly divergent fan beam source of ionizing photons;

a plurality of photon detection means disposed in selected spaced relation and adapted to detect photons from said beam source;

said photon source and said photon detection means being disposed in the vicinity of said reference section such that an object transported by said means for transporting passes therebetween and photons of the angularly divergent beam of said photon source impinges upon said object, said angularly divergent beam photon source and said photon detection means having a fixed orientation with respect said reference section whereby the divergent beam of said photon source is aligned with the direction of travel of an object within said reference section and said detection means are spaced with respect said direction of travel;

a signal processing means,

means connecting said detection means to said processing means,

means for providing an output signal indicative of the mass distribution of said optically opaque object, and

means connecting said processing means to said means, for providing an output signal.

4,064,441

SCANNING DEVICE FOR SCINTIGRAPHY OF THE HUMAN BODY

Renato Casale, Rome, Italy, assignor to Ital Elettronica S.p.A., Italy

Filed Mar. 16, 1976, Ser. No. 667,314

Claims priority, application Italy, Apr. 17, 1975, 49160/75

Int. Cl.² G01T *1/20*

U.S. Cl. 250—363 S **10 Claims**

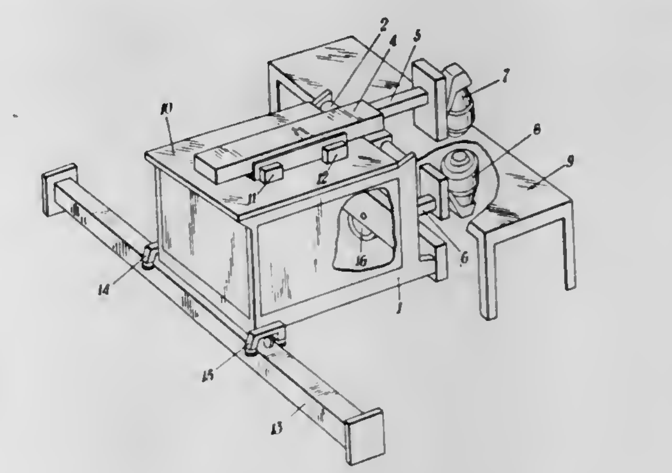

1. A scanner for scintigraphy of a body comprising:

a. an elongated rail member adapted to be positioned at a bed to extend longitudinally of the bed parallel to a side thereof;

b. a frame member movably supported on said rail member;

c. first guide means connected to said frame member and extending parallel to said rail member;

d. a carriage movably supported on said first guide means;

e. support means connected to said carriage for movement therewith and extending transverse to said rail member;

f. a rod member slidably mounted on said support means for movement transverse to said rail member;

g. a scintigraphic detector mounted on said rod member for movement therewith, said detector adapted for positioning over the bed;

h. a recording means coupled to said scintigraphic detector for recording scintigraphic images as detected by said detector; and

i. drive means for moving said frame member along said rail, for moving said carriage member along said first guide means, and for moving said rod member along said support means to move said detector longitudinally and transversely with respect to the bed.

4,064,442

ELECTRIC MOTOR HAVING PERMANENT MAGNETS AND RESONANT CIRCUIT

Carlos Subieta Garron, Takoma Park, Md., assignor to CSG Enterprises, Inc., New York, N.Y.

Filed Mar. 17, 1976, Ser. No. 667,501

Int. Cl.² H02K *37/00*

U.S. Cl. 318—254 **5 Claims**

1. An electric motor comprising at least one rotor assembly and at least one stator assembly; wherein each of said rotor

assembly and said stator assembly comprises a ferromagnetic core, a coil wrapped around said core and a permanent magnet positioned for having its flux path shunted through said core, when said coil is de-energized, such that the effective external magnetic flux is substantially zero, and for having its flux additive to that of the electromagnet formed by said core and said coil, when said coil is energized, to form magnetic poles

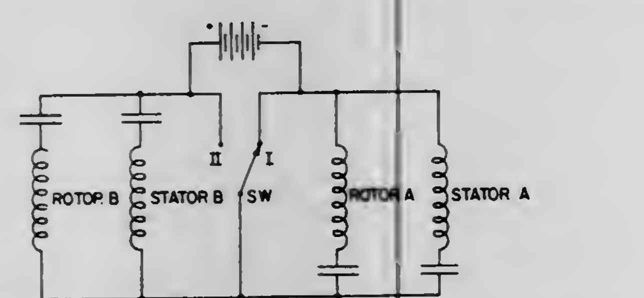

aligned with the poles of said permanent magnet, wherein the magnetic density of said external flux is substantially doubled as compared to the density which would result from a single one of said magnets; said motor including commutator switch means for alternately connecting each said coil to and disconnecting each said coil from an energization source; and each of said stator and rotor assemblies including a capacitor connected in series with each said coil.

4,064,443

CONTROL SYSTEM FOR D.C. MOTOR

Isao Yamada, Chigasaki, and Isamu Shibata, Musashino, both of Japan, assignors to Ricoh Co., Ltd., Japan

Filed Dec. 2, 1975, Ser. No. 636,996

Claims priority, application Japan, Dec. 13, 1974, 49-143604

Int. Cl.² H02P *5/00*

U.S. Cl. 318—331 **1 Claim**

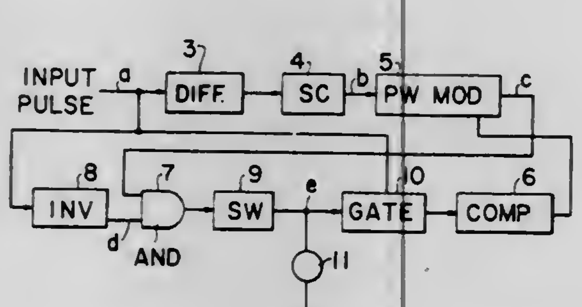

1. A control system, for a d.c. motor supplied by a pulse train, comprising, in combination, generating means generating a first pulse train; differentiating means differentiating said first pulse train to produce a trigger pulse train; means, responsive to each pulse of said trigger pulse train and to a respective control signal, producing respective pulses which, together, constitute a second pulse train for supply to the motor; a reference voltage source; means comparing the reference voltage and the counter e.m.f. of the motor, prior to feeding each pulse of said second pulse train into the motor, to produce said control signal, AND gate means having an output connected to the motor; a first input connected to said generating means, and a second input; and an inverter having an input connected to said producing means and an output connected to said second input of said AND gate means.

4,064,444

METHOD AND SELF-ADAPTING DAMPER SYSTEM HAVING ENERGY BALANCE

Don-Tri Hoang, Maurepas, France, assignor to Societe Francaise d'Equipments pour la Navigation Aerienne, Villacoublay, France

Filed Mar. 28, 1975, Ser. No. 563,201

Claims priority, application France, Mar. 29, 1974, 74.11493

Int. Cl.² G05B *13/00*

U.S. Cl. 318—561 **9 Claims**

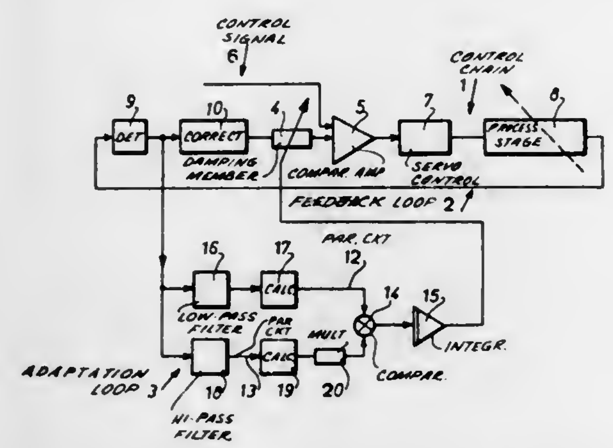

1. A method of regulating the process of a system by self-adaptive damping characterized by energy balance, said process comprising regulating the damping in different regimes in which the process evolves by producing a first signal indicative of a relation expressing the constancy of the sum of the logarithmic decrements of all of the modes of proper movement of the regulated system indicating that all augmentation of stability of one mode obtained by change of regulation is compensated by a loss of stability of one or a plurality of other of said modes and a second signal indicative of the relation of the energies of the modes with respect to the corresponding logarithmic decrements, and combining the signals to establish a connection between the relationships of energy and of stability and thereby of the energy of the different modes as a function of the gain of adjustment.

4,064,445

TRACER MECHANISM WITH AXIAL FORCE MEANS FOR ITS STYLUS AND SYSTEMS INCORPORATING THE SAME

Robert H. Wenzel, Orange, Calif., assignor to Textron, Inc., Providence, R.I.

Division of Ser. No. 455,018, March 26, 1974, Pat. No. 3,976,928. This application Nov. 25, 1975, Ser. No. 635,243

Int. Cl.² G05B *19/36*

U.S. Cl. 318—578 **9 Claims**

1. In a tracer mechanism which includes a body, a stylus having a generally vertical longitudinal axis, and mounting means mounting the stylus to the body for axial movement relative thereto, the improvement comprising: an axial force element comprising an electrically conductive winding

mounted to the body, and a stator fixed to the stylus, whereby energizing the winding by passing an electrical current there-

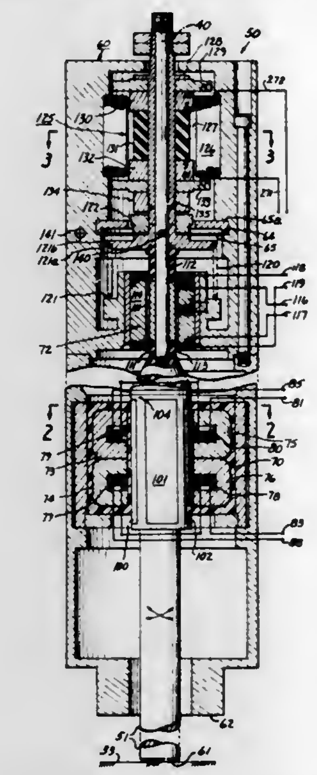

through creates a magnetic circuit with the stator which exerts an axial force on the stylus.

4,064,446

DUPLICATING METHOD AND ARRANGEMENT

Holger Krohn, Lohr-Wombach, Germany, assignor to Indramat-Gesellschaft fur Industrie-Rationalisierung und Automatisierung, Lohr am Main, Germany

Continuation of Ser. No. 433,980, Jan. 16, 1974, abandoned. This application Oct. 4, 1976, Ser. No. 729,145

Claims priority, application Germany, Jan. 18, 1973, 2302336

Int. Cl.² G05B *19/36*

U.S. Cl. 318—578 **9 Claims**

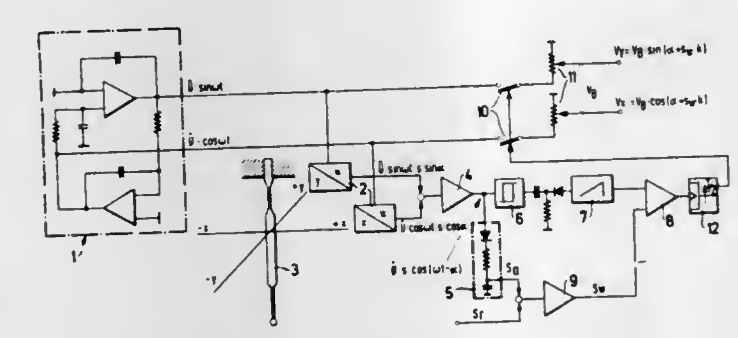

1. A method for guiding a stylus along a template in a plane having a first axis, and a second axis perpendicular to said first axis, comprising, in combination, creating relative motion between said template and said stylus along said first and second axis in response to a first and second desired velocity signal respectively in such a manner that the amplitude of deflection of said stylus remains constant; and creating said first and second desired velocity signals as components along said first and second axis respectively of a velocity vector having a predetermined constant amplitude and having a phase angle corresponding to the direction of deflection of said stylus and varying also as a function of said amplitude of deflection, whereby the velocity in the direction of motion of said template relative to said stylus remains constant; wherein said step of creating said first and second desired velocity signals comprises the steps of furnishing a first AC voltage having an amplitude corresponding to the amplitude of deflection of said stylus along said first axis and a second AC voltage having an amplitude corresponding to the amplitude of deflection of said stylus along said second axis, adding said first AC voltage to said second AC voltage thereby creating a third AC voltage having an amplitude corresponding to said amplitude of said deflection of said stylus and a phase angle corresponding to said direction of deflection of said stylus, furnishing a comparison signal varying as a predetermined function of time, synchronizing said furnishing of said comparison signal to said third AC voltage, furnishing an amplitude signal corresponding to the amplitude of said third AC voltage, continuously comparing said amplitude signal to said comparison signal and furnishing a switching signal when said comparison signal has an amplitude corresponding to said amplitude signal, furnishing a first and second control voltage having a relative phase shift of 90°, and sampling said first and second control voltage in response to said switching signal, the so-sampled instantaneous value of said first and second control voltage constituting, respectively, said first and second desired velocity signals.

4,064,447

CORDLESS PORTABLE ELECTRICALLY POWERED DEVICE

James Ensign Edgell, Senatobia, Miss.; Lynn David Lineback, and Richard Nelson Paul, both of Danville, Va., assignors to Disston, Inc., Pittsburgh, Pa.

Continuation-in-part of Ser. No. 607,376, Aug. 25, 1975. This application Aug. 16, 1976, Ser. No. 714,916

Int. Cl.² H02J *7/00;* **H01M** *45/00*

U.S. Cl. 320—2 **7 Claims**

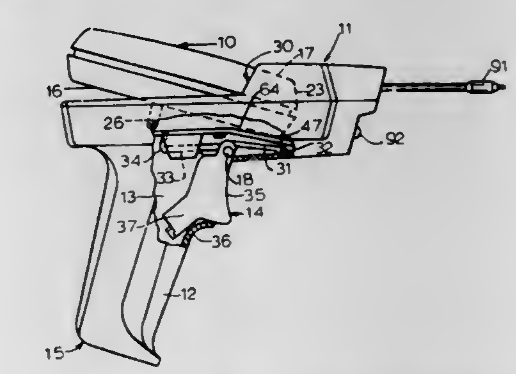

1. In a cordless portable electrically-powered tool, means defining a housing having a battery pack receiving recess, means defining the base of said recess comprising an elongated plate for receiving said pack during insertion in and removal from said recess, laterally spaced parallel linear openings at an intermediate portion adapted to receive a pair of contact prongs of the type adapted for insertion into a conventional household electrical outlet, and an aperture spaced from said openings, and said tool having manual switch means manually movable from an inoperative position to an operative position for projecting through said aperture to contact and actuate a switch located on a pack inserted in said recess.

4,064,448

BAND GAP VOLTAGE REGULATOR CIRCUIT INCLUDING A MERGED REFERENCE VOLTAGE SOURCE AND ERROR AMPLIFIER

Fred L. Eatock, San Jose, Calif., assignor to Fairchild Camera and Instrument Corporation, Mountain View, Calif.

Filed Nov. 22, 1976, Ser. No. 743,735

Int. Cl.² G05F *1/56*

U.S. Cl. 323—22 T **3 Claims**

1. In a band gap voltage regulator wherein an internal reference voltage source and error amplifier are merged the improved circuit which comprises:

a first resistor;

a second resistor;

a first transistor;

a second transistor, the base of said second transistor being electrically connected to the collector of said first transistor and to the base of said first transistor, the emitter of said second transistor being electrically connected to the emitter of said first transistor through said first resistor;

a third transistor whose emitter is electrically connected to the collector of said second transistor; and

a forth transistor whose emitter is electrically connected to the base of said third transistor and whose emitter is elec-

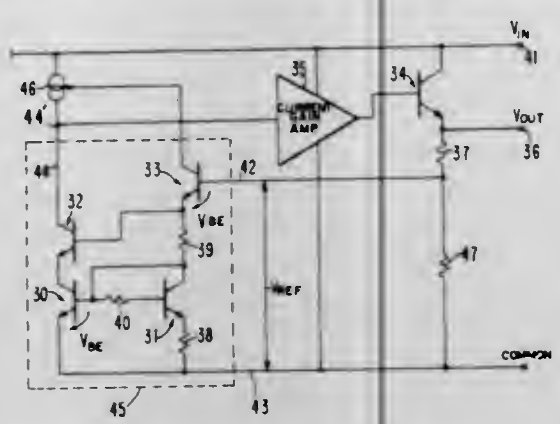

trically connected through said second resistor to the collector of said first transistor.

4,064,449
DIRECT CURRENT COMPENSATION CIRCUIT FOR TRANSFORMERS
Max S. Macrander, Warrenville, Ill., assignor to GTE Automatic Electric Laboratories Incorporated, Northlake, Ill.
Filed Aug. 13, 1976, Ser. No. 714,437
Int. Cl.² G05F *1/56;* H01F *19/02*
U.S. Cl. 323—48 **5 Claims**

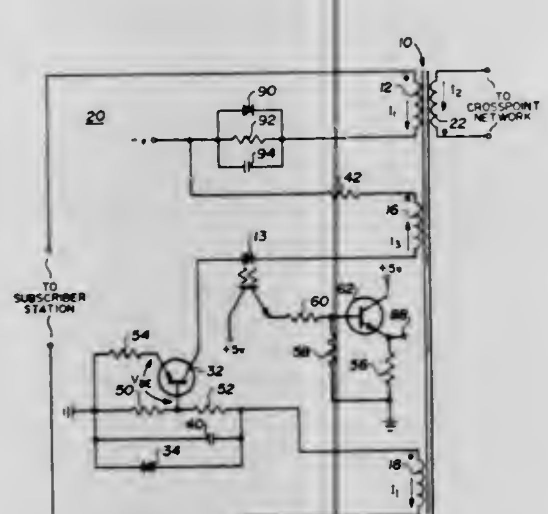

1. A direct current compensation circuit for a transformer having a plurality of windings including a first winding connected in a first electrical loop having a bias current flowing therethrough, a second winding connected to a potential source in a second electrical loop and a compensation winding, said circuit comprising:
first resistance means including first and second serially connected resistors connected in series with said second electrical loop;
second resistance means connected to said potential source;
transistor means having first, second and third terminals, said first terminal connected between said first and second serially connected resistors and said second terminal connected to said second resistance means,
said transistor means being in a first conductive state when the magnitude of direct current flowing through said first resistance means is less than a predetermined magnitude and in a second conductive state when the magnitude of direct current flowing through said first resistance means is greater than the predetermined magnitude;
first circuit means for connecting said third terminal to said compensation winding.

4,064,450
ENGINE SCOPE TESTER CALIBRATOR
Michael John Morales, Whittier, and George I. Reeves, Fullerton, both of Calif., assignors to Beckman Instruments, Inc., Fullerton, Calif.
Filed Aug. 16, 1976, Ser. No. 707,903
Int. Cl.² F02P *17/00*
U.S. Cl. 324—15 **18 Claims**

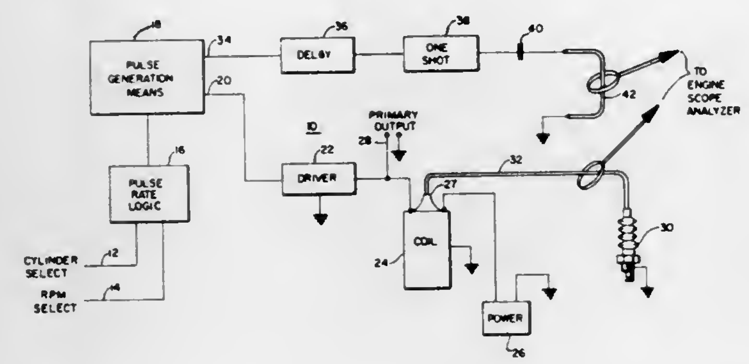

1. An engine simulator comprising:
a. first solid-state pulse generating means for producing a series of first pulses corresponding to the firing commands to the spark plugs of an engine having a selected number of cylinders and revolving at a selected speed;
b. means connected to said first pulse generating means for producing a first high voltage pulse in response to each of said first pulses and having means to which apparatus using the engine simulator may be connected to sense said first high voltage pulses;
c. second solid-state pulse generating means connected to said first pulse generating means for producing a series of second pulses in synchronizaton with said first pulses and corresponding to the firing commands to an individual spark plug of the engine; and,
d. means connected to said second pulse generating means for producing a second high voltage pulse in response to each of said second pulses and having means to which apparatus using the engine simulator may be connected to sense said second high voltage pulses.

4,064,451
HYSTERESIS COMPENSATED REED SWITCH ASSEMBLY FOR A POSITION INDICATING SYSTEM
Milton Kearney Foxworthy, Lancaster, Ohio, assignor to Diamond Power Specialty Corporation, Lancaster, Ohio
Filed May 5, 1976, Ser. No. 683,454
Int. Cl.² G01R *33/12*
U.S. Cl. 324—207 **5 Claims**

1. A position indicating system for determining the position of a movable member inside a sealed container comprising:
a magnetic flux producing member mounted to the movable member to be movable therewith;
a series of reed switches spacedly mounted externally of the sealed container along the length of the sealed container to be individually actuated by the flux producing member as the movable member moves within the sealed container to indicate the position of the movable member thereby; and
means affixed to each of said series of reed switches for producing a continuous alternating magnetic flux field in the area of each of said reed switches to minimize hysteresis between the actuated and unactuated reed switch position including a coil wrapped around each reed switch to

conduct alternating electric current therethrough and a source of alternating electric current continuously con-

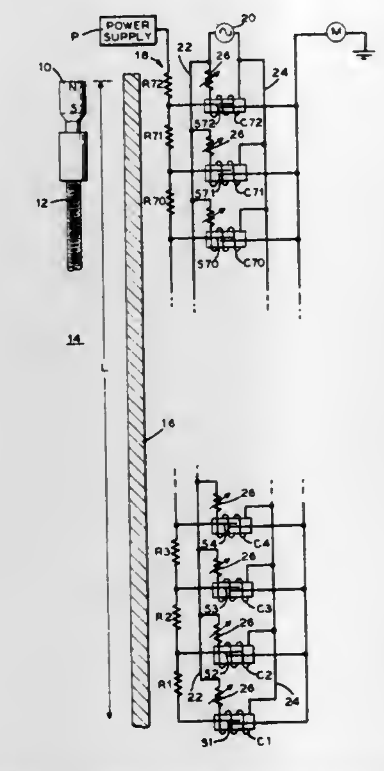

nected to each of said coils independently of the position of said movable member.

4,064,452
EDDY CURRENT DEFECT SIMULATOR AND METHOD
James Michael Toth, Lyndhurst, Ohio, assignor to Republic Steel Corporation, Cleveland, Ohio
Filed Mar. 14, 1975, Ser. No. 558,265
Int. Cl.² G01R *33/12*
U.S. Cl. 324—202 **24 Claims**

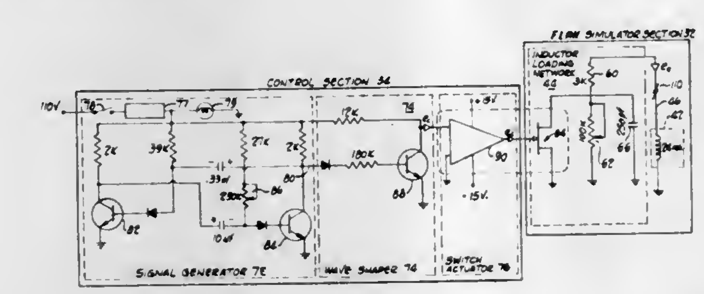

1. A workpiece flaw simulator for facilitating calibration of an eddy current inspection system having a probe operable to produce varying electromagnetic fields for inducing eddy currents in a ferrous workpiece in said fields and which responds to changes in impedance loading of the probe caused by the presence of the ferrous workpiece in the fields, the flaw simulator comprising: first passive non-balanceable circuit means inductively couplable to said probe for loading said probe to a first degree independently of a coupling to the first circuit means and the probe of workpiece material, and second circuitry connected to said first circuit means for altering the effective impedance of said first circuit means as seen by said probe to vary the loading of the probe to simulate the introduction into the field of a ferrous workpiece having a defect of predetermined severity.

4,064,453
MAGNETIC FIELD DETECTOR
Werner E. L. Haas, Webster, and Gary A. Dir, Fairport, both of N.Y., assignors to Xerox Corporation, Stamford, Conn.
Filed July 2, 1976, Ser. No. 702,361
Int. Cl.² G01R *33/02*
U.S. Cl. 324—214 **10 Claims**

1. A magnetic field detector, comprising between two magnetic field permeable substrates a layer of composition comprising ferrofluid and metal flakes said metal flakes being suspended in said ferrofluid and magnetically detached from magnetic particles in said ferrofluid yet capable of being

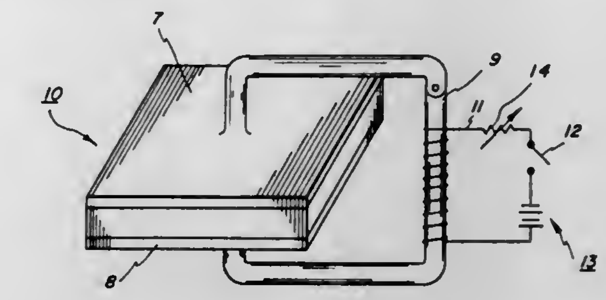

aligned in the direction of a magnetic field to which the ferrofluid is subjected, one of said substrates being transparent.

4,064,454
CORONA DISCHARGE DETECTING DEVICE
Hironori Yoshino, Takarazuka, and Kohei Sato, Kawanishi, both of Japan, assignors to Matsushita Electric Industrial Co., Ltd., Kadoma, Japan
Continuation of Ser. No. 441,832, Feb. 12, 1974, abandoned. This application Jan. 14, 1976, Ser. No. 649,198
Claims priority, application Japan, Feb. 14, 1973, 48-18806; Feb. 14, 1973, 48-18807; Feb. 15, 1973, 48-18934; Feb. 19, 1973, 48-19981; Feb. 19, 1973, 48-19982
Int. Cl.² G01R *31/12*
U.S. Cl. 324—54 **1 Claim**

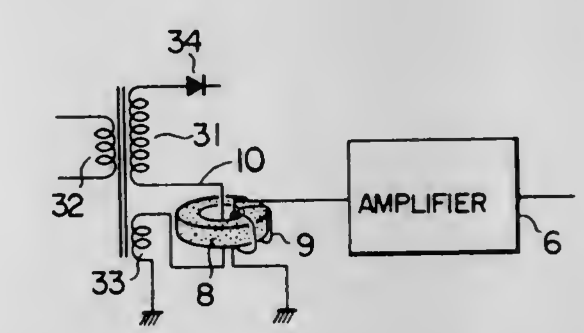

1. A corona discharge detecting device comprising:
a horizontal deflection pulse generating circuit;
a high voltage output circuit coupled to said pulse generating circuit for generating output pulses having frequency components in the same frequency range as said corona discharge;
a flyback transformer including a primary coil coupled to said high voltage output circuit, a high voltage coil and a third coil;
a tuned coupling circuit tuned to a frequency between 4.2 MHz and 50 MHz, said tuned coupling circuit including a magnetic core having an opening therein, a conductor connecting the high voltage and third coils of said flyback transformer passing through said opening, and a detecting coil wound on said core;
a tuned amplifier coupled to the detecting coil of said flyback transformer, said tuned amplifier being tuned to the same frequency as said coupling circuit; and
an oscilloscope having its input connected to the output of said tuned amplifier, corona pulses occurring in said flyback transformer being displayed on said oscilloscope as unsynchronized pulses.

4,064,455
FLUID CONDITION MONITORING SYSTEM
Evan Lloyd Hopkins, and Jerry Leslie Wedel, both of Emporia, Kans., assignors to Hopkins Manufacturing Corporation, Emporia, Kans.
Filed Nov. 18, 1976, Ser. No. 742,781
Int. Cl.² G01R *27/26*
U.S. Cl. 324—61 R **14 Claims**

1. A system for monitoring the condition of a plurality of fluids as determined from measured electrical characteristics

of samples of said fluids successively applied to a sensor, comprising:

a remote test terminal having a remote controller and associated remote memory, a data entry means, and a test module, said test module including said sensor and a coupled electrical circuit means to remotely generate a test signal representative of said electrical characteristic of said samples.

wherein said remote controller includes means responsive to a user operation at said data entry means to generate and store associated sample identification and use signals in said remote memory for each sample applied to said sensor, said sample identification signal being representa-

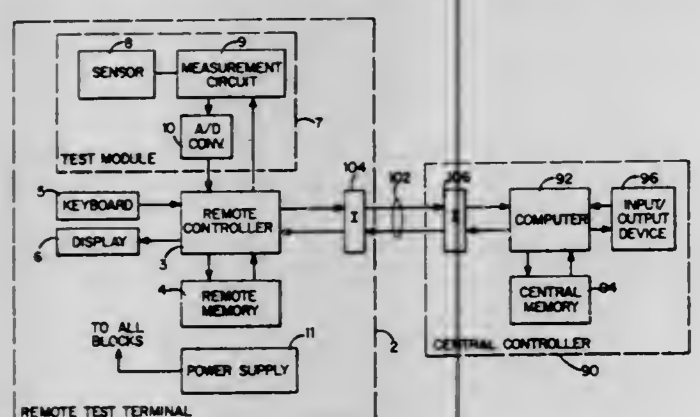

tive of the identity of the fluid for said sample under test, and said associated use signal being representative of the period of use of said sample, and

wherein said remote controller further includes means responsive to said user operation to control said test module to generate said test signal for said sample, and means to store said test signal in said remote memory in association with said stored sample identification and use signals, and

a test signal monitoring means for automatically identifying fluids for which said test signals indicate a predetermined condition, thereby providing evaluation of said remotely generated test signals representative of the condition of said fluids.

4,064,456
METER BOX ASSEMBLY
Clark Richard Grove, Boron, Calif., assignor to The United States of America as represented by the Secretary of the Air Force, Washington, D.C.
Filed Apr. 9, 1976, Ser. No. 675,434
Int. Cl.² G01R ***15/08;*** **G01B** ***7/16***
U.S. Cl. 324—115 **7 Claims**

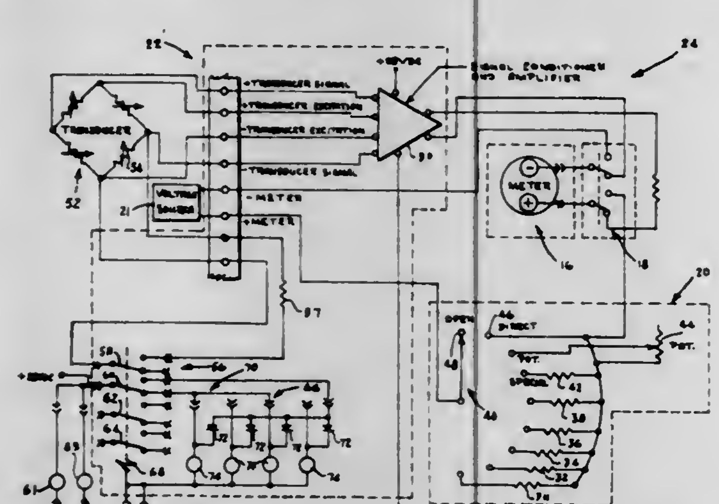

1. A meter box assembly capable of displaying the remote voltage from an external voltage source or the voltage output from an external strain gage transducer, said meter box assembly comprising a housing, said housing having at least one display unit therein, said display unit being in the form of means for displaying said remote voltage or said voltage output from said strain gage transducer, a switching means electrically connected to said display means, a voltmeter circuit, said voltmeter circuit being electrically connected between said external voltage source and said switching means, a strain gage circuit, said strain gage circuit being independent of said voltmeter circuit and electrically connected between said external strain gage transducer and said switching means, said strain gage circuit having a strain gage conditioning module, a switch module, a calibration resistor and an indicator lamp circuit, said external strain gage transducer being electrically connected between said conditioning module, said calibration resistor, said switch module and said indicator lamp circuit, whereby in accordance with the position of said switching means, said display means registers either said remote voltage from said external voltage source or said voltage output from said external strain gage transducer.

4,064,457
COMPACT MOVING COIL METER
Willem J. L. Boreas, Sayreville, N.J., assignor to Sangamo Weston, Inc., Springfield, Ill.
Filed Sept. 13, 1976, Ser. No. 722,607
Int. Cl.² G01R ***5/08***
U.S. Cl. 324—150 **18 Claims**

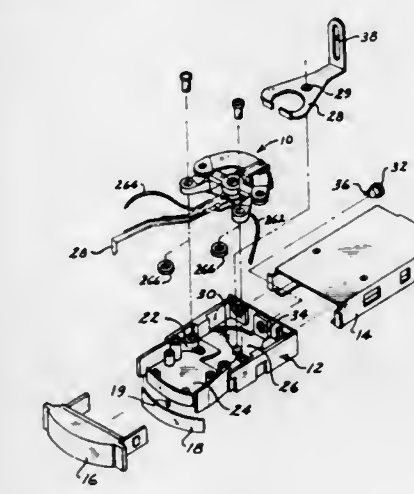

1. A meter comprising, meter
a support,
a rotor,
means mounting the rotor on the support for pivotal movement about an axis,
magnet mounting legs projecting from the support in a direction away from said axis,
a magnet,
a magnet support supporting said magnet,
a magnetically permeable plate in spaced relation to the magnet,
magnet locating means on each mounting leg,
plate locating means on each mounting leg,
said magnet engaging said magnet locating means on each mounting leg,
said plate engaging the plate locating means on each mounting leg,
means for securing said plate and magnet support on the mounting legs to clamp the magnet against the magnet locating means,
said rotor including a coil assembly having a leg of its winding extending through the space between the plate and magnet.

4,064,458
ELECTROMAGNETIC WAVE COMMUNICATION SYSTEMS
Bernard Collins De Loach, Jr., Murray Hill, N.J., assignor to S. Sherman, New Providence, N.J., a part interest
Continuation-in-part of Ser. No. 254,445, May 18, 1972. This application Nov. 29, 1973, Ser. No. 420,166
Int. Cl.² H04B ***7/24;*** **G01S** ***9/02***
U.S. Cl. 325—54 **1 Claim**

1. A cable television system, including;
a plurality of signal sources located within the atmosphere for radiating electromagnetic wave energy into the atmosphere solely within the band of frequencies between 55 and 63 gigahertz;
and a multiplicity of groups of signal receivers located

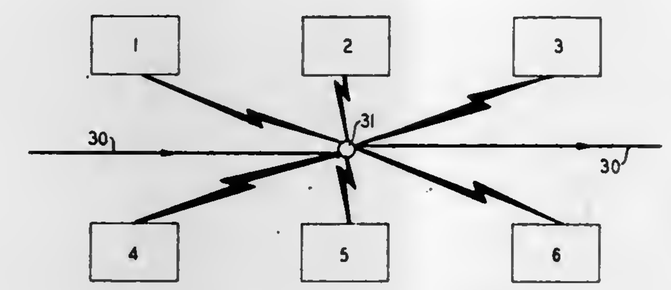

within the atmosphere for receiving said radiated wave energy, where a different group of said receivers is associated with a different one of said plurality of signal sources.

4,064,459
METHOD OF AUTOMATICALLY TESTING THE SERVICEABILITY OF A DATA TRANSMISSION SYSTEM
Wernhard Markwitz, and Volker Dümichen, both of Munich, Germany, assignors to Siemens Aktiengesellschaft, Munich, Germany
Filed July 9, 1976, Ser. No. 703,920
Claims priority, application Germany, July 9, 1975, 2530633
Int. Cl.² H04B ***17/00***
U.S. Cl. 325—67 **8 Claims**

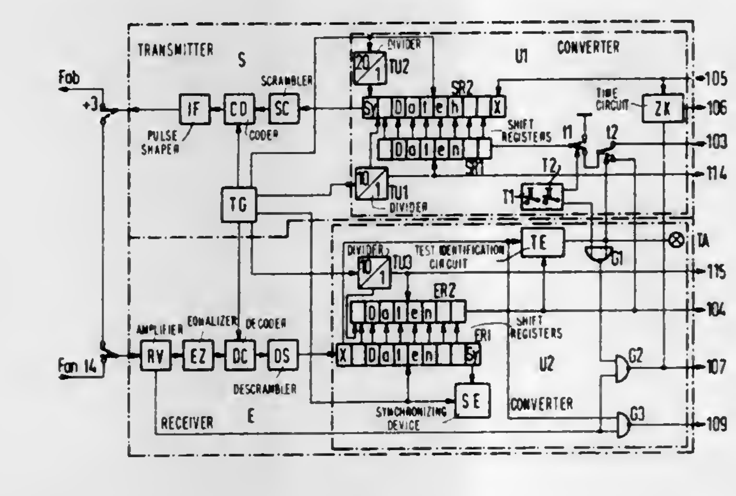

1. A method of automatically testing the transmission quality of a data transmission system, comprising the steps of:
transmitting from a testing station during actuation of a first key a bit group containing data bits having a given marking polarity and at least one additional bit corresponding to a spacing condition,
receiving said bit group in a receiving station,
analyzing said received bit group for transmission disturbances,
producing a visual indication is said receiving station in the event of mulitple undisturbed reception of said bit group,
connecting, in the event of multiple undisturbed reception of said bit group, a receiver in said receiving station to a transmitter therein and retransmitting said bit group to said testing station,
analyzing said retransmitted bit group for transmission disturbances,
producing a visual indication in said testing station in the event of multiple undisturbed reception of said retransmitted bit group and
blocking data input and output circuits in said testing and receiving stations during performance of the foregoing testing method.

4,064,460
COAXIAL WIRED BROADCASTING SYSTEM WITH TONE RESPONSIVE PROGRAM SELECTORS
Eric John West Gargini, Drayton, England, assignor to Communications Patents Limited, Kingston-upon-Thames, Great Britain
Continuation-in-part of Ser. No. 557,911, March 13, 1975, abandoned. This application Aug. 4, 1976, Ser. No. 711,463
Claims priority, application United Kingdom, Mar. 16, 1974, 11791/74
Int. Cl.² H04B ***3/10***
U.S. Cl. 325—308 **5 Claims**

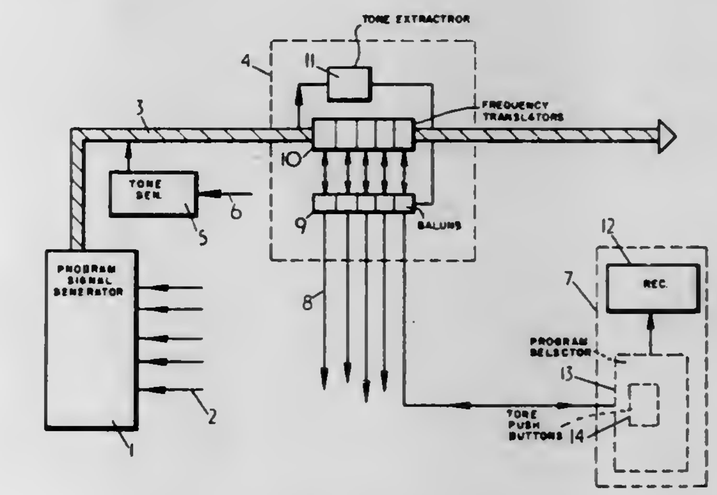

1. A wired broadcasting system comprising a wideband coaxial cable for carrying multi-channel programme signals from at least one programme source to a plurality of exchangers to each of which plurality of subscriber units for receiving a particular frequency band are connected, the said at least one programme source being constructed to supply the signals to the cable in different frequency channels, and each exchange comprising for each subscriber a switchable frequency translator for selectively translating any one of the said frequency bands to a predetermined other frequency band receivable by the subscriber unit, switching means controllable from the respective subscriber unit to selectively switch the frequency translator, and an output circuit constructed to supply the said predetermined other frequency signal to a feeder cable to which the subscriber is connected, a selector unit at each subscriber unit for generating control tones, wherein said switching means located at the exchange is responsive to said tones, a tone generator unit constructed to provide at least one master pilot tone to the said wide band coaxial cable, and a tone extractor unit at each exchange constructed to extract the said at least one master pilot tone from the said wideband coaxial cable for application to each subscriber unit connected to the exchange, the selector unit comprising tone generators responsive to the said at least one master pilot tone.

4,064,461
RECEIVER INCLUDING A STATION FINDING CIRCUIT
Gustavus Lambertus Petrus van Eijck, Eindhoven, Netherlands, assignor to U.S. Philips Corporation, Briarcliff Manor, N.Y.
Filed Nov. 5, 1975, Ser. No. 628,909
Claims priority, application Netherlands, Jan. 14, 1975, 7500396
Int. Cl.² H04B ***1/32***
U.S. Cl. 325—470 **4 Claims**

1. A station finding circuit comprising a pulse generator having an output, a tuning information storage circuit including a counter having a counting signal input coupled to said generator output, a converting circuit coupled to an output circuit of the counter for converting tuning information present in the counter into wave-range information which can be derived from an output circuit of the converting circuit, a comparison circuit having inputs coupled to the output circuit of the converting circuit and an output, an operating circuit

coupled to said comparison circuit, said operating circuit including a finding command switch for each wave-range, a finding speed change-over switch means coupled to said comparison circuit output for changing the frequency of the pulse

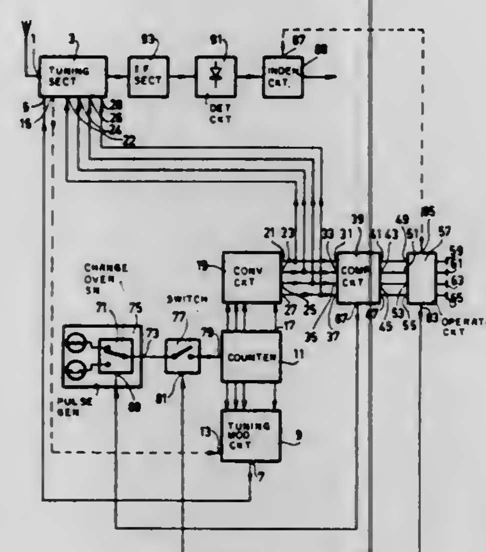

generator output so that counter positions not corresponding to a selected wave-range are run through at a fast rate during a finding action and counter positions corresponding to the selected wave-range can be run through at a comparatively slow rate.

4,064,462

ACOUSTIC FEEDBACK PEAK ELIMINATION UNIT

Rolf J. Goehler, Schaumburg, and Charles W. King, Saint Charles, both of Ill., assignors to Dukane Corporation, St. Charles, Ill.

Filed Dec. 29, 1976, Ser. No. 755,518

Int. Cl.² H03F *1/34*

U.S. Cl. 330—2 **6 Claims**

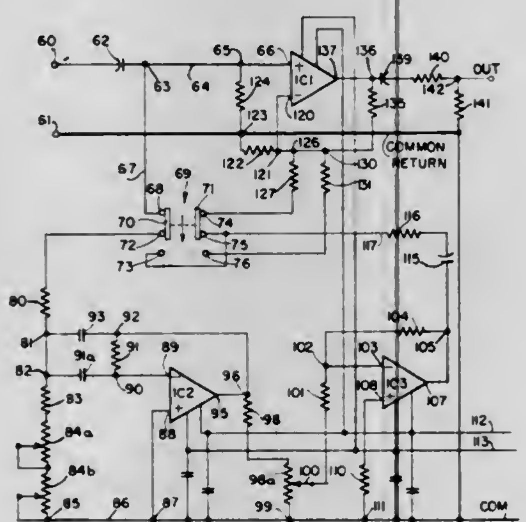

1. A system for cancelling an acoustic feedback frequency component from a broad-band audio frequency composite signal produced by an audio source, said system comprising active phase-inverting filter means having an input and an output and having a narrow passband including the acoustic feedback frequency, said filter means including tuning means for varying the center frequency of the passband over a range of frequencies, phase reversing means having an input coupled to the output of said filter means and an output, differential summing means having an inverting input coupled to the output of said phase reversing means and a non-inverting input for connection to the associated audio source to receive the composite signal and an output, and switching means connected to the input of said filter means and to the output of said phase reversing means and adapted to be connected to the associated audio source, said switching means having normal and feedback conditions for connecting the input of said filter means respectively to the associated audio source and to the output of said phase reversing means, said phase reversing means producing at the output thereof a feedback signal in phase with the composite signal at the input of said filter means when said switching means is in the normal condition thereof, said summing means being responsive to said feedback signal and the composite signal for subtracting one from the other thereby to cancel the acoustic feedback frequency component of the composite signal, and said switching means in the feedback condition thereof effecting oscillation of said filter means and said phase reversing means to produce an oscillation signal having a frequency determined by the tuning of said filter means, said summing means being responsive to said oscillation signal and the acoustic feedback frequency component of the composite signal to produce a beat frequency therebetween, said beat frequency being zero when said filter means is tuned to the acoustic feedback frequency, whereby said system may be accurately tuned for cancellation of any acoustic feedback frequency component.

4,064,463

AMPLIFIER CIRCUIT

Arthur John Leidich, Flemington, N.J., assignor to RCA Corporation, New York, N.Y.

Filed Sept. 24, 1976, Ser. No. 726,217

Int. Cl.² H03F *3/45*

U.S. Cl. 330—257 **9 Claims**

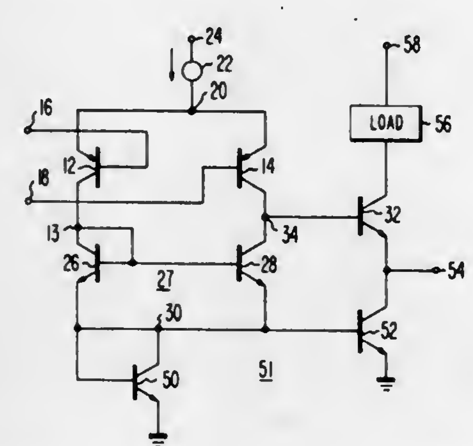

1. In combination with a first current mirror amplifier including first and second transistors of a first conductivity type each with base and emitter and collector electrodes, an input terminal to which the collector and base electrodes of said first transistor and the base electrode of said second transistor connect, a common terminal to which the emitter electrodes of said first and second transistors connect, and an output terminal to which the collector electrode of said second transistor connects, said first and second transistors exhibiting respective transconductances in 1:G ratio where G is a positive number, each of said first and second transistors having a current gain of $(\beta+1)$ between its base and emitter electrodes;

means for compensating for the base currents of said first and second transistors flowing through the input terminal of said first current mirror amplifier and not through its output terminal causing the current gain of said first current mirror amplifier to depart from a value of $-G$, which means comprises:

an auxiliary current amplifier having a current gain of $-H/(\beta+1)$, where H is a positive β-independent constant, connected between the common and output terminals of said first current mirror amplifier.

4,064,464

AMPLITUDE STABILIZED POWER AMPLIFIER

Alfred W. Morse, Baltimore, Md., assignor to Westinghouse Electric Corporation, Pittsburgh, Pa.

Filed Apr. 13, 1976, Ser. No. 676,450

Int. Cl.² H03F *3/60, 3/68*

U.S. Cl. 330—53 **8 Claims**

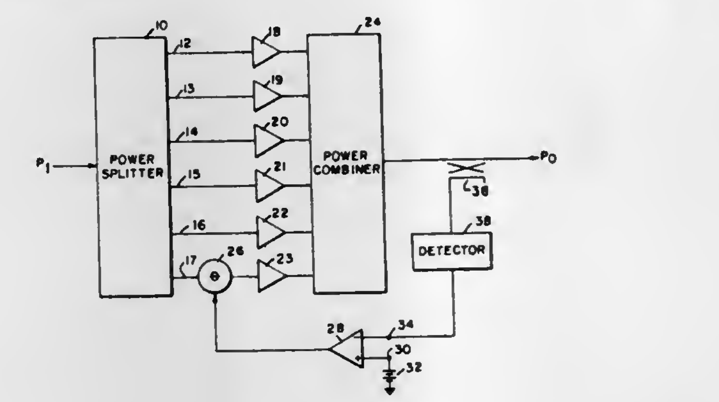

1. An amplitude stabilized power amplifier comprising:

a power splitter for splitting the power of an input signal into a predetermined number of channels;

a phase shifter that is responsive to the power signal of one of said channels for controlling the phase angle characteristic of the power signal of said one channel;

a plurality of amplifiers for amplifying the power signal of each of the channels of the power splitter;

a power combiner for combining the amplified signals of the channels to provide a power amplified output signal;

means to generate a first signal representative of the power level of the amplified output signal of the power combiner;

means to generate a second signal representative of a predetermined power level independent of the input; and

means governed by the first and second signals for continuously controlling the power signal phase shift provided by said phase shifter by shifting the phase angle characteristic of the power signal of said one channel with respect to the phase angle characteristic of the power signal of another channel with a magnitude in proportion to the difference between the first and second signals such that the power level of the power amplified output signal remains substantially constant.

4,064,465

LASER CAVITIES WITH GAS FLOW THROUGH THE ELECTRODES

Richard L. Hundstad, Pittsburgh, Pa., and Owen Farish, Bearsden, Scotland, assignors to Westinghouse Electric Corporation, Pittsburgh, Pa.

Continuation of Ser. No. 365,389, May 30, 1973, abandoned. This application Jan. 13, 1976, Ser. No. 648,688

Int. Cl.² H01S *3/097*

U.S. Cl. 331—94.5 PE **8 Claims**

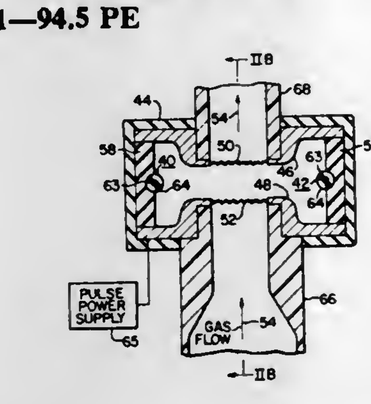

1. A high pressure pulsed gas laser apparatus having an optical cavity and an envelope volume substantially enclosing the optical cavity, comprising:

an electrode assembly positioned within said envelope volume including first and second electrodes arranged in a substantially uniform field configuration and defining a discharge gap region therebetween,

means for flowing a laser gas at high pressure through a first portion of said envelope volume including said discharge gap region in a direction orthogonal to the optical axis of said optical cavity,

said electrode assembly further including discharge initiation means adjacent said first and second electrodes in a second portion of said envelope volume for supplying initiatory electrons into said discharge gap region by means of photoemission and bulk gas ionization processes,

said electrode assembly being so arranged and constructed that said gas flow is substantially laminar to sustain a uniform an homogeneous discharge in said discharge gap region, and

pulsing means operatively connected to said electrode assembly to supply energy to said discharge volume for sustaining a glow discharge and to control said discharge initiation means for supplying electrons to said discharge gap region.

4,064,466

LINEARLY POLARIZING INTERNAL MIRROR TYPE GAS LASER TUBE

Fumio Seki; Taizo Oikado, and Keiichi Shintaku, all of Tokyo, Japan, assignors to Nippon Electric Company, Ltd., Tokyo, Japan

Filed Oct. 19, 1976, Ser. No. 733,777

Claims priority, application Japan, Oct. 23, 1975, 50-127675

Int. Cl.² H01S *3/00*

U.S. Cl. 331—94.5 D **8 Claims**

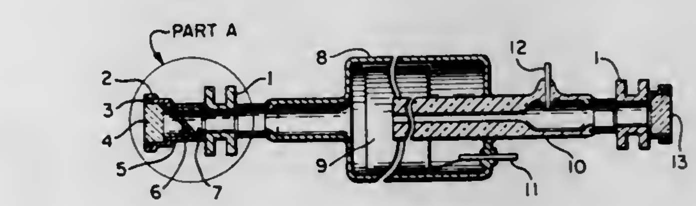

1. A linearly polarizing internal mirror type gas laser tube comprising a hollow metal supporting body installed at an end of the gas laser tube; a seal casing secured axially to said hollow metal supporting body; a first hollow cylindrical internal holding body with one end cut to a Brewster angle; an optical flat plate installed in close contact with the end thereof cut to a Brewster angle; and a second hollow cylindrical internal holding body with one end cut to a Brewster angle installed in close contact with said optical flat plate; said seal casing accommodating said first hollow cylindrical internal holding body, said optical flat plate, and said second hollow cylindrical internal holding body; and a reflecting mirror which is a constituent element of an optical resonator securely fitted into said seal casing at the outer end so that said first hollow cylindrical internal holding body, said optical flat plate, and said second hollow cylindrical internal holding body receive a compressive force.

4,064,467

SEMICONDUCTOR-OSCILLATOR EMPLOYING LOGIC CIRCUITRY HAVING AT LEAST ONE ACTIVE ELEMENT

Hanspeter Küpfer, Scherz, Switzerland, assignor to Siemens-Albis Aktiengesellschaft, Zurich, Switzerland

Filed July 19, 1976, Ser. No. 706,843

Claims priority, application Switzerland, Aug. 26, 1975, 11019/75

Int. Cl.² H03K *3/28*

U.S. Cl. 331—108 D **13 Claims**

7. A semiconductor-oscillator comprising a logic circuit containing at least one active element, said logic circuit pos-

sessing an input, an inverting output and a non-inverting output, a resistor connecting the input with the inverting output,

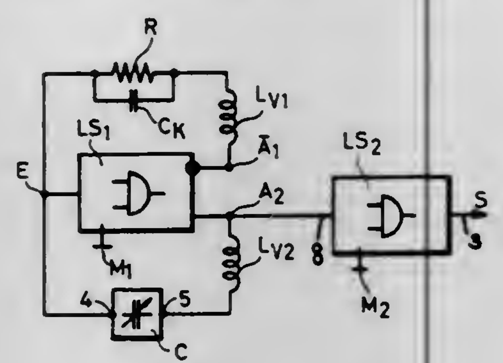

a capacitor connecting said input with the non-inverting output, and a capacitor connected in parallel with said resistor.

4,064,468
LOW VOLTAGE COMPENSATOR FOR POWER SUPPLY IN A COMPLEMENTARY MOS TRANSISTOR CRYSTAL OSCILLATOR CIRCUIT
Kiyoshi Kumata, Tenri, Japan, assignor to Sharp Kabushiki Kaisha, Osaka, Japan
Filed Aug. 26, 1976, Ser. No. 718,069
Claims priority, application Japan, Aug. 29, 1975, 50-105386
Int. Cl.² H03B *5/36*
U.S. Cl. 331—116 R **4 Claims**

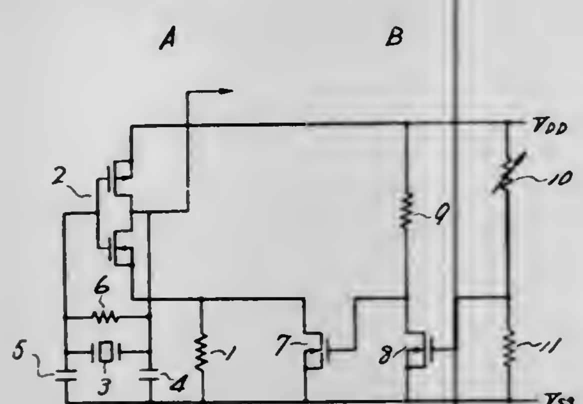

1. In a complementary MOS transistor crystal oscillator circuit including two power supply terminals, a C-MOS inverter connected across said two power supply terminals, a quartz crystal vibrator connected between an input terminal and an output terminal of said C-MOS inverter, and a source resistor connected between the source of one transistor of the C-MOS inverter and one of said two power supply terminals, the improvement comprising:
- switching means connected in parallel with the source resistor for shunting said source resistor when said switching means is closed; and
- control means for closing the switching means when the power supply voltage is below a predetermined value.

4,064,469
INTERCHANGEABLE SOLID STATE AND THERMAL-MAGNETIC TRIP UNITS
Carl E. Gryctko, Bellefontaine, Ohio, assignor to I-T-E Imperial Corporation, Spring House, Pa.
Filed Apr. 12, 1976, Ser. No. 675,969
Int. Cl.² H01H *75/00, 77/00*
U.S. Cl. 335—6 **5 Claims**

1. A removable and replaceable multi-pole solid state trip unit assembly constructed to be positioned within a housing for a molded case multi-pole circuit breaker in place of a removable thermal-magnetic trip unit assembly; said solid state trip unit assembly including an insulating frame including a wall, main circuit conductor means for each pole of said assembly extending forward and behind said wall, individual first means for monitoring current flow in each of said conductor means, solid state circuitry for processing signals transmitted thereto by said first means and generating a tripping signal upon the occurrence of predetermined fault conditions; all of said first means and said solid state circuitry being positioned behind

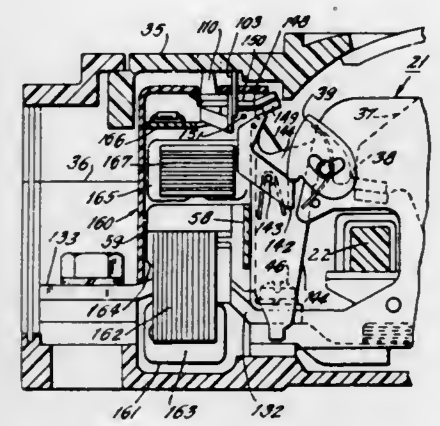

said wall; said conductor means having its front end adapted for connection to cooperating contact means within a circuit breaker housing wherein said solid state trip unit assembly is to be installed in place of a thermal-magnetic trip unit assembly; said conductor means having its rear end adapted for connection with elements external to such circuit breaker housing.

4,064,470
OBTURATOR STRUCTURE FOR SILENT AUTOMOTIVE RELAY
Rodney Hayden, Stoney Creek, Canada, assignor to TRW Inc., Cleveland, Ohio
Filed June 20, 1975, Ser. No. 588,865
Int. Cl.² H01H *1/00*
U.S. Cl. 335—196 **6 Claims**

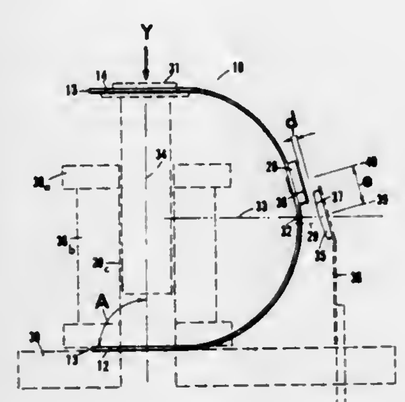

1. A silent obturator for a direct current relay having a stationary anchorage and spaced therefrom a movable anchorage, the latter being movable in the line of direction generally toward the stationary anchorage, said obturator comprising: a flexible strip of material having stationary and movable mounting end portions defining respectively between the ends thereof a predetermined unsupported length between said mounting portions, said unsupported length being substantially greater in length than the maximum distance between the stationary anchorage and the movable anchorage of the relay and defining a curve along said unsupported length of the strip between said anchorages upon fixture of the stationary mounting portion to the stationary anchorage and fixture of the movable mounting portion to the movable anchorage; and a contact member including contact surfaces thereof comprising electrically conducting material located on said strip at least near the midpoint of the unsupported length of said strip and remote from said stationary anchorage portion, said contact surfaces being movable in a direction substantially tangent to the curve of the strip at said contact surfaces.

4,064,471
ELECTROMAGNETIC RELAY
John C. Schuessler, West Covina; Marvin G. Nelsen, Irvine, and David J. Tapp, Manhattan Beach, all of Calif., assignors to Leach Corporation, Los Angeles, Calif.
Filed Mar. 22, 1976, Ser. No. 669,215
Int. Cl.² H01H *51/22*
U.S. Cl. 335—229 **5 Claims**

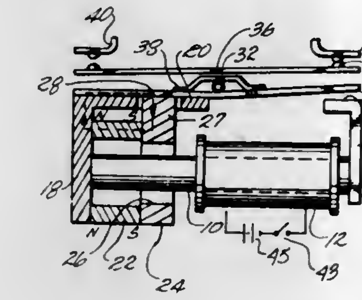

1. A relay comprising a magnet structure including an electromagnet and a permanent magnet, the electromagnet including a magnetic core, a pair of pole members extending from the ends of the core, and a coil wound on the core, the permanent magnet including a pair of pole members, one of which is common with one of the pole members of the electromagnet, the pole members forming three pole faces, an elongated armature, means pivotally securing the armature to the magnet structure, first and second of the pole faces being positioned adjacent the armature on one side of the pivot axis toward one end of the armature and the third pole face being positioned adjacent the armature on the other side of the pivot toward the other end of the armature such that pivotal movement of the armature moves one end of the armature toward two of the pole faces while moving the other end of the armature away from the third pole face, the air space between the two pole faces on one side of the pivot being substantially smaller than the air gap between either of said pole faces and the third pole face, the permanent magnet polarizing said first and second pole faces in opposite polarity and attracting said armature toward said two pole faces, the coil, when energized, tending to reverse the polarity in one of said two pole faces to reduce the force exerted on the armature by the permanent magnet while polarizing the third pole face to the polarity of the other of said two pole faces.

4,064,472
COMPACT INDUCTOR
Shelly J. Gunewardena, Lynwood; Leslie P. Glick, N. Hollywood, and Yoshinobu F. Sakihara, Los Angeles, all of Calif., assignors to Vanguard Electronics Company, Inc., Inglewood, Calif.
Filed Apr. 8, 1976, Ser. No. 674,758
Int. Cl.² H01F *15/10, 27/30*
U.S. Cl. 336—65 **5 Claims**

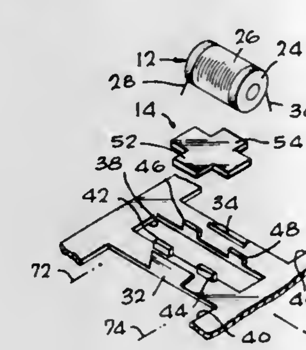

1. An inductor comprising:
- a flat frame of sheet metal having a mount slot extending thereacross to divide the frame into two separated frame halves;
- each frame half having upper and lower surfaces and a pair of upstanding tabs lying at the edge of said slot, the two tabs of each pair being spaced a predetermined distance apart, and each frame half having a partially upstanding flange which is spaced from the slot and which is tapered in width with the top being of greatest width and which extends at less than 90° from the plane of the frame;
- a plate of insulating material extending across said slot and having a pair of legs, each leg received between a pair of tabs;
- a bobbin which includes a coil of electrically conductive wire wound on a spool, said bobbin being mounted on said insulator, and the ends of said wire being attached to different ones of said flanges, the top of each flange being spaced from said coil to leave a space between them; and
- a mass of electrically insulative encapsulating material disposed about said bobbin, said flanges, said tabs, and said insulator, but the bottom surfaces of each frame half being exposed for the making of electrical connection thereto.

4,064,473
TRANSFORMER WITH WINDINGS IN HELICAL SLOTS OF CORE
Alec Harry Seilly, North Wembley, England, assignor to Lucas Industries Limited, Birmingham, England
Filed Mar. 7, 1977, Ser. No. 775,092
Claims priority, application United Kingdom, Nov. 27, 1976, 49586/76
Int. Cl.² H01F *21/06, 27/30*
U.S. Cl. 336—83 **10 Claims**

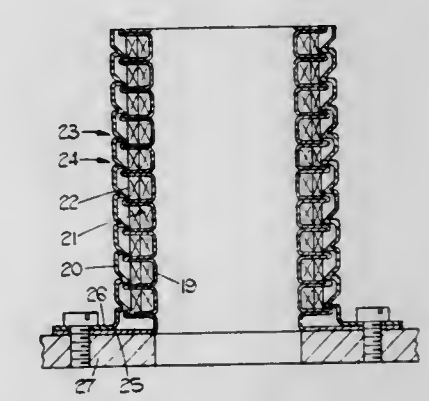

1. An electrical transformer comprising a core structure formed from magnetizable material and at least a pair of electrical windings wound upon the core structure, one of said windings forming the primary winding of the transformer and the other winding or windings forming the secondary winding or windings, the core structure comprising a first element of tubular form which is shaped to define an even number of helical slots arranged in the manner of a two or a multiple of two, start thread, and a second element of tubular form extending across the open ends of said slots, each winding extending along one of said slots and returning along an adjacent slot and each of said slots having side walls and a base wall.

4,064,474
IMPEDANCE RATIO VARYING DEVICE
Guy Emery Adams, Monroe, and Donald Alexander MacPhedran, Tappan, both of N.Y., assignors to Solitron Devices, Inc., Tappan, N.Y.
Filed Nov. 9, 1976, Ser. No. 740,311
Int. Cl.² H01F *29/06*
U.S. Cl. 336—139 **7 Claims**

1. In a device for impedance matching a line and load a means to integrate the package of needed elements, said means comprising:
- end support means;
- a first shaft revolvably supported by at least a portion of said end support means;
- a second shaft;
- means to support said second shaft by the end support means;

an insulating hollow block mounted to said first shaft to rotate therewith;
a first coil electrically connected to said first shaft and wound about said block to be supported thereby;
a commutating wheel rotatably supported on for axial move-

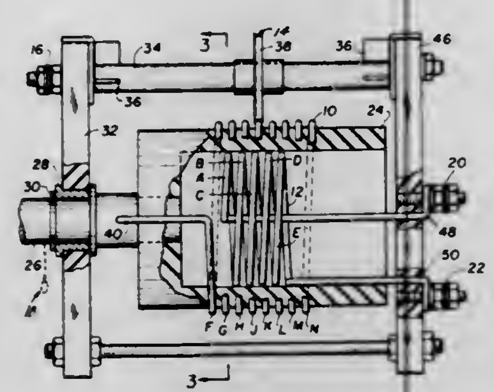

ment along said second shaft, said wheel bridging said second shaft and said first coil to define a path length of said first coil; and
a second coil mounted by said end support means to project within and rotatably support said block and underly said first coil.

4,064,475
THICK FILM VARISTOR AND METHOD OF MAKING THE SAME
Allan V. Kouchich, Milwaukee, and Robert Marshall, Mequon, both of Wis., assignors to Allen-Bradley Company, Milwaukee, Wis.
Filed July 12, 1976, Ser. No. 704,152
Int. Cl.^{2} H01C *7/10*
U.S. Cl. 338—20 **16 Claims**

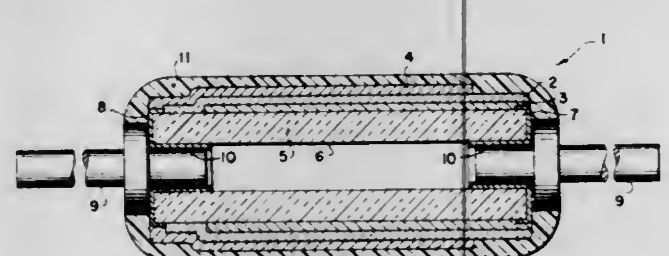

1. A thick film varistor, the combination comprising:
a cylindrical substrate made of an electrically insulating material and having openings at its opposite ends and an outer longitudinal surface;
a pair of terminating layers, one being on each end of said substrate;
a varistor film applied to the outer longitudinal surface of said substrate between said terminating layers;
a pair of electrodes applied to said varistor film, each being in electrical contact with one of said terminating layers; and
a pair of lead wires, each being inserted into an opening of said substrate at one end of said substrate and being in electrical contact with one of said terminating layers.

4,064,476
AIR PRESSURE TRANSDUCER
Robert D. Reis, Hingham, Mass., assignor to United Electric Controls Company, Watertown, Mass.
Filed Aug. 24, 1976, Ser. No. 717,280
Int. Cl.^{2} H01L *10/10*
U.S. Cl. 338—41 **14 Claims**

1. A transducer comprising an element embodying a part movable linearly in response to a change in pressure, a circuit comprising a plurality of resistances arranged in series including a common terminal and a bank of closely spaced terminals, a brush arm, means pivotally supporting the brush arm with its proximal end adjacent the common terminal and its distal end adjacent the bank of terminals for movement of its distal end along the bank of terminals, electrically connected brushes at the proximal and distal ends of the brush arm, said brushes having convex ends for tangential engagement with the terminals, the brush at the proximal end being yieldably held in constant rubbing engagement with the common terminal throughout movement of the brush arm and the brush at the distal end being yieldably held in rubbing engagement with the bank of terminals and being movable from terminal-to-terminal

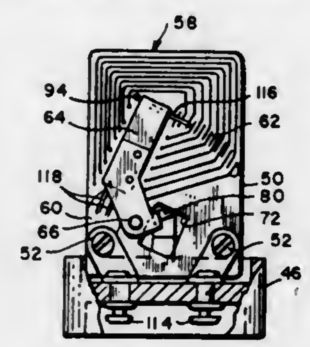

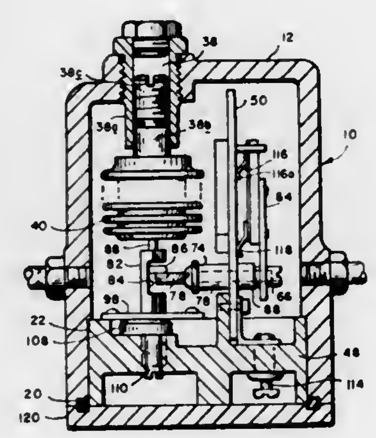

along the bank to add resistance to and remove resistance from the circuit, said brush at the distal end of the arm being narrower than the spaces between the terminals and being adapted by engagement with a terminal to complete a circuit to the common terminal and linkage operably connecting the linearly movable part of the element responsive to pressure to the proximal end of the brush arm for converting the linear movement of the pressure responsive part to rotational movement of the brush arm.

4,064,477
METAL FOIL RESISTOR
Edward E. Thompson, Westmont, N.J., assignor to American Components Inc., Conshohocken, Pa.
Filed Aug. 25, 1975, Ser. No. 607,128
Int. Cl.^{2} H01C *1/08*
U.S. Cl. 338—51 **6 Claims**

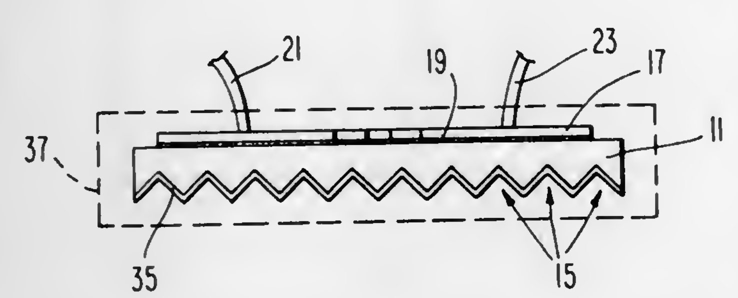

1. A metal foil resistor comprising in combination: a substrate of electrically non-conducting material having first and second relatively large surfaces, said first surface formed substantially flat, said second surface formed with grooves to cause the surface area of said second surface to be substantially in excess of said first surface; a layer of electrically conducting metal foil secured to said first surface, said layer of metal

formed in a zig-zag pattern to provide an elongated path for electricity passing therethrough; first and second electrical wires secured to two different positions on said layer of electrically conducting metal foil; and encapsulating means formed to embed said substrate and said metal foil within and further formed to permit said electrical wires to protrude therefrom.

4,064,478
FLASHER DISPLAY TYPE FISH FINDER
Keisuke Honda, 37, Shinyoshi-cho, Toyohashi, Aichi, Japan
Filed Nov. 15, 1976, Ser. No. 741,799
Claims priority, application Japan, Nov. 29, 1975, 50-142641
Int. Cl.^{2} G01S *9/70, 7/64*
U.S. Cl. 340—3 C **2 Claims**

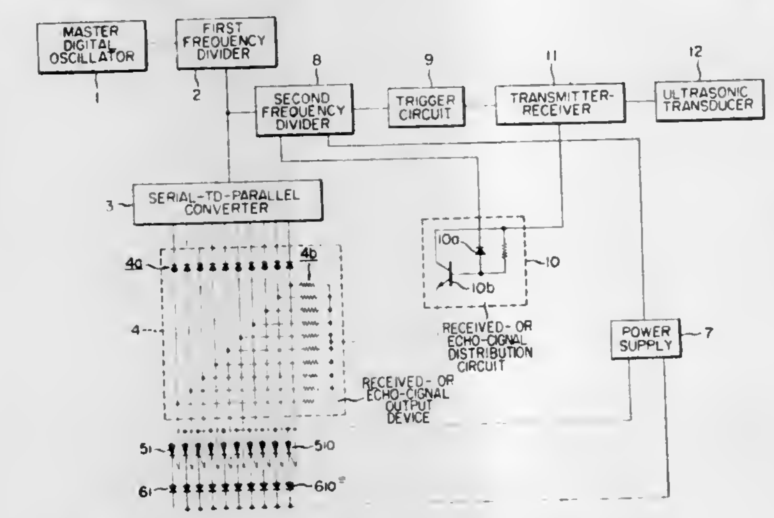

1. A flasher display type fish finder comprising
a. a master digital oscillator,
b. a first frequency divider for converting the output from said master digital oscillator into pulse outputs,
c. a serial-to-parallel converter for converting serial pulse outputs from said first frequency divider into a predetermined number of parallel pulse outputs which are sequentially derived from a plurality of output terminals equal in number to said predetermined number of parallel pulse outputs and equally spaced apart in time and cycled at a predetermined repetition rate,
d. a received signal output device with a plurality of input terminals connected to said plurality of output terminals respectively, of said serial-to-parallel converter and with a plurality of output terminals equal in number to said plurality of output terminals of said serial-to-parallel converter,
e. a plurality of SCRs having their control or gate terminals connected to said output terminals, respectively, of said received signal output device,
f. a plurality of light emitting elements connected to said plurality of SCRs, respectively,
g. a second frequency divider connected to an output terminal of said first frequency divider for generating an output which lasts equal in time to one cycle of said predetermined number of parallel pulse outputs,
h. a received signal distribution circuit responsive to the output from said second frequency divider for energizing said received signal output device,
i. a trigger circuit responsive to a pulse output from said second frequency divider corresponding to the first parallel pulse output from said serial-to-parallel converter for generating a trigger pulse,
j. a transmitter-receiver for amplifying the trigger pulse from said trigger circuit and applying the amplified trigger pulse to an ultrasonic transducer, and
k. a power supply responsive to an output pulse which is generated by said second frequency divider after the last of said predetermined number of parallel pulse outputs has been derived, for disabling said SCRs,

whereby when an echo ultrasonic sound wave pulse reflected from a target is received and converted into an electrical received signal by said transducer, said received signal is amplified by said transmitter-receiver and transmitted to said received signal distribution circuit which in turn transmits said received signal to said received signal output device so that one of said plurality of SCRs whose control or gate terminal is applied with one of said predetermined number of parallel pulse outputs from said serial-to-parallel converter is enabled to conduct and consequently one of said plurality of light emitting elements connected to said conducted SCR is turned on to display the target.

4,064,479
VERTICALLY DIRECTIVE ARRAYS FOR MARINE SEISMIC EXPLORATION
William H. Ruehle, Duncanville, Tex., assignor to Mobil Oil Corporation, New York, N.Y.
Filed Mar. 22, 1976, Ser. No. 669,077
Int. Cl.^{2} G01V *1/38, 1/13, 1/16*
U.S. Cl. 340—7 R **5 Claims**

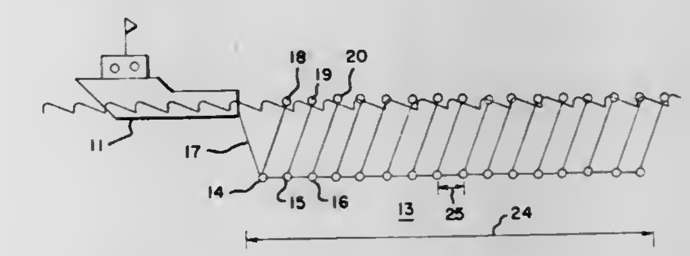

1. In a system for marine seismic exploration comprising:
a marine vessel,
a plurality of seismic energy sources each producing seismic pulses having a broadband frequency content including the lowest frequency, the highest frequency and the predominant frequency of the seismic energy in each pulse,
a plurality of hydrophones for detecting reflected seismic pulses, and
means for towing said sources and said hydrophones in horizontal linear arrays behind said vessel with fixed spacing between said sources, fixed spacing between said hydrophones, and an offset distance between the array of sources and the array of hydrophones,
the improvement wherein the length of at least one of said arrays is longer than the wavelength of the lowest frequency within the broadband frequency content of said seismic pulses, and wherein the spacing between elements of said array is less than the wavelength of the highest frequency within the broadband frequency content of said seismic pulses.

4,064,480
MEANS AND METHOD FOR RECORDING SEISMIC SIGNALS
Donald L. Howlett, Houston, Tex., assignor to Texaco Inc., New York, N.Y.
Filed Nov. 10, 1975, Ser. No. 630,241
Int. Cl.^{2} G01V *1/28;* **H03F** *1/14*
U.S. Cl. 340—15.5 GC **14 Claims**

1. A system which comprises means for receiving an analog input signal, amplifying channel means connected to the receiving means for amplifying a received analog input signal to provide amplified signals of different amplitudes, level comparing means for comparing each amplified signal, except for the least amplitude amplified signal, with reference signals corresponding to a predetermined amplitude range for an analog output and providing a plurality of outputs, each output corresponding to a comparison of a different amplified signal with the reference signals, a plurality of switches, each switch receiving a different amplified signal and responsive to a different sampling pulse to pass the amplified signal when the sampling pulse is present and to block the amplified signal during the absence of a sampling pulse; means connected to the amplifying channel means, to the comparing means and to the

switches for providing the sampling pulses of a predetermined duration and at a predetermined rate to the switches in accordance with the outputs from the comparing means and the least amplitude amplified signal to cause the switches to pass samples of the amplified signal as the analog output; and converter

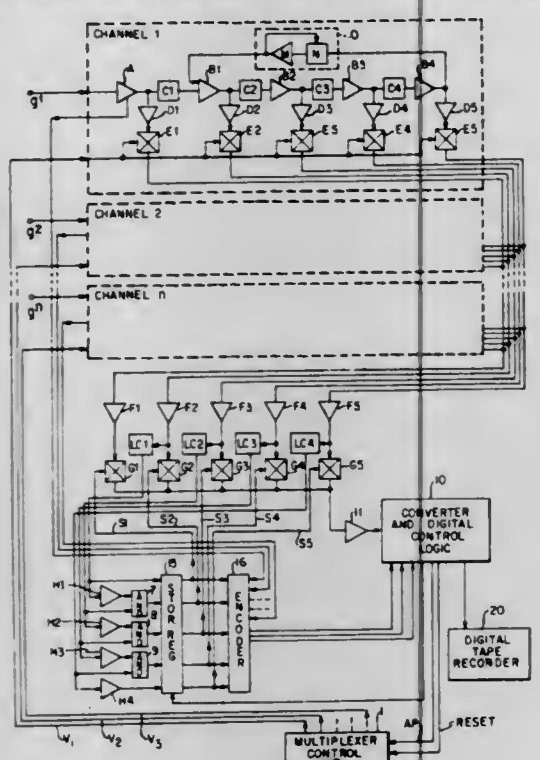

means connected to the switches and to the amplifying channel for providing digital signals, some of which correspond to the gain relationship between the analog input signal and the analog output while the others correspond to the polarity and magnitude of the analog output.

4,064,481
VIBRATOR AND PROCESSING SYSTEMS FOR VIBRATORY SEISMIC OPERATIONS
Daniel Silverman, 5969 S. Birmingham St., Tulsa, Okla. 74105
Continuation-in-part of Ser. No. 407,646, Oct. 18, 1973, Pat. No. 3,984,805. This application Sept. 29, 1975, Ser. No. 617,857
Int. Cl.² G01V *1/14*
U.S. Cl. 340—15.5 TA **20 Claims**

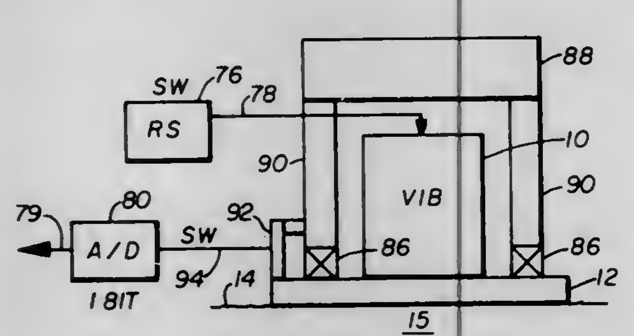

1. Apparatus for seismic prospecting, comprising;
a. a force generating means reference sweep signal comprising a square wave analog signal having succeeding plus and minus zero crossings, of variable frequency, of selected band width, and of selected time duration;
b. a force generating means responsive to said square wave reference sweep signal to create a train of alternately reversing forces on the earth, creating an oscillatory displacement of the earth at a first point on the earth;
c. means responsive to a sensor means to generate an oscillatory analog electrical signal responsive to said oscillatory displacement of the earth at said first point, and to provide a transmitted signal digitized to 1 bit;
d. means to detect the seismic wave generated by said force generating means after passing through the earth, at a second point distant from said first point, and, means to produce a detected signal.

4,064,482
VEHICLE TIRE PRESSURE SUPERVISORY SYSTEM
Wolfgang Maisch, Ville d'Avray; Rainer Burkel, Le Chesnay; Jean Pierre Leroy, Paris, and André Bonin, Aulnay-sous-Bois, all of France, assignors to Robert Bosch G.m.b.H., Stuttgart, Germany
Filed Oct. 15, 1976, Ser. No. 732,788
Claims priority, application Germany, Nov. 7, 1975, 2549946
Int. Cl.² B60C *23/02*
U.S. Cl. 340—58 **14 Claims**

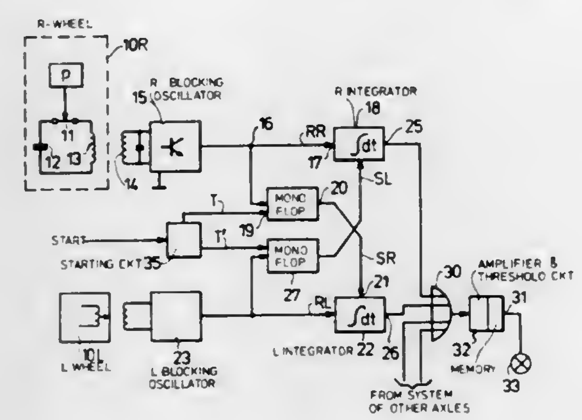

1. Vehicle tire pressure supervisory system for a vehicle having at least two wheels, one each located at opposite ends of an axle, and having
a switch (11) located at each wheel and changing state when the tire pressure in the respective wheel drops below a predetermined level;
network means (12, 13) located at each respective wheel and controlled by the state of the switch (11);
coupling transducers (14, 15; 23) located on the vehicle in sensing relation to the respective network means of the wheels and sensing the circuit state of the associated network means and hence the state of the respective switch and hence the tire pressure said coupling transducers providing sequential output pulses, the frequency of which is a function of tire pressure;
and comprising, in accordance with the invention,
an evaluation circuit (18, 22) associated with each of the wheels at the ends of the axle and connected
a. to the coupling transducer (23) associated with the respective wheel at the opposite end of the axle, and
b. to the coupling transducer (14, 15) of the respective wheel at the associated end of the axle,
said evaluation circuit including
means sensing the respective frequencies of the output pulses from the coupling transducers at opposite ends of an axle and
frequency comparator means comparing the frequencies of the pulse sequences derived from the frequency sensing means and transduced by the coupling transducers of the wheels at opposite ends of the axle and providing an output if the frequency difference exceeds a predetermined level.

4,064,483
ERROR CORRECTING CIRCUIT ARRANGEMENT USING CUBE CIRCUITS
Takashi Takezono, and Hisashige Ando, both of Kawasaki, Japan, assignors to Fujitsu Limited, Kawasaki, Japan
Filed Dec. 13, 1976, Ser. No. 750,152
Claims priority, application Japan, Dec. 18, 1975, 50-150811
Int. Cl.² G06F *11/12*
U.S. Cl. 340—146.1 AL **9 Claims**

1. Error correcting circuit utilizing a cube circuit for correcting errors in the data ($d_0 d_1 d_2 \ldots d_n$) having $n+1$ bits in accordance with the syndromes S_1 and S_3,

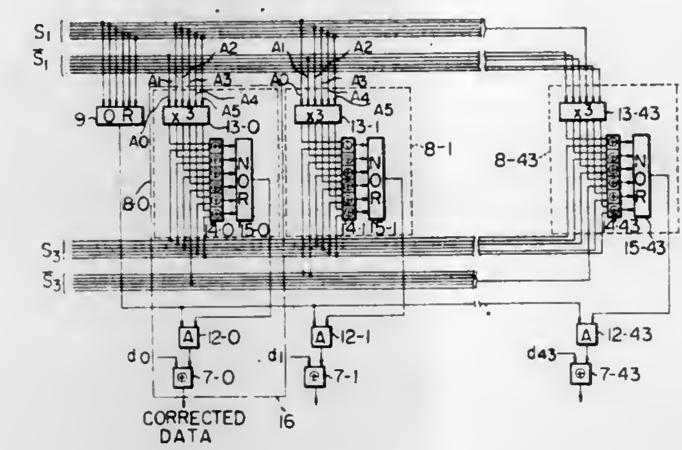

where $S_1 = [a_0\, a_1\, a_2 \ldots . a_n] \begin{bmatrix} d_0 \\ d_1 \\ d_2 \\ \vdots \\ d_n \end{bmatrix}$

$S_3 = [a_0^3\, a_1^3\, a_2^3 \ldots a_n^3] \begin{bmatrix} d_0 \\ d_1 \\ \vdots \\ d_n \end{bmatrix}$

which are obtainable from the calculation of a check matrix H for the BCH code

$$H = \begin{bmatrix} a_0 a_1 a_2 \ldots . a_n \\ a_0^3 a_1^3 a_2^3 \ldots\ldots . a_n^3 \end{bmatrix}$$

said error correcting circuit comprising:
generator means for generating said syndromes S_1 and S_3 based on the check matrix H;
means for providing a term $(S_1 - a_i)$ based on the modulo 2 calculation to the i_{th} line vector

$$\begin{bmatrix} a_i \\ a_i^3 \end{bmatrix}$$

of said check matrix H corresponding to each data bit d_i;
means for multiplying said $(S_1 - a_i)$ term by three times so as to cube said term;
means for providing a term $(S_3 - a_i^3)$ based on the modulo 2 calculation to the i_{th} line vector

$$\begin{bmatrix} a_i \\ a_i^3 \end{bmatrix}$$

of said check matrix H corresponding to each data bit d_i;
check means for checking the accordance between the terms $(S_1 - a_i)^3$— and $(S_3 - a_i^3)$; and
inverting means for inverting said d_i bit when the accordance is detected.

4,064,484
ANALOG-DIGITAL CONVERTER WITH VARIABLE THRESHOLD LEVELS
Michihiro Mese; Takafumi Miyatake, both of Hachioji; Seiji Kashioka, Kokubunji, and Toshimitsu Hamada, Tokyo, all of Japan, assignors to Hitachi, Ltd., Japan
Filed July 26, 1976, Ser. No. 708,633
Claims priority, application Japan, Aug. 1, 1975, 50-93095
Int. Cl.² G06K *9/00*
U.S. Cl. 340—146.3 AG **10 Claims**

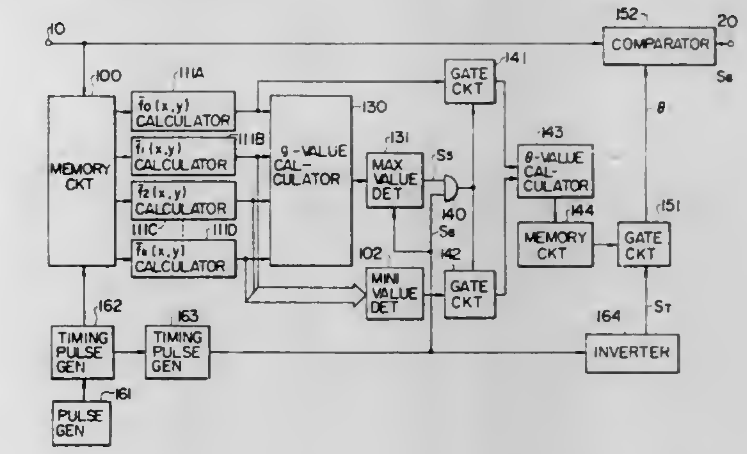

1. An analog-digital converter for use with image pick-up means producing analog signals representative of a two-dimensional pattern of an object which is sequentially scanned, comprising:
comparator means connected to said image pick-up means for converting said analog signals into binary signals on the basis of an applied threshold signal,
sampling means for generating a first signal corresponding to the average value of a portion of said analog signal corresponding to a first pattern of selected size and shape scanned over said object and at least two second signals corresponding to the average value of respective portions of said analog signal corresponding to a pair of second patterns positioned adjacent said first pattern in predetermined relationship and scanned therewith over said object,
first calculator means for detecting the maximum difference value between average levels of said first and second signals,
second calculator means for detecting the minimum average level of said second signals,
first gating means connected to said sampling means and said first and second calculator means for gating the average level of said first signal and the minimum average level of said second signals in response to the output of said first calculator means,
third calculator means connected to said first gating means for generating said threshold signal based on the average value of said first signal and said minimum average level of said second signals, and
second gating means for gating said threshold signal to said comparator means.

4,064,485
DIGITAL LOAD CONTROL CIRCUIT AND METHOD FOR POWER MONITORING AND LIMITING SYSTEM
Warren L. Leyde, Seattle, Wash., assignor to Pacific Technology, Inc., Renton, Wash.
Filed July 22, 1976, Ser. No. 707,564
Int. Cl.² H04Q *9/00;* **H02J** *13/00;* **G06F** *15/56*
U.S. Cl. 340—147 R **19 Claims**

16. A method of automatically controlling the "on/off" states of each of a plurality of electrical loads in response to the steps of monitoring the level of the electrical power delivered to the "on" loads, producing an add control signal for commanding the addition of one of the plurality of loads when power consumption is to be increased, and producing a shed

control signal for commanding the shedding of one of the plurality of loads when power consumption is to be decreased, comprising the steps of:

controlling the "on/off" states of each of the plurality of electrical loads by a corresponding plurality of individually addressable electrical latches, one for each load, wherein each said latch, when addressed, is capable of being disposed in either a load-off state in which the load controlled thereby is switched "off", or a load-on state in which the load controlled thereby is switched "on";

repetitively generating a predetermined sequence of latch-addressing signals and applying said signals to said latches

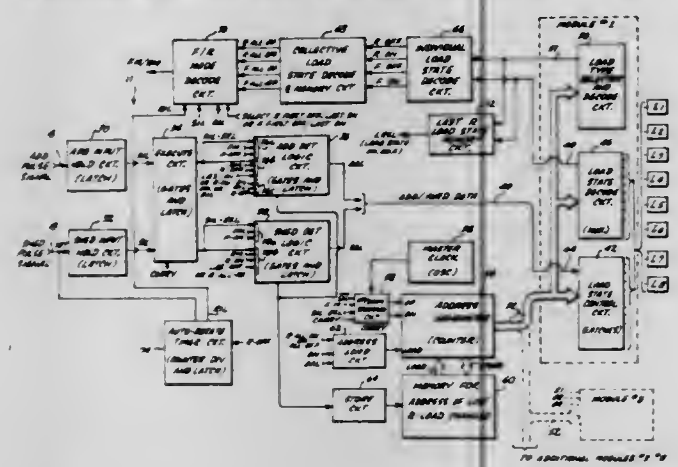

so as to individually address said latches in a given sequence;

sensing the state of each of said latches at a time when each such latch is being addressed by a corresponding one of said latch-addressing signals;

detecting the concurrence of said add control signal and the sensing of a load-off state of one of said latches and in response thereto switching such latch to its load-on state; and

detecting the concurrence of said shed control signal and the sensing of a load-on state of one of said latches and in response thereto switching such latch to its load-off state.

4,064,486
DATA COMMUNICATIONS LOOP SYNCHRONIZER
Ulbe Faber, Honeybrook, Pa., assignor to Burroughs Corporation, Detroit, Mich.
Filed May 29, 1975, Ser. No. 581,937
Int. Cl.² H04Q *11/00*
U.S. Cl. 340—147 SY 3 Claims

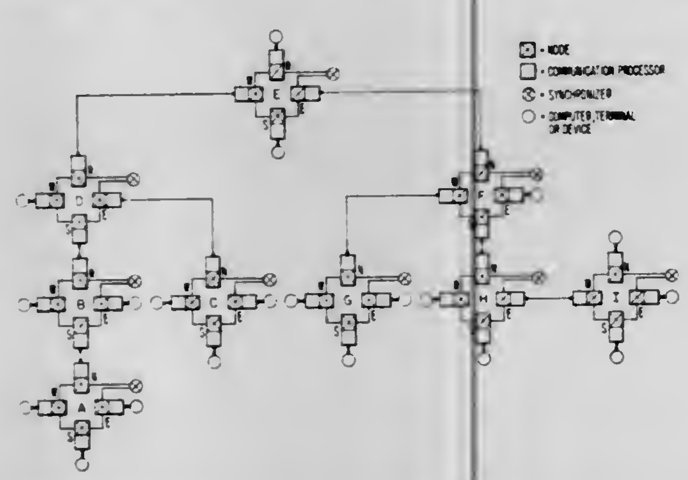

1. An apparatus for use with a serial digital transmission loop having alternately characterized information signals including clock information comprising:

a source of clock pulses;

first means responsive to certain of said clock pulses from said source of clock pulses for forming identical information carrying slots to be transmitted by said serial loop;

second means connected between one end of said serial loop and said first means for receiving said alternately characterized information signals from said serial transmission loop;

third means connected between the other end of said serial transmission loop and said second means and responsive to said certain of said clock pulses and to certain other of said clock pulses from said source of clock pulses for formatting information signals in said formed information carrying slots for transmission by said serial transmission loop; and

fourth means connected between said third means and said first means for characterizing said information signals in said formed information carrying slots responsive to said characterization of said received information signals.

4,064,487
RECEIVER AND DECODER
James B. Russell, Glenshaw; James R. Zewe, and John M. Fruhwald, both of Pittsburgh, all of Pa., assignors to The Alliance Manufacturing Company, Inc., Alliance, Ohio
Filed Nov. 17, 1976, Ser. No. 742,598
Int. Cl.² H04B *1/16;* H04Q *9/12*
U.S. Cl. 340—168 S 19 Claims

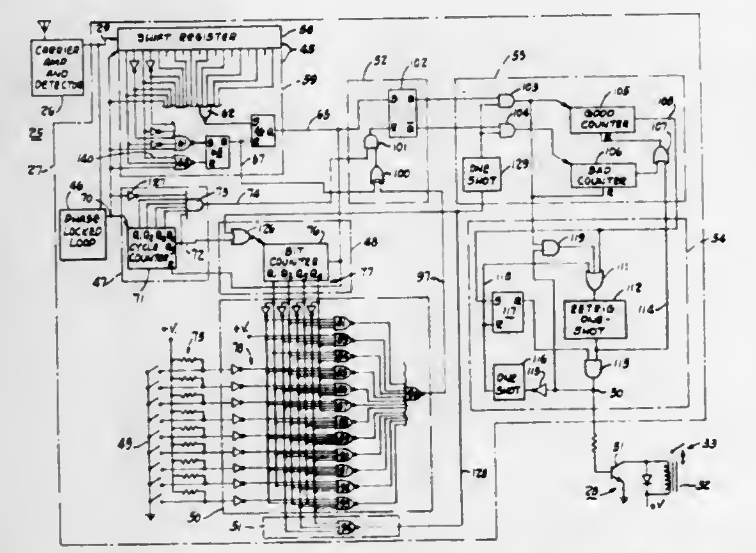

1. A receiver decoder for use with an encoded data train of three different logic conditions of bits, a first bit being X cycles of a first higher modulation frequency, a second bit being $Y = (X/m)$ cycles of a second lower modulation frequency, and a third bit being the series combination of nX cycles of said first frequency and $(1-n)$ (X/m) cycles of said second frequency, where X and Y are different numbers, n is a number less than one and greater than zero, and m is an integer other than one, said receiver decoder comprising, in combination,

a data comparator connected to receive information from said encoded data train,

programmable means connected to establish a programmable bit input,

means to establish a sequential bit count connected to control said programmable bit input to said data comparator to compare sequentially the programmable bits with the information from the encoded data train for each bit unit of time generated by said sequential bit count means,

and means to provide an output signal from said receiver decoder upon the incidence of a given number of bit groups that compare satisfactorily.

4,064,488
SAMPLED SIGNAL DETECTOR
Ronald Howard Chapman, Wheaton, Ill., assignor to Motorola, Inc., Schaumburg, Ill.
Filed June 10, 1976, Ser. No. 694,744
Int. Cl.² H04Q *9/08;* G06F *11/00*
U.S. Cl. 340—171 R 18 Claims

1. A sampled signal detector for detecting a predetermined signal, comprising:

a. signal storage means having first input means for receiving sample bits of data signals when an activation signal is

applied to a second input thereof, said storage means having the capacity to store first and second pluralities of sample bits;

b. correlation means connected to said signal storage means for comparing a first plurality of sample bits stored in said storage means to a second plurality of sample bits stored therein and providing an indication of correlation therebetween; and

c. variable timing means connected to said storage means and providing activation signals thereto at predetermined time intervals, said timing means further being connected to said correlation means to receive the indications of

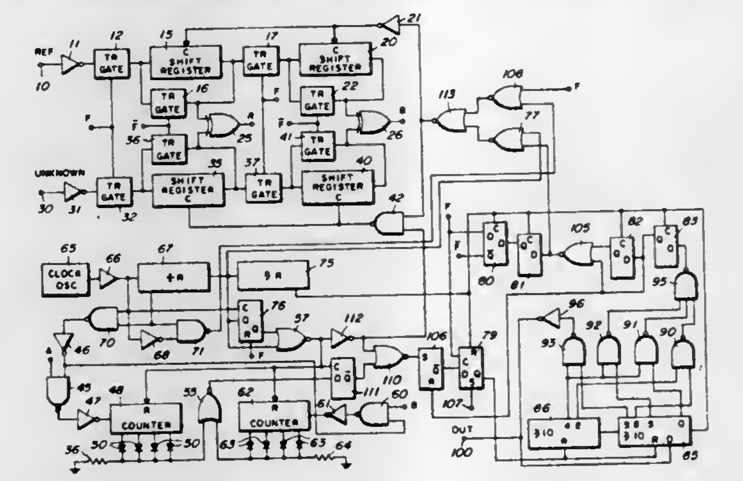

correlation for varying the predetermined time interval upon the occurrence of a correlation in the correlation means, and said timing means including output means for providing a detection signal upon the occurrence of a predetermined number of successive correlations.

15. A method of detecting a predetermined periodically recurring signal comprising the steps of:

a. correlating a portion of the signal with a portion of the signal received at a previous interval;

b. varying the interval each time correlation occurs; and

c. providing an output signal after the occurrence of a predetermined number of successive correlations.

4,064,489
APPARATUS FOR SEARCHING COMPRESSED DATA FILE
Edward Babb, Stevenage, England, assignor to International Computers Limited, Stevenage, England
Filed Aug. 6, 1975, Ser. No. 602,273
Claims priority, application United Kingdom, Oct. 29, 1974, 46651/74
Int. Cl.² G06F *5/02, 7/34*
U.S. Cl. 364—200 4 Claims

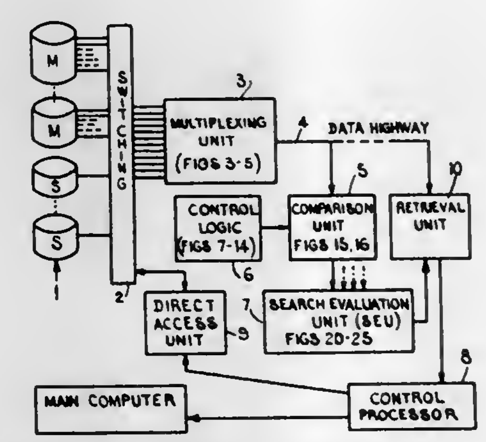

1. A data processing system comprising:

a. a data storage unit holding a sequence of records, each record comprising at least one data item;

b. an intermediate result store;

c. means for storing a search key;

d. comparison means connected to receive data in said sequence from the data storage unit, for performing comparison operations between each data item so received and said search key and writing any result of those comparison operations into the intermediate result store;

e. means connected to receive data in said sequence from the data storage unit, concurrently with reception of that data by the comparison means, for producing an end of record signal upon detection of the end of each said record;

f. means connected to the intermediate result store for producing an enable signal upon detection of the presence of a result in the intermediate result store;

g. a final result store connected to receive data from the intermediate result store; and

h. means responsive to said end of record signal simultaneously with said enable signal for causing transfer of data from the intermediate result store to the final result store.

4,064,490
INFORMATION RETRIEVAL SYSTEM HAVING SELECTED PURPOSE VARIABLE FUNCTION TERMINAL
Robert H. Nagel, 10 Dubon Court, New York, N.Y. 11735
Filed Sept. 10, 1975, Ser. No. 611,927
Int. Cl.² G06F *3/04*
U.S. Cl. 364—200 21 Claims

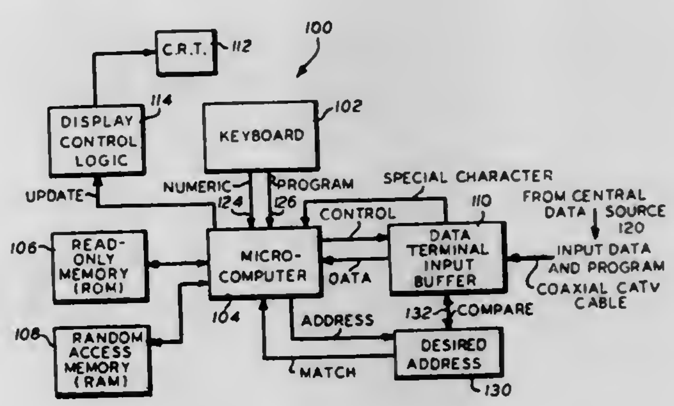

1. An information retrieval system comprising a remote information source for remotely transmitting information in a predetermined format over a common predetermined transmission media; and a local variable selectable function terminal operatively connected to said remote information source via said common transmission media for selectably receiving said remotely transmitted information, said remote information source transmitted information comprising displayable data and a plurality of different sets of control instructions for said terminal, each of said sets of control instructions corresponding to a different selectable function for said terminal, said terminal comprising microcomputer means for controlling the operation thereof, said microcomputer means being operatively connected to said transmission media for receiving said remotely transmitted information, said sets of control instructions for said terminal comprising sets of control instructions for said microcomputer means, selection means operatively connected to said microcomputer means for variably selecting a first selectable function for said terminal from a plurality of different selectable functions for said terminal, local storage means for selectably retrievably locally storing either said remotely transmitted displayable data or a first one of said remotely transmitted selected set of control instructions for said microcomputer means corresponding to said first selected function for said terminal, said local storage means being operatively connected to said microcomputer means, means operatively connectable to said microcomputer means, to said selection means and to said local storage means for selectively controlling the local storage of said remotely transmitted information in said local storage means dependent on said selected function for said terminal, said microcomputer means being operable in accordance with said locally stored remotely transmitted first one of said selected set of control instructions, and display means operatively connected to said microcomputer means, said microcomputer means selectively enabling either a

direct display of said remotely transmitted displayable data or processing incoming data to said terminal in accordance with said locally stored remotely transmitted first one of said selected set of control instructions for providing a displayable processed output therefrom on said display means, said local storage selective control means including means for enabling local storage in said local storage means of a different one of said plurality of remotely transmitted sets of instructions in place of said first one of said locally stored selected remotely transmitted selected set of instructions in response to selection of a different selected function by said selection means, said microcomputer means varying the manner in which said incoming data is processed dependent on which one of said different sets of instructions for said microcomputer means is locally stored, whereby a local downstream program grabbing and data display meas for remotely transmitted information is provided.

4,064,491

INFORMATION MEMORY FOR STORING INFORMATION IN THE FORM OF ELECTRIC CHARGE CARRIERS AND METHOD OF OPERATING THEREOF

Karl Knauer, Gauting, and Hans Joerg Pfleiderer, Zorneding, both of Germany, assignors to Siemens Aktiengesellschaft, Berlin & Munich, Germany

Filed Sept. 15, 1976, Ser. No. 723,312
Claims priority, application Germany, Sept. 30, 1975, 2543628
Int. Cl.² G11C *11/24*
U.S. Cl. 365—149 18 Claims

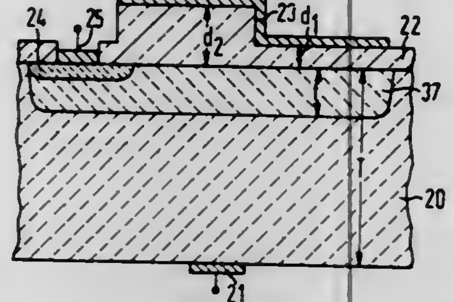

18. A method of operating an information memory of the type which comprises a semiconductor substrate including a doped zone, an oppositely doped zone, a substrate surface and a substrate terminal, a memory element carried by the substrate including an MIS capacitor comprising an insulating layer carried on said surface over said doped zone and a capacitor electrode carried on said insulating layer, a contact zone in said substrate and a contact terminal carried on said contact zone, said contact zone in contact with said MIS capacitor and comprising a material which provides a diode effect where said zone contacts the doped material of said substrate, and wherein at least one of the values of the ratio of the dielectric constant ϵ of the insulating layer to the thickness d of the insulating layer, the surface density of substrate doping with respect to substrate surface in the area of the MIS capacitor, and the surface density of opposite substrate doping in the adjacent oppositely doped zone is selected to respond to the application of a voltage across said substrate terminal and said capacitor electrode to effect a local distribution of potential within said MIS capacitor, with respect to the contact area, which includes at least one increase from a minimum value to a maximum value, said method comprising the steps of: applying a reference voltage to the substrate terminal, for reading information into the memory applying an electrode voltage with respect to the reference voltage to produce a potential maximum difference ΔM in the MIS capacitor range, applying a voltage to the contact zone which has a magnitude which is either larger or smaller than the amount of the minimum local potential value, for storing information applying a voltage to the contact zone which has a larger value than the value of the minimum value, and for reading information out, applying an electrode voltage to provide a decrease in the maximum potential difference ΔM, whereby the applied voltage to the contact zone is larger than the new minimum value.

4,064,492

VIRTUALLY NONVOLATILE RANDOM ACCESS MEMORY CELL

Fritz L. Schuermeyer, 1759 Southview, Yellow Springs, Ohio 45387, and Charles R. Young, 241 Cato Drive, Xenia, Ohio 45385

Filed Oct. 5, 1976, Ser. No. 729,633
Int. Cl.² G11C *7/00, 11/24, 11/34*
U.S. Cl. 365—184 2 Claims

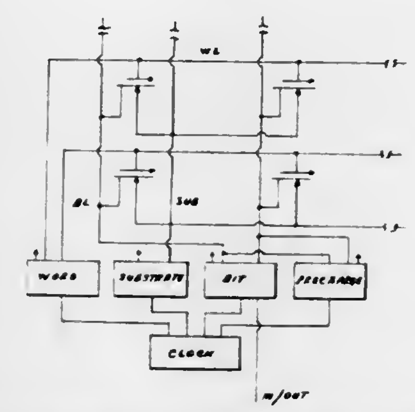

2. The method of transferring to nonvolatile form and recovering information written in volatile form in a Nonvolatile Charge Injection Device (NOVCID) having a field plate, a n+ area, and a substrate, said method comprising the steps of:

a. applying a pulse of approximately +25 volts and approximately 1 millisecond duration to the said field plate transferring the said volatile written information into nonvolatile form; and
b. recovering the said nonvolatile stored information by first placing the NOVCID Into accumulation by applying approximately zero volts to the said field plate and approximately +5 volts on the said substrate, then applying a pulse of approximately +10 volts and approximately 50 nsec duration on the said field plate while sensing the magnitude of the said charge on the said n+ area, the magnitude of the said charge being indicative of the said stored information.

4,064,493

P-ROM CELL HAVING A LOW CURRENT FUSIBLE PROGRAMMING LINK

Walter Lee Davis, Plantation, Fla., assignor to Motorola, Inc., Schaumburg, Ill.

Filed June 3, 1976, Ser. No. 692,699
Int. Cl.² G11C *11/40, 17/00*
U.S. Cl. 365—96 6 Claims

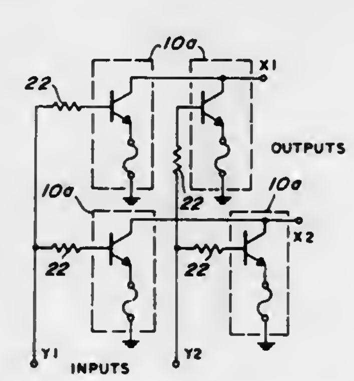

1. A permanently alterable semiconductor cell comprising at least a transistor and a fusible elements, the fusible element being coupled in series with an element of said transistor for being fused by a predetermined current through said transistor, said predetermined current being substantially greater than the normal operating current of said transistor, the fusible element being positioned for receiving thermal energy from a junction region of said transistor whereby the predetermined current required for fusing the element is substantially reduced due to said thermal energy.

4,064,494

CONTENT ADDRESSABLE MEMORIES

John Flackett Dickson, and Raymond Edward Oakley, both of Northampton, England, assignors to Plessey Handel und Investments A.G., Zug, Switzerland

Filed Oct. 9, 1975, Ser. No. 621,028
Claims priority, application United Kingdom, Oct. 11, 1974, 44061/74
Int. Cl.² G11C *11/40*
U.S. Cl. 365—49 7 Claims

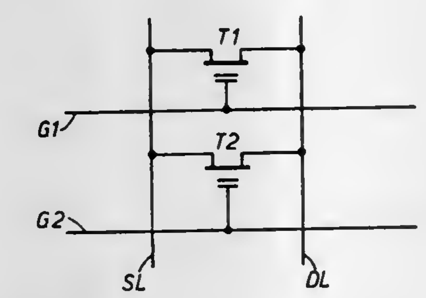

1. A content addressable memory comprising a plurality of storage elements, each said storage element comprising two non-volatile storage devices, having inputs, which can be non-destructively read and which are adapted to respectively store true and inverse information data, a pair of input terminals for receiving input information data, means for connecting said input of each of said storage devices with a separate input terminal, means for storing true information data in one of said storage devices, for storing inverse information data in the other of said storage devices, and for simultaneously comparing said input information data with said true and inverse information data stored in said storage devices.

4,064,495

ION IMPLANTED ARCHIVAL MEMORY MEDIA AND METHODS FOR STORAGE OF DATA THEREIN

Conilee G. Kirkpatrick, Schenectady; James F. Norton, Alplaus, and George E. Possin, Schenectady, all of N.Y., assignors to General Electric Company, Schenectady, N.Y.

Filed Mar. 22, 1976, Ser. No. 669,404
Int. Cl.² G11C *17/06, 11/36*
U.S. Cl. 365—103 21 Claims

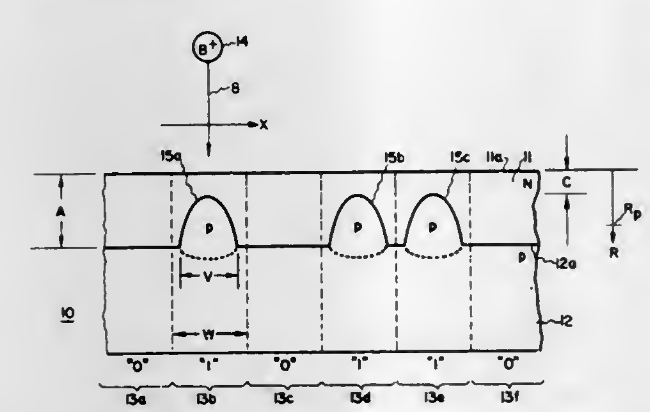

18. A method for storing bits of data in a memory medium, said method comprising the steps of

providing a planar semiconductor diode structure having a first surface on which is defined an array of possible data storage sites;
implanting a region of semiconductor material into one layer of said planar diode structure to form an auxiliary diode therein only at each selected one of a plurality of said data storage sites to permanently store a first data value thereat; and
preventing implantation of a semiconductor auxiliary diode region at each of the remaining ones of said plurality of data storage sites to store a remaining data value thereat.

4,064,496

WAVERING CONDUCTOR LOOPS FOR MAGNETIC DOMAIN MEMORIES

Jon H. Myer, Woodland Hills, Calif., assignor to Hughes Aircraft Company, Culver City, Calif.

Filed July 1, 1976, Ser. No. 701,829
Int. Cl.² G11C *19/08*
U.S. Cl. 365—19 13 Claims

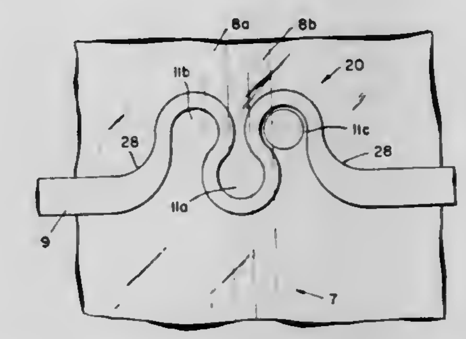

1. A conductor configuration for positioning a captured magnetic bubble in a magnetic domain device comprising a uniaxial anisotropic magnetocrystalline platelet in a magnetic bias field, said conductor configuration comprising:

a. a wavering loop pattern defining three contiguous domain retaining regions in magnetic field coupled relationship to the crystalline platelet, said pattern oriented so that current flowing through the conductor pattern induces a magnetic field having a first polarity in a center region and a magnetic field having an opposite polarity in the remaining two regions, and
b. decision control means for selectively directing a bubble into one of said remaining regions when current flowing in the wavering loop pattern induces a magnetic field of said first polarity having a tendency to repel the magnetic bubble from the center region.

4,064,497

SENSORS FOR SENSING A PLURALITY OF PARAMETERS

Edward F. Sidor, Lombard, Ill.; Charles C. Camillo, La Jolla, Calif., and Glenn W. Bowen, Northbrook, Ill., assignors to Illinois Tool Works Inc., Chicago, Ill.

Division of Ser. No. 668,093, March 18, 1976, Pat. No. 4,045,787. This application Oct. 18, 1976, Ser. No. 733,729
Int. Cl.² G08C *19/06*
U.S. Cl. 340—197 12 Claims

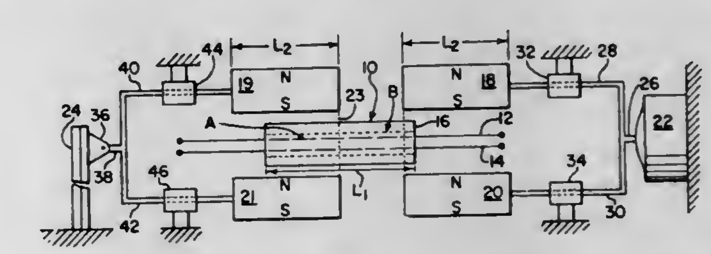

1. A sensing device for sensing two independent conditions comprising an elongated magnetically responsive element, first elongated magnet means positionable adjacent a first portion of said element so as to create a response by said element that is dependent upon a first amount of said element that is adjacent said magnetic means, first control means responsive to a first condition for positioning said first magnet means relative to said responsive element, second elongated magnet means positionable adjacent a second portion of said element so as to create a response by said element that is dependent upon a second amount of said element that is adjacent said magnet means and second control responsive to a second condition for

positioning said second magnet means relative to said responsive element.

4,064,498

ELECTRICAL CIRCUITRY FOR DETECTING A COMBUSTIBLE MIXTURE OF GAS IN A MINE ATMOSPHERE

John F. Burr, Pittsburgh, and Homayoun Hadi, Library, both of Pa., assignors to Consolidation Coal Company, Pittsburgh, Pa.

Continuation-in-part of Ser. No. 625,848, Oct. 28, 1975, abandoned. This application Dec. 15, 1976, Ser. No. 750,877

Int. Cl.² G08B *21/00*

U.S. Cl. 340—237 R **15 Claims**

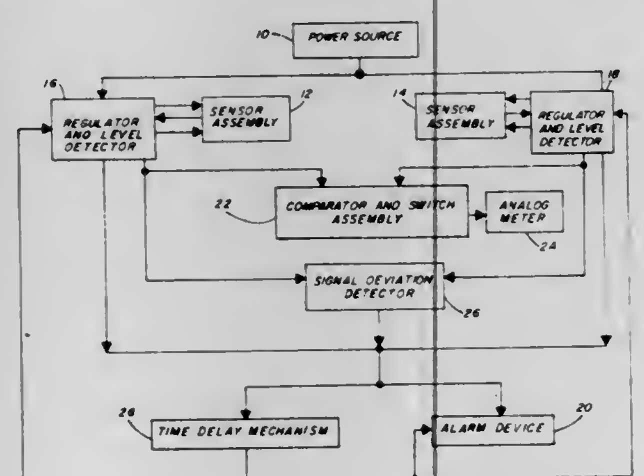

1. Electrical circuitry for detecting a combustible mixture of gas in a mine atmosphere comprising,

sensor means for continuously monitoring the level of combustible gas in the mine atmosphere,

said sensor means operable to supply output signals proportional to the concentration of the combustible mixture of gas in the mine atmosphere,

power means for actuating said sensor means,

regulator means for maintaining a preselected input signal to said sensor means,

said regulator means having detector means for comparing the output signals of said sensor means with a preselected signal and generating an input signal proportional to said output signals from said sensor means,

an alarm device for actuating a preselected alarm signal to indicate the presence of a combustible mixture of gas in the mine atmosphere, said alarm device arranged to receive an output signal from said regulator detector means for actuating the alarm signal when the output signals of said sensor means exceed a preselected value indicating the presence of a combustible mixture of gas in the mine atmosphere,

comparator means connected to said regulator means and said power means,

said comparator means operable to receive said input signals proportional to said sensor means output signals from said regulator means and to generate a corresponding output signal responsive to the maximum input signal received,

meter means connected to said power means and said comparator means for recording the maximum value of the input signals received by said comparator means from said regulator means, and

signal deviation detector means for receiving input signals from said regulator means and operable to actuate said alarm device and thereby indicate an excess deviation between the output signals of said sensor means.

4,064,499

INTRUSION WARNING SYSTEM UTILIZING AN ELECTRIC FIELD

Theodore D. Geiszler, Los Gatos, and Ronald W. Mongeon, San Jose, both of Calif., assignors to Stellar Systems, Inc., Santa Clara, Calif.

Filed Sept. 12, 1975, Ser. No. 612,918

Int. Cl.² G08B *13/24*

U.S. Cl. 340—258 C **28 Claims**

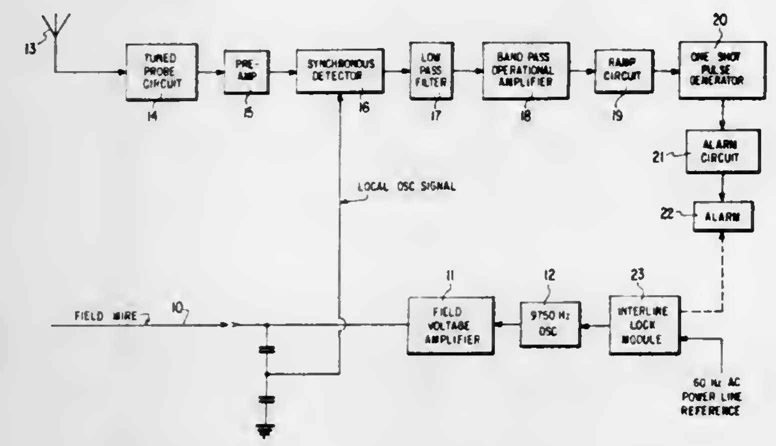

1. An intrusion warning system for indicating the presence of an intruder in a given area comprising in combination: means for producing a quasi-stationary electric field within said area including a field wire insulated from ground and an oscillator circuit having its output connected to said field wire, said oscillator producing an output signal having a wavelength which is very long compared to the length of said field wire and a frequency which is in the range of from 1–40KHz; a receiving antenna within said area for receiving said electric field; an amplifier; means for connecting the output of said antenna to the input of said amplifier; an AM detector means connected to the output of said amplifier for detecting changes in the received and amplified electric field signals; a lowpass filter means connected to the output of said detector for filtering out signals above 20Hz; voltage amplifying means connected to the output of said lowpass filter for amplifying the filtered detected signal, said amplifying means including bandpass filter means for passing only the low frequency component of the detected signal in the range of from 0.2 to 2Hz due to movement of an intruder in said given area; threshold circuit means connected to the output of said amplifying means for producing an output signal whenever the input signal thereto exceeds a predetermined threshold value; and means, responsive to said output signal from said threshold circuit means, for providing an alarm indicating the presence of an intruder within said given area.

4,064,500

STRAIN DETECTION APPARATUS AND METHOD FOR RADIOLOGICAL EQUIPMENT

Henry R. Sokol, Broadview Heights, and Jack R. Sorwick, Novelty, both of Ohio, assignors to Picker Corporation, Cleveland, Ohio

Filed Mar. 19, 1976, Ser. No. 668,623

Int. Cl.² G08B *21/00*

U.S. Cl. 340—267 R **14 Claims**

14. Apparatus for supporting a suspended load, comprising:

a. a primary cable connected for supporting the load;

b. a secondary cable connected to the load independently of other support cables, said secondary cable supplying a

supplemental supporting force which is a function of the amount of strain in the primary cable, and

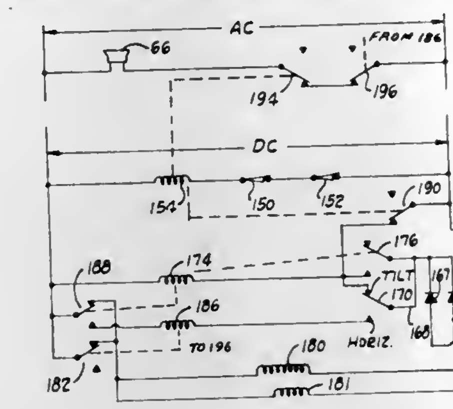

c. apparatus responsive to the exertion of a predetermined amount of supplemental force by the secondary cable to produce a warning signal.

4,064,501

CONTROL SYSTEM

Charles N. Yost; Millard R. Bolyard, and Leon M. Whitmer, all of Frederick, Md., assignors to Unitrol, Inc., Frederick, Md.

Filed Aug. 28, 1975, Ser. No. 608,635

Int. Cl.² G08B *21/00;* **G07B** *15/00;* **G07C** *11/00*

U.S. Cl. 340—286 R **21 Claims**

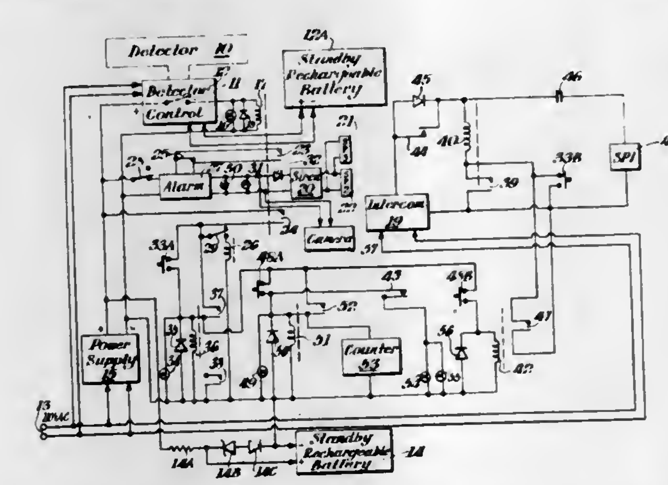

1. A system for controlling the servicing of vehicles driven by customers arriving in service areas where a vehicle is brought to a stop to obtain service which system comprises, in combination:

means responsive to said arrival of said vehicle in a service area for announcing its arrival and means for electrically energizing a control means which is responsive to an unauthorized departure of said vehicle;

said control means;

an alarm means for effecting an alarm when activated by said control means when it responds to an unauthorized departure;

means for preventing the energizing of said control means in the absence of a stopped vehicle;

means for announcing an authorized departure of said vehicle; and

means for preventing the operation of any of the aforesaid means except in a programmed sequence, the first of which sequence after said announced arrival is the activation of said control means.

4,064,502

POSITIONING CONTROL SYSTEM FOR ALPHANUMERIC DISPLAYS

William H. Saylor, South Laguna, and James O. Narey, Westminster, both of Calif., assignors to Associated Data Concepts, Costa Mesa, Calif.

Continuation-in-part of Ser. No. 547,081, Feb. 4, 1975, abandoned. This application Dec. 8, 1975, Ser. No. 638,390

Int. Cl.² G09F *9/00*

U.S. Cl. 340—324 R **21 Claims**

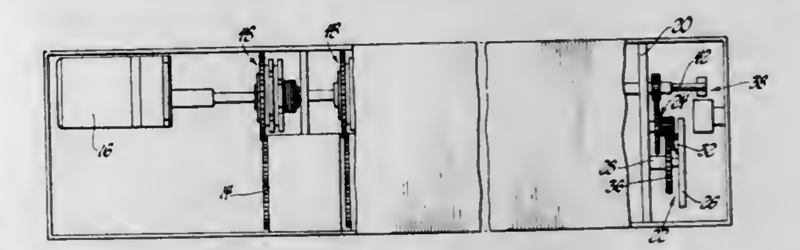

1. In a changeable sign, apparatus for positioning a plurality of display devices in individually selectable rotative positions, a common drive shaft for all of said devices, a reversible motor connected with the drive shaft, a separate clutch means for each device adapted to be engaged for coupling the respective device to the drive shaft, selector means for producing a desired position signal for each device, shaft position encoding means connected with said drive shaft and adapted to produce a shaft position signal, motor control means connected with the shaft position encoding means for energizing the motor in a reverse direction to drive each device to a home position and energize it in a forward direction when the home position is reached, said encoded means being connected with said selector means to cause the selector means to produce a command signal when the shaft position signal bears a predetermined relation to the desired position signal for each device, clutch control means connected with the clutches and the selector means and being responsive to the command signals for selectively engaging each of the clutch means to couple the respective devices to the shaft during shaft displacement corresponding to the rotational distance between the home position and the desired position for the respective device.

4,064,503

CHANGEABLE PRINTED ALPHANUMERIC DISPLAY MODULE

William H. Saylor, South Laguna, and James O. Narey, Westminster, both of Calif., assignors to Associated Data Concepts, Costa Mesa, Calif.

Continuation-in-part of Ser. No. 546,696, Feb. 3, 1975. This application Dec. 3, 1975, Ser. No. 637,433

Int. Cl.² G09F *11/18*

U.S. Cl. 340—325 **4 Claims**

1. A sign module for forming a display of a set of alphanumeric characters one at a time in a viewing window, said module comprising: a set of display tapes, each tape being imprinted on both front and back surfaces at discrete surface segments along its length with a discrete character segment of one character, all character segments on the front surface of a given tape corresponding to the same relative part of the different characters, and all character segments on the back surface of a given tape corresponding to the same relative part of the different characters, the number of display tapes in the set being equal to one-half the number of character segments presented at a time in said viewing window, a driving roller and a slave roller for each tape connected with opposite ends of the respective tape and supporting the respective tape with one surface segment of each surface being displayed in said window at a portion of the window which is in positional correspondence with the character segment represented, the surface segments on both surfaces of each tape being progressively longer from one end of the tape to the other, the character segments being nonuniformly spaced along the length of

the tape whereby equal angular displacements of the driving roller causes successive character segments to be aligned with the respective window portions, the set of surface segments being displayed together in said window all bearing different character segments of the same character whereby an entire character is displayed, and means for displacing the driving rollers simultaneously through equal angles for displacing said tapes in unison along their length to successively present the character segments in registry with the respective window portions whereby the characters of said set are successively displayed, each of the driving rollers and each of the slave rollers being mounted upon a shaft, and means for displacing including a set of driving roller gears with each one of the

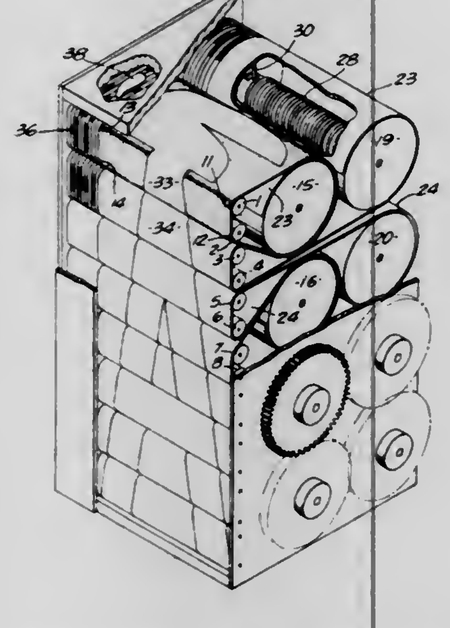

driving roller gears being connected with the shaft of a respective one of said driving rollers and a set of slave roller gears with each one of the slave roller gears being connected with the shaft of a respective one of said slave rollers, each of the driving roller gears engaging one other driving roller gear and engaging the slave roller gear of the same tape, and each of the slave roller gears engaging one of the other slave roller gears, and means for rotating one of the roller gears whereby all gears rotate only in unison, each of said slave rollers being provided with a spring drivingly connected between the roller and its respective shaft whereby the tape on each pair of driving and slave rollers is maintained in tension and differential rotation between a slave roller and its shaft is taken up by the respective spring.

4,064,504
DIGITAL CODING OF ANGLES
Marc Lepetit, Le Housseau Carquefou; Philippe Angelle, Thouare; Jacques Bodin, Corleveau Basse-Goulaine, and Dominique du Boisbaudry, Nantes, all of France, assignors to Societe d'Etudes, Recherches et Constructions Electroniques - SERCEL, Carquefou, France
Filed Mar. 26, 1975, Ser. No. 562,082
Claims priority, application France, Mar. 28, 1974, 74.10828; Mar. 14, 1975, 75.08045
Int. Cl.² G08C *9/06*
U.S. Cl. 340—347 P **13 Claims**

1. In a digital angle coder comprising:
first and second angle defining members which are relatively rotatable about a first axis of rotation and the angular shift of which is to be detected,
an auxiliary revolving member driven in continuous rotation at a substantially constant speed about a second axis of rotation substantially coinciding with said first axis of rotation,
a coding means and code-reading means arranged for cooperation between said angle defining members and said auxiliary rotating member, one of said coding and code-reading means being arranged on said auxiliary revolving member and the other of said coding and code reading means being arranged on each of said angle defining members, said coding means comprising at least one plurality of fine markings regularly spaced about the axis of rotation of the member carrying said coding means and at least one coarse marking, and said code-reading means is adapted to read said fine markings to provide repetitively first and second read fine marking signals relating to said first and second angle defining members, respectively, and is adapted to read said at least one coarse marking during each rotation of the member carrying the coding means to provide coarse marking signals,
fine angle detection means including means for producing time-shift signals corresponding to the time-shifts between each of the first read fine marking signals and the associated one of the second read fine marking signals,

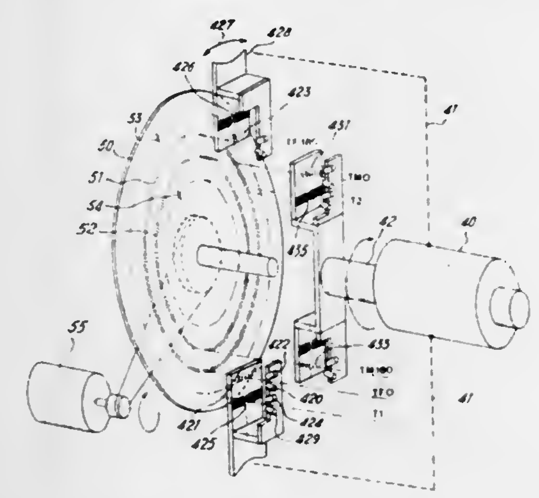

means for deriving from said time-shift signals a fine value signal representative of the angle between said first and second angle defining members,
coarse angle detection means responsive to successive coarse marking signals for producing a coarse value signal representative of the angle between said first and second angle defining members, and
means for combining said fine value and coarse value signals into a digitally coded representation of the angle between said first and second angle defining members,
the improvement of said means for deriving a fine value signal including means for averaging the time-shifts represented by said time-shift signals over one or more complete revolutions of said auxiliary revolving member, whereby the angle measurement is rendered very accurate by compensation of inequalities in the angular spacing of the markings.

4,064,505
SIGNAL TRANSMISSION CIRCUIT COMPRISING A CODER AND A DECODER
Nico Valentinus Franssen, Eindhoven, Netherlands, assignor to U.S. Philips Corporation, New York, N.Y.
Continuation of Ser. No. 288,105, Sept. 11, 1972, abandoned. This application June 17, 1975, Ser. No. 587,637
Claims priority, application Netherlands, Sept. 30, 1971, 7113389
Int. Cl.² H04M *1/19;* **H04K** *1/06*
U.S. Cl. 340—347 DD **2 Claims**

1. A signal transmission system comprising a coder, a decoder, means serially connecting the coder to the decoder, a separate delay circuit having a number of signal delay elements of substantially equal delay times arranged one after the other between taps in the encoder and decoder, the period of each delay being substantially greater than a period of the lowest frequency signal to be transmitted, at least two transmission circuits in the encoder and decoder for combining signals passing through the taps in the respective delay circuits thereof, a number of signal paths leading from an input of the coder through the taps and transmission circuits thereof to an output of the coder, a corresponding number of signal paths leading from an input of the decoder through the taps and transmission circuits thereof to an output of the decoder, which signal paths in both the encoder and decoder exhibit a sequence of transmission ratios in successive signal paths along the delay circuits hereinafter called transmission ratio code, the transmission ratio code being a ratio in accordance with bessel coefficients $J_k(x)$, each delay circuit having $2n$ delay elements while $k = 0$ for the signal path through the tap between the

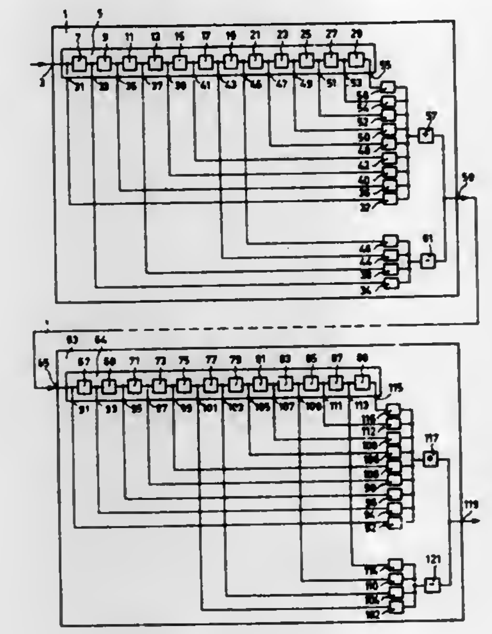

n^{th} and the $(n+1)^{th}$ delay element k is successively 1, 2 . . . n in the coder for the signal paths through the tap at the output of the $(n+1)^{th}$, $(n+2)^{th}$, . . . $2n^{th}$ element and k is successively -1, -2, . . . $-n$ for the signal paths through the taps at the input of the n^{th}, $(n-1)^{th}$, . . . 1^{st} element, the argument x of the said bessel coefficients being mutually equal while in the respective decoder the sequence of the indices k is the reverse of the sequence in the encoder and the arguments x are equal to those of the corresponding order.

4,064,506
CURRENT MIRROR AMPLIFIERS WITH PROGRAMMABLE CURRENT GAINS
James Murgen Cartwright, Jr., Cambria Heights, N.Y., assignor to RCA Corporation, New York, N.Y.
Filed Apr. 8, 1976, Ser. No. 675,207
Int. Cl.² H03K *13/02;* **H03F** *3/16*
U.S. Cl. 340—347 DA **13 Claims**

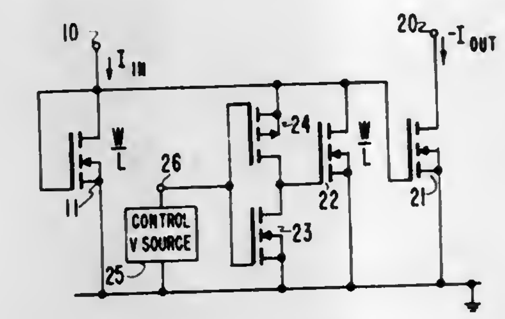

1. A programmable-gain current mirror amplifier comprising:
input, output and common terminals;
first master and first slave mirroring transistors, each having first and second electrodes with a principal conduction path therebetween and having a control electrode, the conductance of the principal conduction path of each transistor being controlled according to control potential between its second and control electrodes;
means connecting the first electrodes of said first master and said first slave mirroring transistors to said input terminal and to said output terminal, respectively;
a direct-coupled feedback connection from the first electrode of said first master mirroring transistor to its control electrode;
means connecting each of the second electrodes of said first master and said first slave mirroring transistors to said common terminal; and
switching means for selectively connecting together the control electrodes of said first master and said first slave mirroring transistors.

4,064,507
NOISE GENERATOR CIRCUIT FOR A SECURITY SYSTEM
Lawrence S. Schmitz, Pittsburgh, Pa., assignor to Westinghouse Electric Corporation, Pittsburgh, Pa.
Filed May 29, 1975, Ser. No. 582,552
Int. Cl.² G08B *3/00*
U.S. Cl. 340—384 E **8 Claims**

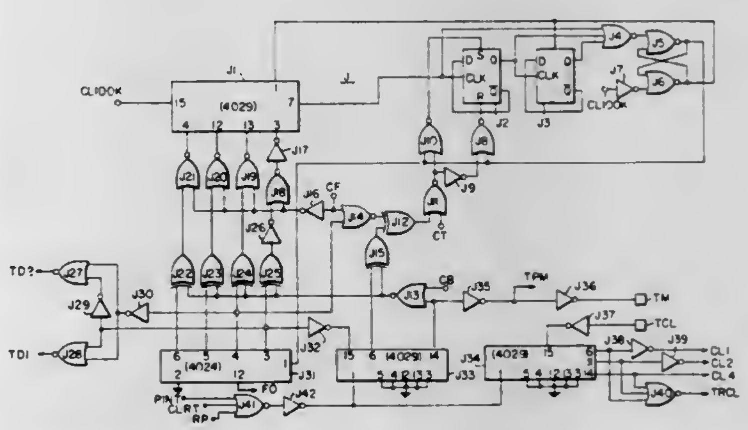

1. In a solid state security system having input circuits adapted to receive input signals from security sensors monitoring two or more alarm conditions and generating a separate digital output signal in response to the occurrence of each alarm condition, the combination of, a digital noise generator circuit means responsive to said digital output signal by initiating a digitally modulated, frequency modulated digital audio waveform uniquely indicative of the alarm condition represented by said digital output signal, each of said digitally modulated, frequency modulated digital audio waveforms conisting of a periodic repetition of a predetermined pattern of frequency versus time waveform segments, and audio means for audibly manifesting said frequency modulated digital audio waveform.

4,064,508
ALARM SYSTEM INCLUDING REMOTE SIGNALLING MEANS
Theodore Simon, Plainview, N.Y., assignor to Theodore Simon, Plainview and Barry Schweiger, Syosset, both of, N.Y.
Continuation-in-part of Ser. No. 615,833, Sept. 22, 1975, Pat. No. 3,978,466. This application Aug. 9, 1976, Ser. No. 712,970
Int. Cl.² G08B *13/08*
U.S. Cl. 340—409 **19 Claims**

1. In an alarm system including an alarm circuit and first and second alarm sensing means the states of which are changeable between a non-alarm condition and an alarm condition, the improvement comprising pulsing means connected to said first and second alarm sensing means for generating a substantially constant voltage, in said non-alarm condition of said first alarm sensing means and the alarm condition of said second alarm sensing means, and a pulsating voltage, in said alarm condition of said first alarm sensing means; switching means for enabling and disabling the alarm circuit and for providing higher and lower reference voltages as a function of the enabled and disabled conditions of the alarm circuit; indicating means connected between said pulsing and switching means and adapted to permit current flow in each of two opposite directions therethrough as a function of the relative voltages provided by both said pulsing and switching means across said indicating

means, said indicating means providing a different indication for each of the two directions of current flow therethrough and an indication for no current flow, whereby a total of five indications may be obtained by selective passage of currents

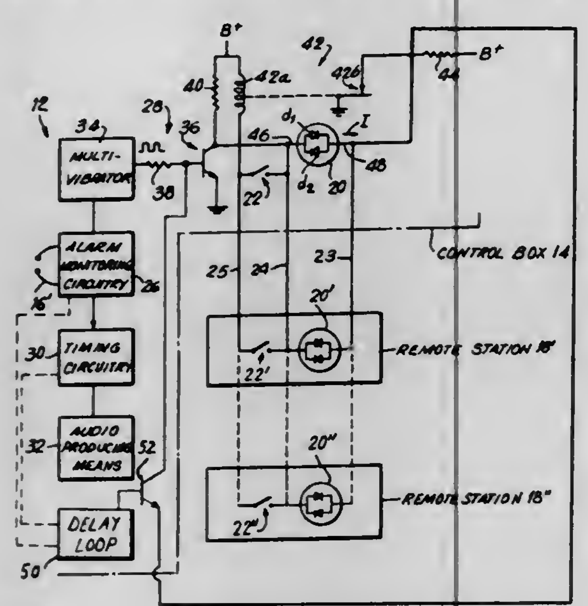

through said indicating means which currents may flow in one of said two opposing directions and which may be zero, constant or pulsed in each of said directions to thereby provide said indications in either constant or in pulsed form.

4,064,509
INTRUSION DETECTION SYSTEMS EMPLOYING AUTOMATIC SENSITIVITY ADJUSTMENTS
Roy Stockdale, Huntington, N.Y., assignor to Napco Security Systems, Inc., Copiague, N.Y.
Filed July 19, 1976, Ser. No. 706,210
Int. Cl.² G08B *13/18*
U.S. Cl. 340—411 **11 Claims**

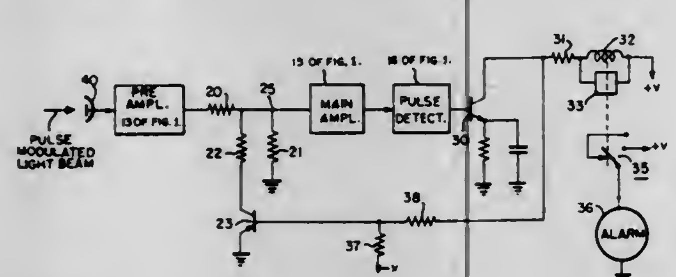

1. In a photo electric intrusion system of the type employing a transmitter capable of providing a beam of light for impingement on a photocell associated with a receiver, said receiver capable of providing an alarm condition when said light beam is interrupted during an intrusion operating mode, the improvement therewith of apparatus for reducing the sensitivity of said receiver when said light beam is not impinging upon said photocell, comprising:

a. attenuator means coupled to said photocell and capable of being switched in a first mode to provide a given attenuation to said photocell signal and a second mode for providing a lesser attenuation to said signal,

b. means coupled to said attenuator for switching the same into said first mode during the interruption of said light beam and into said second mode when said light beam impinges upon said photocell, whereby the sensitivity of said receiver is reduced during said first mode and increased during said second mode.

4,064,510
HIGH REPETITION FREQUENCY SIDE-LOOKING PULSE RADAR SYSTEM
Maurice Chabah, Paris, France, assignor to Thomson-CSF, Paris, France
Filed June 18, 1976, Ser. No. 697,738
Claims priority, application France, June 24, 1975, 75.19740
Int. Cl.² G01S *9/10, 9/22, 9/52*
U.S. Cl. 343—7.5 **4 Claims**

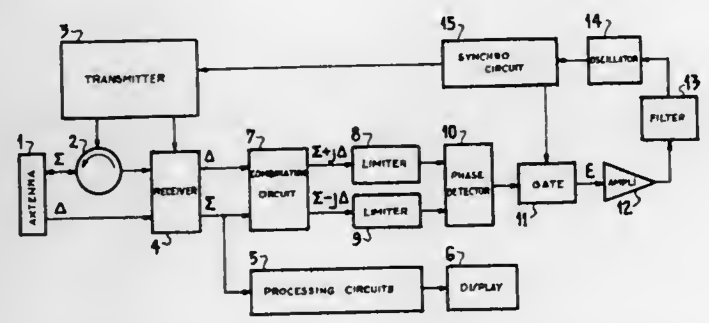

1. In a side-looking airborne pulse radar system, means for maintaining the direction of an echo received in the middle of each recurrence from a ground area observed by the radar system, substantially coincident with a predetermined axis, comprising:

angular measuring means responsive to the angular interval between said axis and the direction of received ground echos and to the pulse repetition frequency of the radar system for providing an output signal indicative of the amplitude and the sense of the angular inerval between said axis and the direction of the echo received in the middle of each recurrence; and

frequency controlled pulse repetition frequency generator means coupled to the output of said angular measuring means for controlling the pulse repetition frequency of said radar system so as to tend to reduce said angular interval to null.

4,064,511
CLUTTER SUBTRACTION SYSTEM
Serge Manfanovsky, Wayland, Mass., assignor to Raytheon Company, Lexington, Mass.
Filed Sept. 24, 1976, Ser. No. 726,345
Int. Cl.² G01S *7/02*
U.S. Cl. 343—7 A **4 Claims**

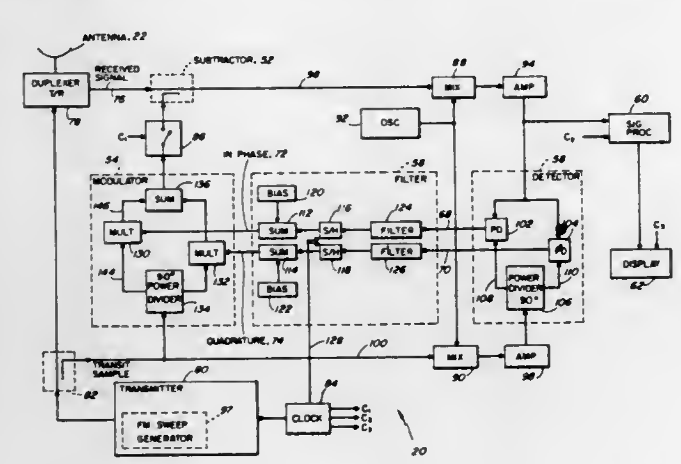

1. A system operative with a transmitted signal and a received signal, the system comprising:

means for modulating a sample of said transmitted signal to match a component of said received signal;

means coupled to said modulating means for combining said transmitted sample with said received signal; and

means coupled to said combining means for detecting a difference between said transmitted sample and said component of said received signal, said detecting means being coupled to said modulating means to provide a modulated signal of said modulating means which reacts with said received signal in said combining means to cancel said component of said received signal.

4,064,512
DATA RECORDING APPARATUS
Emmett L. Durrum, Menlo Park, Calif., assignor to Eldex Laboratories Incorporated, Menlo Park, Calif.
Filed July 15, 1976, Ser. No. 705,471
Int. Cl.² G01D *9/00, 15/24*
U.S. Cl. 346—33 R **5 Claims**

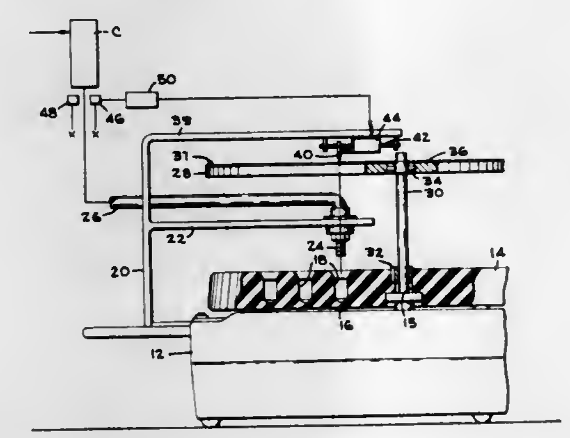

1. In a fraction collector of the type having a plurality of fraction receiving containers, means for supporting said containers along a prescribed path in a prescribed spatial arrangement, a nozzle for delivering a fractionated substance to said containers, and means for moving said nozzle relative said containers along said path, improved data recording apparatus comprising a carrier for supporting a data receiving sheet, an arm movable relative to said sheet supporting means in unison with said nozzle moving means so as to afford relative movement between said arm and said sheet supporting means that corresponds with the relative movement between said nozzle supporting means and said container supporting means, and means mounted on said arm for inscribing data on a sheet on said carrier, the inscribing means inscribing data that is indicative of a characteristic of the substance delivered by said nozzle so as to inscribe on a sheet carried by said carrier a graph bearing data spatially arranged in correspondence with the spatial arrangement of said containers on said path.

4,064,513
INK DROP CHARACTER LINE PRINTER WITH TRAVERSING ORIFICE BAND
Stephen F. Skala, 3839 S. Wenonah, Berwyn, Ill. 60402
Continuation-in-part of Ser. No. 605,993, Aug. 20, 1975, Pat. No. 3,971,040, and Ser. No. 605,992, Aug. 20, 1975, Pat. No. 3,972,053. This application May 28, 1976, Ser. No. 691,140
Int. Cl.² G01D *15/18, 9/00*
U.S. Cl. 346—75 **5 Claims**

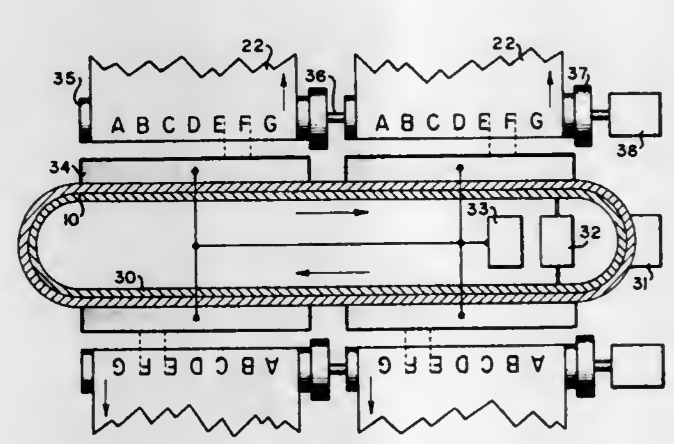

1. A method for printing characters by selectively depositing ink drops onto a receiving surface including the steps of

forming a plurality of ink drops in a plurality of uniformly spaced trajectoris, said ink drops selected for deposit on a receiving surface, said ink drops projecting toward said receiving surface, said trajectories moving in only one direction,

moving said receiving surface in a direction perpendicular to the direction of motion of the trajectories, and

deflecting ink drops in said trajectories commonly in a direction perpendicular to the motion of the trajectories, said deflection comprising a first deflection which deflects the ink drops to form successive columns of a character at the receiving surface and a second deflection added to the first deflection to deflect each of the drops at the receiving surface by a distance equal to the distance moved by the receiving surface from the time that printing of a character matrix would begin.

4,064,514
PORTABLE CAMERA
Robert W. Gundlach, Victor, N.Y., assignor to Xerox Corporation, Stamford, Conn.
Filed Jan. 6, 1975, Ser. No. 538,678
Int. Cl.² G03G *15/22, 15/00*
U.S. Cl. 354—3 **5 Claims**

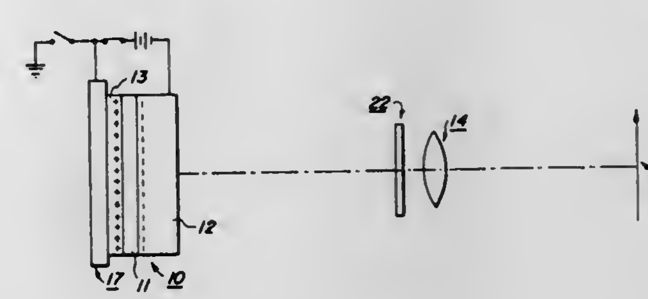

1. In a portable electrophotographic camera comprising:

a. a light tight housing;

b. an objective lens;

c. a leaky dielectric overcoated consumable photosensitive recording medium located within the light tight housing and disposed parallel to the image plane of the lens said medium comprising a conductive substrate, a photoconductive insulating layer of from about 15 to about 300 microns in thickness operatively disposed in relation to said substrate and a leaky dielectric overcoating layer, wherein the ratio of thickness of said overcoating layer to said photoconductive insulating layer is from about 0.1:1 to about 1:1;

d. means for admission and exclusion of image information from impinging upon the photosensitive recording medium; and

e. means for developing the image information recorded on said photosensitive member, the improvement comprising:

means for essentially liquid free contact charging the recording surface of the leaky dielectric overcoating of the photosensitive recording medium, the frequency of point contact of the charging means with the surface of the leaky dielectric overcoating being approximately three times the thickness of said overcoating or less.

4,064,515
ANALOG TO DIGITAL CONVERTER FOR A PLURALITY OF ANALOG CHANNELS
Yukio Mashimo, Tokyo; Nobuaki Sakurada, Yokohama; Tadashi Ito, Yokohama; Fumio Ito; Nobuhiko Shinoda, and Hiroyashu Murakami, both of Tokyo, all of Japan, assignors to Canon Kabushiki Kaisha, Tokyo, Japan
Filed Aug. 14, 1975, Ser. No. 604,532
Claims priority, application Japan, Aug. 30, 1974, 49-99687
Int. Cl.² G03B *7/08*
U.S. Cl. 354—23 D **1 Claim**

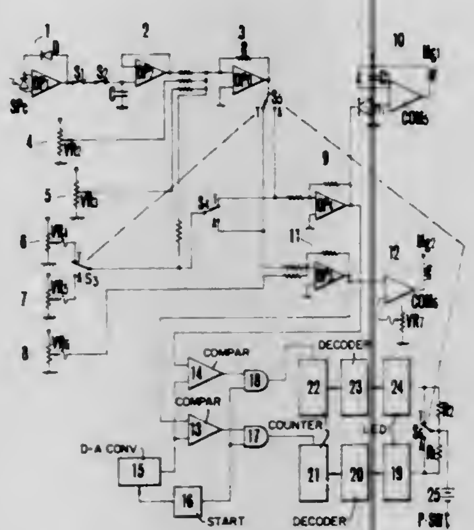

1. For a camera having a shutter and a diaphragm, a system for generating digital photographic information, comprising:
- a. a light measuring circuit for sensing the brightness of an object and forming an analog output corresponding to said brightness,
- b. an exposure factor setting means to set exposure factor information,
- c. an exposure factor signal forming circuit coupled to said setting means to form an analog output corresponding to the exposure factor value being set by the exposure factor setting means,
- d. an exposure computation circuit coupled to said light measuring circuit and to said exposure factor signal forming circuit to form an analog output corresponding to the object brightness based on the output of said light measuring circuit and the exposure factor information being set by said exposure factor setting means,
- e. a pulse generating means,
- f. a single reference signal generating means for forming an analog reference signal corresponding to the number of pulses generated by means of said pulse generating means,
- g. a first comparison circuit having one input terminal connected to the output terminal of said reference signal generating means and another input terminal connected to the output terminal of said exposure computation circuit, so as to generate an output when both input values have a prescribed relationship,
- h. a second comparison circuit having an input terminal connected to the output terminal of said reference signal generating means and another input terminal connected to said exposure factor signal forming circuit so as to generate an output when said both input values have a prescribed relationship,
- i. a first gate means connected to said pulse generating means and the output terminal of said first comparison circuit and turned off in response to the output of said first comparison circuit,
- j. a second gate means connected to said pulse generating means and the output terminal of said second comparison circuit and turned off in response to the output of said second comparison circuit,
- k. a first counter means connected to said first gate means,
- l. a second counter means connected to said second gate means,
- m. a first indication means connected to said first counter means to indicate the content of said counter, and
- n. a second indication means connected to said second counter means to indicate the content of said counter,

said exposure factor setting means including a shutter time information setting means and a diaphragm aperture information setting means and a mode selection means for selecting a shutter preference mode and a diaphragm preference mode for introducing the shutter time into said exposure computation circuit when the shutter preference mode is selected and for introducing diaphragm data into said exposure computation circuit when the diaphragm aperture preference mode is selected, said exposure factor setting means forming an analog output corresponding to shutter time information when the shutter preference mode is selected and exposure factor forming means forming an analog output corresponding to the diaphragm aperture when the diaphragm preference mode is selected.

4,064,516
REFLEX CAMERA LIGHT DETECTING ARRANGEMENT
Thomas D. McLaughlin, Thousand Oaks, and Richard M. Altman, Woodland Hills, both of Calif., assignors to Optigon Research & Development Corporation, Santa Monica, Calif.
Filed Mar. 10, 1976, Ser. No. 665,557
Int. Cl.² G03B *13/02*
U.S. Cl. 354—31 **14 Claims**

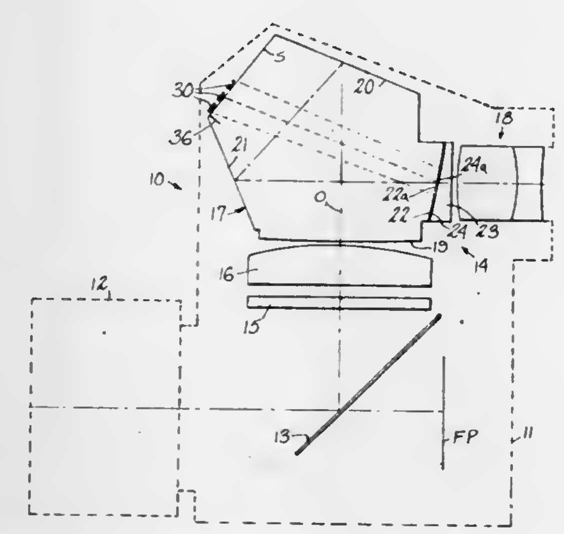

1. In a camera of the reflex type which has an optical path including a mirror adapted to reflect light from a lens to a focusing screen to produce an image formed by the lens thereon, a system for viewing the image on the screen comprising a pentaprism having light entrance and exit surfaces with first and second reflecting surfaces therebetween on said optical path, said prism having a planar third surface not on said optical path extending between said reflecting surfaces, and an eyepiece lens on said optical path behind said exit surface, said eyepiece lens having elements defined by front and rear surfaces, the improvement comprising; means defining a partial light reflecting surface at one of said exit surface and an eyepiece element surface in said optical path, said partially reflecting surface angled from the perpendicular to said optical path to reflect an image of said focusing screen to said third surface on said prism, and light detecting means located adjacent the third surface at the position of the image reflected thereto by said partially reflecting surface.

4,064,517
PHOTOMETRIC APPARATUS FOR SINGLE LENS REFLEX CAMERA
Yoshihisa Maitani; Kunio Shimoyama; Muneaki Yoshida; Akihiko Hashimoto, and Masahiro Kitagawa, all of Hachioji, Japan, assignors to Olympus Optical Co., Ltd., Tokyo, Japan
Division of Ser. No. 505,956, Sept. 13, 1974, Pat. No. 3,994,001. This application Aug. 24, 1976, Ser. No. 717,088
Claims priority, application Japan, July 2, 1974, 49-75694
Int. Cl.² G03B *7/08, 17/20*
U.S. Cl. 354—51 **10 Claims**

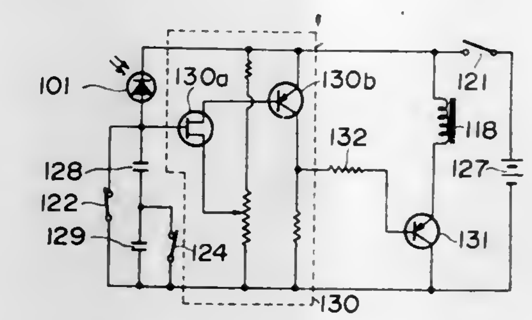

1. In a photographic camera of the type which includes an objective lens, a first shutter blind for initiating exposure of a light sensitive film and having a light reflecting surface facing said objective lens, and a second shutter blind for terminating said exposure, an electronic timing circuit comprising:
- a photoelectric transducer element mounted in said camera at a location which permits said transducer element to receive light reflected from said first shutter blind light reflecting surface and/or said film;
- a capacitive network;
- first means cooperating with said transducer element for causing a charging current to flow though said capacitive network in response to the initiation of a shutter release operation, said charging current being a function of the amount of light received by said transducer element whereby the charge across said capacitive network changes as a function of both said charging current and the effective time constant of said capacitive network;
- said capacitive network including second means responsive to movement of said first shutter blind across said film for modifying the effective time constant of said capacitive network an amount sufficient to compensate for changes in the magnitude of said charging current resulting from differences in the coefficients of reflectivity of said first shutter blind reflective surface and said film.

4,064,518
COMPACT SELF-DEVELOPING CAMERA WITH FOLDED OPTICAL IMAGE PATH
Lawrence M. Douglas, South Easton, Mass., assignor to Polaroid Corporation, Cambridge, Mass.
Filed Sept. 2, 1976, Ser. No. 720,054
Int. Cl.² G03B *17/50, 15/00*
U.S. Cl. 354—86 **17 Claims**

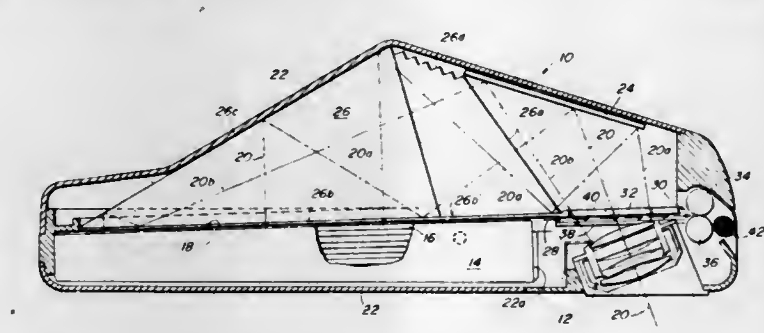

1. A camera of the self-developing type having a multiply-folded optical image path extending between a taking lens and an image surface at which a film unit is located for exposure, and in which each film unit advances separately from other film units, said camera having the improvement comprising
- A. means for guiding an exposed film unit from the image surface to a film-processing location along a film advance path which traverses therebetween said folded optical path, and
- B. processing means at said processing location for receiving an exposed film unit advanced along said film path and for processing it to initiate production of a visible image thereon.

4,064,519
REGULATED STROBE FOR CAMERA WITH SIXTH FLASH INHIBIT
Richard C. Kee, Chestnut Hill, Mass., assignor to Polaroid Corporation, Cambridge, Mass.
Filed Aug. 2, 1976, Ser. No. 710,857
Int. Cl.² G03B *15/03*
U.S. Cl. 354—141 **5 Claims**

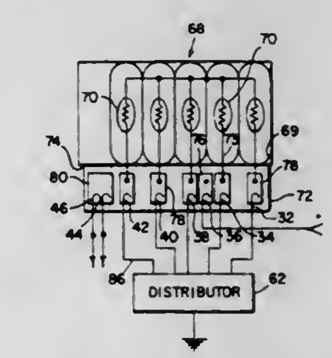

1. An electronic flash accessory for a camera of the type having a flash socket adapted for receipt of at least one conventional flash bulb together with means for sensing the terminals of the flash socket which are adapted to connect to the flash bulb to provide a signal which operates to inhibit camera operation when the impedance of the flash bulb is substantially different from the impedance of an unfired non-defunct flash bulb and means for providing a trigger signal, said flash accessory comprising:
- a housing;
- a storage capacitor;
- a discharge tube;
- means responsive to an applied voltage for charging said capacitor;
- means responsive to the trigger signal for discharging said capacitor through said discharge tube to produce an illuminating flash of light;
- connector means for electrically connecting said discharging means to the camera flash socket, said connector means terminating in at least two terminal elements configured to connect respectively to those terminals of the flash socket which are adapted to connect to the flash bulb, said terminal elements thereby accommodating receipt of the trigger signal from the camera; and
- means normally operative for providing an impedance characteristic across said connector means terminal elements substantially different from the impedance of an unfired non-defunct flash bulb thereby inhibiting camera operation upon connection of said discharging means to the camera socket, said impedance providing means being responsive to a predetermined event relative to the readying of said flash accessory in exception of the commencement of a photographic exposure cycle involving an artificially illuminated subject, for simulating the impedance of an unfired non-defunct flash bulb across said connector means terminal elements thereby enabling the camera to perform a photographic exposure cycle involving an artificially illuminated subject upon actuation by the camera operator.

4,064,520
STILL PHOTOGRAPHIC OR MOVIE CAMERA
Otto Freudenschuss; Eduard Keznickl, both of Vienna, and Robert Scheiber, Wiener Neudorf, all of Austria, assignors to Karl Vockenhuber and Raimund Hauser, both of Vienna, Austria
Filed Apr. 28, 1975, Ser. No. 572,331
Claims priority, application Austria, May 7, 1974, 3750/74
Int. Cl.[2] G03B *3/00*
U.S. Cl. 354—196 23 Claims

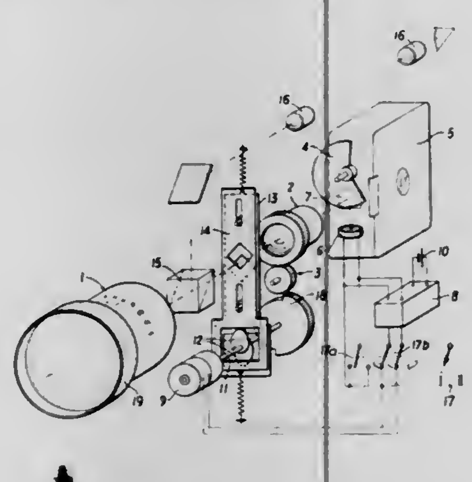

1. A camera comprising
an objective consisting of a forward lens unit and a base objective having fixed focal length, said forward lens unit having displaceable lens means for varying the focal length of said objective, said objective defining an image plane,
a film plane and an aperture diaphragm arranged between said lens means and said film plane,
said camera further comprising means automatically shifting said image plane for defining a substantially constant circle of diffusion at said film plane when imaging an object with different focal length settings and openings of the aperture diaphragm,
said means comprising drive means for displacing said base objective substantially in direct proportion to the diaphragm stop k=f/d of the aperture diaphragm in an axial direction, where f designates the focal length of the objective and d denotes the diameter of the entrance pupil.

4,064,521
SEMICONDUCTOR DEVICE HAVING A BODY OF AMORPHOUS SILICON
David Emil Carlson, Yardley, Pa., assignor to RCA Corporation, New York, N.Y.
Continuation-in-part of Ser. No. 659,268, Feb. 19, 1976, which is a continuation-in-part of Ser. No. 599,588, July 28, 1975, abandoned. This application July 30, 1976, Ser. No. 710,183
Int. Cl.[2] H01L *45/00*
U.S. Cl. 357—2 19 Claims

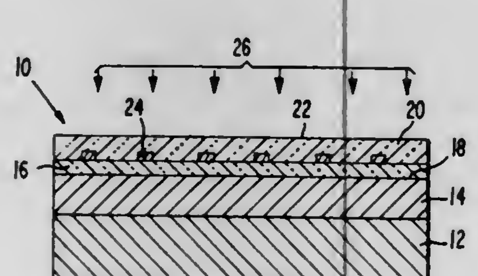

1. A semiconductor device comprising:
a body of amorphous silicon fabricated by a glow discharge in silane; and
a metallic region on a surface of said body providing a surface barrier junction at the interface of said metallic region and said body which is capable of generating a space charge region in said body.

4,064,522
HIGH EFFICIENCY SELENIUM HETEROJUNCTION SOLAR CELLS
Robert F. Shaw, Chatham, and Amal K. Ghosh, New Providence, both of N.J., assignors to Exxon Research & Engineering Co., Linden, N.J.
Filed Feb. 4, 1976, Ser. No. 655,079
Int. Cl.[2] H01L *29/161, 27/14*
U.S. Cl. 357—16 8 Claims

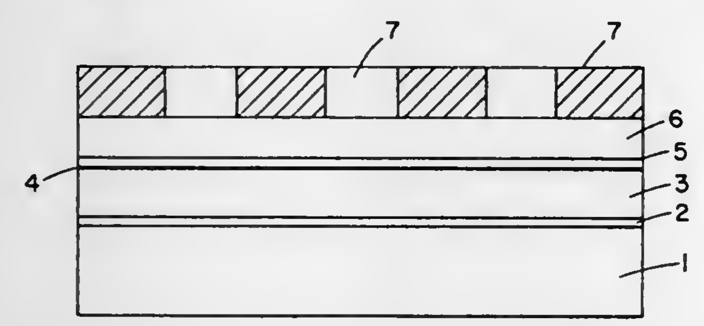

1. A photovoltaic device which comprises a metallic base electrode; a continuous, crystalline P-type semiconductive selenium layer; a thin tellurium layer interposed between the base electrode and the selenium layer to provide a metallurgical bond between the base electrode and the selenium layer and to provide an ohmic contact therebetween; a thin N-type semiconductive cadmium selenide layer contiguous with the selenium layer and forming a photovoltaic heterojunction therebetween; a pellucid layer of cadmium oxide contiguous with the cadmium selenide layer and forming an ohmic contact therebetween and a metallic current collecting electrode on the cadmium chalcogenide layer.

4,064,523
HIGH-VOLTAGE BIPOLAR TRANSISTOR FOR INTEGRATED CIRCUITS
Arnold London, Tempe, Ariz., assignor to Motorola, Inc., Chicago, Ill.
Filed Mar. 3, 1976, Ser. No. 663,406
Int. Cl.[2] H01L *29/06*
U.S. Cl. 357—20 5 Claims

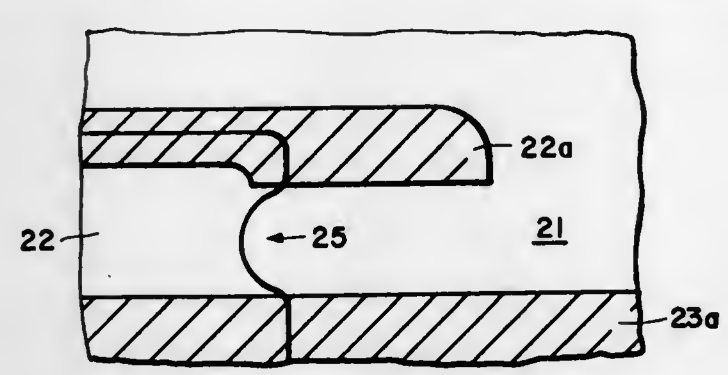

1. A high-voltage semiconductor device comprising:
a semiconductor body having a surface;
a first region of one conductivity type at said surface;
a second region of second conductivity type surrounding said first region to form a PN junction at said surface, said second region having a higher resistivity than said first region at said surface;
an insulator covering said PN junction and extending over said second region;
at least two closely-spaced conductive means on said insulator over first and second portions, respectively, of said junction and extending over said second region; and
at least a third portion of said junction between said closely-spaced conductive means; said third portion of said junction being convex away from said second region.

4,064,524
TWO-PHASE CHARGE TRANSFER DEVICE IMAGE SENSOR
Yoshiaki Hagiwara, Yokohama, and Hiroshi Yamazaki, Ebina, both of Japan, assignors to Sony Corporation, Tokyo, Japan
Filed July 9, 1976, Ser. No. 703,792
Claims priority, application Japan, July 31, 1975, 50-93746
Int. Cl.[2] H01L *29/78, 27/14, 31/00;* H01J *39/12*
U.S. Cl. 357—24 7 Claims

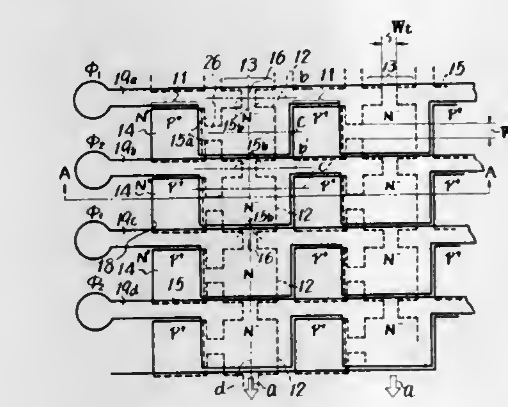

1. A two phase charge transfer device comprising a semiconductor substrate, an insulation layer of uniform thickness formed on said substrate, a shift register having a plurality of cells formed in said substrate, an input to said shift register and an output to said shift register between which charges flow, a plurality of aligned electrodes formed over said cells on said insulation layer and means for applying two phase clock signals to said aligned electrodes to form potential wells in said cells and to shift said charges, each of said cells comprising a transfer region and a storage region, a transfer region of a cell being located between a storage region of said cell and said input, each of said cells formed of said transfer and storage regions of said substrate having a first impurity concentration of one conductivity type and channel stopper regions having a higher second impurity concentration of said one conductivity type with the regions of said substrate forming said storage regions being defined by regions of said first impurity concentration bordered in a direction transverse to the charge flow direction by channel stopper regions of said second impurity concentration, and said transfer regions being defined by regions of said first impurity concentration which are narrower in said transverse direction than said regions of first impurity concentration in said storage regions and said regions of said first impurity concentration in said transfer regions being bordered in said transverse direction by channel stopper regions of said second impurity concentration higher than said first impurity concentration to form asymmetrical potential wells in said cells, the surface potential in a storage region of a cell being deeper than that in a transfer region of said cell.

4,064,525
NEGATIVE-RESISTANCE SEMICONDUCTOR DEVICE
Gota Kano, Nagaoka-kyo; Naoyuki Tsuda, Kyoto, and Hitoo Iwasa, Takatsuki, all of Japan, assignors to Matsushita Electric Industrial Co., Ltd., Kadoma, Japan
Continuation of Ser. No. 498,212, Aug. 16, 1974, abandoned. This application June 15, 1976, Ser. No. 696,389
Claims priority, application Japan, Aug. 20, 1973, 48-93568; Aug. 30, 1973, 48-97984
Int. Cl.[2] H01L *27/02*
U.S. Cl. 357—42 5 Claims

1. A negative-resistance semiconductor device comprising:
a semiconductor substrate region of a specified conductivity type,
a pair of defined regions having the conductivity type opposite to that of said substrate region, and defined by p-n junctions from the substrate region,
a first field-effect transistor of a surface inversion channel type to be operated in a depletion mode, made in one of said defined regions, and having a channel region consisting of a surface inversion layer,
a second field-effect transistor of junction gate type to be operated in a depletion mode, and made in the other of said defined regions, and having a channel region consisting of said other defined region itself as the channel of opposite conductivity type to that of said inversion layer,

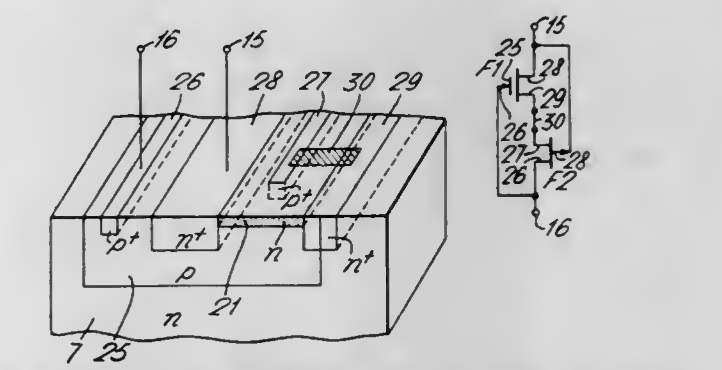

the first and the second field-effect transistors being in complementary relation to each other, said transistors having gate, source and drain electrodes, and
one of the source and drain electrodes of a first one of the complementary field-effect transistors being connected to one of the source and drain electrodes of a second one of the complementary field-effect transistors,
the other electrode of said source and drain electrodes of the first one being connected to the gate of the second one,
the other electrode of said source and drain electrodes of the second one being connected to the gate of the first one.

4,064,526
I.I.L. WITH GRADED BASE INVERSELY OPERATED TRANSISTOR
Yukuya Tokumaru; Masanori Nakai; Satoshi Shinozaki; Junichi Nakamura; Shintaro Ito, and Yoshio Nishi, all of Yokohama, Japan, assignors to Tokyo Shibaura Electric Co., Ltd., Tokyo, Japan
Filed Dec. 24, 1975, Ser. No. 644,048
Claims priority, application Japan, Dec. 27, 1974, 49-148567
Int. Cl.[2] H01L *27/04, 29/72, 29/36*
U.S. Cl. 357—46 7 Claims

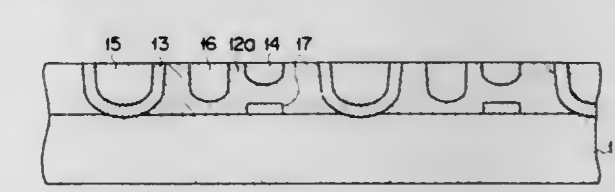

1. An integrated injection logic semiconductor device comprising a semiconductor substrate of one conductivity type, a semiconductor layer of the opposite conductivity type laminated on said one conductivity type semiconductor substrate and having a lower impurity concentration than said semiconductor substrate, a first one conductivity type region formed in a manner penetrating through said opposite conductivity type semiconductor layer to reach said one conductivity type semiconductor substrate, a first opposite conductivity type region formed in said first one conductivity type region, at least one second one conductivity type region formed in said opposite conductivity type layer, and a second opposite conductivity type region formed beneath said second one conductivity type region only and connected to said one conductivity type semiconductor substrate, said second opposite conductivity type region having an impurity concentration sharply declining adjacent said substrate and decreasing toward said second one conductivity type region, the peak value of said impurity concentration being higher than that of the semiconductor layer of

opposite conductivity type and lower than that of the substrate, whereby a lateral transistor is constituted by said first opposite conductivity type region, said first one conductivity type region, and said opposite conductivity type semiconductor layer and a vertical transistor is constituted by said one conductivity type semiconductor substrate, said opposite conductivity type semiconductor layer plus said second opposite conductivity type region for providing an accelerating electric field to improve transport efficiency, and said second one conductivity type region.

4,064,527
INTEGRATED CIRCUIT HAVING A BURIED LOAD DEVICE
John S. Shier, Sunnyvale, Calif., assignor to Intersil, Inc., Cupertino, Calif.
Filed Sept. 20, 1976, Ser. No. 724,851
Int. Cl.[2] H01L *27/02, 27/04, 27/12*
U.S. Cl. 357—48 **11 Claims**

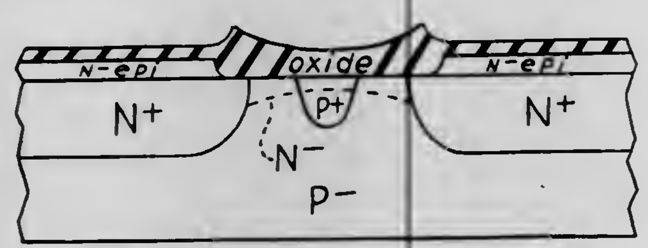

1. An improved integrated circuit comprising
at least first and second substantially doped diffused regions of the same first conductivity type disposed in spaced relation in a substrate of a second conductivity type and separate epitaxial layers of first conductivity type disposed one atop each of said diffused regions,
an elongated diffused substantially doped region of second conductivity type disposed between said first and second regions and having at least one lateral opening therethrough between said first and second regions,
an oxide layer dividing said epitaxial layers between said first and second regions over said elongated region, and
a channel of lightly doped first conductivity type extending from said first and second regions toward each other beneath said oxide layer at the upper surface of said first and second regions at said elongated region and connecting said first and second regions at said lateral opening in said elongated regions as a high resistance buried connection between said first and second regions.

4,064,528
METHOD AND APPARATUS FOR ENHANCING A TELEVISED OBJECT
William R. Bowerman, 1824 Mississippi St., Lawrence, Kans. 66044
Continuation-in-part of Ser. No. 256,876, May 25, 1972, Pat. No. 3,840,699. This application Oct. 7, 1974, Ser. No. 512,959
Int. Cl.[2] H04N *9/535, 7/18*
U.S. Cl. 358—22 **14 Claims**

1. A method of enhancing a televised object comprising the steps of:
a. treating the object to make the same spectrally unique in a natural environment in order to provide a radiating spectral code;
b. scanning said natural environment including said object with television camera means sensitive to both said environment and said spectral code to form an electrical image of the environment and of the shape and position of the spectral code in the environment;
c. signal processing said image to detect the position of the spectral code;
d. electronically generating a representation of the object independent of the shape of the object detected by said scanning,
e. substituting said representation in the position where the spectral code has been detected; and

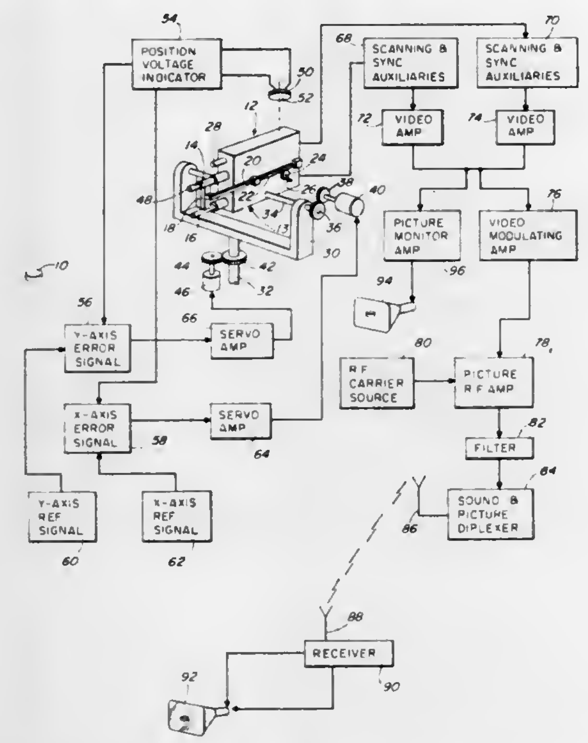

f. displaying concurrently said image of the environment and said representation of the object on an output screen.

4,064,529
APPARATUS FOR AUTOMATIC COLOR BALANCING OF COLOR TELEVISION SIGNALS
Harold George Seer, Jr., Woodbury, N.J., assignor to RCA Corporation, New York, N.Y.
Filed July 19, 1976, Ser. No. 706,451
Int. Cl.[2] H04N *9/04*
U.S. Cl. 358—29 **6 Claims**

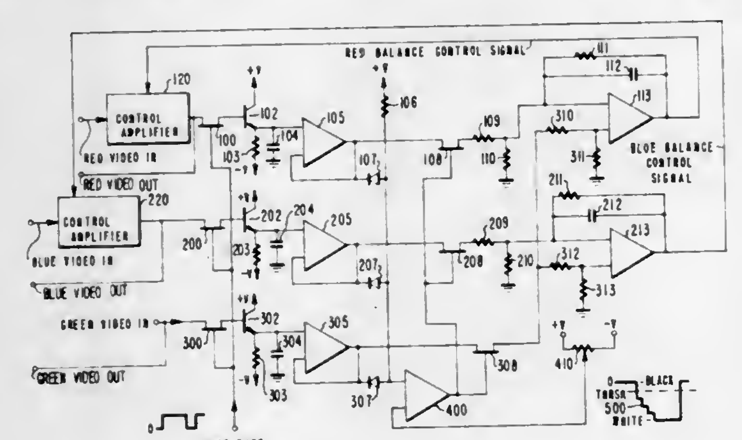

1. Automatic color balancing apparatus comprising:
means providing separate signal translating channels for two different color representative video signals of the same scene;
level control means responsive to a control signal included in one of said signal translating channels;
means coupled to said signal translating channels for storing the signal amplitude levels of said two signals;
threshold means coupled to said means for storing for determining when said two stored signals exceed a predetermined threshold;
means coupled to said storage means, said threshold means and to said signal translating channels for developing a control signal representative of the differential amplitude between said two signals when said two signals exceed said predetermined threshold; and
means for applying said control signal to said level control means for altering the level of said one signal translating channel in a direction so as to make the level of said two signals equal.

4,064,530
NOISE REDUCTION SYSTEM FOR COLOR TELEVISION
Arthur Kaiser, Trumbull; James Kenneth Moore, Springdale, both of Conn., and William E. Glenn, Jr., Fort Lauderdale, Fla., assignors to CBS Inc., New York, N.Y.
Filed Nov. 10, 1976, Ser. No. 740,576
Int. Cl.[2] H04N *9/535, 5/21*
U.S. Cl. 358—36 **11 Claims**

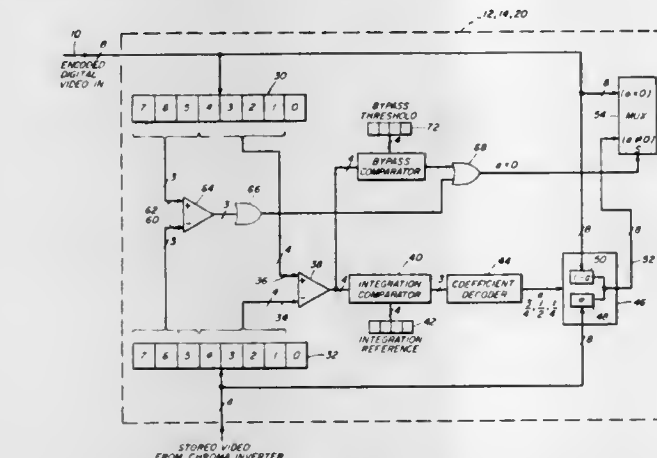

1. A noise-reducing system for reducing noise contained in television video signals arriving on an input line, said system comprising:
summing means having first and second input terminals for adding first and second signals respectively applied thereto to produce a sum signal,
means for coupling a first controllable fractional amplitude portion of the arriving video signal to the first input terminal of said summing means,
delay means connected to receive a sum signal from said summing means and for delaying said sum signal for a period substantially equal to the period of one television frame,
coupling means including means for coupling a second controllable fractional amplitude portion of the delayed signal from said delay means to the second input terminal of said summing means, and
means for controlling in unison said first and second fractional amplitude portions as a function of motion between the video signal arriving on said input line and the delayed signal and for maintaining the sum of said first and second fractional amplitude portions equal to unity,
whereby said summing means combines a fractional amplitude portion of each arriving television frame with a fractional amplitude portion of the sum of portions of preceding delayed frames to obtain an averaged noise-reduced video signal of an amplitude equivalent to that of the arriving video signal.

4,064,531
PROCESS AND CIRCUIT FOR DECODING THE OUTPUT SIGNAL OF A CAMERA TUBE IN A SINGLE-TUBE COLOR TELEVISION CAMERA
Michael Koubek, Munich, Germany, assignor to Siemens Aktiengesellschaft, Berlin & Munich, Germany
Filed Apr. 13, 1976, Ser. No. 676,617
Claims priority, application Germany, Apr. 24, 1975, 2518247
Int. Cl.[2] H04N *9/07, 5/14*
U.S. Cl. 358—44 **4 Claims**

4. A circuit arrangement comprising:
a. means including a low-pass filter and a high-pass filter for dividing the entire frequency spectrum of the output signal of a camera tube into a low frequency signal and a high frequency signal including the color carrier frequency signals;
b. means for deriving a high frequency luminance signal from the high frequency component of the output signal of said camera;
c. means for deriving a poorly defined luminance signal from an undelayed, a singly delayed and a twice delayed signal by multiplying these signals with factors of ($\sqrt{2}$), (+2), and ($\sqrt{2}$), respectively, and adding them in the output circuit of said low-pass filter;

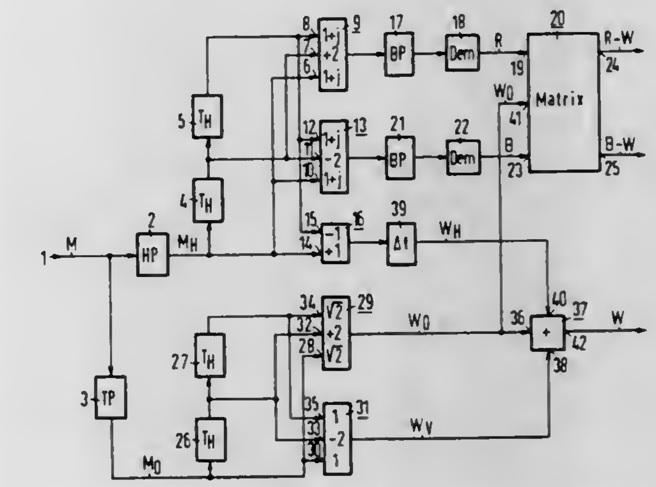

d. means for deriving a vertical luminance signal from an undelayed, a singly delayed and a twice delayed signal by multiplying these signals with factors of (1), (−2), and (1), respectively, and adding them in the output circuit of said low-pass filter; and
e. means for adding said high frequency luminance signal, said poorly defined luminance signal, and said vertical luminance signal to provide a sharply defined luminance signal.

4,064,532
SOLID STATE COLOR CAMERA
Seisuke Yamanaka, Mitaka, Japan, assignor to Sony Corporation, Tokyo, Japan
Filed Sept. 15, 1975, Ser. No. 613,519
Claims priority, application Japan, Sept. 18, 1974, 49-107499; Dec. 26, 1974, 49-2602
Int. Cl.[2] H04N *9/07*
U.S. Cl. 358—44 **11 Claims**

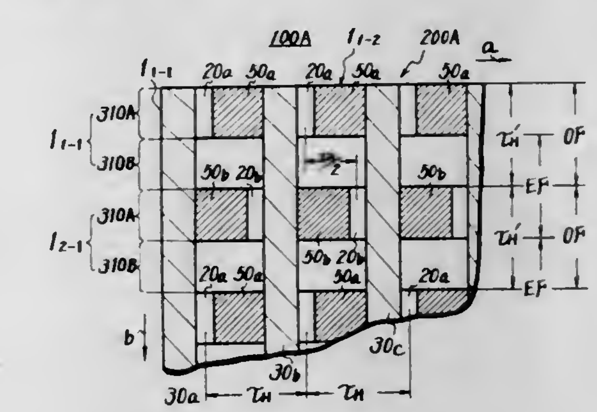

1. A solid state color camera comprising:
a solid state image sensing body having a plurality of picture elements aligned in both horizontal and vertical directions, each of said picture elements being composed of a plurality of sensing units aligned in the vertical direction;
first read-out means for reading out during a first field interval first image signals corresponding to said picture elements;
second read-out means for reading out during a second field interval second image signals corresponding to picture element areas which are composed of lower halves of said first named picture elements on alternate lines and upper halves of said first named picture elements on the lines between said alternate lines;
color filter means disposed in a light path of an image object

to be projected on said solid state image sensing body, and said color filter means being arranged such that output signals from said first and second read-out means can be decoded to obtain various color signal components; and said color filter means is so arranged that color signal components in image signals obtained from adjacent scanning lines in respective fields have a phase relationship of 180°.

11. A color coding filter for use with an imaging device for converting light into electrical signals using multiple-field format, the imaging device having a sensing surface divided into a rectilinear array of cells distinctive for each field with the cells defining a grid pattern in each field and the cell boundaries in successive fields being vertically displaced by 1/2 the vertical alignment pitch to form overlapping grid pattern in succesive fields, said filter comprising a plurality of rectilinear zones which are arranged in positions corresponding to the cell array of the sensing surface so that a light image falling on the sensing surface passes through said filter, said filter having the first, fifth and ninth rows of said rectilinear zones being red, green, blue, the third, seventh and eleventh rows being blue, red, green and the remainder white.

4,064,533

CCD FOCAL PLANE PROCESSOR FOR MOVING TARGET IMAGING

Donald Ross Lampe, Ellicott City, and Marvin Hart White, Laurel, both of Md., assignors to Westinghouse Electric Corporation, Pittsburgh, Pa.

Filed Oct. 24, 1975, Ser. No. 625,702

Int. Cl.² H04N *7/18, 5/33;* **H01L** *31/119*

U.S. Cl. 358—105 **10 Claims**

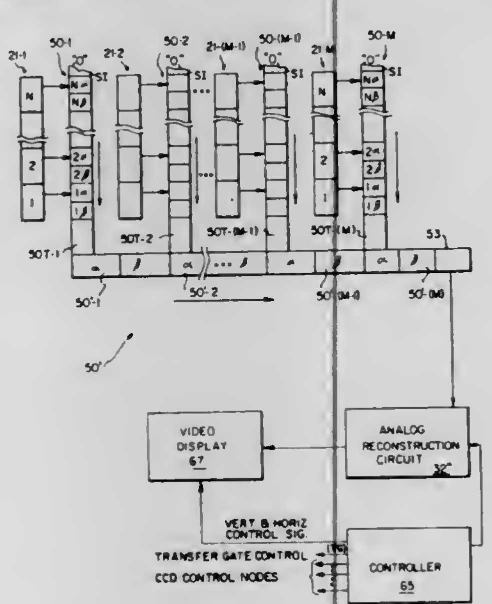

7. A processor for moving target imaging of a sensed scene comprising at least one elemental area, and including:

a charge transfer device including at least two stages, a first of said stages having an injector;

sensor means connected to said injector corresponding to said at least one elemental area for producing an output signal in proportion to the information content of said elemental area of the sensed scene, a change of information content in said elemental area indicating movement in the sensed scene,

control means for selectively producing clocking signals to advance charge packets through said at least two pair-related stages in succession and for supplying control signals to said injector to enable injection of a charge packet into the the first of said related pair of stages, said control means being selectively rendered operable to initiate said first sampling of said sensor output by enabling said injector to develop a charge packet corresponding to the level of that said first sample of said sensor output, said control means producing control signals for said injector and a first sequence of clocking signals for said first of said pair-related stages to enable the injection of said first charge packet by said injector means into said first associated stage, and

said control means being selectively operable to generate a second sequence of said control signals upon initiating a second sampling of said sensor output to cause said injector to inject a corresponding second charge packet into said associated first stage while propagating said first charge packet to said second stage of said associated pair, and thereafter to generate said clocking signals at a predetermined shift cycle rate to propagate said first and second charge packets through said successive stages.

4,064,534

SYSTEM FOR MONITORING THE PRODUCTION OF ITEMS WHICH ARE INITIALLY DIFFICULT TO PHYSICALLY INSPECT

Tung Chang Chen, Villanova, and Thomas M. Chen, Doylestown, both of Pa., assignors to Leone International Sales Corporation, Bridgeton, N.J.

Filed Apr. 20, 1976, Ser. No. 678,467

Int. Cl.² 250 *565;* **H04N** *7/18*

U.S. Cl. 358—107 **10 Claims**

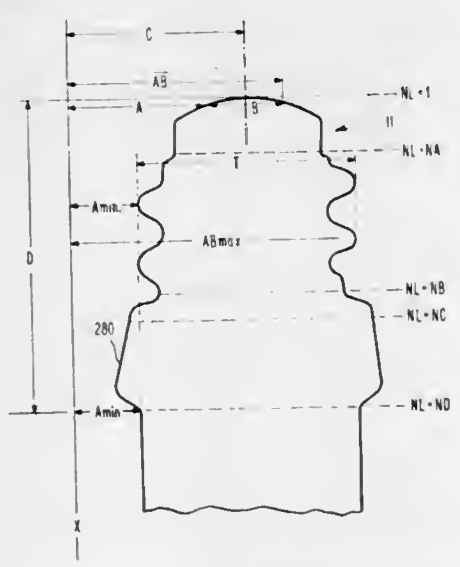

1. A system for monitoring three dimensions of an item which is being fabricated and which has an irregular shape including a plurality of critical width dimensions and critical length dimensions and requiring a particular depth characteristic and which item is initially difficult to physically inspect comprising in combination: means to effect an image of said item which image can be seen and recorded by a TV camera means; TV camera means disposed to see and temporarily record each of said item images whereby each of said item images can be scanned to translate said recorded images into electronic signals related thereto; first electronic circuitry means connected to said TV camera means to receive said electronic signals and in response thereto to generate first signals representing different width dimensions of said item image; second electronic circuitry means connected to said TV camera means to receive said electronic signals and in response thereto to generate second signals representing different lengths of said item image; third electronic circuitry means connected to receive said first and second signals and to perform arithmetic operations thereon to generate third signals representing said particular depth characteristic and to generate fourth signals representing critical width dimensions of said item and to generate fifth signals representing critical length dimensions of said item; fourth electronic circuitry means into which electronic signals can be stored to represent a standard item image, said fourth electronic circuitry means being formed to provide sixth signals representing critical width dimensions and critical length dimensions of said standard item image; fifth electronic circuitry means connected to said third and fourth electronic circuitry to monitor said particular depth characteristic signal for detection of an error thereof and to compare said fourth and fifth signals with said sixth signals to detect an error therebetween, whereby said item is either rejected or accepted as an approved item.

4,064,535

METHOD AND APPARATUS FOR EFFECTING MULTIPLE SPECTRAL WAVELENGTH IMAGING WITH INFRARED TELEVISION

Edward F. Cross, Los Angeles; Munson A. Kwok, Santa Monica, and Daniel C. Jonuska, Frazier Park, all of Calif., assignors to The United States of America as represented by the Secretary of the Air Force, Washington, D.C.

Filed July 19, 1976, Ser. No. 706,321

Int. Cl.² H04N *5/33*

U.S. Cl. 358—113 **2 Claims**

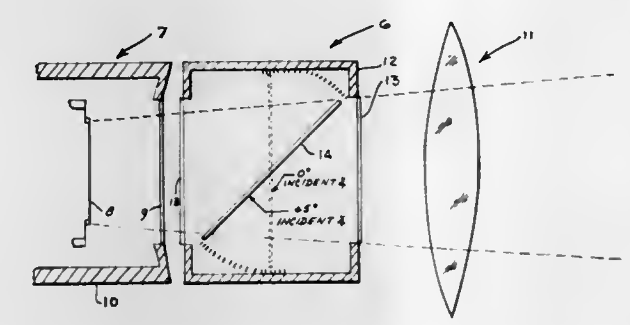

1. The method of multiple spectral wavelength imaging with an infrared television camera having a vidicon image tube to distinguish between laser and graybody targets comprising the steps of

directing said infrared television camera to view a selected scene,

positioning a narrow band dielectric filter adjacent the camera receiving aperture and in intercepting relationship with radiant emission from said selected scene,

processing received field of view radiant emission data taken by said infrared camera while the incident angle of said filter is continuously varied between 0° and 45° at the television vidicon image tube scanning rate, and

comparing variations in voltage signal to envelope noise ratios of received radiant emission to distinguish characteristic laser and graybody target irradiance patterns.

4,064,536

VIDEO SCRAMBLER AND DESCRAMBLER APPARATUS

Yoshifumi Saeki, and Hiroki Uemura, both of Tokyo, Japan, assignors to Pioneer Electronic Corporation, Inglewood, Calif.

Filed Feb. 3, 1976, Ser. No. 654,880

Claims priority, application Japan, Oct. 2, 1975, 50-119273

Int. Cl.² H04N *1/44*

U.S. Cl. 358—118 **12 Claims**

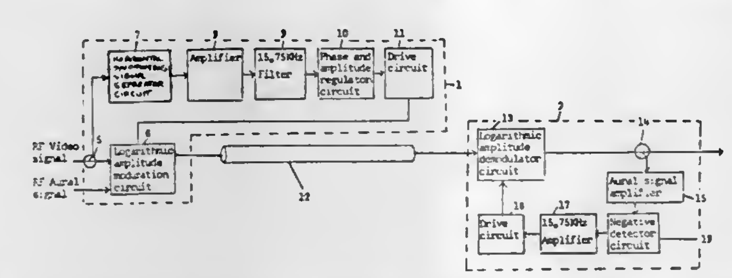

10. A scrambler and descrambler system for transmitted and received television signals having both RF video and RF aural components, the RF video component having a periodic horizontal synchronizing signal component, the system comprising:

means responsive to the RF video and RF aural components for concurrently modulating both components for transmission with a periodic non-linear component synchronous with the horizontal synchronizing signal component, the periodic non-linear component varying in accordance with a mathematical power term and being so disposed in phase as to invert the modulation relationship of the horizontal synchronizing signal component;

and means responsive to the received RF video and aural components for remodulating the RF video signals with a compensatory periodic non-linear component varying in accordance with the same mathematical power term in response to the periodic non-linear component in the RF aural component whereby the scrambling distortion introduced by said modulation is cancelled on remodulation.

4,064,537

AMPLITUDE LIMITING CIRCUIT FOR FREQUENCY MODULATED VIDEO SIGNALS

Yoshihiko Ota, Yokohama, and Akira Hirota, Chigasaki, both of Japan, assignors to Victor Company of Japan, Ltd., Yokohama, Japan

Filed July 13, 1976, Ser. No. 704,848

Claims priority, application Japan, July 14, 1975, 50-96679[U]

Int. Cl.² H04N *5/76*

U.S. Cl. 358—127 **5 Claims**

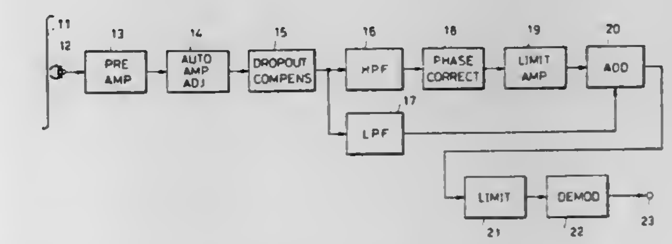

1. An amplitude limiting circuit comprising:

a source of frequency modulated video signals including a signal portion having a nonlinear centerline between the amplitude crests of the waveforms;

high-pass filtering means for passing the high frequency component of the frequency modulated video signal;

first amplitude limiting means for limiting the amplitude of the resulting output of the high-pass filtering means;

low-pass filtering means for passing the low frequency component of the frequency modulated video signal;

means for adding the output signal of the first amplitude limiting means and the output of the low-pass filtering means; and

second amplitude limiting means for limiting the amplitude of the resulting output of the adding means.

4,064,538

METHOD AND DEVICE FOR DISPLAYING A PICTURE FILM VIA A VIDEO-DISC

Georges Broussaud, Paris, France, assignor to Thomson-Brandt, Paris, France

Filed Mar. 24, 1976, Ser. No. 669,885

Claims priority, application France, Mar. 28, 1975, 75.09917

Int. Cl.² H04N *5/76*

U.S. Cl. 358—128 **3 Claims**

1. A method for displaying a picture film, said film comprising a succession of images, said method comprising the step of:

analysing each of said images on a frame comprising at least one principal field of K × L lines (L and K being positive integers) said principal field being divided into K interlaced secondary fields, said secondary fields being analysed successively for providing a first plurality of K successive video signals, and said video signals having a bandwidth extending to a fixed upper frequency;

recording successively said K successive video signals onto a video-disc bearing a spiral track comprising whorls; each of said successive video signals corresponding to a complete whorl;

reading out simultaneously K successive whorls for providing a second plurality of K video signals;

sampling successively the video signals of said second plurality at a rate substantially equal to said upper frequency, for providing a succession of samples;
collecting said samples for providing a modulation signal; and

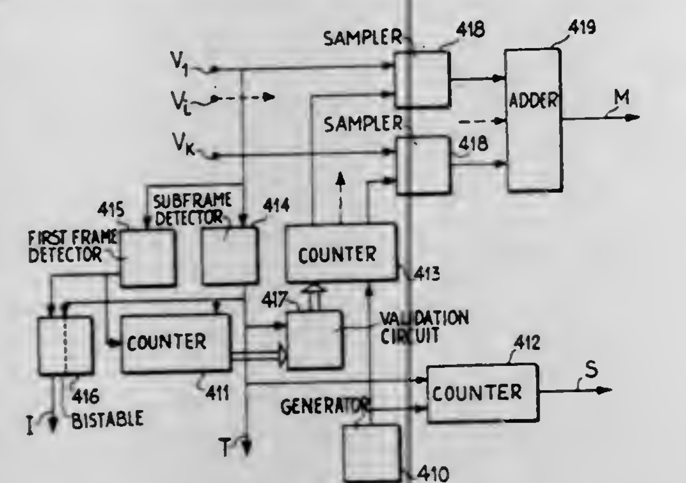

modulating display means actuated by said modulation signal; said display means being scanned along a composite raster consisting of a primary raster of L lines and a secondary raster formed with a sawtooth superimposed upon said primary raster; said composite raster distributing said samples for reconstructing the initial field of K × L lines.

4,064,539
DEVICE FOR MEASURING QUANTITIES OF ELECTRIC CHARGES OR SIMILAR ELECTRIC PARAMETERS
Jacques Lewiner, Saint-Cloud, and Gérard Dreyfus, Palatseau, both of France, assignors to Agence Nationale de Valorisation de la Recherche, Neuilly-sur-Seine, France
Filed Dec. 2, 1975, Ser. No. 637,047
Claims priority, application France, Dec. 9, 1974, 74.40303
Int. Cl.² H04N *5/80*
U.S. Cl. 358—128 **17 Claims**

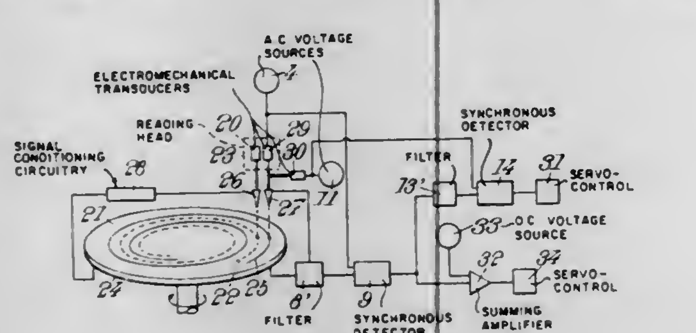

1. A device for measuring quantities of electric charges, the device comprising a capacitor, the capacitor having a measuring element and another element, means for applying an electrical parameter to the capacitor so that an electric charge representing the magnitude of the parameter is induced on the said measuring element, means for modulating the quantity of the electric charge induced on the measuring element at a first frequency f_o, means for modulating the quantity of the electric charge induced on the measuring element at a second frequency f_1 which is less than $f_o/2$, means for generating an alternating electric signal representing the modulation of the induced charge, means for deriving from the said alternating electric signal a first component which has a frequency f_o and represents the quantity of the induced charge, and means for deriving from the said alternating electric signal a second component which has a frequency f_1, the second component serving as a correction signal which depends upon the distance between the said measuring element and the location at which the electrical parameter is applied to the capacitor.

4,064,540
TIME REGISTRATION ARRANGEMENT PROVIDED WITH A TELEVISION CAMERA
Gerbrand Jetten, Eindhoven, Netherlands, assignor to U.S. Philips Corporation, Briarcliff Manor, N.Y.
Filed June 9, 1976, Ser. No. 694,148
Claims priority, application Netherlands, June 13, 1975, 7507048
Int. Cl.² H04N *7/08*
U.S. Cl. 358—142 **5 Claims**

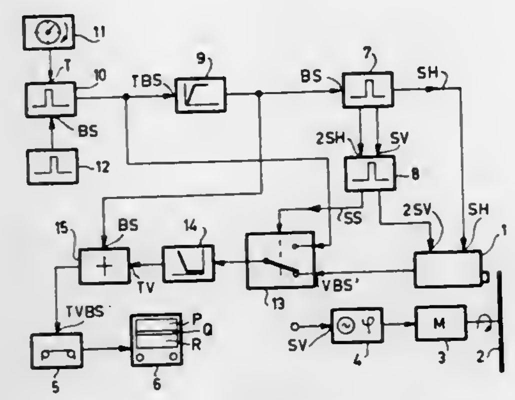

1. A time registration circuit arrangement for use with a television camera and a display device, said circuit comprising a storage device means adapted to be coupled to said camera and said display device for storing a video signal which is produced by the television camera and which represents a scene, a signal generator means adapted to be coupled to the television camera for supplying to the camera a field synchronisation-deflection signal having a repetition frequency which is essentially an integral multiple of the field frequency according to a television standard, and means adapted to be coupled to the television camera and coupled to the storge device for providing a video signal having the field frequency in accordance with the standard.

4,064,541
CONSTANT PULSE WIDTH SYNC REGENERATOR
Dennis Michael Schneider, Sewell, and Lucas John Bazin, Vincentown, both of N.J., assignors to RCA Corporation, New York, N.Y.
Filed June 28, 1976, Ser. No. 700,122
Claims priority, application United Kingdom, Mar. 19, 1976, 11121/76
Int. Cl.² H04N *5/10*
U.S. Cl. 358—153 **3 Claims**

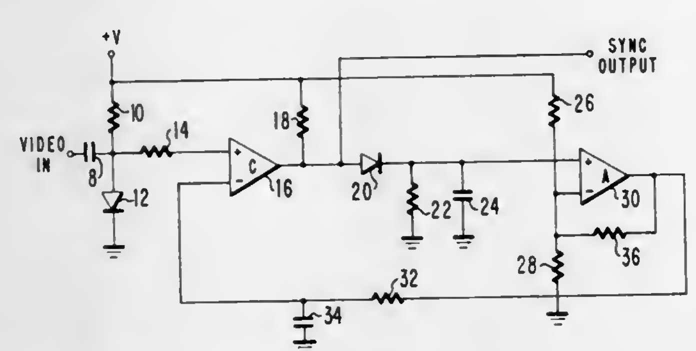

1. A circuit for regenerating synchronizing information signals, said synchronizing information signals having a varying amplitude and width, comprising:
a source of first reference potential;
comparator means responsive to said synchronizing information signals and said reference potential for developing an output signal of substantially constant amplitude when said synchronizing information signals exceed said first reference potential;
pulse width detector means coupled to said comparator means for producing an output signal representative of the width of said constant amplitude comparator output signal;
a source of second reference potential; and
feedback means coupled to said source of second reference potential and said detector means and responsive to said detector output signal for varying said first reference potential coupled to said comparator means for maintaining the width of said comparator output signal constant.

4,064,542
APPARATUS FOR MOUNTING A CATHODE RAY TUBE
Roland Roger Enkhaus, and John Paul Evert, both of St. Paul, Minn., assignors to Sperry Rand Corporation, New York, N.Y.
Filed Aug. 6, 1976, Ser. No. 712,433
Int. Cl.² H04N *5/645*
U.S. Cl. 358—245 **8 Claims**

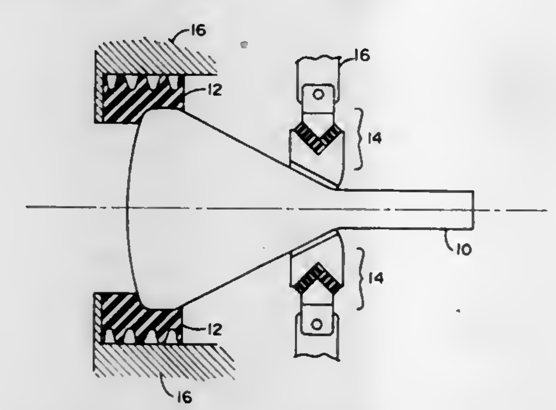

1. An apparatus for mounting a cathode ray tube, having a rear neck portion integrally formed with a frustum, in a frame, comprising:
a. a first annular member constructed of a substantially rigid material, positioned along said cathode ray tube near the convergence of said frustum portion and said neck of said cathode ray tube, affixed solidly to said cathode ray tube and having an outer surface which contains two surfaces which form an angle with the major axis of said cathode ray tube such that a surface for opposing a force substantially parallel to said major axis is provided;
b. a second annular member constructed of a substantially rigid material positioned circumjacent to said first annular member having an inner surface substantially complementary to said outer surface of said first annular member and whose outer surface is affixed to said frame; and
c. a resilient material interposed between said first annular member and said second annular member.

4,064,543
ELECTRON BEAM EQUIPMENT
Peter Harold Phillips, Fareham, and David William Warwick, Southampton, both of England, assignors to Plessey Handel und Investments A.G., Zug, Switzerland
Filed Apr. 13, 1976, Ser. No. 676,495
Claims priority, application United Kingdom, Apr. 16, 1975, 15559/75
Int. Cl.² H04N *5/645*
U.S. Cl. 358—248 **7 Claims**

1. A mounting arrangement for mounting scanning coil-/yoke structures on the neck of an electron beam tube comprising position adjustment means for producing lateral displacement of the scanning coil/yoke structure on the neck of the electron beam tube along two mutually perpendicular axes as well as axial displacement of the structure along the tube neck and tilt adjusting means for producing tilt of the coil with respect to the axis of the tube neck and constructed and arranged to afford simultaneous lateral displacement and tilt of the coil structure relative to the tube neck axis to afford optimum convergence control taking into account mechanical limitations imposed by the tube neck on which the scanning coil is mounted, wherein said tilt adjustment means comprises a tilt ring structure having internal peripheral cam tracks cooperable with surfaces on the scanning coil/yoke structure to

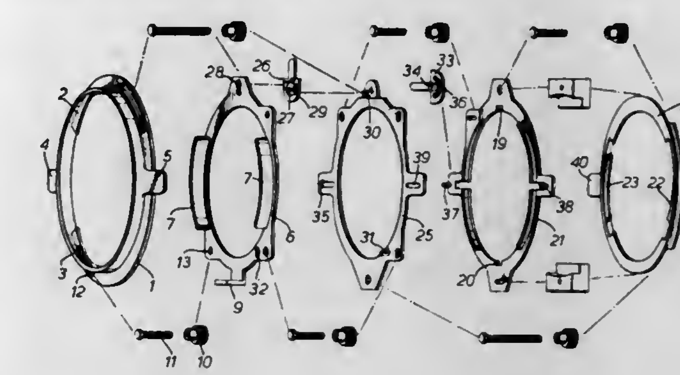

effect tilting of the coil in response to relative rotation between the tilt ring structure and the scanning coil/yoke structure.

4,064,544
RECORDER TRANSDUCER MOUNTING ARRANGEMENT HAVING A TRANSDUCER HOLDING PLATE MOVABLE ALONG A MOUNTING SURFACE OF A TRANSDUCER CARRIAGE
Boyd Lehman Stratton, Woodside, Calif., assignor to Arvin Industries, Inc., Columbus, Ind.
Filed Nov. 3, 1976, Ser. No. 738,309
Int. Cl.² G11B *5/00*
U.S. Cl. 360—99 **7 Claims**

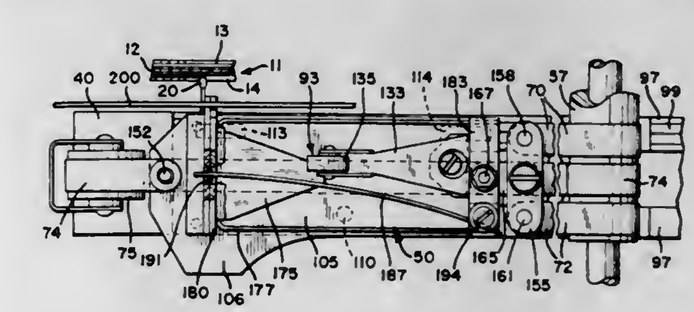

1. A disc recorder comprising:
a rotatable recording disc,
a transducer carriage transversely movable with respect to the axis of rotation of said rotating disc and including a mounting surface which is substantially perpendicular to said disc and substantially parallel to the direction of movement of said carriage,
means for moving said carriage transversely with respect to the axis of rotation of said disc,
a transducer holding plate positioned adjacent and parallel to said mounting surface,
parallel motion linkage means attaching said transducer holding plate to said carriage, for confining the motion of said transducer holding plate in a plane parallel to said mounting surface to motion which is substantially perpendicular to said disc,
spring means biasing said transducer holding plate against said mounting surface and biasing said transducer holding plate toward said disc, and
transducer means positioned on said transducer holding plate for co-acting with said rotating disc.

4,064,545
MAGNETIC COUPLING OF DISK FILE MODULE
Lloyd Chambers Goss, Bloomington, Minn., assignor to Control Data Corporation, Minneapolis, Minn.
Filed Feb. 10, 1977, Ser. No. 767,703
Int. Cl.² G11B *23/02, 17/02*
U.S. Cl. 360—133 **7 Claims**

1. A magnetic disc memory module of the type easily mounted on and detached from a drive unit incorporating a spindle drive magnetic field generator and a head arm shaft

drive magnetic field generator, said module comprising a housing; a spindle mounted for rotation therein; a set of recording discs carried by the spindle; a head arm shaft mounted for rotation in the housing; a set of head arms attached at one end to the head arm shaft and projecting therefrom; a set of heads carried on the head arm, spaced apart from the head arm shaft, and movable into data transducing relationship radially across the disc surface by rotation of the head arm shaft, wherein the improvement comprises

a. first magnetic field generator means attached to a first end of the spindle for producing a magnetic field interacting with the spindle drive magnetic field to produce rotation

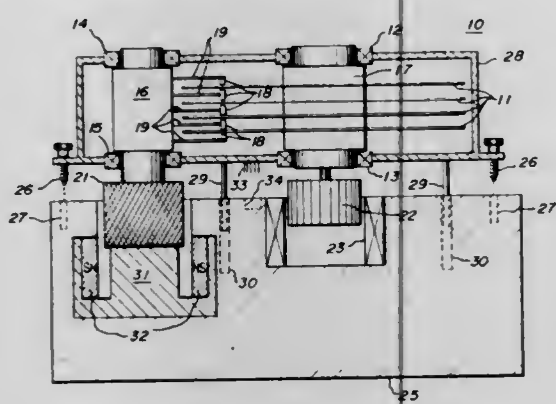

of the spindle, and physically spaced from the drive unit and removable therefrom when detaching the module from the drive unit;

b. second magnetic field generator means attached to a first end of the head arm shaft for producing a magnetic field interacting with the head arm shaft drive magnetic field to produce rotation of the head arm shaft, and physically spaced from the drive unit and removable therefrom when detaching the module from the drive unit; and

c. mounting means carried on the housing, for supporting, positioning and detachably fastening the module on the drive unit.

4,064,546

PROTECTION CIRCUITS

Thadée Domanski, Annezin-les-Bethune, France, assignor to Societe Chimique des Charbonnages, Paris, France

Filed June 16, 1976, Ser. No. 696,705

Claims priority, application France, June 23, 1975, 75.19591; Mar. 24, 1976, 76.08478; May 10, 1976, 76.13976

Int. Cl.² H02H *3/24*

U.S. Cl. 361—33 **15 Claims**

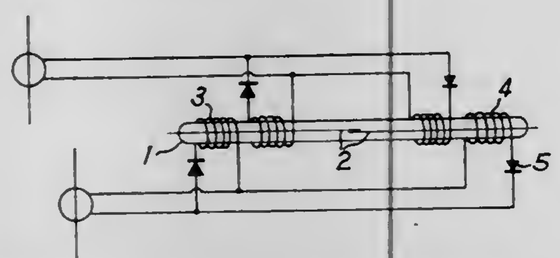

1. A protection circuit for protecting an electric appliance supplied through a power supply line, comprising

a reed switch having a set of magnetizable contact members, a set of contacts, each contact being mounted on a respective one of the contact members, a capsule housing the contact members and the set of contacts, and winding means supported by the capsule and energizable to produce a magnetic field for causing relative movement of the two contact members between first and second relative positioned settings,

generating means coupled to the power supply line to generate a current in response to the current drawn by the appliance through the power supply line,

first rectifying means electrically connected to the generating means for rectifying the generated current and supplying the rectified current to energize the winding means,

means supplying a current out-of-phase with the current generated by the generating means, and

second rectifying means connected to the current supply means to rectify the out-of-phase current and supplying the current to the winding means in a sense to produce a magnetic field assisting that produced by the generating means, whereby the composite magnetic field generated will maintain the set of contacts in the said first setting while the supply of both currents to the winding means is sustained but will switch the contacts to the second setting when the supply of one of said currents to the winding means fails.

4,064,547

VEHICLE ANTITHEFT DEVICE

Conrad J. Zagwyn, 60 Greentree Lane, South Weymouth, Mass. 02190

Filed June 4, 1976, Ser. No. 693,204

Int. Cl.² H01H *47/22*

U.S. Cl. 361—172 **4 Claims**

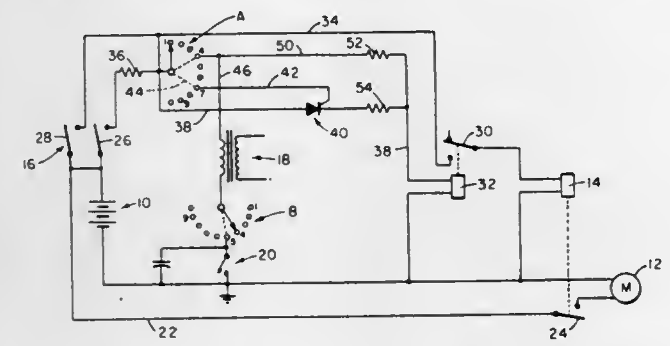

1. A vehicle anti-theft device for enabling and disabling the starting and ignition circuits associated with a vehicle engine comprising:

a relay-operated switch interposed in the starting circuit;

a multi-position code input switch having an indicia display for each position of the switch, said switch having an input terminal connected to the battery and a plurality of output terminals;

a primary of the output terminals being connected to the ignition circuit;

said relay being connected to the battery through a self-locking gate constructed and arranged to be switched to a conductive configuration and to remain in said conductive configuration as long as current flows therethrough;

said gate having an actuating input terminal connected to a different, secondary of the output terminals of said code input switch thereby requiring the code input switch to first be set to its secondary position to enable the starting circuit and then returned to its primary position to enable the ignition circuit;

a second multi-position code input switch interposed in the ignition circuit and connected to be closed in only one position thereof;

first impedance means interposed between the gate and the relay; and

means connecting the primary output contact of the first input code switch with the relay, said means including a second impedance therein, said impedances being selected to require the additive effect of current flowing therefrom to the relay to initiate actuation of the relay.

4,064,548

MEANS FOR IMPROVING IONIZATION EFFICIENCY OF HIGH-VOLTAGE GRID SYSTEMS

Robert H. Best, and William D. Harris, both of Greensboro, N.C., assignors to Burlington Industries, Inc., Greensboro, N.C.

Filed Jan. 27, 1976, Ser. No. 652,856

The portion of the term of this patent subsequent to Mar. 2, 1993, has been disclaimed.

Int. Cl.² F24F *3/12*

U.S. Cl. 361—229 **33 Claims**

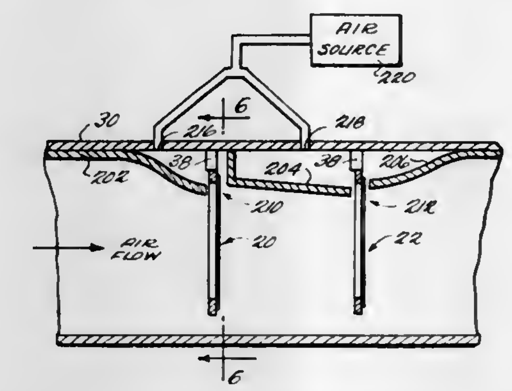

1. In a system for ionizing air passing through a metallic duct having an electrically conductive member, means for connecting said member to a source of high voltage so as to ionize air passing adjacent thereto through said duct and means for mounting said member in said duct insulated from the walls thereof the improvement comprising means for preventing material in the air from building up a conductive path between said member and said duct, including an electrically insulating sleeve surrounding said member between said member and said metallic duct.

4,064,549

CYLINDRICAL CAPACITIVE QUARTZ TRANSDUCER

Donald J. Cretzler, San Diego, Calif., assignor to Metrolology General Corporation, San Diego, Calif.

Filed Aug. 31, 1976, Ser. No. 719,189

Int. Cl.² H01G *7/00*

U.S. Cl. 361—283 **6 Claims**

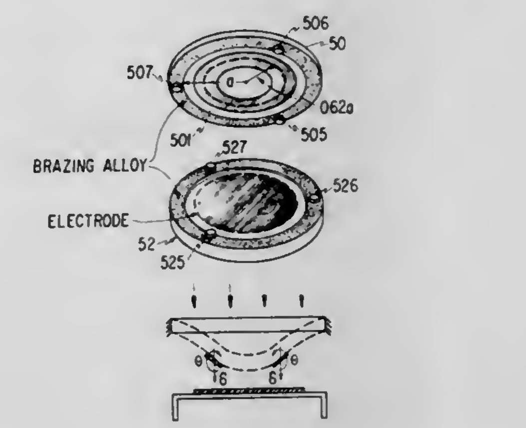

1. In combination in a transducer,

a first cylindrical member made from quartz and provided with a hollow interior and with an inner surface defining the hollow interior,

a second cylindrical member made from quartz and disposed within the first cylinder and having a surface in closely spaced relationship to the first cylinder member,

a first conductive layer on the internal surface of the first cylindrical member,

a second conductive layer on the external surface of the second cylindrical member,

the first and second member being fused along their peripheries at positions displaced from the first and second conductive layers, and

the first cylindrical member being provided with a progressively increased thickness at progressively displaced positions from the first and second conductive layers.

4,064,550

HIGH FIDELITY PRESSURE TRANSDUCER

J. Fleming Dias; Henry E. Karrer, both of Palo Alto, Calif., and Alexander Tykulsky, Carlisle, Mass., assignors to Hewlett-Packard Company, Palo Alto, Calif.

Filed Mar. 22, 1976, Ser. No. 668,760

Int. Cl.² H01G *7/00, 5/16*

U.S. Cl. 361—283 **5 Claims**

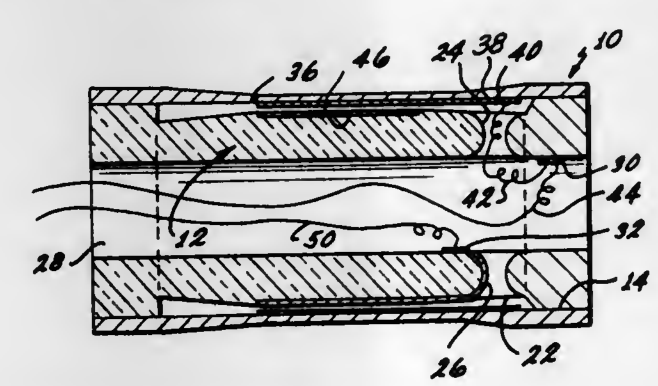

1. A fluid pressure transducer comprising:

a quartz body having a body electrode of electrically conductive material; and

a deflectable quartz diaphragm peripherially coupled to the body and having a ring shaped sensing electrode of electrically conductive material disposed on and substantially limited to the inflection circle of the diaphragm for capacitive coupling with the body electrode to form a sensing capacitor;

said diaphragm being deflected by fluid pressure fluctuations to change the capacitance of the sensing capacitor in substantially linear proportion to such fluctuations.

4,064,551

APPARATUS FOR INSERTION AND WITHDRAWAL OF PRINTED CIRCUIT BOARDS INTO AND FROM MOUNTING FRAMES

Richard Lightfoot, Dunrobin, Canada, assignor to Northern Telecom Limited, Montreal, Canada

Filed Nov. 29, 1976, Ser. No. 745,651

Int. Cl.² H02B *1/02*

U.S. Cl. 361—399 **4 Claims**

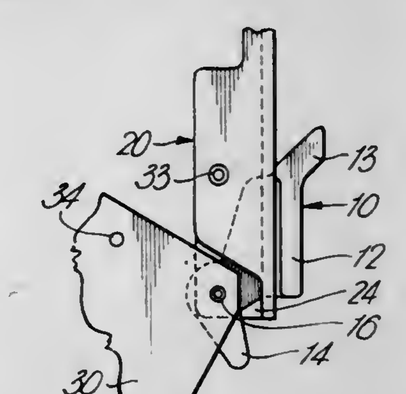

1. Apparatus for insertion and withdrawal of printed circuit boards into and from a mounting frame, comprising:

an elongate faceplate on a front edge of a printed circuit board, said faceplate including a front flange and a top flange extending along one long edge of the front flange on a rear surface thereof, the printed circuit board attached thereto; an open ended slot in said front flange at one end thereof, the slot spaced from and parallel to said top flange; a further flange on said rear surface of said front flange; extending along said slot on the side thereof remote from said top flange, and a hole through said further flange near the open end of said slot;

a cam member pivotally supported on said further flange and including an elongate body portion, a pivot at one end of said body portion, said pivot including a pin pivotal in said hole in said further flange; a cam portion extending from said one end of said body portion; and at least one rib on one side of said body portion extending longitudinally thereof, the overall thickness over said body portion and rib slightly greater than the width of said slot in said faceplate;

said cam member pivotal from a first position with the longitudinal axis of the cam member normal to the plane of the front flange of said faceplate, a major part of the body portion beyond the slot in the faceplate and extending forwards from said faceplate and the cam portion extending rearward of said faceplate, to a second position with said body portion in said slot, said rib snapped at least part way through said slot and said cam portion extending laterally from the end of the faceplate for engagement behind a frame member of said mounting frame.

4,064,552
MULTILAYER FLEXIBLE PRINTED CIRCUIT TAPE
Thomas L. Angelucci, 89 Charlan Circle, Cherry Hill, N.J. 08003, and Joseph L. Angelucci, 1948 Little Drive, Deptford, N.J. 08096
Filed Feb. 3, 1976, Ser. No. 654,749
Int. Cl.² H05K *1/04*
U.S. Cl. 361—414 12 Claims

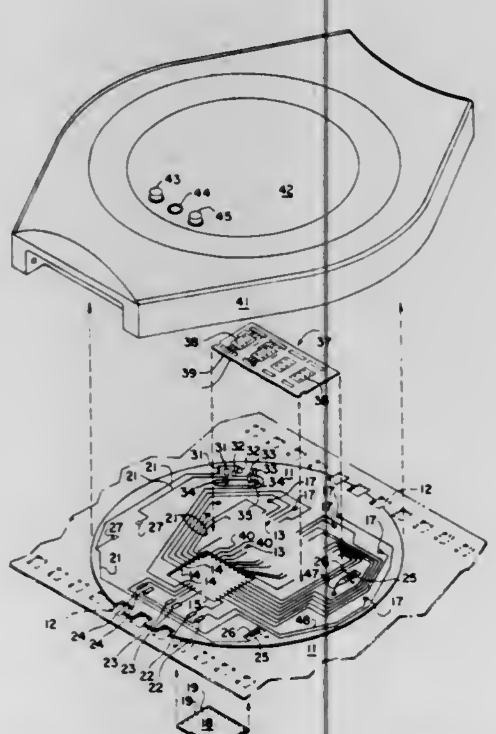

1. A multilayer flexible printed circuit tape having conductive attachment leads terminating in a mutual plane comprising:

a first flexible printed circuit top tape,

said top tape comprising a first dielectric carrier having at least one device aperture for receiving a semiconductor device,

a plurality of connection apertures and a plurality of indexing apertures therein,

a first flexible conductive foil pattern bonded to the top of said top tape comprising a plurality of inner flexible conductive fingers extending over said device aperture and a plurality of outer flexible conductive leads extending over said connection apertures,

a semiconductor device positioned in said device aperture and having a plurality of conductive lead-out pads thereon connected to said inner conductive fingers of said first conductive foil pattern,

a second flexible printed circuit bottom tape,

said bottom tape comprising a second dielectric carrier comprising a plurality of connection apertures and a plurality of indexing apertures therein, said apertures having the same location pattern as said aperture in said top tape,

an adhesive layer bonding the top of said second dielectric carrier to the bottom of said first dielectric carrier to form a laminate therewith,

a second flexible conductive foil pattern bonded to the bottom of said bottom tape comprising a plurality of intermediate flexible conductive paths thereon, and

a plurality of said outer flexible leads on said top tape extending through said connection apertures of said tapes and being bonded to said individual conductive leads on said bottom tape to provide a multilayer printed circuit tape.

4,064,553
INFORMATION PROCESSOR
Toshio Kashio, Tokyo, Japan, assignor to Casio Computer Co., Ltd., Tokyo, Japan
Filed Nov. 14, 1975, Ser. No. 631,907
Claims priority, application Japan, Nov. 15, 1974, 49-131644
Int. Cl.² G06F *13/00*
U.S. Cl. 364—200 4 Claims

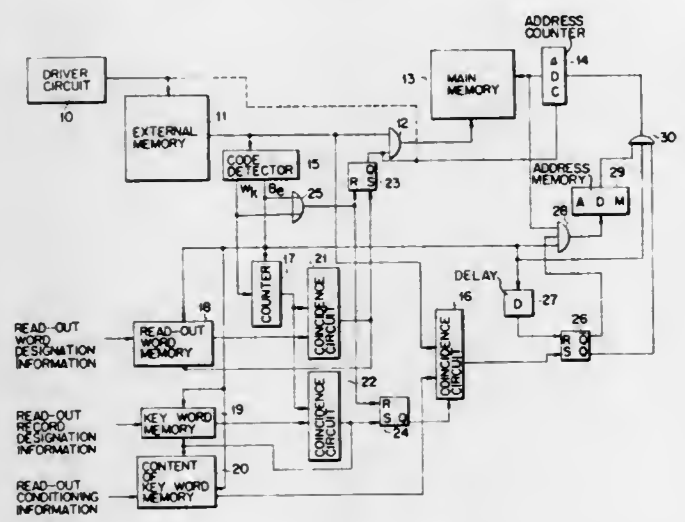

1. An information processor comprising:

an external memory (11) for storing a plurality of records which are arranged alternately with record positioning codes, each of said records including a plurality of words arranged alternately with word positioning codes;

a readout record designation means (19,20) for designating a key word based on which records to be read out are selected and for generating signals which indicate the designated key word;

a main memory (13) coupled to said external memory (11) for continuously reading out the records one by one from said external memory (11) to store the same in consecutive order while effecting address shift;

a comparison means (16) coupled to said external memory (11) and to said readout record designation means (19,20) for comparing the words in each record with the key word designated by said readout designation means when the record is written into said main memory (13); and

a control means coupled to said comparison means for permitting, in accordance with the output from said comparison means, only the records selected by the key word to be stored into said main memory in consecutive order, said control means including:

a heading address memory (29) coupled to said main memory (13) for successively renewing and storing the address of said main memory (13) at which a heading character of each record to be stored into said main memory (13) is to be stored; and

means (14,30) coupled to said comparison means (16), to said heading address memory (29) and to said main memory (13), and being responsive to said comparison means (16) for setting the address of said main memory (13) to act as the address stored in said heading address memory (29) when the record is found upon comparison not to coincide with the designated key word and for writing the next record into said main memory (13) from said address stored in said heading address memory (29).

4,064,554
MICROCOMPUTER WITH CODE CONVERSION
Graham S. Tubbs, Houston, Tex., assignor to Texas Instruments Incorporated, Dallas, Tex.
Filed Aug. 16, 1976, Ser. No. 714,718
Int. Cl.² G06F *9/00*
U.S. Cl. 364—200 9 Claims

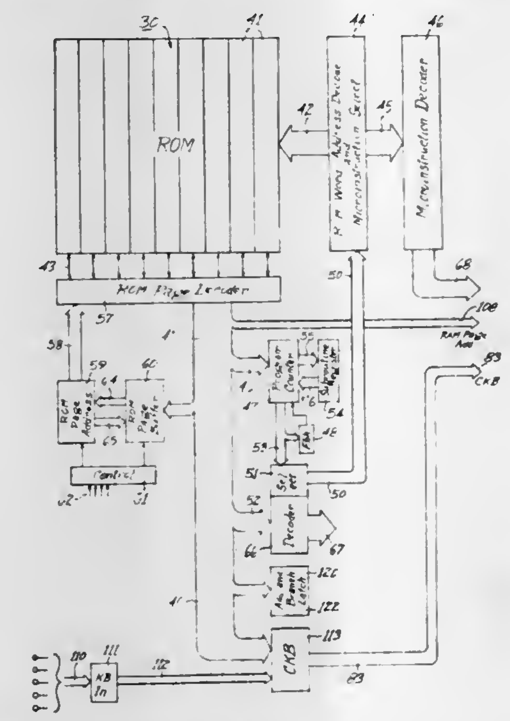

1. A digital processor of the type having:

instruction word access means for producing instruction words on a plurality of parallel output lines;

an arithmetic unit having inputs and outputs and control signal input means for receiving controls for defining the operation thereof;

data storage means having input control means and output control means for defining store and recall of data therein, the data storage means having data outputs interconnected by coupling means with inputs of the arithmetic logic unit and having data inputs interconnected by coupling means with outputs of the arithmetic logic unit;

control means including decoder means connected to receive instruction words from the plurality of parallel output lines and operative to produce control signals for defining the operation of the arithmetic unit and the coupling means and for defining store and recall of data in the data storage means via said input control means and output control means;

the improvement wherein the control means comprises:

first connection means for applying certain instructions from the plurality of parallel outputs in non-modified form to the decoder means, logic means responsive to the contents of the instruction words included in the first connection means for completing the connection;

second connection means for applying other selected instructions from the plurality of parallel inputs to the decoder means in a modified form, conversion means included in the second connection means to change the logical content of parts of the instruction words in the other selected instructions to correspond to the contents of the instruction words of said certain instructions.

4,064,555
GASOLINE PUMP MODIFICATION APPARATUS
Allan S. Ottenstein, Houston, Tex., assignor to Research Fuels, Inc., Houston, Tex.
Filed Sept. 27, 1976, Ser. No. 726,585
Int. Cl.² G09F *13/14*; B67D *5/22*; G09F *9/32*
U.S. Cl. 364—465 7 Claims

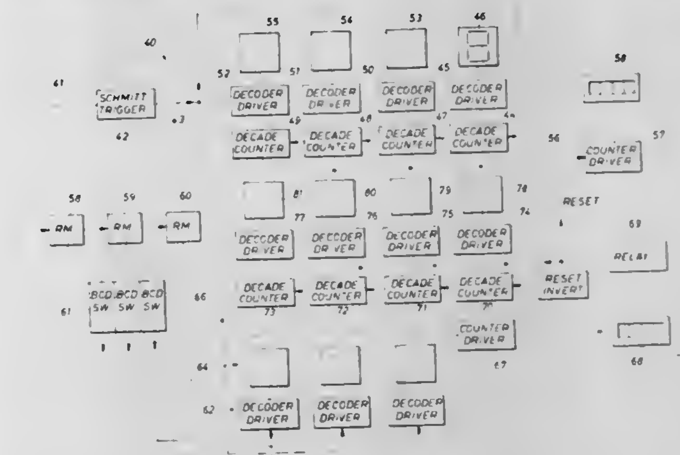

1. A read-out device supplying price information regarding a sale by a fuel pump which comprises:

a housing having a face plate thereon with openings formed in said face plate;

multi-segment numeric displays visible through the openings in said housing;

a non-glare structure constructed on the back side of the face of said housing extending from an opening through which said numeric display is viewed to shield the numeric display from stray light;

electronic price multiplication means which responds to first and second input signals where one input is representative of the total volume of fuel pumped and the other input is representative of the price per quantity;

means for forming driving signals for said numeric display causing said numeric display to form a price indication which means converts signals from said price multiplication means into the driving signals;

wherein said numeric display comprises a multi-digit arrangement of segmental displays which forms visible numbers;

an overhead eyebrow plate extending from said face plate to said numeric display and terminating at both ends of said numeric display with angled shield members preventing the intrusion of light from the ends; and

a generally horizontal plate protruding from the back of said face plate and which plate extends to said numeric display, and which plate is covered with a non-reflective material on its exposed area.

4,064,556
PACKED LOOP MEMORY WITH DATA MANIPULATION CAPABILITIES
Murray Edelberg, Carlisle; Theodore H. Bonn, Newton Centre, and Lloyd R. Schissler, Jamaica Plain, all of Mass., assignors to Sperry Rand Corporation, New York, N.Y.
Filed June 23, 1975, Ser. No. 589,321
Int. Cl.² G06F *7/24*
U.S. Cl. 364—900 12 Claims

1. In a multi-record circulating loop memory system, apparatus for sorting the data records contained therein comprising

a plurality of circulating loop means having *k* record positions therein for storing *k* data records, where *k* is a positive integer, and wherein columns of data records are formed comprising a data record from each circulating loop means and where said data records forming said columns are disposed in the same record position within their respective circulating loop means;

first data processing circuit means for performing data comparisons of a predetermined type suitable for sorting in accordance with predetermined criteria, said comparisons

being performed in each of said columns between data records disposed in the same column and re-ordering said data records within their respective columns according to said comparisons;

second data processing circuit means for processing the data records stored within said memory system such that the data records disposed in each circulating loop means are shifted a record position, in a common direction, with respect to the data records in the next preceding circulating loop means; and

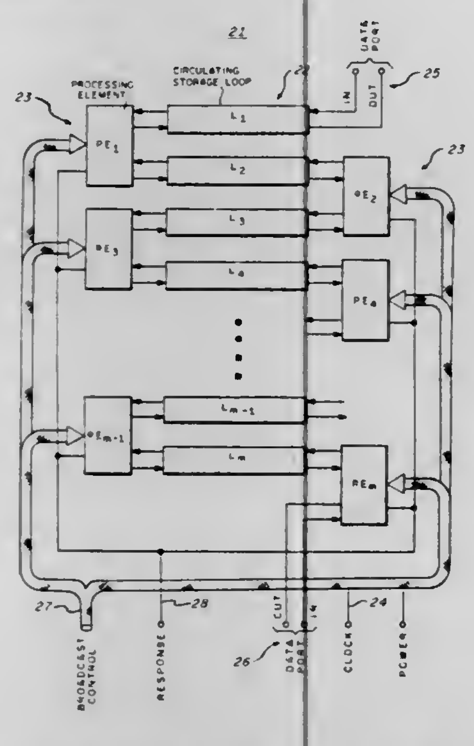

means for coupling data manipulation control signals from said memory system to said first and second data processing circuit means including signals for operating said first and second data processing circuit means alternately wherein, subsequent to k operations of said first data processing circuit means and $k-1$ operations of said second data processing circuit means, the data records stored in each circulating loop means are sorted with respect to the data records disposed in every other circulating loop means.

4,064,557

SYSTEM FOR MERGING DATA FLOW

Robert Glenn Bluethman, Austin; Michael Eudell McBride, Leander, and Wayne Finis Rogers, Austin, all of Tex., assignors to International Business Machines Corporation, Armonk, N.Y.

Continuation of Ser. No. 439,785, Feb. 4, 1974, abandoned, which is a continuation-in-part of Ser. No. 194,418, Nov. 1, 1971, abandoned. This application July 14, 1975, Ser. No. 595,840

Int. Cl.² G06F *7/32*

U.S. Cl. 364—900 **10 Claims**

1. A method of merging groups of data codes stored in a memory upon output of said codes to a printer, said method comprising the steps of:

dividing said memory into sections by a first separator control code generated by a separator control code generator;

storing in one section of said memory (a) a second operating point control code generated by an operating point control code generator, (b) data codes, and (c) at least one switch code;

storing in another section of said memory (a) a third holding point control code generated by a holding point control code generator, (b) data codes, and (c) at least one switch code;

decoding said codes by a decoder;

outputting from said memory to said printer said data codes adjacent said second control code in said one of said sections until said switch code in said one of said sections is decoded adjacent said second control code;

exchanging the memory locations of said second and third control codes in said memory sections;

and

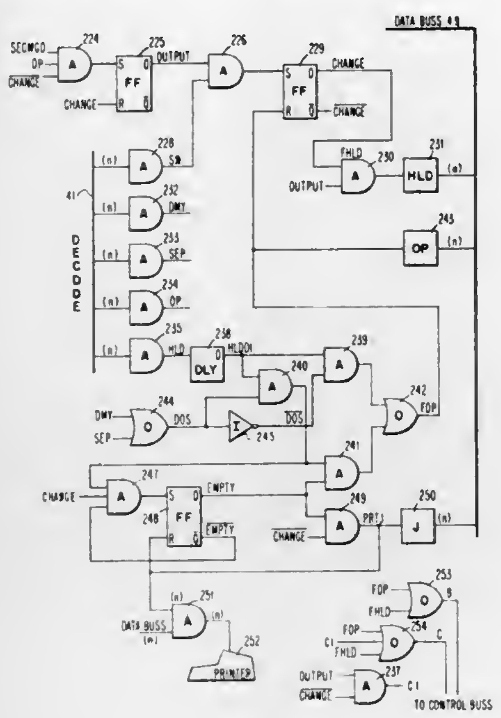

outputting to said printer said data codes adjacent said second control code insaid another of said sections.

4,064,558

METHOD AND APPARATUS FOR RANDOMIZING MEMORY SITE USAGE

William C. Hughes, Scotia; Wayne B. Nelson, and George E. Possin, both of Schenectady, all of N.Y., assignors to General Electric Company, Schenectady, N.Y.

Filed Oct. 22, 1976, Ser. No. 734,767

Int. Cl.² G06F *7/00*

U.S. Cl. 364—900 **25 Claims**

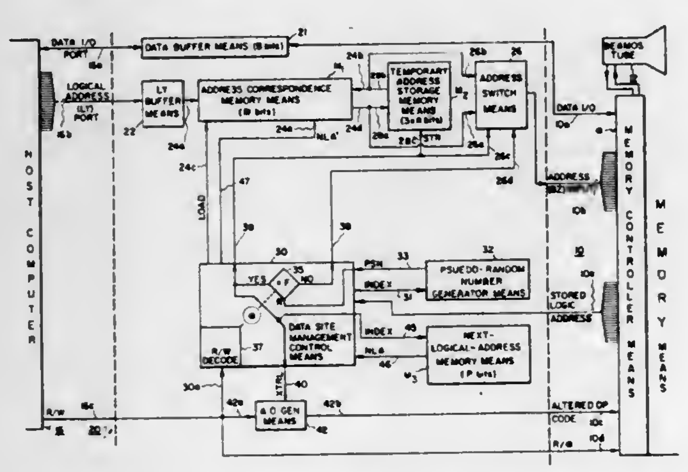

1. A method for randomizing memory site usage in a rewritable memory device containing a plurality of data blocks each having a different physical address within the memory device, said memory device having a memory address port at which an address code for accessing a desired one of said plurality of data blocks may appear, said method comprising the steps of:

a. randomly selecting at least one physical address within the memory device to each designate an initially empty temporary storage data block;

b. pairing each of a plurality of logical address codes presentable to the device with an address code presentable at the memory address port for a physical address of one of the remaining data blocks;

c. storing each pair of logical address and physical address in an address correspondence memory means;

d. generating a substantially random number responsive to each of at least one selected type of data access command to said memory device to access data in a data block therein having a first physical address corresponding to a first logical address simultaneously presented to the auxiliary correspondence memory means;

e. comparing the substantially random number to a preselected fixed number to generate an exchange enable signal if said numbers are equal;

f. exchanging the data in the data block having the first physical address with the data in one temporary storage data block having a second physical address, responsive to the exchange enable signal being present; and

g. modifying the auxiliary correspondence memory means to contain the second physical address in correspondence with the first logical address.

4,064,559

APPARATUS FOR SUPPRESSING UNDESIRED INFORMATION

Tsuyoshi Kawanabe, Yokohama, Japan, assignor to Canon Kabushiki Kaisha, Tokyo, Japan

Continuation of Ser. No. 358,486 May 9, 1973, abandoned. This application Mar. 20, 1975, Ser. No. 560,509

Claims priority, application Japan, May 15, 1972, 47-47862

Int. Cl.² G06F *3/14*

U.S. Cl. 364—900 **3 Claims**

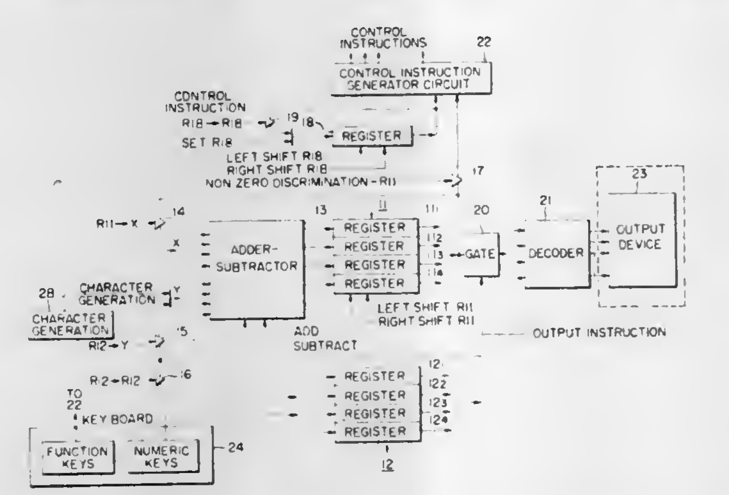

1. An apparatus for suppressing undesired information comprising:

a first register for storing therein plural digits of character or symbol information in the form of coded signals;

a second register for storing therein a plurality of signals in digits corresponding to the digits of said first register;

an output device for displaying information from said first register;

determining means for associating certain digits of said first register with corresponding digits of said second register;

means, responsive to said determining means, for detecting the presence of desired information in the corresponding digits in said first register;

means, operative in response to detecting the presence of desired information in said corresponding digits of said first register, for reducing the number of said corresponding digits in said second register by one digit from the least significant digit thereof; and

means, operative in response to failing to detect the presence of desired information in said corresponding digits of said first register, for providing said output device with all of the digits of information stored in said first register except any digit or digits therein associated with the signals then stored in the corresponding digit or digits of said second register, wherein only the desired digits of the information stored in said first register are displayed in the output device.

4,064,560

MASTER KEYBOARD TERMINAL WITH AUXILIARY KEYBOARD TERMINAL CAPABILITY

William D. Baxter, Seymour, Conn., assignor to Bunker Ramo Corporation, Oak Brook, Ill.

Filed July 25, 1975, Ser. No. 599,046

Int. Cl.² G06F *3/04*

U.S. Cl. 364—900 **9 Claims**

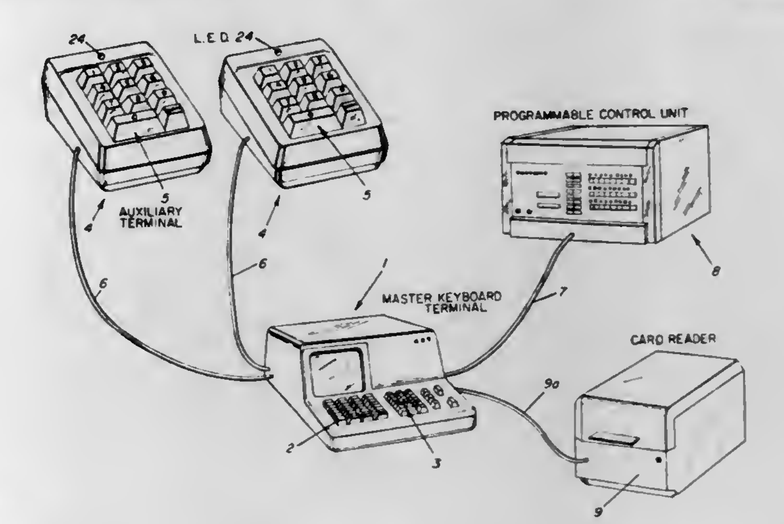

1. A system having a master keyboard terminal and an auxiliary keyboard terminal, the auxiliary terminal comprising:

a. keyboard switch means for entering data thereon;

b. multiplexing means having the switch means connected to a first input thereof;

c. a second input of the multiplexing means enabled by a selection switch in the master keyboard terminal;

d. a third input of the muliplexing means connected to the master keyboard terminal for carrying a variable count, generated by the master keyboard terminal; and

e. an output of the multiplexing means for carrying a control signal upon coincidence between the data entered on the keyboard switch means and a particular count of the variable count, simultaneous with a signal appearing at the second input;

f. the control signal transmitted to the master keyboard terminal for dumping the particular count from the master keyboard terminal to an external data processing device, corresponding to the entered data.

4,064,561

CRT KEY STATION WHICH IS RESPONSIVE TO CENTRALIZED CONTROL

Alan K. Jennings, Huntington Beach, Calif., assignor to Pertec Computer Corporation, Los Angeles, Calif.

Division of Ser. No. 532,714, Dec. 13, 1974, Pat. No. 4,041,469. This application Nov. 26, 1976, Ser. No. 745,458

Int. Cl.² G06F *3/14*

U.S. Cl. 364—900 **4 Claims**

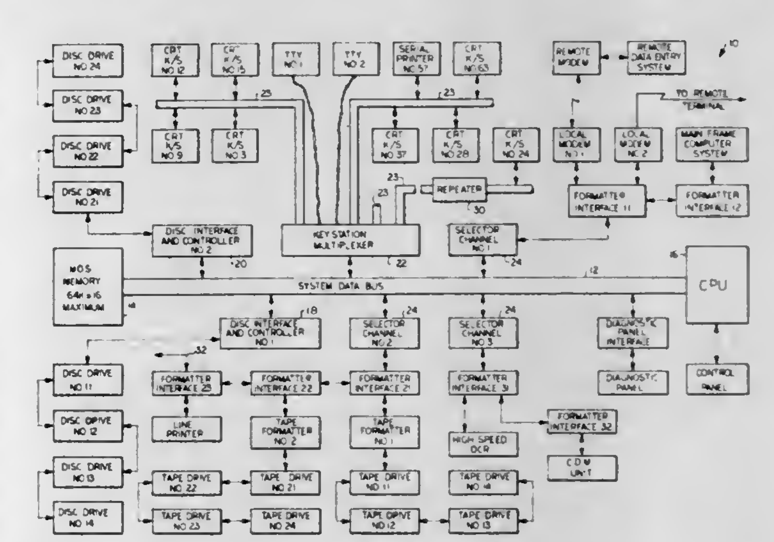

1. A data terminal comprising:

an information input circuit connectable to receive messages

for the terminal in a message format which allows each message to be divided into at least one part, each part including at least one address code indicating a location in a display memory for the terminal where all character codes included in the part are to be stored, at least one character code indicating a character to be displayed, and a variance code indicating a variance state for all of the display characters indicated by the at least one character code included in the part;

a display memory having a plurality of address locations for storing a character code indicating a display character and the presence or absence of a display variance command, each display memory address location corresponding to a character display position;

an optical display device providing an illuminated display having normal and varied optical characteristics in response to display control signals;

a display driver system including means responsive to the display memory for providing to the optical display device display control signals causing the display device to display characters indicated by the character codes stored in the display memory, said display control signals selectively commanding a normal or varied display in response to a variance code portion of the stored character code indicating the character being displayed; and

memory write circuitry responsive to the messages for the data terminal received by the information input circuit, the memory write circuitry including means responsive to each part of a received message for writing character codes included in the part of the received message into the display memory at a location indicated by the at least one address code for the part of the message, and including means responsive to the variance cpde included in the part of the received message for including in each of the character codes written into the display memory a variance code portion indicative of the variance code included in the part of the received message.

DESIGN PATENTS

GRANTED DECEMBER 20, 1977

ERRATA

For CLASS	See PATENT NO.
087–001 R	246,743

DESIGNS

DECEMBER 20, 1977

246,681
HAT BILL AND BRIM
Jack E. Hursh, 291 Lewis Ave., Millbrae, Calif. 94030
Filed Feb. 12, 1976, Ser. No. 657,488
Term of patent 14 years
Int. Cl. D2—*03*
U.S. Cl. D2—260

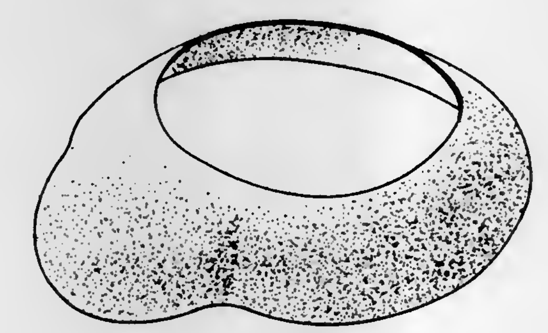

246,682
MULTI-PURPOSE BABY RECLINING SEAT WITH TABLE BOARD
Shinroku Nakao, Yokohama, Japan, assignor to Combi Co., Ltd., Tokyo, Japan
Filed Jan. 6, 1976, Ser. No. 646,914
Term of patent 14 years
Int. Cl. D6—*01*
U.S. Cl. D6—7

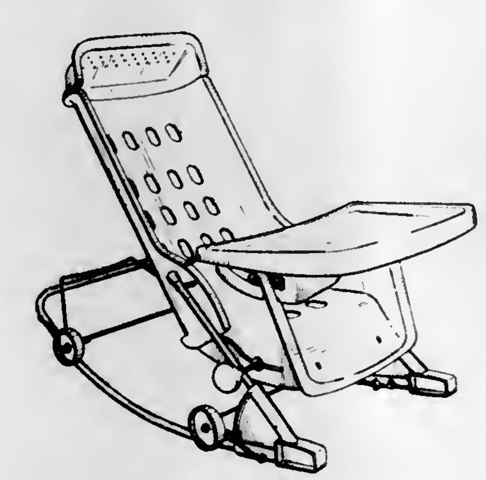

246,683
COMBINED PICNIC TABLE AND BENCH OR SIMILAR ARTICLE
Donald D. Cagle, 2500 S. U St., Fort Smith, Ark. 72901
Filed May 5, 1976, Ser. No. 683,423
Term of patent 14 years
Int. Cl. D6—*06*
U.S. Cl. D6—45

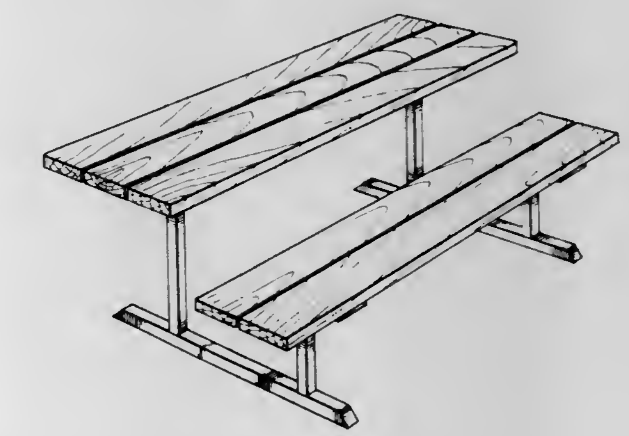

246,684
SEAT
Stanley P. Nash, Johnson Creek, Wis., assignor to Schweiger Industries, Inc., Jefferson, Wis.
Filed June 11, 1976, Ser. No. 695,749
Term of patent 7 years
Int. Cl. D6—*01*
U.S. Cl. D6—63

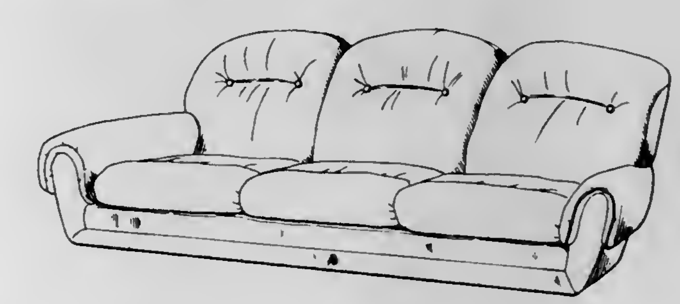

246,685
CHAIR
Leif Blodee, Holland, Mich., assignor to American Seating Company
Filed June 23, 1976, Ser. No. 698,610
Term of patent 14 years
Int. Cl. D6—*01*
U.S. Cl. D6—73

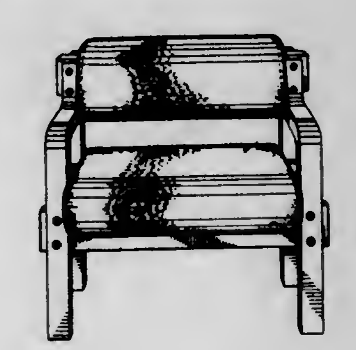

246,686
DEEP FRY COOKER
Melvin H. Boldt, Glenview, Ill., assignor to National Presto Industries, Inc., Eau Claire, Wis.
Filed Apr. 5, 1976, Ser. No. 673,427
Term of patent 14 years
Int. Cl. D7—*02*
U.S. Cl. D7—94

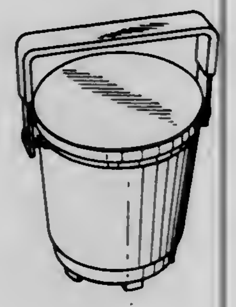

246,687
BARBECUE-TABLE
Guy Selva, 7, Rue Vendome, Lyon, Rhone, France
Filed May 14, 1976, Ser. No. 687,111
Term of patent 14 years
Int. Cl. D7—*02*
U.S. Cl. D7—107

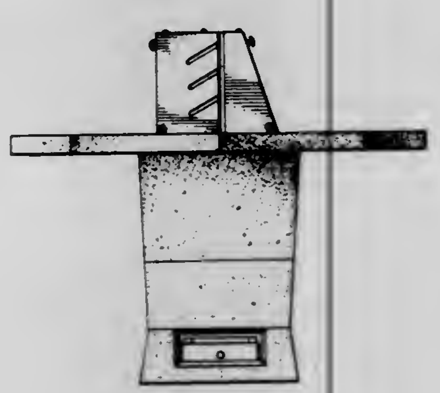

246,688
ROD FOR UNLOCKING AND LOCKING THE DOOR OF A VEHICLE
Murray R. Nassau, 9880 W. Bay Harbor Drive, Bay Harbor Island, Fla. 33154
Filed Dec. 9, 1976, Ser. No. 749,005
Term of patent 14 years
Int. Cl. D6—*05*
U.S. Cl. D6—88

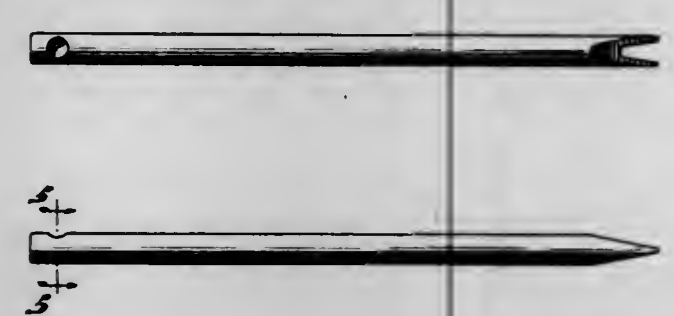

246,689
PULL
LaVerne E. Clayton, Rockford, Ill., assignor to Amerock Corporation, Rockford, Ill.
Filed Feb. 27, 1976, Ser. No. 661,945
Term of patent 14 years
Int. Cl. D8—*06*
U.S. Cl. D8—307

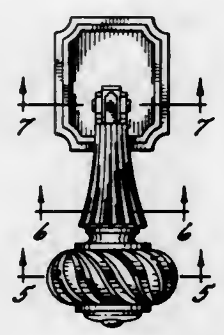

246,690
PULL
LaVerne E. Clayton, Rockford, Ill., assignor to Amerock Corporation, Rockford, Ill.
Filed Feb. 27, 1976, Ser. No. 662,221
Term of patent 14 years
Int. Cl. D8—*06*
U.S. Cl. D8—307

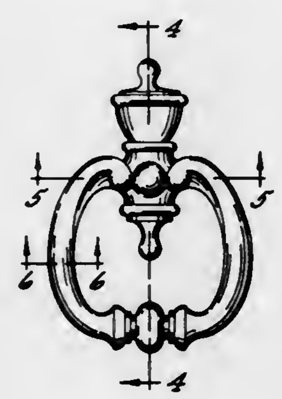

246,691
DIAL CONTROL KNOB FOR MEDICAL INSTRUMENT
Nagashige Takahashi, No. 28-10, 3-Chome, Tokiwadai, Itabashi, Tokyo, Japan
Filed Jan. 28, 1977, Ser. No. 763,757
Claims priority, application Japan, July 28, 1976, 51-29466
Term of patent 14 years
Int. Cl. D8—*06*
U.S. Cl. D8—310

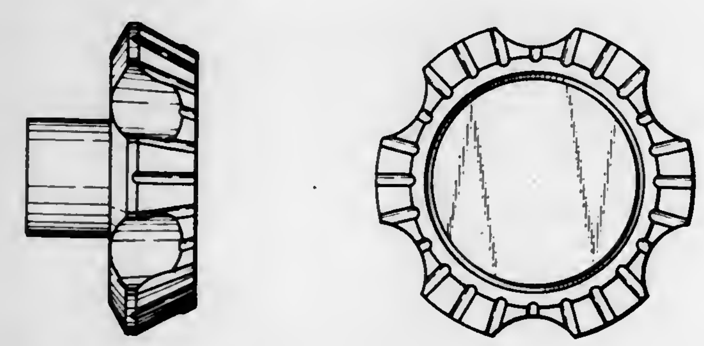

246,692
PULL
Raymond U. H. Tegner, Lodi, Wis., assignor to Amerock Corporation, Rockford, Ill.
Filed Feb. 27, 1976, Ser. No. 661,961
Term of patent 14 years
Int. Cl. D8—*06*
U.S. Cl. D8—316

246,693
PULL
Raymond U. H. Tegner, Lodi, Wis., assignor to Amerock Corporation, Rockford, Ill.
Filed Feb. 27, 1976, Ser. No. 661,988
Term of patent 14 years
Int. Cl. D8—*06*
U.S. Cl. D8—320

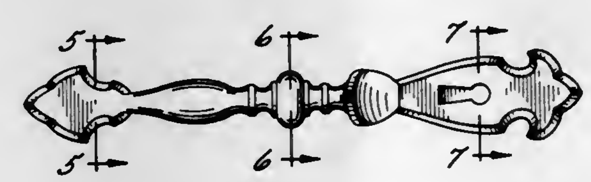

246,694
PULL
LaVerne E. Clayton, Rockford, Ill., assignor to Amerock Corporation, Rockford, Ill.
Filed Feb. 27, 1976, Ser. No. 662,016
Term of patent 14 years
Int. Cl. D8—*06*
U.S. Cl. D8—319

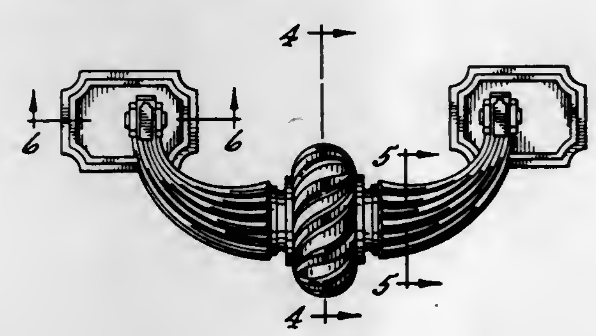

246,695
PULL
LaVerne E. Clayton, Rockford, Ill., assignor to Amerock Corporation, Rockford, Ill.
Filed Feb. 27, 1976, Ser. No. 661,989
Term of patent 14 years
Int. Cl. D8—*06*
U.S. Cl. D8—319

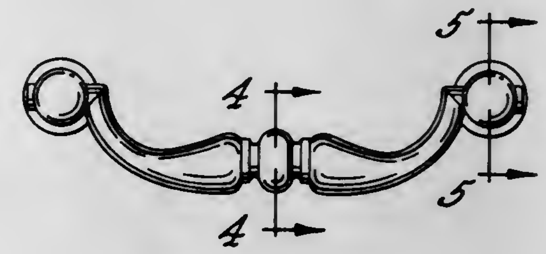

246,696
ESCUTCHEON
LaVerne E. Clayton, Rockford, Ill., assignor to Amerock Corporation, Rockford, Ill.
Filed Feb. 27, 1976, Ser. No. 662,030
Term of patent 14 years
Int. Cl. D8—*09*
U.S. Cl. D8—350

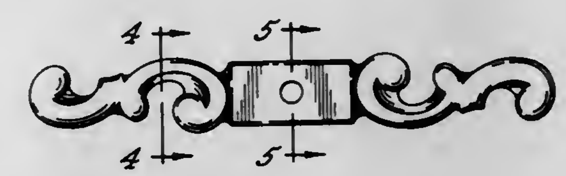

246,697
CHAIN LINK
Edward A. Graetz, Pound, Wis., assignor to Graetz Manufacturing, Inc., Pound, Wis.
Filed Nov. 28, 1975, Ser. No. 635,873
Term of patent 14 years
Int. Cl. D8—*99*
U.S. Cl. D8—499

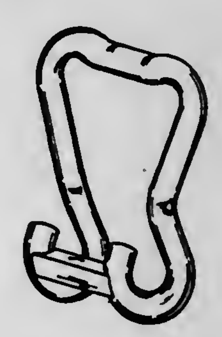

246,698
REVERSIBLE SAFETY CAP AND SCREW CAP FOR CONTAINERS
Glenn H. Morris, 4203 Highwood Drive, Chattanooga, Tenn. 37415
Filed May 28, 1976, Ser. No. 690,961
Term of patent 14 years
Int. Cl. D9—*07*
U.S. Cl. D9—284

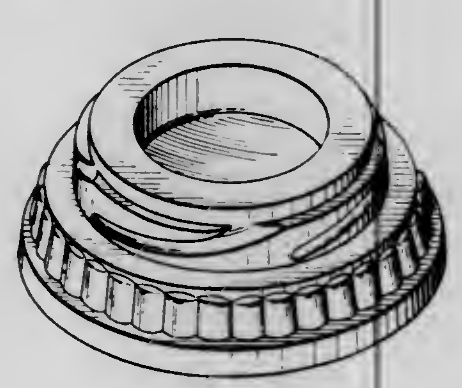

246,699
ROOF FRAMING TOOL FOR CARPENTERS
Dale M. Pingel, 4071 Alderbrook SE., Salem, Oreg. 97302
Filed Feb. 23, 1976, Ser. No. 660,056
Term of patent 14 years
Int. Cl. D10—*04*
U.S. Cl. D10—65

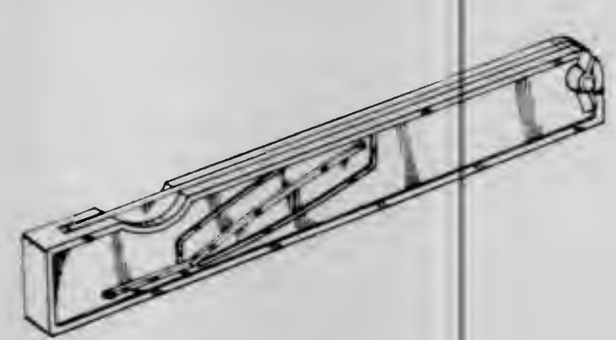

246,700
SMOKE DETECTOR
Channing Wallace Gilson, Los Angeles, Calif., assignor to A-T-O Inc., Willoughby, Ohio
Filed June 14, 1976, Ser. No. 695,714
Term of patent 14 years
Int. Cl. D10—*05*
U.S. Cl. D10—106

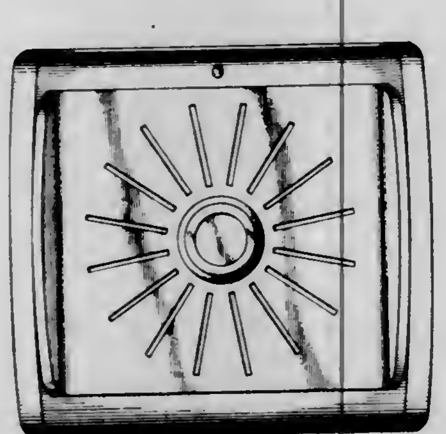

246,701
FIRE ALARM
Channing Wallace Gilson, Los Angeles, Calif., assignor to A-T-O Inc., Willoughby, Ohio
Filed June 30, 1976, Ser. No. 701,311
Term of patent 14 years
Int. Cl. D10—*05*
U.S. Cl. D10—106

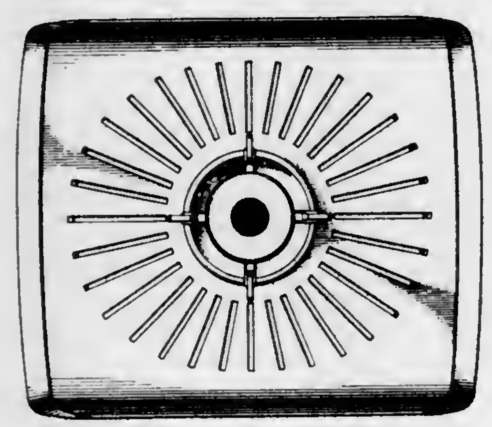

246,702
SWIMMING POOL GUARD BUOY
Gordon G. Thornley, 3333 N. Gulf Shore Drive, Naples, Fla. 33940
Filed May 27, 1976, Ser. No. 690,718
Term of patent 14 years
Int. Cl. D10—*06*
U.S. Cl. D10—107

246,703
PENDANT
Sidney A. Schofield, 3059 Corbin Ave., Decatur, Ga. 30034
Filed May 14, 1976, Ser. No. 686,307
Term of patent 14 years
Int. Cl. D11—*01*
U.S. Cl. D11—79

246,704
HEART-SHAPED FASTENER
Jack Ophir, Tenafly, N.J., assignor to Charles Greenburg
Filed Mar. 17, 1976, Ser. No. 667,905
Term of patent 14 years
Int. Cl. D11—*01*
U.S. Cl. D11—87

246,705
VENDOR'S CART BODY
John Martorano, 437 W. Merchant St., Audubon, N.J. 08106
Filed June 23, 1976, Ser. No. 698,877
Term of patent 14 years
Int. Cl. D12—*02*
U.S. Cl. D12—22

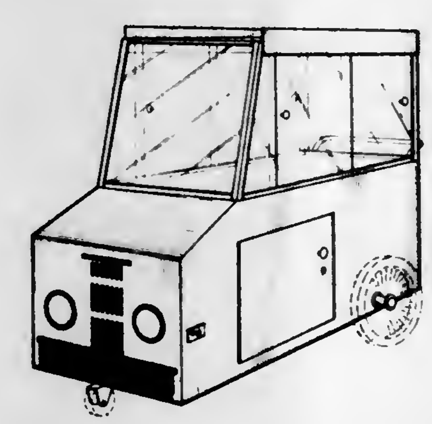

246,706
COMBINED AIR FOIL AND RETRACTABLE AWNING
Donald S. McKee, Louisville, Colo., assignor to The Scott & Fetzer Company, Lakewood, Ohio
Filed Aug. 30, 1976, Ser. No. 718,922
Term of patent 14 years
Int. Cl. D12—*16*
U.S. Cl. D12—155

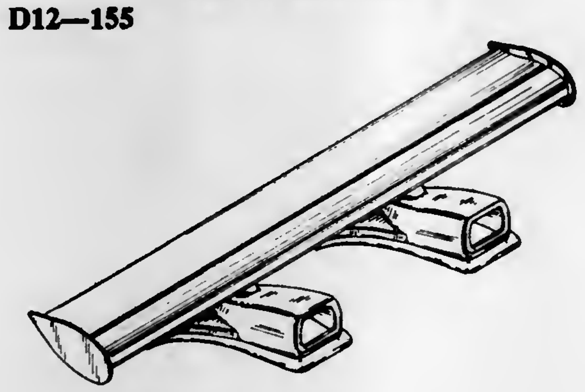

246,707
CAR REAR SIDE DOOR PANEL
Michel Tixier, Boulogne-Billancourt, France, assignor to Regie Nationale des Usines Renault, Boulogne-Billancourt, France
Filed July 21, 1975, Ser. No. 597,871
Claims priority, application France, Feb. 20, 1975, 75.73,636
Term of patent 14 years
Int. Cl. D12—*16*
U.S. Cl. D12—196

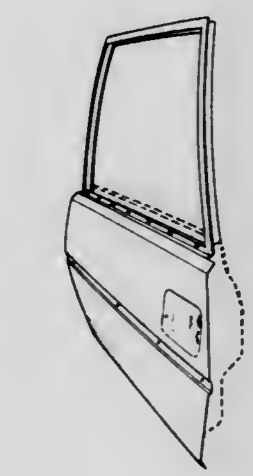

246,708
CAR FRONT FENDER PANEL
Michel Tixier, Boulogne-Billancourt, France, assignor to Regie Nationale des Usines Renault, Boulogne-Billancourt, France
Filed July 21, 1975, Ser. No. 597,819
Claims priority, application France, Feb. 20, 1975, 75.73636
Term of patent 14 years
Int. Cl. D12—*16*
U.S. Cl. D12—184

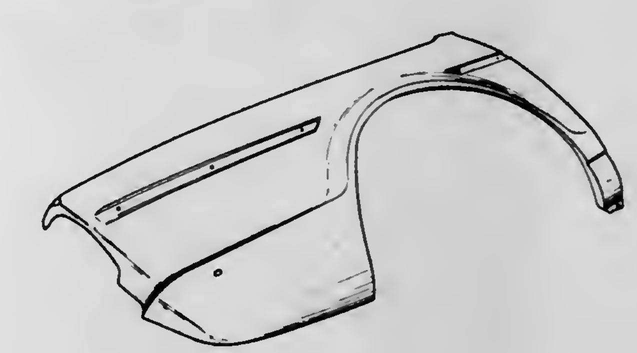

246,709
VOLTAGE CONVERTER OR THE LIKE
William R. Pomper, Highland Park, Ill., assignor to Pomco, Inc., Chicago, Ill.
Filed June 7, 1976, Ser. No. 693,277
Term of patent 14 years
Int. Cl. D13—*02*
U.S. Cl. D13—11

246,710
LOUDSPEAKER CABINET
Norman Leonard Thomasen, 1401 E. Borchard St., Santa Ana, Calif. 92705
Filed June 21, 1976, Ser. No. 698,406
Term of patent 14 years
Int. Cl. D14—*01*
U.S. Cl. D14—33

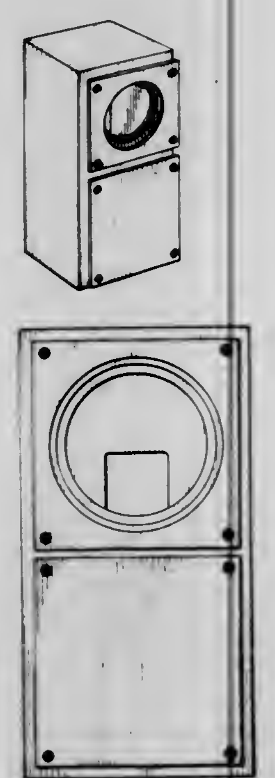

246,711
DATA-COLLECTION APPARATUS
Collan Blendon Kneale, Rochester, Minn., assignor to International Business Machines Corporation, Armonk, N.Y.
Filed Jan. 9, 1976, Ser. No. 647,677
Term of patent 14 years
Int. Cl. D14—*02*
U.S. Cl. D14—40

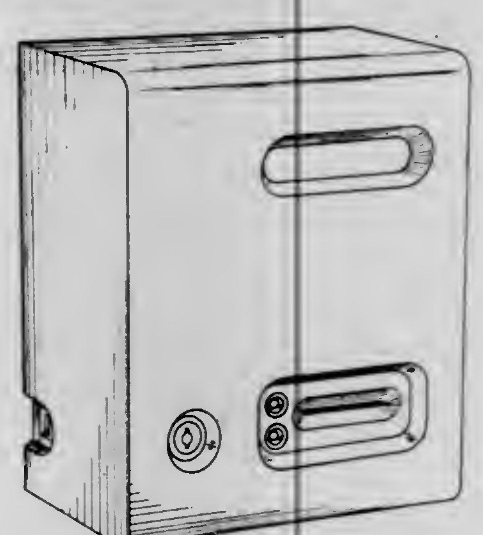

246,712
DETACHABLE RATIO FOR HELMETS
Michael T. Shugrue, Gardner, Kans., assignor to Gregory Pepper
Filed Apr. 9, 1976, Ser. No. 675,350
Term of patent 14 years
Int. Cl. D14—*03*
U.S. Cl. D14—68

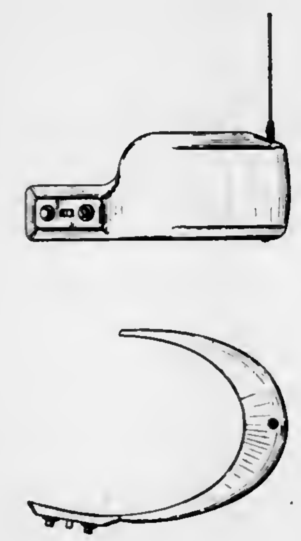

246,713
TELEVISION RECEIVER
Robert W. Becker, Naperville; Melvin H. Boldt, Glenview, and David P. Chuboff, North Barrington, all of Ill., assignors to Zenith Radio Corporation, Glenview, Ill.
Filed Sept. 8, 1975, Ser. No. 611,457
Term of patent 7 years
Int. Cl. D14—*01*
U.S. Cl. D14—77

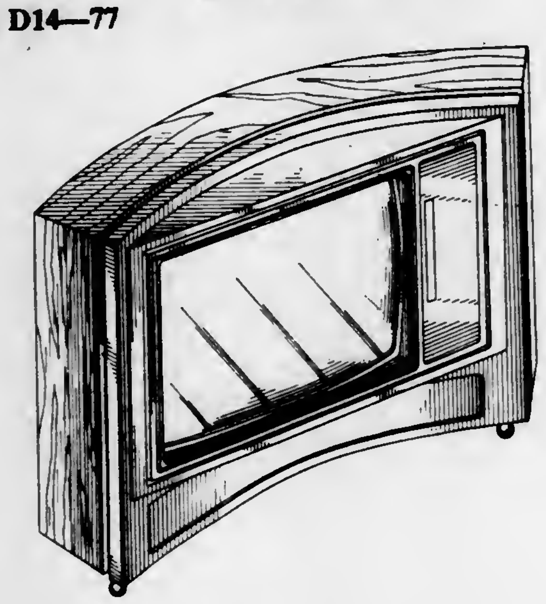

246,714
AQUARIUM PUMP
Tibor Horvath, New York, N.Y., assignor to Aquology Pet Corporation, Newark, N.J.
Filed Sept. 27, 1976, Ser. No. 726,936
Term of patent 14 years
Int. Cl. D15—*02*
U.S. Cl. D15—8

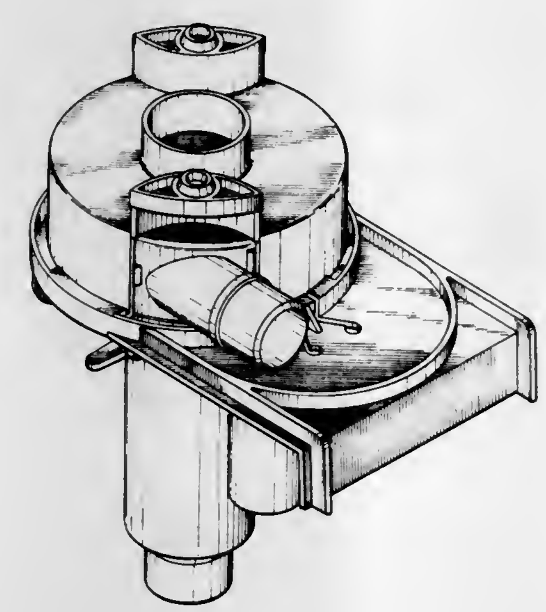

246,715
MOBILE MIXER
Andrew B. Clement, P.O. Box 33061, Decatur, Ga. 30033
Filed Sept. 2, 1976, Ser. No. 719,972
Term of patent 14 years
Int. Cl. D15—*04*
U.S. Cl. D15—19

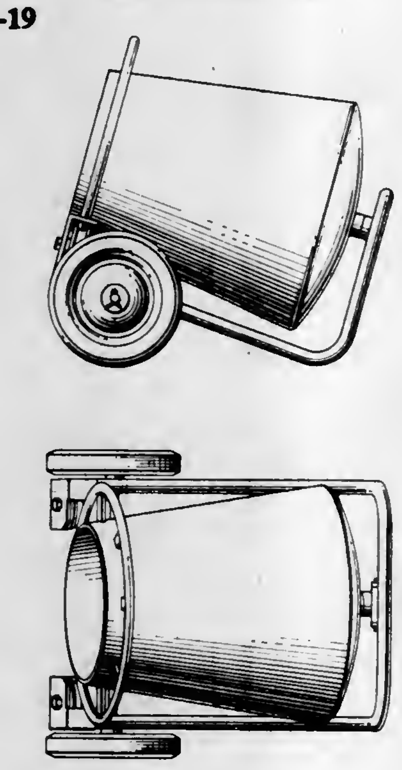

246,716
CULTIVATOR TINE
Cornelis van der Lely, 7, Bruschenrain, Zug, Switzerland
Filed Apr. 13, 1976, Ser. No. 676,421
Claims priority, application Benelux, Oct. 14, 1975, 50605-00
Term of patent 14 years
Int. Cl. D15—*03*
U.S. Cl. D15—29

246,717
CAMERA OR SIMILAR ARTICLE
Tetsuro Ooya, Osaka, Japan, assignor to Minolta Camera Kabushiki Kaisha, Azuchi, Japan
Filed Apr. 12, 1976, Ser. No. 676,188
Claims priority, application Japan, Oct. 13, 1975, 50-41055
Term of patent 14 years
Int. Cl. D16—*01*
U.S. Cl. D16—6

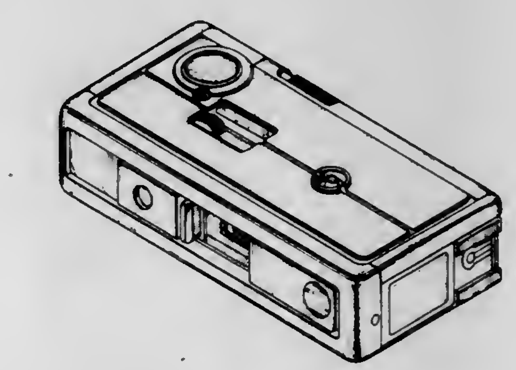

246,718
EYEGLASS FRAME
Hilde Zimmermann, Vienna, Austria, assignor to Christian Dior, S.A.R.L., Paris, France
Filed Aug. 25, 1976, Ser. No. 717,621
Term of patent 14 years
Int. Cl. D16—*06*
U.S. Cl. D16—65

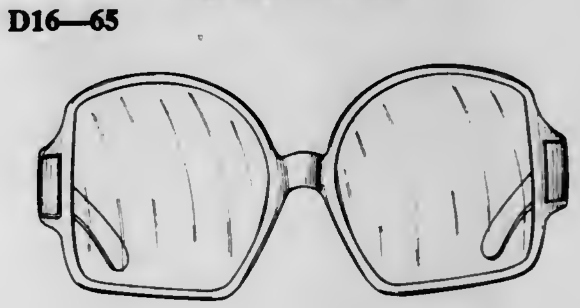

246,719
EYEGLASS FRAME
Hilde Zimmermann, Vienna, Austria, assignor to Christian Dior, S.A.R.L., Paris, France
Filed Aug. 25, 1976, Ser. No. 717,680
Term of patent 14 years
Int. Cl. D16—*06*
U.S. Cl. D16—65

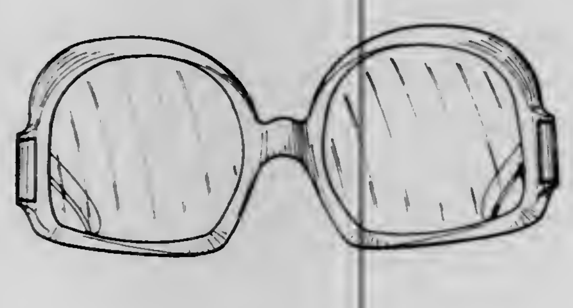

246,720
PAIR OF SPECTACLES
Richard W. Canavan, III, South Woodstock, Conn., assignor to American Optical Corporation, Southbridge, Mass.
Filed Oct. 28, 1976, Ser. No. 736,617
Term of patent 14 years
Int. Cl. D16—*06*
U.S. Cl. D16—65

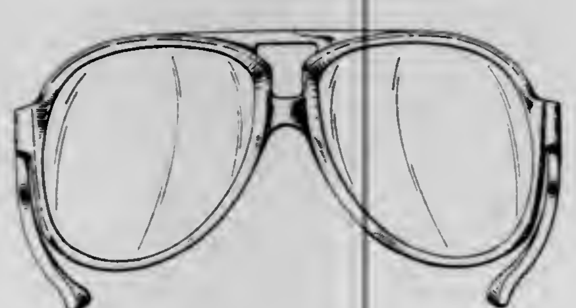

246,721
PAIR OF SPECTACLES
Richard W. Canavan, III, South Woodstock, Conn., assignor to American Optical Corporation, Southbridge, Mass.
Filed Mar. 21, 1977, Ser. No. 779,458
Term of patent 14 years
Int. Cl. D16—*06*
U.S. Cl. D16—65

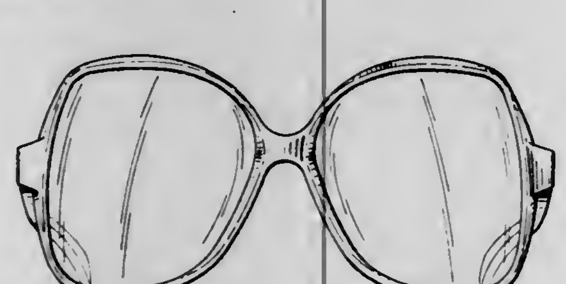

246,722
DISPOSABLE RECORDING PEN
Jerald C. Raahauge, Anaheim, Calif., assignor to Kingman-White, Inc., Placentia, Calif.
Division of Ser. No. 584,711, June 9, 1975, Pat. No. Des. 244,025. This application Dec. 13, 1976, Ser. No. 750,297
Term of patent 14 years
Int. Cl. D19—*06*
U.S. Cl. D19—41

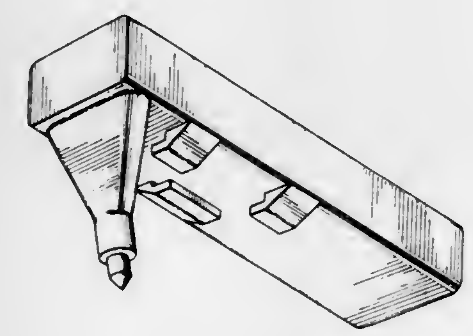

246,723
PEN
Alain Carré, Paris, France, assignor to Waterman S.A., Paris, France
Filed Oct. 9, 1975, Ser. No. 621,041
Claims priority, application France, Apr. 10, 1975, 75.73776
Term of patent 14 years
Int. Cl. D19—*06*
U.S. Cl. D19—49

246,724
AQUARIUM FILTER
Allan H. Willinger, New York, N.Y., assignor to Willinger Bros., Inc., New York, N.Y.
Filed Dec. 6, 1976, Ser. No. 748,101
Term of patent 14 years
Int. Cl. D23—*01*
U.S. Cl. D23—4

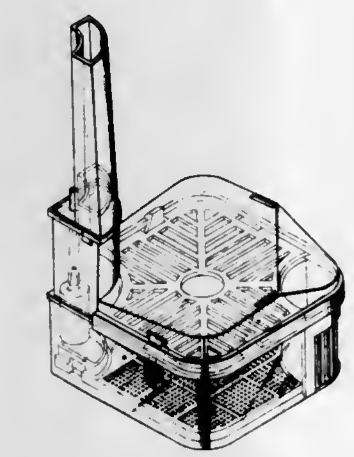

246,725
FAN FOR INTERNAL COMBUSTION ENGINES
Bern M. Bonifant, Tacoma, Wash., assignor to Flex-a-lite Corporation, Tacoma, Wash.
Filed Apr. 2, 1976, Ser. No. 673,124
Term of patent 14 years
Int. Cl. D23—*04*
U.S. Cl. D23—165

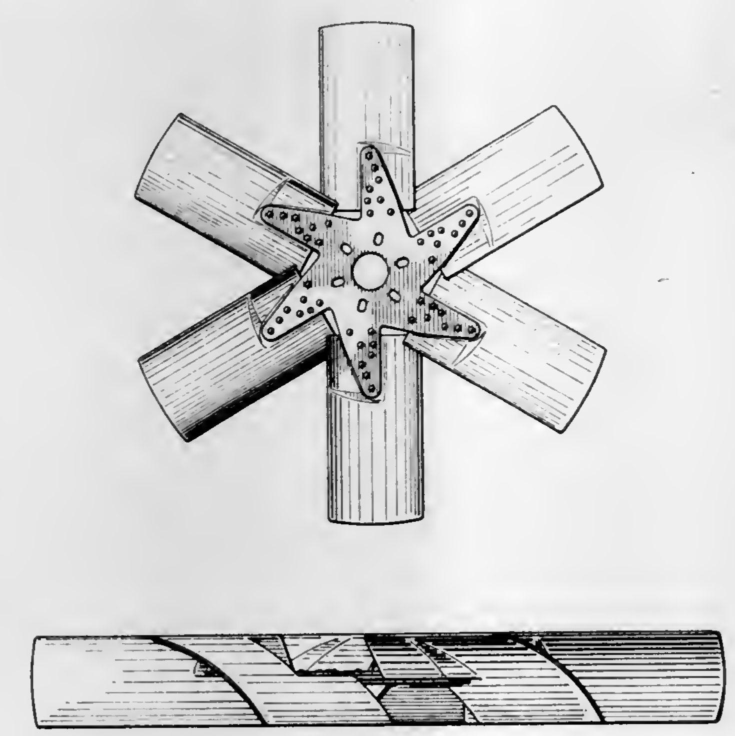

246,726
SURGEON'S HOLDER FOR HEMOSTATIC AGENTS
J. DeWitt Fox, 1894 Carla Ridge, Beverly Hills, Calif. 90210
Filed Feb. 23, 1976, Ser. No. 660,009
Term of patent 14 years
Int. Cl. D24—*02;* D6—*04*
U.S. Cl. D24—31

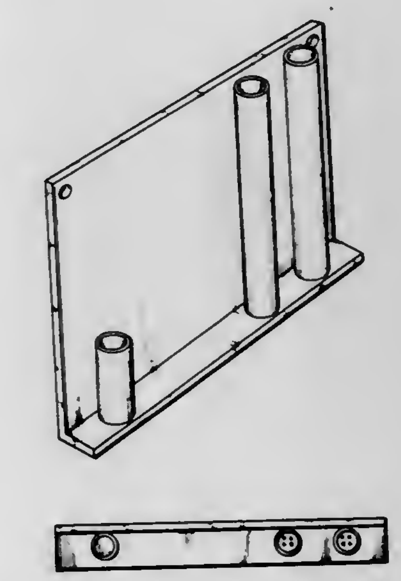

246,727
MASSAGE EXERCISER
Edgar E. Holkesvick, 201 S. Lewis, No. 208, Orange, Calif. 92668
Filed Feb. 23, 1976, Ser. No. 659,987
Term of patent 14 years
Int. Cl. D24—*04;* D28—*03*
U.S. Cl. D24—36

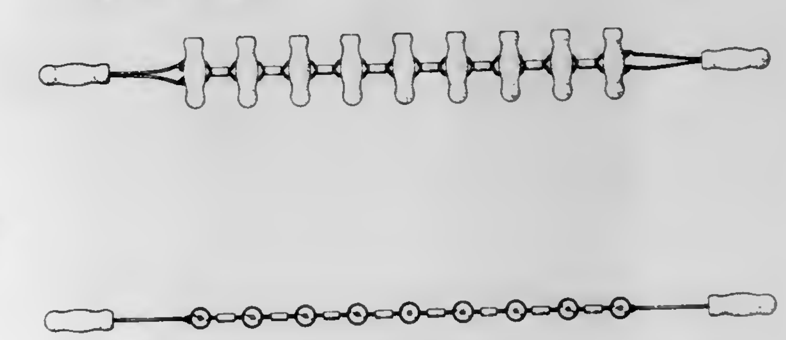

246,728
SWIMMING EXERCISE AND THERAPEUTIC POOL
Robert S. Wormser, Rte. 10, Box 50, Ocala, Fla. 32670
Filed Dec. 19, 1975, Ser. No. 642,450
Term of patent 14 years
Int. Cl. D24—*01;* D23—*02;* D25—*99*
U.S. Cl. D24—38

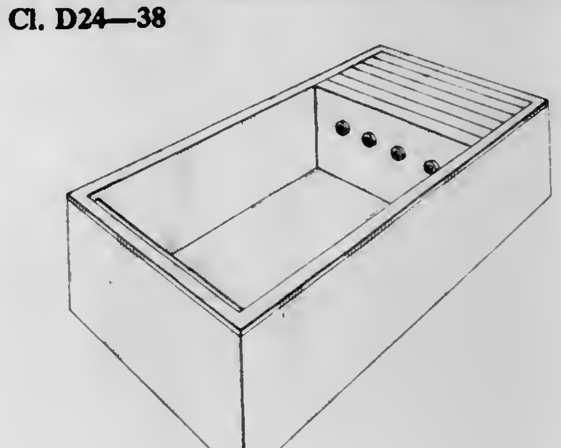

246,729
COMBINED BREAST SHIELD AND MILK COLLECTOR
Michael K. Murphy, 21 Hillcrest Drive, San Rafael, Calif. 94901
Filed Apr. 21, 1976, Ser. No. 679,104
Term of patent 14 years
Int. Cl. D24—*99*
U.S. Cl. D24—49

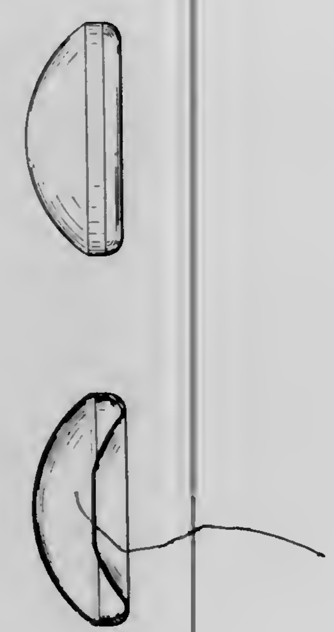

246,730
ELECTRIC HAIR DRYER
Patrick M. Tomaro, Maplewood, N.J., assignor to Conair Corporation, Edison, N.J.
Filed May 28, 1976, Ser. No. 691,194
Term of patent 14 years
Int. Cl. D28—*03*
U.S. Cl. D28—13

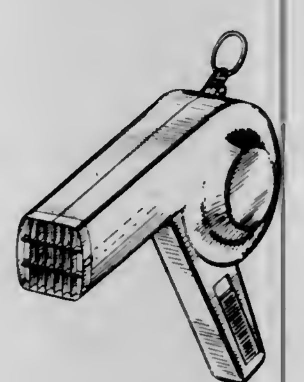

246,731
DRY SHAVER OR SIMILAR ARTICLE
Jack Alister, Drachten, Netherlands, assignor to U.S. Philips Corporation, New York, N.Y.
Filed Dec. 31, 1975, Ser. No. 645,916
Claims priority, application Benelux, July 2, 1975, 50399-03
Term of patent 14 years
Int. Cl. D28—*03*
U.S. Cl. D28—50

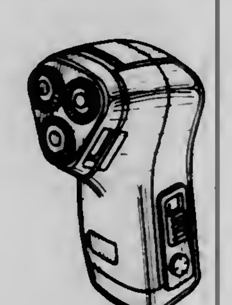

246,732
ZODIACAL BETTING CLOTH
Vincent J. Picataci, 6032 Marigny St., New Orleans, La. 70122
Filed Mar. 22, 1976, Ser. No. 669,351
Term of patent 14 years
Int. Cl. D21—*01*
U.S. Cl. D34—5 SS

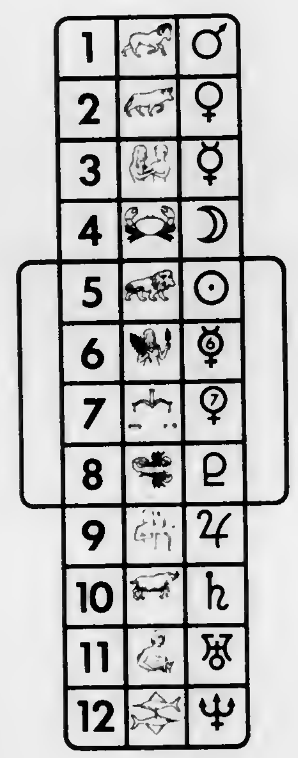

246,733
DODECAHEDRON DIE WITH ZODIACAL FIGURES
Vincent J. Picataci, 6032 Marigny St., New Orleans, La. 70122
Filed Mar. 22, 1976, Ser. No. 669,352
Term of patent 14 years
Int. Cl. D21—*01*
U.S. Cl. D34—5 DT

246,734
GOLF CLUB
Fukashi Morita, Kasai, Japan, assignor to Kabushiki Kaisha Ariga Golf Group Seisakusho, Kawaguchi, Japan
Filed May 19, 1976, Ser. No. 687,921
Term of patent 14 years
Int. Cl. D21—*02*
U.S. Cl. D34—5 GC

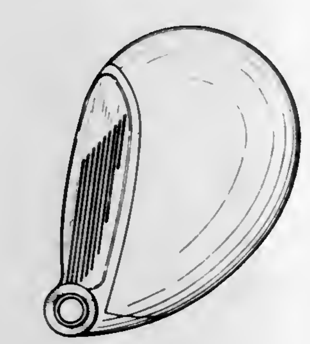

246,735
WHEEL OR THE LIKE
Robert H. C. M. Daenen, Erembodegem, Belgium, assignor to Dart Industries, Inc., Los Angeles, Calif.
Filed Jan. 23, 1975, Ser. No. 543,587
Term of patent 14 years
Int. Cl. D21—*01*
U.S. Cl. D34—15 AJ

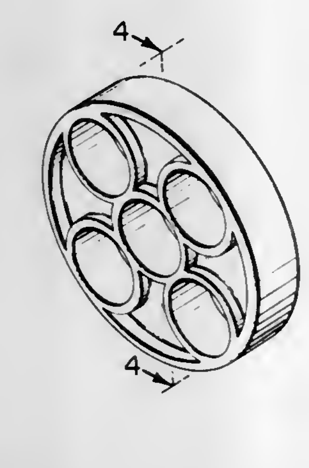

246,736
KITE
Bernard R. Barrett, 308 W. Graham St., Lombard, Ill. 60148, and Alfred D. Duncan, 792 Cambridge, Elmhurst, Ill. 60126
Filed Nov. 26, 1975, Ser. No. 635,445
Term of patent 14 years
Int. Cl. D21—*01*
U.S. Cl. D34—15 AF

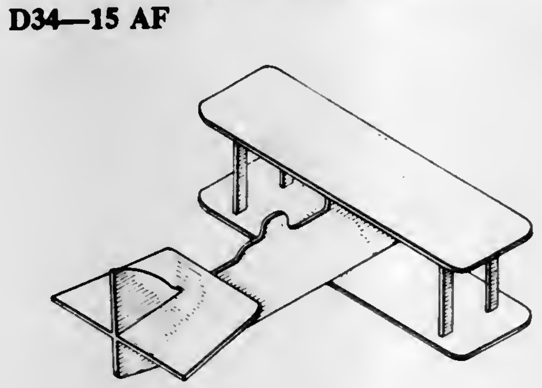

246,737
KITE
Bernard R. Barrett, 308 W. Graham St., Lombard, Ill. 60148, and Alfred D. Duncan, 792 Cambridge, Elmhurst, Ill. 60126
Filed Nov. 26, 1975, Ser. No. 635,721
Term of patent 14 years
Int. Cl. D21—*01*
U.S. Cl. D34—15 AF

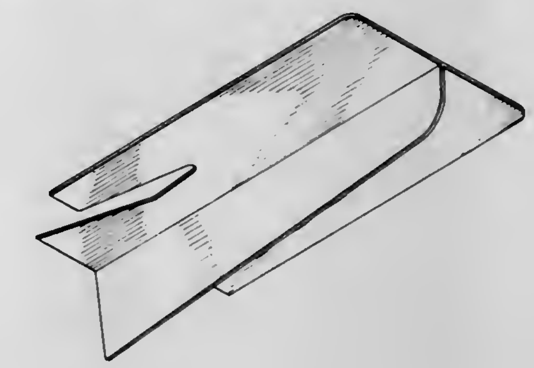

246,738
TOY WHEELED FIGURE
Shinroku Nakao, Yokohama, Japan, assignor to Combi Co., Ltd., Tokyo, Japan
Filed Jan. 6, 1976, Ser. No. 646,915
Term of patent 14 years
Int. Cl. D21—*01*
U.S. Cl. D34—15 B

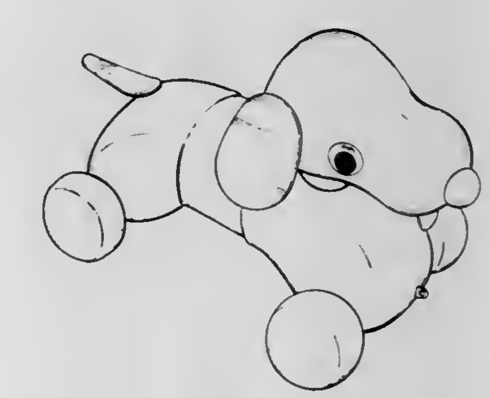

246,739
TOY HOUSE
Michael C. Cartabiano, 1412 Newman Ave., Seekonk, Mass. 02771
Filed Jan. 15, 1976, Ser. No. 649,322
Term of patent 14 years
Int. Cl. D21—*01*
U.S. Cl. D34—15 LL

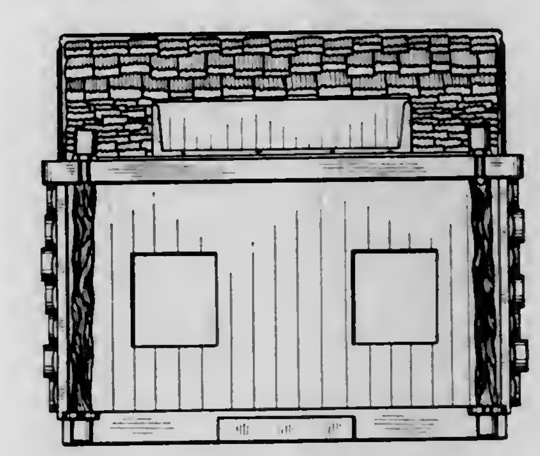

246,740
TOY WHEELED FIGURE
Raymond J. Lohr, 5043 Sterrettania Road, Erie, Pa. 16506
Filed May 18, 1976, Ser. No. 687,609
Term of patent 14 years
Int. Cl. D21—*01*
U.S. Cl. D34—15 D

246,741
PRISMATIC LIGHT-TRANSMITTING PANEL
William W. Korn, Kirkwood, Mo., assignor to K-S-H, Inc.
Filed Jan. 16, 1976, Ser. No. 649,713
Term of patent 14 years
Int. Cl. D26—*05*
U.S. Cl. D48—16 A

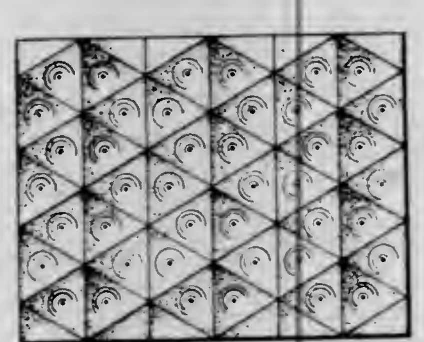

246,742
LAMP SHADE
John Geoffrey Baker, Willowdale, Canada, assignor to Baker-Martin Enterprises Limited
Filed Jan. 21, 1977, Ser. No. 761,240
Term of patent 14 years
Int. Cl. D26—*05*
U.S. Cl. D48—16 R

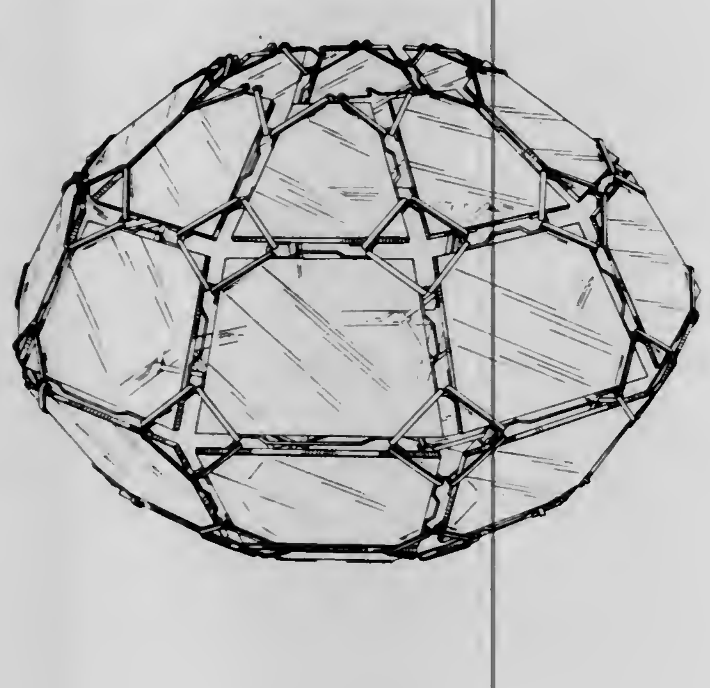

246,743
CHILD'S TOOTH RECEPTACLE
Agnes T. Schulte, 1343 S. Durbin; Anne T. DeWitt, 517 Kirk, and Suzette K. English, 643 E. 17th St., all of Casper, Wyo. 82601
Filed June 16, 1976, Ser. No. 696,681
Term of patent 14 years
Int. Cl. D3—*99*
U.S. Cl. D87—1 R

246,744
PAPER TOWEL DISPENSER
Antonio Macchi Cassia, Milan, Italy, assignor to Steiner American Corporation
Filed June 1, 1976, Ser. No. 691,848
Term of patent 14 years
Int. Cl. D6—*06*; D23—*02*
U.S. Cl. D52—2 C

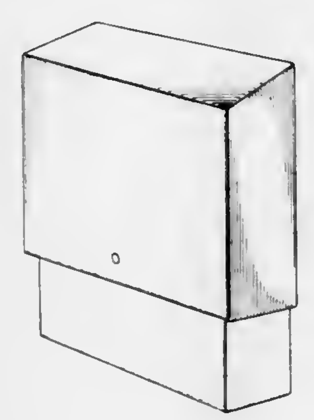

246,745
COIN SORTER
Herbert Charlop, 245 E. 19th St., New York, N.Y. 10003
Filed Apr. 26, 1976, Ser. No. 680,122
Term of patent 7 years
Int. Cl. D19—*02*
U.S. Cl. D52—4 R

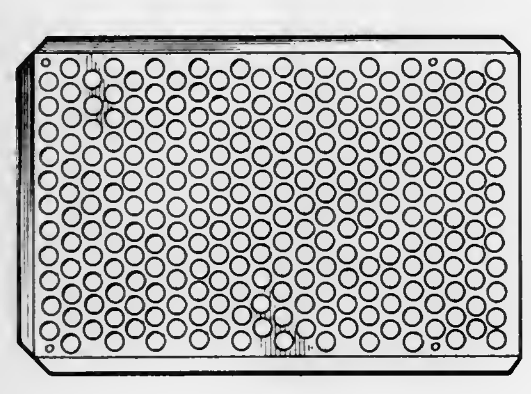

LIST OF PATENTEES

TO WHOM

PATENTS WERE ISSUED ON THE 20TH DAY OF DECEMBER, 1977

NOTE.—Arranged in accordance with the first significant character or word of the name (in accordance with city and telephone directory practice).

A.P.V. Company Limited, The: *See*—
Usher, John Dennis, 4,063,591, Cl. 165-167.000.
Abbott, Bernard J.: *See*—
Fukuda, David S.; Abbott, Bernard J.; and Archer, Robert A., 4,064,009, Cl. 195-51.00R.
Abbott Laboratories: *See*—
Stein, Robert George; Couch, Terry Lee; and Crovetti, Aldo Joseph, 4,064,142, Cl. 260-332.30R.
Abe, Kohei: *See*—
Ishii, Yasuo; Nishimura, Naozumi; and Abe, Kohei, 4,063,510, Cl. 102-23.000.
Abe, Moriaki, to E.D.M. Co., Ltd. Rotary hot-stamping apparatus. 4,063,500, Cl. 101-25.000.
Abe, Nobuhiro: *See*—
Miyano, Seiji; and Abe, Nobuhiro, 4,064,133, Cl. 260-293.790.
Abraham, Gerard; and Bergasse, Gaston, to International Business Machines Corporation. Projection printing system with an improved mask configuration. 4,063,812, Cl. 355-18.000.
ACF Industries, Incorporated: *See*—
Hicks, Paul E., Jr., 4,063,657, Cl. 214-152.000.
Achelpohl, Fritz; and Feldkamper, Richard, to Windmoller & Holscher. Apparatus for storing articles discharged at a high rate from production machines. 4,063,693, Cl. 242-67.10R.
Acieries du Manoir Pompey: *See*—
Thuillier, Jacques; and Hugo, Michel, 4,063,934, Cl. 75-122.000.
Ackrell, Jack, to Syntex (U.S.A.) Inc. Novel esters of 6,11-dihydrodibenzo-[b.e.]-thiepin-11-one-3-alkanoic acids. 4,064,141, Cl. 260-327.00B.
Adam, Jean-Marie, to Ciba-Geigy Corporation. Process for the production of iminopyrrolinones. 4,064,140, Cl. 260-326.5FL.
Adamation, Inc.: *See*—
Perry, Kenneth E., 4,063,634, Cl. 198-478.000.
Adams, George L.: *See*—
Zekulin, Nikita; and Adams, George L., 4,063,457, Cl. 73-290.00V.
Adams, George R.; and Meisenbach, William T., to Armstrong Cork Company. Water removal from fiberboard. 4,063,996, Cl. 162-210.000.
Adams, Guy Emery; and MacPhedran, Donald Alexander, to Solitron Devices, Inc. Impedance ratio varying device. 4,064,474, Cl. 336-139.000.
Adaniya, Takeshi; and Ohmura, Masaru, to Nippon Kokan Kabushiki Kaisha. Chromated electro-galvanized steel sheet excellent in corrosion resistance and process for manufacturing same. 4,064,320, Cl. 428-632.000.
Adler, Franklin P., to Pullman Incorporated. Foot operated latch for hopper cars. 4,063,764, Cl. 292-256.500.
Adolphi, Heinrich; and Bachmann, Gerhard, to BASF Aktiengesellschaft. Halobenzoylpropionate and N,N-diethyl-m-toluamide as insect repellents. 4,064,268, Cl. 424-308.000.
Aeschbacher, Hans Manuel, to Georg Fischer Aktiengesellschaft. Apparatus for removing a mixture of blasting media and cleaning residues from workpieces treated with blasting media. 4,063,329, Cl. 15-306.00A.
Agar Instrumentation Inc.: *See*—
Agar, Joram, 4,063,448, Cl. 73-32.00A.
Agar, Joram, to Agar Instrumentation Inc. Density meter coil assembly. 4,063,448, Cl. 73-32.00A.
Agence Nationale de Valorisation de la Recherche: *See*—
Lewiner, Jacques; and Dreyfus, Gerard, 4,064,539, Cl. 358-128.000.
Agence Nationale de Valorisation de la Recherche (ANVAR): *See*—
Chaussy, Roland; and Paoli, Jean, 4,063,432, Cl. 62-419.000.
Agency of Industrial Science & Technology: *See*—
Fukasawa, Akira, 4,064,035, Cl. 204-290.00R.
AGFA-Gevaert Aktiengesellschaft: *See*—
Himmelmann, Wolfgang; Sobek, Johannes; and Sauerteig, Wolfgang, 4,063,952, Cl. 96-111.000.
Agfa-Gevaert, N.V.: *See*—
Smets, Georges Joseph; and Van De Putte, Jacques Marie, 4,064,078, Cl. 260-2.0EN.
Ahl, Bernard: *See*—
Thoma, Jozsef, 4,063,857, Cl. 425-63.000.
Aiken, Richard D.: *See*—
DuRoss, Robert M.; and Aiken, Richard D., 4,063,631, Cl. 197-142.000.
Air Preheater Company, Inc., The: *See*—
Stockman, Richard Franklin, 4,063,587, Cl. 165-8.000.
Air Products and Chemicals, Inc.: *See*—
Thorogood, Robert Michael, 4,063,588, Cl. 165-97.000.
Aitken, Malcolm T., Jr. Portable mixing device. 4,063,716, Cl. 366-100.000.
Aizawa, Takeshi: *See*—
Yuda, Jiro; Morokoshi, Hiroshi; Hori, Michimasa; Ikoma, Mitsuhiro; and Aizawa, Takeshi, 4,064,420, Cl. 318-224.00A.
Akai, Shin-ichi; Mori, Hideki; Shimoda, Takashi; and Iguchi, Shin-ichi, to Sumitomo Electric Industries, Ltd. Method for growing epitaxial layers on multiple semiconductor wafers from liquid phase. 4,063,972, Cl. 148-171.000.
Akashi, Mitsumasa: *See*—
Kosaka, Yujiro; Nakazawa, Hideaki; Iikuni, Tetsuo; and Akashi, Mitsumasa, 4,064,085, Cl. 260-29.70R.
Akiyoshi, Hiromi: *See*—
Halada, Jumei; Akiyoshi, Hiromi; and Matsunaga, Tsutomu, 4,064,215, Cl. 264-236.000.
Aktiebolaget Broderne Herrmann: *See*—
Edstrom, Lennart, 4,063,476, Cl. 83-37.000.
Aktiebolaget Iggesunds Bruk: *See*—
Stake, Esbjorn Ake, 4,063,579, Cl. 144-246.00R.
Aktiebolaget Stille-Werner: *See*—
Ulinder, Bjorn, 4,063,555, Cl. 128-214.00R.
Aktiebolaget Tudor: *See*—
Groby, Chester, 4,063,977, Cl. 156-69.000.
Akushsky, Izrail Yakovlevich; Burtsev, Vladimir Mikhailovich; Kazangapov, Alken Nurmagambetovich; and Pak, Ivan Timofeevich. Device for multiplying numbers represented in a system of residual classes. 4,064,400, Cl. 364-746.000.
Albrecht, William L.: *See*—
Fleming, Robert W.; Sill, Arthur D.; Albrecht, William L.; and Horgan, Stephen W., 4,064,347, Cl. 544-79.000.
Alcock, Keith Thomas: *See*—
Serban, Alexander; Warner, Richard Burridge; and Alcock, Keith Thomas, 4,064,262, Cl. 424-285.000.
Alder, Wilfried; Huppertz, Josef; Latka, Herbert; and Sperling, Gerhard, to Henkel Kommanditgesellschaft auf Aktien. Process for the manufacture of spray dried detergents containing nonionic tensides. 4,064,063, Cl. 252-135.000.
Alex, Franklin; and Byrne, Joseph Gerald, to University of Utah, The. Nondestructive detection and measurement of hydrogen embrittlement. 4,064,438, Cl. 250-308.000.
Alexandrov, Dmitry Vladimirovich: *See*—
Sosulnikov, Gleb Borisovich; Fomichev, Vladimir Mikhailovich; Tsiporina, Ljudmila Alexandrovna; Selivanov, Mikhail Prokhorovich; Bobrakov, Lev Vladimirovich; Axenov, Alexandr Sergeevich; Alexandrov, Dmitry Vladimirovich; Ugrjumov, Maxim Semenovich, deceased; Ugrjumova, Raida Nikolaevna, administratrix; Ugrjumov, Nikolai Maximovich, administrator; and Tjumina, Lidia Maximovna, administratrix, 4,063,568, Cl. 137-270.000.
Alke, Roger J.: *See*—
Kipple, Harry P.; Alke, Roger J.; and Price, Charles E., 4,063,532, Cl. 118-429.000.
Allen-Bradley Company: *See*—
Kouchich, Allan V.; and Marshall, Robert, 4,064,475, Cl. 338-20.000.
Allen, Bruce S., to American Chain & Cable Company, Inc. Electronic digital process controller having simulated analog control functions. 4,064,394, Cl. 364-107.000.
Allen, Charles H., to Batteries Unlimited, Inc. Auxiliary dual battery terminal. 4,064,328, Cl. 429-121.000.
Allen Group, Inc., The: *See*—
Barber, Ivan J., 4,063,327, Cl. 15-53.0AB.
Allen, Robert L., to General Motors Corporation. Turbomachine stator interstage seal. 4,063,845, Cl. 415-134.000.
Alliance Manufacturing Company, Inc., The: *See*—
Russell, James B.; Zewe, James R.; and Fruhwald, John M., 4,064,487, Cl. 340-168.00S.
Allied Chemical Corporation: *See*—
Schwartz, Judd Leonard; and Mayer, Richard Eugene, 4,064,298, Cl. 428-95.000.
Allis-Chalmers Corporation: *See*—
Grubb, Robert G., 4,063,675, Cl. 228-178.000.
Takeuchi, Masaaki, 4,063,875, Cl. 432-106.000.
Alloy Trading Co., Ltd.: *See*—
Nagase, Ikuo; and Sun, Park Hee, 4,063,936, Cl. 75-141.000.
Alon, Alexander, to IMI (TAMI) Institute for Research and Development. Removal of dissolved organic matter from acidic aqueous solution. 4,064,220, Cl. 423-321.00R.
Altenburger, Otto, to Stromberg-Carlson Corporation. Systems for and methods for PBX toll restriction. 4,064,372, Cl. 179-18.0DA.
Altman, Richard M.: *See*—
McLaughlin, Thomas D.; and Altman, Richard M., 4,064,516, Cl. 354-31.000.

Aluminum Company of America: *See*—
  Bergmann, Werner J.; and Worden, John A., 4,063,677, Cl. 228-242.000.
Amchem Products, Inc.: *See*—
  Drach, John E.; and Pendell, Barry J., 4,064,163, Cl. 260-502.40R.
American Air Filter Company, Inc.: *See*—
  Mutchler, Paul, 4,063,750, Cl. 280-479.000.
American Chain & Cable Company, Inc.: *See*—
  Allen, Bruce S., 4,064,394, Cl. 364-107.000.
American Components Inc.: *See*—
  Thompson, Edward E., 4,064,477, Cl. 338-51.000.
American Cyanamid Company: *See*—
  Hillard, Ray Leonard; and Hardy, William Baptist, 4,064,102, Cl. 260-45.80N.
  Kirby, Jane Parsons; and Borders, Donald Bruce, 4,064,012, Cl. 195-80.00R.
  Marwood, Ronald Keith, 4,063,638, Cl. 206-63.300.
  Parekh, Girish Girdhar, 4,064,191, Cl. 260-850.000.
  Rabinowitz, Robert; and Welcher, Richard Parke, 4,064,333, Cl. 526-77.000.
  Rauhut, Michael McKay; and Semsel, Andrew Milo, 4,064,064, Cl. 252-188.3CL.
  Stretanski, Joseph Anthony; and Grosso, Vincent Gerard, 4,064,106, Cl. 260-45.95C.
  Van Zandt, Richard Taylor, 4,064,428, Cl. 362-34.000.
American Home Products Corporation: *See*—
  Husbands, George E. M., 4,064,165, Cl. 260-514.00D.
American Medical Systems, Inc.: *See*—
  Klatt, William M.; Graves, Wayne H.; and Buuck, Robert E., 4,063,548, Cl. 128-2.00R.
American Optical Corporation: *See*—
  Laurin, Bernard L., 4,064,308, Cl. 428-410.000.
American Seating Company: *See*—
  Van Ryn, Arthur Louis; Van Loo, William Rudolph; and Raymond, David William, 4,063,392, Cl. 52-9.000.
Ammco Tools, Inc.: *See*—
  Mitchell, Wallace F.; and Evans, Clifford A., 4,063,342, Cl. 29-227.000.
AMP Incorporated: *See*—
  Dittmann, Larry Eugene, 4,063,794, Cl. 339-230.00R.
Amsbury, Clifford Roy; and Warren, Eric, to Rolls-Royce Limited. Measuring instrument. 4,063,362, Cl. 33-147.00J.
Amsler, Joachim, to Sprecher & Schuh AG. Arc electrode, especially for a contact arrangement in a vacuum switch. 4,064,384, Cl. 200-144.00B.
Anderegg, Hans Rudolf; and Muller, Karl, to Gebrueder Buehler AG. Switching connector for pipes, particularly for pneumatic conveying. 4,063,572, Cl. 137-862.000.
Andersen, Poul H., to Chrysler Corporation. Relay adapter circuit for trailer lamps. 4,064,413, Cl. 315-77.000.
Andersen, Robert P.: *See*—
  Wuchinich, David G.; Broadwin, Alan; and Andersen, Robert P., 4,063,557, Cl. 128-276.000.
Anderson, Arnold L., to Velsicol Chemical Corporation. Plastic compositions. 4,064,105, Cl. 260-45.75B.
Anderson, David K.; and Stewart, Marvin A., to Chevron Research Company. Apparatus for separating oil-water mixtures. 4,064,054, Cl. 210-536.000.
Anderson, Franklin T., to Co-Operative Industries, Inc. Self-locking connector. 4,063,756, Cl. 285-84.000.
Anderson, Paul S.; Christy, Marcia E.; and Ponticello, Gerald S., to Merck & Co., Inc. Substituted 9,10-dihydroanthracen-9,10-imines. 4,064,139, Cl. 260-313.100.
Anderson, Randall H.: *See*—
  Borsuk, Leslie M.; Anderson, Randall H.; Grimsby, Emerson A.; and Malsberger, Robert F., 4,063,351, Cl. 29-629.000.
Anderson, Ray H.: *See*—
  Saari, Albert L.; and Anderson, Ray H., 4,064,138, Cl. 548-344.000.
Anderson, Richard A.: *See*—
  Bakken, Gordon J.; and Anderson, Richard A., 4,063,787, Cl. 308-26.000.
Anderson, Roland N. Surface effect vehicle. 4,063,611, Cl. 180-119.000.
Ando, Hisashige: *See*—
  Takezono, Takashi; and Ando, Hisashige, 4,064,483, Cl. 340-146.1AL.
Andrea, Christo, to Combustion Engineering, Inc. Nuclear reactor core servicing apparatus. 4,064,000, Cl. 176-30.000.
Andrews, Peter: *See*—
  Wollweber, Hartmund; Niemers, Ekkehard; Schulz, Hans Peter; Thomas, Herbert; and Andrews, Peter, 4,064,270, Cl. 424-324.000.
Angelle, Philippe: *See*—
  Lepetit, Marc; Angelle, Philippe; Bodin, Jacques; and du Boisbaudry, Dominique, 4,064,504, Cl. 340-347.00P.
Angelucci, Joseph L.: *See*—
  Angelucci, Thomas L.; and Angelucci, Joseph L., 4,064,552, Cl. 361-414.000.
Angelucci, Thomas L.; and Angelucci, Joseph L. Multilayer flexible printed circuit tape. 4,064,552, Cl. 361-414.000.
Anolick, Colin; and Kutsch, Howard James, to Du Pont de Nemours, E. I., and Company. Guard rail. 4,063,713, Cl. 256-13.100.
Anthony, Thomas R.; and Cline, Harvey E., to General Electric Company. Method for forming spaced electrically isolated regions in a body of semiconductor material. 4,063,966, Cl. 148-1.500.
Anthony, Thomas R.: *See*—
  Cline, Harvey E.; and Anthony, Thomas R., 4,063,965, Cl. 148-1.500.
Anthony, Wilson Brady, to Feeds and Feeding Research, Inc. Process to hydrate and enrich whole grains for livestock. 4,064,275, Cl. 426-53.000.
Aoki, Keiji, to Toyota Jidosha Kogyo Kabushiki Kaisha. Solid electrolyte type air-fuel ratio detector. 4,063,897, Cl. 23-254.00E.
Apex Pattern Company: *See*—
  Hantke, Helmut, 4,063,477, Cl. 83-40.000.
Applied Materials, Inc.: *See*—
  Atkisson, James B., Jr., 4,064,423, Cl. 364-718.000.
Applied Science Laboratories, Inc.: *See*—
  Kruppa, Richard F.; and Coleman, Arthur Edward, 4,063,911, Cl. 55-67.000.
Arbogast, Vernon E. Cable take up load binder. 4,063,712, Cl. 254-164.000.
Archer, Robert A.: *See*—
  Fukuda, David S.; Abbott, Bernard J.; and Archer, Robert A., 4,064,009, Cl. 195-51.00R.
Arlt, Dieter; and Bremen, Josef, to Bayer Aktiengesellschaft. Process for the production of autocrosslinkable polymers containing n-alkoxymethyl groups. 4,064,110, Cl. 260-75.0NB.
Arman, Dario. Laminate support for windshield wiper blades. 4,063,328, Cl. 15-250.420.
Armstrong Cork Company: *See*—
  Adams, George R.; and Meisenbach, William T., 4,063,996, Cl. 162-210.000.
Arthur, Jett C., Jr.: *See*—
  Mares, Trinidad; Arthur, Jett C., Jr.; and Harris, James A., 4,063,885, Cl. 8-115.700.
Arvin Industries, Inc.: *See*—
  Stratton, Boyd Lehman, 4,064,544, Cl. 360-99.000.
Arya, Satya Prakash; and Godsin, Walter Woodrow, to General Atomic Company. Method and apparatus for cleaning nuclear fuel elements. 4,063,962, Cl. 134-8.000.
ASA S.A.: *See*—
  Venot, Jean, 4,063,697, Cl. 242-131.000.
Asakawa, Toshiro; Ishida, Atsuo; and Hayashi, Shizuo, to Kao Soap Co., Ltd. Dentifrice composition. 4,064,231, Cl. 424-52.000.
Asao, Yasuo: *See*—
  Yokotsuka, Tamotsu; Asao, Yasuo; Matsuura, Masaru; and Hashimoto, Hikotaka, 4,064,277, Cl. 426-331.000.
Ashley, Eugene, to General Electric Company. Liquid propellant weapon system. 4,063,486, Cl. 89-7.000.
Associated Data Concepts: *See*—
  Saylor, William H.; and Narey, James O., 4,064,502, Cl. 340-324.00R.
  Saylor, William H.; and Narey, James O., 4,064,503, Cl. 340-325.000.
Atkisson, James B., Jr., to Applied Materials, Inc. Digital system and method for generating analog control signals. 4,064,423, Cl. 364-718.000.
Atlas Copco Aktiebolag: *See*—
  Hansson, Gunnar Christer, 4,063,625, Cl. 192-17.00R.
Attaway, Julian J., to MM Systems Corporation. Omni-panel structure. 4,063,396, Cl. 52-489.000.
Aufderhaar, Ernst: *See*—
  Varsanyi, Denis V.; Aufderhaar, Ernst; and Schweizer, Ernst, 4,064,265, Cl. 424-300.000.
Auge, Wolfgang: *See*—
  Thelen, Bernd; Auge, Wolfgang; and Thiem, Karl-Werner, 4,064,147, Cl. 260-369.000.
Augstein, Joachim; Cairns, Hugh; Hunter, Dennis; and King, John, to Fisons Limited. Benzopyranyltetrazoles as antiasthma agents. 4,064,256, Cl. 424-269.000.
August Storck KG.: *See*—
  Oberwelland, Hugo; and Klahn, Uwe, 4,063,864, Cl. 425-433.000.
Auskova, Marie: *See*—
  Semonsky, Miroslav; Cerny, Antonin; Krajcrova, Marie; Rezabeck, Karel; Auskova, Marie; Seda, Miroslav; Sevcik, Bohumil; and Kral, Josef, 4,064,130, Cl. 260-285.500.
Austin, Carl F.: *See*—
  Leonard, Guy W.; and Austin, Carl F., 4,063,509, Cl. 102-20.000.
Automation Industries, Inc.: *See*—
  Choiniere, Alcide W.; Kutnyak, Thomas A.; and Dunn, George T., 4,063,988, Cl. 156-429.000.
Automotive Products Limited: *See*—
  Hanson, William Michael; and Price, Basil Robert, 4,063,834, Cl. 403-138.000.
Avtex Fibers Inc.: *See*—
  Smith, Frederick R., 4,063,558, Cl. 128-284.000.
Axen, Udo F., to Upjohn Company, The. 2,2-Difluoro-16-phenoxy-13,14 dihydro-PGE, analogs. 4,064,160, Cl. 560-53.000.
Axenov, Alexandr Sergeevich: *See*—
  Sosulnikov, Gleb Borisovich; Fomichev, Vladimir Mikhailovich; Tsiporina, Ljudmila Alexandrovna; Selivanov, Mikhail Prokhorovich; Bobrakov, Lev Vladimirovich; Axenov, Alexandr Sergeevich; Alexandrov, Dmitry Vladimirovich; Ugrjumov, Maxim Semenovich, deceased; Ugrjumova, Raida Nikolaevna, administratrix; Ugrjumov, Nikolai Maximovich, administrator; and Tjumina, Lidia Maximovna, administratrix, 4,063,568, Cl. 137-270.000.
Axer, Heinrich; Michels, Wolfgang; and Ufermann, Werner, to G. Siempelkamp & Co. Layer-forming apparatus, especially for the preparation of particle-board mats. 4,063,858, Cl. 425-81.000.

Ayers, Orval E.: *See*—
  Chew, William M.; Ayers, Orval E.; Murfree, James A.; and Martignoni, Pasquale, 4,064,225, Cl. 423-648.00R.
AZS Corporation: *See*—
  Zvejnieks, Andrejs, 4,063,780, Cl. 299-2.000.
B A Installationsutveckling AB: *See*—
  Persson, Bengt Arne, 4,063,827, Cl. 401-10.000.
B. F. Goodrich Company, The: *See*—
  Tolan, Peter John, 4,063,322, Cl. 9-8.00R.
Babb, Edward, to International Computers Limited. Apparatus for searching compressed data file. 4,064,489, Cl. 364-200.000.
Babil, Simon; Claar, James A.; and Temple, Rodger G., to PPG Industries, Inc. In-situ production of microcapsules on a substrate. 4,064,294, Cl. 427-373.000.
Bachmann, Gerhard: *See*—
  Adolphi, Heinrich; and Bachmann, Gerhard, 4,064,268, Cl. 424-308.000.
Bachmayer, Helmut; and Schmidt, Gerhard, to Sandoz Ltd. Process for isolating the immunogenic components of influenza viruses. 4,064,232, Cl. 424-89.000.
Bacvarov, Dosio C., to I-T-E Imperial Corporation. Drum for transportation of flexible electric power cable. 4,063,691, Cl. 242-54.00R.
Badger, John P.; and Simonton, Robert D., to Eltra Corporation. Battery separator assembly machine. 4,063,978, Cl. 156-82.000.
Badische Anilin- & Soda-Fabrik, Aktiengesellschaft: *See*—
  Schoenafinger, Eduard; Schwarzmann, Matthias; and Koester, Eberhard, 4,064,292, Cl. 427-132.000.
Bahre, Karl; and Krohm, Reinhold, to Klockner-Werke AG. Long wall mining apparatus guide structure. 4,063,782, Cl. 299-34.000.
Bailey Meter Company: *See*—
  Fisher, Edward William, 4,063,898, Cl. 23-254.00E.
Baines, John Eric: *See*—
  Wain, Alan James Bradley; Boot, Frank Lyn; and Baines, John Eric, 4,063,976, Cl. 156-44.000.
Baker, W. Barry; and Clark, Donald G., to Du Pont de Nemours, E. I., and Company. Chemical dosimeter having a constant flow air sampling pump. 4,063,824, Cl. 417-43.000.
Bakken, Gordon J.; and Anderson, Richard A., to Thiokol Corporation. Cylindrical, flexible bearings. 4,063,787, Cl. 308-26.000.
Balinski, Henry A.; and Grupe, Robert C., Jr., to United States Gypsum Company. Ceiling system. 4,063,391, Cl. 52-1.000.
Ball Packaging Products, Inc.: *See*—
  Zappia, Anthony T., 4,063,918, Cl. 65-229.000.
Ban, Stephan C. Flow regulator and system. 4,063,571, Cl. 137-599.100.
Ban, Stephan C. Lockable and separable pivotal connector joint. 4,063,830, Cl. 403-3.000.
Bane, Phillip A. Grade level. 4,063,366, Cl. 33-396.000.
Bankert, Richard D.: *See*—
  Simpson, James W.; Cosgarea, Andrew, Jr.; and Bankert, Richard D., 4,063,346, Cl. 29-527.700.
Barber, Ivan J., to Allen Group, Inc., The. Vehicle washing apparatus with improved rear washer. 4,063,327, Cl. 15-53.0AB.
Bargain, Michel, to Rhone-Poulenc S.A. Heat-stable polyimide resins. 4,064,192, Cl. 260-857.0UN.
Bargain, Michel, to Rhone-Poulenc S.A. Heat-resistant polymers based on polyamines and oligomers possessing imide groups with unsaturated polyester. 4,064,193, Cl. 260-857.0PE.
Barkan, Philip, to General Electric Company. Vacuum circuit breaker with improved means for limiting overtravel of movable contact at end of opening stroke. 4,064,383, Cl. 200-144.00B.
Barkley, George G.; and Sorice, Edward L., to Kennametal Inc. Adjustable boring bar. 4,063,842, Cl. 408-146.000.
Barkley, George G.; Cmar, John A., Jr.; and McCreery, Howard J., to Kennametal Inc. Adjustable boring bar. 4,063,843, Cl. 408-146.000.
Baron, Arthur L.; and Sivaramakrishnan, Parameswar, to Mobay Chemical Corporation. Modified aromatic polycarbonates. 4,064,195, Cl. 260-860.000.
Baron, Neville A. Method and apparatus for sterilizing and storing contact lenses. 4,063,890, Cl. 21-54.00R.
Barracudaverken AB: *See*—
  Wallin, Erik W., 4,064,305, Cl. 428-246.000.
Barton, Derek H. R.; and Hesse, Robert H., to Research Institute for Medicine and Chemistry Inc. Chemical process for preparing Δ9(11) dehydrosteroids. 4,064,148, Cl. 260-397.450.
BASF Aktiengesellschaft: *See*—
  Adolphi, Heinrich; and Bachmann, Gerhard, 4,064,268, Cl. 424-308.000.
  Cordes, Claus; and Sterzel, Hans-Josef, 4,064,103, Cl. 260-45.90D.
  Faulhaber, Gerhard; Fuetterer, Hugo; Petersen, Harro; and Schwab, Hermann, 4,063,879, Cl. 8-2.50A.
  Merger, Franz; Nestler, Gerhard; Oppenlaender, Knut; Uhl, Guenter; and Wissler, Ruediger, 4,064,309, Cl. 428-413.000.
  Scholz, Heinrich; Decker, Martin; and Neumayr, Franz, 4,064,218, Cl. 423-240.000.
  von Lauff, Hans Peter; Fabian, Wolfgang; and Hellstern, Heidrun, 4,063,957, Cl. 106-304.000.
  Weitz, Hans-Martin; and Fischer, Rolf, 4,064,124, Cl. 260-250.00B.
  Zeitler, Gerhard; Hoehr, Lothar; and Mueller-Tamm, Heinz, 4,064,198, Cl. 260-878.00R.
Bates, Ronald E., to Tennis-Tee, Inc. Tennis racquet swing training device. 4,063,730, Cl. 273-29.00A.
Batra, Vijay, to Morse Shoe, Inc. Air-flow shoe. 4,063,371, Cl. 36-3.00B.
Battcock, Whalley Vowe, to Coal Industry (Patents) Limited. Heat exchanger assemblies. 4,063,589, Cl. 165-104.00F.
Batteries Unlimited, Inc.: *See*—
  Allen, Charles H., 4,064,328, Cl. 429-121.000.
Battocletti, Frank E., to North Electric Company. Method and apparatus for path testing in a time division multiplex switching network. 4,064,369, Cl. 179-15.0BF.
Bauer, James J.; and Hoechst, Lonnie D., to Clark Equipment Company. Parallel linkage with pivoted translating link. 4,063,832, Cl. 403-54.000.
Baujat, Jacques, to Commissariat a l'Energie Atomique. Device for supporting a nuclear boiler. 4,064,005, Cl. 176-87.000.
Baxter, William D., to Bunker Ramo Corporation. Master keyboard terminal with auxiliary keyboard terminal capability. 4,064,560, Cl. 364-900.000.
Bay Mills Limited: *See*—
  Scotchmer, Stephen R.; and MacGregor, Robert D., 4,064,306, Cl. 428-255.000.
Bayer Aktiengesellschaft: *See*—
  Arlt, Dieter; and Bremen, Josef, 4,064,110, Cl. 260-75.0NB.
  Becker, Wolf-Jurgen; and Ruse, Alois, 4,063,891, Cl. 23-230.0PC.
  Sirrenberg, Wilhelm; Schramm, Jurgen; Klauke, Erich; Hammann, Ingeborg; and Stendel, Wihelm, 4,064,267, Cl. 424-304.000.
  Thelen, Bernd; Auge, Wolfgang; and Thiem, Karl-Werner, 4,064,147, Cl. 260-369.000.
  Wollweber, Hartmund; Niemers, Ekkehard; Schulz, Hans Peter; Thomas, Herbert; and Andrews, Peter, 4,064,270, Cl. 424-324.000.
Bayer, Horst O.; Swithenbank, Colin; and Yih, Roy Y., to Rohm and Haas Company. Herbicidal 4-trifluoromethyl-4'nitrodiphenyl ethers. 4,063,929, Cl. 71-115.000.
Bayliss, John A., to Intel Corporation. Custom watch. 4,063,409, Cl. 58-23.00R.
Bazin, Lucas John: *See*—
  Schneider, Dennis Michael; and Bazin, Lucas John, 4,064,541, Cl. 358-153.000.
Beattie, Thomas R.; and Christensen, Burton G., to Merck & Co., Inc. 7-Methoxy-3-phosphoranylidenemethyl-cephalosporins. 4,064,344, Cl. 544-21.000.
Beck, Henry E.; Hasten, Jimmie L.; and Sindelar, Ernest C., to Caterpillar Tractor Co. High-reliability air brake system with transmission neutralizer providing a plurality of operational modes. 4,063,624, Cl. 192-4.00A.
Beck, Kurt-Gunther; Rohde, Wolfgang; Stalherm, Dieter; and Kolitz, Volker, to Bergwerksverband GmbH. Method of operating coke ovens. 4,064,017, Cl. 201-1.000.
Beck, Robert William: *See*—
  Howell, James Damron; Beck, Robert William; Bruce, George Hayden; and McLain, John David, 4,063,602, Cl. 175-7.000.
Becker, Franz; and Jager, Philipp, to Siemens Aktiengesellschaft. Method for the generation of hydrogen. 4,064,226, Cl. 423-657.000.
Becker, Rudolf, to Bekum Maschinenfabriken GmbH. Apparatus for extrusion of tubular parisons. 4,063,865, Cl. 425-467.000.
Becker, Wolf-Jurgen; and Ruse, Alois, to Bayer Aktiengesellschaft; and Hartmann & Braun Aktiengesellschaft. Method for determining the inorganic carbon content of aqueous liquids. 4,063,891, Cl. 23-230.0PC.
Beckman Instruments, Inc.: *See*—
  Morales, Michael John; and Reeves, George I., 4,064,450, Cl. 324-15.000.
  Neti, Radhakrishna Murty; and Roggenkamp, Ray Lawrence, 4,063,895, Cl. 23-232.00R.
Becton, Dickinson and Company: *See*—
  Kippel, Edward A.; and Huston, Paul O., 4,063,913, Cl. 55-274.000.
Beeson, Frank C. Self-contained fire package. 4,063,904, Cl. 44-40.000.
Behring, James A., to Grede Foundries, Inc. Cupola charge material. 4,063,944, Cl. 75-256.000.
Bekum Maschinenfabriken GmbH: *See*—
  Becker, Rudolf, 4,063,865, Cl. 425-467.000.
Bell & Howell Company: *See*—
  Karsh, Herbert, 4,063,553, Cl. 128-214.00F.
Bell Telephone Laboratories, Incorporated: *See*—
  Coonce, Homer Eugene; Synnott, Judson Bruce, III; and Harty, Austin Thomas, deceased, 4,064,370, Cl. 179-15.0BA.
  Kustka, George John; and Mueller, Kurt Hugo, 4,064,361, Cl. 178-69.100.
  Shenk, Walter James, 4,063,617, Cl. 184-15.00R.
Beloit Corporation: *See*—
  Zitzow, Clarence R., 4,063,531, Cl. 118-122.000.
Bendix Corporation, The: *See*—
  Blackington, Paul Albert, 4,064,415, Cl. 315-209.00T.
  Borden, Raymond Walter; and DeBard, James Edward, 4,063,348, Cl. 29-588.000.
Benedict, Mark C. Golf club. 4,063,733, Cl. 273-80.00C.
Beningson, Herbert E.: *See*—
  Beningson, Robert M.; Beningson, Herbert E.; Menon, Narayanankutty V. P.; Nadkarni, Ravindra M.; Lamb, Thomas J.; Fox, Lee K.; and Keary, William V., 4,063,903, Cl. 44-2.000.
Beningson, Robert M.; Beningson, Herbert E.; Menon, Narayanankutty V. P.; Nadkarni, Ravindra M.; Lamb, Thomas J.; Fox, Lee K.; and Keary, William V., to Combustion Equipment Associates Inc. Apparatus for disposal of solid wastes and recovery of fuel product therefrom. 4,063,903, Cl. 44-2.000.
Benton, Reuben Paul; and Schreyer, Kenneth D., to Columbus McKinnon Corporation. Chain coupling device and method of manufacture thereof. 4,063,413, Cl. 59-35.0CP.
Beregi, Laszlo; Hugon, Pierre; Duhault, Jacques; and Boulanger, Mi-

chelle, to Science Union et Cie, Societe Francaise de Recherche Medicale. N-Phenoxyphenyl-piperazines. 4,064,245, Cl. 424-250.000.
Beres, Steve W.: *See—*
Hayes, Thomas H.; and Beres, Steve W., 4,063,854, Cl. 417-552.000.
Beretsky, Irwin; and Lichtenstein, Bernard, to Technicon Instruments Corporation. Ultrasonic method and apparatus for imaging and characterization of bodies. 4,063,549, Cl. 128-2.00V.
Bergasse, Gaston: *See—*
Abraham, Gerard; and Bergasse, Gaston, 4,063,812, Cl. 355-18.000.
Berger, Alfred: *See—*
De Vos, Daniel; Michel, Paul-Marie; and Berger, Alfred, 4,063,916, Cl. 65-21.000.
Berger & Gorin, Inc.: *See—*
Smilow, George; and Kayen, Samuel L., 4,063,669, Cl. 223-87.000.
Bergeson, Haven E.; and Fuller, Mark W., to FBW Enterprises. Apparatus for simulating the light produced by a fire. 4,064,414, Cl. 315-208.000.
Bergin, Thomas Michael: *See—*
Canterman, David; and Bergin, Thomas Michael, 4,063,645, Cl. 209-122.000.
Bergles, Eduard, to Fichtel & Sachs AG. Multiple speed hub for a vehicle wheel. 4,063,469, Cl. 74-781.00B.
Bergmann, Werner J.; and Worden, John A., to Aluminum Company of America. Method of welding members together. 4,063,677, Cl. 228-242.000.
Bergstein, Frank David; Nerenberg, Robert W.; and Shiverdecker, James H., to Bergstein Packaging Trust. Carton closing and sealing apparatus. 4,063,403, Cl. 53-379.000.
Bergstein Packaging Trust: *See—*
Bergstein, Frank David; Nerenberg, Robert W.; and Shiverdecker, James H., 4,063,403, Cl. 53-379.000.
Shiverdecker, James H., 4,063,983, Cl. 156-306.000.
Bergwerksverband GmbH: *See—*
Beck, Kurt-Gunther; Rohde, Wolfgang; Stalherm, Dieter; and Kolitz, Volker, 4,064,017, Cl. 201-1.000.
Berkoz, Belig M.; Lewis, Brian; and Muchowski, Joseph M., to Syntex (U.S.A.) Inc. Certain thiazole-5-carboxamide compounds. 4,064,135, Cl. 260-302.00S.
Berkoz, Belig M.; Lewis, Brian; and Unger, Stefan H., to Syntex (U.S.A.) Inc. Thiazole cardiovascular agents. 4,064,257, Cl. 424-270.000.
Berkoz, Belig M.; Lewis, Brian; and Unger, Stefan H., to Syntex (U.S.A.) Inc. Thiazole cardiovascular agents. 4,064,259, Cl. 424-270.000.
Bernard, Steven: *See—*
Schneider, Barry; and Bernard, Steven, 4,063,665, Cl. 222-129.000.
Bernreiter, George; and Truxa, Leslie. Method and apparatus for waste water treatment. 4,064,047, Cl. 210-96.00R.
Bernstein, Kenneth L.; Considine, Philip S.; and Parrent, George B., Jr., to Technical Operations, Incorporated. Photographic imaging. 4,063,799, Cl. 350-162.0SF.
Besson, Louis A., to Chabas & Besson S.A. Apparatus for calibrating and surfacing tubes. 4,063,439, Cl. 72-45.000.
Best, Robert H.; and Harris, William D., to Burlington Industries, Inc. Means for improving ionization efficiency of high-voltage grid systems. 4,064,548, Cl. 361-229.000.
Bevilacqua, Albert, to M I Systems, Inc. Method of making electrode package. 4,063,352, Cl. 29-630.00R.
Bhangu, Jagnandan Kumar, to Rolls-Royce Limited. Laminated materials. 4,064,300, Cl. 428-120.000.
BICC Limited: *See—*
Parr, David Turner, 4,064,216, Cl. 264-263.000.
Biek, Paul Albert, to Dresser Industries, Inc. Rotary impact tool. 4,063,601, Cl. 173-93.600.
Bio-Response, Inc.: *See—*
Rose, Sam, 4,064,006, Cl. 195-1.800.
Biological Developments, Inc.: *See—*
Gross, Stanley Joseph, 4,064,228, Cl. 424-1.000.
Birchall, George Richard; Harney, Donald William Gerald; and Forsyth, Bruce Adam, to ICI Australia Limited. Compositions for killing internal parasites containing 3-tert-alkyl-4-hydroxy-5-halo-benzylidene-malonitriles. 4,064,266, Cl. 424-304.000.
Bischoff, Robert F., Jr. Mechanism for holding fasteners. 4,063,580, Cl. 145-51.000.
Bishop, George W.: *See—*
Sloyan, Jerome J., 4,063,420, Cl. 60-671.000.
Bivans, David A.; and Duncan, Gary L., to Mobil Oil Corporation. Maleic anhydride-modified polymer lager coated with polymeric composition derived from vinylidene chloride. 4,064,315, Cl. 428-518.000.
Blackington, Paul Albert, to Bendix Corporation, The. Inductive spark ignition for combustion engine. 4,064,415, Cl. 315-209.00T.
Blackmore, Donald W. Holder for storing bicycles and the like. 4,063,647, Cl. 211-19.000.
Blackwell, Jennings P., to Phillips Petroleum Company. Corrosion-inhibiting poly(arylene sulfide) coating compositions. 4,064,084, Cl. 260-29.20R.
Block, Philip L.; and Derdivanis, John P. Dental plaque disclosing agent. 4,064,229, Cl. 424-7.000.
Bluethman, Robert Glenn; McBride, Michael Eudell; and Rogers, Wayne Finis, to International Business Machines Corporation. System for merging data flow. 4,064,557, Cl. 364-900.000.
Blum, Helmut; and Worms, Karl-Heinz, to Henkel Kommanditgesellschaft auf Aktien. 1,3-Di-amino-alkane-1,1-diphosphonic acids and salts. 4,064,164, Cl. 260-502.500.
Blumenberg, Horst H.; and Guzowski, Kenneth A., to Zenith Radio Corporation. Method of manufacturing a unitized in-line electron gun. 4,063,340, Cl. 29-25.160.
Boal, Delbert L.: *See—*
Heaney, Donald F.; and Boal, Delbert L., 4,064,050, Cl. 210-293.000.
Bobrakov, Lev Vladimirovich: *See—*
Sosulnikov, Gleb Borisovich; Fomichev, Vladimir Mikhailovich; Tsiporina, Ljudmila Alexandrovna; Selivanov, Mikhail Prokhorovich; Bobrakov, Lev Vladimirovich; Axenov, Alexandr Sergeevich; Alexandrov, Dmitry Vladimirovich; Ugrjumov, Maxim Semenovich, deceased; Ugrjumova, Raida Nikolaevna, administratrix; Ugrjumov, Nikolai Maximovich, administrator; and Tjumina, Lidia Maximovna, administratrix, 4,063,568, Cl. 137-270.000.
Bocher, Dominique; and Pilet, Charles. Antibiotic composition containing an antibiotic and as a potentiating agent pyrrolidone carboxylic acid or derivative thereof. 4,064,238, Cl. 424-227.000.
Bochkarev, Ellin Petrovich; Maslov, Vadim Nikolaevich; Voronin, Nikolai Georgievich; Korobov, Oleg Evgenievich; and Gavrilin, Eduard Ivanovich. Device for epitaxial growing of semiconductor periodic structures from gas phase. 4,063,529, Cl. 118-49.100.
Bodin, Jacques: *See—*
Lepetit, Marc; Angelle, Philippe; Bodin, Jacques; and du Boisbaudry, Dominique, 4,064,504, Cl. 340-347.00P.
Bodysonic Kabushiki Kaisha: *See—*
Yamada, Kyota, 4,064,376, Cl. 179-146.00H.
Boehm, Lawrence O. Illuminated flasher cane of round hollow plastic tubing or the like. 4,064,429, Cl. 362-102.000.
Boeing Company, The: *See—*
Carolan, Raymond Jerome; and Kristoffersen, Bjorn Roar, 4,063,315, Cl. 4-10.000.
Moji, Yukimori, 4,064,020, Cl. 204-38.00E.
Boey, Jozef Martin: *See—*
Janssen, Paul Adriaan Jan; Van Daele, Georges Henri Paul; and Boey, Jozef Martin, 4,064,132, Cl. 260-293.620.
Bogg, Thomas George, to Ciba-Geigy AG. Manufacture of tabular habit silver halide crystals for photographic emulsions. 4,063,951, Cl. 96-94.00R.
Boldrin, Luigi. Soil cultivator. 4,063,598, Cl. 172-705.000.
Bolin, Philip C., to Westinghouse Electric Corporation. Gas insulated transmission line with particle trap. 4,064,353, Cl. 174-14.00R.
Bolyard, Millard R.: *See—*
Yost, Charles N.; Bolyard, Millard R.; and Whitmer, Leon M., 4,064,501, Cl. 340-286.00R.
Bond, John W., Jr. Terrestrial photovoltaic solar cell panel. 4,063,963, Cl. 136-89.00P.
Bonin, Andre: *See—*
Maisch, Wolfgang; Burkel, Rainer; Leroy, Jean Pierre; and Bonin, Andre, 4,064,482, Cl. 340-58.000.
Bonn, Theodore H.: *See—*
Edelberg, Murray; Bonn, Theodore H.; and Schissler, Lloyd R., 4,064,556, Cl. 364-900.000.
Boot, Frank Lyn: *See—*
Wain, Alan James Bradley; Boot, Frank Lyn; and Baines, John Eric, 4,063,976, Cl. 156-44.000.
Booy, Max Lorens, to Du Pont de Nemours, E. I., and Company. Multivented twin-screw extruder. 4,063,717, Cl. 366-75.000.
Borden, Raymond Walter; and DeBard, James Edward, to Bendix Corporation, The. Unique packaging method for use on large semiconductor devices. 4,063,348, Cl. 29-588.000.
Borders, Donald Bruce: *See—*
Kirby, Jane Parsons; and Borders, Donald Bruce, 4,064,012, Cl. 195-80.00R.
Boreas, Willem J. L., to Sangamo Weston, Inc. Compact moving coil meter. 4,064,457, Cl. 324-150.000.
Borg-Warner Corporation: *See—*
Eagle, Lawrence G., 4,063,846, Cl. 415-199.200.
Ivey, John Saxon; and Silberschlag, Russell Earl, 4,063,623, Cl. 192-3.310.
Johnson, Roy Henry; and Graham, Donald K., 4,063,905, Cl. 48-180.00R.
Kelbel, Donald William, 4,063,470, Cl. 74-785.000.
Showalter, Dan Joseph, 4,063,466, Cl. 74-574.000.
Borgese, William Anthony, to RCA Corporation. Apparatus for measuring a dimension of an object. 4,063,820, Cl. 356-167.000.
Bornstein, Norman D.; d'Entremont, Donald J.; Weinberg, Alan S.; Schirmer, Henry G.; and Sun, Joseph Zu, to W. R. Grace & Co. Heat shrinkable multi-layer film of hydrolyzed ethylene vinyl acetate and a cross-linked olefin polymer. 4,064,296, Cl. 428-35.000.
Borsi, Jozsef: *See—*
Mago nee Karacsony, Erzsebet; Borsi, Jozsef; Csanyi, Endre; Pik, Katalin; and Wolf, Lajos, 4,064,249, Cl. 424-261.000.
Borst, Wolfgang: *See—*
Gorille, Ingo; Borst, Wolfgang; Klotzner, Winfried; Ott, Karl; Moller, Heinz; Honig, Gunter; Kiencke, Uwe; Zechnall, Martin; Flaig, Ulrich; Schulz, Alfred; and Pagel, Ernst-Olav, 4,063,539, Cl. 123-117.00D.
Borsuk, Leslie M.; Anderson, Randall H.; Grimsby, Emerson A.; and Malsberger, Robert F., to International Telephone and Telegraph Corporation. Electrical connector assembly apparatus and method of connector fabrication. 4,063,351, Cl. 29-629.000.
Bosch, Erhard: *See—*
Roth, Michael; Bosch, Erhard; and Gluck, Herbert, 4,063,958, Cl. 106-308.00Q.
Bouchard, Robert Joseph; Brixner, Lothar Heinrich; and Popowich,

Michael John, to Du Pont de Nemours, E. I., and Company. Process for making multilayer capacitors. 4,063,341, Cl. 29-25.420.
Boulanger, Michelle: *See—*
Beregi, Laszlo; Hugon, Pierre; Duhault, Jacques; and Boulanger, Michelle, 4,064,245, Cl. 424-250.000.
Boundy, Donald G.: *See—*
Eaton, Bill W.; and Boundy, Donald G., 4,063,986, Cl. 156-394.000.
Bour, Thomas C.: *See—*
Briar, Thomas J.; and Bour, Thomas C., 4,063,915, Cl. 65-11.00R.
Bourke, Patrick Terence. Method of making a composite surface elements of stone and lightweight sheet material. 4,063,982, Cl. 156-254.000.
Boutet, Camille; and Fevre, Andre. Automatic unplugging aluminothermic welding crucible. 4,063,720, Cl. 266-167.000.
Bouy, Pierre; de Lachaux, Hubert; and Conan, Michel, to Rhone-Poulenc Industries. Electrolysis cell of modular structure and having bipolar elements. 4,064,032, Cl. 204-270.000.
Bowen, Glenn W.: *See—*
Sidor, Edward F.; Camillo, Charles C.; and Bowen, Glenn W., 4,064,497, Cl. 340-197.000.
Bowen, Robert F., to Raytheon Company. Solar energy collectors. 4,063,544, Cl. 126-270.000.
Bowerman, William R. Method and apparatus for enhancing a televised object. 4,064,528, Cl. 358-22.000.
Boy, Aristide: *See—*
Labat, Yves; and Boy, Aristide, 4,064,159, Cl. 260-465.50R.
Boyce, Harold D.: *See—*
Soderquist, Frederick J.; Boyce, Harold D.; and Butts, William R., 4,064,187, Cl. 260-669.00R.
Bozzo, George J., to Irvinware Division of Beatrice Foods Company. Method of assemblying mechanical cork puller. 4,063,473, Cl. 81-3.370.
BPB Industries Limited: *See—*
Wain, Alan James Bradley; Boot, Frank Lyn; and Baines, John Eric, 4,063,976, Cl. 156-44.000.
Brabson, George D., Jr.: *See—*
King, Lowell A.; Brabson, George D., Jr.; Erbacher, John K.; Seegmiller, David W.; Fannin, Armand A., Jr.; and Viola, John T., 4,064,327, Cl. 429-112.000.
Bradner, William T.: *See—*
Nettleton, Donald E., Jr.; Bush, James A.; Bradner, William T.; and Schreiber, Richard H., 4,064,014, Cl. 195-96.000.
Bradshaw, Janice: *See—*
Cook, Martin Christopher; Gregory, Gordon Ian; and Bradshaw, Janice, 4,064,346, Cl. 544-30.000.
Bradshaw, Stephen C.: *See—*
McFarland, Robert L.; and Bradshaw, Stephen C., 4,063,368, Cl. 35-25.000.
Bradshaw, Thomas Ian, to Minnesota Mining and Manufacturing Company. Method and device for monitoring vapor concentration at a phase interface. 4,063,452, Cl. 73-73.000.
Brady, Donnie G.: *See—*
Stapp, Paul R.; and Brady, Donnie G., 4,064,115, Cl. 260-79.100.
Braillard, Pierre. Button securing device. 4,063,312, Cl. 2-265.000.
Brand "X" Company: *See—*
Canterman, David; and Bergin, Thomas Michael, 4,063,645, Cl. 209-122.000.
Brashear, Joseph O., to Mesta Machine Company. Quick-change coiler assembly for strip mills and the like. 4,063,440, Cl. 72-148.000.
Braunschweigische Maschinenbauanstalt: *See—*
Dietzel, Walter; Matusch, Siegfried; and Hentschel, Volkmar, 4,063,959, Cl. 127-19.000.
Bremen, Josef: *See—*
Arlt, Dieter; and Bremen, Josef, 4,064,110, Cl. 260-75.0NB.
Bretz, George Miller, to Koppers Company, Inc. Nitrogen fixation and molecular magneto hydrodynamic generation using a coal gasification gas stream. 4,064,222, Cl. 423-393.000.
Brewer, Bill J. Double saddle hanger clamp. 4,063,700, Cl. 248-62.000.
Briar, Thomas J.; and Bour, Thomas C., to PPG Industries, Inc. Marble melt glass fiber feed system. 4,063,915, Cl. 65-11.00R.
Bridgestone Tire Company Limited: *See—*
Halada, Jumei; Akiyoshi, Hiromi; and Matsunaga, Tsutomu, 4,064,215, Cl. 264-236.000.
Takigawa, Hiroyoshi, 4,063,584, Cl. 152-365.000.
Ueda, Shigeo, 4,063,526, Cl. 114-220.000.
Bristol-Myers Company: *See—*
Howard, Alan N., 4,064,234, Cl. 424-157.000.
Kaplan, Murray A.; Gottstein, William J.; and Granatek, Alphonse P., 4,064,345, Cl. 544-27.000.
Nettleton, Donald E., Jr.; Bush, James A.; Bradner, William T.; and Schreiber, Richard H., 4,064,014, Cl. 195-96.000.
Britton, James E.: *See—*
Fordyce, Gary L.; Hein, Richard D.; Sandels, Fred V.; and Britton, James E., 4,063,840, Cl. 404-69.000.
Brixner, Lothar Heinrich: *See—*
Bouchard, Robert Joseph; Brixner, Lothar Heinrich; and Popowich, Michael John, 4,063,341, Cl. 29-25.420.
Broadwin, Alan: *See—*
Wuchinich, David G.; Broadwin, Alan; and Andersen, Robert P., 4,063,557, Cl. 128-276.000.
Brooks, John O.: *See—*
Sliz, Edward; Brooks, John O.; and Gibson, Howard M., 4,063,345, Cl. 29-522.000.
Brother Kogyo Kabushiki Kaisha: *See—*
Sasaki, Toshio, 4,063,525, Cl. 112-158.00A.
Broussaud, Georges, to Thomson-Brandt. Method and device for displaying a picture film via a video-disc. 4,064,538, Cl. 358-128.000.
Brovelli, Loredana. Releasable coupling device. 4,063,689, Cl. 242-46.500.
Brown, Delmont D., to D. S. Brown Company, The. Expansion joint with elastomer seal. 4,063,839, Cl. 404-69.000.
Brown, Edward L.: *See—*
Stary, Marvin L.; Brown, Edward L.; and Pridonoff, Eric L., 4,063,874, Cl. 431-350.000.
Brown, Edward Morris: *See—*
Downing, Neil Hugh; Brown, Edward Morris; and Towns, Edward Johnson, 4,063,666, Cl. 222-455.000.
Brown, James L.; and Lyle, Leo R., to Mallinckrodt, Inc. Radioimmunoassay method for the determination of cardiotonic glycosides. 4,064,227, Cl. 424-1.000.
Brown, Richard E., to Warner-Lambert Company. Morpholino containing indolothiopyrones. 4,064,123, Cl. 544-142.000.
Brown, Robert A., to Rem Metals Corporation. Fluoride-type with heat sink for casting molten reactive and refractory metals. 4,063,954, Cl. 106-38.300.
Brown, William E.: *See—*
Meyers, Edward; Trejo, William H.; Pluscec, Josip; and Brown, William E., 4,064,013, Cl. 195-80.00R.
Bruce, George Hayden: *See—*
Howell, James Damron; Beck, Robert William; Bruce, George Hayden; and McLain, John David, 4,063,602, Cl. 175-7.000.
Brundin, Bo Ivar Jonny: *See—*
Roger, Michel; Sander, Nils Borje Lennart; and Brundin, Bo Ivar Jonny, 4,063,491, Cl. 92-130.00A.
Bruzek, Daniel A., to Owatonna Tool Company. Puller tool. 4,063,412, Cl. 59-7.000.
Buchscheidt, Kurt: *See—*
Volz, Dieter; Buchscheidt, Kurt; and Rech, Reiner, 4,063,990, Cl. 156-580.200.
Buggy, Michael, to Vista Developments, Inc. Web winding apparatus. 4,063,692, Cl. 242-56.900.
Buhrer, Erwin: *See—*
Keller, Franz, 4,063,586, Cl. 164-207.000.
Bullard, James M. Spinning shot gun projectile. 4,063,511, Cl. 102-38.000.
Bunker Ramo Corporation: *See—*
Baxter, William D., 4,064,560, Cl. 364-900.000.
Bunn, Dorrance P., Jr.: *See—*
Jones, Henry B.; and Bunn, Dorrance P., Jr., 4,063,344, Cl. 29-455.00R.
Bureau BBR Ltd.: *See—*
Siegwart, Hans Rudolf; and Leeb, Dietmar, 4,064,319, Cl. 428-602.000.
Burke, Louis C. Picture frame. 4,063,378, Cl. 40-156.000.
Burkel, Rainer: *See—*
Maisch, Wolfgang; Burkel, Rainer; Leroy, Jean Pierre; and Bonin, Andre, 4,064,482, Cl. 340-58.000.
Burleigh, John E.: *See—*
Uraneck, Carl A.; and Burleigh, John E., 4,064,337, Cl. 526-204.000.
Burlington Industries, Inc.: *See—*
Best, Robert H.; and Harris, William D., 4,064,548, Cl. 361-229.000.
Kelly, Vincent S.; and Munns, Murry W., Jr., 4,063,696, Cl. 242-125.100.
Burns, Carmen D., to National Semiconductor Corporation. Method of making gang bonding interconnect tape for semiconductive devices. 4,063,993, Cl. 156-659.000.
Burr, John F.; and Hadi, Homayoun, to Consolidation Coal Company. Electrical circuitry for detecting a combustible mixture of gas in a mine atmosphere. 4,064,498, Cl. 340-237.00R.
Burroughs Corporation: *See—*
Faber, Ulbe, 4,064,486, Cl. 340-147.0SY.
Gajski, Daniel Danko; Tulpule, Bhalchandra Ramchandra; and Vora, Chandrakant Ratilal, 4,064,421, Cl. 364-716.000.
Roggenstein, Edwin O.; and Manthiram, Chockalingam, 4,064,388, Cl. 235-61.00A.
Burroughs Wellcome Co.: *See—*
McDermed, John D.; McKenzie, Gerald M.; and Phillips, Arthur P., 4,064,271, Cl. 424-330.000.
Burroway, Gary L.; and Maximovich, Michael J., to Goodyear Tire & Rubber Company, The. Coating composition. 4,064,092, Cl. 260-29.6PM.
Burton, Charles G., to Chisholm-Ryder Company, Inc. Harvesting machine. 4,063,406, Cl. 56-330.000.
Burtsev, Vladimir Mikhailovich: *See—*
Akushsky, Izrail Yakovlevich; Burtsev, Vladimir Mikhailovich; Kazangapov, Alken Nurmagambetovich; and Pak, Ivan Timofeevich, 4,064,400, Cl. 364-746.000.
Bush, James A.: *See—*
Nettleton, Donald E., Jr.; Bush, James A.; Bradner, William T.; and Schreiber, Richard H., 4,064,014, Cl. 195-96.000.
Bushick, Ronald D., to Suntech, Inc. Ammoxidation catalyst. 4,064,072, Cl. 252-464.000.
Bushnell, Calvin L.; and Kunz, Harold Russell, to United Technologies Corporation. Electrolyte reservoir for a fuel cell. 4,064,322, Cl. 429-41.000.
BUSS AG: *See—*
Feuerlein, Peter, 4,063,394, Cl. 52-294.000.
Bustos, Rafael T., to Leggett & Platt, Incorporated. Shelf structure for a display rack. 4,063,518, Cl. 108-6.000.

Butterfield, James L.: *See—*
Wright, George C.; and Butterfield, James L., 4,064,134, Cl. 260-295.0CA.

Butts, William R.: *See—*
Soderquist, Frederick J.; Boyce, Harold D.; and Butts, William R., 4,064,187, Cl. 260-669.00R.

Buuck, Robert E.: *See—*
Klatt, William M.; Graves, Wayne H.; and Buuck, Robert E., 4,063,548, Cl. 128-2.00R.

Buzzi, Luigi. Device for determining the angular unbalance position in a balancing machine for rotating pieces. 4,063,461, Cl. 73-462.000.

Byrne, Joseph Gerald: *See—*
Alex, Franklin; and Byrne, Joseph Gerald, 4,064,438, Cl. 250-308.000.

C. G. DORIS (Compagnie Generale pour les Developpements Operationnels des Richesses Sous-marines: *See—*
Lamy, Jacques Edouard, 4,063,430, Cl. 61-113.000.

Cahen, David Ferdinand: *See—*
Manassen, Joost; Hodes, Gary; and Cahen, David Ferdinand, 4,064,326, Cl. 429-111.000.

Cairns, Hugh: *See—*
Augstein, Joachim; Cairns, Hugh; Hunter, Dennis; and King, John, 4,064,256, Cl. 424-269.000.

Calspan Corporation: *See—*
Schneider, Clayton J., Jr.; and Ruda, Ernest V., 4,063,515, Cl. 102-89.0CD.

Calvano, Alexander S. Water cleaner. 4,064,049, Cl. 210-247.000.

Calvert, Rodney K., to Mead Corporation, The. Bottle carrier. 4,063,771, Cl. 294-87.200.

Camco Paints, Inc.: *See—*
Curtis, Thomas Haley, 4,064,316, Cl. 428-522.000.

Camillo, Charles C.: *See—*
Sidor, Edward F.; Camillo, Charles C.; and Bowen, Glenn W., 4,064,497, Cl. 340-197.000.

Campbell, Jack B., to Eli Lilly and Company. Trifluoromethyl dibenzo[a,c]phenazines as immune regulants. 4,064,127, Cl. 260-266.000.

Campbell Soup Company: *See—*
Murphy, Donald E.; and Roby, Steven J., 4,063,989, Cl. 156-453.000.

Canon Kabushiki Kaisha: *See—*
Kawanabe, Tsuyoshi, 4,064,559, Cl. 364-900.000.
Kishimoto, Jyuji; Sado, Ichiro; and Sano, Yuji, 4,064,398, Cl. 364-709.000.
Mashimo, Yukio; Sakurada, Nobuaki; Ito, Tadashi; Ito, Fumio; Shinoda, Nobuhiko; and Murakami, Hiroyashu, 4,064,515, Cl. 354-23.00D.
Suda, Masashi, 4,063,724, Cl. 271-277.000.
Yokota, Hideo, 4,063,801, Cl. 350-216.000.

Canterbury, Robert Houston, to Dresser Industries, Inc. Pressure-balanced well service valve. 4,063,594, Cl. 166-325.000.

Canterman, David; and Bergin, Thomas Michael, to Brand "X" Company. Sorting tray. 4,063,645, Cl. 209-122.000.

Caplin Engineering Company Limited: *See—*
Pizzey, Anthony Reginald; and Waters, Alan James, 4,063,482, Cl. 83-207.000.

Caprio, Lawrence A.: *See—*
Gerson, Ronald L.; and Caprio, Lawrence A., 4,064,053, Cl. 210-497.0FB.

Carborundum Company, The: *See—*
Harting, Louis L.; and Kozlow, Michael R., 4,063,573, Cl. 138-155.000.

Carlson, David Emil, to RCA Corporation. Semiconductor device having a body of amorphous silicon. 4,064,521, Cl. 357-2.000.

Carnahan, Danny L.: *See—*
Schubeler, Kenneth Erwin; Carnahan, Danny L.; and O'Keefe, Dennis Grover, 4,064,395, Cl. 364-107.000.

Carney, Leroy L., to Halliburton Company. Aqueous drilling fluids and additives therefor. 4,064,055, Cl. 252-8.50C.

Carolan, Raymond Jerome; and Kristoffersen, Bjorn Roar, to Boeing Company, The. Vacuum toilet system. 4,063,315, Cl. 4-10.000.

Carrier Corporation: *See—*
De Groat, Carl J., 4,063,853, Cl. 417-53.000.
Shields, J. Rodger, 4,063,417, Cl. 60-641.000.
Shields, J. Rodger, 4,063,418, Cl. 60-641.000.

Carter, William M.; Klauschie, Robert W.; and Schillreff, George H., to General Dynamics Corporation. Decoy launcher system. 4,063,485, Cl. 89-1.816.

Cartwright, James Murgen, Jr., to RCA Corporation. Current mirror amplifiers with programmable current gains. 4,064,506, Cl. 340-347.0DA.

Carty, Daniel T.: *See—*
Myers, Robert M.; Dunkelberger, David L.; and Carty, Daniel T., 4,064,197, Cl. 260-876.00R.

Casale, Renato, to Ital Elettronica S.p.A. Scanning device for scintigraphy of the human body. 4,064,441, Cl. 250-363.00S.

Casebier, Ronald Leroy: *See—*
Sears, Karl David; and Casebier, Ronald Leroy, 4,064,166, Cl. 260-511.000.

Casio Computer Co., Ltd.: *See—*
Kashio, Toshio, 4,064,553, Cl. 364-200.000.

Cassal, Jean-Marie; Furst, Andor; and Meier, Werner, to Hoffmann-La Roche, Inc. 9,10-Seco-steroids. 4,064,173, Cl. 260-586.00E.

Caterpillar Tractor Co.: *See—*
Beck, Henry E.; Hasten, Jimmie L.; and Sindelar, Ernest C., 4,063,624, Cl. 192-4.00A.
Crabb, Elmer R., 4,063,464, Cl. 74-331.000.
Eaton, Bill W.; and Boundy, Donald G., 4,063,986, Cl. 156-394.000.
Rohman, Terrance J., 4,063,334, Cl. 24-213.00B.
Wiggins, Jesse O.; and Waltz, Gerry L., 4,063,848, Cl. 415-206.000.

Catoire, Dany: *See—*
Cheron, Jacques; and Catoire, Dany, 4,063,899, Cl. 23-284.000.

Cavitron Corporation: *See—*
LeVantine, Allan D., 4,063,806, Cl. 351-9.000.
Wuchinich, David G.; Broadwin, Alan; and Andersen, Robert P., 4,063,557, Cl. 128-276.000.

CBS Inc.: *See—*
Kaiser, Arthur; Moore, James Kenneth; and Glenn, William E., Jr., 4,064,530, Cl. 358-36.000.

Celanese Corporation: *See—*
Forschirm, Alex S., 4,063,887, Cl. 8-130.100.
Stackman, Robert W.; and Conciatori, Anthony B., 4,064,107, Cl. 260-47.0CB.
Taylor, Paul D., 4,064,145, Cl. 260-346.110.

Centre d'Etudes et de Realisations Industrielles de l'Atlantique C.E.R.I.A.: *See—*
Chardonneau, Joel; and Sable, Claude, 4,063,825, Cl. 417-343.000.

Cerny, Antonin: *See—*
Semonsky, Miroslav; Cerny, Antonin; Krajcrova, Marie; Rezabeck, Karel; Auskova, Marie; Seda, Miroslav; Sevcik, Bohumil; and Kral, Josef, 4,064,130, Cl. 260-285.500.

Cesari, Marco: *See—*
Cucinella, Salvatore; Cesari, Marco; and Salvatori, Tito, 4,064,153, Cl. 260-448.00R.

Chabah, Maurice, to Thomson-CSF. High repetition frequency side-looking pulse radar system. 4,064,510, Cl. 343-7.500.

Chabas & Besson S.A.: *See—*
Besson, Louis A., 4,063,439, Cl. 72-45.000.

Chamberlain Manufacturing Corporation: *See—*
Willmott, Colin Barns; and Stifle, James D., 4,064,404, Cl. 307-141.400.

Chamlin, Matthew D.: *See—*
Kozlowski, Edward C.; and Chamlin, Matthew D., 4,064,302, Cl. 428-152.000.

Champseix, Alain Andre; Gueremy, Claude Georges Alexandre; and Le Fur, Gerard Roger, to Mar-Pha Societe d'Etudes et d'Exploitation de Marques. Compositions containing new indole derivatives and their use in pharmacology. 4,064,255, Cl. 424-267.000.

Chan, Ming Sam: *See—*
Going, Robert E.; Loehman, Ronald E.; and Chan, Ming Sam, 4,063,552, Cl. 128-136.000.

Chandra, Grish; and Griffiths, Brian John, to Dow Corning Corporation. Catalysts and carriers therefor. 4,064,154, Cl. 260-448.20E.

Chanton, Edmond, to Societe Generale de Macanique et de Metallurgie. Elastic rotational couplings. 4,063,433, Cl. 64-11.00R.

Chapman, Ronald Howard, to Motorola, Inc. Sampled signal detector. 4,064,488, Cl. 340-171.00R.

Chardonneau, Joel; and Sable, Claude, to Centre d'Etudes et de Realisations Industrielles de l'Atlantique C.E.R.I.A. Pumping apparatus particularly for oil wells. 4,063,825, Cl. 417-343.000.

Chaussy, Roland; and Paoli, Jean, to Agence Nationale de Valorisation de la Recherche (ANVAR). Freezing and cold-storage installation. 4,063,432, Cl. 62-419.000.

Chauvette, Robert R., to Eli Lilly and Company. 3-Halo cephalosporins. 4,064,343, Cl. 544-16.000.

Chebotarev, Valery Panteleimonovich: *See—*
Korshak, Vasily Vladimirovich; Gribova, Irina Alexandrovna; Krasnov, Alexandr Petrovich; Teplyakov, Mikhail Mikhailovich; Elerdashvili, Georgy Vasilievich; Gureeva, Galina Ilinichna; Chebotarev, Valery Panteleimonovich; Dvorikova, Raisa Alexeevna; Sergeev, Vladimir Alexandrovich; and Kakauridze, Dali Mitrofanovna, 4,064,097, Cl. 260-37.00R.

Chemiefaser Lenzing Aktiengesellschaft: *See—*
Hupfl, Johann; Czermak, Manfred; Teichmann, Helmut; and Paul, Josef, 4,063,883, Cl. 8-116.00P.

Chemplex Company: *See—*
Hwang, Yu-Tang, 4,064,336, Cl. 526-172.000.

Chemtrust Industries Corporation: *See—*
Schneider, Barry; and Bernard, Steven, 4,063,665, Cl. 222-129.000.

Chen, Hao-Lin, to United States of America, Energy Research & Development Administration. Separation of carbon and nitrogen isotopes by selective photodissociation azo or diazo compounds. 4,064,025, Cl. 204-158.00R.

Chen, Thomas M.: *See—*
Chen, Tung Chang; and Chen, Thomas M., 4,064,534, Cl. 358-107.000.

Chen, Tung Chang; and Chen, Thomas M., to Leone International Sales Corporation. System for monitoring the production of items which are initially difficult to physically inspect. 4,064,534, Cl. 358-107.000.

Cherednikov, Evgeny Nikolaevich: *See—*
Gurkov, Konstantin Stepanovich; Nazarov, Nikolai Grigorievich; Cherednikov, Evgeny Nikolaevich; Plavskikh, Vladimir Dmitrievich; Rozhkov, Leonid Georgievich; Tkach, Khaim Berkovich; Grigoraschenko, Vladimir Alexandrovich; Kostylev, Alexandr Dmitrievich; Davydov, Vasily Georgievich; and Zuev, Valentin Alexeevich, 4,063,423, Cl. 61-53.620.

Cherkofsky, Saul Carl; and Sharpe, Thomas Ray, to Du Pont de Nemours, E. I., and Company. Anti-inflammatory diarylimidazothiazoles and their corresponding S-oxides. 4,064,260, Cl. 424-270.000.

Cheron, Jacques; and Catoire, Dany, to Institut Francais du Petrole. Decarbonating a gas with a wetted filter. 4,063,899, Cl. 23-284.000.

Chevalier, Alain. Method and a device for machining parts and especially optical lenses by means of a model. 4,063,390, Cl. 51-101.0LG.

Chevron Research Company: *See—*
Anderson, David K.; and Stewart, Marvin A., 4,064,054, Cl. 210-536.000.
Harrison, Jonas P., 4,064,070, Cl. 252-435.000.

Chew, William M.; Ayers, Orval E.; Murfree, James A.; and Martignoni, Pasquale, to United States of America, Army. Method for producing hydrogen or deuterium from storable solid propellant compositions based on complex metal boron compounds. 4,064,225, Cl. 423-648.00R.

Chika, John J. Individual restraining device for a vehicle user. 4,063,778, Cl. 297-389.000.

Chino, Nobuo, to Taisei Kensetsu Kabushiki Kaisha. Article conveying apparatus. 4,063,651, Cl. 214-1.0BB.

Chisholm-Ryder Company, Inc.: *See—*
Burton, Charles G., 4,063,406, Cl. 56-330.000.

Chloride Group Limited: *See—*
Grenness, Morten, 4,064,325, Cl. 429-104.000.

Choay, Jean; Trolard, Paul; and Febvre, Henri Lucien, to Institut National de la Sante et de la Recherche Medicale. Process for obtaining an active product from mammalian macrophages. 4,064,007, Cl. 195-1.800.

Choi, Charles K., to Occidental Petroleum Corporation. Internally circulating fast fluidized bed flash pyrolysis reactor. 4,064,018, Cl. 201-12.000.

Choiniere, Alcide W.; Kutnyak, Thomas A.; and Dunn, George T., to Automation Industries, Inc. Machine and method for forming continuous tubing. 4,063,988, Cl. 156-429.000.

Chokai, Shoichi: *See—*
Murai, Hiromu; Ohata, Katsuya; Enomoto, Hiroshi; Chokai, Shoichi; Maehara, Mitsuhiro; Saito, Katsuhide; and Ozaki, Takayuki, 4,064,252, Cl. 424-266.000.

Christensen, Burton G.: *See—*
Beattie, Thomas R.; and Christensen, Burton G., 4,064,344, Cl. 544-21.000.

Christensen, C. Paul, Jr.: *See—*
Hellwarth, Robert W.; and Christensen, C. Paul, Jr., 4,063,804, Cl. 350-320.000.

Christiansen, Fredric A.: *See—*
Lazorisak, Nicholas W.; Christiansen, Fredric A.; and Harriz, John M., 4,064,213, Cl. 264-134.000.

Christy, Marcia E.: *See—*
Anderson, Paul S.; Christy, Marcia E.; and Ponticello, Gerald S., 4,064,139, Cl. 260-313.100.

Chrysler Corporation: *See—*
Andersen, Poul H., 4,064,413, Cl. 315-77.000.

Ciba-Geigy AG: *See—*
Bogg, Thomas George, 4,063,951, Cl. 96-94.00R.
Loew, Peter; Schwander, Hansrudolf; and Kristinsson, Haukur, 4,064,136, Cl. 260-304.00C.
Renner, Alfred, 4,064,088, Cl. 260-29.300.

Ciba-Geigy Corporation: *See—*
Adam, Jean-Marie, 4,064,140, Cl. 260-326.5FL.
Farooq, Saleem; Drabek, Jozef; Gsell, Laurenz; Karrer, Friedrich; and Meyer, Willy, 4,064,263, Cl. 424-285.000.
Hubele, Adolf; and Kuhne, Manfred, 4,063,921, Cl. 71-76.000.
Huff, Roger K.; Gallay, Jean Jacques; and Kuhne, Manfred, 4,064,243, Cl. 424-248.500.
Karrer, Friedrich, 4,064,269, Cl. 424-308.000.
Schmid, Rolf; and Kreibich, Ursula, 4,063,546, Cl. 126-271.000.
Varsanyi, Denis V.; Aufderhaar, Ernst; and Schweizer, Ernst, 4,064,265, Cl. 424-300.000.

Cincinnati Milacron Inc.: *See—*
Schubeler, Kenneth Erwin; Carnahan, Danny L.; and O'Keefe, Dennis Grover, 4,064,395, Cl. 364-107.000.

Claar, James A.: *See—*
Babil, Simon; Claar, James A.; and Temple, Rodger G., 4,064,294, Cl. 427-373.000.

Clappier, Robert R.: *See—*
Powell, John David; Hubbard, Mont; and Clappier, Robert R., 4,063,538, Cl. 123-117.00R.

Clark, Danford E., to Union Oil Company of California. Pressure testing of catalyst loaded reactors. 4,064,036, Cl. 208-46.000.

Clark, Donald G.: *See—*
Baker, W. Barry; and Clark, Donald G., 4,063,824, Cl. 417-43.000.

Clark Equipment Company: *See—*
Bauer, James J.; and Hoechst, Lonnie D., 4,063,832, Cl. 403-54.000.

Clark, K. Warren: *See—*
Mackay, Donald A. M.; Clark, K. Warren; Witzel, Frank; and Schoenholz, Daniel, 4,064,274, Cl. 426-3.000.

Clean Air Engineering, Inc.: *See—*
Stary, Marvin L.; Brown, Edward L.; and Pridonoff, Eric L., 4,063,874, Cl. 431-350.000.

Cleveland, Dale Paul: *See—*
Washburn, Dean Becker; and Cleveland, Dale Paul, 4,063,402, Cl. 53-258.000.

Cline, Harvey E.; and Anthony, Thomas R., to General Electric Company. Making deep power diodes. 4,063,965, Cl. 148-1.500.

Cline, Harvey E.: *See—*
Anthony, Thomas R.; and Cline, Harvey E., 4,063,966, Cl. 148-1.500.

Cmar, John A., Jr.: *See—*
Barkley, George G.; Cmar, John A., Jr.; and McCreery, Howard J., 4,063,843, Cl. 408-146.000.

Co-Operative Industries, Inc.: *See—*
Anderson, Franklin T., 4,063,756, Cl. 285-84.000.

Coal Industry (Patents) Limited: *See—*
Battcock, Whalley Vowe, 4,063,589, Cl. 165-104.00F.

Coleman, Arthur Edward: *See—*
Kruppa, Richard F.; and Coleman, Arthur Edward, 4,063,911, Cl. 55-67.000.

Coleman, John Dale; and Paginton, Philip Norman, to Westinghouse Brake & Signal Co. Ltd. Fluid pressure operable brake actuators with fluid operable brake sock and release. 4,063,622, Cl. 188-153.00R.

Colgate-Palmolive: *See—*
Klisch, Stephen Cajetan; and Martin, Charles Andrew, 4,064,076, Cl. 252-542.000.
Yurko, Joseph A., 4,064,062, Cl. 252-99.000.

Collins, Paul W.; and Pappo, Raphael, to G. D. Searle & Co. 15,16-Dihydroxyprostaglandins. 4,064,350, Cl. 560-121.000.

Columbia Machine, Inc.: *See—*
Neth, Otto; and Schmitt, Robert A., 4,063,632, Cl. 198-374.000.

Columbus McKinnon Corporation: *See—*
Benton, Reuben Paul; and Schreyer, Kenneth D., 4,063,413, Cl. 59-35.0CP.

Combustion and Controls Company, Inc.: *See—*
Wilkinson, Michael T., 4,063,640, Cl. 206-231.000.

Combustion Engineering, Inc.: *See—*
Andrea, Christo, 4,064,000, Cl. 176-30.000.
Duncan, Richard Joseph, 4,064,001, Cl. 176-38.000.
Parenchuck, Charles Stephen, 4,064,202, Cl. 261-44.00R.

Combustion Equipment Associates Inc.: *See—*
Beningson, Robert M.; Beningson, Herbert E.; Menon, Narayanankutty V. P.; Nadkarni, Ravindra M.; Lamb, Thomas J.; Fox, Lee K.; and Keary, William V., 4,063,903, Cl. 44-2.000.

Commissariat a l'Energie Atomique: *See—*
Baujat, Jacques, 4,064,005, Cl. 176-87.000.

Communications Patents Limited: *See—*
Gargini, Eric John West, 4,064,460, Cl. 325-308.000.

Communications Satellite Corporation: *See—*
Horna, Otakar Anthony, 4,064,379, Cl. 179-170.200.

Compagnie Generale d'Electricite S.A.: *See—*
Desplanches, Gerard; Lazennec, Yvon; and Leboucq, Jacques, 4,064,209, Cl. 264-61.000.

Compagnie Royale Asturienne des Mines: *See—*
Dekeister, Roger; Lemaire, Gilbert; and Marzys, Daniel, 4,064,033, Cl. 204-275.000.

Compton, Wayne W.; and Shaner, Richard B., to Kim Lighting, Inc. Tenon for mounting a lighting fixture. 4,064,432, Cl. 362-457.000.

Conan, Michel: *See—*
Bouy, Pierre; de Lachaux, Hubert; and Conan, Michel, 4,064,032, Cl. 204-270.000.

Conciatori, Anthony B.: *See—*
Stackman, Robert W.; and Conciatori, Anthony B., 4,064,107, Cl. 260-47.0CB.

Conradsen, Arne; and Lie, Ole Hannibal, to Worsk Hydro a.s. Process for the production of ammoniated straw and other plant materials containing lignocellulose. 4,064,276, Cl. 426-69.000.

Considine, Philip S.: *See—*
Bernstein, Kenneth L.; Considine, Philip S.; and Parrent, George B., Jr., 4,063,799, Cl. 350-162.0SF.

Consolidation Coal Company: *See—*
Burr, John F.; and Hadi, Homayoun, 4,064,498, Cl. 340-237.00R.

Constructions Navales et Industrielles de la Mediterranee: *See—*
Meuret, Paul, 4,063,831, Cl. 403-28.000.

Continental Oil Company: *See—*
Riddle, John L., 4,064,182, Cl. 260-615.00B.

Control Data Corporation: *See—*
Goss, Lloyd Chambers, 4,064,545, Cl. 360-133.000.

Cook Electric Company: *See—*
Splitt, Frank G.; and Scheithauer, Eric A., 4,063,339, Cl. 29-25.150.

Cook, Martin Christopher; Gregory, Gordon Ian; and Bradshaw, Janice, to Glaxo Laboratories Limited. 3-Acetoxymethyl-7β-(2-carboxy-methoxyimino-2-arylacetamido)ceph-3-em-4-carboxylic acids and salts thereof. 4,064,346, Cl. 544-30.000.

Cookson, Alan H., to Westinghouse Electric Corporation. Gas insulated transmission line. 4,064,354, Cl. 174-28.000.

Coonce, Homer Eugene; Synnott, Judson Bruce, III; and Harty, Austin Thomas, deceased (by Harty, Veronica M., administrator), to Bell Telephone Laboratories, Incorporated. Time-division switching system. 4,064,370, Cl. 179-15.0BA.

Coone, Malcolm G.; and Hoffman, Erwin E., to Lynes, Inc. Grouting system and arrangement for offshore structure. 4,063,421, Cl. 61-102.000.

Cooper, Ethel: *See—*
Kitay, Barry E., 4,063,731, Cl. 273-32.00B.

Cooper, Jack M. Steam generator. 4,063,416, Cl. 60-641.000.

Cooper, Maurice Jay: *See—*
Kitay, Barry E., 4,063,731, Cl. 273-32.00B.

Cooper, Roy G.: *See—*
Leary, David F.; Cooper, Roy G.; and Miertschin, Gary N., 4,064,204, Cl. 264-.500.

Cordeiro, Raymond L. Runaway binding device for a ski. 4,063,753, Cl. 280-637.000.

Cordes, Claus; and Sterzel, Hans-Josef, to BASF Aktiengesellschaft. Polybutylene terephthalate molding compositions which are resistant to heat-aging. 4,064,103, Cl. 260-45.90D.

Cosgarea, Andrew, Jr.: *See—*
Simpson, James W.; Cosgarea, Andrew, Jr.; and Bankert, Richard D., 4,063,346, Cl. 29-527.700.

Cote, Paul T., to General Electric Company. Last-flash indicator for photoflash array. 4,064,431, Cl. 362-4.000.
Couch, Terry Lee: *See—*
Stein, Robert George; Couch, Terry Lee; and Crovetti, Aldo Joseph, 4,064,142, Cl. 260-332.30R.
Coussediere, Daniel; and Gasc, Jean-Claude, to Roussel UCLAF. Antibiotic aminoglycosides, processes of preparation and pharmaceutical compositions. 4,064,339, Cl. 536-17.000.
Cowsar, Donald Roy; and Tanquary, Albert Charles, to National Patent Development Corporation. Thermoplastic hydrogels. 4,064,086, Cl. 260-29.20R.
Cox, Dale W., to Western Magnum Corporation. Air-circulating device with air freshener, humidifier, and/or deodorizer. 4,064,203, Cl. 261-99.000.
CPC International Inc.: *See—*
Theron, Pieter Paul Adriaan; Vissers, Adrianus Martinus; and Saisselin, Aureliano Luigi, 4,064,284, Cl. 426-626.000.
Crabb, Elmer R., to Caterpillar Tractor Co. Agricultural tractor transmission. 4,063,464, Cl. 74-331.000.
Cremona, Angelo. Safety device for use with a wood shearing machine. 4,063,578, Cl. 144-178.000.
Cretzler, Donald J., to Metrology General Corporation. Cylindrical capacitive quartz transducer. 4,064,549, Cl. 361-283.000.
Cricchi, James R.; and Fitzpatrick, Michael D., to Westinghouse Electric Corporation. Complementary MOS logic circuit. 4,064,405, Cl. 307-205.000.
Critchley, John Phillip, to United Kingdom of Great Britain and Northern Ireland, The Secretary of State for Defence in Her Britannic Majesty's Government of the. Aromatic fluoro-polyimide adhesives. 4,063,984, Cl. 260-45.75B.
Crosby, Guy A.: *See—*
DuBois, Grant E.; and Crosby, Guy A., 4,064,167, Cl. 260-511.
Cross, Edward F.; Kwok, Munson A.; and Jonuska, Daniel C., to United States of America, Air Force. Method and apparatus for effecting multiple spectral wavelength imaging with infrared television. 4,064,535, Cl. 358-113.000.
Crovetti, Aldo Joseph: *See—*
Stein, Robert George; Couch, Terry Lee; and Crovetti, Aldo Joseph, 4,064,142, Cl. 260-332.30R.
Crowe, William Ray; and Paulson, Thomas Michael, to International Business Machines Corporation. Typewriter impact position adjustment mechanism. 4,063,630, Cl. 197-53.000.
Crystal, Richard G., to Xerox Corporation. Nonimaged waterless lithographic master with a curable silicone elastomer and a cured ink releasable silicone layer. 4,064,312, Cl. 428-447.000.
Csanyi, Endre: *See—*
Mago nee Karacsony, Erzsebet; Borsi, Jozsef; Csanyi, Endre; Pik, Katalin; and Wolf, Lajos, 4,064,249, Cl. 424-261.000.
CSG Enterprises, Inc.: *See—*
Garron, Carlos Subieta, 4,064,442, Cl. 318-254.000.
Cucinella, Salvatore; Cesari, Marco; and Salvatori, Tito, to Snam Progetti S.p.A. Oligomer N-alkyl-iminoalanes and process for the preparation thereof. 4,064,153, Cl. 260-448.00R.
Cunningham, Leroy G. Squeegee and flood-bar drive with screen lift. 4,063,502, Cl. 101-123.000.
Curtis, Thomas Haley, to Camco Paints, Inc. Process of denaturing lead painted surfaces. 4,064,316, Cl. 428-522.000.
Cushing, Darrell D., to Deerfield Plastics Co., Inc. Apparatus for employing a high percentage of reground thermoplastic scrap resin in an extruder. 4,063,860, Cl. 425-202.000.
Custer, Walter D.: *See—*
Lipson, Melvin A.; Knoth, Dale W.; Custer, Walter D.; and Gilano, Michael N., 4,064,287, Cl. 427-53.000.
Cutchaw, John M. Connector for leadless integrated circuit packages. 4,063,791, Cl. 339-17.0CF.
Czermak, Manfred: *See—*
Hupfl, Johann; Czermak, Manfred; Teichmann, Helmut; and Paul, Josef, 4,063,883, Cl. 8-116.00P.
D. S. Brown Company, The: *See—*
Brown, Delmont D., 4,063,839, Cl. 404-69.000.
Dain, Richard James; and Ford, Hugh. Making of articles from metallic powder. 4,063,940, Cl. 75-213.000.
D'Alelio, Gaetano F. Aminophthalic anhydride copolymers. 4,064,113, Cl. 260-78.00A.
Dalton, William O.; and Hilton, Glenn B., to Monsanto Company. Process for preparing grafted rubber latices free of coagulum. 4,064,093, Cl. 260-29.7PT.
Danforth, Byron. Device for providing a storage compartment for a helmet. 4,063,637, Cl. 206-8.000.
Daniel, Jean-Claude, to Rhone-Poulenc Industries. Latex of styrene polymers with terminal amino-sulfonated groups and method of making. 4,064,080, Cl. 260-8.000.
Dankowski, Gerhard. Compact cooling system for automotive vehicles. 4,063,431, Cl. 62-239.000.
Daravingas, George V.: *See—*
Hallstrom, Curtis H.; Glass, Brian E.; Touba, Ali R.; and Daravingas, George V., 4,064,282, Cl. 426-559.000.
Darland, Michael G.: *See—*
Hartman, George J.; and Darland, Michael G., 4,064,217, Cl. 423-120.000.
Das, Suryya K., to PPG Industries, Inc. Method for preparing polymers in aqueous medium. 4,064,087, Cl. 260-29.6RB.
d'Auria, Luigi: *See—*
Reymond, Jean-Claude; d'Auria, Luigi; Le Guen, Benoit; and Rousseil, Gilbert, 4,063,343, Cl. 29-427.000.
Davidse, Jan: *See—*
deJong, Leendert Pieter; and Davidse, Jan, 4,063,822, Cl. 356-179.000.
Davis, Dale M., to United States of America, Air Force. Armor penetrating projectile. 4,063,512, Cl. 102-52.000.
Davis, Timothy John Archer: *See—*
Hubbard, Robert William; and Davis, Timothy John Archer, 4,063,649, Cl. 212-39.00R.
Davis, Walter Lee, to Motorola, Inc. P-ROM Cell having a low current fusible programming link. 4,064,493, Cl. 365-96.000.
Davydov, Vasily Georgievich: *See—*
Gurkov, Konstantin Stepanovich; Nazarov, Nikolai Grigorievich; Cherednikov, Evgeny Nikolaevich; Plavskikh, Vladimir Dmitrievich; Rozhkov, Leonid Georgievich; Tkach, Khaim Berkovich; Grigoraschenko, Vladimir Alexandrovich; Kostylev, Alexandr Dmitrievich; Davydov, Vasily Georgievich; and Zuev, Valentin Alexeevich, 4,063,423, Cl. 61-53.620.
Day, Leon E., to Warren, Ward A. Row marker with marker arm folded by servo motor. 4,063,597, Cl. 172-126.000.
Day Star Foam Company: *See—*
Howard, John H., 4,064,301, Cl. 428-151.000.
Dayco Corporation: *See—*
Kleykamp, Donald L.; Neroni, Peter J.; Grabovez, Victor M.; and Holden, Homer N., 4,063,790, Cl. 339-16.00R.
Neroni, Peter J.; and Kleykamp, Donald L., 4,064,355, Cl. 174-47.000.
DeBard, James Edward: *See—*
Borden, Raymond Walter; and DeBard, James Edward, 4,063,348, Cl. 29-588.000.
Decker, Martin: *See—*
Scholz, Heinrich; Decker, Martin; and Neumayr, Franz, 4,064,218, Cl. 423-240.000.
DeCrescente, Michael A.; Layden, George K.; and Pike, Roscoe A., to United Technologies Corporation. Fibrillar carbon fuel cell electrode substrates and method of manufacture. 4,064,207, Cl. 264-29.600.
Deerfield Plastics Co., Inc.: *See—*
Cushing, Darrell D., 4,063,860, Cl. 425-202.000.
De Groat, Carl J., to Carrier Corporation. Noise dampening means in refrigeration motor-compressor units and method. 4,063,853, Cl. 417-53.000.
deJong, Leendert Pieter; and Davidse, Jan, to Staalkat B.V. System for detecting a first light transmissive substance, such as for instance blood, in a second light transmissive, different substance. 4,063,822, Cl. 356-179.000.
Dekeister, Roger; Lemaire, Gilbert; and Marzys, Daniel, to Compagnie Royale Asturienne des Mines. Electrolytic cell for electrolytically preparing a metal in pulverulent form. 4,064,033, Cl. 204-275.000.
de Lachaux, Hubert: *See—*
Bouy, Pierre; de Lachaux, Hubert; and Conan, Michel, 4,064,032, Cl. 204-270.000.
De Loach, Bernard Collins, Jr., to Sherman, S., a part interest. Electromagnetic wave communication systems. 4,064,458, Cl. 325-54.000.
DeLong, Donald C.: *See—*
Hamill, Robert L.; Stark, William M.; and DeLong, Donald C., 4,064,233, Cl. 424-118.000.
Delphic Research Laboratories, Inc.: *See—*
Ellis, Harold, 4,064,074, Cl. 252-506.000.
Denis, Anna, to Raymond Lee Organization, Inc., The. Hanging flower basket tool. 4,063,768, Cl. 294-19.00R.
de Nora, Oronzio: *See—*
de Nora, Vittorio; and de Nora, Oronzio, 4,064,021, Cl. 204-98.000.
de Nora, Vittorio; and de Nora, Oronzio, to Diamond Shamrock Technologies S.A. Method of improving electrolyte circulation. 4,064,021, Cl. 204-98.000.
d'Entremont, Donald J.: *See—*
Bornstein, Norman D.; d'Entremont, Donald J.; Weinberg, Alan S.; Schirmer, Henry G.; and Sun, Joseph Zu, 4,064,296, Cl. 428-35.000.
Dentsply Research & Development Corporation: *See—*
Waller, Duncan E., 4,063,360, Cl. 32-14.00A.
Derdivanis, John P.: *See—*
Block, Philip L.; and Derdivanis, John P., 4,064,229, Cl. 424-7.000.
Deruelle, Jean, to Stein Industrie. Combustion of hot gases of low calorific power. 4,063,870, Cl. 431-75.000.
Desalu, Adewunmi A., to Westinghouse Electric Corporation. Engineered safeguards systems and method in nuclear power plant training simulator. 4,064,392, Cl. 364-492.000.
Desmarchais, Walter E.; Katz, Leonard R.; and Silverblatt, Bernard L., to Westinghouse Electric Corporation. Emergency core cooling system for a nuclear reactor. 4,064,002, Cl. 176-38.000.
Desplanches, Gerard; Lazennec, Yvon; and Leboucq, Jacques, to Compagnie Generale d'Electricite S.A. Method of connecting an alkaline beta alumina part to an alpha alumina part. 4,064,209, Cl. 264-61.000.
Deulofeu, Jorge M. Articulated puppet. 4,063,381, Cl. 46-22.000.
DeVitto, Ronald Robert: *See—*
Raudys, Vytas Andrew; and DeVitto, Ronald Robert, 4,063,481, Cl. 83-199.000.
De Vos, Daniel; Michel, Paul-Marie; and Berger, Alfred, to Sovitec S.A. Process of making glass beads from liquid medium feedstock. 4,063,916, Cl. 65-21.000.
Dewdney, Thomas Gordon; Dowden, Dennis Albert; and Morris, Wyndham, to Imperial Chemical Industries Limited. Hexamethylene diamine by hydrogenation of adiponitrile in presence of an activated iron oxide catalyst. 4,064,172, Cl. 260-583.00K.
Diamond Power Specialty Corporation: *See—*
Foxworthy, Milton Kearney, 4,064,451, Cl. 324-207.000.
Diamond Shamrock Technologies S.A.: *See—*
de Nora, Vittorio; and de Nora, Oronzio, 4,064,021, Cl. 204-98.000.
Dias, J. Fleming; Karrer, Henry E.; and Tykulsky, Alexander, to Hewlett-Packard Company. High fidelity pressure transducer. 4,064,550, Cl. 361-283.000.

Dibner, Andrew S., to Lifeline Systems, Inc. Closed-loop emergency alarm and response system. 4,064,368, Cl. 179-5.00R.
Dickson, John Flackett; and Oakley, Raymond Edward, to Plessey Handel und Investments A.G. Content addressable memories. 4,064,494, Cl. 365-49.000.
Diebold Incorporated: *See—*
Stuy, Hans, 4,063,478, Cl. 83-100.000.
Diesel Equipment Limited: *See—*
Martin, Paul H.; and Martin, John C., 4,063,779, Cl. 298-22.00P.
Dietzel, Walter; Matusch, Siegfried; and Hentschel, Volkmar, to Braunschweigische Maschinenbauanstalt. Continuously operating sugar centrifuge. 4,063,959, Cl. 127-19.000.
Dir, Gary A.: *See—*
Haas, Werner E. L.; and Dir, Gary A., 4,064,453, Cl. 324-214.000.
Disston, Inc.: *See—*
Edgell, James Ensign; Lineback, Lynn David; and Paul, Richard Nelson, 4,064,447, Cl. 320-2.000.
Ditson, J. D., to Ingersoll-Rand Company. Preselected releasable threaded coupling member. 4,063,837, Cl. 403-307.000.
Dittmann, Larry Eugene, to AMP Incorporated. Battery post connector. 4,063,794, Cl. 339-230.00R.
Dixie Plating, Inc.: *See—*
Eidschun, Charles D., Jr., 4,064,019, Cl. 204-15.000.
Dixon, Herbert; Heinrich, Walter; and Morris, Gilbert, to Teledyne Electro-Mechanisms. Interconnected printed circuits and method of connecting them. 4,064,357, Cl. 174-68.500.
Dobrosielski, Stephen S.: *See—*
Mullen, John H.; and Dobrosielski, Stephen S., 4,064,381, Cl. 200-16.00A.
Dobrusskin, Alexander: *See—*
Krense, Horst; and Dobrusskin, Alexander, 4,064,416, Cl. 315-261.000.
Doby, William P., to Westinghouse Electric Corporation. Electric load research device including an enclosure having adjustable meter positions. 4,063,661, Cl. 220-293.000.
Dr. -Ing. Ludwig Pietzsch: *See—*
Wilken, Joachim; Wiemer, Karl-Heinz; and Kauer, Harald, 4,063,815, Cl. 356-29.000.
Domanski, Thadee, to Societe Chimique des Charbonnages. Protection circuits. 4,064,546, Cl. 361-33.000.
Dorn, Conrad P.; and Yang, Shu S., to Merck & Co., Inc. Peptide carbazates and pharmaceutical composition. 4,064,236, Cl. 424-177.000.
Dory, Jacques, to Realisations Ultrasoniques. Scanning. 4,063,451, Cl. 73-618.000.
Douglas, Lawrence M., to Polaroid Corporation. Compact self-developing camera with folded optical image path. 4,064,518, Cl. 354-86.000.
Dow Chemical Company, The: *See—*
Johnston, Howard, 4,063,928, Cl. 71-94.000.
Nafziger, John L.; and Motes, John M., 4,064,157, Cl. 260-453.0SP.
Peet, Norton P.; and Sunder, Shyam, 4,064,348, Cl. 544-137.000.
Soderquist, Frederick J.; Boyce, Harold D.; and Butts, William R., 4,064,187, Cl. 260-669.00R.
Dow Corning Corporation: *See—*
Chandra, Grish; and Griffiths, Brian John, 4,064,154, Cl. 260-448.20E.
Gant, George A. L., 4,064,027, Cl. 204-159.130.
Speier, John L., 4,064,155, Cl. 260-448.80R.
Dowden, Dennis Albert: *See—*
Dewdney, Thomas Gordon; Dowden, Dennis Albert; and Morris, Wyndham, 4,064,172, Cl. 260-583.00K.
Downey, Raymond E., to Goodyear Tire & Rubber Company, The. Sprayable-pressure sensitive adhesive composition. 4,064,094, Cl. 260-32.80A.
Downing, James H.; Kaiser, Robert H.; Murphy, William L.; and Vaughn, William R., to Union Carbide Corporation. Method for admixing solids in molten metal. 4,063,932, Cl. 75-61.000.
Downing, Neil Hugh; Brown, Edward Morris; and Towns, Edward Johnson, to Downing, Neil Hugh. Volume metering device having a float operated valve. 4,063,666, Cl. 222-455.000.
Downs, Dallas I.; Larson, Lory E.; and Schuler, Victor J., to Southern California Edison Company. Water intake and fish control system. 4,064,048, Cl. 210-160.000.
Drabek, Jozef: *See—*
Farooq, Saleem; Drabek, Jozef; Gsell, Laurenz; Karrer, Friedrich; and Meyer, Willy, 4,064,263, Cl. 424-285.000.
Drach, John E.; and Pendell, Barry J., to Amchem Products, Inc. Process for the manufacture of aliphatic phosphonic acids. 4,064,163, Cl. 260-502.40R.
Dravo Corporation: *See—*
Heaney, Donald F.; and Boal, Delbert L., 4,064.050, Cl. 210-293.000.
Dresser Industries, Inc.: *See—*
Biek, Paul Albert, 4,063,601, Cl. 173-93.600.
Canterbury, Robert Houston, 4,063,594, Cl. 166-325.000.
Klopping, Norman Conrad, 4,063,474, Cl. 81-52.40R.
Pessia, Thomas, 4,063,844, Cl. 408-204.000.
Youmans, Arthur H., 4,063,592, Cl. 166-67.000.
Drews, Robert E. Elevator platform structure. 4,063,619, Cl. 187-17.000.
Dreyfus, Gerard: *See—*
Lewiner, Jacques; and Dreyfus, Gerard, 4,064,539, Cl. 358-128.000.
Drum, Adam: *See—*
Schmidt, Oskar; Grunner, Erich; Tompich, Horst; Lenk, Gerhard; and Drum, Adam, 4,063,861, Cl. 425-542.000.
Drummond, Michael E.; and Robinson, John E., to Drummond Scientific Company. Calibrating means for a microdispenser. 4,063,662, Cl. 222-31.000.
Drummond Scientific Company: *See—*
Drummond, Michael E.; and Robinson, John E., 4,063,662, Cl. 222-31.000.
DuBois, Grant E.; and Crosby, Guy A., to Dynapol. Dihydrochalcone oligomers. 4,064,167, Cl. 260-511.
Dubois, Grant E.: *See—*
Johnson, William S.; and Dubois, Grant E., 4,064,185, Cl. 260-617.00R.
du Boisbaudry, Dominique: *See—*
Lepetit, Marc; Angelle, Philippe; Bodin, Jacques; and du Boisbaudry, Dominique, 4,064,504, Cl. 340-347.00P.
Duffy, James J., to Ford Motor Company. Rack and pinion power steering gear mechanism. 4,063,490, Cl. 91-467.000.
Duhault, Jacques: *See—*
Beregi, Laszlo; Hugon, Pierre; Duhault, Jacques; and Boulanger, Michelle, 4,064,245, Cl. 424-250.000.
Dukane Corporation: *See—*
Goehler, Rolf J.; and King, Charles W., 4,064,462, Cl. 330-2.000.
Dulux Australia Ltd.: *See—*
Gibson, David Vincent; and Leary, Bruce, 4,064,090, Cl. 260-29.40R.
Dumichen, Volker: *See—*
Markwitz, Wernhard; and Dumichen, Volker, 4,064,459, Cl. 325-67.000.
Duncan, Gary L.: *See—*
Bivans, David A.; and Duncan, Gary L., 4,064,315, Cl. 428-518.000.
Duncan, Richard Joseph, to Combustion Engineering, Inc. Hot leg relief system. 4,064,001, Cl. 176-38.000.
Dunkelberger, David L.: *See—*
Myers, Robert M.; Dunkelberger, David L.; and Carty, Daniel T., 4,064,197, Cl. 260-876.00R.
Dunn, George T.: *See—*
Choiniere, Alcide W.; Kutnyak, Thomas A.; and Dunn, George T., 4,063,988, Cl. 156-429.000.
Du Pont de Nemours, E. I., and Company: *See—*
Anolick, Colin; and Kutsch, Howard James, 4,063,713, Cl. 256-13.100.
Baker, W. Barry; and Clark, Donald G., 4,063,824, Cl. 417-43.000.
Booy, Max Lorens, 4,063,717, Cl. 366-75.000.
Bouchard, Robert Joseph; Brixner, Lothar Heinrich; and Popowich, Michael John, 4,063,341, Cl. 29-25.420.
Cherkofsky, Saul Carl; and Sharpe, Thomas Ray, 4,064,260, Cl. 424-270.000.
FitzGerald, Emerson B., 4,064,214, Cl. 264-147.000.
Gale, David M., 4,064,077, Cl. 260-2.00H.
Han, Jerry C-Y, 4,063,923, Cl. 71-86.000.
Higgins, James Francis, 4,063,956, Cl. 106-288.00B.
Hull, Donald Robert, 4,064,075, Cl. 252-511.000.
Kissa, Erik, 4,063,889, Cl. 8-168.00C.
Lore, Albert L., 4,064,067, Cl. 252-355.000.
Mrowca, Joseph J., 4,064,104, Cl. 260-45.9NP.
Patterson, Frank Knowles, 4,064,310, Cl. 428-427.000.
Steiner, Werner Douglas, 4,063,882, Cl. 8-92.000.
Tullio, Victor, 4,063,880, Cl. 8-41.00R.
Vassiliou, Eustathios, 4,064,303, Cl. 428-201.000.
Weigert, Frank Julian, 4,064,171, Cl. 260-581.000.
Durin, Michel, to Societe Anonyme Automobiles Citroen. Boiler burners. 4,063,871, Cl. 431-89.000.
DuRoss, Robert M.; and Aiken, Richard D., to SCM Corporation. Paper guide. 4,063,631, Cl. 197-142.000.
Durrum, Emmett L., to Eldex Laboratories Incorporated. Data recording apparatus. 4,064,512, Cl. 346-33.00R.
Duvlis, Zinon. Contamination prevention for operating areas. 4,063,495, Cl. 98-36.000.
Dvorikova, Raisa Alexeevna: *See—*
Korshak, Vasily Vladimirovich; Gribova, Irina Alexandrovna; Krasnov, Alexandr Petrovich; Teplyakov, Mikhail Mikhailovich; Elerdashvili, Georgy Vasilievich; Gureeva, Galina Ilinichna; Chebotarev, Valery Panteleimonovich; Dvorikova, Raisa Alexeevna; Sergeev, Vladimir Alexandrovich; and Kakauridze, Dali Mitrofanovna, 4,064,097, Cl. 260-37.00R.
Dwyer, James F. Holder for use with device for imprinting indicia on a flexible article. 4,063,506, Cl. 101-407.0BP.
Dyche, George E.: *See—*
King, Charles; and Dyche, George E., 4,063,821, Cl. 356-167.000.
Dykstra, Stanley J.; and Minielli, Joseph L., to Mead Johnson & Company. Substituted piperidines therapeutic process and compositions. 4,064,254, Cl. 424-267.000.
Dynachem Corporation: *See—*
Lipson, Melvin A.; Knoth, Dale W.; Custer, Walter D.; and Gilano, Michael N., 4,064,287, Cl. 427-53.000.
Dynapol: *See—*
DuBois, Grant E.; and Crosby, Guy A., 4,064,167, Cl. 260-511.
Dziedzic, Chester J., to GTE Sylvania Incorporated. Particulate product of self supporting spheres containing inorganic material and apparatus for producing same. 4,063,856, Cl. 425-5.000.
Dzus Fastener Co., Inc.: *See—*
Schenk, Peter, 4,063,335, Cl. 24-221.00R.
E.D.M. Co., Ltd.: *See—*
Abe, Moriaki, 4,063,500, Cl. 101-25.000.
E. J. Brooks Company: *See—*
Moberg, Sigurd M., 4,063,434, Cl. 70-34.000.
E. R. Squibb & Sons, Inc.: *See—*
Krapcho, John; and Turk, Chester F., 4,064,120, Cl. 260-239.00A.

Krapcho, John, 4,064,125, Cl. 260-258.000.
Meyers, Edward; Trejo, William H.; Pluscec, Josip; and Brown, William E., 4,064,013, Cl. 195-80.00R.
E-Z Rect-Metal Products Ltd.: *See—*
Husband, Wallace T.; and Larlee, Howard A., 4,063,835, Cl. 403-252.000.
Eagle, Lawrence G., to Borg-Warner Corporation. Pump impeller improvement. 4,063,846, Cl. 415-199.200.
Eastman, Alan D.; and Farha, Floyd, Jr., to Phillips Petroleum Company. Removal of acetylenic contaminants by copper-tin and/or lead zinc aluminate. 4,064,190, Cl. 260-681.50R.
Eastman Kodak Company: *See—*
Harris, Harry Wayne; Schaeffer, James Robert; and Snoke, Roy Eugene, 4,064,010, Cl. 195-62.000.
Kotlarchik, Carl, Jr.; Minsk, Louis M.; and Fletcher, George L., Jr., 4,064,168, Cl. 260-556.00A.
Eatock, Fred L., to Fairchild Camera and Instrument Corporation. Band gap voltage regulator circuit including a merged reference voltage source and error amplifier. 4,064,448, Cl. 323-22.00T.
Eaton, Bill W.; and Boundy, Donald G., to Caterpillar Tractor Co. Portable tire patch holding clamp and method. 4,063,986, Cl. 156-394.000.
Eaton, Homer L., to Eaton-Leonard Corporation. Apparatus for bending tubes. 4,063,441, Cl. 72-151.000.
Eaton-Leonard Corporation: *See—*
Eaton, Homer L., 4,063,441, Cl. 72-151.000.
Ebara-Udylite Co., Ltd.: *See—*
Kawasaki, Motoo; Mizumoto, Shozo; and Nawafune, Hidemi, 4,064,022, Cl. 204-105.00R.
Ebel, Julius Alex; and Mitchell, Ernest H. System for coating plated through hole surfaces. 4,064,290, Cl. 427-97.000.
Ebisu, Yoshimitsu: *See—*
Matsui, Iwao; and Ebisu, Yoshimitsu, 4,063,437, Cl. 70-358.000.
Ecke, George G., to PPG Industries, Inc. Bis(4-chlorophenyl)methyl methyl sulfoxide. 4,064,178, Cl. 260-607.0AR.
Econo-Therm Energy Systems Corporation: *See—*
Pech, Jan J., 4,063,521, Cl. 110-8.00A.
Economics Laboratory, Inc.: *See—*
Larson, Spencer Brian; and Salmonson, Duane Leroy, 4,063,663, Cl. 222-52.000.
Edelberg, Murray; Bonn, Theodore H.; and Schissler, Lloyd R., to Sperry Rand Corporation. Packed loop memory with data manipulation capabilities. 4,064,556, Cl. 364-900.000.
Edgell, James Ensign; Lineback, Lynn David; and Paul, Richard Nelson, to Disston, Inc. Cordless portable electrically powered device. 4,064,447, Cl. 320-2.000.
Edmonds, James T., Jr., to Phillips Petroleum Company. Production of arylene sulfide polymers. 4,064,114, Cl. 260-79.100.
Edstrom, Lennart, to Aktiebolaget Broderne Herrmann. Method and apparatus for cutting a continuously moving web. 4,063,476, Cl. 83-37.000.
Edward Hines Lumber Company: *See—*
Labellarte, Rocco A., 4,063,498, Cl. 100-176.000.
Edwards, Dalma Therman; and Strickland, C. Gene. Apparatus for washing and/or treating potatoes and other such fruits and vegetables. 4,063,565, Cl. 134-104.000.
Eichler, Kenneth M.: *See—*
Mandel, Alan F.; Kirsch, Andrew F.; and Eichler, Kenneth M., 4,063,620, Cl. 187-29.00R.
Eidschun, Charles D., Jr., to Dixie Plating, Inc. Continuous contact plater method. 4,064,019, Cl. 204-15.000.
Eiermann, Dankwart, to Wankel GmbH. Rotary piston internal combustion engine. 4,063,535, Cl. 123-8.130.
Eisai Co., Ltd.: *See—*
Hamano, Sachiyuki; Kanazawa, Tamotsu; and Kitamura, Shin-ichi, 4,064,169, Cl. 260-564.00R.
Yanaihara, Noboru; Igarashi, Toshiji; and Kunii, Youichi, 4,064,235, Cl. 424-177.000.
Ekman, Gunnar Olof: *See—*
Fossan, Kare Ragnvald; and Ekman, Gunnar Olof, 4,063,975, Cl. 149-92.000.
Elbatainer GmbH: *See—*
Volz, Dieter; Buchscheidt, Kurt; and Rech, Reiner, 4,063,990, Cl. 156-580.200.
Eldex Laboratories Incorporated: *See—*
Durrum, Emmett L., 4,064,512, Cl. 346-33.00R.
Electronics Sports Products, Inc.: *See—*
Weiss, Morris, 4,063,612, Cl. 180-195.000.
Elerdashvili, Georgy Vasilievich: *See—*
Korshak, Vasily Vladimirovich; Gribova, Irina Alexandrovna; Krasnov, Alexandr Petrovich; Teplyakov, Mikhail Mikhailovich; Elerdashvili, Georgy Vasilievich; Gureeva, Galina Ilinichna; Chebotarev, Valery Panteleimonovich; Dvorikova, Raisa Alexeevna; Sergeev, Vladimir Alexandrovich; and Kakauridze, Dali Mitrofanovna, 4,064,097, Cl. 260-37.00R.
Elfwing, Erik Wiktor; and Swenne, Lars Harry, to Nife Jungner AB. Method of manufacturing a nickel hydroxide electrode. 4,064,332, Cl. 429-223.000.
Eli Lilly and Company: *See—*
Campbell, Jack B., 4,064,127, Cl. 260-266.000.
Chauvette, Robert R., 4,064,343, Cl. 544-16.000.
Fukuda, David S.; Abbott, Bernard J.; and Archer, Robert A., 4,064,009, Cl. 195-51.00R.
Hamill, Robert L.; Stark, William M.; and DeLong, Donald C., 4,064,233, Cl. 424-118.000.
Paget, Charles J., 4,064,261, Cl. 424-270.000.
Elliot, Alexander; Lee, John Gerald; and Lever, Brian, to L. B. Holliday & Co. Limited. Dyeing methods. 4,063,877, Cl. 8-1.00A.
Ellis, Harold, to Delphic Research Laboratories, Inc. Methods for the manufacture and use of electrically conductive compositions and devices. 4,064,074, Cl. 252-506.000.
Eltra Corporation: *See—*
Badger, John P.; and Simonton, Robert D., 4,063,978, Cl. 156-82.000.
EMI Limited: *See—*
Lodge, James Alec, 4,063,792, Cl. 339-5.00L.
Endo, Takaya: *See—*
Fujiwhara, Mitsuto; Endo, Takaya; Kikuchi, Shoji; and Satoh, Ryosuke, 4,063,950, Cl. 96-66.300.
Enkhaus, Roland Roger; and Evert, John Paul, to Sperry Rand Corporation. Apparatus for mounting a cathode ray tube. 4,064,542, Cl. 358-245.000.
Enomoto, Hiroshi: *See—*
Murai, Hiromu; Ohata, Katsuya; Enomoto, Hiroshi; Chokai, Shoichi; Maehara, Mitsuhiro; Saito, Katsuhide; and Ozaki, Takayuki, 4,064,252, Cl. 424-266.000.
Envirotech Corporation: *See—*
Zekulin, Nikita; and Adams, George L., 4,063,457, Cl. 73-290.00V.
Eppensteiner, Frederick Walter; and Woehrle, R. E., to M & T Chemicals Inc. Anode structure for wire and strip line electroplating. 4,064,034, Cl. 204-286.000.
Erbacher, John K.: *See—*
King, Lowell A.; Brabson, George D., Jr.; Erbacher, John K.; Seegmiller, David W.; Fannin, Armand A., Jr.; and Viola, John T., 4,064,327, Cl. 429-112.000.
ESB Incorporated: *See—*
Messing, Terry Glen, 4,064,323, Cl. 429-86.000.
Escher Wyss Limited: *See—*
Miller, Helmut, 4,064,403, Cl. 290-52.000.
Esco Corporation: *See—*
Greer, Donald J.; and Olds, John R., 4,063,373, Cl. 37-115.000.
Etablissements Pierre Angenieux: *See—*
Masson, Andre A., 4,064,425, Cl. 362-33.000.
Eustace, Daniel J., to Exxon Research & Engineering Co. Metal-Halogenelectrochemical cell. 4,064,324, Cl. 429-101.000.
Evans, Clifford A.: *See—*
Mitchell, Wallace F.; and Evans, Clifford A., 4,063,342, Cl. 29-227.000.
Evans, Colin Ashcroft, to Plessey Handel und Investments A.G. Method of making electrical connections. 4,063,350, Cl. 29-628.000.
Evans, James M.; and Stevenson, Donald R., to SCM Corporation. High solids urethane coatings. 4,064,194, Cl. 260-859.00R.
Evatt, Humphry Robert: *See—*
Thomas, Ernest Hilton; and Evatt, Humphry Robert, 4,063,560, Cl. 128-303.100.
Evers, Robert C., to United States of America, Air Force. Perfluoroalkylene ether bibenzoxazole polymers. 4,064,109, Cl. 260-61.000.
Evers, William J.; Heinsohn Jr., Howard H.; and Vock, Manfred Hugo, to International Flavors & Fragrances Inc. Flavoring with α-oxy(oxo)mercaptans. 4,064,278, Cl. 426-535.000.
Evers, William J.; Heinsohn, Howard H., Jr.; and Vock, Manfred Hugo, to International Flavors & Fragrances Inc. Flavoring with α-oxy(oxo)mercaptans. 4,064,280, Cl. 426-535.000.
Evert, John Paul: *See—*
Enkhaus, Roland Roger; and Evert, John Paul, 4,064,542, Cl. 358-245.000.
EVG Entwicklungs-u. Verwertungs-Gesellschaft m.b.H.: *See—*
Gott, Hans; Ritter, Josef; Ritter, Klaus; and Ritter, Gerhard, 4,064,385, Cl. 219-56.000.
Exxon Nuclear Company, Inc.: *See—*
Long, John W.; Flora, Barney S.; and Ford, Kenneth L., 4,064,004, Cl. 176-78.000.
Exxon Production Research Company: *See—*
Homer, Joseph F., 4,063,650, Cl. 214-1.0BB.
Howell, James Damron; Beck, Robert William; Bruce, George Hayden; and McLain, John David, 4,063,602, Cl. 175-7.000.
Exxon Research & Engineering Co.: *See—*
Eustace, Daniel J., 4,064,324, Cl. 429-101.000.
Shaw, Robert F.; and Ghosh, Amal K., 4,064,522, Cl. 357-16.000.
Siskin, Michael; and Porcelli, Joseph J., 4,064,189, Cl. 260-676.00R.
F. J. Littell Machine Company: *See—*
Johnson, Kenneth C., 4,063,499, Cl. 100-215.000.
Faarbech, Jens. Clothes hanger. 4,063,670, Cl. 223-92.000.
Faber, Ulbe, to Burroughs Corporation. Data communications loop synchronizer. 4,064,486, Cl. 340-147.0SY.
Fabian, Wolfgang: *See—*
von Lauff, Hans Peter; Fabian, Wolfgang; and Hellstern, Heidrun, 4,063,957, Cl. 106-304.000.
Fairchild Camera and Instrument Corporation: *See—*
Eatock, Fred L., 4,064,448, Cl. 323-22.00T.
Hosack, Harold H., 4,063,992, Cl. 156-653.000.
Falco, Charles M.: *See—*
Wu, Cheng-Teh; Falco, Charles M.; and Kampwirth, Robert T., 4,064,029, Cl. 204-192.00S.
Falcone, Alfred S.: *See—*
Stone, W. Norman; and Falcone, Alfred S., 4,063,674, Cl. 228-173.00E.
Fannin, Armand A., Jr.: *See—*
King, Lowell A.; Brabson, George D., Jr.; Erbacher, John K.; Seegmiller, David W.; Fannin, Armand A., Jr.; and Viola, John T., 4,064,327, Cl. 429-112.000.
Farge, Daniel; Jossin, Alain; Ponsinet, Gerard; and Reisdorf, Daniel, to

Rhone-Poulenc Industries. Thiazolo[3,4-b]isoquinoline derivatives and pharmaceutical compositions containing them. 4,064,247, Cl. 424-258.000.
Farha, Floyd, Jr.: *See—*
Eastman, Alan D.; and Farha, Floyd, Jr., 4,064,190, Cl. 260-681.50R.
Farish, Owen: *See—*
Hundstad, Richard L.; and Farish, Owen, 4,064,465, Cl. 331-94.5PE.
Farooq, Saleem; Drabek, Jozef; Gsell, Laurenz; Karrer, Friedrich; and Meyer, Willy, to Ciba-Geigy Corporation. 4,5-Benzospiro(2,4)-heptane (and hepta-4,6-diene)-1-carboxylic acid esters and compositions containing same. 4,064,263, Cl. 424-285.000.
Farrall, George A.; Gilhooley, William A.; and Hudda, Frank G., to General Electric Company. Method of increasing voltage withstanding capability of vacuum interrupters. 4,063,991, Cl. 156-645.000.
Faulhaber, Gerhard; Fuetterer, Hugo; Petersen, Harro; and Schwab, Hermann, to BASF Aktiengesellschaft. Transfer printing of cellulosic fabrics and transfer for use therein. 4,063,879, Cl. 8-2.50A.
FBW Enterprises: *See—*
Bergeson, Haven E.; and Fuller, Mark W., 4,064,414, Cl. 315-208.000.
Febvre, Henri Lucien: *See—*
Choay, Jean; Trolard, Paul; and Febvre, Henri Lucien, 4,064,007, Cl. 195-1.800.
Federer, Fritz: *See—*
Neumann, Henning; and Federer, Fritz, 4,063,320, Cl. 9-2.00A.
Feeds and Feeding Research, Inc.: *See—*
Anthony, Wilson Brady, 4,064,275, Cl. 426-53.000.
Feldkamper, Richard: *See—*
Achelpohl, Fritz; and Feldkamper, Richard, 4,063,693, Cl. 242-67.10R.
Felker, Paul J.; and Owen, Shubel H. Material mixer-triturator. 4,063,715, Cl. 366-187.000.
Fettes, Donald G.: *See—*
Mitchell, H. Charles; and Fettes, Donald G., 4,063,570, Cl. 137-454.200.
Feuerlein, Peter, to BUSS AG. Spherical storage tank for gases and liquids, supporting base therefor. 4,063,394, Cl. 52-294.000.
Fevre, Andre: *See—*
Boutet, Camille; and Fevre, Andre, 4,063,720, Cl. 266-167.000.
F'Geppert, Erwin, to United States of America, Army. Speed change and reverser device. 4,063,467, Cl. 74-689.000.
Fiat Societa Per Azioni: *See—*
Lampredi, Aurelio, 4,063,537, Cl. 123-32.00B.
Pace, Antonino, 4,063,540, Cl. 123-119.00R.
Fiber Glass Systems, Inc.: *See—*
Michael, Vesta F., 4,063,838, Cl. 403-343.000.
Fichtel & Sachs AG: *See—*
Bergles, Eduard, 4,063,469, Cl. 74-781.00B.
Finkel Outdoor Products, Inc.: *See—*
Militano, Vincent, 4,063,836, Cl. 403-263.000.
Firestone Tire & Rubber Company, The: *See—*
Oberster, Arthur Eugene; and Lawson, David Francis, 4,064,095, Cl. 260-37.00R.
Fischer, Artur. Arrangement for and a method of anchoring a mounting element in a hole of masonry and the like. 4,063,582, Cl. 151-41.700.
Fischer, Rolf: *See—*
Weitz, Hans-Martin; and Fischer, Rolf, 4,064,124, Cl. 260-250.00B.
Fisher, Edward William, to Bailey Meter Company. Combustible gases detector. 4,063,898, Cl. 23-254.00E.
Fisons Limited: *See—*
Augstein, Joachim; Cairns, Hugh; Hunter, Dennis; and King, John, 4,064,256, Cl. 424-269.000.
Gates, Peter Stuart, 4,064,250, Cl. 424-282.000.
FitzGerald, Emerson B., to Du Pont de Nemours, E. I., and Company. Process for making polytetrafluoroethylene yarn. 4,064,214, Cl. 264-147.000.
Fitzpatrick, Michael D.: *See—*
Cricchi, James R.; and Fitzpatrick, Michael D., 4,064,405, Cl. 307-205.000.
Flaig, Ulrich: *See—*
Gorille, Ingo; Borst, Wolfgang; Klotzner, Winfried; Ott, Karl; Moller, Heinz; Honig, Gunter; Kiencke, Uwe; Zechnall, Martin; Flaig, Ulrich; Schulz, Alfred; and Pagel, Ernst-Olav, 4,063,539, Cl. 123-117.00D.
Flamemaster Corporation: *See—*
Peterson, Roger L.; and Joyce, George M., 4,064,359, Cl. 174-107.000.
Fleming, Robert W.; Sill, Arthur D.; Albrecht, William L.; and Horgan, Stephen W., to Richardson-Merrell Inc. Bis-basic ketones of fluorene and fluorenone. 4,064,347, Cl. 544-79.000.
Fletcher, George L., Jr.: *See—*
Kotlarchik, Carl, Jr.; Minsk, Louis M.; and Fletcher, George L., Jr., 4,064,168, Cl. 260-556.00A.
Fletcher, Kenneth John: *See—*
Schiffarth, Josef; Lorkin, Clive Graham; and Fletcher, Kenneth John, 4,063,931, Cl. 75-10.00R.
Flider, Frank S., to Justrite Manufacturing Co. Non-metallic safety filling container. 4,063,667, Cl. 222-470.000.
Flora, Barney S.: *See—*
Long, John W.; Flora, Barney S.; and Ford, Kenneth L., 4,064,004, Cl. 176-78.000.
Follows, James, to Vanguard Plastics Ltd. Bar spacer for reinforced concrete. 4,063,397, Cl. 52-684.000.
Fomichev, Vladimir Mikhailovich: *See—*
Sosulnikov, Gleb Borisovich; Fomichev, Vladimir Mikhailovich; Tsiporina, Ljudmila Alexandrovna; Selivanov, Mikhail Prokhorovich; Bobrakov, Lev Vladimirovich; Axenov, Alexandr Sergeevich; Alexandrov, Dmitry Vladimirovich; Ugrjumov, Maxim Semenovich, deceased; Ugrjumova, Raida Nikolaevna, administratrix; Ugrjumov, Nikolai Maximovich, administrator; and Tjumina, Lidia Maximovna, administratrix, 4,063,568, Cl. 137-270.000.
Ford, Hugh: *See—*
Dain, Richard James; and Ford, Hugh, 4,063,940, Cl. 75-213.000.
Ford, Kenneth L.: *See—*
Long, John W.; Flora, Barney S.; and Ford, Kenneth L., 4,064,004, Cl. 176-78.000.
Ford Motor Company: *See—*
Duffy, James J., 4,063,490, Cl. 91-467.000.
Fordyce, Gary L.; Hein, Richard D.; Sandels, Fred V.; and Britton, James E., to General Tire & Rubber Company, The. Expansion joint seal assembly. 4,063,840, Cl. 404-69.000.
Formac International, Inc.: *See—*
Martin, Ronald T., 4,064,299, Cl. 428-102.000.
Formica Corporation: *See—*
Power, George Edward; and Wulfekotter, Dudley, 4,064,297, Cl. 428-86.000.
Forrest, David L.: *See—*
Tracy, Gordon A.; and Forrest, David L., 4,063,749, Cl. 280-423.00R.
Forschirm, Alex S., to Celanese Corporation. Method for improving the water absorption of polyester fibers. 4,063,887, Cl. 8-130.100.
Forsyth, Bruce Adam: *See—*
Birchall, George Richard; Harney, Donald William Gerald; and Forsyth, Bruce Adam, 4,064,266, Cl. 424-304.000.
Foseco International Limited: *See—*
Schiffarth, Josef; Lorkin, Clive Graham; and Fletcher, Kenneth John, 4,063,931, Cl. 75-10.00R.
Fossan, Kare Ragnvald; and Ekman, Gunnar Olof, to Nitro Nobel AB. Colored composition of explosives. 4,063,975, Cl. 149-92.000.
Foster Grant Co., Inc.: *See—*
Papetti, Stelvio, 4,064,116, Cl. 260-880.00R.
Foster, Robert E.: *See—*
O'Connell, Richard A.; and Foster, Robert E., 4,063,888, Cl. 8-149.000.
Fox, Lee K.: *See—*
Beningson, Robert M.; Beningson, Herbert E.; Menon, Narayanankutty V. P.; Nadkarni, Ravindra M.; Lamb, Thomas J.; Fox, Lee K.; and Keary, William V., 4,063,903, Cl. 44-2.000.
Foxworthy, Milton Kearney, to Diamond Power Specialty Corporation. Hysteresis compensated reed switch assembly for a position indicating system. 4,064,451, Cl. 324-207.000.
Fraas, Lewis M., to Hughes Aircraft Company. Planar reactive evaporation method for the deposition of compound semiconducting films. 4,063,974, Cl. 148-175.000.
Francis, John Frederick, to Gillette Company, The. Safety razors. 4,063,357, Cl. 30-346.580.
Francis, Theodore R. Vibratory cleaning and coating system. 4,063,564, Cl. 134-66.000.
Frank, Cary: *See—*
Smith, David L.; Frank, Cary; Lupton, Mary; and Lupton, Stephanie, 4,063,319, Cl. 5-334.00R.
Franklin, Alan D., to United States of America, Health, Education and Welfare. Electrochemical growth of calcium hydroxide crystals from electrolyte solutions. 4,064,023, Cl. 204-130.000.
Franklin, James G.: *See—*
Gasser, Rupert J.; and Franklin, James G., 4,063,994, Cl. 159-49.000.
Franklin Mint Corporation: *See—*
Simpson, James W.; Cosgarea, Andrew, Jr.; and Bankert, Richard D., 4,063,346, Cl. 29-527.700.
Franssen, Nico Valentinus, to U.S. Philips Corporation. Signal transmission circuit comprising a coder and a decoder. 4,064,505, Cl. 340-347.0DD.
Franz Plasser Bahnbaumaschinen-Industriegesellschaft m.b.H.: *See—*
Theurer, Josef, 4,063,516, Cl. 104-12.000.
Fraser, Charles D. Collapsible camp pack and game carrier. 4,063,744, Cl. 280-42.000.
Fredenberg, James David: *See—*
Passler, Herbert Edwin; and Fredenberg, James David, 4,063,349, Cl. 29-627.000.
Freudenschuss, Otto; Keznickl, Eduard; and Scheiber, Robert, to Vockenhuber, Karl; and Hauser, Raimund. Still photographic or movie camera. 4,064,520, Cl. 354-196.000.
Friedberg, Herbert L., to Shelburne Company, The. Method of preparing zoysia sod for packaging and shipment. 4,063,385, Cl. 47-58.000.
Friedrich Deckel Aktiengesellschaft: *See—*
Kagerer, Franz, 4,063,488, Cl. 90-11.00D.
Fritsch, Carl William, Jr.; and Wolfe, Robert Wade, to GTE Sylvania Incorporated. Low thermal expansion ceramics of cordierite solid solution and method for producing same. 4,063,955, Cl. 106-39.600.
Fritzmeier AG: *See—*
Wingen, Wilhelm, 4,063,723, Cl. 267-131.000.
Frogermann, Gerd: *See—*
Vogt, Hans-Wilhelm; and Frogermann, Gerd, 4,063,458, Cl. 73-355.00R.
Fromknecht, Charles T., to Singer Company, The. Vacuum cleaner suction control. 4,063,326, Cl. 15-327.00R.

Fruhwald, John M.: *See—*
Russell, James B.; Zewe, James R.; and Fruhwald, John M., 4,064,487, Cl. 340-168.00S.
Fuetterer, Hugo: *See—*
Faulhaber, Gerhard; Fuetterer, Hugo; Petersen, Harro; and Schwab, Hermann, 4,063,879, Cl. 8-2.50A.
Fuhrmann, Hans. Method of and apparatus for automatically detecting traces of organic solvent vapors in air. 4,063,446, Cl. 73-1.00G.
Fuhrmann, Siegfried, to Kabel-und Metallwerke Gutehoffnungshutte AG. Fitting for conduits with corrugated tubes and hoses. 4,063,757, Cl. 285-149.000.
Fuji Photo Film Co., Ltd.: *See—*
Toyama, Tadao; Watanabe, Masaru; and Kitago, Harumasa, 4,063,507, Cl. 101-467.000.
Fuji Xerox Co., Ltd.: *See—*
Tamura, Yoshikazu, 4,063,813, Cl. 355-77.000.
Fujii, Setuo: *See—*
Kawaguchi, Toshiro; Fujii, Setuo; and Matsui, Katsuhiko, 4,063,483, Cl. 83-382.000.
Fujioka, Tokio; Kinugasa, Masayuki; Iizumi, Shozo; Teshima, Shizuhiro; and Shimizu, Isamu, to Nisshin Steel Co., Ltd. Oxidation-resisting austenitic stainless steel. 4,063,935, Cl. 75-128.00C.
Fujita, Seigoro; and Kitahori, Tojiro, to Kanzaki Paper Manufacturing Company, Ltd.; and Toray Industries, Inc. Coated synthetic paper adapted for offset printing and method for production thereof. 4,064,304, Cl. 428-207.000.
Fujitsu Limited: *See—*
Takezono, Takashi; and Ando, Hisashige, 4,064,483, Cl. 340-146.1AL.
Fujiwhara, Mitsuto; Endo, Takaya; Kikuchi, Shoji; and Satoh, Ryosuke, to Konishiroku Photo Industry Co., Ltd. DIR coupler that forms colorless reaction product. 4,063,950, Cl. 96-66.300.
Fukami, Yoshio: *See—*
Itoi, Nobuo; Shimamura, Teruo; Fukami, Yoshio; Mori, Hidetoshi; and Miwa, Kenji, 4,063,816, Cl. 356-93.000.
Shimamura, Teruo; Fukami, Yoshio; and Mori, Hidetoshi, 4,063,817, Cl. 356-93.000.
Fukasawa, Akira, to Agency of Industrial Science & Technology. Lead dioxide electrode. 4,064,035, Cl. 204-290.00R.
Fukuba, Kozo; and Miyazaki, Minematsu, to Sumitomo Chemical Company, Limited. Flame-resistant plaster board and its manufacture. 4,064,317, Cl. 428-537.000.
Fukuda, David S.; Abbott, Bernard J.; and Archer, Robert A., to Eli Lilly and Company. Novel 3-(oxygenated alkyl)-1,9-dihydroxy and 1-hydroxy-9-keto dibenzo[b,d]pyrans. 4,064,009, Cl. 195-51.00R.
Fukunaga, Kazuo: *See—*
Nakai, Junkichi; and Fukunaga, Kazuo, 4,064,030, Cl. 204-192.00E.
Fukutani, Hideo; Miura, Konoe; Takahashi, Yoshihiro; and Torige, Kazuo, to Mitsubishi Chemical Industries, Ltd. Photosensitive composition. 4,063,953, Cl. 96-115.00R.
Fuller Company: *See—*
Paul, Kermit D., 4,063,855, Cl. 418-84.000.
Willis, Daniel A., 4,063,686, Cl. 239-404.000.
Fuller, Mark W.: *See—*
Bergeson, Haven E.; and Fuller, Mark W., 4,064,414, Cl. 315-208.000.
Fuller, Robert T.; and Sanders, Robert J. Display system for samples. 4,063,648, Cl. 211-45.000.
Furst, Andor: *See—*
Cassal, Jean-Marie; Furst, Andor; and Meier, Werner, 4,064,173, Cl. 260-586.00E.
Furukawa, Mitsuhiko: *See—*
Ogawa, Kazuki; Miyahara, Michito; and Furukawa, Mitsuhiko, 4,063,908, Cl. 51-307.000.
G. D. Searle & Co.: *See—*
Collins, Paul W.; and Pappo, Raphael, 4,064,350, Cl. 560-121.000.
Weier, Richard M., 4,064,177, Cl. 260-590.0FB.
G. Siempelkamp & Co.: *See—*
Axer, Heinrich; Michels, Wolfgang; and Ufermann, Werner, 4,063,858, Cl. 425-81.000.
Gaertner, Van R.; and Hamm, Philip C., to Monsanto Company. N-(2-hydroxyalkyl) derivatives of N-phosphonomethylglycine for treatment of sugarcane. 4,063,922, Cl. 71-86.000.
Gaicki, Stanley, to Motorola, Inc. Ultrasonic bonding head. 4,063,673, Cl. 228-1.00R.
Gaines, Ethel May: *See—*
Gaines, Fredrick William, Jr.; and Gaines, Ethel May, 4,064,330, Cl. 429-218.000.
Gaines, Fredrick William, Jr.; and Gaines, Ethel May. Carbon electrode assembly for lithium fused salt battery. 4,064,330, Cl. 429-218.000.
Gajski, Daniel Danko; Tulpule, Bhalchandra Ramchandra; and Vora, Chandrakant Ratilal, to Burroughs Corporation. High speed modular arithmetic apparatus having a mask generator and a priority encoder. 4,064,421, Cl. 364-716.000.
Gale, David M., to Du Pont de Nemours, E. I., and Company. Toughened articles composed of linear aromatic polymers. 4,064,077, Cl. 260-2.00H.
Gallay, Jean Jacques: *See—*
Huff, Roger K.; Gallay, Jean Jacques; and Kuhne, Manfred, 4,064,243, Cl. 424-248.500.
Gallo, Michael A.; and Wang, Der-I, to Rhodia, Inc. Synergistic pesticidal mixtures of phosalone and malathion and process for controlling arthropods therewith. 4,064,237, Cl. 424-200.000.
Gannon, Marc Jay; and Gunter, Daniel Lee. Ophthalmic measuring instrument. 4,063,805, Cl. 351-6.000.
Gant, George A. L., to Dow Corning Corporation. UV curable composition. 4,064,027, Cl. 204-159.130.
Gargini, Eric John West, to Communications Patents Limited. Coaxial wired broadcasting system with tone responsive program selectors. 4,064,460, Cl. 325-308.000.
Garner, Alex Victor: *See—*
Russell, Kenneth Foden; and Garner, Alex Victor, 4,064,375, Cl. 179-110.00A.
Garrett, Donald E. Energy production from solar ponds. 4,063,419, Cl. 60-641.000.
Garron, Carlos Subieta, to CSG Enterprises, Inc. Electric motor having permanent magnets and resonant circuit. 4,064,442, Cl. 318-254.000.
Gasc, Jean-Claude: *See—*
Coussediere, Daniel; and Gasc, Jean-Claude, 4,064,239, Cl. 536-17.000.
Gasser, Rupert J.; and Franklin, James G., to Societe d'Assistance Technique pour Produits Nestle S.A. Process for production of powdered tea product. 4,063,994, Cl. 159-49.000.
Gates, Peter Stuart, to Fisons Limited. Insecticidal benzodioxol-4-yl carbamates and intermediates thereof. 4,064,250, Cl. 424-282.000.
Gavrilin, Eduard Ivanovich: *See—*
Bochkarev, Ellin Petrovich; Maslov, Vadim Nikolaevich; Voronin, Nikolai Georgievich; Korobov, Oleg Evgenievich; and Gavrilin, Eduard Ivanovich, 4,063,529, Cl. 118-49.100.
Gebr. Hofmann KG: *See—*
Himmler, Gunther, 4,063,462, Cl. 73-483.000.
Gebrueder Buehler AG: *See—*
Anderegg, Hans Rudolf; and Muller, Karl, 4,063,572, Cl. 137-862.000.
Geiszler, Theodore D.; and Mongeon, Ronald W., to Stellar Systems, Inc. Intrusion warning system utilizing an electric field. 4,064,499, Cl. 340-258.00C.
Gelius, Siegfried; Wieczorek, Hanne-Lore; Triller, Adolf; and Nielsen, Nils, to Optische Werke G. Rodenstock. Perimetric eye testing device. 4,063,807, Cl. 351-24.000.
General Atomic Company: *See—*
Arya, Satya Prakash; and Godsin, Walter Woodrow, 4,063,962, Cl. 134-8.000.
Leary, David F.; Cooper, Roy G.; and Miertschin, Gary N., 4,064,204, Cl. 264-.500.
General Comminution Inc.: *See—*
Szego, Laszlo L., deceased, 4,063,687, Cl. 241-110.000.
General Dynamics Corporation: *See—*
Carter, William M.; Klauschie, Robert W.; and Schillreff, George H., 4,063,485, Cl. 89-1.816.
General Electric Company: *See—*
Anthony, Thomas R.; and Cline, Harvey E., 4,063,966, Cl. 148-1.500.
Ashley, Eugene, 4,063,486, Cl. 89-7.000.
Barkan, Philip, 4,064,383, Cl. 200-144.00B.
Cline, Harvey E.; and Anthony, Thomas R., 4,063,965, Cl. 148-1.500.
Cote, Paul T., 4,064,431, Cl. 362-4.000.
Farrall, George A.; Gilhooley, William A.; and Hudda, Frank G., 4,063,991, Cl. 156-645.000.
Hay, Allan S., 4,064,158, Cl. 260-465.00F.
Hay, Allan S., 4,064,179, Cl. 260-609.00F.
Hughes, William C.; Nelson, Wayne B.; and Possin, George E., 4,064,558, Cl. 364-900.000.
Judd, Edwin B., 4,063,793, Cl. 339-60.00R.
Kirkpatrick, Conilee G.; Norton, James F.; and Possin, George E., 4,064,495, Cl. 365-103.000.
Lambiris, Sotiris, 4,063,872, Cl. 431-285.000.
Lee, Minyoung; Szala, Lawrence E.; and Hibbs, Louis E., Jr., 4,063,907, Cl. 51-295.000.
Lyons, Prentice Coleman, 4,063,450, Cl. 73-579.000.
Mark, Victor, 4,064,101, Cl. 260-45.85H.
Yang, Kei-Hsiung, 4,064,439, Cl. 250-315.00A.
General Kinetics, Incorporated: *See—*
King, Charles; and Dyche, George E., 4,063,821, Cl. 356-167.000.
General Mills, Inc.: *See—*
Hallstrom, Curtis H.; Glass, Brian E.; Touba, Ali R.; and Daravingas, George V., 4,064,282, Cl. 426-559.000.
Saari, Albert L.; and Anderson, Ray H., 4,064,138, Cl. 548-344.000.
General Motors Corporation: *See—*
Allen, Robert L., 4,063,845, Cl. 415-134.000.
Gener'l Refractories Company: *See—*
Gilmour, John B.; Mehta, Praful K. A.; Mirliss, Melvin J.; and Nielsen, Richard B., 4,064,071, Cl. 252-455.00R.
General Tire & Rubber Company, The: *See—*
Fordyce, Gary L.; Hein, Richard D.; Sandels, Fred V.; and Britton, James E., 4,063,840, Cl. 404-69.000.
Georg Fischer Aktiengesellschaft: *See—*
Aeschbacher, Hans Manuel, 4,063,329, Cl. 15-306.00A.
Georg, Werner; and Merten, Gerhard, to Gewerkschaft Eisenhutte Westfalia. Apparatus for loading material. 4,063,781, Cl. 299-34.000.
Gerson, Herman; Santimauro, John Francis; and Lerner, Lawrence Robert, to Harmon Colors Corporation. Process for making quinacridone and its derivatives. 4,064,129, Cl. 260-279.0QA.
Gerson, Ronald L.; and Caprio, Lawrence A., to Louis M. Gerson Co., Inc. Strainer improvement. 4,064,053, Cl. 210-497.0FB.
Gesellschaft fur Biotechnologische Forschung mbH: *See—*
Mayer, Hubert; and Schutte, Horst, 4,064,011, Cl. 195-65.000.
Gewerkschaft Eisenhutte Westfalia: *See—*
Georg, Werner; and Merten, Gerhard, 4,063,781, Cl. 299-34.000.
Jutte, Hans; and Stuckmann, Dieter, 4,063,425, Cl. 61-85.000.

Ghosh, Amal K.: *See—*
Shaw, Robert F.; and Ghosh, Amal K., 4,064,522, Cl. 357-16.000.
Giacino, Christopher: *See—*
Withycombe, Donald Arthur; Hruza, Anne; Vock, Manfred Hugo; Giacino, Christopher; Mookherjee, Braja Dulal; Pittet, Alan Owen; and Schreiber, William L., 4,064,279, Cl. 426-535.000.
Gibard, Andre, to Rhone-Poulenc Industries. Curable, storage-stable liquid organopolysiloxane compositions. 4,064,096, Cl. 260-37.0SB.
Gibson, Charles Arnold; and Theiling, Louis Foster, Jr., to Union Carbide Corporation. Hydrogenation of styrene oxide to produce 2-phenylethanol. 4,064,186, Cl. 260-618.00H.
Gibson, David Vincent; and Leary, Bruce, to Dulux Australia Ltd. Aqueous coating composition of epoxy-amine adduct and an acid with cross-linker. 4,064,090, Cl. 260-29.40R.
Gibson, Howard M.: *See—*
Sliz, Edward; Brooks, John O.; and Gibson, Howard M., 4,063,345, Cl. 29-522.000.
Gilano, Michael N.: *See—*
Lipson, Melvin A.; Knoth, Dale W.; Custer, Walter D.; and Gilano, Michael N., 4,064,287, Cl. 427-53.000.
Gilger, Lloyd Dwight. Self-cleaning filter apparatus. 4,064,046, Cl. 210-94.000.
Gilhooley, William A.: *See—*
Farrall, George A.; Gilhooley, William A.; and Hudda, Frank G., 4,063,991, Cl. 156-645.000.
Gilkey, George M.: *See—*
MacKay, John A.; and Gilkey, George M., 4,064,382, Cl. 200-19.00R.
Gillette Company, The: *See—*
Francis, John Frederick, 4,063,357, Cl. 30-346.580.
Oldroyd, Brian; Pentney, Harry; and Terry, John Charles, 4,063,354, Cl. 30-47.000.
Gilmour, John B.; Mehta, Praful K. A.; Mirliss, Melvin J.; and Nielsen, Richard B., to General Refractories Company. Process for agglomerating expanded perlite fines. 4,064,071, Cl. 252-455.00R.
Girling Limited: *See—*
Heibel, Helmut, 4,063,621, Cl. 188-72.600.
Glass, Brian E.: *See—*
Hallstrom, Curtis H.; Glass, Brian E.; Touba, Ali R.; and Daravingas, George V., 4,064,282, Cl. 426-559.000.
Glaxo Laboratories Limited: *See—*
Cook, Martin Christopher; Gregory, Gordon Ian; and Bradshaw, Janice, 4,064,346, Cl. 544-30.000.
Glenn, William E., Jr.: *See—*
Kaiser, Arthur; Moore, James Kenneth; and Glenn, William E., Jr., 4,064,530, Cl. 358-36.000.
Glick, Leslie P.: *See—*
Gunewardena, Shelly J.; Glick, Leslie P.; and Sakihara, Yoshinobu F., 4,064,472, Cl. 336-65.000.
Glory Kogyo Kabushiki Kaisha: *See—*
Nakai, Shiro; and Nakamura, Minoru, 4,063,399, Cl. 53-59.00R.
Gluck, Herbert: *See—*
Roth, Michael; Bosch, Erhard; and Gluck, Herbert, 4,063,958, Cl. 106-308.00Q.
Godsin, Walter Woodrow: *See—*
Arya, Satya Prakash; and Godsin, Walter Woodrow, 4,063,962, Cl. 134-8.000.
Goehler, Rolf J.; and King, Charles W., to Dukane Corporation. Acoustic feedback peak elimination unit. 4,064,462, Cl. 330-2.000.
Goff, Robert Roy: *See—*
Wheatley, William; Goff, Robert Roy; and Wheatley, William Charles, 4,064,366, Cl. 179-2.00R.
Going, Robert E.; Loehman, Ronald E.; and Chan, Ming Sam. User formed mouthguard. 4,063,552, Cl. 128-136.000.
Goldsborough, John P.: *See—*
Wright, David L.; and Goldsborough, John P., 4,063,803, Cl. 350-319.000.
Goltsov, Viktor Alexeevich; Timofeev, Nikolai Ivanovich; and Guschin, Sergei Grigorievich. Palladium-based alloy. 4,063,937, Cl. 75-172.00G.
Goodyear Tire & Rubber Company, The: *See—*
Burroway, Gary L.; and Maximovich, Michael J., 4,064,092, Cl. 260-29.6PM.
Downey, Raymond E., 4,064,094, Cl. 260-32.80A.
Lal, Joginder; and Sandstrom, Paul H., 4,064,335, Cl. 526-128.000.
Rongone, Ronald L., 4,063,979, Cl. 156-123.00R.
Goranov, Hristo Vladimirov: *See—*
Vassilev, Vassil Ivan~v; Goranov, Hristo Vladimirov; and Sivchev, Sivcho Hristov, 4,063,892, Cl. 23-230.00B.
Gorbaty, Martin L.: *See—*
Singhal, Gopal H.; Gorbaty, Martin L.; Minday, Richard M.; and Li, Norman N., 4,064,040, Cl. 210-22.00R.
Gordon, Harry W.; and Schaffner, Carl P., to Schmid Laboratories, Inc. Polyenic macrolide compositions. 4,064,230, Cl. 424-19.000.
Gordon, Roger G., to Safe Rack, Inc. Coin chutes with funnel for selection therebetween. 4,063,629, Cl. 194-1.00K.
Gorille, Ingo; Borst, Wolfgang; Klotzner, Winfried; Ott, Karl; Moller, Heinz; Honig, Gunter; Kiencke, Uwe; Zechnall, Martin; Flaig, Ulrich; Schulz, Alfred; and Pagel, Ernst-Olav, to Robert Bosch G.m.b.H. System to control timing of cyclically repetitive events, particularly automotive ignition. 4,063,539, Cl. 123-117.00D.
Gorini, Robert Francis; Johnson, Herbert; and Sillars, Frederick Stirling, to USM Corporation. Machine for stiffening portions of sheet material. 4,063,527, Cl. 118-5.000.
Gorman-Rupp Company, The: *See—*
Smith, Edward M., 4,063,708, Cl. 251-149.400.
Gorog, Sandor: *See—*
Toth, Edit; Torley, Jozsef; Palosi, Eva; Szeberenyi, Szaboles; Szporny, Laszlo; Gorog, Sandor; and Meszaros, Csilla, 4,064,121, Cl. 260-239.00B.
Goss, Lloyd Chambers, to Control Data Corporation. Magnetic coupling of disk file module. 4,064,545, Cl. 360-133.000.
Gott, Hans; Ritter, Josef; Ritter, Klaus; and Ritter, Gerhard, to EVG Entwicklungs-u. Verwertungs-Gesellschaft m.b.H. Multipoint mesh welding machine. 4,064,385, Cl. 219-56.000.
Gottstein, William J.: *See—*
Kaplan, Murray A.; Gottstein, William J.; and Granatek, Alphonse P., 4,064,345, Cl. 544-27.000.
Grabovez, Victor M.: *See—*
Kleykamp, Donald L.; Neroni, Peter J.; Grabovez, Victor M.; and Holden, Homer N., 4,063,790, Cl. 339-16.00R.
Graham, Donald K.: *See—*
Johnson, Roy Henry; and Graham, Donald K., 4,063,905, Cl. 48-180.00R.
Graham, MacKellar K., to Sperry Rand Corporation. Fluid power transmission system. 4,063,605, Cl. 177-225.000.
Gram, Martin M., to MTS Systems Corporation. Adjustable space frame for testing machine. 4,063,453, Cl. 73-103.000.
Gramm, Ine: *See—*
Uhlig, Fritz; and Gramm, Ine, 4,063,949, Cl. 96-27.00E.
Granatek, Alphonse P.: *See—*
Kaplan, Murray A.; Gottstein, William J.; and Granatek, Alphonse P., 4,064,345, Cl. 544-27.000:
Granberg, Fred. Sash lock. 4,063,766, Cl. 292-336.000.
Grano, Joseph, Jr., to Monsanto Company. Fertilizer rods. 4,063,919, Cl. 71-11.000.
Grant, Robert F. Display and storage device for small articles. 4,063,639, Cl. 206-0.820.
Grat, Felix R., to Rame-Hart, Inc. Workpiece, and container and contents, inspecting apparatus and method. 4,063,823, Cl. 356-197.000.
Graul, Jurgen; and Murrmann, Helmuth, to Siemens Aktiengesellschaft. Method of producing a doped zone of one conductivity type in a semiconductor body utilizing an ion-implanted polycrystalline dopant source. 4,063,967, Cl. 148-1.500.
Graven, Richard G.; and Sailor, Robert A., to Mobil Oil Corporation. Temporary shutdown of co-combustion devices. 4,064,037, Cl. 208-120.000.
Graves, Wayne H.: *See—*
Klatt, William M.; Graves, Wayne H.; and Buuck, Robert E., 4,063,548, Cl. 128-2.00R.
Grede Foundries, Inc.: *See—*
Behring, James A., 4,063,944, Cl. 75-256.000.
Green, Joseph, to H. J. Heinz Company Limited. Production of mushroom spawn. 4,063,383, Cl. 47-1.100.
Greer, Donald J.; and Olds, John R., to Esco Corporation. Mechanism to restrain slamming of shovel dipper doors. 4,063,373, Cl. 37-115.000.
Grefco, Inc.: *See—*
Stewart, Sherman A.; Snyder, Estel R.; and Ruff, David L., 4,063,395, Cl. 52-309.500.
Gregory, Gordon Ian: *See—*
Cook, Martin Christopher; Gregory, Gordon Ian; and Bradshaw, Janice, 4,064,346, Cl. 544-30.000.
Grehier, Alain, to Institut Francais du Petrole. Fuel cell with electrodes separated by intermediate elements. 4,064,321, Cl. 429-34.000.
Greinacher, Ekkehard; Reinhardt, Klaus; and Strnat, Karl, to Th. Goldschmidt AG. Method of increasing the coercive force of pulverized rare earth-cobalt alloys. 4,063,971, Cl. 148-105.000.
Grellier, Rene, to Rhone-Poulenc-Textile. Textile yarn carrier. 4,063,688, Cl. 242-18.0DD.
Grenness, Morten, to Chloride Group Limited. Electric storage batteries. 4,064,325, Cl. 429-104.000.
Gribova, Irina Alexandrovna: *See—*
Korshak, Vasily Vladimirovich; Gribova, Irina Alexandrovna; Krasnov, Alexandr Petrovich; Teplyakov, Mikhail Mikhailovich; Elerdashvili, Georgy Vasilievich; Gureeva, Galina Ilinichna; Chebotarev, Valery Panteleimonovich; Dvorikova, Raisa Alexeevna; Sergeev, Vladimir Alexandrovich; and Kakauridze, Dali Mitrofanovna, 4,064,097, Cl. 260-37.00R.
Griffiths, Brian John: *See—*
Chandra, Grish; and Griffiths, Brian John, 4,064,154, Cl. 260-448.20E.
Griggs, Elmer L. Air gauge for nozzle assemblies. 4,063,449, Cl. 73-37.500.
Grigoraschenko, Vladimir Alexandrovich: *See—*
Gurkov, Konstantin Stepanovich; Nazarov, Nikolai Grigorievich; Cherednikov, Evgeny Nikolaevich; Plavskikh, Vladimir Dmitrievich; Rozhkov, Leonid Georgievich; Tkach, Khaim Berkovich; Grigoraschenko, Vladimir Alexandrovich; Kostylev, Alexandr Dmitrievich; Davydov, Vasily Georgievich; and Zuev, Valentin Alexeevich, 4,063,423, Cl. 61-53.620.
Grim, John S. No stress dip net. 4,063,380, Cl. 43-11.000.
Grimsby, Emerson A.: *See—*
Borsuk, Leslie M.; Anderson, Randall H.; Grimsby, Emerson A.; and Malsberger, Robert F., 4,063,351, Cl. 29-629.000.
Groby, Chester, to Aktiebolaget Tudor. Process for welding together a cover and a vessel of thermoplastic material, and cover intended for use in the process. 4,063,977, Cl. 156-69.000.
Gross, Stanley Joseph, to Biological Developments, Inc. Antigens and immunoassays for morphine and related 3-oxybenzomorphan compounds. 4,064,228, Cl. 424-1.000.
Grossman, Stephen Richard, to Scott Paper Company. Fibrous webs

with improved bonder and creping adhesive. 4,063,995, Cl. 162-112.000.
Grosso, Vincent Gerard: *See—*
Stretanski, Joseph Anthony; and Grosso, Vincent Gerard, 4,064,106, Cl. 260-45.95C.
Grove, Clark Richard, to United States of America, Air Force. Meter box assembly. 4,064,456, Cl. 324-115.000.
Grubb, Robert G., to Allis-Chalmers Corporation. Method of fabricating a crown plate for Francis-type hydraulic turbine runner. 4,063,675, Cl. 228-178.000.
Gruettner, Henry. Solar heater. 4,063,547, Cl. 126-271.000.
Grumman Aerospace Corporation: *See—*
Hoffman, Kenneth G.; Maller, Robert R.; and Messler, Robert W., Jr., 4,063,644, Cl. 209-111.600.
Grunner, Erich: *See—*
Schmidt, Oskar; Grunner, Erich; Tompich, Horst; Lenk, Gerhard; and Drum, Adam, 4,063,861, Cl. 425-542.000.
Grupe, Robert C., Jr.: *See—*
Balinski, Henry A.; and Grupe, Robert C., Jr., 4,063,391, Cl. 52-1.000.
Gryaznov, Vladimir Mikhailovich: *See—*
Smirnov, Viktor Sergeevich; Gryaznov, Vladimir Mikhailovich; Lebedeva, Valentina Ivanovna; Mischenko, Alexandr Petrovich; Polyakova, Victoria Petrovna; and Savitsky, Evgeny Mikhailovich, 4,064,188, Cl. 260-672.00R.
Grytcko, Carl E., to I-T-E Imperial Corporation. Interchangeable solid state and thermal-magnetic trip units. 4,064,469, Cl. 335-6.000.
Gsell, Laurenz: *See—*
Farooq, Saleem; Drabek, Jozef; Gsell, Laurenz; Karrer, Friedrich; and Meyer, Willy, 4,064,263, Cl. 424-285.000.
GTE Automatic Electric Laboratories Incorporated: *See—*
Macrander, Max S., 4,064,449, Cl. 323-48.000.
GTE Sylvania Incorporated: *See—*
Dziedzic, Chester J., 4,063,856, Cl. 425-5.000.
Fritsch, Carl William, Jr.; and Wolfe, Robert Wade, 4,063,955, Cl. 106-39.600.
Johnson, Alfred D., 4,064,412, Cl. 313-318.000.
Gueremy, Claude Georges Alexandre: *See—*
Champseix, Alain Andre; Gueremy, Claude Georges Alexandre; and Le Fur, Gerard Roger, 4,064,255, Cl. 424-267.000.
Guilden, Paul: *See—*
Von Kemenczky, Miklos, 4,063,671, Cl. 226-76.000.
Gulf & Western Manufacturing Company: *See—*
MacKay, John A.; and Gilkey, George M., 4,064,382, Cl. 200-19.00R.
Gundlach, Robert W., to Xerox Corporation. Portable camera. 4,064,514, Cl. 354-3.000.
Gunewardena, Shelly J.; Glick, Leslie P.; and Sakihara, Yoshinobu F., to Vanguard Electronics Company, Inc. Compact inductor. 4,064,472, Cl. 336-65.000.
Gunter, Daniel Lee: *See—*
Gannon, Marc Jay; and Gunter, Daniel Lee, 4,063,805, Cl. 351-6.000.
Gunther, Ronald G., to Yardney Electric Corporation. Heat treatment of NiO_x utilized in pressed nickel electrodes. 4,063,576, Cl. 141-1.100.
Gureeva, Galina Ilinichna: *See—*
Korshak, Vasily Vladimirovich; Gribova, Irina Alexandrovna; Krasnov, Alexandr Petrovich; Teplyakov, Mikhail Mikhailovich; Elerdashvili, Georgy Vasilievich; Gureeva, Galina Ilinichna; Chebotarev, Valery Panteleimonovich; Dvorikova, Raisa Alexeevna; Sergeev, Vladimir Alexandrovich; and Kakauridze, Dali Mitrofanovna, 4,064,097, Cl. 260-37.00R.
Gurkov, Konstantin Stepanovich; Nazarov, Nikolai Grigorievich; Cherednikov, Evgeny Nikolaevich; Plavskikh, Vladimir Dmitrievich; Rozhkov, Leonid Georgievich; Tkach, Khaim Berkovich; Grigoraschenko, Vladimir Alexandrovich; Kostylev, Alexandr Dmitrievich; Davydov, Vasily Georgievich; and Zuev, Valentin Alexeevich. Method of making built-in-place reinforced concrete piles. 4,063,423, Cl. 61-53.620.
Guschin, Sergei Grigorievich: *See—*
Goltsov, Viktor Alexeevich; Timofeev, Nikolai Ivanovich; and Guschin, Sergei Grigorievich, 4,063,937, Cl. 75-172.00G.
Guthrie, Dale H., to RPC Corporation. Cargo container spreader with guide apparatus. 4,063,770, Cl. 294-81.0SF.
Gutierrez, Ernest F. Safety ladder with caster assembly moveable positively to a retracted position. 4,063,616, Cl. 182-17.000.
Guzowski, Kenneth A.: *See—*
Blumenberg, Horst H.; and Guzowski, Kenneth A., 4,063,340, Cl. 29-25.160.
Gygli, Walter: *See—*
Haenni, Eduard A.; Zbornik, Vaclav; and Gygli, Walter, 4,063,445, Cl. 72-465.000.
H&H Industries, Inc.: *See—*
McEvers, Dale L.; and Struble, Daniel P., 4,063,493, Cl. 93-58.20R.
H. J. Heinz Company Limited: *See—*
Green, Joseph, 4,063,383, Cl. 47-1.100.
H. K. Porter Company, Inc.: *See—*
Yarbrough, Garrett, 4,063,443, Cl. 72-391.000.
H. W. Stark Co., Inc.: *See—*
Lesek, Arthur, 4,063,492, Cl. 93-49.00R.
Haas, Werner E. L.; and Dir, Gary A., to Xerox Corporation. Magnetic field detector. 4,064,453, Cl. 324-214.000.
Hadfield, Harry J., to United States of America, Army. Grenade fuze. 4,063,514, Cl. 102-79.000.
Hadi, Homayoun: *See—*
Burr, John F.; and Hadi, Homayoun, 4,064,498, Cl. 340-237.00R.
Haemmerle AG Maschinenfabrik: *See—*
Haenni, Eduard A.; Zbornik, Vaclav; and Gygli, Walter, 4,063,445, Cl. 72-465.000.
Haenni, Eduard A.; Zbornik, Vaclav; and Gygli, Walter, to Haemmerle AG Maschinenfabrik. Bending press. 4,063,445, Cl. 72-465.000.
Hagemeister, Klaus: *See—*
Hueber, Alfred; and Hagemeister, Klaus, 4,063,850, Cl. 415-214.000.
Haggard, Richard A.: *See—*
Lewis, Sheldon N.; and Haggard, Richard A., 4,064,161, Cl. 526-320.000.
Hagios, Frederick K. Belt apparatus for covering belt loops. 4,063,313, Cl. 2-338.000.
Hagiwara, Yoshiaki; and Yamazaki, Hiroshi, to Sony Corporation. Two-phase charge transfer device image sensor. 4,064,524, Cl. 357-24.000.
Hahn, Ernest A., to PPG Industries, Inc. Radiation curable compositions containing organosilicon compounds. 4,064,286, Cl. 427-44.000.
Halada, Jumei; Akiyoshi, Hiromi; and Matsunaga, Tsutomu, to Bridgestone Tire Company Limited. Method of manufacturing pneumatic tubular tires. 4,064,215, Cl. 264-236.000.
Halada, Karl Rudolf, to Oehler, Wyhlen, Lagertechnic AG. Automatic high shelf store. 4,063,653, Cl. 214-16.40A.
Hall, Floyd Vanmeda, to Liggett Group Inc. Apparatus for making filter rods for cigarettes. 4,063,494, Cl. 93-77.0FT.
Hall, Floyd Vanmeda, to Liggett Group Inc. Vacuum plug feed machine. 4,063,633, Cl. 198-455.000.
Hall, James A. Arm wrestling exercise device. 4,063,727, Cl. 272-136.000.
Hall, John B.; Sprecker, Mark A.; Schmitt, Frederick Louis; and Vock, Manfred Hugo, to International Flavors & Fragrances Inc. Flavoring with 1-acetyl-3,3-dimethyl-(2-propenyl)cyclohexane. 4,064,281, Cl. 426-538.000.
Hall, Richard A., to Willamette Industries, Inc. Box construction. 4,063,678, Cl. 229-39.00R.
Halle, Gary L.; and Van Lith, Albert, to Halle, Gary L. Apparatus for producing shaped concrete products. 4,063,859, Cl. 425-139.000.
Halliburton Company: *See—*
Carney, Leroy L., 4,064,055, Cl. 252-8.50C.
Jessup, Robert L., 4,063,593, Cl. 166-317.000.
Hallstrom, Curtis H.; Glass, Brian E.; Touba, Ali R.; and Daravingas, George V., to General Mills, Inc. Starch sponge products and the process of preparing same. 4,064,282, Cl. 426-559.000.
Halpaap, Herbert; Reich, Walter; and Ripphahn, Johannes, to Merck Patent Gesellschaft mit beschraenkter Haftung. Separating material for thin layer chromatography. 4,064,041, Cl. 210-31.00C.
Hamada, Toshimitsu: *See—*
Mese, Michihiro; Miyatake, Takafumi; Kashioka, Seiji; and Hamada, Toshimitsu, 4,064,484, Cl. 340-146.3AG.
Hamano, Sachiyuki; Kanazawa, Tamotsu; and Kitamura, Shin-ichi, to Eisai Co., Ltd. Bis-(meta-amidinophenoxy)-compounds and pharmacologically acceptable acid addition salts thereof. 4,064,169, Cl. 260-564.00R.
Hamill, Robert L.; Stark, William M.; and DeLong, Donald C., to Eli Lilly and Company. Antibiotic A-4696. 4,064,233, Cl. 424-118.000.
Hamm, Earl L. Glass and mirror making process. 4,063,917, Cl. 65-30.00R.
Hamm, Philip C.: *See—*
Gaertner, Van R.; and Hamm, Philip C., 4,063,922, Cl. 71-86.000.
Hammann, Ingeborg: *See—*
Sirrenberg, Wilhelm; Schramm, Jurgen; Klauke, Erich; Hammann, Ingeborg; and Stendel, Wihelm, 4,064,267, Cl. 424-304.000.
Hammen, Philip D.; and Milne, George M., Jr., to Pfizer Inc. 2-Aminomethyleneindanone analgesic agents. 4,064,272, Cl. 424-330.000.
Han, Jerry C-Y, to Du Pont de Nemours, E. I., and Company. Carbamoylphosphonic acid brush control agents. 4,063,923, Cl. 71-86.000.
Haneda, Kazuo: *See—*
Odate, Ryoji; and Haneda, Kazuo, 4,064,099, Cl. 260-42.180.
Hanks, George L. Convertible station wagon roof. 4,063,774, Cl. 296-137.00E.
Hanning-Elektro-Werke Robert Hanning: *See—*
Hanning, Michael, 4,064,208, Cl. 264-39.000.
Hanning, Michael, to Hanning-Elektro-Werke Robert Hanning. Molding method with automatic fluid treatment of mold cavity. 4,064,208, Cl. 264-39.000.
Hansen, Frode Johan. Three column tower. 4,063,426, Cl. 61-94.000.
Hansen Mfg. Co. of Florida, Inc.: *See—*
Hansen, Ray W.; and Pouchert, Walter P., 4,064,427, Cl. 362-96.000.
Hansen, Odd, to Plast & Form A/S. Sledge. 4,063,746, Cl. 280-16.000.
Hansen, Ray W.; and Pouchert, Walter P., to Hansen Mfg. Co. of Florida, Inc., a part interest. Safety guard and light fixture attachment for ceiling fans. 4,064,427, Cl. 362-96.000.
Hanson, William Michael; and Price, Basil Robert, to Automotive Products Limited. Ball joint assembly. 4,063,834, Cl. 403-138.000.
Hansson, Gunnar Christer, to Atlas Copco Aktiebolag. Improved screw or nut runner. 4,063,625, Cl. 192-17.00R.
Hantke, Helmut, to Apex Pattern Company. Apparatus and method for cutting carpet. 4,063,477, Cl. 83-40.000.
Hapgood, William H., to Raytheon Company. Solar collector thermostat. 4,063,545, Cl. 126-271.000.
Hardin, John Kelly, to Raymond Lee Organization, Inc., The. Water hose holder tongs. 4,063,767, Cl. 294-16.000.

Hardy, William Baptist: *See—*
Hillard, Ray Leonard; and Hardy, William Baptist, 4,064,102, Cl. 260-45.80N.
Harlow, Robert James, to Loewy Robertson Engineering Company Limited. Roll gap measurement. 4,063,363, Cl. 33-182.000.
Harmon Colors Corporation: *See—*
Gerson, Herman; Santimauro, John Francis; and Lerner, Lawrence Robert, 4,064,129, Cl. 260-279.0QA.
Harney, Donald William Gerald: *See—*
Birchall, George Richard; Harney, Donald William Gerald; and Forsyth, Bruce Adam, 4,064,266, Cl. 424-304.000.
Harris, Harry Wayne; Schaeffer, James Robert; and Snoke, Roy Eugene, to Eastman Kodak Company. Purification of uricase. 4,064,010, Cl. 195-62.000.
Harris, James A.: *See—*
Mares, Trinidad; Arthur, Jett C., Jr.; and Harris, James A., 4,063,885, Cl. 8-115.700.
Harris, William D.: *See—*
Best, Robert H.; and Harris, William D., 4,064,548, Cl. 361-229.000.
Harrison, Jonas P., to Chevron Research Company. Catalyst for producing maleic anhydride. 4,064,070, Cl. 252-435.000.
Harriz, John M.: *See—*
Lazorisak, Nicholas W.; Christiansen, Fredric A.; and Harriz, John M., 4,064,213, Cl. 264-134.000.
Hart, Mary Louise. Visual communication tool for children. 4,063,369, Cl. 35-35.00E.
Harting, Louis L.; and Kozlow, Michael R., to Carborundum Company, The. Thermal insulation assembly. 4,063,573, Cl. 138-155.000.
Hartley, David: *See—*
Tomlin, Clive Dudley Spencer; Slater, John Walter; and Hartley, David, 4,063,926, Cl. 71-94.000.
Hartman, George J.; and Darland, Michael G. Process for recovering aluminum from alunite ore. 4,064,217, Cl. 423-120.000.
Hartmann & Braun Aktiengesellschaft: *See—*
Becker, Wolf-Jurgen; and Ruse, Alois, 4,063,891, Cl. 23-230.0PC.
Harty, Austin Thomas, deceased: *See—*
Coonce, Homer Eugene; Synnott, Judson Bruce, III; and Harty, Austin Thomas, deceased, 4,064,370, Cl. 179-15.0BA.
Harty, Veronica M., administrator: *See—*
Coonce, Homer Eugene; Synnott, Judson Bruce, III; and Harty, Austin Thomas, deceased, 4,064,370, Cl. 179-15.0BA.
Hase, Takashi: *See—*
Toshinai, Akio; and Hase, Takashi, 4,064,066, Cl. 252-301.60R.
Haseltine, Marcus W., Jr., to Sun Oil Company of Pennsylvania. Preparation of isopropylnaphthalene mixture. 4,064,068, Cl. 252-364.000.
Hashimoto, Akihiko: *See—*
Maitani, Yoshihisa; Shimoyama, Kunio; Yoshida, Muneaki; Hashimoto, Akihiko; and Kitagawa, Masahiro, 4,064,517, Cl. 354-51.000.
Hashimoto, Hikotaka: *See—*
Yokotsuka, Tamotsu; Asao, Yasuo; Matsuura, Masaru; and Hashimoto, Hikotaka, 4,064,277, Cl. 426-331.000.
Hasten, Jimmie L.: *See—*
Beck, Henry E.; Hasten, Jimmie L.; and Sindelar, Ernest C., 4,063,624, Cl. 192-4.00A.
Hauni-Werke Korber & Co., KG: *See—*
Hinzmann, Alfred, 4,063,480, Cl. 83-176.000.
Lorenzen, Heinz-Christen, 4,063,563, Cl. 131-21.00D.
Hauser, Raimund: *See—*
Freudenschuss, Otto; Keznickl, Eduard; and Scheiber, Robert, 4,064,520, Cl. 354-196.000.
Havey, Ambrose S., III. Multi-element casket. 4,063,337, Cl. 27-2.000.
Hay, Allan S., to General Electric Company. Process for the preparation of an organomercaptophenol from sulfur, a 2,6-disubstituted phenol, and an activated olefin or an epoxy compound. 4,064,158, Cl. 260-465.00F.
Hay, Allan S., to General Electric Company. Organomercaptophenol. 4,064,179, Cl. 260-609.00F.
Hayashi, Shizuo: *See—*
Asakawa, Toshiro; Ishida, Atsuo; and Hayashi, Shizuo, 4,064,231, Cl. 424-52.000.
Hayden, Rodney, to TRW Inc. Obturator structure for silent automotive relay. 4,064,470, Cl. 335-196.000.
Hayes, Cecil L., to United States of America, Air Force. High energy laser pointing and tracking system utilizing beam angle/focus dither method of operation. 4,063,819, Cl. 356-152.000.
Hayes, Thomas H.; and Beres, Steve W., to VCA Corporation. Spray pump assembly. 4,063,854, Cl. 417-552.000.
Hazama, Kenichi; Hirose, Isamu; Yasue, Kenji; and Shinoura, Daisuke, to Unitika Ltd. Flame-retardant resin compositions. 4,064,196, Cl. 260-860.000.
Hazelton, Henry S., Jr.: *See—*
Schrempp, Ernst; and Hazelton, Henry S., Jr., 4,063,809, Cl. 355-3.0DR.
Heaney, Donald F.; and Boal, Delbert L., to Dravo Corporation. Filter bottom. 4,064,050, Cl. 210-293.000.
Hechenbleikner, Ingenuin, to Weston Chemical Co., Inc. Friable distearyl pentaerythritol diphosphite. 4,064,100, Cl. 260-45.80R.
Heckel, Rene, to Maschinenfabrik Schweiter AG. Supply bin and feeder system combination for textile cops or pirns. 4,063,635, Cl. 198-531.000.
Hedaya, Eddie; and Spyros, Theodoropulos, to United Carbide Corporation. Halosilyl carbamates. 4,064,151, Cl. 260-448.20N.
Hedger, John Henry. Servo tracking apparatus. 4,063,543, Cl. 126-270.000.
Hedges, Michael J.: *See—*
Smith, Colin F. G.; Oldham, Ronald C.; Hedges, Michael J.; New, Alan J.; and Pearson, William, 4,064,358, Cl. 174-70.00S.
Heibel, Helmut, to Girling Limited. Hydraulic brake actuator. 4,063,621, Cl. 188-72.600.
Hein, Lehmann Akt.: *See—*
Wehner, Albert, 4,064,051, Cl. 210-389.000.
Hein, Richard D.: *See—*
Fordyce, Gary L.; Hein, Richard D.; Sandels, Fred V.; and Britton, James E., 4,063,840, Cl. 404-69.000.
Heinrich, Walter: *See—*
Dixon, Herbert; Heinrich, Walter; and Morris, Gilbert, 4,064,357, Cl. 174-68.500.
Heinsohn, Howard H., Jr.: *See—*
Evers, William J.; Heinsohn, Howard H., Jr.; and Vock, Manfred Hugo, 4,064,280, Cl. 426-535.000.
Heinsohn Jr., Howard H.: *See—*
Evers, William J.; Heinsohn Jr., Howard H.; and Vock, Manfred Hugo, 4,064,278, Cl. 426-535.000.
Heinz, Henry, Jr., to Union Carbide Corporation. Method of making a galvanic cell having a resealable vent closure. 4,063,902, Cl. 29-623.200.
Heinze, Helmut: *See—*
Rothe, Hans Joachim; Heinze, Helmut; Whitehead, Brian D.; and Priepke, Gunther, 4,064,112, Cl. 260-75.00M.
Hellstern, Heidrun: *See—*
von Lauff, Hans Peter; Fabian, Wolfgang; and Hellstern, Heidrun, 4,063,957, Cl. 106-304.000.
Hellwarth, Robert W.; and Christensen, C. Paul, Jr., to University of Southern California, The. Optical harmonic microscope assembly and examination method. 4,063,804, Cl. 350-320.000.
Hematech Inc.: *See—*
Wong, Jeffrey Tze-Fei, 4,064,118, Cl. 260-112.50R.
Henke, Heinz W. Fourdrinier fabric having contacting longitudinal threads. 4,063,998, Cl. 162-348.000.
Henkel Kommanditgesellschaft auf Aktien: *See—*
Alder, Wilfried; Huppertz, Josef; Latka, Herbert; and Sperling, Gerhard, 4,064,063, Cl. 252-135.000.
Blum, Helmut; and Worms, Karl-Heinz, 4,064,164, Cl. 260-502.500.
Henry, James M., to Magi-Cloth, Inc. Cleaning cloth composition. 4,064,061, Cl. 252-91.000.
Henry, James W., to Potlatch Corporation. Carton with triangular sides. 4,063,679, Cl. 229-41.00C.
Henschel, Leonard, to Mobil Oil Corporation. Asphaltic composition and its manufacture. 4,064,082, Cl. 260-27.0EV.
Hentschel, Volkmar: *See—*
Dietzel, Walter; Matusch, Siegfried; and Hentschel, Volkmar, 4,063,959, Cl. 127-19.000.
Hepworth, Paul Steabben, to Plas Plugs Limited. Hand knife. 4,063,356, Cl. 30-162.000.
Hercules Incorporated: *See—*
Walker, John F., 4,064,058, Cl. 252-56.00S.
Hergenrother, Rudolf C. Visual glide path beacon system. 4,064,424, Cl. 362-231.000.
Herkenrath, Erik, to Lonza, Ltd. Process for the production of 1,2-dihydro-2-oxo-4-methyl-7-acetoacetic acid amido-quinoline. 4,064,131, Cl. 260-287.00K.
Herriau, Jean Pierre: *See—*
Huignard, Jean Pierre; Herriau, Jean Pierre; and Micheron, Francois, 4,063,795, Cl. 350-3.500.
Hesse, Robert H.: *See—*
Barton, Derek H. R.; and Hesse, Robert H., 4,064,148, Cl. 260-397.450.
Hewlett-Packard Company: *See—*
Dias, J. Fleming; Karrer, Henry E.; and Tykulsky, Alexander, 4,064,550, Cl. 361-283.000.
Hibbs, Louis E., Jr.: *See—*
Lee, Minyoung; Szala, Lawrence E.; and Hibbs, Louis E., Jr., 4,063,907, Cl. 51-295.000.
Hickerson, Robert J.: *See—*
Scott, Irvin C.; Settle, Evan E., III; and Hickerson, Robert J., 4,063,732, Cl. 273-72.00A.
Hicks, Paul E., Jr., to ACF Industries, Incorporated. Vibrator bracket assembly for hoppers and railway cars. 4,063,657, Cl. 214-152.000.
Higgins, David M. Bagging machine. 4,063,401, Cl. 53-183.000.
Higgins, James Francis, to Du Pont de Nemours, E. I., and Company. Heat stable monoclinic bismuth vanadate pigment. 4,063,956, Cl. 106-288.00B.
Hijikata, Sotaro: *See—*
Iwasaki, Kenji; Sawa, Tsuna; and Hijikata, Sotaro, 4,064,411, Cl. 313-32.000.
Hildebrand, Alfred P.; Morrow, Howard E.; and Jones, Henry W., to Spectra-Physics, Inc. Method and apparatus for reading coded labels. 4,064,390, Cl. 235-470.000.
Hill, Terrance E.; and Riley, George R., to United States of America, Army. Field test assembly for measuring compressive loads. 4,063,454, Cl. 73-141.00A.
Hillard, Ray Leonard; and Hardy, William Baptist, to American Cyanamid Company. Light and heat stabilizers for polyolefins. 4,064,102, Cl. 260-45.80N.
Hilmoe, Larry James. Centrifugal casting machine having vacuum assist. 4,063,863, Cl. 425-425.000.
Hiltebrandt, Siegfried, to Richard Wolf GmbH. Optical device for an endoscope with bellows expansion compensation means. 4,063,796, Cl. 350-70.000.

Hilti Aktiengesellschaft: *See—*
Jochum, Peter, 4,063,672, Cl. 227-10.000.
Hilton, Glenn B.: *See—*
Dalton, William O.; and Hilton, Glenn B., 4,064,093, Cl. 260-29.7PT.
Himmelmann, Wolfgang; Sobek, Johannes; and Sauerteig, Wolfgang, to AGFA-Gevaert Aktiengesellschaft. Process for hardening silver halide containing photographic layers with sulpho- or sulphoalkyl-substituted carbamoyl pyridinium compounds. 4,063,952, Cl. 96-111.000.
Himmler, Gunther, to Gebr. Hofmann KG. Apparatus for the determination of the static unbalance of a test body. 4,063,462, Cl. 73-483.000.
Hinzmann, Alfred, to Hauni-Werke Korber & Co., KG. Apparatus for severing rod-shaped smokers' products. 4,063,480, Cl. 83-176.000.
Hirai, Koichi; Iwano, Yuji; Saito, Tokio; Hiraoka, Tetsuo; Kishida, Yukichi; and Nishimura, Takuzo, to Sankyo Company Limited. Penicillin and cephalosporin derivatives and process for preparing the same. 4,064,137, Cl. 260-306.70C.
Hiraoka, Tetsuo: *See—*
Hirai, Koichi; Iwano, Yuji; Saito, Tokio; Hiraoka, Tetsuo; Kishida, Yukichi; and Nishimura, Takuzo, 4,064,137, Cl. 260-306.70C.
Hirose, Isamu: *See—*
Hazama, Kenichi; Hirose, Isamu; Yasue, Kenji; and Shinoura, Daisuke, 4,064,196, Cl. 260-860.000.
Hirose, Tatsuzo: *See—*
Sata, Naoyasu; Imaichi, Kensaku; and Hirose, Tatsuzo, 4,063,414, Cl. 60-39.050.
Hirose, Yusuke; Ida, Fumihiro; and Ito, Takehiko, to Nisshin Steel Co., Ltd. Method for measuring the degree of alloying of galvannealed steel sheets. 4,064,437, Cl. 250-273.000.
Hirota, Akira: *See—*
Ota, Yoshihiko; and Hirota, Akira, 4,064,537, Cl. 358-127.000.
Hirota, Eiichi: *See—*
Kawamata, Takashi; Inoue, Tsuneo; and Hirota, Eiichi, 4,064,224, Cl. 423-598.000.
Hitachi Chemical Company, Ltd.: *See—*
Masuda, Shunji; Oyama, Yoshinori; Tanaka, Hisao; Uchigasaki, Isao; and Sasaki, Takehisa, 4,064,111, Cl. 260-75.00M.
Hitachi, Ltd.: *See—*
Mese, Michihiro; Miyatake, Takafumi; Kashioka, Seiji; and Hamada, Toshimitsu, 4,064,484, Cl. 340-146.3AG.
Yokoyama, Takashi; Miyadera, Yasuo; Shito, Nobuhiko; Suzuki, Hiroshi; and Wakashima, Yoshiaki, 4,064,289, Cl. 427-82.000.
Hoang, Don-Tri, to Societe Francaise d'Equipments pour la Navigation Aerienne. Method and self-adapting damper system having energy balance. 4,064,444, Cl. 318-561.000.
Hodes, Gary: *See—*
Manassen, Joost; Hodes, Gary; and Cahen, David Ferdinand, 4,064,326, Cl. 429-111.000.
Hodge, Gerald J. Guard for a chain saw used for carving. 4,063,358, Cl. 30-371.000.
Hoechst Aktiengesellschaft: *See—*
Hupfl, Johann; Czermak, Manfred; Teichmann, Helmut; and Paul, Josef, 4,063,883, Cl. 8-116.00P.
Lind, Erwin, 4,063,948, Cl. 96-1.600.
Papenfuhs, Theodor; and Volk, Heinrich, 4,064,349, Cl. 560-56.000.
Rieger, Klaus; Stetter, Karl-Heinz; and Wildgruber, Josef, 4,064,149, Cl. 260-406.000.
Uhlig, Fritz; and Gramm, Ine, 4,063,949, Cl. 96-27.00E.
Hoechst, Lonnie D.: *See—*
Bauer, James J.; and Hoechst, Lonnie D., 4,063,832, Cl. 403-54.000.
Hoehn, Steven Jon, to Litton Business Telephone Systems, Inc. Apparatus for a key telephone system for enabling intercom substations to access trunk lines. 4,064,371, Cl. 179-18.0FF.
Hoehr, Lothar: *See—*
Zeitler, Gerhard; Hoehr, Lothar; and Mueller-Tamm, Heinz, 4,064,198, Cl. 260-878.00R.
Hoffman, Erwin E., to Lynes, Inc. Seal arrangement and flow control means therefor. 4,063,427, Cl. 61-100.000.
Hoffman, Erwin E.: *See—*
Coone, Malcolm G.; and Hoffman, Erwin E., 4,063,421, Cl. 61-102.000.
Hoffman, Kenneth G.; Maller, Robert R.; and Messler, Robert W., Jr., to Grumman Aerospace Corporation. Process for nondestructive inspection. 4,063,644, Cl. 209-111.600.
Hoffmann-La Roche, Inc.: *See—*
Cassal, Jean-Marie; Furst, Andor; and Meier, Werner, 4,064,173, Cl. 260-586.00E.
Hoium, Richard B.: *See—*
O'Neal, Leo; Stark, Wayne H.; and Hoium, Richard B., 4,063,331, Cl. 17-45.000.
Holden, Homer N.: *See—*
Kleykamp, Donald L.; Neroni, Peter J.; Grabovez, Victor M.; and Holden, Homer N., 4,063,790, Cl. 339-16.00R.
Hollandsche Beton Groep N.V.: *See—*
Jansz, Joost W., 4,063,599, Cl. 173-1.000.
Hollaway, William D. Portable pitching mound. 4,063,729, Cl. 273-25.000.
Holman, Harry A., Jr.: *See—*
O'Brien, John R.; Holman, Harry A., Jr.; and Kallmeyer, Albert W., 4,063,684, Cl. 239-265.110.
Holzwarth, Dietmar: *See—*
Rieger, Hansjorg, Dr.; Kess, Leo; and Holzwarth, Dietmar, 4,063,583, Cl. 152-241.000.
Homer, Joseph F., to Exxon Production Research Company. Equipment handling system. 4,063,650, Cl. 214-1.0BB.
Hon, Wai-Leung; and Patterson, Henry B., Jr., to Texas Instruments Incorporated. Method and apparatus for detection of waveform peaks and slopes. 4,064,408, Cl. 307-351.000.
Honda Giken Kogyo Kabushiki Kaisha: *See—*
Sanka, Tsugio; and Shishido, Toshimasa, 4,064,201, Cl. 261-34.00A.
Honda, Keisuke. Flasher display type fish finder. 4,064,478, Cl. 340-3.00C.
Honeywell, Inc.: *See—*
Mathison, Leslie C., 4,063,447, Cl. 73-27.00R.
Honeywell Information Systems Inc.: *See—*
Passler, Herbert Edwin; and Fredenberg, James David, 4,063,349, Cl. 29-627.000.
Honig, Gunter: *See—*
Gorille, Ingo; Borst, Wolfgang; Klotzner, Winfried; Ott, Karl; Moller, Heinz; Honig, Gunter; Kiencke, Uwe; Zechnall, Martin; Flaig, Ulrich; Schulz, Alfred; and Pagel, Ernst-Olav, 4,063,539, Cl. 123-117.00D.
Hooker Chemicals & Plastics Corporation: *See—*
Miller, George T., 4,063,884, Cl. 8-115.500.
Hopkins, Evan Leon; Hopkins, Evan Lloyd; and Wedel, Jerry L. Orientation detection and alignment method and apparatus. 4,063,365, Cl. 33-288.000.
Hopkins, Evan Lloyd; and Wedel, Jerry Leslie, to Hopkins Manufacturing Corporation. Fluid condition monitoring system. 4,064,455, Cl. 324-61.00R.
Hopkins, Evan Lloyd: *See—*
Hopkins, Evan Leon; Hopkins, Evan Lloyd; and Wedel, Jerry L., 4,063,365, Cl. 33-288.000.
Hopkins Manufacturing Corporation: *See—*
Hopkins, Evan Lloyd; and Wedel, Jerry Leslie, 4,064,455, Cl. 324-61.00R.
Horgan, Stephen W.: *See—*
Fleming, Robert W.; Sill, Arthur D.; Albrecht, William L.; and Horgan, Stephen W., 4,064,347, Cl. 544-79.000.
Hori, Michimasa: *See—*
Yuda, Jiro; Morokoshi, Hiroshi; Hori, Michimasa; Ikoma, Mitsuhiro; and Aizawa, Takeshi, 4,064,420, Cl. 318-224.00A.
Horiuchi, Kei, to Toshin Seiki Kabushiki Kaisha. Clothing presser. 4,063,376, Cl. 38-41.000.
Horna, Otakar Anthony, to Communications Satellite Corporation. Logarithmic echo canceller. 4,064,379, Cl. 179-170.200.
Horton, Robert A.; and Yaichner, Ella M., to Precision Metalsmiths, Inc. Pattern material composition. 4,064,083, Cl. 260-28.50R.
Hosack, Harold H., to Fairchild Camera and Instrument Corporation. Edge etch method for producing narrow openings to the surface of materials. 4,063,992, Cl. 156-653.000.
Howard, Alan N., to Bristol-Myers Company. Methods and pharmaceutical preparation for the treatment of hypercholesterolemia. 4,064,234, Cl. 424-157.000.
Howard, John H., to Day Star Foam Company. Floral base. 4,064,301, Cl. 428-151.000.
Howard, Lawrence F.; and Mills, James W. Method for cleaning carpet. 4,063,961, Cl. 134-4.000.
Howell, James Damron; Beck, Robert William; Bruce, George Hayden; and McLain, John David, to Exxon Production Research Company. Drilling fluid diverter system. 4,063,602, Cl. 175-7.000.
Howell, John K., Jr., to Oxy Metal Industries Corporation. Treating aluminum with tannin and lithium. 4,063,969, Cl. 148-6.270.
Howlett, Donald L., to Texaco Inc. Means and method for recording seismic signals. 4,064,480, Cl. 340-15.5GC.
Hruza, Anne: *See—*
Withycombe, Donald Arthur; Hruza, Anne; Vock, Manfred Hugo; Giacino, Christopher; Mookherjee, Braja Dulal; Pittet, Alan Owen; and Schreiber, William L., 4,064,279, Cl. 426-535.000.
Hubbard, Mont: *See—*
Powell, John David; Hubbard, Mont; and Clappier, Robert R., 4,063,538, Cl. 123-117.00R.
Hubbard, Robert William; and Davis, Timothy John Archer, to Pye Limited. Calibration of crane load indicating arrangement. 4,063,649, Cl. 212-39.00R.
Hubele, Adolf; and Kuhne, Manfred, to Ciba-Geigy Corporation. Method for the cultivation of plants employing α-cyano-α-hydroxyimino-acetamide derivatives. 4,063,921, Cl. 71-76.000.
Hudda, Frank G.: *See—*
Farrall, George A.; Gilhooley, William A.; and Hudda, Frank G., 4,063,991, Cl. 156-645.000.
Hueber, Alfred; and Hagemeister, Klaus, to Motoren- und Turbinen-Union Munchen GmbH. Gas turbine engine having a ceramic turbine wheel. 4,063,850, Cl. 415-214.000.
Huff, Roger K.; Gallay, Jean Jacques; and Kuhne, Manfred, to Ciba-Geigy Corporation. Heterocyclic-substituted 1,3,5-oxadiazin-2-one compounds useful for combatting coccidiosis. 4,064,243, Cl. 424-248.500.
Huffman, Harold W. Multi-panel envelope form and method of producing same. 4,063,398, Cl. 53-31.000.
Hughes Aircraft Company: *See—*
Fraas, Lewis M., 4,063,974, Cl. 148-175.000.
Myer, Jon H., 4,064,496, Cl. 365-19.000.
Hughes, William C.; Nelson, Wayne B.; and Possin, George E., to General Electric Company. Method and apparatus for randomizing memory site usage. 4,064,558, Cl. 364-900.000.
Hugo, Michel: *See—*
Thuillier, Jacques; and Hugo, Michel, 4,063,934, Cl. 75-122.000.
Hugon, Pierre: *See—*
Beregi, Laszlo; Hugon, Pierre; Duhault, Jacques; and Boulanger, Michelle, 4,064,245, Cl. 424-250.000.
Huguenin, Raymond; Matthey, Hubert; and Voumard, Martial, to

Societe Suisse pour l'Industrie Horlogere Management Services S.A. Apparatus for automatically adjusting the frequency of piezoelectric resonators in the form of bars or plates. 4,063,910, Cl. 51-413.000.
Huignard, Jean Pierre; Herriau, Jean Pierre; and Micheron, Francois, to Thomson-CSF. Electro-optic holographic storage device having unlimited record-erase capability. 4,063,795, Cl. 350-3.500.
Hukill, Marlin E. Changeable display device. 4,063,377, Cl. 40-28.00C.
Hull, Donald Robert, to Du Pont de Nemours, E. I., and Company. Conductive, extrudable polymer composition of poly(ε-caproamide) and carbon black. 4,064,075, Cl. 252-511.000.
Hundstad, Richard L.; and Farish, Owen, to Westinghouse Electric Corporation. Laser cavities with gas flow through the electrodes. 4,064,465, Cl. 331-94.5PE.
Hunninghaus, Kurt. Toilet seat cleaning system. 4,063,316, Cl. 4-233.000.
Hunter, Dennis: *See—*
Augstein, Joachim; Cairns, Hugh; Hunter, Dennis; and King, John, 4,064,256, Cl. 424-269.000.
Hupfl, Johann; Czermak, Manfred; Teichmann, Helmut; and Paul, Josef, to Hoechst Aktiengesellschaft; and Chemiefaser Lenzing Aktiengesellschaft. Manufacture of flame-retardant regenerated cellulose fibres. 4,063,883, Cl. 8-116.00P.
Huppertz, Josef: *See—*
Alder, Wilfried; Huppertz, Josef; Latka, Herbert; and Sperling, Gerhard, 4,064,063, Cl. 252-135.000.
Husband, Wallace T.; and Larlee, Howard A., to E-Z Rect-Metal Products Ltd. Frame construction. 4,063,835, Cl. 403-252.000.
Husbands, George E. M., to American Home Products Corporation. 15-Ethynyl-PGE_1. 4,064,165, Cl. 260-514.00D.
Huston, Paul O.: *See—*
Kippel, Edward A.; and Huston, Paul O., 4,063,913, Cl. 55-274.000.
Hwang, Yu-Tang, to Chemplex Company. Catalyst and method. 4,064,336, Cl. 526-172.000.
Hyler, John H.; and Orth, Edward G., to Westinghouse Air Brake Company. Power train for two-wheel tractor. 4,063,361, Cl. 37-129.000.
I-T-E Imperial Corporation: *See—*
Bacvarov, Dosio C., 4,063,691, Cl. 242-54.00R.
Gryctko, Carl E., 4,064,469, Cl. 335-6.000.
Netzel, Philip C., 4,063,355, Cl. 30-96.000.
Ichinose, Shiro. Automatic screen printing machine. 4,063,503, Cl. 101-123.000.
ICI Australia Limited: *See—*
Birchall, George Richard; Harney, Donald William Gerald; and Forsyth, Bruce Adam, 4,064,266, Cl. 424-304.000.
Serban, Alexander; Warner, Richard Burridge; and Alcock, Keith Thomas, 4,064,262, Cl. 424-285.000.
Ida, Fumihiro: *See—*
Hirose, Yusuke; Ida, Fumihiro; and Ito, Takehiko, 4,064,437, Cl. 250-273.000.
Ide, Junya: *See—*
Sakai, Kiyoshi; Kojima, Koichi; Ide, Junya; and Kobayashi, Shinsaku, 4,064,351, Cl. 560-121.000.
Ideal Security Hardware Corporation: *See—*
Waldo, Russell W., 4,063,765, Cl. 292-335.000.
Igarashi, Toshiji: *See—*
Yanaihara, Noboru; Igarashi, Toshiji; and Kunii, Youichi, 4,064,235, Cl. 424-177.000.
Iguchi, Shin-ichi: *See—*
Akai, Shin-ichi; Mori, Hideki; Shimoda, Takashi; and Iguchi, Shin-ichi, 4,063,972, Cl. 148-171.000.
Ihara Chemical Kogyo Kabushiki Kaisha: *See—*
Sato, Zenichi; Shimizu, Fumio; Kusano, Shoji; Takagi, Keiichiro; and Imamiya, Yoji, 4,064,200, Cl. 260-979.000.
Iida, Masakazu: *See—*
Sasamoto, Yoshifumi; and Iida, Masakazu, 4,063,505, Cl. 101-228.000.
Iikuni, Tetsuo: *See—*
Kosaka, Yujiro; Nakazawa, Hideaki; Iikuni, Tetsuo; and Akashi, Mitsumasa, 4,064,085, Cl. 260-29.70R.
Iizuka, Yutaka; and Nakamura, Soichi, to Nippon Kogaku K.K. Zoom lens for a projector. 4,063,800, Cl. 350-184.000.
Iizumi, Shozo: *See—*
Fujioka, Tokio; Kinugasa, Masayuki; Iizumi, Shozo; Teshima, Shizuhiro; and Shimizu, Isamu, 4,063,935, Cl. 75-128.00C.
Ikeda, Yoshitsugi: *See—*
Imai, Toshihiro; and Ikeda, Yoshitsugi, 4,063,802, Cl. 350-223.000.
Ikegai Goss Co. Ltd.: *See—*
Sasamoto, Yoshifumi; and Iida, Masakazu, 4,063,505, Cl. 101-228.000.
Ikegsi Iron Works, Ltd.: *See—*
Sasamoto, Yoshifumi; and Iida, Masakazu, 4,063,505, Cl. 101-228.000.
Ikoma, Mitsuhiro: *See—*
Yuda, Jiro; Morokoshi, Hiroshi; Hori, Michimasa; Ikoma, Mitsuhiro; and Aizawa, Takeshi, 4,064,420, Cl. 318-224.00A.
Illinois Tool Works Inc.: *See—*
Sidor, Edward F.; Camillo, Charles C.; and Bowen, Glenn W., 4,064,497, Cl. 340-197.000.
Imai, Toshihiro; and Ikeda, Yoshitsugi, to Olympus Optical Co., Ltd. Telephotographic lens system having short total length. 4,063,802, Cl. 350-223.000.
Imaichi, Kensaku: *See—*
Sata, Naoyasu; Imaichi, Kensaku; and Hirose, Tatsuzo, 4,063,414, Cl. 60-39.050.
Imamiya, Yoji: *See—*
Sato, Zenichi; Shimizu, Fumio; Kusano, Shoji; Takagi, Keiichiro; and Imamiya, Yoji, 4,064,200, Cl. 260-979.000.
IMI (TAMI) Institute for Research and Development: *See—*
Alon, Alexander, 4,064,220, Cl. 423-321.00R.
Imperial Chemical Industries Limited: *See—*
Dewdney, Thomas Gordon; Dowden, Dennis Albert; and Morris, Wyndham, 4,064,172, Cl. 260-583.00K.
Tomlin, Clive Dudley Spencer; Slater, John Walter; and Hartley, David, 4,063,926, Cl. 71-94.000.
Inaba, Naomi: *See—*
Ueno, Hiroshi; Inaba, Naomi; Makishima, Tokuo; and Wada, Shozo, 4,064,069, Cl. 252-429.00B.
Inata, Hiroo; and Kawase, Shoji, to Teijin Limited. Novel polyesters prepared from mixture of hydroquinone and bisphenols. 4,064,108, Cl. 260-47.00C.
Indramat-Gesellschaft fur Industrie-Rationalisierung und Automatisierung: *See—*
Krohn, Holger, 4,064,446, Cl. 318-578.000.
Industrial Filter & Pump Mfg. Co.: *See—*
Schmidt, Henry, Jr., 4,064,045, Cl. 210-81.000.
Ingersoll-Rand Company: *See—*
Ditson, J. D., 4,063,837, Cl. 403-307.000.
Inohara, Shu; Nagamune, Yasuyuki; and Tanigaki, Bunjiro, to Kabushiki Kaisha Kajitekkosho. Direct double twist cabler. 4,063,408, Cl. 57-58.540.
Inoue, Tokuta: *See—*
Sanda, Shougo; Inoue, Tokuta; Oishi, Kiyohiko; and Yamada, Toshio, 4,063,536, Cl. 123-25.00J.
Inoue, Tsuneo: *See—*
Kawamata, Takashi; Inoue, Tsuneo; and Hirota, Eiichi, 4,064,224, Cl. 423-598.000.
Insituform (Pipes & Structures) Ltd.: *See—*
Wood, Eric, 4,064,211, Cl. 264-95.000.
Institut Francais du Petrole: *See—*
Cheron, Jacques; and Catoire, Dany, 4,063,899, Cl. 23-284.000.
Grehier, Alain, 4,064,321, Cl. 429-34.000.
Rabilloud, Guy; and Sillion, Bernard, 4,064,176, Cl. 260-590.00D.
Institut National de la Sante et de la Recherche Medicale: *See—*
Choay, Jean; Trolard, Paul; and Febvre, Henri Lucien, 4,064,007, Cl. 195-1.800.
Instruments S.A.: *See—*
Lepere, Didier, 4,063,818, Cl. 356-100.000.
Intel Corporation: *See—*
Bayliss, John A., 4,063,409, Cl. 58-23.00R.
Interlake, Inc.: *See—*
Kyts, Robert B., 4,063,985, Cl. 156-359.000.
International Business Machines Corporation: *See—*
Abraham, Gerard; and Bergasse, Gaston, 4,063,812, Cl. 355-18.000.
Bluethman, Robert Glenn; McBride, Michael Eudell; and Rogers, Wayne Finis, 4,064,557, Cl. 364-900.000.
Crowe, William Ray; and Paulson, Thomas Michael, 4,063,630, Cl. 197-53.000.
Peressini, Peter Paul; Reith, Timothy Martin; and Sullivan, Michael James, 4,063,964, Cl. 148-1.500.
Simpson, Henry Wellington, 4,063,808, Cl. 355-3.0TR.
White, Edward Montcalm, 4,063,533, Cl. 118-658.000.
International Computers Limited: *See—*
Babb, Edward, 4,064,489, Cl. 364-200.000.
International Flavors & Fragrances Inc.: *See—*
Evers, William J.; Heinsohn Jr., Howard H.; and Vock, Manfred Hugo, 4,064,278, Cl. 426-535.000.
Evers, William J.; Heinsohn, Howard H., Jr.; and Vock, Manfred Hugo, 4,064,280, Cl. 426-535.000.
Hall, John B.; Sprecker, Mark A.; Schmitt, Frederick Louis; and Vock, Manfred Hugo, 4,064,281, Cl. 426-538.000.
Light, Kenneth K.; Vock, Manfred Hugo; Shuster, Edward J.; and Schmitt, Frederick Louis, 4,064,184, Cl. 260-617.00R.
Tseng, Ching Y., 4,064,144, Cl. 260-343.000.
Withycombe, Donald Arthur; Hruza, Anne; Vock, Manfred Hugo; Giacino, Christopher; Mookherjee, Braja Dulal; Pittet, Alan Owen; and Schreiber, William L., 4,064,279, Cl. 426-535.000.
International Standard Electric Corporation: *See—*
Kimmich, Klaus, 4,063,528, Cl. 118-7.000.
Pinede, Edouard; and Litser, John Fraser, 4,064,373, Cl. 179-99.000.
Smith, Colin F. G.; Oldham, Ronald C.; Hedges, Michael J.; New, Alan J.; and Pearson, William, 4,064,358, Cl. 174-70.00S.
International Telephone and Telegraph Corporation: *See—*
Borsuk, Leslie M.; Anderson, Randall H.; Grimsby, Emerson A.; and Malsberger, Robert F., 4,063,351, Cl. 29-629.000.
Sears, Karl David; and Casebier, Ronald Leroy, 4,064,166, Cl. 260-511.000.
Interroll Fordertechnik GmbH & Co. KG: *See—*
vom Stein, Hans, 4,063,636, Cl. 198-781.000.
Intersil, Inc.: *See—*
Shier, John S., 4,064,527, Cl. 357-48.000.
Irie, Nobuhiko; and Katayama, Hideaki, to Mitsubishi Jukogyo Kabushiki Kaisha. Forming apparatus for a breaker layer to be used in a radial tire. 4,063,987, Cl. 156-417.000.
Irvinware Division of Beatrice Foods Company: *See—*
Bozzo, George J., 4,063,473, Cl. 81-3.370.
Ishibashi, Yasumasa: *See—*
Yamashita, Yuzo; Kishi, Masahiro; and Ishibashi, Yasumasa, 4,064,219, Cl. 423-242.000.

Ishida, Atsuo: *See—*
Asakawa, Toshiro; Ishida, Atsuo; and Hayashi, Shizuo, 4,064,231, Cl. 424-52.000.

Ishii, Yasuo; Nishimura, Naozumi; and Abe, Kohei, to Taisei Kensetsu Kabushiki Kaisha; and Tohoku Kinzoku Kogyo Kabushiki Kaisha. Process for detecting a misfired explosive. 4,063,510, Cl. 102-23.000.

Ishikawa, Yoshihiro: *See—*
Takagi, Atsushi; Kuroiwa, Hiroyuki; Miyaguchi, Masao; Kawamura, Tateo; and Ishikawa, Yoshihiro, 4,063,424, Cl. 61-63.000.

Ishimaru, Toshiyasu. Hydroxy-substituted cephalosporins. 4,064,122, Cl. 544-26.000.

Ital Elettronica S.p.A.: *See—*
Casale, Renato, 4,064,441, Cl. 250-363.00S.

Itami, Teruhiko: *See—*
Takiguchi, Koichi; and Itami, Teruhiko, 4,064,313, Cl. 428-447.000.

Ito, Fumio: *See—*
Mashimo, Yukio; Sakurada, Nobuaki; Ito, Tadashi; Ito, Fumio; Shinoda, Nobuhiko; and Murakami, Hiroyashu, 4,064,515, Cl. 354-23.00D.

Ito, Shintaro: *See—*
Tokumaru, Yukuya; Nakai, Masanori; Shinozaki, Satoshi; Nakamura, Junichi; Ito, Shintaro; and Nishi, Yoshio, 4,064,526, Cl. 357-46.000.

Ito, Tadashi: *See—*
Mashimo, Yukio; Sakurada, Nobuaki; Ito, Tadashi; Ito, Fumio; Shinoda, Nobuhiko; and Murakami, Hiroyashu, 4,064,515, Cl. 354-23.00D.

Ito, Takehiko: *See—*
Hirose, Yusuke; Ida, Fumihiro; and Ito, Takehiko, 4,064,437, Cl. 250-273.000.

Itoi, Nobuo; Shimamura, Teruo; Fukami, Yoshio; Mori, Hidetoshi; and Miwa, Kenji, to Nippon Kogaku K.K. Chemical reaction velocity measuring apparatus. 4,063,816, Cl. 356-93.000.

Iven, Gerd H. Combination loudspeaker and sign holder. 4,063,614, Cl. 181-152.000.

Ivey, John Saxon; and Silberschlag, Russell Earl, to Borg-Warner Corporation. Fluid coupling with centrifugal and torque responsive lock up clutch. 4,063,623, Cl. 192-3.310.

Iwano, Yuji: *See—*
Hirai, Koichi; Iwano, Yuji; Saito, Tokio; Hiraoka, Tetsuo; Kishida, Yukichi; and Nishimura, Takuzo, 4,064,137, Cl. 260-306.70C.

Iwasa, Hitoo: *See—*
Kano, Gota; Tsuda, Naoyuki; and Iwasa, Hitoo, 4,064,525, Cl. 357-42.000.

Iwasaki, Kenji; Sawa, Tsuna; and Hijikata, Sotaro, to Tokyo Shibaura Electric Co., Ltd. X-ray tube for analytic use. 4,064,411, Cl. 313-32.000.

J. H. Fenner & Co. Limited: *See—*
Kerr, William, 4,063,741, Cl. 277-37.000.

J. I. Case Company: *See—*
Parquet, Donald James; and Pedersen, Carl Oluf, 4,063,489, Cl. 91-445.000.

Jackson, Barry, to Lonza, Ltd. Process for the production of orotic acid. 4,064,126, Cl. 260-260.000.

Jacobs, Paul L., to United States of America, Army. Thrust vector control by circulation control over aerodynamic surfaces in a supersonic nozzle. 4,063,685, Cl. 239-265.170.

Jager, Philipp: *See—*
Becker, Franz; and Jager, Philipp, 4,064,226, Cl. 423-657.000.

Janniere, Alain, to Pont-A-Mousson S.A. Injection and blowing machine for manufacturing hollow bodies of plastics material. 4,063,867, Cl. 425-526.000.

Janoski, Edward J.: *See—*
Schneider, Abraham; and Janoski, Edward J., 4,064,180, Cl. 260-611.00F.

Janssen, Paul Adriaan Jan; Van Daele, Georges Henri Paul; and Boey, Jozef Martin, to Janssen Pharmaceutica N.V. Aroyl-substituted phenylacetamide derivatives. 4,064,132, Cl. 260-293.620.

Janssen Pharmaceutica N.V.: *See—*
Janssen, Paul Adriaan Jan; Van Daele, Georges Henri Paul; and Boey, Jozef Martin, 4,064,132, Cl. 260-293.620.

Jansz, Joost W., to Hollandsche Beton Groep N.V. Method and apparatus for underwater pile driving. 4,063,599, Cl. 173-1.000.

Jenkins, Eugene Michael. Leveling discharge system for ready-mix trucks. 4,063,628, Cl. 193-10.000.

Jennings, Alan K., to Pertec Computer Corporation. CRT key station which is responsive to centralized control. 4,064,561, Cl. 364-900.000.

Jessup, Robert L., to Halliburton Company. Full-opening annulus pressure operated sampler valve with reverse circulation valve. 4,063,593, Cl. 166-317.000.

Jetten, Gerbrand, to U.S. Philips Corporation. Time registration arrangement provided with a television camera. 4,064,540, Cl. 358-142.000.

Jo-Line Tools, Inc.: *See—*
Solomon, Donald F., 4,063,626, Cl. 192-43.100.

Jochum, Peter, to Hilti Aktiengesellschaft. Charge feeding arrangement for an explosive charge driven setting gun. 4,063,672, Cl. 227-10.000.

Johansson, Arne. Forming apparatus for synthetic-material tubes. 4,063,862, Cl. 425-392.000.

Johnson, Alfred D., to GTE Sylvania Incorporated. Cathode ray tube base. 4,064,412, Cl. 313-318.000.

Johnson, Herbert: *See—*
Gorini, Robert Francis; Johnson, Herbert; and Sillars, Frederick Stirling, 4,063,527, Cl. 118-5.000.

Johnson, Herbert G., to Upjohn Company, The. Dosage regimen. 4,064,248, Cl. 424-258.000.

Johnson, Jian L.: *See—*
Wiley, Paul F.; and Johnson, Jian L., 4,064,340, Cl. 536-17.000.
Wiley, Paul F.; and Johnson, Jian L., 4,064,341, Cl. 536-17.000.

Johnson & Johnson: *See—*
Tritsch, Ludwig, 4,063,559, Cl. 128-287.000.

Johnson, Kenneth C., to F. J. Littell Machine Company. Cam feed with cycle synchronization. 4,063,499, Cl. 100-215.000.

Johnson, Roy Henry; and Graham, Donald K., to Borg-Warner Corporation. Fuel mixer. 4,063,905, Cl. 48-180.00R.

Johnson, William S.; and Dubois, Grant E., to Leland Stanford Junior University, The Board of Trustees of. Olefinically unsaturated substituents at C-11 of steroid cyclization precursors. 4,064,185, Cl. 260-617.00R.

Johnston, Howard, to Dow Chemical Company, The. Composition and method of controlling undesired plant growth with substituted pyridinyloxy(thio)phenyl -acetamides, -ureas and urea derivatives. 4,063,928, Cl. 71-94.000.

Jones, Henry B.; and Bunn, Dorrance P., Jr., to Texaco Inc. Methods for forming a high temperature and shock resistant insulated pipe. 4,063,344, Cl. 29-455.00R.

Jones, Henry W.: *See—*
Hildebrand, Alfred P.; Morrow, Howard E.; and Jones, Henry W., 4,064,390, Cl. 235-470.000.

Jones, Leslie R. Radio mounting bracket. 4,063,683, Cl. 339-119.00R.

Jones, W. Richard; and Kraig, Harry J., to Mercury Metal Products. Clamp for tubing. 4,063,336, Cl. 24-277.000.

Jonkers, Cornelius Otto. Method and a device for continuously measuring a flow of material. 4,063,456, Cl. 73-228.000.

Jonuska, Daniel C.: *See—*
Cross, Edward F.; Kwok, Munson A.; and Jonuska, Daniel C., 4,064,535, Cl. 358-113.000.

Jossin, Alain: *See—*
Farge, Daniel; Jossin, Alain; Ponsinet, Gerard; and Reisdorf, Daniel, 4,064,247, Cl. 424-258.000.

Joyce, George M.: *See—*
Peterson, Roger L.; and Joyce, George M., 4,064,359, Cl. 174-107.000.

Judd, Edwin B., to General Electric Company. Flip lip boot for plugs and connectors. 4,063,793, Cl. 339-60.00R.

Junge, Rodney G., to Kroy Industries, Inc. Film processing apparatus. 4,063,324, Cl. 15-100.000.

Justrite Manufacturing Co.: *See—*
Flider, Frank S., 4,063,667, Cl. 222-470.000.

Jutte, Hans; and Stuckmann, Dieter, to Gewerkschaft Eisenhutte Westfalia. Tunnel driving apparatus. 4,063,425, Cl. 61-85.000.

K-S-H, Inc.: *See—*
Korn, William W., 4,064,433, Cl. 362-330.000.

Kabel-und Metallwerke Gutehoffnungshutte AG: *See—*
Fuhrmann, Siegfried, 4,063,757, Cl. 285-149.000.

Kabushiki Kaisha Kajitekkosho: *See—*
Inohara, Shu; Nagamune, Yasuyuki; and Tanigaki, Bunjiro, 4,063,408, Cl. 57-58.540.

Kadish, Ben-Ami; and Parker, David I., to United States of America, Army. Target sensing device. 4,063,513, Cl. 102-70.20R.

Kadoya, Isamu: *See—*
Saika, Daini; Yanagawa, Takuma; Mizuta, Masaaki; and Kadoya, Isamu, 4,064,342, Cl. 536-59.000.

Kagerer, Franz, to Friedrich Deckel Aktiengesellschaft. Tool chuck. 4,063,488, Cl. 90-11.00D.

Kaiser, Arthur; Moore, James Kenneth; and Glenn, William E., Jr., to CBS Inc. Noise reduction system for color television. 4,064,530, Cl. 358-36.000.

Kaiser, Robert H.: *See—*
Downing, James H.; Kaiser, Robert H.; Murphy, William L.; and Vaughn, William R., 4,063,932, Cl. 75-61.000.

Kakauridze, Dali Mitrofanovna: *See—*
Korshak, Vasily Vladimirovich; Gribova, Irina Alexandrovna; Krasnov, Alexandr Petrovich; Teplyakov, Mikhail Mikhailovich; Elerdashvili, Georgy Vasilievich; Gureeva, Galina Ilinichna; Chebotarev, Valery Panteleimonovich; Dvorikova, Raisa Alexeevna; Sergeev, Vladimir Alexandrovich; and Kakauridze, Dali Mitrofanovna, 4,064,097, Cl. 260-37.00R.

Kali-Chemie Aktiengesellschaft: *See—*
Milkowski, Wolfgang; Zeugner, Horst; von Eickstedt, Klaus-Wolf; and Stuhmer, Werner, 4,064,128, Cl. 260-268.00R.

Kallmeyer, Albert W.: *See—*
O'Brien, John R.; Holman, Harry A., Jr.; and Kallmeyer, Albert W., 4,063,684, Cl. 239-265.110.

Kamarian, Georgy Mikirtychevich. Electrolyzer. 4,064,031, Cl. 204-256.000.

Kampwirth, Robert T.: *See—*
Wu, Cheng-Teh; Falco, Charles M.; and Kampwirth, Robert T., 4,064,029, Cl. 204-192.00S.

Kanazawa, Tamotsu: *See—*
Hamano, Sachiyuki; Kanazawa, Tamotsu; and Kitamura, Shin-ichi, 4,064,169, Cl. 260-564.00R.

Kano, Gota; Tsuda, Naoyuki; and Iwasa, Hitoo, to Matsushita Electric Industrial Co., Ltd. Negative-resistance semiconductor device. 4,064,525, Cl. 357-42.000.

Kansai Paint Co., Ltd.: *See—*
Miyosawa, Yoshiaki; and Umemoto, Sueo, 4,064,028, Cl. 204-181.000.

Kanzaki Paper Manufacturing Company, Ltd.: *See—*
Fujita, Seigoro; and Kitahori, Tojiro, 4,064,304, Cl. 428-207.000.

Kao Soap Co., Ltd.: *See—*
Asakawa, Toshiro; Ishida, Atsuo; and Hayashi, Shizuo, 4,064,231, Cl. 424-52.000.

Kaplan, Murray A.; Gottstein, William J.; and Granatek, Alphonse P., to Bristol-Myers Company. Cephalosporins derivatives 7-cyclized α-amino-3-heterothio. 4,064,345, Cl. 544-27.000.

Karl Schmidt GmbH: *See—*
Kreisl, Walter, 4,063,789, Cl. 339-3.00S.

Karrer, Friedrich, to Ciba-Geigy Corporation. 4-[(4-Phenoxy and benzyl)-phenoxy]-butyric acid esters. 4,064,269, Cl. 424-308.000.

Karrer, Friedrich: *See—*
Farooq, Saleem; Drabek, Jozef; Gsell, Laurenz; Karrer, Friedrich; and Meyer, Willy, 4,064,263, Cl. 424-285.000.

Karrer, Henry E.: *See—*
Dias, J. Fleming; Karrer, Henry E.; and Tykulsky, Alexander, 4,064,550, Cl. 361-283.000.

Karsh, Herbert, to Bell & Howell Company. Pressure transducing methods and apparatus. 4,063,553, Cl. 128-214.00F.

Kashio, Toshio, to Casio Computer Co., Ltd. Information processor. 4,064,553, Cl. 364-200.000.

Kashioka, Seiji: *See—*
Mese, Michihiro; Miyatake, Takafumi; Kashioka, Seiji; and Hamada, Toshimitsu, 4,064,484, Cl. 340-146.3AG.

Kashiwagi, Masatoshi: *See—*
Saitoh, Seiichiroh; Kashiwagi, Masatoshi; and Marubayashi, Toshiaki, 4,064,098, Cl. 260-40.00R.

Katayama, Hideaki: *See—*
Irie, Nobuhiko; and Katayama, Hideaki, 4,063,987, Cl. 156-417.000.

Kathawala, Faizulla G., to Sandoz, Inc. Treating lipidemia with substituted diphenyl ether halides and compositions thereof. 4,064,273, Cl. 424-340.000.

Katz, Leonard R.: *See—*
Desmarchais, Walter E.; Katz, Leonard R.; and Silverblatt, Bernard L., 4,064,002, Cl. 176-38.000.

Katzenellenbogen, John A., to University of Illinois Foundation. Synthesis of isoprenoid 1,5-dienes. 4,064,150, Cl. 260-413.000.

Kauer, Harald: *See—*
Wilken, Joachim; Wiemer, Karl-Heinz; and Kauer, Harald, 4,063,815, Cl. 356-29.000.

Kaufman, Marvin L., to Mobil Oil Corporation. Polyepoxide ether polyacrylate mixtures. 4,064,026, Cl. 204-159.190.

Kawaguchi, Toshiro; Fujii, Setuo; and Matsui, Katsuhiko, to Ube Industries, Ltd. Apparatus for severing billets. 4,063,483, Cl. 83-382.000.

Kawakubo, Katsuhiko: *See—*
Konotsune, Takuo; and Kawakubo, Katsuhiko, 4,063,925, Cl. 71-92.000.

Kawamata, Takashi; Inoue, Tsuneo; and Hirota, Eiichi, to Matsushita Electric Industrial Co., Ltd. Method of making fibrous alkali titanates. 4,064,224, Cl. 423-598.000.

Kawamura, Tateo: *See—*
Takagi, Atsushi; Kuroiwa, Hiroyuki; Miyaguchi, Masao; Kawamura, Tateo; and Ishikawa, Yoshihiro, 4,063,424, Cl. 61-63.000.

Kawanabe, Tsuyoshi, to Canon Kabushiki Kaisha. Apparatus for suppressing undesired information. 4,064,559, Cl. 364-900.000.

Kawasaki, Motoo; Mizumoto, Shozo; and Nawafune, Hidemi, to Kawasaki, Motoo; and Ebara-Udylite Co., Ltd. Method of recovering metals from sludges. 4,064,022, Cl. 204-105.00R.

Kawase, Shoji: *See—*
Inata, Hiroo; and Kawase, Shoji, 4,064,108, Cl. 260-47.00C.

Kawecki Berylco Industries, Inc.: *See—*
Stephens, William W.; and McKeighen, James F., 4,063,719, Cl. 266-130.000.

Kayen, Samuel L.: *See—*
Smilow, George; and Kayen, Samuel L., 4,063,669, Cl. 223-87.000.

Kazangapov, Alken Nurmagambetovich: *See—*
Akushsky, Izrail Yakovlevich; Burtsev, Vladimir Mikhailovich; Kazangapov, Alken Nurmagambetovich; and Pak, Ivan Timofeevich, 4,064,400, Cl. 364-746.000.

Kearney, Joseph P., to Westinghouse Electric Corporation. Controlled arc stream in high intensity discharge lamps. 4,064,418, Cl. 315-348.000.

Keary, William V.: *See—*
Beningson, Robert M.; Beningson, Herbert E.; Menon, Narayanankutty V. P.; Nadkarni, Ravindra M.; Lamb, Thomas J.; Fox, Lee K.; and Keary, William V., 4,063,903, Cl. 44-2.000.

Kee, Richard C., to Polaroid Corporation. Regulated strobe for camera with sixth flash inhibit. 4,064,519, Cl. 354-141.000.

Kelbel, Donald William, to Borg-Warner Corporation. Compact planetary gear assembly. 4,063,470, Cl. 74-785.000.

Kelleher, John J., to United States of America, Army. Pulse voltage regulator. 4,064,407, Cl. 307-268.000.

Keller, Franz, to Buhrer, Erwin. Mold forming apparatus with mold flask stabilizing means. 4,063,586, Cl. 164-207.000.

Kellogg, Robert C., to Monsanto Company. Method for feeding and discharging blow molds. 4,064,210, Cl. 264-94.000.

Kelly, Vincent S.; and Munns, Murry W., Jr., to Burlington Industries, Inc. Slotted take-up package tube for open-end spinning machines. 4,063,696, Cl. 242-125.100.

Kelsey-Hayes Company: *See—*
Tribe, Leonard T., 4,063,785, Cl. 303-115.000.

Kelz, Norbert R. Pressure moulding machines and mould parts therefor. 4,063,869, Cl. 425-574.000.

Kendall Co., The: *See—*
Samour, Carlos M.; and Richards, Mildred C., 4,064,091, Cl. 260-29.6HN.

Kennametal Inc.: *See—*
Barkley, George G.; and Sorice, Edward L., 4,063,842, Cl. 408-146.000.
Barkley, George G.; Cmar, John A., Jr.; and McCreery, Howard J., 4,063,843, Cl. 408-146.000.

Kentucky Metals, Inc.: *See—*
Watkins, Shelton, Jr., 4,063,742, Cl. 277-53.000.

Kerr, William, to J. H. Fenner & Co. Limited. Fluid face seal assemblies. 4,063,741, Cl. 277-37.000.

Kertesz, Denis John: *See—*
Marx, Michael; and Kertesz, Denis John, 4,064,240, Cl. 424-241.000.

Kess, Leo: *See—*
Rieger, Hansjorg, Dr.; Kess, Leo; and Holzwarth, Dietmar, 4,063,583, Cl. 152-241.000.

Keznickl, Eduard: *See—*
Freudenschuss, Otto; Keznickl, Eduard; and Scheiber, Robert, 4,064,520, Cl. 354-196.000.

Khoe, Teng Hian. Method of suppressing snoring. 4,064,253, Cl. 424-266.000.

Kiencke, Uwe: *See—*
Gorille, Ingo; Borst, Wolfgang; Klotzner, Winfried; Ott, Karl; Moller, Heinz; Honig, Gunter; Kiencke, Uwe; Zechnall, Martin; Flaig, Ulrich; Schulz, Alfred; and Pagel, Ernst-Olav, 4,063,539, Cl. 123-117.00D.

Kikkoman Shoyu Co., Ltd.: *See—*
Yokotsuka, Tamotsu; Asao, Yasuo; Matsuura, Masaru; and Hashimoto, Hikotaka, 4,064,277, Cl. 426-331.000.

Kikuchi, Shoji: *See—*
Fujiwhara, Mitsuto; Endo, Takaya; Kikuchi, Shoji; and Satoh, Ryosuke, 4,063,950, Cl. 96-66.300.

Kim Lighting, Inc.: *See—*
Compton, Wayne W.; and Shaner, Richard B., 4,064,432, Cl. 362-457.000.

Kimball International, Inc.: *See—*
Robinson, John William, 4,063,484, Cl. 84-1.240.

Kimmich, Klaus, to International Standard Electric Corporation. Arrangement for color marking insulated electrical conductors. 4,063,528, Cl. 118-7.000.

Kincaid, Elmo. Four wheel drive power train. 4,063,609, Cl. 180-70.00R.

Kincaid, Ray Charles. Tailgate vent. 4,063,772, Cl. 296-1.00S.

King, Charles; and Dyche, George E., to General Kinetics, Incorporated. Gas detector tube reader. 4,063,821, Cl. 356-167.000.

King, Charles W.: *See—*
Goehler, Rolf J.; and King, Charles W., 4,064,462, Cl. 330-2.000.

King, John: *See—*
Augstein, Joachim; Cairns, Hugh; Hunter, Dennis; and King, John, 4,064,256, Cl. 424-269.000.

King, Lowell A.; Brabson, George D., Jr.; Erbacher, John K.; Seegmiller, David W.; Fannin, Armand A., Jr.; and Viola, John T., to United States of America, Air Force. Aluminum-chlorine thermal battery. 4,064,327, Cl. 429-112.000.

Kinugasa, Masayuki: *See—*
Fujioka, Tokio; Kinugasa, Masayuki; Iizumi, Shozo; Teshima, Shizuhiro; and Shimizu, Isamu, 4,063,935, Cl. 75-128.00C.

Kippel, Edward A.; and Huston, Paul O., to Becton, Dickinson and Company. Bacteria filters with transparent housings. 4,063,913, Cl. 55-274.000.

Kipple, Harry P.; Alke, Roger J.; and Price, Charles E., to Westinghouse Electric Corporation. Fluidized bed powder chamber. 4,063,532, Cl. 118-429.000.

Kirby, Jane Parsons; and Borders, Donald Bruce, to American Cyanamid Company. Process for producing antibacterial antibiotics AM31α, AM31β, and AM31γ with *Streptoverticillium netropsis*. 4,064,012, Cl. 195-80.00R.

Kirita, Kei; Tsuji, Yasutaka; and Moriya, Takahiko, to Tokyo Shibaura Electric Co., Ltd. Method of making a semiconductor device. 4,063,973, Cl. 148-188.000.

Kirjavainen, Alvi; and Koskimies, Jouni, to Valmet Oy. Hydraulic headbox and a gas enclosure communicating therewith. 4,063,997, Cl. 162-340.000.

Kirkpatrick, Conilee G.; Norton, James F.; and Possin, George E., to General Electric Company. Ion implanted archival memory media and methods for storage of data therein. 4,064,495, Cl. 365-103.000.

Kirkwood, Robert E., to Raymond Lee Organization, Inc., The. Fence formed from prefabricated sections. 4,063,714, Cl. 256-24.000.

Kirsch, Andrew F.: *See—*
Mandel, Alan F.; Kirsch, Andrew F.; and Eichler, Kenneth M., 4,063,620, Cl. 187-29.00R.

Kishi, Masahiro: *See—*
Yamashita, Yuzo; Kishi, Masahiro; and Ishibashi, Yasumasa, 4,064,219, Cl. 423-242.000.

Kishida, Yukichi: *See—*
Hirai, Koichi; Iwano, Yuji; Saito, Tokio; Hiraoka, Tetsuo; Kishida, Yukichi; and Nishimura, Takuzo, 4,064,137, Cl. 260-306.70C.

Kishimoto, Jyuji; Sado, Ichiro; and Sano, Yuji, to Canon Kabushiki Kaisha. Electronic calculator. 4,064,398, Cl. 364-709.000.

Kissa, Erik, to Du Pont de Nemours, E. I., and Company. Halosolvent dyeing process for polyester with cationic dyes having sulfosuccinate anions. 4,063,889, Cl. 8-168.00C.

Kitagawa, Masahiro: *See*—
Maitani, Yoshihisa; Shimoyama, Kunio; Yoshida, Muneaki; Hashimoto, Akihiko; and Kitagawa, Masahiro, 4,064,517, Cl. 354-51.000.

Kitago, Harumasa: *See*—
Toyama, Tadao; Watanabe, Masaru; and Kitago, Harumasa, 4,063,507, Cl. 101-467.000.

Kitahori, Tojiro: *See*—
Fujita, Seigoro; and Kitahori, Tojiro, 4,064,304, Cl. 428-207.000.

Kitamura, Shin-ichi: *See*—
Hamano, Sachiyuki; Kanazawa, Tamotsu; and Kitamura, Shin-ichi, 4,064,169, Cl. 260-564.00R.

Kitay, Barry E., to Cooper, Maurice Jay; and Cooper, Ethel. Golf tool. 4,063,731, Cl. 273-32.00B.

Kitayama, Seishi; Sato, Akira; and Tamura, Junzo, to Kokusai Denshin Denwa Kabushiki Kaisha. Echo cancelling system for multiplex telephone circuits. 4,064,378, Cl. 179-170.200.

Klahn, Uwe: *See*—
Oberwelland, Hugo; and Klahn, Uwe, 4,063,864, Cl. 425-433.000.

Klatt, William M.; Graves, Wayne H.; and Buuck, Robert E., to American Medical Systems, Inc. Method and apparatus for micturition analysis. 4,063,548, Cl. 128-2.00R.

Klauke, Erich: *See*—
Sirrenberg, Wilhelm; Schramm, Jurgen; Klauke, Erich; Hammann, Ingeborg; and Stendel, Wihelm, 4,064,267, Cl. 424-304.000.

Klauschie, Robert W.: *See*—
Carter, William M.; Klauschie, Robert W.; and Schillreff, George H., 4,063,485, Cl. 89-1.816.

Kleeberg, Ulrich; Leimkuhler, Jurgen; Knospe, Jurgen; and Stohr, Manfred, to STEAG Aktiengesellschaft. Method of making pellets usable as aggregate or filler. 4,064,212, Cl. 264-117.000.

Kleykamp, Donald L.; Neroni, Peter J.; Grabovez, Victor M.; and Holden, Homer N., to Dayco Corporation. Fluid conduit assembly. 4,063,790, Cl. 339-16.00R.

Kleykamp, Donald L.: *See*—
Neroni, Peter J.; and Kleykamp, Donald L., 4,064,355, Cl. 174-47.000.

Klisch, Stephen Cajetan; and Martin, Charles Andrew, to Colgate-Palmolive. Olefin sulfonate detergent compositions. 4,064,076, Cl. 252-542.000.

Klockner Humboldt Deutz Aktiengesellschaft: *See*—
Vogt, Hans-Wilhelm; and Frogermann, Gerd, 4,063,458, Cl. 73-355.00R.

Klockner-Werke AG: *See*—
Bahre, Karl; and Krohm, Reinhold, 4,063,782, Cl. 299-34.000.

Klopping, Norman Conrad, to Dresser Industries, Inc. Torque limiting screwdriver. 4,063,474, Cl. 81-52.40R.

Klotzner, Winfried: *See*—
Gorille, Ingo; Borst, Wolfgang; Klotzner, Winfried; Ott, Karl; Moller, Heinz; Honig, Gunter; Kiencke, Uwe; Zechnall, Martin; Flaig, Ulrich; Schulz, Alfred; and Pagel, Ernst-Olav, 4,063,539, Cl. 123-117.00D.

Knauer, Karl; and Pfleiderer, Hans Joerg, to Siemens Aktiengesellschaft. Information memory for storing information in the form of electric charge carriers and method of operating thereof. 4,064,491, Cl. 365-149.000.

Knepp, Donald E. Escape device. 4,063,615, Cl. 182-5.000.

Knorr-Bremse GmbH: *See*—
Pick, Peter, 4,063,784, Cl. 303-69.000.

Knospe, Jurgen: *See*—
Kleeberg, Ulrich; Leimkuhler, Jurgen; Knospe, Jurgen; and Stohr, Manfred, 4,064,212, Cl. 264-117.000.

Knoth, Dale W.: *See*—
Lipson, Melvin A.; Knoth, Dale W.; Custer, Walter D.; and Gilano, Michael N., 4,064,287, Cl. 427-53.000.

Kobayashi, Shinsaku: *See*—
Sakai, Kiyoshi; Kojima, Koichi; Ide, Junya; and Kobayashi, Shinsaku, 4,064,351, Cl. 560-121.000.

Koch, Klaus, to Paul Troester Maschinenfabrik. Process and apparatus for extruding plastic and similar materials. 4,063,718, Cl. 366-75.000.

Koenig, Harry J., to United States of America, Navy. High speed digital switch. 4,064,360, Cl. 178-3.000.

Koerner, Gotz; Schmidt, Gunter; Langner, Jaroslav; and Patzke, Hans-Jurgen, to Th. Goldschmidt AG. Textile fiber finishes. 4,064,057, Cl. 252-8.600.

Koester, Eberhard: *See*—
Schoenafinger, Eduard; Schwarzmann, Matthias; and Koester, Eberhard, 4,064,292, Cl. 427-132.000.

Kohler, George O.: *See*—
Saunders, Robert M.; and Kohler, George O., 4,064,283, Cl. 426-583.000.

Kojima, Koichi: *See*—
Sakai, Kiyoshi; Kojima, Koichi; Ide, Junya; and Kobayashi, Shinsaku, 4,064,351, Cl. 560-121.000.

Kokubo, Eiichi; and Miyagawa, Tuyoshi, to Laurel Bank Machine Co., Ltd. Counting method in a leaves counting machine. 4,064,391, Cl. 235-92.0SB.

Kokusai Denshin Denwa Co. Ltd.: *See*—
Sakaki, Hiroshi; Shintani, Sotokichi; and Kuroda, Hidemi, 4,064,397, Cl. 364-724.000.

Kokusai Denshin Denwa Kabushiki Kaisha: *See*—
Kitayama, Seishi; Sato, Akira; and Tamura, Junzo, 4,064,378, Cl. 179-170.200.

Kolitz, Volker: *See*—
Beck, Kurt-Gunther; Rohde, Wolfgang; Stalherm, Dieter; and Kolitz, Volker, 4,064,017, Cl. 201-1.000.

Kollman, Carl J., to Rohm and Haas Company. Liquid phase adsorption using partially pyrolyzed polymer particles. 4,064,043, Cl. 210-40.000.

Kondo, Shoji: *See*—
Seino, Kuniki; and Kondo, Shoji, 4,063,811, Cl. 355-15.000.

Konishiroku Photo Industry Co., Ltd.: *See*—
Fujiwhara, Mitsuto; Endo, Takaya; Kikuchi, Shoji; and Satoh, Ryosuke, 4,063,950, Cl. 96-66.300.

Konotsune, Takuo; and Kawakubo, Katsuhiko, to Sankyo Company Limited. Herbicidal compositions. 4,063,925, Cl. 71-92.000.

Koppers Company, Inc.: *See*—
Bretz, George Miller, 4,064,222, Cl. 423-393.000.

Korn, William W., to K-S-H, Inc. Prismatic lighting panel. 4,064,433, Cl. 362-330.000.

Korobov, Oleg Evgenievich: *See*—
Bochkarev, Ellin Petrovich; Maslov, Vadim Nikolaevich; Voronin, Nikolai Georgievich; Korobov, Oleg Evgenievich; and Gavrilin, Eduard Ivanovich, 4,063,529, Cl. 118-49.100.

Korshak, Vasily Vladimirovich; Gribova, Irina Alexandrovna; Krasnov, Alexandr Petrovich; Teplyakov, Mikhail Mikhailovich; Elerdashvili, Georgy Vasilievich; Gureeva, Galina Ilinichna; Chebotarev, Valery Panteleimonovich; Dvorikova, Raisa Alexeevna; Sergeev, Vladimir Alexandrovich; and Kakauridze, Dali Mitrofanovna. Antifriction polymer material. 4,064,097, Cl. 260-37.00R.

Kosaka, Yujiro; Nakazawa, Hideaki; Iikuni, Tetsuo; and Akashi, Mitsumasa, to Toyo Soda Manufacturing Co., Ltd. Process for producing cationic latexes. 4,064,085, Cl. 260-29.70R.

Koskimies, Jouni: *See*—
Kirjavainen, Alvi; and Koskimies, Jouni, 4,063,997, Cl. 162-340.000.

Kostylev, Alexandr Dmitrievich: *See*—
Gurkov, Konstantin Stepanovich; Nazarov, Nikolai Grigorievich; Cherednikov, Evgeny Nikolaevich; Plavskikh, Vladimir Dmitrievich; Rozhkov, Leonid Georgievich; Tkach, Khaim Berkovich; Grigoraschenko, Vladimir Alexandrovich; Kostylev, Alexandr Dmitrievich; Davydov, Vasily Georgievich; and Zuev, Valentin Alexeevich, 4,063,423, Cl. 61-53.620.

Kotlarchik, Carl, Jr.; Minsk, Louis M.; and Fletcher, George L., Jr., to Eastman Kodak Company. N-(Vinylphenyl) sulfonamides. 4,064,168, Cl. 260-556.00A.

Koubek, Michael, to Siemens Aktiengesellschaft. Process and circuit for decoding the output signal of a camera tube in a single-tube color television camera. 4,064,531, Cl. 358-44.000.

Kouchich, Allan V.; and Marshall, Robert, to Allen-Bradley Company. Thick film varistor and method of making the same. 4,064,475, Cl. 338-20.000.

Kozikowski, Eugene. Culinary utensil. 4,063,496, Cl. 99-419.000.

Kozlow, Michael R.: *See*—
Harting, Louis L.; and Kozlow, Michael R., 4,063,573, Cl. 138-155.000.

Kozlowski, Edward C.; and Chamlin, Matthew D. Composite flexible, semi-rigid materials and process for making same. 4,064,302, Cl. 428-152.000.

Kraftwerk Union Aktiengesellschaft: *See*—
Kral, Rudolf, 4,063,534, Cl. 122-510.000.
Wittchow, Eberhard; and Kral, Rudolf, 4,063,522, Cl. 110-22.00A.

Kraig, Harry J.: *See*—
Jones, W. Richard; and Kraig, Harry J., 4,063,336, Cl. 24-277.000.

Krajcrova, Marie: *See*—
Semonsky, Miroslav; Cerny, Antonin; Krajcrova, Marie; Rezabeck, Karel; Auskova, Marie; Seda, Miroslav; Sevcik, Bohumil; and Kral, Josef, 4,064,130, Cl. 260-285.500.

Kral, Josef: *See*—
Semonsky, Miroslav; Cerny, Antonin; Krajcrova, Marie; Rezabeck, Karel; Auskova, Marie; Seda, Miroslav; Sevcik, Bohumil; and Kral, Josef, 4,064,130, Cl. 260-285.500.

Kral, Rudolf, to Kraftwerk Union Aktiengesellschaft. Coal-fired steam generator with heating surfaces above the firing or combustion chamber. 4,063,534, Cl. 122-510.000.

Kral, Rudolf: *See*—
Wittchow, Eberhard; and Kral, Rudolf, 4,063,522, Cl. 110-22.00A.

Krapcho, John; and Turk, Chester F., to E. R. Squibb & Sons, Inc. 3,3-Dichloro-2-azetidinone derivatives having antiinflammatory activity. 4,064,120, Cl. 260-239.00A.

Krapcho, John, to E. R. Squibb and Sons, Inc. Substituted amides having antiinflammatory activity. 4,064,125, Cl. 260-258.000.

Krasnov, Alexandr Petrovich: *See*—
Korshak, Vasily Vladimirovich; Gribova, Irina Alexandrovna; Krasnov, Alexandr Petrovich; Teplyakov, Mikhail Mikhailovich; Elerdashvili, Georgy Vasilievich; Gureeva, Galina Ilinichna; Chebotarev, Valery Panteleimonovich; Dvorikova, Raisa Alexeevna; Sergeev, Vladimir Alexandrovich; and Kakauridze, Dali Mitrofanovna, 4,064,097, Cl. 260-37.00R.

Kreibich, Ursula: *See*—
Schmid, Rolf; and Kreibich, Ursula, 4,063,546, Cl. 126-271.000.

Kreisl, Walter, to Karl Schmidt GmbH. Signalling arrangement for automotive vehicle steering wheels. 4,063,789, Cl. 339-3.00S.

Krense, Horst; and Dobrusskin, Alexander, to Patent-Treuhand-Gesellschaft fur Elektrische Gluhlampen mbH. Starting and operating device for a high pressure discharge lamp. 4,064,416, Cl. 315-261.000.

Krenzer, John, to Velsicol Chemical Corporation. New thiadiazolylimidazolidinone ester. 4,063,924, Cl. 71-90.000.

Kress, Edward S.; Medley, Jackson C.; and Pinter, Merrill E. Slag pot carrier. 4,063,658, Cl. 214-314.000.

Krishnaswami, Calidas S.: *See*—
Nyiri, Laszlo K.; Toth, Gizella M.; Parmenter, Douglass V.; and Krishnaswami, Calidas S., 4,064,015, Cl. 195-108.000.

Kristinsson, Haukur: *See*—
Loew, Peter; Schwander, Hansrudolf; and Kristinsson, Haukur, 4,064,136, Cl. 260-304.00C.

Kristoffersen, Bjorn Roar: *See*—
Carolan, Raymond Jerome; and Kristoffersen, Bjorn Roar, 4,063,315, Cl. 4-10.000.

Krohm, Reinhold: *See*—
Bahre, Karl; and Krohm, Reinhold, 4,063,782, Cl. 299-34.000.

Krohn, Holger, to Indramat-Gesellschaft fur Industrie-Rationalisierung und Automatisierung. Duplicating method and arrangement. 4,064,446, Cl. 318-578.000.

Kroy Industries, Inc.: *See*—
Junge, Rodney G., 4,063,324, Cl. 15-100.000.

Kruppa, Richard F.; and Coleman, Arthur Edward, to Applied Science Laboratories, Inc.; and Silar Laboratories, Inc. High temperature polar stationary liquid phase for gas chromatography. 4,063,911, Cl. 55-67.000.

Kruseman, Jan, to Societe d'Assistance Technique pour Produits Nestle S.A. Soluble soy protein. 4,064,119, Cl. 260-123.500.

Krzes, Casey S. Power tool safety mechanism. 4,063,600, Cl. 173-12.000.

Kuehn, Harold H.; and Mittmann, Peter M., to Philip Morris Industrial Incorporated. Two-side legible packaging film and package made therefrom. 4,063,641, Cl. 206-484.000.

Kuhne, Manfred: *See*—
Hubele, Adolf; and Kuhne, Manfred, 4,063,921, Cl. 71-76.000.
Huff, Roger K.; Gallay, Jean Jacques; and Kuhne, Manfred, 4,064,243, Cl. 424-248.500.

Kuijer, William Lodewijk; Sygall, Peter Ivan; and Wennekes, Paulus Johannes, to U.S. Philips Corporation. Spray-coating method of window forming in tubular lamp. 4,064,291, Cl. 427-106.000.

Kumata, Kiyoshi, to Sharp Kabushiki Kaisha. Low voltage compensator for power supply in a complementary MOS transistor crystal oscillator circuit. 4,064,468, Cl. 331-116.00R.

Kunii, Youichi: *See*—
Yanaihara, Noboru; Igarashi, Toshiji; and Kunii, Youichi, 4,064,235, Cl. 424-177.000.

Kunin, Robert, to Rohm and Haas Company. Purification of blood using partially pyrolyzed polymer particles. 4,064,042, Cl. 210-40.000.

Kunz, Harold Russell: *See*—
Bushnell, Calvin L.; and Kunz, Harold Russell, 4,064,322, Cl. 429-41.000.

Kupfer, Hanspeter, to Siemens-Albis Aktiengesellschaft. Semiconductor-oscillator employing logic circuitry having at least one active element. 4,064,467, Cl. 331-108.00D.

Kuramochi, Kojiro; Watanabe, Kazuaki; and Onuma, Kiyoshi, to Toyota Jidosha Kogyo Kabushiki Kaisha. Change-speed gear system for use in automatic transmissions. 4,063,468, Cl. 74-763.000.

Kuroda, Hidemi: *See*—
Sakaki, Hiroshi; Shintani, Sotokichi; and Kuroda, Hidemi, 4,064,397, Cl. 364-724.000.

Kuroda, Nobuyuki; Nakamura, Toru; Shiraishi, Takeichi; Matsuura, Kazuo; and Miyoshi, Mituji, to Nippon Oil Company Ltd. Process for preparing polyolefins. 4,064,334, Cl. 526-119.000.

Kuroiwa, Hiroyuki: *See*—
Takagi, Atsushi; Kuroiwa, Hiroyuki; Miyaguchi, Masao; Kawamura, Tateo; and Ishikawa, Yoshihiro, 4,063,424, Cl. 61-63.000.

Kusano, Shoji: *See*—
Sato, Zenichi; Shimizu, Fumio; Kusano, Shoji; Takagi, Keiichiro; and Imamiya, Yoji, 4,064,200, Cl. 260-979.000.

Kusner, Robert Ernest; and Muthig, Robert William, to Republic Steel Corporation. Preparation of weatherable ferrite agglomerate. 4,063,930, Cl. 75-3.000.

Kustka, George John; and Mueller, Kurt Hugo, to Bell Telephone Laboratories, Incorporated. Correlative timing recovery in digital data transmission systems. 4,064,361, Cl. 178-69.100.

Kutnyak, Thomas A.: *See*—
Choiniere, Alcide W.; Kutnyak, Thomas A.; and Dunn, George T., 4,063,988, Cl. 156-429.000.

Kutsch, Howard James: *See*—
Anolick, Colin; and Kutsch, Howard James, 4,063,713, Cl. 256-13.100.

Kwok, Munson A.: *See*—
Cross, Edward F.; Kwok, Munson A.; and Jonuska, Daniel C., 4,064,535, Cl. 358-113.000.

Kyts, Robert B., to Interlake, Inc. Heat-sealing strapping tool and temperature regulator therefor. 4,063,985, Cl. 156-359.000.

L. B. Holliday & Co. Limited: *See*—
Elliot, Alexander; Lee, John Gerald; and Lever, Brian, 4,063,877, Cl. 8-1.00A.

L. Lajoie Inc.: *See*—
Lajoie, Joseph Leopold, 4,064,307, Cl. 428-310.000.

Labat, Yves; and Boy, Aristide, to Produits Chimiques Du Bearn. Process for preparing alpha-amino-gamma-methylmercaptobutyronitrile. 4,064,159, Cl. 260-465.50R.

Labellarte, Rocco A., to Edward Hines Lumber Company. Truss fabricating machine. 4,063,498, Cl. 100-176.000.

Ladish Co.: *See*—
Zimmerly, Robert D., 4,064,052, Cl. 210-433.00M.

Lajoie, Joseph Leopold, to L. Lajoie Inc. Molding and coating compositions. 4,064,307, Cl. 428-310.000.

Lal, Joginder; and Sandstrom, Paul H., to Goodyear Tire & Rubber Company, The. Polymers of nonconjugated 1,4-dienes. 4,064,335, Cl. 526-128.000.

Lamb, Thomas J.: *See*—
Beningson, Robert M.; Beningson, Herbert E.; Menon, Narayanankutty V. P.; Nadkarni, Ravindra M.; Lamb, Thomas J.; Fox, Lee K.; and Keary, William V., 4,063,903, Cl. 44-2.000.

Lambert, Gerald G., to Rexnord Inc. Unloading apparatus having retractable cam wheel followers. 4,063,655, Cl. 214-62.00A.

Lambert, Gerald G., to Rexnord Inc. System and apparatus for moving and unloading articles. 4,063,656, Cl. 214-62.00A.

Lambiris, Sotiris, to General Electric Company. Universal burner. 4,063,872, Cl. 431-285.000.

Lampe, Donald Ross; and White, Marvin Hart, to Westinghouse Electric Corporation. CCD focal plane processor for moving target imaging. 4,064,533, Cl. 358-105.000.

Lampredi, Aurelio, to Fiat Societa Per Azioni. Combustion chambers, for diesel engines. 4,063,537, Cl. 123-32.00B.

La Mura, Joseph L. Fountain brush. 4,063,829, Cl. 401-101.000.

Lamy, Jacques Edouard, to C. G. DORIS (Compagnie Generale pour les Developpements Operationnels des Richesses Sous-marines. Laying of submarine pipes. 4,063,430, Cl. 61-113.000.

Landers, Richard D. Carburetor providing a uniformly atomized fuel-air mixture. 4,063,541, Cl. 123-139.0AW.

Landsman, Robert M., to LogEtronics, Inc. Method for making a printing plate from a porous substrate. 4,064,205, Cl. 264-25.000.

Langer, Alois: *See*—
Patton, Jesse T.; and Langer, Alois, 4,064,331, Cl. 429-221.000.

Langner, Jaroslav: *See*—
Koerner, Gotz; Schmidt, Gunter; Langner, Jaroslav; and Patzke, Hans-Jurgen, 4,064,057, Cl. 252-8.600.

Larlee, Howard A.: *See*—
Husband, Wallace T.; and Larlee, Howard A., 4,063,835, Cl. 403-252.000.

La Rose, Wally. Golf warm up net. 4,063,739, Cl. 273-181.00F.

Larson, Lory E.: *See*—
Downs, Dallas I.; Larson, Lory E.; and Schuler, Victor J., 4,064,048, Cl. 210-160.000.

Larson, Spencer Brian; and Salmonson, Duane Leroy, to Economics Laboratory, Inc. Powdered detergent dispenser. 4,063,663, Cl. 222-52.000.

Latasiewicz, Leonard; and Stultz, Peter Franklin, to Motorola, Inc. Chassis captivation arrangement for vibration attenuation. 4,063,788, Cl. 312-7.00R.

Latka, Herbert: *See*—
Alder, Wilfried; Huppertz, Josef; Latka, Herbert; and Sperling, Gerhard, 4,064,063, Cl. 252-135.000.

Laurel Bank Machine Co., Ltd.: *See*—
Kokubo, Eiichi; and Miyagawa, Tuyoshi, 4,064,391, Cl. 235-92.0SB.

Laurin, Bernard L., to American Optical Corporation. Abrasion and antifog-resistant optical element. 4,064,308, Cl. 428-410.000.

Lawson, David Francis: *See*—
Oberster, Arthur Eugene; and Lawson, David Francis, 4,064,095, Cl. 260-37.00R.

Layden, George K.: *See*—
DeCrescente, Michael A.; Layden, George K.; and Pike, Roscoe A., 4,064,207, Cl. 264-29.600.

Lazennec, Yvon: *See*—
Desplanches, Gerard; Lazennec, Yvon; and Leboucq, Jacques, 4,064,209, Cl. 264-61.000.

Lazorisak, Nicholas W.; Christiansen, Fredric A.; and Harriz, John M., to Scott Paper Company. Creping process using two-position adhesive application. 4,064,213, Cl. 264-134.000.

Leach Corporation: *See*—
Schuessler, John C.; Nelsen, Marvin G.; and Tapp, David J., 4,064,471, Cl. 335-229.000.

Leary, Bruce: *See*—
Gibson, David Vincent; and Leary, Bruce, 4,064,090, Cl. 260-29.40R.

Leary, David F.; Cooper, Roy G.; and Miertschin, Gary N., to General Atomic Company. Manufacture of nuclear fuel compacts. 4,064,204, Cl. 264-.500.

Leavens, Dwight Earl; and Phillips, Claude Frank, Jr., to Sylvachem Corporation. Recovery of fatty acids from tall oil heads. 4,064,117, Cl. 260-97.600.

Lebedeva, Valentina Ivanovna: *See*—
Smirnov, Viktor Sergeevich; Gryaznov, Vladimir Mikhailovich; Lebedeva, Valentina Ivanovna; Mischenko, Alexandr Petrovich; Polyakova, Victoria Petrovna; and Savitsky, Evgeny Mikhailovich, 4,064,188, Cl. 260-672.00R.

Leboucq, Jacques: *See*—
Desplanches, Gerard; Lazennec, Yvon; and Leboucq, Jacques, 4,064,209, Cl. 264-61.000.

Leder, Erich O. Security sliding door system. 4,063,389, Cl. 49-370.000.

Lee, John Gerald: *See*—
Elliot, Alexander; Lee, John Gerald; and Lever, Brian, 4,063,877, Cl. 8-1.00A.

Lee, Minyoung; Szala, Lawrence E.; and Hibbs, Louis E., Jr., to General Electric Company. Modifying the surface of diamond particles. 4,063,907, Cl. 51-295.000.

Lee, Robert W., to Sperry Rand Corporation. Tier pattern sequence activation means. 4,063,652, Cl. 214-6.00B.

Lee, Rupert Archibald, to Texas Gas Transmission Corporation. Method for radiation production of fuels. 4,064,024, Cl. 204-157.10R.

Leeb, Dietmar: *See*—
Siegwart, Hans Rudolf; and Leeb, Dietmar, 4,064,319, Cl. 428-602.000.

Le Fur, Gerard Roger: *See—*
Champseix, Alain Andre; Gueremy, Claude Georges Alexandre; and Le Fur, Gerard Roger, 4,064,255, Cl. 424-267.000.
Leggett & Platt, Incorporated: *See—*
Bustos, Rafael T., 4,063,518, Cl. 108-6.000.
Le Guen, Benoit: *See—*
Reymond, Jean-Claude; d'Auria, Luigi; Le Guen, Benoit; and Rousseil, Gilbert, 4,063,343, Cl. 29-427.000.
Leidich, Arthur John, to RCA Corporation. Amplifier circuit. 4,064,463, Cl. 330-257.000.
Leimkuhler, Jurgen: *See—*
Kleeberg, Ulrich; Leimkuhler, Jurgen; Knospe, Jurgen; and Stohr, Manfred, 4,064,212, Cl. 264-117.000.
Leis, Hans, to Messerschmitt-Bolkow-Blohm Gesellschaft mit beschrankter Haftung. Method for the separation of segregations and impurities from material mixtures by centrifuging and equipment for the execution of the method. 4,063,721, Cl. 266-204.000.
Leland Stanford Junior University, The Board of Trustees of: *See—*
Johnson, William S.; and Dubois, Grant E., 4,064,185, Cl. 260-617.00R.
Powell, John David; Hubbard, Mont; and Clappier, Robert R., 4,063,538, Cl. 123-117.00R.
Lemaire, Gilbert: *See—*
Dekeister, Roger; Lemaire, Gilbert; and Marzys, Daniel, 4,064,033, Cl. 204-275.000.
Lemin, Norman Phillip. Wire reel device. 4,063,694, Cl. 242-85.000.
Lenk, Gerhard: *See—*
Schmidt, Oskar; Grunner, Erich; Tompich, Horst; Lenk, Gerhard; and Drum, Adam, 4,063,861, Cl. 425-542.000.
Leo, Gerry. Betting tray. 4,063,680, Cl. 232-1.00D.
Leonard, Guy W.; and Austin, Carl F., to United States of America, Navy. Device for stimulation of geothermal wells. 4,063,509, Cl. 102-20.000.
Leone International Sales Corporation: *See—*
Chen, Tung Chang; and Chen, Thomas M., 4,064,534, Cl. 358-107.000.
Lepere, Didier, to Instruments S.A. Monochromator having a toroidal holographic diffraction grating and utilizable in the ultraviolet band. 4,063,818, Cl. 356-100.000.
Lepetit, Marc; Angelle, Philippe; Bodin, Jacques; and du Boisbaudry, Dominique, to Societe d'Etudes, Recherches et Constructions Electroniques - SERCEL. Digital coding of angles. 4,064,504, Cl. 340-347.00P.
Lerner, Lawrence Robert: *See—*
Gerson, Herman; Santimauro, John Francis; and Lerner, Lawrence Robert, 4,064,129, Cl. 260-279.0QA.
Leroy, Jean Pierre: *See—*
Maisch, Wolfgang; Burkel, Rainer; Leroy, Jean Pierre; and Bonin, Andre, 4,064,482, Cl. 340-58.000.
Lesek, Arthur, to H. W. Stark Co., Inc. Shipping carton erector and holder. 4,063,492, Cl. 93-49.00R.
LeVantine, Allan D., to Cavitron Corporation. Coaxial ophthalmoscope arrangement. 4,063,806, Cl. 351-9.000.
Lever, Brian: *See—*
Elliot, Alexander; Lee, John Gerald; and Lever, Brian, 4,063,877, Cl. 8-1.00A.
Lewiner, Jacques; and Dreyfus, Gerard, to Agence Nationale de Valorisation de la Recherche. Device for measuring quantities of electric charges or similar electric parameters. 4,064,539, Cl. 358-128.000.
Lewis, Brian; Unger, Stefan H.; and Untch, Karl G., to Syntex (U.S.A.) Inc. Thiazole cardiovascular agents. 4,064,258, Cl. 424-270.000.
Lewis, Brian: *See—*
Berkoz, Belig M.; Lewis, Brian; and Muchowski, Joseph M., 4,064,135, Cl. 260-302.00S.
Berkoz, Belig M.; Lewis, Brian; and Unger, Stefan H., 4,064,257, Cl. 424-270.000.
Berkoz, Belig M.; Lewis, Brian; and Unger, Stefan H., 4,064,259, Cl. 424-270.000.
Lewis, Sheldon N.; and Haggard, Richard A., to Rohm and Haas Company. Polymers having pendant acrylate and methacrylate functionality. 4,064,161, Cl. 526-320.000.
Leyde, Warren L., to Pacific Technology, Inc. Digital load control circuit and method for power monitoring and limiting system. 4,064,485, Cl. 340-147.00R.
Li, Norman N.: *See—*
Singhal, Gopal H.; Gorbaty, Martin L.; Minday, Richard M.; and Li, Norman N., 4,064,040, Cl. 210-22.00R.
Lichtenstein, Bernard: *See—*
Beretsky, Irwin; and Lichtenstein, Bernard, 4,063,549, Cl. 128-2.00V.
Lie, Ole Hannibal: *See—*
Conradsen, Arne; and Lie, Ole Hannibal, 4,064,276, Cl. 426-69.000.
Life Savers, Inc.: *See—*
Mackay, Donald A. M.; Clark, K. Warren; Witzel, Frank; and Schoenholz, Daniel, 4,064,274, Cl. 426-3.000.
Lifeline Systems, Inc.: *See—*
Dibner, Andrew S., 4,064,368, Cl. 179-5.00R.
Liggett Group Inc.: *See—*
Hall, Floyd Vanmeda, 4,063,494, Cl. 93-77.0FT.
Hall, Floyd Vanmeda, 4,063,633, Cl. 198-455.000.
Light, Kenneth K.; Vock, Manfred Hugo; Shuster, Edward J.; and Schmitt, Frederick Louis, to International Flavors & Fragrances Inc. Norbornanol derivatives. 4,064,184, Cl. 260-617.00R.
Lightfoot, Richard, to Northern Telecom Limited. Apparatus for insertion and withdrawal of printed circuit boards into and from mounting frames. 4,064,551, Cl. 361-399.000.
Lilly, Rodger H., to Welding Institute, The. Friction welding methods and apparatus. 4,063,676, Cl. 228-114.000.
Lin, Luke C.: *See—*
Thettu, Raghulinga Reddy; and Lin, Luke C., 4,063,530, Cl. 118-60.000.
Lind, Erwin, to Hoechst Aktiengesellschaft. Material for electrophotographic reproduction. 4,063,948, Cl. 96-1.600.
Lineback, Lynn David: *See—*
Edgell, James Ensign; Lineback, Lynn David; and Paul, Richard Nelson, 4,064,447, Cl. 320-2.000.
Lion Fat and Oil Co., Ltd.: *See—*
Saika, Daini; Yanagawa, Takuma; Mizuta, Masaaki; and Kadoya, Isamu, 4,064,342, Cl. 536-59.000.
Lipson, Melvin A.; Knoth, Dale W.; Custer, Walter D.; and Gilano, Michael N., to Dynachem Corporation. Process for treating selected areas of a surface with solder. 4,064,287, Cl. 427-53.000.
Litser, John Fraser: *See—*
Pinede, Edouard; and Litser, John Fraser, 4,064,373, Cl. 179-99.000.
Little, Benjamin F., to Roto-Swing, Inc. Sliding door. 4,063,388, Cl. 49-363.000.
Litton Business Telephone Systems, Inc.: *See—*
Hoehn, Steven Jon, 4,064,371, Cl. 179-18.0FF.
Lizak, John F. Splash shield assembly for paint roller. 4,063,325, Cl. 15-230.110.
Loda, Antonio Guillermo. Total wrist joint prosthesis. 4,063,314, Cl. 3-1.910.
Lodge, James Alec, to EMI Limited. Slip-ring connection. 4,063,792, Cl. 339-5.00L.
Loehman, Ronald E.: *See—*
Going, Robert E.; Loehman, Ronald E.; and Chan, Ming Sam, 4,063,552, Cl. 128-136.000.
Loew, Peter; Schwander, Hansrudolf; and Kristinsson, Haukur, to Ciba-Geigy AG. Process for the manufacture of benzoxazole, benzthiazole and benzimidazole derivatives. 4,064,136, Cl. 260-304.00C.
Loewy Robertson Engineering Company Limited: *See—*
Harlow, Robert James, 4,063,363, Cl. 33-182.000.
LogEtronics, Inc.: *See—*
Landsman, Robert M., 4,064,205, Cl. 264-25.000.
London, Arnold, to Motorola, Inc. High-voltage bipolar transistor for integrated circuits. 4,064,523, Cl. 357-20.000.
Long, John W.; Flora, Barney S.; and Ford, Kenneth L., to Exxon Nuclear Company, Inc. Assembly mechanism for nuclear fuel bundles. 4,064,004, Cl. 176-78.000.
Lonza, Ltd.: *See—*
Herkenrath, Erik, 4,064,131, Cl. 260-287.00K.
Jackson, Barry, 4,064,126, Cl. 260-260.000.
Lore, Albert L., to Du Pont de Nemours, E. I., and Company. Fluorosurfactant leveling agent. 4,064,067, Cl. 252-355.000.
Lorenzen, Heinz-Christen, to Hauni-Werke Korber & Co., KG. Method and apparatus for building a tobacco filler. 4,063,563, Cl. 131-21.00D.
Lorkin, Clive Graham: *See—*
Schiffarth, Josef; Lorkin, Clive Graham; and Fletcher, Kenneth John, 4,063,931, Cl. 75-10.00R.
Lorthiois, Thierry Antoine, to Pont-A-Mousson S.A. Butterfly valve. 4,063,709, Cl. 251-173.000.
Lotte, Andre, to Societe Alsacienne de Mecaniques de Mulhouse. Adjustable modular rotary screen mount. 4,063,501, Cl. 101-128.100.
Louis M. Gerson Co., Inc.: *See—*
Gerson, Ronald L.; and Caprio, Lawrence A., 4,064,053, Cl. 210-497.0FB.
Lucas Industries Limited: *See—*
Seilly, Alec Harry, 4,064,473, Cl. 336-83.000.
Lucerne Products, Inc.: *See—*
Matthews, Benjamin H., 4,064,380, Cl. 200-16.00C.
Lundgren, Bengt G. S., to SKF Nova AB. Metal flake product suited for the production of metal powder for powder metallurgical purposes, and a process for manufacturing the product. 4,063,942, Cl. 75-251.000.
Lupton, Mary: *See—*
Smith, David L.; Frank, Cary; Lupton, Mary; and Lupton, Stephanie, 4,063,319, Cl. 5-334.00R.
Lupton, Stephanie: *See—*
Smith, David L.; Frank, Cary; Lupton, Mary; and Lupton, Stephanie, 4,063,319, Cl. 5-334.00R.
Lurbiecki, Manfred A. Concrete block forming and facing machine. 4,063,866, Cl. 425-517.000.
Luscombe, Arthur J. Vehicle mounted boom apparatus. 4,063,359, Cl. 30-379.500.
Lyle, Leo R.: *See—*
Brown, James L.; and Lyle, Leo R., 4,064,227, Cl. 424-1.000.
Lynes, Inc.: *See—*
Coone, Malcolm G.; and Hoffman, Erwin E., 4,063,421, Cl. 61-102.000.
Hoffman, Erwin E., 4,063,427, Cl. 61-100.000.
Lyons, Prentice Coleman, to General Electric Company. Voltage controlled electronic filter. 4,063,450, Cl. 73-579.000.
M I Systems, Inc.: *See—*
Bevilacqua, Albert, 4,063,352, Cl. 29-630.00R.
M & T Chemicals Inc.: *See—*
Eppensteiner, Frederick Walter; and Woehrle, R. E., 4,064,034, Cl. 204-286.000.
Russell, David B., 4,064,338, Cl. 526-230.000.

MacGregor, Robert D.: *See—*
Scotchmer, Stephen R.; and MacGregor, Robert D., 4,064,306, Cl. 428-255.000.
MacIntyre, Robert W.; and Wysocki, Edward J. Remotely actuatable device for rotary knob. 4,063,472, Cl. 81-3.00R.
Mackay, Donald A. M.; Clark, K. Warren; Witzel, Frank; and Schoenholz, Daniel, to Life Savers, Inc. Long-lasting flavored chewing gum including chalk-free gum base. 4,064,274, Cl. 426-3.000.
MacKay, John A.; and Gilkey, George M., to Gulf & Western Manufacturing Company. Ignition distributor breaker contact point set having grounding straps disposed between capacitor and contact terminal. 4,064,382, Cl. 200-19.00R.
MacMillan, Charles W. Turning radius plates and scales for automotive wheel alignment measurements. 4,063,364, Cl. 33-203.140.
MacNeill, Arden B., to MacNeill Engineering Company. Golf spike. 4,063,372, Cl. 36-127.000.
MacNeill Engineering Company: *See—*
MacNeill, Arden B., 4,063,372, Cl. 36-127.000.
MacPhedran, Donald Alexander: *See—*
Adams, Guy Emery; and MacPhedran, Donald Alexander, 4,064,474, Cl. 336-139.000.
Macrander, Max S., to GTE Automatic Electric Laboratories Incorporated. Direct current compensation circuit for transformers. 4,064,449, Cl. 323-48.000.
Mader, Robert J. Cap attachment device for golf training. 4,063,740, Cl. 273-183.00B.
Maehara, Mitsuhiro: *See—*
Murai, Hiromu; Ohata, Katsuya; Enomoto, Hiroshi; Chokai, Shoichi; Maehara, Mitsuhiro; Saito, Katsuhide; and Ozaki, Takayuki, 4,064,252, Cl. 424-266.000.
Magde, John M.: *See—*
Von Hoene, Donald C.; and Magde, John M., 4,063,943, Cl. 96-1.00R.
Magi-Cloth, Inc.: *See—*
Henry, James M., 4,064,061, Cl. 252-91.000.
Magnetfabrik Bonn G.m.b.H. vormals Gewerkschaft Windhorst: *See—*
Steingroever, Erich, 4,063,970, Cl. 148-103.000.
Mago nee Karacsony, Erzsebet; Borsi, Jozsef; Csanyi, Endre; Pik, Katalin; and Wolf, Lajos, to Richter Gedeon Vegyeszeti Gyar Rt. Compounds with ergoline skeleton. 4,064,249, Cl. 424-261.000.
Maier, Franz; and Peichl, Robert, to Sud-Chemie AG. Process for the production of concentrated sulfuric acid and/or oleum from a wet sulfur dioxide feed. 4,064,223, Cl. 423-522.000.
Mailliet, Pierre H., to S.A. des Anciens Etablissements Paul Wurth. Ejector piston. 4,063,722, Cl. 266-273.000.
Mailloux, Louis D., to Xerox Corporation. Color transparency reproducing machine. 4,063,810, Cl. 355-4.000.
Maisch, Wolfgang; Burkel, Rainer; Leroy, Jean Pierre; and Bonin, Andre, to Robert Bosch G.m.b.H. Vehicle tire pressure supervisory system. 4,064,482, Cl. 340-58.000.
Maitani, Yoshihisa; Shimoyama, Kunio; Yoshida, Muneaki; Hashimoto, Akihiko; and Kitagawa, Masahiro, to Olympus Optical Co., Ltd. Photometric apparatus for single lens reflex camera. 4,064,517, Cl. 354-51.000.
Makinson, Ruth G. Anti-hydroplaning device. 4,063,606, Cl. 180-1.00R.
Makishima, Tokuo: *See—*
Ueno, Hiroshi; Inaba, Naomi; Makishima, Tokuo; and Wada, Shozo, 4,064,069, Cl. 252-429.00B.
Maller, Robert R.: *See—*
Hoffman, Kenneth G.; Maller, Robert R.; and Messler, Robert W., Jr., 4,063,644, Cl. 209-111.600.
Mallinckrodt, Inc.: *See—*
Brown, James L.; and Lyle, Leo R., 4,064,227, Cl. 424-1.000.
Mallory Batteries Ltd.: *See—*
Naylor, Denis, 4,064,329, Cl. 429-174.000.
Malm, Robert Edward, to Northrop Corporation. Vocoder systems providing wave form analysis and synthesis using fourier transform representative signals. 4,064,363, Cl. 179-1.0SA.
Malsberger, Robert F.: *See—*
Borsuk, Leslie M.; Anderson, Randall H.; Grimsby, Emerson A.; and Malsberger, Robert F., 4,063,351, Cl. 29-629.000.
Mammino, Joseph, to Xerox Corporation. Electrophotographic decalcomanias. 4,064,285, Cl. 427-24.000.
Manassen, Joost; Hodes, Gary; and Cahen, David Ferdinand, to Yeda Research & Development Co. Ltd. Photo-electrochemical cell containing chalcogenide redox couple and having storage capability. 4,064,326, Cl. 429-111.000.
Mandel, Alan F.; Kirsch, Andrew F.; and Eichler, Kenneth M., to Westinghouse Electric Corporation. Elevator system. 4,063,620, Cl. 187-29.00R.
Manfanovsky, Serge, to Raytheon Company. Clutter subtraction system. 4,064,511, Cl. 343-7.00A.
Mann, Joseph K., to Varian Associates, Inc. Electron beam evaporator having beam spot control. 4,064,352, Cl. 13-31.000.
Manned Systems Sciences, Inc.: *See—*
McFarland, Robert L.; and Bradshaw, Stephen C., 4,063,368, Cl. 35-25.000.
Manthiram, Chockalingam: *See—*
Roggenstein, Edwin O.; and Manthiram, Chockalingam, 4,064,388, Cl. 235-61.00A.
Mar-Pha Societe d'Etudes et d'Exploitation de Marques: *See—*
Champseix, Alain Andre; Gueremy, Claude Georges Alexandre; and Le Fur, Gerard Roger, 4,064,255, Cl. 424-267.000.
Marden, Danny Alden. Headholder assembly. 4,064,401, Cl. 250-456.000.
Mares, Trinidad; Arthur, Jett C., Jr.; and Harris, James A., to United States of America, Agriculture. Single-treatment radiation process for imparting durable soil-release properties to cotton and cotton-polyester blend fabrics. 4,063,885, Cl. 8-115.700.
Marier, Gaston. Connector structure. 4,063,422, Cl. 61-53.000.
Mark, Victor, to General Electric Company. Flame retardant polycarbonate composition. 4,064,101, Cl. 260-45.85H.
Markwitz, Wernhard; and Dumichen, Volker, to Siemens Aktiengesellschaft. Method of automatically testing the serviceability of a data transmission system. 4,064,459, Cl. 325-67.000.
Marler, Norman O., Jr.; and Mikulis, Benjamin M., Jr., to Sander Associates, Inc. Soldered joint. 4,064,356, Cl. 174-68.500.
Marquis, Edward T., to Texaco Development Corporation. Preparation of methylene-bridged polyarylpolyamine mixtures. 4,064,170, Cl. 260-570.00D.
Marshall, Robert: *See—*
Kouchich, Allan V.; and Marshall, Robert, 4,064,475, Cl. 338-20.000.
Martignoni, Pasquale: *See—*
Chew, William M.; Ayers, Orval E.; Murfree, James A.; and Martignoni, Pasquale, 4,064,225, Cl. 423-648.00R.
Martin, Charles Andrew: *See—*
Klisch, Stephen Cajetan; and Martin, Charles Andrew, 4,064,076, Cl. 252-542.000.
Martin, Claude; and Martin, Real. Tent peg. 4,063,567, Cl. 135-15.0PE.
Martin, John C.: *See—*
Martin, Paul H.; and Martin, John C., 4,063,779, Cl. 298-22.00P.
Martin, Paul H.; and Martin, John C., to Diesel Equipment Limited. Dump truck load transfer device. 4,063,779, Cl. 298-22.00P.
Martin, Real: *See—*
Martin, Claude; and Martin, Real, 4,063,567, Cl. 135-15.0PE.
Martin, Robert P., Sr. Method and apparatus for forming tubes. 4,063,442, Cl. 72-166.000.
Martin, Ronald T., to Formac International, Inc. Anti-friction composite with metal backing of rigid prongs and lubricant overlay. 4,064,299, Cl. 428-102.000.
Marubayashi, Toshiaki: *See—*
Saitoh, Seiichiroh; Kashiwagi, Masatoshi; and Marubayashi, Toshiaki, 4,064,098, Cl. 260-40.00R.
Marwood, Ronald Keith, to American Cyanamid Company. Direct dispensing packaging of surgical sutures. 4,063,638, Cl. 206-63.300.
Marx, Michael; and Kertesz, Denis John, to Syntex (U.S.A.) Inc. 21-Cyclic acetals of steroidal 21-aldehydes and methods of preparation. 4,064,240, Cl. 424-241.000.
Marzys, Daniel: *See—*
Dekeister, Roger; Lemaire, Gilbert; and Marzys, Daniel, 4,064,033, Cl. 204-275.000.
Masak, Raymond J., to United States of America, Air Force. Weight multiplier for use in an adapter processor. 4,064,422, Cl. 364-841.000.
Maschinenfabrik Schweiter AG: *See—*
Heckel, Rene, 4,063,635, Cl. 198-531.000.
Masclet, Jean, to Messier-Hispano, S. A. Landing gear for an aerodyne. 4,063,698, Cl. 244-102.00R.
Mashimo, Yukio; Sakurada, Nobuaki; Ito, Tadashi; Ito, Fumio; Shinoda, Nobuhiko; and Murakami, Hiroyashu, to Canon Kabushiki Kaisha. Analog to digital converter for a plurality of analog channels. 4,064,515, Cl. 354-23.00D.
Maslov, Vadim Nikolaevich: *See—*
Bochkarev, Ellin Petrovich; Maslov, Vadim Nikolaevich; Voronin, Nikolai Georgievich; Korobov, Oleg Evgenievich; and Gavrilin, Eduard Ivanovich, 4,063,529, Cl. 118-49.100.
Masson, Andre A., to Etablissements Pierre Angenieux. Lighting projector. 4,064,425, Cl. 362-33.000.
Masuda, Shunji; Oyama, Yoshinori; Tanaka, Hisao; Uchigasaki, Isao; and Sasaki, Takehisa, to Hitachi Chemical Company, Ltd. Method for conducting a vapor-liquid contact reaction semi-batchwise. 4,064,111, Cl. 260-75.00M.
Mathison, Leslie C., to Honeywell, Inc. Bridge circuit with drift compensation. 4,063,447, Cl. 73-27.00R.
Matsui, Iwao; and Ebisu, Yoshimitsu, to Tokai Rika Denki Seisakusho K.K. Lock structure. 4,063,437, Cl. 70-358.000.
Matsui, Katsuhiko: *See—*
Kawaguchi, Toshiro; Fujii, Setuo; and Matsui, Katsuhiko, 4,063,483, Cl. 83-382.000.
Matsunaga, Tsutomu: *See—*
Halada, Jumei; Akiyoshi, Hiromi; and Matsunaga, Tsutomu, 4,064,215, Cl. 264-236.000.
Matsushima, Yasunobu; Tanaka, Shigeo; and Niizuma, Akira, to Oxy Metal Industries Corporation. Formation of nickel phosphate coatings on iron or steel. 4,063,968, Cl. 148-6.15R.
Matsushita Electric Industrial Co., Ltd.: *See—*
Kano, Gota; Tsuda, Naoyuki; and Iwasa, Hitoo, 4,064,525, Cl. 357-42.000.
Kawamata, Takashi; Inoue, Tsuneo; and Hirota, Eiichi, 4,064,224, Cl. 423-598.000.
Yoshino, Hironori; and Sato, Kohei, 4,064,454, Cl. 324-54.000.
Yuda, Jiro; Morokoshi, Hiroshi; Hori, Michimasa; Ikoma, Mitsuhiro; and Aizawa, Takeshi, 4,064,420, Cl. 318-224.00A.
Matsuura, Kazuo: *See—*
Kuroda, Nobuyuki; Nakamura, Toru; Shiraishi, Takeichi; Matsuura, Kazuo; and Miyoshi, Mituji, 4,064,334, Cl. 526-119.000.
Matsuura, Masaru: *See—*
Yokotsuka, Tamotsu; Asao, Yasuo; Matsuura, Masaru; and Hashimoto, Hikotaka, 4,064,277, Cl. 426-331.000.
Mattel, Inc.: *See—*
Washburn, Dean Becker; and Cleveland, Dale Paul, 4,063,402, Cl. 53-253.000.

Matthews, Benjamin H., to Lucerne Products, Inc. Movable contact carrier for an electrical control. 4,064,380, Cl. 200-16.00C.
Matthey, Hubert: *See—*
Huguenin, Raymond; Matthey, Hubert; and Voumard, Martial, 4,063,910, Cl. 51-413.000.
Matusch, Siegfried: *See—*
Dietzel, Walter; Matusch, Siegfried; and Hentschel, Volkmar, 4,063,959, Cl. 127-19.000.
Maupetit, Pierre; and Teisseire, Paul Jose, to Societe Anonyme Roure Bertrand Dupont. Epoxy alcohol tricyclic norsesquiterpene derivative and compositions containing the same. 4,064,060, Cl. 252-89.00R.
Maximovich, Michael J.: *See—*
Burroway, Gary L.; and Maximovich, Michael J., 4,064,092, Cl. 260-29.6PM.
Mayer, Hubert; and Schutte, Horst, to Gesellschaft fur Biotechnologische Forschung mbH. Process for producing ECoRI restriction endonuclease with *E.coli* mutants. 4,064,011, Cl. 195-65.000.
Mayer, Richard Eugene: *See—*
Schwartz, Judd Leonard; and Mayer, Richard Eugene, 4,064,298, Cl. 428-95.000.
McArthur, Dennis P., to Union Oil Company of California. Thermally stable nickel-alumina catalysts useful for methanation. 4,064,152, Cl. 260-449.60M.
McBride, Michael Eudell: *See—*
Bluethman, Robert Glenn; McBride, Michael Eudell; and Rogers, Wayne Finis, 4,064,557, Cl. 364-900.000.
McCallum, David F., to Raymond Lee Organization, Inc., The. Throw ring. 4,063,382, Cl. 46-74.00D.
McConnell, Christopher L. Preheater for clothes dryer. 4,063,590, Cl. 165-135.000.
McCoy, Robert H.; and White, Woodrow W., to Uniroyal, Inc. Emulsion polymerization in the presence of lignosulfonate salt. 4,064,081, Cl. 260-17.500.
McCreery, Howard J.: *See—*
Barkley, George G.; Cmar, John A., Jr.; and McCreery, Howard J., 4,063,843, Cl. 408-146.000.
McCullough, Timothy J. Fish-skinning tool. 4,063,332, Cl. 17-62.000.
McDermed, John D.; McKenzie, Gerald M.; and Phillips, Arthur P., to Burroughs Wellcome Co. Emetic tetralones and the use thereof for inducing regurgitation. 4,064,271, Cl. 424-330.000.
McEvers, Dale L.; and Struble, Daniel P., to H&H Industries, Inc. Rotary die cutting machine. 4,063,493, Cl. 93-58.20R.
McFarland, Robert L.; and Bradshaw, Stephen C., to Manned Systems Sciences, Inc. Laser weapons simulation system. 4,063,368, Cl. 35-25.000.
McIlwain, Irwin D., to Sperry Rand Corporation. Shock-isolated electric actuator for moving a harvesting machine header. 4,063,405, Cl. 56-208.000.
McKeighen, James F.: *See—*
Stephens, William W.; and McKeighen, James F., 4,063,719, Cl. 266-130.000.
McKenna, Roger DeSalvo, to Signal Companies, Inc., The. Direction control device for endotracheal tube. 4,063,561, Cl. 128-351.000.
McKenzie, Eugene L., to Minnesota Mining and Manufacturing Company. Weather-resistant transparent composite film. 4,064,314, Cl. 428-483.000.
McKenzie, Gerald M.: *See—*
McDermed, John D.; McKenzie, Gerald M.; and Phillips, Arthur P., 4,064,271, Cl. 424-330.000.
McLain, John David: *See—*
Howell, James Damron; Beck, Robert William; Bruce, George Hayden; and McLain, John David, 4,063,602, Cl. 175-7.000.
McLaughlin, Thomas D.; and Altman, Richard M., to Optigon Research & Development Corporation. Reflex camera light detecting arrangement. 4,064,516, Cl. 354-31.000.
McLean, John Walford; and Sced, Ian Robert, to National Research Development Corporation. Production of metal-ceramic articles. 4,064,311, Cl. 428-434.000.
McMahon, Matthew A., to Texaco Inc. Organic nitrogen-containing initiators for hydrocarbon conversion. 4,064,175, Cl. 260-586.00P.
McMullan, James P. Heater control unit. 4,064,387, Cl. 219-217.000.
McRobbie, Henry William, to Union Carbide Corporation. Methanation of overshifted feed. 4,064,156, Cl. 260-449.60M.
Mead Corporation, The: *See—*
Calvert, Rodney K., 4,063,771, Cl. 294-87.200.
Shackle, Dale Richard; and Young, Ainslie Thomas, Jr., 4,063,754, Cl. 282-27.500.
Mead Johnson & Company: *See—*
Dykstra, Stanley J.; and Minielli, Joseph L., 4,064,254, Cl. 424-267.000.
Medley, Jackson C.: *See—*
Kress, Edward S.; Medley, Jackson C.; and Pinter, Merrill E., 4,063,658, Cl. 214-314.000.
Meetze, Murray O'Neil, Jr., to Risdon Manufacturing Company, The. Device for indicating when automatic, periodic operation has emptied an aerosol container. 4,063,664, Cl. 222-70.000.
Mehta, Praful K. A.: *See—*
Gilmour, John B.; Mehta, Praful K. A.; Mirliss, Melvin J.; and Nielsen, Richard B., 4,064,071, Cl. 252-455.00R.
Meier, Joseph F., to Westinghouse Electric Corporation. Accelerated melamine-aldehyde resin and method of making a fast-curing laminate therewith. 4,064,089, Cl. 260-29.40R.
Meier, Werner: *See—*
Cassal, Jean-Marie; Furst, Andor; and Meier, Werner, 4,064,173, Cl. 260-586.00E.
Meilink Steel Safe Company, The: *See—*
Parsons, Kenneth A., 4,063,520, Cl. 109-66.000.
Meisenbach, William T.: *See—*
Adams, George R.; and Meisenbach, William T., 4,063,996, Cl. 162-210.000.
Menon, Narayanankutty V. P.: *See—*
Beningson, Robert M.; Beningson, Herbert E.; Menon, Narayanankutty V. P.; Nadkarni, Ravindra M.; Lamb, Thomas J.; Fox, Lee K.; and Keary, William V., 4,063,903, Cl. 44-2.000.
Merck & Co., Inc.: *See—*
Anderson, Paul S.; Christy, Marcia E.; and Ponticello, Gerald S., 4,064,139, Cl. 260-313.100.
Beattie, Thomas R.; and Christensen, Burton G., 4,064,344, Cl. 544-21.000.
Dorn, Conrad P.; and Yang, Shu S., 4,064,236, Cl. 424-177.000.
Mrozik, Helmut H., 4,064,239, Cl. 424-228.000.
Merck Patent Gesellschaft mit beschraenkter Haftung: *See—*
Halpaap, Herbert; Reich, Walter; and Ripphahn, Johannes, 4,064,041, Cl. 210-31.00C.
Mercury Metal Products: *See—*
Jones, W. Richard; and Kraig, Harry J., 4,063,336, Cl. 24-277.000.
Merger, Franz; Nestler, Gerhard; Oppenlaender, Knut; Uhl, Guenter; and Wissler, Ruediger, to BASF Aktiengesellschaft. Process for printing fibrous material. 4,064,309, Cl. 428-413.000.
Merritt, James A.; and Robertson, Lawrence C., to United States of America, Army. Removal of phosgene impurity from boron trichloride by laser radiation. 4,063,896, Cl. 23-254.00R.
Merten, Gerhard: *See—*
Georg, Werner; and Merten, Gerhard, 4,063,781, Cl. 299-34.000.
Merz, Gunther. Compensators or expansion joints. 4,063,755, Cl. 285-53.000.
Mese, Michihiro; Miyatake, Takafumi; Kashioka, Seiji; and Hamada, Toshimitsu, to Hitachi, Ltd. Analog-digital converter with variable threshold levels. 4,064,484, Cl. 340-146.3AG.
Mesinger, Robert H. Unitary cycle seat support unit. 4,063,775, Cl. 297-201.000.
Messerschmitt-Bolkow-Blohm Gesellschaft mit beschrankter Haftung: *See—*
Leis, Hans, 4,063,721, Cl. 266-204.000.
Messier-Hispano, S. A.: *See—*
Masclet, Jean, 4,063,698, Cl. 244-102.00R.
Messing, Terry Glen, to ESB Incorporated. Battery having venting wrapper comprising gas previous plastic layer and fractured gas impervious layer. 4,064,323, Cl. 429-86.000.
Messler, Robert W., Jr.: *See—*
Hoffman, Kenneth G.; Maller, Robert R.; and Messler, Robert W., Jr., 4,063,644, Cl. 209-111.600.
Mesta Machine Company: *See—*
Brashear, Joseph O., 4,063,440, Cl. 72-148.000.
Petros, Andrew J., 4,063,743, Cl. 277-63.000.
Meszaros, Csilla: *See—*
Toth, Edit; Torley, Jozsef; Palosi, Eva; Szeberenyi, Szaboles; Szporny, Laszlo; Gorog, Sandor; and Meszaros, Csilla, 4,064,121, Cl. 260-239.00B.
Metrolology General Corporation: *See—*
Cretzler, Donald J., 4,064,549, Cl. 361-283.000.
Metzeler Kautschuk AG: *See—*
Neumann, Henning; and Federer, Fritz, 4,063,320, Cl. 9-2.00A.
Meuret, Paul, to Constructions Navales et Industrielles de la Mediterranee. Bolted joint. 4,063,831, Cl. 403-28.000.
Meyer, Willi: *See—*
Ottenhues, Ludger; and Meyer, Willi, 4,063,504, Cl. 101-153.000.
Meyer, Willy: *See—*
Farooq, Saleem; Drabek, Jozef; Gsell, Laurenz; Karrer, Friedrich; and Meyer, Willy, 4,064,263, Cl. 424-285.000.
Meyers, Edward; Trejo, William H.; Pluscec, Josip; and Brown, William E., to E. R. Squibb & Sons, Inc. Process for preparing thiostrepton. 4,064,013, Cl. 195-80.00R.
Michael, Vesta F., to Fiber Glass Systems, Inc. Rod construction and method of forming the same. 4,063,838, Cl. 403-343.000.
Michalson, George M. Golf courses. 4,063,738, Cl. 273-176.00A.
Michel, Paul-Marie: *See—*
De Vos, Daniel; Michel, Paul-Marie; and Berger, Alfred, 4,063,916, Cl. 65-21.000.
Michels, Wolfgang: *See—*
Axer, Heinrich; Michels, Wolfgang; and Ufermann, Werner, 4,063,858, Cl. 425-81.000.
Micheron, Francois: *See—*
Huignard, Jean Pierre; Herriau, Jean Pierre; and Micheron, Francois, 4,063,795, Cl. 350-3.500.
Miertschin, Gary N.: *See—*
Leary, David F.; Cooper, Roy G.; and Miertschin, Gary N., 4,064,204, Cl. 264-.500.
Mikulas, Martin M., Jr.: *See—*
Rhodes, Marvin D.; and Mikulas, Martin M., Jr., 4,063,981, Cl. 156-245.000.
Mikulis, Benjamin M., Jr.: *See—*
Marler, Norman O., Jr.; and Mikulis, Benjamin M., Jr., 4,064,356, Cl. 174-68.500.
Militano, Vincent, to Finkel Outdoor Products, Inc. Furniture connecting means. 4,063,836, Cl. 403-263.000.
Milkowski, Wolfgang; Zeugner, Horst; von Eickstedt, Klaus-Wolf; and Stuhmer, Werner, to Kali-Chemie Aktiengesellschaft. N,[3-(4'-fluorobenzoyl)propyl]-N_2-(2'-chloro-5'-methylphenoxy)ethyl]piperazine. 4,064,128, Cl. 260-268.00R.

Miller, Frances C.: *See—*
Powers, John R.; and Miller, Frances C., 4,063,886, Cl. 8-127.000.
Miller, George T., to Hooker Chemicals & Plastics Corporation. Durably flame proofed textile materials. 4,063,884, Cl. 8-115.500.
Miller, Helmut, to Escher Wyss Limited. Rim-type hydroelectric machine. 4,064,403, Cl. 290-52.000.
Miller, Joyce Ann. Loom. 4,063,574, Cl. 139-29.000.
Miller, Norman, to Schwab Safe Co., Inc. Stronghold combination lock. 4,063,436, Cl. 70-133.000.
Millerioux, Bruno. Tent with portable disassemblable modular elements. 4,063,566, Cl. 135-1.00R.
Millevoi, Eugenio, to Weldotron Corporation. Continuous film sealing machine. 4,063,400, Cl. 53-180.00R.
Mills, James W.: *See—*
Howard, Lawrence F.; and Mills, James W., 4,063,961, Cl. 134-4.000.
Milne, George M., Jr.: *See—*
Hammen, Philip D.; and Milne, George M., Jr., 4,064,272, Cl. 424-330.000.
Minami, Toshimi; and Sioda, Hidematu, to Tomoe Technical Research Company. Reduction apparatus for opening and closing a valve. 4,063,710, Cl. 251-248.000.
Minday, Richard M.: *See—*
Singhal, Gopal H.; Gorbaty, Martin L.; Minday, Richard M.; and Li, Norman N., 4,064,040, Cl. 210-22.00R.
Minielli, Joseph L.: *See—*
Dykstra, Stanley J.; and Minielli, Joseph L., 4,064,254, Cl. 424-267.000.
Minnesota Mining and Manufacturing Company: *See—*
Bradshaw, Thomas Ian, 4,063,452, Cl. 73-73.000.
McKenzie, Eugene L., 4,064,314, Cl. 428-483.000.
Weeks, Bruce W., 4,063,878, Cl. 8-2.50A.
Minolta Camera Kabushiki Kaisha: *See—*
Seino, Kuniki; and Kondo, Shoji, 4,063,811, Cl. 355-15.000.
Minsk, Louis M.: *See—*
Kotlarchik, Carl, Jr.; Minsk, Louis M.; and Fletcher, George L., Jr., 4,064,168, Cl. 260-556.00A.
Mirliss, Melvin J.: *See—*
Gilmour, John B.; Mehta, Praful K. A.; Mirliss, Melvin J.; and Nielsen, Richard B., 4,064,071, Cl. 252-455.00R.
Mischenko, Alexandr Petrovich: *See—*
Smirnov, Viktor Sergeevich; Gryaznov, Vladimir Mikhailovich; Lebedeva, Valentina Ivanovna; Mischenko, Alexandr Petrovich; Polyakova, Victoria Petrovna; and Savitsky, Evgeny Mikhailovich, 4,064,188, Cl. 260-672.00R.
Mississippi Chemical Corporation: *See—*
Weston, Charles W., 4,063,920, Cl. 71-34.000.
Mita, Yasuhiro; Uchino, Minoru; and Sasaki, Masato, to Nissan Motor Company, Limited. Pellet type catalytic converter. 4,063,900, Cl. 23-288.00F.
Mitchell, Ernest H.: *See—*
Ebel, Julius Alex; and Mitchell, Ernest H., 4,064,290, Cl. 427-97.000.
Mitchell, H. Charles; and Fettes, Donald G. Backflow check valve. 4,063,570, Cl. 137-454.200.
Mitchell, Robert Dennis. Abrasive compact brazed to a backing. 4,063,909, Cl. 51-309.00R.
Mitchell, Thomas R. Hanging planter pot speaker enclosure. 4,063,387, Cl. 47-67.000.
Mitchell, Wallace F.; and Evans, Clifford A., to Ammco Tools, Inc. Brake service tool. 4,063,342, Cl. 29-227.000.
Mitsubishi Chemical Industries, Ltd.: *See—*
Fukutani, Hideo; Miura, Konoe; Takahashi, Yoshihiro; and Torige, Kazuo, 4,063,953, Cl. 96-115.00R.
Mitsubishi Jukogyo Kabushiki Kaisha: *See—*
Irie, Nobuhiko; and Katayama, Hideaki, 4,063,987, Cl. 156-417.000.
Yamashita, Yuzo; Kishi, Masahiro; and Ishibashi, Yasumasa, 4,064,219, Cl. 423-242.000.
Mitsui Petrochemical Industries Ltd.: *See—*
Saitoh, Seiichiroh; Kashiwagi, Masatoshi; and Marubayashi, Toshiaki, 4,064,098, Cl. 260-40.00R.
Mittmann, Peter M.: *See—*
Kuehn, Harold H.; and Mittmann, Peter M., 4,063,641, Cl. 206-484.000.
Miura, Konoe: *See—*
Fukutani, Hideo; Miura, Konoe; Takahashi, Yoshihiro; and Torige, Kazuo, 4,063,953, Cl. 96-115.00R.
Miwa, Kenji: *See—*
Itoi, Nobuo; Shimamura, Teruo; Fukami, Yoshio; Mori, Hidetoshi; and Miwa, Kenji, 4,063,816, Cl. 356-93.000.
Miyadera, Yasuo: *See—*
Yokoyama, Takashi; Miyadera, Yasuo; Shito, Nobuhiko; Suzuki, Hiroshi; and Wakashima, Yoshiaki, 4,064,289, Cl. 427-82.000.
Miyagawa, Tuyoshi: *See—*
Kokubo, Eiichi; and Miyagawa, Tuyoshi, 4,064,391, Cl. 235-92.0SB.
Miyaguchi, Masao: *See—*
Takagi, Atsushi; Kuroiwa, Hiroyuki; Miyaguchi, Masao; Kawamura, Tateo; and Ishikawa, Yoshihiro, 4,063,424, Cl. 61-63.000.
Miyahara, Michito: *See—*
Ogawa, Kazuki; Miyahara, Michito; and Furukawa, Mitsuhiko, 4,063,908, Cl. 51-307.000.
Miyano, Seiji; and Abe, Nobuhiro, to Takeda Chemical Industries, Ltd. Cyclohexenone derivatives. 4,064,133, Cl. 260-293.790.
Miyatake, Takafumi: *See—*
Mese, Michihiro; Miyatake, Takafumi; Kashioka, Seiji; and Hamada, Toshimitsu, 4,064,484, Cl. 340-146.3AG.
Miyazaki, Minematsu: *See—*
Fukuba, Kozo; and Miyazaki, Minematsu, 4,064,317, Cl. 428-537.000.
Miyosawa, Yoshiaki; and Umemoto, Sueo, to Kansai Paint Co., Ltd. Process for electrocoating. 4,064,028, Cl. 204-181.000.
Miyoshi, Mituji: *See—*
Kuroda, Nobuyuki; Nakamura, Toru; Shiraishi, Takeichi; Matsuura, Kazuo; and Miyoshi, Mituji, 4,064,334, Cl. 526-119.000.
Mizumoto, Shozo: *See—*
Kawasaki, Motoo; Mizumoto, Shozo; and Nawafune, Hidemi, 4,064,022, Cl. 204-105.00R.
Mizuta, Masaaki: *See—*
Saika, Daini; Yanagawa, Takuma; Mizuta, Masaaki; and Kadoya, Isamu, 4,064,342, Cl. 536-59.000.
MM Systems Corporation: *See—*
Attaway, Julian J., 4,063,396, Cl. 52-489.000.
Mobay Chemical Corporation: *See—*
Baron, Arthur L.; and Sivaramakrishnan, Parameswar, 4,064,195, Cl. 260-860.000.
Moberg, Sigurd M., to E. J. Brooks Company. Plunger-operated lock. 4,063,434, Cl. 70-34.000.
Mobil Oil Corporation: *See—*
Bivans, David A.; and Duncan, Gary L., 4,064,315, Cl. 428-518.000.
Graven, Richard G.; and Sailor, Robert A., 4,064,037, Cl. 208-120.000.
Henschel, Leonard, 4,064,082, Cl. 260-27.0EV.
Kaufman, Marvin L., 4,064,026, Cl. 204-159.190.
Penick, Joe E., 4,064,039, Cl. 208-160.000.
Ruehle, William H., 4,064,479, Cl. 340-7.00R.
Modesette, J. Harley. Air deflector. 4,063,773, Cl. 296-91.000.
Modianos, Doan D. Non-clogging, centrifugal, coaxial discharge pump. 4,063,849, Cl. 415-210.000.
Moji, Yukimori, to Boeing Company, The. Preparing an environmentally stable stainless surface for bonding. 4,064,020, Cl. 204-38.00E.
Moller, Heinz: *See—*
Gorille, Ingo; Borst, Wolfgang; Klotzner, Winfried; Ott, Karl; Moller, Heinz; Honig, Gunter; Kiencke, Uwe; Zechnall, Martin; Flaig, Ulrich; Schulz, Alfred; and Pagel, Ernst-Olav, 4,063,539, Cl. 123-117.00D.
Mongeon, Ronald W.: *See—*
Geiszler, Theodore D.; and Mongeon, Ronald W., 4,064,499, Cl. 340-258.00C.
Monsanto Company: *See—*
Dalton, William O.; and Hilton, Glenn B., 4,064,093, Cl. 260-29.7PT.
Gaertner, Van R.; and Hamm, Philip C., 4,063,922, Cl. 71-86.000.
Grano, Joseph, Jr., 4,063,919, Cl. 71-11.000.
Kellogg, Robert C., 4,064,210, Cl. 264-94.000.
Sidebotham, Norman C.; Shoemaker, Paul D.; and Young, Clarence W., III, 4,064,079, Cl. 260-2.300.
Mookherjee, Braja Dulal: *See—*
Withycombe, Donald Arthur; Hruza, Anne; Vock, Manfred Hugo; Giacino, Christopher; Mookherjee, Braja Dulal; Pittet, Alan Owen; and Schreiber, William L., 4,064,279, Cl. 426-535.000.
Moore, James Kenneth: *See—*
Kaiser, Arthur; Moore, James Kenneth; and Glenn, William E., Jr., 4,064,530, Cl. 358-36.000.
Morales, Michael John; and Reeves, George I., to Beckman Instruments, Inc. Engine scope tester calibrator. 4,064,450, Cl. 324-15.000.
Moreiras, Luis, to Weatherhead Company, The. Quick connect coupling. 4,063,760, Cl. 285-242.000.
Mori, Hideki: *See—*
Akai, Shin-ichi; Mori, Hideki; Shimoda, Takashi; and Iguchi, Shinichi, 4,063,972, Cl. 148-171.000.
Mori, Hidetoshi: *See—*
Itoi, Nobuo; Shimamura, Teruo; Fukami, Yoshio; Mori, Hidetoshi; and Miwa, Kenji, 4,063,816, Cl. 356-93.000.
Shimamura, Teruo; Fukami, Yoshio; and Mori, Hidetoshi, 4,063,817, Cl. 356-93.000.
Mori, Yoshio: *See—*
Mukai, Atsuhiko; and Mori, Yoshio, 4,063,828, Cl. 401-96.000.
Moriya, Takahiko: *See—*
Kirita, Kei; Tsuji, Yasutaka; and Moriya, Takahiko, 4,063,973, Cl. 148-188.000.
Morokoshi, Hiroshi: *See—*
Yuda, Jiro; Morokoshi, Hiroshi; Hori, Michimasa; Ikoma, Mitsuhiro; and Aizawa, Takeshi, 4,064,420, Cl. 318-224.00A.
Morris, Gilbert: *See—*
Dixon, Herbert; Heinrich, Walter; and Morris, Gilbert, 4,064,357, Cl. 174-68.500.
Morris, Wyndham: *See—*
Dewdney, Thomas Gordon; Dowden, Dennis Albert; and Morris, Wyndham, 4,064,172, Cl. 260-583.00K.
Morrow, Howard E.: *See—*
Hildebrand, Alfred P.; Morrow, Howard E.; and Jones, Henry W., 4,064,390, Cl. 235-470.000.
Morse, Alfred W., to Westinghouse Electric Corporation. Amplitude stabilized power amplifier. 4,064,464, Cl. 330-53.000.
Morse Shoe, Inc.: *See—*
Batra, Vijay, 4,063,371, Cl. 36-3.00B.
Morton-Norwich Products, Inc.: *See—*
Wright, George C.; and Butterfield, James L., 4,064,134, Cl. 260-295.0CA.

Motch & Merryweather Machinery Company, The: *See*—
Nowak, Robert H., 4,063,471, Cl. 76-112.000.
Motes, John M.: *See*—
Nafziger, John L.; and Motes, John M., 4,064,157, Cl. 260-453.0SP.
Motoren- und Turbinen-Union Munchen GmbH: *See*—
Hueber, Alfred; and Hagemeister, Klaus, 4,063,850, Cl. 415-214.000.
Motorola, Inc.: *See*—
Chapman, Ronald Howard, 4,064,488, Cl. 340-171.00R.
Davis, Walter Lee, 4,064,493, Cl. 365-96.000.
Gaicki, Stanley, 4,063,673, Cl. 228-1.00R.
Latasiewicz, Leonard; and Stultz, Peter Franklin, 4,063,788, Cl. 312-7.00R.
London, Arnold, 4,064,523, Cl. 357-20.000.
Mrowca, Joseph J., to Du Pont de Nemours, E. I., and Company. Phosphine oxide flame retardants. 4,064,104, Cl. 260-45.9NP.
Mrozik, Helmut H., to Merck & Co., Inc. Halogenated unsaturated alkyl benzenedisulfonamides as anthelmintics. 4,064,239, Cl. 424-228.000.
MTS Systems Corporation: *See*—
Gram, Martin M., 4,063,453, Cl. 73-103.000.
Muchowski, Joseph M.: *See*—
Berkoz, Belig M.; Lewis, Brian; and Muchowski, Joseph M., 4,064,135, Cl. 260-302.00S.
Mueller, Kurt Hugo: *See*—
Kustka, George John; and Mueller, Kurt Hugo, 4,064,361, Cl. 178-69.100.
Mueller-Tamm, Heinz: *See*—
Zeitler, Gerhard; Hoehr, Lothar; and Mueller-Tamm, Heinz, 4,064,198, Cl. 260-878.00R.
Mukai, Atsuhiko; and Mori, Yoshio, to Teijin Limited. Plastic pencils. 4,063,828, Cl. 401-96.000.
Mullen, John H.; and Dobrosielski, Stephen S., to Westinghouse Electric Corporation. Pushbutton switch assembly having floating type bridging contact and lost motion actuator. 4,064,381, Cl. 200-16.00A.
Muller, Karl: *See*—
Anderegg, Hans Rudolf; and Muller, Karl, 4,063,572, Cl. 137-862.000.
Munns, Murry W., Jr.: *See*—
Kelly, Vincent S.; and Munns, Murry W., Jr., 4,063,696, Cl. 242-125.100.
Murai, Hiromu; Ohata, Katsuya; Enomoto, Hiroshi; Chokai, Shoichi; Maehara, Mitsuhiro; Saito, Katsuhide; and Ozaki, Takayuki, to Nippon Shinyaku Co., Ltd. Substituted N-(carboxymethyl)-3-aminopropan-2-ol derivatives. 4,064,252, Cl. 424-266.000.
Murakami, Hiroyashu: *See*—
Mashimo, Yukio; Sakurada, Nobuaki; Ito, Tadashi; Ito, Fumio; Shinoda, Nobuhiko; and Murakami, Hiroyashu, 4,064,515, Cl. 354-23.00D.
Muranaka, Susumu, to Nippon Electric Company, Ltd. Electronic calculator having keyboard for entering data. 4,064,399, Cl. 364-709.000.
Murfree, James A.: *See*—
Chew, William M.; Ayers, Orval E.; Murfree, James A.; and Martignoni, Pasquale, 4,064,225, Cl. 423-648.00R.
Murphy, Donald E.; and Roby, Steven J., to Campbell Soup Company. Labeling machine feed apparatus. 4,063,989, Cl. 156-453.000.
Murphy, William L.: *See*—
Downing, James H.; Kaiser, Robert H.; Murphy, William L.; and Vaughn, William R., 4,063,932, Cl. 75-61.000.
Murrle, Kurt, to Pforzheimer Uhren-Rohwerke Rudolf Wehner. Stepping mechanism. 4,063,411, Cl. 58-125.00B.
Murrmann, Helmuth: *See*—
Graul, Jurgen; and Murrmann, Helmuth, 4,063,967, Cl. 148-1.500.
Mutchler, Paul, to American Air Filter Company, Inc. Combination towbar and parking stand. 4,063,750, Cl. 280-475.000.
Muthig, Robert William: *See*—
Kusner, Robert Ernest; and Muthig, Robert William, 4,063,930, Cl. 75-3.000.
Myer, Jon H., to Hughes Aircraft Company. Wavering conductor loops for magnetic domain memories. 4,064,496, Cl. 365-19.000.
Myers, Robert M.; Dunkelberger, David L.; and Carty, Daniel T., to Rohm and Haas Company. Vinyl halide polymer impact modifiers. 4,064,197, Cl. 260-876.00R.
Nadelson, Jeffrey, to Sandoz, Inc. Substituted hydroxy pyridones. 4,064,251, Cl. 424-263.000.
Nadkarni, Ravindra M.: *See*—
Beningson, Robert M.; Beningson, Herbert E.; Menon, Narayanankutty V. P.; Nadkarni, Ravindra M.; Lamb, Thomas J.; Fox, Lee K.; and Keary, William V., 4,063,903, Cl. 44-2.000.
Nafziger, John L.; and Motes, John M., to Dow Chemical Company, The. Stabilization of polyisocyanates against discoloration. 4,064,157, Cl. 260-453.0SP.
Nagamune, Yasuyuki: *See*—
Inohara, Shu; Nagamune, Yasuyuki; and Tanigaki, Bunjiro, 4,063,408, Cl. 57-58.540.
Nagase, Ikuo; and Sun, Park Hee, to Alloy Trading Co., Ltd. Aluminum alloy having high mechanical strength and elongation and resistant to stress corrosion crack. 4,063,936, Cl. 75-141.000.
Nagel, Arthur A., to Pfizer Inc. Oleandomycin derivatives. 4,064,143, Cl. 260-343.000.
Nagel, Robert H. Information retrieval system having selected purpose variable function terminal. 4,064,490, Cl. 364-200.000.
Naito, Susumu, to Rinnai Kabushiki Kaisha. Infrared gas burner plate. 4,063,873, Cl. 431-328.000.
Nakai, Junkichi; and Fukunaga, Kazuo, to Nitto Electric Industrial Co., Ltd. Process for surface treating molded articles of fluorine resins. 4,064,030, Cl. 204-192.00E.
Nakai, Masanori: *See*—
Tokumaru, Yukuya; Nakai, Masanori; Shinozaki, Satoshi; Nakamura, Junichi; Ito, Shintaro; and Nishi, Yoshio, 4,064,526, Cl. 357-46.000.
Nakai, Shiro; and Nakamura, Minoru, to Glory Kogyo Kabushiki Kaisha. Coin wrapping device in wrapping apparatus. 4,063,399, Cl. 53-59.00R.
Nakamura, Junichi: *See*—
Tokumaru, Yukuya; Nakai, Masanori; Shinozaki, Satoshi; Nakamura, Junichi; Ito, Shintaro; and Nishi, Yoshio, 4,064,526, Cl. 357-46.000.
Nakamura, Minoru: *See*—
Nakai, Shiro; and Nakamura, Minoru, 4,063,399, Cl. 53-59.00R.
Nakamura, Soichi: *See*—
Iizuka, Yutaka; and Nakamura, Soichi, 4,063,800, Cl. 350-184.000.
Nakamura, Toru: *See*—
Kuroda, Nobuyuki; Nakamura, Toru; Shiraishi, Takeichi; Matsuura, Kazuo; and Miyoshi, Mituji, 4,064,334, Cl. 526-119.000.
Nakazawa, Hideaki: *See*—
Kosaka, Yujiro; Nakazawa, Hideaki; Iikuni, Tetsuo; and Akashi, Mitsumasa, 4,064,085, Cl. 260-29.70R.
Nalco Chemical Company: *See*—
Sadowski, Anthony J., 4,064,318, Cl. 428-543.000.
Stoll, James W., 4,064,065, Cl. 252-192.000.
Napco Security Systems, Inc.: *See*—
Stockdale, Roy, 4,064,509, Cl. 340-411.000.
Nardozzi, Michael A., Jr. Rapid transit system. 4,063,517, Cl. 104-35.000.
Narey, James O.: *See*—
Saylor, William H.; and Narey, James O., 4,064,502, Cl. 340-324.00R.
Saylor, William H.; and Narey, James O., 4,064,503, Cl. 340-325.000.
National Controls, Inc.: *See*—
Rock, Frank C., 4,063,604, Cl. 177-25.000.
National Forge Company: *See*—
Papen, Eduard L. J., 4,063,941, Cl. 75-226.000.
National Manufacturing Company: *See*—
Stahl, Otto, Jr., 4,063,646, Cl. 211-4.000.
National Musical String Company: *See*—
Stone, W. Norman; and Falcone, Alfred S., 4,063,674, Cl. 228-173.00E.
National Patent Development Corporation: *See*—
Cowsar, Donald Roy; and Tanquary, Albert Charles, 4,064,086, Cl. 260-29.20R.
National Research Development Corporation: *See*—
McLean, John Walford; and Sced, Ian Robert, 4,064,311, Cl. 428-434.000.
Singer, Alfred Richard Eric, 4,064,295, Cl. 427-424.000.
National Semiconductor Corporation: *See*—
Burns, Carmen D., 4,063,993, Cl. 156-659.000.
Nauchno-Proizvodstveno Obedinenie po Veterinarno Delo: *See*—
Vassilev, Vassil Ivanov; Goranov, Hristo Vladimirov; and Sivchev, Sivcho Hristov, 4,063,892, Cl. 23-230.00B.
Nawafune, Hidemi: *See*—
Kawasaki, Motoo; Mizumoto, Shozo; and Nawafune, Hidemi, 4,064,022, Cl. 204-105.00R.
Naylor, Denis, to Mallory Batteries Ltd. Cell sealing means. 4,064,329, Cl. 429-174.000.
Nazarov, Nikolai Grigorievich: *See*—
Gurkov, Konstantin Stepanovich; Nazarov, Nikolai Grigorievich; Cherednikov, Evgeny Nikolaevich; Plavskikh, Vladimir Dmitrievich; Rozhkov, Leonid Georgievich; Tkach, Khaim Berkovich; Grigoraschenko, Vladimir Alexandrovich; Kostylev, Alexandr Dmitrievich; Davydov, Vasily Georgievich; and Zuev, Valentin Alexeevich, 4,063,423, Cl. 61-53.620.
Nebzydoski, John W.; and Patmore, Edwin L., to Texaco Inc. Synthetic aircraft turbine oil. 4,064,059, Cl. 252-49.900.
Neely, James W.; and Rock, Steven L., to Rohm and Haas Company. Gaseous phase adsorption using partially pyrolyzed polymer particles. 4,063,912, Cl. 55-74.000.
Nelsen, Marvin G.: *See*—
Schuessler, John C.; Nelsen, Marvin G.; and Tapp, David J., 4,064,471, Cl. 335-229.000.
Nelson, Albin J., to Pfizer Inc. Pyrrolidonecarboxylic acid derivatives as anti-ulcer agents. 4,064,264, Cl. 424-274.000.
Nelson, Wayne B.: *See*—
Hughes, William C.; Nelson, Wayne B.; and Possin, George E., 4,064,558, Cl. 364-900.000.
Nerenberg, Robert W.: *See*—
Bergstein, Frank David; Nerenberg, Robert W.; and Shiverdecker, James H., 4,063,403, Cl. 53-379.000.
Neri, Carlo; and Perrotti, Emilio, to Snam Progetti S.p.A. Process for the preparation of alpha-substituted epoxide compounds. 4,064,146, Cl. 260-348.160.
Neroni, Peter J.; and Kleykamp, Donald L., to Dayco Corporation. Polymeric flexible hose construction and method of making same. 4,064,355, Cl. 174-47.000.
Neroni, Peter J.: *See*—
Kleykamp, Donald L.; Neroni, Peter J.; Grabovez, Victor M.; and Holden, Homer N., 4,063,790, Cl. 339-16.00R.
Nestler, Gerhard: *See*—
Merger, Franz; Nestler, Gerhard; Oppenlaender, Knut; Uhl, Guenter; and Wissler, Ruediger, 4,064,309, Cl. 428-413.000.

Neth, Otto; and Schmitt, Robert A., to Columbia Machine, Inc. Swingable arcuate guide for selectively orienting articles. 4,063,632, Cl. 198-374.000.
Neti, Radhakrishna Murty; and Roggenkamp, Ray Lawrence, to Beckman Instruments, Inc. Methane analyzer. 4,063,895, Cl. 23-232.00R.
Nettleton, Donald E., Jr.; Bush, James A.; Bradner, William T.; and Schreiber, Richard H., to Bristol-Myers Company. Antibiotic compounds marcellomycin and musettamycin. 4,064,014, Cl. 195-96.000.
Netzel, Philip C., to I-T-E Imperial Corporation. Cutter for helically corrugated tube for flexible gas insulated cable. 4,063,355, Cl. 30-96.000.
Neumann, Henning; and Federer, Fritz, to Metzeler Kautschuk AG. Inflatable boat. 4,063,320, Cl. 9-2.00A.
Neumayr, Franz: *See*—
Scholz, Heinrich; Decker, Martin; and Neumayr, Franz, 4,064,218, Cl. 423-240.000.
New, Alan J.: *See*—
Smith, Colin F. G.; Oldham, Ronald C.; Hedges, Michael J.; New, Alan J.; and Pearson, William, 4,064,358, Cl. 174-70.00S.
New Brunswick Scientific Co., Inc.: *See*—
Nyiri, Laszlo K.; Toth, Gizella M.; Parmenter, Douglass V.; and Krishnaswami, Calidas S., 4,064,015, Cl. 195-108.000.
Newton, Robert G., to United States of America, Energy Research and Development Administration. Rupture disc. 4,064,003, Cl. 176-38.000.
Nichols, John H. Chair support for boat motor controls. 4,063,321, Cl. 9-7.000.
Nicholson, Oscar F. Folding frame assembly. 4,063,318, Cl. 5-327.00R.
Nicklas, Manfred E. Treating hollow articles by fluid driven bug. 4,064,293, Cl. 427-236.000.
Nielsen, Nils: *See*—
Gelius, Siegfried; Wieczorek, Hanne-Lore; Triller, Adolf; and Nielsen, Nils, 4,063,807, Cl. 351-24.000.
Nielsen, Richard B.: *See*—
Gilmour, John B.; Mehta, Praful K. A.; Mirliss, Melvin J.; and Nielsen, Richard B., 4,064,071, Cl. 252-455.00R.
Niemers, Ekkehard: *See*—
Wollweber, Hartmund; Niemers, Ekkehard; Schulz, Hans Peter; Thomas, Herbert; and Andrews, Peter, 4,064,270, Cl. 424-324.000.
Nife Jungner AB: *See*—
Elfwing, Erik Wiktor; and Swenne, Lars Harry, 4,064,332, Cl. 429-223.000.
Niizuma, Akira: *See*—
Matsushima, Yasunobu; Tanaka, Shigeo; and Niizuma, Akira, 4,063,968, Cl. 148-6.15R.
Niman, Joseph, Jr., to Posa-Cut Corporation. Indexable insert for grooving tools. 4,063,841, Cl. 407-70.000.
Nippon Electric Company, Ltd.: *See*—
Muranaka, Susumu, 4,064,399, Cl. 364-709.000.
Seki, Fumio; Oikado, Taizo; and Shintaku, Keiichi, 4,064,466, Cl. 331-94.50D.
Shiba, Hiroshi, 4,063,901, Cl. 29-578.000.
Nippon Kogaku K.K.: *See*—
Iizuka, Yutaka; and Nakamura, Soichi, 4,063,800, Cl. 350-184.000.
Itoi, Nobuo; Shimamura, Teruo; Fukami, Yoshio; Mori, Hidetoshi; and Miwa, Kenji, 4,063,816, Cl. 356-93.000.
Shimamura, Teruo; Fukami, Yoshio; and Mori, Hidetoshi, 4,063,817, Cl. 356-93.000.
Nippon Kokan Kabushiki Kaisha: *See*—
Adaniya, Takeshi; and Ohmura, Masaru, 4,064,320, Cl. 428-632.000.
Nippon Oil Company Ltd.: *See*—
Kuroda, Nobuyuki; Nakamura, Toru; Shiraishi, Takeichi; Matsuura, Kazuo; and Miyoshi, Mituji, 4,064,334, Cl. 526-119.000.
Nishikawa, Shigeki, 4,064,199, Cl. 260-879.000.
Nippon Shinyaku Co., Ltd.: *See*—
Murai, Hiromu; Ohata, Katsuya; Enomoto, Hiroshi; Chokai, Shoichi; Maehara, Mitsuhiro; Saito, Katsuhide; and Ozaki, Takayuki, 4,064,252, Cl. 424-266.000.
Nippon Tungsten Co., Ltd.: *See*—
Ogawa, Kazuki; Miyahara, Michito; and Furukawa, Mitsuhiko, 4,063,908, Cl. 51-307.000.
Nippondenso Co., Ltd.: *See*—
Oshikawa, Kiyomitsu, 4,063,695, Cl. 242-107.40A.
Nishi, Yoshio: *See*—
Tokumaru, Yukuya; Nakai, Masanori; Shinozaki, Satoshi; Nakamura, Junichi; Ito, Shintaro; and Nishi, Yoshio, 4,064,526, Cl. 357-46.000.
Nishikawa, Shigeki, to Nippon Oil Company Ltd. Curable coating compositions. 4,064,199, Cl. 260-879.000.
Nishimura, Naozumi: *See*—
Ishii, Yasuo; Nishimura, Naozumi; and Abe, Kohei, 4,063,510, Cl. 102-23.000.
Nishimura, Takuzo: *See*—
Hirai, Koichi; Iwano, Yuji; Saito, Tokio; Hiraoka, Tetsuo; Kishida, Yukichi; and Nishimura, Takuzo, 4,064,137, Cl. 260-306.70C.
Nissan Motor Company, Limited: *See*—
Mita, Yasuhiro; Uchino, Minoru; and Sasaki, Masato, 4,063,900, Cl. 23-288.00F.
Nisshin Steel Co., Ltd.: *See*—
Fujioka, Tokio; Kinugasa, Masayuki; Iizumi, Shozo; Teshima, Shizuhiro; and Shimizu, Isamu, 4,063,935, Cl. 75-128.00C.
Hirose, Yusuke; Ida, Fumihiro; and Ito, Takehiko, 4,064,437, Cl. 250-273.000.
Nissin Diamond Co., Ltd.: *See*—
Uemura, Yasukuni, 4,063,542, Cl. 125-30.0WD.
Nitro Nobel AB: *See*—
Fossan, Kare Ragnvald; and Ekman, Gunnar Olof, 4,063,975, Cl. 149-92.000.
Nitto Electric Industrial Co., Ltd.: *See*—
Nakai, Junkichi; and Fukunaga, Kazuo, 4,064,030, Cl. 204-192.00E.
Nordengren Patenter AB: *See*—
Nordengren, Rolf Gunnar Jonas, 4,063,463, Cl. 74-231.00J.
Nordengren, Rolf Gunnar Jonas, to Nordengren Patenter AB. Method of fitting a filter belt to a filter assembly. 4,063,463, Cl. 74-231.00J.
North Electric Company: *See*—
Battocletti, Frank E., 4,064,369, Cl. 179-15.0BF.
Northern Telecom Limited: *See*—
Lightfoot, Richard, 4,064,551, Cl. 361-399.000.
Northrop Corporation: *See*—
Malm, Robert Edward, 4,064,363, Cl. 179-1.0SA.
Norton, James F.: *See*—
Kirkpatrick, Conilee G.; Norton, James F.; and Possin, George E., 4,064,495, Cl. 365-103.000.
Novo Industri A/S: *See*—
Petersen, Bent Riber; and Yates, John Russel, 4,064,008, Cl. 195-6.000.
Nowak, Robert H., to Motch & Merryweather Machinery Company, The. Method of grinding the teeth of a circular saw to an improved contour. 4,063,471, Cl. 76-112.000.
Numrich, George R., Jr. Method of decorating wood and wood-like products. 4,064,386, Cl. 219-68.000.
Nyiri, Laszlo K.; Toth, Gizella M.; Parmenter, Douglass V.; and Krishnaswami, Calidas S., to New Brunswick Scientific Co., Inc. Control of biosynthesis in submerged culture. 4,064,015, Cl. 195-108.000.
Oakley, Raymond Edward: *See*—
Dickson, John Flackett; and Oakley, Raymond Edward, 4,064,494, Cl. 365-49.000.
Oberster, Arthur Eugene; and Lawson, David Francis, to Firestone Tire & Rubber Company, The. Poly(phosphazene) compositions. 4,064,095, Cl. 260-37.00R.
Oberwelland, Hugo; and Klahn, Uwe, to August Storck KG. Apparatus for the production of hollow confections provided with center fillings. 4,063,864, Cl. 425-433.000.
O'Brien, John R.; Holman, Harry A., Jr.; and Kallmeyer, Albert W., to United States of America, Air Force. Composite rocket nozzle structure. 4,063,684, Cl. 239-265.110.
Occidental Petroleum Corporation: *See*—
Choi, Charles K., 4,064,018, Cl. 201-12.000.
Ochiai, Koichi, to Yoshida Kogyo Kabushiki Kaisha. Twin-needle sewing machine with guide means for simultaneously stitching a pair of concealed slide fastener stringers to a fabric. 4,063,524, Cl. 112-152.000.
O'Connell, Richard A.; and Foster, Robert E., to United States of America, Agriculture. Process for preparing space-dyed yarn. 4,063,888, Cl. 8-149.000.
O'Connor, John F., to Torin Corporation. Axial flow impeller with improved blade shape. 4,063,852, Cl. 416-228.000.
Odate, Ryoji; and Haneda, Kazuo, to Shiseido Company, Ltd. Thermoplastic resin composition having a pearly luster. 4,064,099, Cl. 260-42.180.
O'Dell, David L., to Wheelabrator-Frye, Inc. Grease gun and pressure relief valve therefor. 4,063,618, Cl. 184-105.00A.
Oehler, Wyhlen, Lagertechnic AG: *See*—
Halada, Karl Rudolf, 4,063,653, Cl. 214-16.40A.
Officine Galileo Meccanotessile S.p.a.: *See*—
Santi, Luciano, 4,063,575, Cl. 139-370.200.
Ogawa, Kazuki; Miyahara, Michito; and Furukawa, Mitsuhiko, to Nippon Tungsten Co., Ltd. Process for manufacturing ceramic cutting tool materials. 4,063,908, Cl. 51-307.000.
Ogawa, Yasunao; and Yonetani, Yukio, to Shionogi & Co., Ltd. Test strip for the detection of occult blood in excreta. 4,063,894, Cl. 23-230.00B.
Ohata, Katsuya: *See*—
Murai, Hiromu; Ohata, Katsuya; Enomoto, Hiroshi; Chokai, Shoichi; Maehara, Mitsuhiro; Saito, Katsuhide; and Ozaki, Takayuki, 4,064,252, Cl. 424-266.000.
Ohmura, Masaru: *See*—
Adaniya, Takeshi; and Ohmura, Masaru, 4,064,320, Cl. 428-632.000.
Oikado, Taizo: *See*—
Seki, Fumio; Oikado, Taizo; and Shintaku, Keiichi, 4,064,466, Cl. 331-94.50D.
Oishi, Kiyohiko: *See*—
Sanda, Shougo; Inoue, Tokuta; Oishi, Kiyohiko; and Yamada, Toshio, 4,063,536, Cl. 123-25.00J.
O'Keefe, Dennis Grover: *See*—
Schubeler, Kenneth Erwin; Carnahan, Danny L.; and O'Keefe, Dennis Grover, 4,064,395, Cl. 364-107.000.
Oldham, Ronald C.: *See*—
Smith, Colin F. G.; Oldham, Ronald C.; Hedges, Michael J.; New, Alan J.; and Pearson, William, 4,064,358, Cl. 174-70.00S.
Oldroyd, Brian; Pentney, Harry; and Terry, John Charles, to Gillette Company, The. Shaving unit. 4,063,354, Cl. 30-47.000.
Olds, John R.: *See*—
Greer, Donald J.; and Olds, John R., 4,063,373, Cl. 37-115.000.
Oliver, Roy N. Padlock closure. 4,063,435, Cl. 70-38.00A.
Olson, Carroll G.: *See*—
Olson, Theodore V.; and Olson, Carroll G., 4,063,569, Cl. 137-344.000.
Olson, LeRoy C. Trailer for farm machinery. 4,063,745, Cl. 280-43.230.
Olson, Theodore V.; and Olson, Carroll G. Tract-tailored control

means and method for center-pivot irrigation apparatus. 4,063,569, Cl. 137-344.000.
Olsson, Gunnar. Soil stabilizing apparatus. 4,063,523, Cl. 111-7.000.
Olympus Optical Co., Ltd.: *See—*
 Imai, Toshihiro; and Ikeda, Yoshitsugi, 4,063,802, Cl. 350-223.000.
 Maitani, Yoshihisa; Shimoyama, Kunio; Yoshida, Muneaki; Hashimoto, Akihiko; and Kitagawa, Masahiro, 4,064,517, Cl. 354-51.000.
 Saito, Shoichi, 4,063,370, Cl. 35-35.00A.
 Sato, Masanobu, 4,064,374, Cl. 179-100.110.
 Taira, Akio, 4,063,797, Cl. 350-87.000.
O'Malley, Larry V., to Westinghouse Air Brake Company. Dual tone selector with answerback signalling. 4,064,367, Cl. 179-2.00A.
O'Neal, Leo; Stark, Wayne H.; and Hoium, Richard B., to Wilson Foods Corporation. Gut puller. 4,063,331, Cl. 17-45.000.
Onuma, Kiyoshi: *See—*
 Kuramochi, Kojiro; Watanabe, Kazuaki; and Onuma, Kiyoshi, 4,063,468, Cl. 74-763.000.
Oppenlaender, Knut: *See—*
 Merger, Franz; Nestler, Gerhard; Oppenlaender, Knut; Uhl, Guenter; and Wissler, Ruediger, 4,064,309, Cl. 428-413.000.
Optigon Research & Development Corporation: *See—*
 McLaughlin, Thomas D.; and Altman, Richard M., 4,064,516, Cl. 354-31.000.
Optische Werke G. Rodenstock: *See—*
 Gelius, Siegfried; Wieczorek, Hanne-Lore; Triller, Adolf; and Nielsen, Nils, 4,063,807, Cl. 351-24.000.
Orcutt, John W., to Texas Instruments Incorporated. Proportional stroke automatic temperature control system. 4,063,682, Cl. 236-87.000.
Orihara, Sizuo, to Tokyo Seiko Rope Manufacturing Co., Ltd. Cable guiding device. 4,063,711, Cl. 254-134.30R.
Oroshnik, William, to SCM Corporation. Synthesis of intermediates for vitamin A. 4,064,162, Cl. 560-234.000.
Oroshnik, William, to SCM Corporation. Synthesis of vitamin A, intermediates and conversion thereof to vitamin A. 4,064,183, Cl. 260-617.00A.
Orth, Edward G.: *See—*
 Hyler, John H.; and Orth, Edward G., 4,063,361, Cl. 37-129.000.
Osawa, Sadao: *See—*
 Tamai, Yasuo; and Osawa, Sadao, 4,063,946, Cl. 96-1.200.
Osborne, Calvin E., Sr. Pinch valve formed from a wire helix. 4,063,706, Cl. 251-4.000.
Oshikawa, Kiyomitsu, to Nippondenso Co., Ltd. Seat belt retractor. 4,063,695, Cl. 242-107.40A.
Ota, Yoshihiko; and Hirota, Akira, to Victor Company of Japan, Ltd. Amplitude limiting circuit for frequency modulated video signals. 4,064,537, Cl. 358-127.000.
Ott, Karl: *See—*
 Gorille, Ingo; Borst, Wolfgang; Klotzner, Winfried; Ott, Karl; Moller, Heinz; Honig, Gunter; Kiencke, Uwe; Zechnall, Martin; Flaig, Ulrich; Schulz, Alfred; and Pagel, Ernst-Olav, 4,063,539, Cl. 123-117.00D.
Otten, Geneva Gail; and Rheinecker, Tom Conrad, to Procter & Gamble Company, The. Disulfoxide abscission agents. 4,063,927, Cl. 71-94.000.
Ottenhues, Ludger; and Meyer, Willi, to Windmoller & Holscher. Apparatus for applying and withdrawing an impression cylinder acting on the plate cylinder of an intaglio printing press. 4,063,504, Cl. 101-153.000.
Ottenstein, Allan S., to Research Fuels, Inc. Gasoline pump modification apparatus. 4,064,555, Cl. 364-465.000.
Ouchi, Takaaki. Line winding apparatus. 4,063,690, Cl. 242-54.00R.
Owatonna Tool Company: *See—*
 Bruzek, Daniel A., 4,063,412, Cl. 59-7.000.
Owen, Shubel H.: *See—*
 Felker, Paul J.; and Owen, Shubel H., 4,063,715, Cl. 366-187.000.
Owens, Virgie M. Multiple light device. 4,064,430, Cl. 362-231.000.
Oxy Metal Industries Corporation: *See—*
 Howell, John K., Jr., 4,063,969, Cl. 148-6.270.
 Matsushima, Yasunobu; Tanaka, Shigeo; and Niizuma, Akira, 4,063,968, Cl. 148-6.15R.
Oyama, Yoshinori: *See—*
 Masuda, Shunji; Oyama, Yoshinori; Tanaka, Hisao; Uchigasaki, Isao; and Sasaki, Takehisa, 4,064,111, Cl. 260-75.00M.
Ozaki, Takayuki: *See—*
 Murai, Hiromu; Ohata, Katsuya; Enomoto, Hiroshi; Chokai, Shoichi; Maehara, Mitsuhiro; Saito, Katsuhide; and Ozaki, Takayuki, 4,064,252, Cl. 424-266.000.
P.A. Rentrup, Hubbert & Wagner Fahrzeugausstattungen GmbH & Co. KG: *See—*
 Wahlmann, Ernst; and Schottker, Willi, 4,063,776, Cl. 297-361.000.
Pace, Antonino, to Fiat Societa per Azioni. Method and apparatus for fuel recovery in internal combustion engines. 4,063,540, Cl. 123-119.00R.
Pacific Technology, Inc.: *See—*
 Leyde, Warren L., 4,064,485, Cl. 340-147.00R.
Pagel, Ernst-Olav: *See—*
 Gorille, Ingo; Borst, Wolfgang; Klotzner, Winfried; Ott, Karl; Moller, Heinz; Honig, Gunter; Kiencke, Uwe; Zechnall, Martin; Flaig, Ulrich; Schulz, Alfred; and Pagel, Ernst-Olav, 4,063,539, Cl. 123-117.00D.
Paget, Charles J., to Eli Lilly and Company. Agent for the control of plant-pathogenic organisms. 4,064,261, Cl. 424-270.000.
Paginton, Philip Norman: *See—*
 Coleman, John Dale; and Paginton, Philip Norman, 4,063,622, Cl. 188-153.00R.
Pak, Ivan Timofeevich: *See—*
 Akushsky, Izrail Yakovlevich; Burtsev, Vladimir Mikhailovich; Kazangapov, Alken Nurmagambetovich; and Pak, Ivan Timofeevich, 4,064,400, Cl. 364-746.000.
Paley, Lewis A. Treatment of sugar cane. 4,063,960, Cl. 127-42.000.
Palosi, Eva: *See—*
 Toth, Edit; Torley, Jozsef; Palosi, Eva; Szeberenyi, Szaboles; Szporny, Laszlo; Gorog, Sandor; and Meszaros, Csilla, 4,064,121, Cl. 260-239.00B.
Panarello, Joseph A., to Sangamo Weston, Inc. Dynamic linearization system for a radiation gauge. 4,064,396, Cl. 364-573.000.
Pansini, Andrew L. Minimum friction swivel for swimming pool cleaners. 4,063,761, Cl. 285-275.000.
Paoli, Jean: *See—*
 Chaussy, Roland; and Paoli, Jean, 4,063,432, Cl. 62-419.000.
Papen, Eduard L. J., to National Forge Company. Method for loading and unloading an isostatic press for compression of pre-formed powder objects. 4,063,941, Cl. 75-226.000.
Papenfuhs, Theodor; and Volk, Heinrich, to Hoechst Aktiengesellschaft. Novel 2-hydroxynaphthalene-1-aldehydes, process for preparing them and their use. 4,064,349, Cl. 560-56.000.
Papetti, Stelvio, to Foster Grant Co., Inc. ABS polymer and process for its preparation. 4,064,116, Cl. 260-880.00R.
Papp, Eugene A., to Sandoz, Inc. Hydroxymethyl-substituted-2(1H)-quinazolinones. 4,064,246, Cl. 424-251.000.
Pappo, Raphael: *See—*
 Collins, Paul W.; and Pappo, Raphael, 4,064,350, Cl. 560-121.000.
Parekh, Girish Girdhar, to American Cyanamid Company. Coating—composition containing an alkylated glycoluril, a polymeric non-self-crosslinking compound and an acid catalyst. 4,064,191, Cl. 260-850.000.
Parenchuck, Charles Stephen, to Combustion Engineering, Inc. Method of adjusting rod type scrubber. 4,064,202, Cl. 261-44.00R.
Parker, David I.: *See—*
 Kadish, Ben-Ami; and Parker, David I., 4,063,513, Cl. 102-70.20R.
Parmenter, Douglass V.: *See—*
 Nyiri, Laszlo K.; Toth, Gizella M.; Parmenter, Douglass V.; and Krishnaswami, Calidas S., 4,064,015, Cl. 195-108.000.
Parquet, Donald James; and Pedersen, Carl Oluf, to J. I. Case Company. Automatic hydraulic shut-off system. 4,063,489, Cl. 91-445.000.
Parr, David Turner, to BICC Limited. Method of resealing a cable joint. 4,064,216, Cl. 264-263.000.
Parrent, George B., Jr.: *See—*
 Bernstein, Kenneth L.; Considine, Philip S.; and Parrent, George B., Jr., 4,063,799, Cl. 350-162.0SF.
Parsons, Kenneth A., to Meilink Steel Safe Company, The. Night depository closure. 4,063,520, Cl. 109-66.000.
Pasedach, Klaus; and Wagner, Wolfgang, to U.S. Philips Corporation. Device for measuring radiation absorption in a section of a body. 4,064,393, Cl. 364-414.000.
Passler, Herbert Edwin; and Fredenberg, James David, to Honeywell Information Systems Inc. Method of protecting micropackages from their environment. 4,063,349, Cl. 29-627.000.
Patent-Treuhand-Gesellschaft fur Elektrische Gluhlampen mbH: *See—*
 Krense, Horst; and Dobrusskin, Alexander, 4,064,416, Cl. 315-261.000.
Patmore, Edwin L.: *See—*
 Nebzydoski, John W.; and Patmore, Edwin L., 4,064,059, Cl. 252-49.900.
Patrick, James E. Motorized mechanical horse. 4,063,607, Cl. 180-6.500.
Patterson, Frank Knowles, to Du Pont de Nemours, E. I., and Company. Conductor compositions. 4,064,310, Cl. 428-427.000.
Patterson, Henry B., Jr.: *See—*
 Hon, Wai-Leung; and Patterson, Henry B., Jr., 4,064,408, Cl. 307-351.000.
Patterson, Peter Theodore, to RCA Corporation. System and method for authenticating an electronically transmitted document. 4,064,389, Cl. 235-431.000.
Patton, Jesse T.; and Langer, Alois, to Westinghouse Electric Corporation. Method for the preparation of iron electrodes. 4,064,331, Cl. 429-221.000.
Patzke, Hans-Jurgen: *See—*
 Koerner, Gotz; Schmidt, Gunter; Langner, Jaroslav; and Patzke, Hans-Jurgen, 4,064,057, Cl. 252-8.600.
Paul, Josef: *See—*
 Hupfl, Johann; Czermak, Manfred; Teichmann, Helmut; and Paul, Josef, 4,063,883, Cl. 8-116.00P.
Paul, Kermit D., to Fuller Company. Compressor capacity and lubrication control system. 4,063,855, Cl. 418-84.000.
Paul, Richard Nelson: *See—*
 Edgell, James Ensign; Lineback, Lynn David; and Paul, Richard Nelson, 4,064,447, Cl. 320-2.000.
Paul Troester Maschinenfabrik: *See—*
 Koch, Klaus, 4,063,718, Cl. 366-75.000.
Paulson, Thomas Michael: *See—*
 Crowe, William Ray; and Paulson, Thomas Michael, 4,063,630, Cl. 197-53.000.
Pawsat, Carlton P., to Wald Manufacturing Co., Inc. Reflective, rat-trap bicycle pedal. 4,063,798, Cl. 350-99.000.
Pearson, William: *See—*
 Smith, Colin F. G.; Oldham, Ronald C.; Hedges, Michael J.; New, Alan J.; and Pearson, William, 4,064,358, Cl. 174-70.00S.

Pech, Jan J., to Econo-Therm Energy Systems Corporation. Incinerator having gas flow controlling separator. 4,063,521, Cl. 110-8.00A.
Pedersen, Carl Oluf: *See—*
 Parquet, Donald James; and Pedersen, Carl Oluf, 4,063,489, Cl. 91-445.000.
Peet, Norton P.; and Sunder, Shyam, to Dow Chemical Company, The. 2-Cycloalkyl-amino-2-oxazolines. 4,064,348, Cl. 544-137.000.
Peichl, Robert: *See—*
 Maier, Franz; and Peichl, Robert, 4,064,223, Cl. 423-522.000.
Pendell, Barry J.: *See—*
 Drach, John E.; and Pendell, Barry J., 4,064,163, Cl. 260-502.40R.
Penick, Joe E., to Mobil Oil Corporation. Fluid catalytic cracking. 4,064,039, Cl. 208-160.000.
Pentney, Harry: *See—*
 Oldroyd, Brian; Pentney, Harry; and Terry, John Charles, 4,063,354, Cl. 30-47.000.
Peressini, Peter Paul; Reith, Timothy Martin; and Sullivan, Michael James, to International Business Machines Corporation. Method for forming a self-aligned schottky barrier device guardring. 4,063,964, Cl. 148-1.500.
Perkins, Robert L. Lug nut tool. 4,063,475, Cl. 81-57.220.
Perrotti, Emilio: *See—*
 Neri, Carlo; and Perrotti, Emilio, 4,064,146, Cl. 260-348.160.
Perry, Kenneth E., to Adamation, Inc. Oscillating flatware washing device. 4,063,634, Cl. 198-478.000.
Persson, Bengt Arne, to B A Installationsutveckling AB. Hand-held applicator device for applying a liquid lubricant to the end portion of a tube. 4,063,827, Cl. 401-10.000.
Pertec Computer Corporation: *See—*
 Jennings, Alan K., 4,064,561, Cl. 364-900.000.
Pesnelle, Pierre; and Teisseire, Paul Jose, to Societe Anonyme Roure Bertrand Dupont. Preparation of novel ethers. 4,064,181, Cl. 260-611.00F.
Pessia, Thomas, to Dresser Industries, Inc. Tapping T for plastic pipe. 4,063,844, Cl. 408-204.000.
Peters, Ernest, to Texasgulf Canada Ltd. Process for the treatment of complex lead-zinc concentrates. 4,063,933, Cl. 75-101.00R.
Petersen, Bent Riber; and Yates, John Russel, to Novo Industri A/S. Gelatin extraction. 4,064,008, Cl. 195-6.000.
Petersen, Harro: *See—*
 Faulhaber, Gerhard; Fuetterer, Hugo; Petersen, Harro; and Schwab, Hermann, 4,063,879, Cl. 8-2.50A.
Peterson, Robert S., to Westinghouse Electric Corporation. Synchronous motor KVAR regulation system. 4,064,419, Cl. 318-179.000.
Peterson, Roger L.; and Joyce, George M., to Flamemaster Corporation. Fire retardant product for use with electrical cables and the like. 4,064,359, Cl. 174-107.000.
Petrolite Corporation: *See—*
 Quinlan, Patrick M., 4,064,044, Cl. 210-58.000.
Petros, Andrew J., to Mesta Machine Company. Sealing arrangement for a rotatable member. 4,063,743, Cl. 277-63.000.
Pfizer Inc.: *See—*
 Hammen, Philip D.; and Milne, George M., Jr., 4,064,272, Cl. 424-330.000.
 Nagel, Arthur A., 4,064,143, Cl. 260-343.000.
 Nelson, Albin J., 4,064,264, Cl. 424-274.000.
 Ross, Barry Clive; and Shroot, Braham, 4,064,241, Cl. 424-246.000.
Pfleiderer, Hans Joerg: *See—*
 Knauer, Karl; and Pfleiderer, Hans Joerg, 4,064,491, Cl. 365-149.000.
Pforzheimer Uhren-Rohwerke Rudolf Wehner: *See—*
 Murrle, Kurt, 4,063,411, Cl. 58-125.00B.
Philadelphia Gear Corporation: *See—*
 Zouzoulas, John, 4,063,707, Cl. 251-79.000.
Philip Morris Industrial Incorporated: *See—*
 Kuehn, Harold H.; and Mittmann, Peter M., 4,063,641, Cl. 206-484.000.
Phillips, Arthur P.: *See—*
 McDermed, John D.; McKenzie, Gerald M.; and Phillips, Arthur P., 4,064,271, Cl. 424-330.000.
Phillips, Claude Frank, Jr.: *See—*
 Leavens, Dwight Earl; and Phillips, Claude Frank, Jr., 4,064,117, Cl. 260-97.600.
Phillips, Leonard R. Air conditioning system having safety features for determining and for eliminating dangerous conditions in the form of fire, smoke, or unusually high temperatures. 4,063,595, Cl. 169-60.000.
Phillips, Peter Harold; and Warwick, David William, to Plessey Handel und Investments A.G. Electron beam equipment. 4,064,543, Cl. 358-248.000.
Phillips Petroleum Company: *See—*
 Blackwell, Jennings P., 4,064,084, Cl. 260-29.20R.
 Eastman, Alan D.; and Farha, Floyd, Jr., 4,064,190, Cl. 260-681.50R.
 Edmonds, James T., Jr., 4,064,114, Cl. 260-79.100.
 Stapp, Paul R.; and Brady, Donnie G., 4,064,115, Cl. 260-79.100.
 Uraneck, Carl A.; and Burleigh, John E., 4,064,337, Cl. 526-204.000.
Pick, Peter, to Knorr-Bremse GmbH. Two-pressure brake control valve for airbrakes. 4,063,784, Cl. 303-69.000.
Picker Corporation: *See—*
 Sokol, Henry R.; and Sorwick, Jack R., 4,064,500, Cl. 340-267.00R.
Pier-Amory, Jacques, to Werkzeugmaschinenfabrik Oerlikon-Buhrle AG. Automatic firing weapon. 4,063,487, Cl. 89-130.000.
Pik, Katalin: *See—*
 Mago nee Karacsony, Erzsebet; Borsi, Jozsef; Csanyi, Endre; Pik, Katalin; and Wolf, Lajos, 4,064,249, Cl. 424-261.000.
Pike, Roscoe A.: *See—*
 DeCrescente, Michael A.; Layden, George K.; and Pike, Roscoe A., 4,064,207, Cl. 264-29.600.
Pilet, Charles: *See—*
 Bocher, Dominique; and Pilet, Charles, 4,064,238, Cl. 424-227.000.
Pinede, Edouard; and Litser, John Fraser, to International Standard Electric Corporation. Line circuit for key telephone systems. 4,064,373, Cl. 179-99.000.
Pinter, Merrill E.: *See—*
 Kress, Edward S.; Medley, Jackson C.; and Pinter, Merrill E., 4,063,658, Cl. 214-314.000.
Pioneer Electronic Corporation: *See—*
 Saeki, Yoshifumi; and Uemura, Hiroki, 4,064,536, Cl. 358-118.000.
Piotrowski, Tadeusz, to Worson S.A. Mold device for the production of hollow bodies from thermoplastic materials. 4,063,868, Cl. 425-533.000.
Pitney-Bowes, Inc.: *See—*
 Schrempp, Ernst; and Hazelton, Henry S., Jr., 4,063,809, Cl. 355-3.0DR.
Pittet, Alan Owen: *See—*
 Withycombe, Donald Arthur; Hruza, Anne; Vock, Manfred Hugo; Giacino, Christopher; Mookherjee, Braja Dulal; Pittet, Alan Owen; and Schreiber, William L., 4,064,279, Cl. 426-535.000.
Pizzey, Anthony Reginald; and Waters, Alan James, to Caplin Engineering Company Limited. Machine tool indexing mechanism. 4,063,482, Cl. 83-207.000.
Plas Plugs Limited: *See—*
 Hepworth, Paul Steabben, 4,063,356, Cl. 30-162.000.
Plast & Form A/S: *See—*
 Hansen, Odd, 4,063,746, Cl. 280-16.000.
Plavskikh, Vladimir Dmitrievich: *See—*
 Gurkov, Konstantin Stepanovich; Nazarov, Nikolai Grigorievich; Cherednikov, Evgeny Nikolaevich; Plavskikh, Vladimir Dmitrievich; Rozhkov, Leonid Georgievich; Tkach, Khaim Berkovich; Grigoraschenko, Vladimir Alexandrovich; Kostylev, Alexandr Dmitrievich; Davydov, Vasily Georgievich; and Zuev, Valentin Alexeevich, 4,063,423, Cl. 61-53.620.
Plessey Handel und Investments A.G.: *See—*
 Dickson, John Flackett; and Oakley, Raymond Edward, 4,064,494, Cl. 365-49.000.
 Evans, Colin Ashcroft, 4,063,350, Cl. 29-628.000.
 Phillips, Peter Harold; and Warwick, David William, 4,064,543, Cl. 358-248.000.
Pluscec, Josip: *See—*
 Meyers, Edward; Trejo, William H.; Pluscec, Josip; and Brown, William E., 4,064,013, Cl. 195-80.00R.
Pochan, John M.; and Turner, Sam R., to Xerox Corporation. Photoconductive insulating films comprising fluorenone-substituted oligomers. 4,063,947, Cl. 96-1.50N.
Polaroid Corporation: *See—*
 Douglas, Lawrence M., 4,064,518, Cl. 354-86.000.
 Kee, Richard C., 4,064,519, Cl. 354-141.000.
Polyair Maschinebau GmbH: *See—*
 Schmidt, Oskar; Grunner, Erich; Tompich, Horst; Lenk, Gerhard; and Drum, Adam, 4,063,861, Cl. 425-542.000.
Polyakova, Victoria Petrovna: *See—*
 Smirnov, Viktor Sergeevich; Gryaznov, Vladimir Mikhailovich; Lebedeva, Valentina Ivanovna; Mischenko, Alexandr Petrovich; Polyakova, Victoria Petrovna; and Savitsky, Evgeny Mikhailovich, 4,064,188, Cl. 260-672.00R.
Pomot, Jean Louis Emile, to Societe Francaise d'Oxycatalyse. Catalyst for the purification of the exhaust gases of internal combustion engines. 4,064,073, Cl. 252-465.000.
Ponsinet, Gerard: *See—*
 Farge, Daniel; Jossin, Alain; Ponsinet, Gerard; and Reisdorf, Daniel, 4,064,247, Cl. 424-258.000.
Pont-A-Mousson S.A.: *See—*
 Janniere, Alain, 4,063,867, Cl. 425-526.000.
 Lorthiois, Thierry Antoine, 4,063,709, Cl. 251-173.000.
Ponticello, Gerald S.: *See—*
 Anderson, Paul S.; Christy, Marcia E.; and Ponticello, Gerald S., 4,064,139, Cl. 260-313.100.
Popowich, Michael John: *See—*
 Bouchard, Robert Joseph; Brixner, Lothar Heinrich; and Popowich, Michael John, 4,063,341, Cl. 29-25.420.
Porcelli, Joseph J.: *See—*
 Siskin, Michael; and Porcelli, Joseph J., 4,064,189, Cl. 260-676.00R.
Posa-Cut Corporation: *See—*
 Niman, Joseph, Jr., 4,063,841, Cl. 407-70.000.
Posnansky, Mario. Method and apparatus for suppressing the visible radiation emitted by a source of infra-red radiation. 4,064,402, Cl. 250-504.000.
Possin, George E.: *See—*
 Hughes, William C.; Nelson, Wayne B.; and Possin, George E., 4,064,558, Cl. 364-900.000.
 Kirkpatrick, Conilee G.; Norton, James F.; and Possin, George E., 4,064,495, Cl. 365-103.000.
Post, Richard L.: *See—*
 Von Hoene, Donald C.; and Post, Richard L., 4,063,945, Cl. 96-1.00R.
Potlatch Corporation: *See—*
 Henry, James W., 4,063,679, Cl. 229-41.00C.
Pouchert, Walter P.: *See—*
 Hansen, Ray W.; and Pouchert, Walter P., 4,064,427, Cl. 362-96.000.
Powell, John David; Hubbard, Mont; and Clappier, Robert R., to

Leland Stanford Junior University, The Board of Trustees of. Ignition timing control method and apparatus. 4,063,538, Cl. 123-117.00R.
Power, George Edward; and Wulfekotter, Dudley, to Formica Corporation. Interlaminar flocked laminate. 4,064,297, Cl. 428-86.000.
Powers, John R.; and Miller, Frances C., to Westvaco Corporation. Mercerizing compositions. 4,063,886, Cl. 8-127.000.
PPG Industries, Inc.: *See—*
Babil, Simon; Claar, James A.; and Temple, Rodger G., 4,064,294, Cl. 427-373.000.
Briar, Thomas J.; and Bour, Thomas C., 4,063,915, Cl. 65-11.00R.
Das, Suryya K., 4,064,087, Cl. 260-29.6RB.
Ecke, George G., 4,064,178, Cl. 260-607.0AR.
Hahn, Ernest A., 4,064,286, Cl. 427-44.000.
Precision Metalsmiths, Inc.: *See—*
Horton, Robert A.; and Yaichner, Ella M., 4,064,083, Cl. 260-28.50R.
Prell, George A. Variable-span pressure gauge. 4,063,459, Cl. 73-397.000.
Pretini, Gisberto. Anti-robbery and anti-hostage equipment provided with a one-way rotating door for banks and the like. 4,063,519, Cl. 109-8.000.
Price, Basil Robert: *See—*
Hanson, William Michael; and Price, Basil Robert, 4,063,834, Cl. 403-138.000.
Price, Charles E.: *See—*
Kipple, Harry P.; Alke, Roger J.; and Price, Charles E., 4,063,532, Cl. 118-429.000.
Pridonoff, Eric L.: *See—*
Stary, Marvin L.; Brown, Edward L.; and Pridonoff, Eric L., 4,063,874, Cl. 431-350.000.
Priepke, Gunther: *See—*
Rothe, Hans Joachim; Heinze, Helmut; Whitehead, Brian D.; and Priepke, Gunther, 4,064,112, Cl. 260-75.00M.
Procter & Gamble Company, The: *See—*
Otten, Geneva Gail; and Rheinecker, Tom Conrad, 4,063,927, Cl. 71-94.000.
Produits Chimiques Du Bearn: *See—*
Labat, Yves; and Boy, Aristide, 4,064,159, Cl. 260-465.50R.
Produits Chimiques Ugine Kuhlmann: *See—*
Razavi, Djavad, 4,063,881, Cl. 8-41.00B.
Pullman Incorporated: *See—*
Adler, Franklin P., 4,063,764, Cl. 292-256.500.
Pye Limited: *See—*
Hubbard, Robert William; and Davis, Timothy John Archer, 4,063,649, Cl. 212-39.00R.
Quinlan, Patrick M., to Petrolite Corporation. Process for chelating and inhibiting scale in aqueous systems. 4,064,044, Cl. 210-58.000.
Rabilloud, Guy; and Sillion, Bernard, to Institut Francais du Petrole. Di-substituted meta-terphenyl compounds and resulting polymers. 4,064,176, Cl. 260-590.00D.
Rabinowitz, Robert; and Welcher, Richard Parke, to American Cyanamid Company. Process for the high molecular weight polymers of diallyldimethylammonium fluoride polymers directly from diallyldimethylammonium fluoride monomer. 4,064,333, Cl. 526-77.000.
Rall, Marcus E., to Westinghouse Electric Corporation. Self-lubricating auxiliary bearing with a main bearing failure indicator. 4,063,786, Cl. 308-1.00A.
Rame-Hart, Inc.: *See—*
Grat, Felix R., 4,063,823, Cl. 356-197.000.
Rank Organisation Limited, The: *See—*
Russell, Kenneth Foden; and Garner, Alex Victor, 4,064,375, Cl. 179-110.00A.
Rank Xerox Ltd.: *See—*
Takiguchi, Koichi; and Itami, Teruhiko, 4,064,313, Cl. 428-447.000.
Tamai, Yasuo; and Osawa, Sadao, 4,063,946, Cl. 96-1.200.
Raudys, Vytas Andrew; and DeVitto, Ronald Robert, to Union Carbide Corporation. Rotary cutting device. 4,063,481, Cl. 83-199.000.
Rauhut, Michael McKay; and Semsel, Andrew Milo, to American Cyanamid Company. Stabilization of hydrogen peroxide solutions. 4,064,064, Cl. 252-188.3CL.
Rayborn, Jerry J. Drilling fluid lubricant. 4,063,603, Cl. 175-65.000.
Raymond, David William: *See—*
Van Ryn, Arthur Louis; Van Loo, William Rudolph; and Raymond, David William, 4,063,392, Cl. 52-9.000.
Raymond Lee Organization, Inc., The: *See—*
Denis, Anna, 4,063,768, Cl. 294-19.00R.
Hardin, John Kelly, 4,063,767, Cl. 294-16.000.
Kirkwood, Robert E., 4,063,714, Cl. 254-24.000.
McCallum, David F., 4,063,382, Cl. 46-74.00D.
Zeller, David M., 4,064,365, Cl. 179-1.00E.
Raytheon Company: *See—*
Bowen, Robert F., 4,063,544, Cl. 126-270.000.
Hapgood, William H., 4,063,545, Cl. 126-271.000.
Manfanovsky, Serge, 4,064,511, Cl. 343-7.00A.
Razavi, Djavad, to Produits Chimiques Ugine Kuhlmann. Synthetic polyamide fibres colored with acid azobenzene dyestuffs, containing a N-alkyl (or substituted alkyl)-n-sulphophenoxyalkylamino radical in the para position to the azo linkage. 4,063,881, Cl. 8-41.00B.
RCA Corporation: *See—*
Borgese, William Anthony, 4,063,820, Cl. 356-167.000.
Carlson, David Emil, 4,064,521, Cl. 357-2.000.
Cartwright, James Murgen, Jr., 4,064,506, Cl. 340-347.0DA.
Leidich, Arthur John, 4,064,463, Cl. 330-257.000.
Patterson, Peter Theodore, 4,064,389, Cl. 235-431.000.
Schneider, Dennis Michael; and Bazin, Lucas John, 4,064,541, Cl. 358-153.000.
Seer, Harold George, Jr., 4,064,529, Cl. 358-29.000.
Realisations Ultrasoniques: *See—*
Dory, Jacques, 4,063,451, Cl. 73-618.000.
Rech, Reiner: *See—*
Volz, Dieter; Buchscheidt, Kurt; and Rech, Reiner, 4,063,990, Cl. 156-580.200.
Redman, Charles M. Ferrofluidic electrical generator. 4,064,409, Cl. 310-306.000.
Reeves, George I.: *See—*
Morales, Michael John; and Reeves, George I., 4,064,450, Cl. 324-15.000.
Regan, John F., to Wescom Switching, Inc. Electronic hybrid and hybrid repeater. 4,064,377, Cl. 179-170.0NC.
Reich, Walter: *See—*
Halpaap, Herbert; Reich, Walter; and Ripphahn, Johannes, 4,064,041, Cl. 210-31.00C.
Reichman, Steven H.: *See—*
Weaver, Don M.; and Reichman, Steven H., 4,063,939, Cl. 75-208.00R.
Reinhardt, Klaus: *See—*
Greinacher, Ekkehard; Reinhardt, Klaus; and Strnat, Karl, 4,063,971, Cl. 148-105.000.
Reis, Robert D., to United Electric Controls Company. Air pressure transducer. 4,064,476, Cl. 338-41.000.
Reisdorf, Daniel: *See—*
Farge, Daniel; Jossin, Alain; Ponsinet, Gerard; and Reisdorf, Daniel, 4,064,247, Cl. 424-258.000.
Reith, Timothy Martin: *See—*
Peressini, Peter Paul; Reith, Timothy Martin; and Sullivan, Michael James, 4,063,964, Cl. 148-1.500.
Rem Metals Corporation: *See—*
Brown, Robert A., 4,063,954, Cl. 106-38.300.
Renner, Alfred, to Ciba-Geigy AG. Process for the manufacture of urea-formaldehyde condensation polymers containing sulpho groups. 4,064,088, Cl. 260-29.300.
Republic Steel Corporation: *See—*
Kusner, Robert Ernest; and Muthig, Robert William, 4,063,930, Cl. 75-3.000.
Toth, James Michael, 4,064,452, Cl. 324-202.000.
Research Fuels, Inc.: *See—*
Ottenstein, Allan S., 4,064,555, Cl. 364-465.000.
Research Institute for Medicine and Chemistry Inc.: *See—*
Barton, Derek H. R.; and Hesse, Robert H., 4,064,148, Cl. 260-397.450.
Rexnord Inc.: *See—*
Lambert, Gerald G., 4,063,655, Cl. 214-62.00A.
Lambert, Gerald G., 4,063,656, Cl. 214-62.00A.
Reymond, Jean-Claude; d'Auria, Luigi; Le Guen, Benoit; and Rousseil, Gilbert, to Thomson-CSF. Method and tool for stripping ends of cables containing multiple conductors. 4,063,343, Cl. 29-427.000.
Reynolds Metals Company: *See—*
Scott, Irvin C.; Settle, Evan E., III; and Hickerson, Robert J., 4,063,732, Cl. 273-72.00A.
Rezabeck, Karel: *See—*
Semonsky, Miroslav; Cerny, Antonin; Krajcrova, Marie; Rezabeck, Karel; Auskova, Marie; Seda, Miroslav; Sevcik, Bohumil; and Kral, Josef, 4,064,130, Cl. 260-285.500.
Rheinecker, Tom Conrad: *See—*
Otten, Geneva Gail; and Rheinecker, Tom Conrad, 4,063,927, Cl. 71-94.000.
Rhoades, Richard G., to United States of America, Army. Apparatus for staged combustion in air augmented rockets. 4,063,415, Cl. 60-261.000.
Rhodes, David B., to United States of America, National Aeronautics and Space Administration. Optical scanner. 4,063,814, Cl. 356-28.000.
Rhodes, Marvin D.; and Mikulas, Martin M., Jr., to United States of America, National Aeronautics and Space Administration. Method of making a composite sandwich lattice structure. 4,063,981, Cl. 156-245.000.
Rhodia, Inc.: *See—*
Gallo, Michael A.; and Wang, Der-I, 4,064,237, Cl. 424-200.000.
Rhone-Poulenc Industries: *See—*
Bouy, Pierre; de Lachaux, Hubert; and Conan, Michel, 4,064,032, Cl. 204-270.000.
Daniel, Jean-Claude, 4,064,080, Cl. 260-8.000.
Farge, Daniel; Jossin, Alain; Ponsinet, Gerard; and Reisdorf, Daniel, 4,064,247, Cl. 424-258.000.
Gibard, Andre, 4,064,096, Cl. 260-37.0SB.
Rhone-Poulenc S.A.: *See—*
Bargain, Michel, 4,064,192, Cl. 260-857.0UN.
Bargain, Michel, 4,064,193, Cl. 260-857.0PE.
Rhone-Poulenc-Textile: *See—*
Grellier, Rene, 4,063,688, Cl. 242-18.0DD.
Richard Wolf GmbH: *See—*
Hiltebrandt, Siegfried, 4,063,796, Cl. 350-70.000.
Richards, Mildred C.: *See—*
Samour, Carlos M.; and Richards, Mildred C., 4,064,091, Cl. 260-29.6HN.
Richardson-Merrell Inc.: *See—*
Fleming, Robert W.; Sill, Arthur D.; Albrecht, William L.; and Horgan, Stephen W., 4,064,347, Cl. 544-79.000.
Richter Gedeon Vegyeszeti Gyar Rt.: *See—*
Mago nee Karacsony, Erzsebet; Borsi, Jozsef; Csanyi, Endre; Pik, Katalin; and Wolf, Lajos, 4,064,249, Cl. 424-261.000.

Toth, Edit; Torley, Jozsef; Palosi, Eva; Szeberenyi, Szaboles; Szporny, Laszlo; Gorog, Sandor; and Meszaros, Csilla, 4,064,121, Cl. 260-239.00B.
Ricoh Co., Ltd.: *See—*
Yamada, Isao; and Shibata, Isamu, 4,064,443, Cl. 318-331.000.
Riddle, John L., to Continental Oil Company. Preparation of secondary alkanol alkoxylates. 4,064,182, Cl. 260-615.00B.
Rieger, Hansjorg, Dr.; Kess, Leo; and Holzwarth, Dietmar. Tire chain. 4,063,583, Cl. 152-241.000.
Rieger, Klaus; Stetter, Karl-Heinz; and Wildgruber, Josef, to Hoechst Aktiengesellschaft. Process for the manufacture of waxes for carbon paper. 4,064,149, Cl. 260-406.000.
Riepe, Waldemar. Flexible, oscillating blade liquid pump. 4,063,826, Cl. 417-410.000.
Riley, George R.: *See—*
Hill, Terrance E.; and Riley, George R., 4,063,454, Cl. 73-141.00A.
Rinnai Kabushiki Kaisha: *See—*
Naito, Susumu, 4,063,873, Cl. 431-328.000.
Ripphahn, Johannes: *See—*
Halpaap, Herbert; Reich, Walter; and Ripphahn, Johannes, 4,064,041, Cl. 210-31.00C.
Risdon Manufacturing Company, The: *See—*
Meetze, Murray O'Neil, Jr., 4,063,664, Cl. 222-70.000.
Ritter, Gerhard: *See—*
Gott, Hans; Ritter, Josef; Ritter, Klaus; and Ritter, Gerhard, 4,064,385, Cl. 219-56.000.
Ritter, Josef: *See—*
Gott, Hans; Ritter, Josef; Ritter, Klaus; and Ritter, Gerhard, 4,064,385, Cl. 219-56.000.
Ritter, Klaus: *See—*
Gott, Hans; Ritter, Josef; Ritter, Klaus; and Ritter, Gerhard, 4,064,385, Cl. 219-56.000.
Roach, Thomas Allen, to Service First, Inc. Squirrel cage rotor and method of making same. 4,064,410, Cl. 310-211.000.
Robert Bosch G.m.b.H.: *See—*
Gorille, Ingo; Borst, Wolfgang; Klotzner, Winfried; Ott, Karl; Moller, Heinz; Honig, Gunter; Kiencke, Uwe; Zechnall, Martin; Flaig, Ulrich; Schulz, Alfred; and Pagel, Ernst-Olav, 4,063,539, Cl. 123-117.00D.
Maisch, Wolfgang; Burkel, Rainer; Leroy, Jean Pierre; and Bonin, Andre, 4,064,482, Cl. 340-58.000.
Robertson, Lawrence C.: *See—*
Merritt, James A.; and Robertson, Lawrence C., 4,063,896, Cl. 23-254.00R.
Robinson, Alexander Kennedy. Puzzle apparatus. 4,063,736, Cl. 273-157.00R.
Robinson, John E.: *See—*
Drummond, Michael E.; and Robinson, John E., 4,063,662, Cl. 222-31.000.
Robinson, John William, to Kimball International, Inc. Method and apparatus for generating tone signals for a musical instrument. 4,063,484, Cl. 84-1.240.
Roby, Steven J.: *See—*
Murphy, Donald E.; and Roby, Steven J., 4,063,989, Cl. 156-453.000.
Rock, Frank C., to National Controls, Inc. Computing scale and method. 4,063,604, Cl. 177-25.000.
Rock, Steven L.: *See—*
Neely, James W.; and Rock, Steven L., 4,063,912, Cl. 55-74.000.
Rockware Glass Limited: *See—*
Wickstead, Clifford, 4,063,643, Cl. 209-82.000.
Roder, Frederick L. X-ray or gamma-ray examination device for moving objects. 4,064,440, Cl. 250-359.000.
Rodrigo, Jesus Marzo: *See—*
Rodrigo, Luis Marzo; and Rodrigo, Jesus Marzo, 4,064,221, Cl. 423-393.000.
Rodrigo, Luis Marzo; and Rodrigo, Jesus Marzo. Process for obtaining nitric acid of a concentration higher than the azeotropic concentration by means of the absorption of nitrogen oxides in water or diluted nitric acid. 4,064,221, Cl. 423-393.000.
Roeder, Erwin; and Steinbeck, Edmund, to U.S. Philips Corporation. Method of producing an optical fiber. 4,063,914, Cl. 65-2.000.
Roger, Michel; Sander, Nils Borje Lennart; and Brundin, Bo Ivar Jonny, to Svenska Aktiebolaget Bromsregulator. Device for discontinuing and automatically restoring the operational function of a spring brake actuator. 4,063,491, Cl. 92-130.00A.
Rogers, Wayne Finis: *See—*
Bluethman, Robert Glenn; McBride, Michael Eudell; and Rogers, Wayne Finis, 4,064,557, Cl. 364-900.000.
Roggenkamp, Ray Lawrence: *See—*
Neti, Radhakrishna Murty; and Roggenkamp, Ray Lawrence, 4,063,895, Cl. 23-232.00R.
Roggenstein, Edwin O.; and Manthiram, Chockalingam, to Burroughs Corporation. Decoder clutching system for minicomputers. 4,064,388, Cl. 235-61.00A.
Rohde, Wolfgang: *See—*
Beck, Kurt-Gunther; Rohde, Wolfgang; Stalherm, Dieter; and Kolitz, Volker, 4,064,017, Cl. 201-1.000.
Rohm and Haas Company: *See—*
Bayer, Horst O.; Swithenbank, Colin; and Yih, Roy Y., 4,063,929, Cl. 71-115.000.
Kollman, Carl J., 4,064,043, Cl. 210-40.000.
Kunin, Robert, 4,064,042, Cl. 210-40.000.
Lewis, Sheldon N.; and Haggard, Richard A., 4,064,161, Cl. 526-320.000.
Myers, Robert M.; Dunkelberger, David L.; and Carty, Daniel T., 4,064,197, Cl. 260-876.00R.
Neely, James W.; and Rock, Steven L., 4,063,912, Cl. 55-74.000.
Rohman, Terrance J., to Caterpillar Tractor Co. Spring-type fastener. 4,063,334, Cl. 24-213.00B.
Rollei-Werke Franke & Heidecke: *See—*
Sobotta, Reinhard, 4,063,465, Cl. 74-436.000.
Rolls-Royce Limited: *See—*
Amsbury, Clifford Roy; and Warren, Eric, 4,063,362, Cl. 33-147.00J.
Bhangu, Jagnandan Kumar, 4,064,300, Cl. 428-120.000.
Rolls-Royce (1971) Limited: *See—*
Simmons, Roy, 4,063,847, Cl. 415-200.000.
Roncato, Giordano, to Saint-Gobain Industries. Strand cutting apparatus. 4,063,479, Cl. 83-117.000.
Rongone, Ronald L., to Goodyear Tire & Rubber Company, The. Method of making a tire. 4,063,979, Cl. 156-123.00R.
Rosaen, Nancy Helen: *See—*
Rosaen, Nils O., 4,063,455, Cl. 73-228.000.
Rosaen, Nils O., to Rosaen, Nancy Helen, a part interest. Flow meter. 4,063,455, Cl. 73-228.000.
Rose, Sam, to Bio-Response, Inc. Method for the continuous mass in vitro suspension culture of cells. 4,064,006, Cl. 195-1.800.
Rosener, Maurice: *See—*
Warren, Benedict O.; and Rosener, Maurice, 4,063,384, Cl. 47-58.000.
Ross, Barry Clive; and Shroot, Braham, to Pfizer Inc. 7[(Carboxyoxiran-3-carboxamido)phenylacetamido]cephalosporin derivatives. 4,064,241, Cl. 424-246.000.
Roth, Michael; Bosch, Erhard; and Gluck, Herbert, to Wacker-Chemie GmbH. Hydrophobic compositions. 4,063,958, Cl. 106-308.00Q.
Rothe, Hans Joachim; Heinze, Helmut; Whitehead, Brian D.; and Priepke, Gunther, to Zimmer Aktiengesellschaft. Process for the continuous production of high molecular weight polyethylene terephthalate. 4,064,112, Cl. 260-75.00M.
Rother, Warren F. Fishing rod holder. 4,063,704, Cl. 248-515.000.
Roto-Swing, Inc.: *See—*
Little, Benjamin F., 4,063,388, Cl. 49-363.000.
Rousseil, Gilbert: *See—*
Reymond, Jean-Claude; d'Auria, Luigi; Le Guen, Benoit; and Rousseil, Gilbert, 4,063,343, Cl. 29-427.000.
Roussel UCLAF: *See—*
Coussediere, Daniel; and Gasc, Jean-Claude, 4,064,339, Cl. 536-17.000.
Rozhkov, Leonid Georgievich: *See—*
Gurkov, Konstantin Stepanovich; Nazarov, Nikolai Grigorievich; Cherednikov, Evgeny Nikolaevich; Plavskikh, Vladimir Dmitrievich; Rozhkov, Leonid Georgievich; Tkach, Khaim Berkovich; Grigoraschenko, Vladimir Alexandrovich; Kostylev, Alexandr Dmitrievich; Davydov, Vasily Georgievich; and Zuev, Valentin Alexeevich, 4,063,423, Cl. 61-53.620.
RPC Corporation: *See—*
Guthrie, Dale H., 4,063,770, Cl. 294-81.0SF.
Ruda, Ernest V.: *See—*
Schneider, Clayton J., Jr.; and Ruda, Ernest V., 4,063,515, Cl. 102-89.0CD.
Ruehle, William H., to Mobil Oil Corporation. Vertically directive arrays for marine seismic exploration. 4,064,479, Cl. 340-7.00R.
Ruff, David L.: *See—*
Stewart, Sherman A.; Snyder, Estel R.; and Ruff, David L., 4,063,395, Cl. 52-309.500.
Ruger, William B., to Sturm, Ruger & Co., Inc. Fore end assembly for a firearm. 4,063,379, Cl. 42-75.00D.
Ruse, Alois: *See—*
Becker, Wolf-Jurgen; and Ruse, Alois, 4,063,891, Cl. 23-230.0PC.
Russell, David B., to M & T Chemicals Inc. Method for preparing biologically active copolymers of triorganotin acrylates. 4,064,338, Cl. 526-230.000.
Russell, James B.; Zewe, James R.; and Fruhwald, John M., to Alliance Manufacturing Company, Inc., The. Receiver and decoder. 4,064,487, Cl. 340-168.00S.
Russell, Kenneth Foden; and Garner, Alex Victor, to Rank Organisation Limited, The. Vacuum stressed polymer film piezoelectric transducer. 4,064,375, Cl. 179-110.00A.
Ryder, Francis E.: *See—*
Thomas, Michael D.; and Ryder, Francis E., 4,063,556, Cl. 128-276.000.
Ryder International Corporation: *See—*
Thomas, Michael D.; and Ryder, Francis E., 4,063,556, Cl. 128-276.000.
Saab-Scania Aktiebolag: *See—*
Wallgard, Gunnar A., 4,063,699, Cl. 246-63.00R.
Saari, Albert L.; and Anderson, Ray H., to General Mills, Inc. Amino acid derivatives. 4,064,138, Cl. 548-344.000.
Sable, Claude: *See—*
Chardonneau, Joel; and Sable, Claude, 4,063,825, Cl. 417-343.000.
Sado, Ichiro: *See—*
Kishimoto, Jyuji; Sado, Ichiro; and Sano, Yuji, 4,064,398, Cl. 364-709.000.
Sadowski, Anthony J., to Nalco Chemical Company. Concentrated polymer emulsion as a cleaner and lubricant. 4,064,318, Cl. 428-543.000.
Saeki, Yoshifumi; and Uemura, Hiroki, to Pioneer Electronic Corporation. Video scrambler and descrambler apparatus. 4,064,536, Cl. 358-118.000.

Safe Rack, Inc.: *See—*
Gordon, Roger G., 4,063,629, Cl. 194-1.00K.
Saika, Daini; Yanagawa, Takuma; Mizuta, Masaaki; and Kadoya, Isamu, to Lion Fat and Oil Co., Ltd. Method of manufacturing sulfated cellulose. 4,064,342, Cl. 536-59.000.
Sailor, Robert A.: *See—*
Graven, Richard G.; and Sailor, Robert A., 4,064,037, Cl. 208-120.000.
Saint-Gobain Industries: *See—*
Roncato, Giordano, 4,063,479, Cl. 83-117.000.
Saisselin, Aureliano Luigi: *See—*
Theron, Pieter Paul Adriaan; Vissers, Adrianus Martinus; and Saisselin, Aureliano Luigi, 4,064,284, Cl. 426-626.000.
Saito, Katsuhide: *See—*
Murai, Hiromu; Ohata, Katsuya; Enomoto, Hiroshi; Chokai, Shoichi; Maehara, Mitsuhiro; Saito, Katsuhide; and Ozaki, Takayuki, 4,064,252, Cl. 424-266.000.
Saito, Shoichi, to Olympus Optical Co., Ltd. Tape cassettes having indications for blind use. 4,063,370, Cl. 35-35.00A.
Saito, Tokio: *See—*
Hirai, Koichi; Iwano, Yuji; Saito, Tokio; Hiraoka, Tetsuo; Kishida, Yukichi; and Nishimura, Takuzo, 4,064,137, Cl. 260-306.70C.
Saitoh, Seiichiroh; Kashiwagi, Masatoshi; and Marubayashi, Toshiaki, to Mitsui Petrochemical Industries Ltd. Glass fiber-reinforced poly(-tetramethylene terephthalate) resin composition. 4,064,098, Cl. 260-40.00R.
Sakai, Kiyoshi; Kojima, Koichi; Ide, Junya; and Kobayashi, Shinsaku, to Sankyo Company Limited. 9-Oxo-15 ϵ-hydroxy-20-alkylidene-prost-13(trans)-enoic acid derivatives. 4,064,351, Cl. 560-121.000.
Sakaki, Hiroshi; Shintani, Sotokichi; and Kuroda, Hidemi, to Kokusai Denshin Denwa Co. Ltd. Automatic equalizer having a coefficient matrix circuit. 4,064,397, Cl. 364-724.000.
Sakihara, Yoshinobu F.: *See—*
Gunewardena, Shelly J.; Glick, Leslie P.; and Sakihara, Yoshinobu F., 4,064,472, Cl. 336-65.000.
Sakurada, Nobuaki: *See—*
Mashimo, Yukio; Sakurada, Nobuaki; Ito, Tadashi; Ito, Fumio; Shinoda, Nobuhiko; and Murakami, Hiroyashu, 4,064,515, Cl. 354-23.00D.
Salmonson, Duane Leroy: *See—*
Larson, Spencer Brian; and Salmonson, Duane Leroy, 4,063,663, Cl. 222-52.000.
Salomon, Georges Pierre Joseph, to S.A. Ets Francois Salomon & Fils. Ski brake. 4,063,751, Cl. 280-605.000.
Salvarezza, Robert M. Ring buoy with automatic separation of smoke signal buoy from strobe light buoy. 4,063,323, Cl. 9-14.000.
Salvatori, Tito: *See—*
Cucinella, Salvatore; Cesari, Marco; and Salvatori, Tito, 4,064,153, Cl. 260-448.00R.
Samour, Carlos M.; and Richards, Mildred C., to Kendall Co., The. Process of forming a polymeric emulsion which comprises copolymerizing in aqueous dispersion an ethylenically-unsaturated monomer containing quaternary nitrogen. 4,064,091, Cl. 260-29.6HN.
Sanda, Shougo; Inoue, Tokuta; Oishi, Kiyohiko; and Yamada, Toshio, to Toyota Jidosha Kogyo Kabushiki Kaisha. Apparatus for feeding water into the air/fuel mixture passage of an internal combustion engine. 4,063,536, Cl. 123-25.00J.
Sandels, Fred V.: *See—*
Fordyce, Gary L.; Hein, Richard D.; Sandels, Fred V.; and Britton, James E., 4,063,840, Cl. 404-69.000.
Sander Associates, Inc.: *See—*
Marler, Norman O., Jr.; and Mikulis, Benjamin M., Jr., 4,064,356, Cl. 174-68.500.
Sander, Nils Borje Lennart: *See—*
Roger, Michel; Sander, Nils Borje Lennart; and Brundin, Bo Ivar Jonny, 4,063,491, Cl. 92-130.00A.
Sanders, Robert J.: *See—*
Fuller, Robert T.; and Sanders, Robert J., 4,063,648, Cl. 211-45.000.
Sandoz, Inc.: *See—*
Kathawala, Faizulla G., 4,064,273, Cl. 424-340.000.
Nadelson, Jeffrey, 4,064,251, Cl. 424-263.000.
Papp, Eugene A., 4,064,246, Cl. 424-251.000.
Sandoz Ltd.: *See—*
Bachmayer, Helmut; and Schmidt, Gerhard, 4,064,232, Cl. 424-89.000.
Sorg, Dieter, 4,064,244, Cl. 424-250.000.
Sandstrom, Paul H.: *See—*
Lal, Joginder; and Sandstrom, Paul H., 4,064,335, Cl. 526-128.000.
Sandvik Aktiebolag: *See—*
Westberg, Alvar Torsten, 4,063,758, Cl. 285-177.000.
Sangamo Weston, Inc.: *See—*
Boreas, Willem J. L., 4,064,457, Cl. 324-150.000.
Panarello, Joseph A., 4,064,396, Cl. 364-573.000.
Sanka, Tsugio; and Shishido, Toshimasa, to Honda Giken Kogyo Kabushiki Kaisha. Accelerating pump actuating device for a caburetor. 4,064,201, Cl. 261-34.00A.
Sankyo Company Limited: *See—*
Hirai, Koichi; Iwano, Yuji; Saito, Tokio; Hiraoka, Tetsuo; Kishida, Yukichi; and Nishimura, Takuzo, 4,064,137, Cl. 260-306.70C.
Konotsune, Takuo; and Kawakubo, Katsuhiko, 4,063,925, Cl. 71-92.000.
Sakai, Kiyoshi; Kojima, Koichi; Ide, Junya; and Kobayashi, Shinsaku, 4,064,351, Cl. 560-121.000.
Sano, Yuji: *See—*
Kishimoto, Jyuji; Sado, Ichiro; and Sano, Yuji, 4,064,398, Cl. 364-709.000.
Santi, Luciano, to Officine Galileo Meccanotessile S.p.a. Photo-electrically operated weft feeler. 4,063,575, Cl. 139-370.200.
Santimauro, John Francis: *See—*
Gerson, Herman; Santimauro, John Francis; and Lerner, Lawrence Robert, 4,064,129, Cl. 260-279.0QA.
Santore, Michael. Hydro-pneumatic pipe, tube and drain cleaner. 4,063,317, Cl. 4-255.000.
Sasaki, Masato: *See—*
Mita, Yasuhiro; Uchino, Minoru; and Sasaki, Masato, 4,063,900, Cl. 23-288.00F.
Sasaki, Takehisa: *See—*
Masuda, Shunji; Oyama, Yoshinori; Tanaka, Hisao; Uchigasaki, Isao; and Sasaki, Takehisa, 4,064,111, Cl. 260-75.00M.
Sasaki, Toshio, to Brother Kogyo Kabushiki Kaisha. Automatic zigzag sewing machine. 4,063,525, Cl. 112-158.00A.
Sasamoto, Yoshifumi; and Iida, Masakazu, to Ikegsi Iron Works, Ltd.; and Ikegai Goss Co. Ltd. Papering apparatus in rotary printing press. 4,063,505, Cl. 101-228.000.
Sata, Naoyasu; Imaichi, Kensaku; and Hirose, Tatsuzo. Method and apparatus for producing high energy gaseous fluid substantially not containing physiologically harmful substances. 4,063,414, Cl. 60-39.050.
Sato, Akira: *See—*
Kitayama, Seishi; Sato, Akira; and Tamura, Junzo, 4,064,378, Cl. 179-170.200.
Sato, Kohei: *See—*
Yoshino, Hironori; and Sato, Kohei, 4,064,454, Cl. 324-54.000.
Sato, Masanobu, to Olympus Optical Co., Ltd. Coupling device for radio set and small size tape recorder. 4,064,374, Cl. 179-100.110.
Sato, Zenichi; Shimizu, Fumio; Kusano, Shoji; Takagi, Keiichiro; and Imamiya, Yoji, to Ihara Chemical Kogyo Kabushiki Kaisha. Process for the preparation of O,O-dialkyl-S-benzyl thiophosphates. 4,064,200, Cl. 260-979.000.
Satoh, Ryosuke: *See—*
Fujiwhara, Mitsuto; Endo, Takaya; Kikuchi, Shoji; and Satoh, Ryosuke, 4,063,950, Cl. 96-66.300.
Satterwhite, Charles R., to Unit Rig & Equipment Co. Conveyor folding and moldboard operation for excavating and loading systems. 4,063,375, Cl. 37-190.000.
Sauerteig, Wolfgang: *See—*
Himmelmann, Wolfgang; Sobek, Johannes; and Sauerteig, Wolfgang, 4,063,952, Cl. 96-111.000.
Saunders, Robert M.; and Kohler, George O., to United States of America, Agriculture. Preparation of protein concentrates from whey and seed products. 4,064,283, Cl. 426-583.000.
Savitsky, Evgeny Mikhailovich: *See—*
Smirnov, Viktor Sergeevich; Gryaznov, Vladimir Mikhailovich; Lebedeva, Valentina Ivanovna; Mischenko, Alexandr Petrovich; Polyakova, Victoria Petrovna; and Savitsky, Evgeny Mikhailovich, 4,064,188, Cl. 260-672.00R.
Sawa, Tsuna: *See—*
Iwasaki, Kenji; Sawa, Tsuna; and Hijikata, Sotaro, 4,064,411, Cl. 313-32.000.
Saylor, William H.; and Narey, James O., to Associated Data Concepts. Positioning control system for alphanumeric displays. 4,064,502, Cl. 340-324.00R.
Saylor, William H.; and Narey, James O., to Associated Data Concepts. Changeable printed alphanumeric display module. 4,064,503, Cl. 340-325.000.
Sced, Ian Robert: *See—*
McLean, John Walford; and Sced, Ian Robert, 4,064,311, Cl. 428-434.000.
Schaeffer, James Robert: *See—*
Harris, Harry Wayne; Schaeffer, James Robert; and Snoke, Roy Eugene, 4,064,010, Cl. 195-62.000.
Schaffner, Carl P.: *See—*
Gordon, Harry W.; and Schaffner, Carl P., 4,064,230, Cl. 424-19.000.
Scheiber, Robert: *See—*
Freudenschuss, Otto; Keznickl, Eduard; and Scheiber, Robert, 4,064,520, Cl. 354-196.000.
Scheithauer, Eric A.: *See—*
Splitt, Frank G.; and Scheithauer, Eric A., 4,063,339, Cl. 29-25.150.
Schenk, Peter, to Dzus Fastener Co., Inc. Clip receptacle. 4,063,335, Cl. 24-221.00R.
Schiffarth, Josef; Lorkin, Clive Graham; and Fletcher, Kenneth John, to Foseco International Limited. Protection of carbon electrodes. 4,063,931, Cl. 75-10.00R.
Schillreff, George H.: *See—*
Carter, William M.; Klauschie, Robert W.; and Schillreff, George H., 4,063,485, Cl. 89-1.816.
Schirmer, Henry G.: *See—*
Bornstein, Norman D.; d'Entremont, Donald J.; Weinberg, Alan S.; Schirmer, Henry G.; and Sun, Joseph Zu, 4,064,296, Cl. 428-35.000.
Schissler, Lloyd R.: *See—*
Edelberg, Murray; Bonn, Theodore H.; and Schissler, Lloyd R., 4,064,556, Cl. 364-900.000.
Schmid Laboratories, Inc.: *See—*
Gordon, Harry W.; and Schaffner, Carl P., 4,064,230, Cl. 424-19.000.
Schmid, Rolf; and Kreibich, Ursula, to Ciba-Geigy Corporation. Heat store and installation for the utilization of solar energy. 4,063,546, Cl. 126-271.000.

Schmidt, Gerhard: *See—*
Bachmayer, Helmut; and Schmidt, Gerhard, 4,064,232, Cl. 424-89.000.
Schmidt, Gunter: *See—*
Koerner, Gotz; Schmidt, Gunter; Langner, Jaroslav; and Patzke, Hans-Jurgen, 4,064,057, Cl. 252-8.600.
Schmidt, Henry, Jr., to Industrial Filter & Pump Mfg. Co. Filter cake removal method and apparatus. 4,064,045, Cl. 210-81.000.
Schmidt, Oskar; Grunner, Erich; Tompich, Horst; Lenk, Gerhard; and Drum, Adam, to Polyair Maschinebau GmbH. Tire mold. 4,063,861, Cl. 425-542.000.
Schmidt, Richard H. Hitch for ganging lawn mowers. 4,063,748, Cl. 280-411.00C.
Schmidt, Stanley J., to SmithKline Corporation. 7-Acylamino-3-[1-(2,3-dihydroxypropyl)tetrazole-5-ylthiomethyl]-3-cephem-4-carboxylic acids. 4,064,242, Cl. 424-246.000.
Schmitt, Frederick Louis: *See—*
Hall, John B.; Sprecker, Mark A.; Schmitt, Frederick Louis; and Vock, Manfred Hugo, 4,064,281, Cl. 426-538.000.
Light, Kenneth K.; Vock, Manfred Hugo; Shuster, Edward J.; and Schmitt, Frederick Louis, 4,064,184, Cl. 260-617.00R.
Schmitt, Robert A.: *See—*
Neth, Otto; and Schmitt, Robert A., 4,063,632, Cl. 198-374.000.
Schmitz, Lawrence S., to Westinghouse Electric Corporation. Noise generator circuit for a security system. 4,064,507, Cl. 340-384.00E.
Schneider, Abraham; and Janoski, Edward J., to Sun Ventures, Inc. Alkyl ethers of Binor-S. 4,064,180, Cl. 260-611.00F.
Schneider, Barry; and Bernard, Steven, to Chemtrust Industries Corporation. Supply container and dispensing unit assembly. 4,063,665, Cl. 222-129.000.
Schneider, Clayton J., Jr.; and Ruda, Ernest V., to Calspan Corporation. Dispersive subprojectiles for chaff cartridges. 4,063,515, Cl. 102-89.0CD.
Schneider, Dennis Michael; and Bazin, Lucas John, to RCA Corporation. Constant pulse width sync regenerator. 4,064,541, Cl. 358-153.000.
Schoenafinger, Eduard; Schwarzmann, Matthias; and Koester, Eberhard, to Badische Anilin- & Soda-Fabrik, Aktiengesellschaft. Manufacture of cobalt-modified γ-iron(III)oxides. 4,064,292, Cl. 427-132.000.
Schoenholz, Daniel: *See—*
Mackay, Donald A. M.; Clark, K. Warren; Witzel, Frank; and Schoenholz, Daniel, 4,064,274, Cl. 426-3.000.
Scholz, Heinrich; Decker, Martin; and Neumayr, Franz, to BASF Aktiengesellschaft. Removal of phosgene from off-gases. 4,064,218, Cl. 423-240.000.
Schottker, Willi: *See—*
Wahlmann, Ernst; and Schottker, Willi, 4,063,776, Cl. 297-361.000.
Schramm, Jurgen: *See—*
Sirrenberg, Wilhelm; Schramm, Jurgen; Klauke, Erich; Hammann, Ingeborg; and Stendel, Wihelm, 4,064,267, Cl. 424-304.000.
Schreiber, Richard H.: *See—*
Nettleton, Donald E., Jr.; Bush, James A.; Bradner, William T.; and Schreiber, Richard H., 4,064,014, Cl. 195-96.000.
Schreiber, William L.: *See—*
Withycombe, Donald Arthur; Hruza, Anne; Vock, Manfred Hugo; Giacino, Christopher; Mookherjee, Braja Dulal; Pittet, Alan Owen; and Schreiber, William L., 4,064,279, Cl. 426-535.000.
Schrempp, Ernst; and Hazelton, Henry S., Jr., to Pitney-Bowes, Inc. Photoconductor support drum for photocopy machine. 4,063,809, Cl. 355-3.0DR.
Schreyer, Kenneth D.: *See—*
Benton, Reuben Paul; and Schreyer, Kenneth D., 4,063,413, Cl. 59-35.0CP.
Schubeler, Kenneth Erwin; Carnahan, Danny L.; and O'Keefe, Dennis Grover, to Cincinnati Milacron Inc. Machine control system employing a programmable machine function controller. 4,064,395, Cl. 364-107.000.
Schuermeyer, Fritz L.; and Young, Charles R. Virtually nonvolatile random access memory cell. 4,064,492, Cl. 365-184.000.
Schuessler, John C.; Nelsen, Marvin G.; and Tapp, David J., to Leach Corporation. Electromagnetic relay. 4,064,471, Cl. 335-229.000.
Schuler, Victor J.: *See—*
Downs, Dallas I.; Larson, Lory E.; and Schuler, Victor J., 4,064,048, Cl. 210-160.000.
Schulz, Alfred: *See—*
Gorille, Ingo; Borst, Wolfgang; Klotzner, Winfried; Ott, Karl; Moller, Heinz; Honig, Gunter; Kiencke, Uwe; Zechnall, Martin; Flaig, Ulrich; Schulz, Alfred; and Pagel, Ernst-Olav, 4,063,539, Cl. 123-117.00D.
Schulz, Hans Peter: *See—*
Wollweber, Hartmund; Niemers, Ekkehard; Schulz, Hans Peter; Thomas, Herbert; and Andrews, Peter, 4,064,270, Cl. 424-324.000.
SCHUMAG Schumacher Metallwerke Gesellschaft mit beschrankter Haftung: *See—*
Wetzels, Walter, 4,063,906, Cl. 51-289.00R.
Schutte, Horst: *See—*
Mayer, Hubert; and Schutte, Horst, 4,064,011, Cl. 195-65.000.
Schwab, Hermann: *See—*
Faulhaber, Gerhard; Fuetterer, Hugo; Petersen, Harro; and Schwab, Hermann, 4,063,879, Cl. 8-2.50A.
Schwab Safe Co., Inc.: *See—*
Miller, Norman, 4,063,436, Cl. 70-133.000.
Schwander, Hansrudolf: *See—*
Loew, Peter; Schwander, Hansrudolf; and Kristinsson, Haukur, 4,064,136, Cl. 260-304.00C.
Schwartz, Judd Leonard; and Mayer, Richard Eugene, to Allied Chemical Corporation. Flame-retardant polyamide fiber for use in carpets. 4,064,298, Cl. 428-95.000.
Schwarzmann, Matthias: *See—*
Schoenafinger, Eduard; Schwarzmann, Matthias; and Koester, Eberhard, 4,064,292, Cl. 427-132.000.
Schweiger, Barry: *See—*
Simon, Theodore, 4,064,508, Cl. 340-409.000.
Schweiss, Clifford E. Heater attachment for L.P. gas container. 4,063,876, Cl. 432-222.000.
Schweitzer, Russell A. Clothespin. 4,063,333, Cl. 24-137.00A.
Schweizer, Ernst: *See—*
Varsanyi, Denis V.; Aufderhaar, Ernst; and Schweizer, Ernst, 4,064,265, Cl. 424-300.000.
Science Union et Cie, Societe Francaise de Recherche Medicale: *See—*
Beregi, Laszlo; Hugon, Pierre; Duhault, Jacques; and Boulanger, Michelle, 4,064,245, Cl. 424-250.000.
SCM Corporation: *See—*
DuRoss, Robert M.; and Aiken, Richard D., 4,063,631, Cl. 197-142.000.
Evans, James M.; and Stevenson, Donald R., 4,064,194, Cl. 260-859.00R.
Oroshnik, William, 4,064,162, Cl. 560-234.000.
Oroshnik, William, 4,064,183, Cl. 260-617.00A.
Scotchmer, Stephen R.; and MacGregor, Robert D., to Bay Mills Limited. Substantially closed fabric made by compressive redistribution of the filaments of at least some yarns of an open mesh fabric. 4,064,306, Cl. 428-255.000.
Scott, Irvin C.; Settle, Evan E., III; and Hickerson, Robert J., to Reynolds Metals Company. Ball bat. 4,063,732, Cl. 273-72.00A.
Scott Paper Company: *See—*
Grossman, Stephen Richard, 4,063,995, Cl. 162-112.000.
Lazorisak, Nicholas W.; Christiansen, Fredric A.; and Harriz, John M., 4,064,213, Cl. 264-134.000.
Sears, Karl David; and Casebier, Ronald Leroy, to International Telephone and Telegraph Corporation. Etherification of bark extracts. 4,064,166, Cl. 260-511.000.
Seda, Miroslav: *See—*
Semonsky, Miroslav; Cerny, Antonin; Krajcrova, Marie; Rezabeck, Karel; Auskova, Marie; Seda, Miroslav; Sevcik, Bohumil; and Kral, Josef, 4,064,130, Cl. 260-285.500.
Seegmiller, David W.: *See—*
King, Lowell A.; Brabson, George D., Jr.; Erbacher, John K.; Seegmiller, David W.; Fannin, Armand A., Jr.; and Viola, John T., 4,064,327, Cl. 429-112.000.
Seer, Harold George, Jr., to RCA Corporation. Apparatus for automatic color balancing of color television signals. 4,064,529, Cl. 358-29.000.
Seilly, Alec Harry, to Lucas Industries Limited. Transformer with windings in helical slots of core. 4,064,473, Cl. 336-83.000.
Seino, Kuniki; and Kondo, Shoji, to Minolta Camera Kabushiki Kaisha. Electrophotographic copier. 4,063,811, Cl. 355-15.000.
Seki, Fumio; Oikado, Taizo; and Shintaku, Keiichi, to Nippon Electric Company, Ltd. Linearly polarizing internal mirror type gas laser tube. 4,064,466, Cl. 331-94.50D.
Sekiguchi, Kunio, to Tokyo Shibaura Denki Kabushiki Kaisha. Method of controlling tandem rolling mills. 4,063,438, Cl. 72-6.000.
Selivanov, Mikhail Prokhorovich: *See—*
Sosulnikov, Gleb Borisovich; Fomichev, Vladimir Mikhailovich; Tsiporina, Ljudmila Alexandrovna; Selivanov, Mikhail Prokhorovich; Bobrakov, Lev Vladimirovich; Axenov, Alexandr Sergeevich; Alexandrov, Dmitry Vladimirovich; Ugrjumov, Maxim Semenovich, deceased; Ugrjumova, Raida Nikolaevna, administratrix; Ugrjumov, Nikolai Maximovich, administrator; and Tjumina, Lidia Maximovna, administratrix, 4,063,568, Cl. 137-270.000.
Semonsky, Miroslav; Cerny, Antonin; Krajcrova, Marie; Rezabeck, Karel; Auskova, Marie; Seda, Miroslav; Sevcik, Bohumil; and Kral, Josef, to SPOFA, Pharmaceutical Works. Nβ-substituted 8-β-aminoethylergolin-I derivatives and their manufacture. 4,064,130, Cl. 260-285.500.
Semsel, Andrew Milo: *See—*
Rauhut, Michael McKay; and Semsel, Andrew Milo, 4,064,064, Cl. 252-188.3CL.
Serban, Alexander; Warner, Richard Burridge; and Alcock, Keith Thomas, to ICI Australia Limited. S-methyl 3-furfurylidene-2-methyl-dithiocarbazate and its use as a fungicide. 4,064,262, Cl. 424-285.000.
Sergeev, Vladimir Alexandrovich: *See—*
Korshak, Vasily Vladimirovich; Gribova, Irina Alexandrovna; Krasnov, Alexandr Petrovich; Teplyakov, Mikhail Mikhailovich; Elerdashvili, Georgy Vasilievich; Gureeva, Galina Ilinichna; Chebotarev, Valery Panteleimonovich; Dvorikova, Raisa Alexeevna; Sergeev, Vladimir Alexandrovich; and Kakauridze, Dali Mitrofanovna, 4,064,097, Cl. 260-37.00R.
Service First, Inc.: *See—*
Roach, Thomas Allen, 4,064,410, Cl. 310-211.000.
Settle, Evan E., III: *See—*
Scott, Irvin C.; Settle, Evan E., III; and Hickerson, Robert J., 4,063,732, Cl. 273-72.00A.
Seufert, Gerhard. Process for forming flexible fold lines in thermoplastic sheets. 4,064,206, Cl. 264-26.000.

Sevcik, Bohumil: *See—*
Semonsky, Miroslav; Cerny, Antonin; Krajcrova, Marie; Rezabeck, Karel; Auskova, Marie; Seda, Miroslav; Sevcik, Bohumil; and Kral, Josef, 4,064,130, Cl. 260-285.500.
Shackle, Dale Richard; and Young, Ainslie Thomas, Jr., to Mead Corporation, The. Process for the production of pressure sensitive carbonless record sheets using novel hot melt systems and products thereof. 4,063,754, Cl. 282-27.500.
Shah, Hemendra K.; and Turner, William G., to Vertipile, Inc. Method for registering anode and cathode layers on a web. 4,064,288, Cl. 427-58.000.
Shaner, Richard B.: *See—*
Compton, Wayne W.; and Shaner, Richard B., 4,064,432, Cl. 362-457.000.
Shapland, Earl P.; and Shapland, James T., to United States Steel Corporation. Ladle gate valve. 4,063,668, Cl. 222-512.000.
Shapland, James T.: *See—*
Shapland, Earl P.; and Shapland, James T., 4,063,668, Cl. 222-512.000.
Sharp Kabushiki Kaisha: *See—*
Kumata, Kiyoshi, 4,064,468, Cl. 331-116.00R.
Sharpe, Thomas Ray: *See—*
Cherkofsky, Saul Carl; and Sharpe, Thomas Ray, 4,064,260, Cl. 424-270.000.
Shaw, Robert F.; and Ghosh, Amal K., to Exxon Research & Engineering Co. High efficiency selenium heterojunction solar cells. 4,064,522, Cl. 357-16.000.
Shelburne Company, The: *See—*
Friedberg, Herbert L., 4,063,385, Cl. 47-58.000.
Shell Oil Company: *See—*
Verbrugge, Herman, 4,064,174, Cl. 260-586.00C.
Shenk, Walter James, to Bell Telephone Laboratories, Incorporated. Cable lubricator. 4,063,617, Cl. 184-15.00R.
Sherman, S.: *See—*
De Loach, Bernard Collins, Jr., 4,064,458, Cl. 325-54.000.
Shiba, Hiroshi, to Nippon Electric Company, Ltd. Method of manufacturing a semiconductor device. 4,063,901, Cl. 29-578.000.
Shibata, Isamu: *See—*
Yamada, Isao; and Shibata, Isamu, 4,064,443, Cl. 318-331.000.
Shields, J. Rodger, to Carrier Corporation. Power generating system employing geothermally heated fluid. 4,063,417, Cl. 60-641.000.
Shields, J. Rodger, to Carrier Corporation. Power producing system employing geothermally heated fluid. 4,063,418, Cl. 60-641.000.
Shier, John S., to Intersil, Inc. Integrated circuit having a buried load device. 4,064,527, Cl. 357-48.000.
Shilling, Robert A. Vehicle theft-prevention system. 4,063,610, Cl. 180-114.000.
Shimamura, Teruo; Fukami, Yoshio; and Mori, Hidetoshi, to Nippon Kogaku K.K. Chemical reaction velocity measuring apparatus. 4,063,817, Cl. 356-93.000.
Shimamura, Teruo: *See—*
Itoi, Nobuo; Shimamura, Teruo; Fukami, Yoshio; Mori, Hidetoshi; and Miwa, Kenji, 4,063,816, Cl. 356-93.000.
Shimizu, Fumio: *See—*
Sato, Zenichi; Shimizu, Fumio; Kusano, Shoji; Takagi, Keiichiro; and Imamiya, Yoji, 4,064,200, Cl. 260-979.000.
Shimizu, Isamu: *See—*
Fujioka, Tokio; Kinugasa, Masayuki; Iizumi, Shozo; Teshima, Shizuhiro; and Shimizu, Isamu, 4,063,935, Cl. 75-128.00C.
Shimoda, Takashi: *See—*
Akai, Shin-ichi; Mori, Hideki; Shimoda, Takashi; and Iguchi, Shin-ichi, 4,063,972, Cl. 148-171.000.
Shimoyama, Kunio: *See—*
Maitani, Yoshihisa; Shimoyama, Kunio; Yoshida, Muneaki; Hashimoto, Akihiko; and Kitagawa, Masahiro, 4,064,517, Cl. 354-51.000.
Shinoda, Nobuhiko: *See—*
Mashimo, Yukio; Sakurada, Nobuaki; Ito, Tadashi; Ito, Fumio; Shinoda, Nobuhiko; and Murakami, Hiroyashu, 4,064,515, Cl. 354-23.00D.
Shinoura, Daisuke: *See—*
Hazama, Kenichi; Hirose, Isamu; Yasue, Kenji; and Shinoura, Daisuke, 4,064,196, Cl. 260-860.000.
Shinozaki, Satoshi: *See—*
Tokumaru, Yukuya; Nakai, Masanori; Shinozaki, Satoshi; Nakamura, Junichi; Ito, Shintaro; and Nishi, Yoshio, 4,064,526, Cl. 357-46.000.
Shintaku, Keiichi: *See—*
Seki, Fumio; Oikado, Taizo; and Shintaku, Keiichi, 4,064,466, Cl. 331-94.50D.
Shintani, Sotokichi: *See—*
Sakaki, Hiroshi; Shintani, Sotokichi; and Kuroda, Hidemi, 4,064,397, Cl. 364-724.000.
Shionogi & Co., Ltd.: *See—*
Ogawa, Yasunao; and Yonetani, Yukio, 4,063,894, Cl. 23-230.00B.
Shiraishi, Takeichi: *See—*
Kuroda, Nobuyuki; Nakamura, Toru; Shiraishi, Takeichi; Matsuura, Kazuo; and Miyoshi, Mituji, 4,064,334, Cl. 526-119.000.
Shiseido Company, Ltd.: *See—*
Odate, Ryoji; and Haneda, Kazuo, 4,064,099, Cl. 260-42.180.
Shishido, Toshimasa: *See—*
Sanka, Tsugio; and Shishido, Toshimasa, 4,064,201, Cl. 261-34.00A.
Shito, Nobuhiko: *See—*
Yokoyama, Takashi; Miyadera, Yasuo; Shito, Nobuhiko; Suzuki, Hiroshi; and Wakashima, Yoshiaki, 4,064,289, Cl. 427-82.000.
Shiverdecker, James H., to Bergstein Packaging Trust. Orbital heat sealing apparatus and method. 4,063,983, Cl. 156-306.000.
Shiverdecker, James H.: *See—*
Bergstein, Frank David; Nerenberg, Robert W.; and Shiverdecker, James H., 4,063,403, Cl. 53-379.000.
Shivvers, Charles C. Sweep auger apparatus. 4,063,654, Cl. 214-17.0DA.
Shoemaker, Paul D.: *See—*
Sidebotham, Norman C.; Shoemaker, Paul D.; and Young, Clarence W., III, 4,064,079, Cl. 260-2.300.
Showalter, Dan Joseph, to Borg-Warner Corporation. Self-energizing anti-rattle device. 4,063,466, Cl. 74-574.000.
Shroot, Braham: *See—*
Ross, Barry Clive; and Shroot, Braham, 4,064,241, Cl. 424-246.000.
Shuster, Edward J.: *See—*
Light, Kenneth K.; Vock, Manfred Hugo; Shuster, Edward J.; and Schmitt, Frederick Louis, 4,064,184, Cl. 260-617.00R.
Shy, Min Ching. Folding means for supporting legs of roaster oven with high stability. 4,063,703, Cl. 248-439.000.
Sidebotham, Norman C.; Shoemaker, Paul D.; and Young, Clarence W., III, to Monsanto Company. Polyester polymer recovery. 4,064,079, Cl. 260-2.300.
Sidor, Edward F.; Camillo, Charles C.; and Bowen, Glenn W., to Illinois Tool Works Inc. Sensors for sensing a plurality of parameters. 4,064,497, Cl. 340-197.000.
Siegwart, Hans Rudolf; and Leeb, Dietmar, to Bureau BBR Ltd. Upset head at a high-strength tension wire and method for the production thereof. 4,064,319, Cl. 428-602.000.
Siemens Aktiengesellschaft: *See—*
Becker, Franz; and Jager, Philipp, 4,064,226, Cl. 423-657.000.
Graul, Jurgen; and Murrmann, Helmuth, 4,063,967, Cl. 148-1.500.
Knauer, Karl; and Pfleiderer, Hans Joerg, 4,064,491, Cl. 365-149.000.
Koubek, Michael, 4,064,531, Cl. 358-44.000.
Markwitz, Wernhard; and Dumichen, Volker, 4,064,459, Cl. 325-67.000.
Siemens-Albis Aktiengesellschaft: *See—*
Kupfer, Hanspeter, 4,064,467, Cl. 331-108.00D.
Signal Companies, Inc., The: *See—*
McKenna, Roger DeSalvo, 4,063,561, Cl. 128-351.000.
Silar Laboratories, Inc.: *See—*
Kruppa, Richard F.; and Coleman, Arthur Edward, 4,063,911, Cl. 55-67.000.
Silberschlag, Russell Earl: *See—*
Ivey, John Saxon; and Silberschlag, Russell Earl, 4,063,623, Cl. 192-3.310.
Sill, Arthur D.: *See—*
Fleming, Robert W.; Sill, Arthur D.; Albrecht, William L.; and Horgan, Stephen W., 4,064,347, Cl. 544-79.000.
Sillars, Frederick Stirling: *See—*
Gorini, Robert Francis; Johnson, Herbert; and Sillars, Frederick Stirling, 4,063,527, Cl. 118-5.000.
Sillion, Bernard: *See—*
Rabilloud, Guy; and Sillion, Bernard, 4,064,176, Cl. 260-590.00D.
Silverblatt, Bernard L.: *See—*
Desmarchais, Walter E.; Katz, Leonard R.; and Silverblatt, Bernard L., 4,064,002, Cl. 176-38.000.
Silverman, Daniel. Control means for pressure fluid vibrators for generating seismic waves in the earth. 4,063,613, Cl. 181-119.000.
Silverman, Daniel. Vibrator and processing systems for vibratory seismic operations. 4,064,481, Cl. 340-15.5TA.
Simmons, Roy, to Rolls-Royce (1971) Limited. Gas turbine engine casing. 4,063,847, Cl. 415-200.000.
Simon, Theodore, to Simon, Theodore; and Schweiger, Barry. Alarm system including remote signalling means. 4,064,508, Cl. 340-409.000.
Simonton, Robert D.: *See—*
Badger, John P.; and Simonton, Robert D., 4,063,978, Cl. 156-82.000.
Simpson, Henry Wellington, to International Business Machines Corporation. Apparatus for neutralizing toner in a no charge exchange transfer. 4,063,808, Cl. 355-3.0TR.
Simpson, James W.; Cosgarea, Andrew, Jr.; and Bankert, Richard D., to Franklin Mint Corporation. Silver color proof coin or medal and method of making the same. 4,063,346, Cl. 29-527.700.
Sindelar, Ernest C.: *See—*
Beck, Henry E.; Hasten, Jimmie L.; and Sindelar, Ernest C., 4,063,624, Cl. 192-4.00A.
Singer, Alfred Richard Eric, to National Research Development Corporation. Spraying atomized particles. 4,064,295, Cl. 427-424.000.
Singer Company, The: *See—*
Fromknecht, Charles T., 4,063,326, Cl. 15-327.00R.
Singhal, Gopal H.; Gorbaty, Martin L.; Minday, Richard M.; and Li, Norman N. Sour water treating process utilizing liquid membranes having a sulfonated polymer exterior oil phase. 4,064,040, Cl. 210-22.00R.
Sioda, Hidematu: *See—*
Minami, Toshimi; and Sioda, Hidematu, 4,063,710, Cl. 251-248.000.
Sirrenberg, Wilhelm; Schramm, Jurgen; Klauke, Erich; Hammann, Ingeborg; and Stendel, Wihelm, to Bayer Aktiengesellschaft. 2',3,6'-Trichloro-4-cyano-4'-[N-(N'-(o-substituted-benzoyl))-ureido]-diphenyl ether insecticides. 4,064,267, Cl. 424-304.000.
Siskin, Michael; and Porcelli, Joseph J., to Exxon Research & Engineering Co. Process for reacting paraffinic hydrocarbons utilizing hydrogen, metal pentafluoride and hydrogen halide. 4,064,189, Cl. 260-676.00R.

Sivaramakrishnan, Parameswar: *See—*
Baron, Arthur L.; and Sivaramakrishnan, Parameswar, 4,064,195, Cl. 260-860.000.
Sivchev, Sivcho Hristov: *See—*
Vassilev, Vassil Ivanov; Goranov, Hristo Vladimirov; and Sivchev, Sivcho Hristov, 4,063,892, Cl. 23-230.00B.
Skala, Stephen F. Ink drop character line printer with traversing orifice band. 4,064,513, Cl. 346-75.000.
SKF Nova AB: *See—*
Lundgren, Bengt G. S., 4,063,942, Cl. 75-251.000.
Slater, John Walter: *See—*
Tomlin, Clive Dudley Spencer; Slater, John Walter; and Hartley, David, 4,063,926, Cl. 71-94.000.
Sliz, Edward; Brooks, John O.; and Gibson, Howard M., to United States of America, Army. Method and apparatus for RFI band replacement. 4,063,345, Cl. 29-522.000.
Sloyan, Jerome J., to Bishop, George W. Repetitive closed Rankine Cycle working fluid as motive power for prime mover. 4,063,420, Cl. 60-671.000.
Smets, Georges Joseph; and Van De Putte, Jacques Marie, to Agfa-Gevaert, N.V. Process for the manufacture of carboxylated polyethylenimines. 4,064,078, Cl. 260-2.0EN.
Smilow, George; and Kayen, Samuel L., to Berger & Gorin, Inc. Display belt hanger. 4,063,669, Cl. 223-87.000.
Smirnov, Viktor Sergeevich; Gryaznov, Vladimir Mikhailovich; Lebedeva, Valentina Ivanovna; Mischenko, Alexandr Petrovich; Polyakova, Victoria Petrovna; and Savitsky, Evgeny Mikhailovich. Method of dehydrogenation, dehydrocyclization and hydrodealkylation. 4,064,188, Cl. 260-672.00R.
Smith, Clyde, to Thomson-CSF Laboratories, Inc. System for stabilizing cathode ray tube operation. 4,064,417, Cl. 315-309.000.
Smith, Colin F. G.; Oldham, Ronald C.; Hedges, Michael J.; New, Alan J.; and Pearson, William, to International Standard Electric Corporation. Termination for connecting a submarine coaxial cable to a submergible housing. 4,064,358, Cl. 174-70.00S.
Smith, David L.; Frank, Cary; Lupton, Mary; and Lupton, Stephanie. Bedroll for convertible bed. 4,063,319, Cl. 5-334.00R.
Smith, Edward M., to Gorman-Rupp Company, The. Quick disconnect device for flexible tubes. 4,063,708, Cl. 251-149.400.
Smith, Frederick R., to Avtex Fibers Inc. Article and method for making high fluid-holding fiber mass. 4,063,558, Cl. 128-284.000.
Smith, Henry M. Podiatric insole. 4,063,562, Cl. 128-594.000.
SmithKline Corporation: *See—*
Schmidt, Stanley J., 4,064,242, Cl. 424-246.000.
Snam Progetti S.p.A.: *See—*
Cucinella, Salvatore; Cesari, Marco; and Salvatori, Tito, 4,064,153, Cl. 260-448.00R.
Neri, Carlo; and Perrotti, Emilio, 4,064,146, Cl. 260-348.160.
Snoke, Roy Eugene: *See—*
Harris, Harry Wayne; Schaeffer, James Robert; and Snoke, Roy Eugene, 4,064,010, Cl. 195-62.000.
Snyder, Estel R.: *See—*
Stewart, Sherman A.; Snyder, Estel R.; and Ruff, David L., 4,063,395, Cl. 52-309.500.
Snyder, Thomas A. Foldable cube forming geometric device. 4,063,725, Cl. 272-113.000.
Sobek, Johannes: *See—*
Himmelmann, Wolfgang; Sobek, Johannes; and Sauerteig, Wolfgang, 4,063,952, Cl. 96-111.000.
Sobotta, Reinhard, to Rollei-Werke Franke & Heidecke. Magazine feeding mechanism for dual slide projectors. 4,063,465, Cl. 74-436.000.
Societe Alsacienne de Mecaniques de Mulhouse: *See—*
Lotte, Andre, 4,063,501, Cl. 101-128.100.
Societe Anonyme Automobiles Citroen: *See—*
Durin, Michel, 4,063,871, Cl. 431-89.000.
S.A. des Anciens Etablissements Paul Wurth: *See—*
Mailliet, Pierre H., 4,063,722, Cl. 266-273.000.
S.A. Ets Francois Salomon & Fils: *See—*
Salomon, Georges Pierre Joseph, 4,063,751, Cl. 280-605.000.
Societe Anonyme Roure Bertrand Dupont: *See—*
Maupetit, Pierre; and Teisseire, Paul Jose, 4,064,060, Cl. 252-89.00R.
Pesnelle, Pierre; and Teisseire, Paul Jose, 4,064,181, Cl. 260-611.00F.
Societe Chimique des Charbonnages: *See—*
Domanski, Thadee, 4,064,546, Cl. 361-33.000.
Societe d'Assistance Technique pour Produits Nestle S.A.: *See—*
Gasser, Rupert J.; and Franklin, James G., 4,063,994, Cl. 159-49.000.
Kruseman, Jan, 4,064,119, Cl. 260-123.500.
Societe d'Etudes, Recherches et Constructions Electroniques - SERCEL: *See—*
Lepetit, Marc; Angelle, Philippe; Bodin, Jacques; and du Boisbaudry, Dominique, 4,064,504, Cl. 340-347.00P.
Societe Francaise d'Equipments pour la Navigation Aerienne: *See—*
Hoang, Don-Tri, 4,064,444, Cl. 318-561.000.
Societe Francaise d'Oxycatalyse: *See—*
Pomot, Jean Louis Emile, 4,064,073, Cl. 252-465.000.
Societe Generale de Macanique et de Metallurgie: *See—*
Chanton, Edmond, 4,063,433, Cl. 64-11.00R.
Societe Nationale Elf Aquitaine (Prod.): *See—*
Tramier, Bernard, 4,063,386, Cl. 47-58.000.
Societe Suisse pour l'Industrie Horlogere Management Services S.A.: *See—*
Huguenin, Raymond; Matthey, Hubert; and Voumard, Martial, 4,063,910, Cl. 51-413.000.
Soderquist, Frederick J.; Boyce, Harold D.; and Butts, William R., to Dow Chemical Company, The. Dehydrogenation catalysts. 4,064,187, Cl. 260-669.00R.
Sokol, Henry R.; and Sorwick, Jack R., to Picker Corporation. Strain detection apparatus and method for radiological equipment. 4,064,500, Cl. 340-267.00R.
Solitron Devices, Inc.: *See—*
Adams, Guy Emery; and MacPhedran, Donald Alexander, 4,064,474, Cl. 336-139.000.
Solomon, Donald F., to Jo-Line Tools, Inc. Silent ratchet. 4,063,626, Cl. 192-43.100.
Sony Corporation: *See—*
Hagiwara, Yoshiaki; and Yamazaki, Hiroshi, 4,064,524, Cl. 357-24.000.
Yamanaka, Seisuke, 4,064,532, Cl. 358-44.000.
Sorg, Dieter, to Sandoz Ltd. Organic compounds. 4,064,244, Cl. 424-250.000.
Sorice, Edward L.: *See—*
Barkley, George G.; and Sorice, Edward L., 4,063,842, Cl. 408-146.000.
Sorwick, Jack R.: *See—*
Sokol, Henry R.; and Sorwick, Jack R., 4,064,500, Cl. 340-267.00R.
Sosulnikov, Gleb Borisovich; Fomichev, Vladimir Mikhailovich; Tsiporina, Ljudmila Alexandrovna; Selivanov, Mikhail Prokhorovich; Bobrakov, Lev Vladimirovich; Axenov, Alexandr Sergeevich; Alexandrov, Dmitry Vladimirovich; Ugrjumov, Maxim Semenovich, deceased; by Ugrjumova, Raida Nikolaevna, administratrix; by Ugrjumov, Nikolai Maximovich, administrator; and by Tjumina, Lidia Maximovna, administratrix. Valve. 4,063,568, Cl. 137-270.000.
Southern California Edison Company: *See—*
Downs, Dallas I.; Larson, Lory E.; and Schuler, Victor J., 4,064,048, Cl. 210-160.000.
Southern Tool Mfg. Co., Inc.: *See—*
Triplette, Robert Eugene, 4,063,330, Cl. 16-142.000.
Sovitec S.A.: *See—*
De Vos, Daniel; Michel, Paul-Marie; and Berger, Alfred, 4,063,916, Cl. 65-21.000.
Spanel, Abram N. Haircutters featuring blade holding means. 4,063,353, Cl. 30-30.000.
Special Metals Corporation: *See—*
Weaver, Don M.; and Reichman, Steven H., 4,063,939, Cl. .75-208.00R.
Spectra-Physics, Inc.: *See—*
Hildebrand, Alfred P.; Morrow, Howard E.; and Jones, Henry W., 4,064,390, Cl. 235-470.000.
Wright, David L.; and Goldsborough, John P., 4,063,803, Cl. 350-319.000.
Speier, John L., to Dow Corning Corporation. Preparation of silylamine hydrochlorides. 4,064,155, Cl. 260-448.80R.
Spembly Limited: *See—*
Thomas, Ernest Hilton; and Evatt, Humphry Robert, 4,063,560, Cl. 128-303.100.
Sperling, Gerhard: *See—*
Alder, Wilfried; Huppertz, Josef; Latka, Herbert; and Sperling, Gerhard, 4,064,063, Cl. 252-135.000.
Sperry Rand Corporation: *See—*
Edelberg, Murray; Bonn, Theodore H.; and Schissler, Lloyd R., 4,064,556, Cl. 364-900.000.
Enkhaus, Roland Roger; and Evert, John Paul, 4,064,542, Cl. 358-245.000.
Graham, MacKellar K., 4,063,605, Cl. 177-225.000.
Lee, Robert W., 4,063,652, Cl. 214-6.00B.
McIlwain, Irwin D., 4,063,405, Cl. 56-208.000.
Spisak, Edward G. Retainer for wheel trim. 4,063,783, Cl. 301-37.00P.
Splitt, Frank G.; and Scheithauer, Eric A., to Cook Electric Company. Methods of assembling and mounting three-electrode gas tube arrester. 4,063,339, Cl. 29-25.150.
SPOFA, Pharmaceutical Works: *See—*
Semonsky, Miroslav; Cerny, Antonin; Krajcrova, Marie; Rezabeck, Karel; Auskova, Marie; Seda, Miroslav; Sevcik, Bohumil; and Kral, Josef, 4,064,130, Cl. 260-285.500.
Sprecher & Schuh AG: *See—*
Amsler, Joachim, 4,064,384, Cl. 200-144.00B.
Sprecker, Mark A.: *See—*
Hall, John B.; Sprecker, Mark A.; Schmitt, Frederick Louis; and Vock, Manfred Hugo, 4,064,281, Cl. 426-538.000.
Spyros, Theodoropulos: *See—*
Hedaya, Eddie; and Spyros, Theodoropulos, 4,064,151, Cl. 260-448.20N.
Staalkat B.V.: *See—*
deJong, Leendert Pieter; and Davidse, Jan, 4,063,822, Cl. 356-179.000.
Stackman, Robert W.; and Conciatori, Anthony B., to Celanese Corporation. High temperature polyurea resins. 4,064,107, Cl. 260-47.0CB.
Stahl, Otto, Jr., to National Manufacturing Company. Latched rod rack. 4,063,646, Cl. 211-4.000.
Stake, Esbjorn Ake, to Aktiebolaget Iggesunds Bruk. Adjustable guide for feeding benches for edging mills. 4,063,579, Cl. 144-246.00R.
Stalherm, Dieter: *See—*
Beck, Kurt-Gunther; Rohde, Wolfgang; Stalherm, Dieter; and Kolitz, Volker, 4,064,017, Cl. 201-1.000.

Stanley, Timothy Prescott. Display assembly and component parts therefore. 4,063,585, Cl. 160-135.000.
Stapp, Paul R.; and Brady, Donnie G., to Phillips Petroleum Company. Bromination of poly(arylene sulfides). 4,064,115, Cl. 260-79.100.
Stark, Wayne H.: *See—*
O'Neal, Leo; Stark, Wayne H.; and Hoium, Richard B., 4,063,331, Cl. 17-45.000.
Stark, William M.: *See—*
Hamill, Robert L.; Stark, William M.; and DeLong, Donald C., 4,064,233, Cl. 424-118.000.
Stary, Marvin L.; Brown, Edward L.; and Pridonoff, Eric L., to Clean Air Engineering, Inc. Vapor burning apparatus. 4,063,874, Cl. 431-350.000.
STEAG Aktiengesellschaft: *See—*
Kleeberg, Ulrich; Leimkuhler, Jurgen; Knospe, Jurgen; and Stohr, Manfred, 4,064,212, Cl. 264-117.000.
Stebbins, William J., to United States of America, Air Force. Radial optical encoder apparatus for shaft angle measurement. 4,064,435, Cl. 250-231.0SE.
Steimle, Wayne D. Water barrier to prevent seepage past pipes installed through a masonry wall. 4,063,759, Cl. 285-189.000.
Stein Industrie: *See—*
Deruelle, Jean, 4,063,870, Cl. 431-75.000.
Stein, Robert George; Couch, Terry Lee; and Crovetti, Aldo Joseph, to Abbott Laboratories. α-Trichloromethyl thenyl phenylethers and sulfides. 4,064,142, Cl. 260-332.30R.
Steinbeck, Edmund: *See—*
Roeder, Erwin; and Steinbeck, Edmund, 4,063,914, Cl. 65-2.000.
Steiner, Werner Douglas, to Du Pont de Nemours, E. I., and Company. Storage-stable quaternary styryl dye solutions. 4,063,882, Cl. 8-92.000.
Steingroever, Erich, to Magnetfabrik Bonn G.m.b.H. vormals Gewerkschaft Windhorst. Method of making permanent magnets. 4,063,970, Cl. 148-103.000.
Steinleitner, Wolfgang: *See—*
Sticht, Walter; and Steinleitner, Wolfgang, 4,063,642, Cl. 209-73.000.
Stellar Systems, Inc.: *See—*
Geiszler, Theodore D.; and Mongeon, Ronald W., 4,064,499, Cl. 340-258.00C.
Stendel, Wihelm: *See—*
Sirrenberg, Wilhelm; Schramm, Jurgen; Klauke, Erich; Hammann, Ingeborg; and Stendel, Wihelm, 4,064,267, Cl. 424-304.000.
Stephens, William W.; and McKeighen, James F., to Kawecki Berylco Industries, Inc. Heat treatment apparatus. 4,063,719, Cl. 266-130.000.
Sterzel, Hans-Josef: *See—*
Cordes, Claus; and Sterzel, Hans-Josef, 4,064,103, Cl. 260-45.90D.
Stetter, Karl-Heinz: *See—*
Rieger, Klaus; Stetter, Karl-Heinz; and Wildgruber, Josef, 4,064,149, Cl. 260-406.000.
Stevenson, Donald R.: *See—*
Evans, James M.; and Stevenson, Donald R., 4,064,194, Cl. 260-859.00R.
Stewart, Marvin A.: *See—*
Anderson, David K.; and Stewart, Marvin A., 4,064,054, Cl. 210-536.000.
Stewart, Sherman A.; Snyder, Estel R.; and Ruff, David L., to Grefco, Inc. Twin membrane, self sealing, mechanically fastened insulated roof deck system. 4,063,395, Cl. 52-309.500.
Sticht, Walter; and Steinleitner, Wolfgang. Apparatus for singling small parts. 4,063,642, Cl. 209-73.000.
Stifle, James D.: *See—*
Willmott, Colin Barns; and Stifle, James D., 4,064,404, Cl. 307-141.400.
Stockdale, Roy, to Napco Security Systems, Inc. Intrusion detection systems employing automatic sensitivity adjustments. 4,064,509, Cl. 340-411.000.
Stockman, Richard Franklin, to Air Preheater Company, Inc., The. Rotor construction. 4,063,587, Cl. 165-8.000.
Stohr, Manfred: *See—*
Kleeberg, Ulrich; Leimkuhler, Jurgen; Knospe, Jurgen; and Stohr, Manfred, 4,064,212, Cl. 264-117.000.
Stoll, James W., to Nalco Chemical Company. Aqueous solutions of alkali metal hydroxides. 4,064,065, Cl. 252-192.000.
Stone, W. Norman; and Falcone, Alfred S., to National Musical String Company. Method of making a wound musical instrument string. 4,063,674, Cl. 228-173.00E.
Stoulil, Arthur C.; and Stoulil, William G. Dye stabilized trisodium phosphate cleaning solution. 4,063,893, Cl. 23-230.00R.
Stoulil, William G.: *See—*
Stoulil, Arthur C.; and Stoulil, William G., 4,063,893, Cl. 23-230.00R.
Stratton, Boyd Lehman, to Arvin Industries, Inc. Recorder transducer mounting arrangement having a transducer holding plate movable along a mounting surface of a transducer carriage. 4,064,544, Cl. 360-99.000.
Stretanski, Joseph Anthony; and Grosso, Vincent Gerard, to American Cyanamid Company. Polymers stabilized by esters of phosphinodithioic acids. 4,064,106, Cl. 260-45.95C.
Strickland, C. Gene: *See—*
Edwards, Dalma Therman; and Strickland, C. Gene, 4,063,565, Cl. 134-104.000.
Strnat, Karl: *See—*
Greinacher, Ekkehard; Reinhardt, Klaus; and Strnat, Karl, 4,063,971, Cl. 148-105.000.

Stromberg-Carlson Corporation: *See—*
Altenburger, Otto, 4,064,372, Cl. 179-18.0DA.
Strong, Howard D. Bow adjuster. 4,063,833, Cl. 403-60.000.
Struble, Daniel P.: *See—*
McEvers, Dale L.; and Struble, Daniel P., 4,063,493, Cl. 93-58.20R.
Stuart, David H.: *See—*
Whitaker, Richard A.; and Stuart, David H., 4,063,752, Cl. 280-624.000.
Stuckmann, Dieter: *See—*
Jutte, Hans; and Stuckmann, Dieter, 4,063,425, Cl. 61-85.000.
Stuhmer, Werner: *See—*
Milkowski, Wolfgang; Zeugner, Horst; von Eickstedt, Klaus-Wolf; and Stuhmer, Werner, 4,064,128, Cl. 260-268.00R.
Stultz, Peter Franklin: *See—*
Latasiewicz, Leonard; and Stultz, Peter Franklin, 4,063,788, Cl. 312-7.00R.
Sturm, Ruger & Co., Inc.: *See—*
Ruger, William B., 4,063,379, Cl. 42-75.00D.
Stuy, Hans, to Diebold Incorporated. Saw enclosure construction. 4,063,478, Cl. 83-100.000.
Sud-Chemie AG: *See—*
Maier, Franz; and Peichl, Robert, 4,064,223, Cl. 423-522.000.
Suda, Masashi, to Canon Kabushiki Kaisha. Image transfer device. 4,063,724, Cl. 271-277.000.
Sullivan, Michael James: *See—*
Peressini, Peter Paul; Reith, Timothy Martin; and Sullivan, Michael James, 4,063,964, Cl. 148-1.500.
Sullivan, Patrick D. Hydrostatic drive vehicle. 4,063,608, Cl. 180-25.00R.
Sultan Products, Incorporated: *See—*
Veale, John R., 4,064,364, Cl. 179-1.00B.
Sumitomo Chemical Company, Limited: *See—*
Fukuba, Kozo; and Miyazaki, Minematsu, 4,064,317, Cl. 428-537.000.
Sumitomo Electric Industries, Ltd.: *See—*
Akai, Shin-ichi; Mori, Hideki; Shimoda, Takashi; and Iguchi, Shin-ichi, 4,063,972, Cl. 148-171.000.
Sun, Joseph Zu: *See—*
Bornstein, Norman D.; d'Entremont, Donald J.; Weinberg, Alan S.; Schirmer, Henry G.; and Sun, Joseph Zu, 4,064,296, Cl. 428-35.000.
Sun Oil Company of Pennsylvania: *See—*
Haseltine, Marcus W., Jr., 4,064,068, Cl. 252-364.000.
Sun, Park Hee: *See—*
Nagase, Ikuo; and Sun, Park Hee, 4,063,936, Cl. 75-141.000.
Sun Ventures, Inc.: *See—*
Schneider, Abraham; and Janoski, Edward J., 4,064,180, Cl. 260-611.00F.
Sunder, Shyam: *See—*
Peet, Norton P.; and Sunder, Shyam, 4,064,348, Cl. 544-137.000.
Suntech, Inc.: *See—*
Bushick, Ronald D., 4,064,072, Cl. 252-464.000.
Sutton, Robert John: *See—*
Wilde, Melvyn; and Sutton, Robert John, 4,063,702, Cl. 248-345.100.
Suzuki, Hiroshi: *See—*
Yokoyama, Takashi; Miyadera, Yasuo; Shito, Nobuhiko; Suzuki, Hiroshi; and Wakashima, Yoshiaki, 4,064,289, Cl. 427-82.000.
Svenska Aktiebolaget Bromsregulator: *See—*
Roger, Michel; Sander, Nils Borje Lennart; and Brundin, Bo Ivar Jonny, 4,063,491, Cl. 92-130.00A.
Svensson, Jan Axel. Method for evacuating and then collecting medium samples in containers sealed by a resilient stopper at substantially atmospheric pressure. 4,063,460, Cl. 73-425.600.
Sweeney, James Stevens, to Unisen, Inc. Blood pulse sensor and readout. 4,063,551, Cl. 128-2.05P.
Swenne, Lars Harry: *See—*
Elfwing, Erik Wiktor; and Swenne, Lars Harry, 4,064,332, Cl. 429-223.000.
Swithenbank, Colin: *See—*
Bayer, Horst O.; Swithenbank, Colin; and Yih, Roy Y., 4,063,929, Cl. 71-115.000.
Sygall, Peter Ivan: *See—*
Kuijer, William Lodewijk; Sygall, Peter Ivan; and Wennekes, Paulus Johannes, 4,064,291, Cl. 427-106.000.
Sylvachem Corporation: *See—*
Leavens, Dwight Earl; and Phillips, Claude Frank, Jr., 4,064,117, Cl. 260-97.600.
Synnott, Judson Bruce, III: *See—*
Coonce, Homer Eugene; Synnott, Judson Bruce, III; and Harty, Austin Thomas, deceased, 4,064,370, Cl. 179-15.0BA.
Syntex (U.S.A.) Inc.: *See—*
Ackrell, Jack, 4,064,141, Cl. 260-327.00B.
Berkoz, Belig M.; Lewis, Brian; and Muchowski, Joseph M., 4,064,135, Cl. 260-302.00S.
Berkoz, Belig M.; Lewis, Brian; and Unger, Stefan H., 4,064,257, Cl. 424-270.000.
Berkoz, Belig M.; Lewis, Brian; and Unger, Stefan H., 4,064,259, Cl. 424-270.000.
Lewis, Brian; Unger, Stefan H.; and Untch, Karl G., 4,064,258, Cl. 424-270.000.
Marx, Michael; and Kertesz, Denis John, 4,064,240, Cl. 424-241.000.
Szala, Lawrence E.: *See—*
Lee, Minyoung; Szala, Lawrence E.; and Hibbs, Louis E., Jr., 4,063,907, Cl. 51-295.000.

Szeberenyi, Szaboles: *See—*
Toth, Edit; Torley, Jozsef; Palosi, Eva; Szeberenyi, Szaboles; Szporny, Laszlo; Gorog, Sandor; and Meszaros, Csilla, 4,064,121, Cl. 260-239.00B.
Szego, Cynthia, administratrix: *See—*
Szego, Laszlo L., deceased, 4,063,687, Cl. 241-110.000.
Szego, Laszlo L., deceased (by Szego, Cynthia, administratrix), to General Comminution Inc. Comminution device. 4,063,687, Cl. 241-110.000.
Szporny, Laszlo: *See—*
Toth, Edit; Torley, Jozsef; Palosi, Eva; Szeberenyi, Szaboles; Szporny, Laszlo; Gorog, Sandor; and Meszaros, Csilla, 4,064,121, Cl. 260-239.00B.
Taira, Akio, to Olympus Optical Co., Ltd. Transmitted illumination device for microscopes. 4,063,797, Cl. 350-87.000.
Taisei Kensetsu Kabushiki Kaisha: *See—*
Chino, Nobuo, 4,063,651, Cl. 214-1.0BB.
Ishii, Yasuo; Nishimura, Naozumi; and Abe, Kohei, 4,063,510, Cl. 102-23.000.
Takada, Juichiro, to Takata Kojyo Co., Ltd. Shoulder safety belt retractor. 4,063,777, Cl. 297-388.000.
Takagi, Atsushi; Kuroiwa, Hiroyuki; Miyaguchi, Masao; Kawamura, Tateo; and Ishikawa, Yoshihiro, to Takenaka Komuten Co., Ltd. Device for constructing a foundation in soft soil formations. 4,063,424, Cl. 61-63.000.
Takagi, Keiichiro: *See—*
Sato, Zenichi; Shimizu, Fumio; Kusano, Shoji; Takagi, Keiichiro; and Imamiya, Yoji, 4,064,200, Cl. 260-979.000.
Takahashi, Yoshihiro: *See—*
Fukutani, Hideo; Miura, Konoe; Takahashi, Yoshihiro; and Torige, Kazuo, 4,063,953, Cl. 96-115.00R.
Takata Kojyo Co., Ltd.: *See—*
Takada, Juichiro, 4,063,777, Cl. 297-388.000.
Takeda Chemical Industries, Ltd.: *See—*
Miyano, Seiji; and Abe, Nobuhiro, 4,064,133, Cl. 260-293.790.
Takenaka Komuten Co., Ltd.: *See—*
Takagi, Atsushi; Kuroiwa, Hiroyuki; Miyaguchi, Masao; Kawamura, Tateo; and Ishikawa, Yoshihiro, 4,063,424, Cl. 61-63.000.
Takeuchi, Masaaki, to Allis-Chalmers Corporation. Cement making apparatus including preheater, kiln, cooler and auxiliary furnace. 4,063,875, Cl. 432-106.000.
Takezono, Takashi; and Ando, Hisashige, to Fujitsu Limited. Error correcting circuit arrangement using cube circuits. 4,064,483, Cl. 340-146.1AL.
Takigawa, Hiroyoshi, to Bridgestone Tire Company Limited. Flap for radial tires. 4,063,584, Cl. 152-365.000.
Takiguchi, Koichi; and Itami, Teruhiko, to Rank Xerox Ltd. Heat fixing member for electrophotographic copiers. 4,064,313, Cl. 428-447.000.
Talalay, Leon. Method of and apparatus for drying liquid from a liquid-solid composite and sealing the remaining solid material. 4,063,367, Cl. 34-15.000.
Tamai, Yasuo; and Osawa, Sadao, to Rank Xerox Ltd. Electrophotographic color reproduction process employing photoconductive material with dual light fatigue properties. 4,063,946, Cl. 96-1.200.
Tamura, Junzo: *See—*
Kitayama, Seishi; Sato, Akira; and Tamura, Junzo, 4,064,378, Cl. 179-170.200.
Tamura, Yoshikazu, to Fuji Xerox Co., Ltd. Method for exposing a light sensitive member. 4,063,813, Cl. 355-77.000.
Tanaka, Hisao: *See—*
Masuda, Shunji; Oyama, Yoshinori; Tanaka, Hisao; Uchigasaki, Isao; and Sasaki, Takehisa, 4,064,111, Cl. 260-75.00M.
Tanaka, Shigeo: *See—*
Matsushima, Yasunobu; Tanaka, Shigeo; and Niizuma, Akira, 4,063,968, Cl. 148-6.15R.
Tanigaki, Bunjiro: *See—*
Inohara, Shu; Nagamune, Yasuyuki; and Tanigaki, Bunjiro, 4,063,408, Cl. 57-58.540.
Tanquary, Albert Charles: *See—*
Cowsar, Donald Roy; and Tanquary, Albert Charles, 4,064,086, Cl. 260-29.20R.
Tansey, George. Rake. 4,063,407, Cl. 56-400.140.
Tapp, David J.: *See—*
Schuessler, John C.; Nelsen, Marvin G.; and Tapp, David J., 4,064,471, Cl. 335-229.000.
Taylor, Edward G. Board game apparatus. 4,063,734, Cl. 273-131.0AD.
Taylor, John D. Bridle bit sugar cube holder. 4,063,404, Cl. 54-8.000.
Taylor, Paul D., to Celanese Corporation. Production of tetrahydrofuran. 4,064,145, Cl. 260-346.110.
Technical Operations, Incorporated: *See—*
Bernstein, Kenneth L.; Considine, Philip S.; and Parrent, George B., Jr., 4,063,799, Cl. 350-162.0SF.
Technicon Instruments Corporation: *See—*
Beretsky, Irwin; and Lichtenstein, Bernard, 4,063,549, Cl. 128-2.00V.
Teichmann, Helmut: *See—*
Hupfl, Johann; Czermak, Manfred; Teichmann, Helmut; and Paul, Josef, 4,063,883, Cl. 8-116.00P.
Teijin Limited: *See—*
Inata, Hiroo; and Kawase, Shoji, 4,064,108, Cl. 260-47.00C.
Mukai, Atsuhiko; and Mori, Yoshio, 4,063,828, Cl. 401-96.000.
Teisseire, Paul Jose: *See—*
Maupetit, Pierre; and Teisseire, Paul Jose, 4,064,060, Cl. 252-89.00R.
Pesnelle, Pierre; and Teisseire, Paul Jose, 4,064,181, Cl. 260-611.00F.
Teledyne Electro-Mechanisms: *See—*
Dixon, Herbert; Heinrich, Walter; and Morris, Gilbert, 4,064,357, Cl. 174-68.500.
Temple, Rodger G.: *See—*
Babil, Simon; Claar, James A.; and Temple, Rodger G., 4,064,294, Cl. 427-373.000.
Tennant, Larrie A. Wood lathe tool holder. 4,063,577, Cl. 142-49.000.
Tennis-Tee, Inc.: *See—*
Bates, Ronald E., 4,063,730, Cl. 273-29.00A.
Teplyakov, Mikhail Mikhailovich: *See—*
Korshak, Vasily Vladimirovich; Gribova, Irina Alexandrovna; Krasnov, Alexandr Petrovich; Teplyakov, Mikhail Mikhailovich; Elerdashvili, Georgy Vasilievich; Gureeva, Galina Ilinichna; Chebotarev, Valery Panteleimonovich; Dvorikova, Raisa Alexeevna; Sergeev, Vladimir Alexandrovich; and Kakauridze, Dali Mitrofanovna, 4,064,097, Cl. 260-37.00R.
Terradex Corporation: *See—*
Ward, William J., III, 4,064,436, Cl. 250-253.000.
Terry, John Charles: *See—*
Oldroyd, Brian; Pentney, Harry; and Terry, John Charles, 4,063,354, Cl. 30-47.000.
Teshima, Shizuhiro: *See—*
Fujioka, Tokio; Kinugasa, Masayuki; Iizumi, Shozo; Teshima, Shizuhiro; and Shimizu, Isamu, 4,063,935, Cl. 75-128.00C.
Texaco Development Corporation: *See—*
Marquis, Edward T., 4,064,170, Cl. 260-570.00D.
Texaco Inc.: *See—*
Howlett, Donald L., 4,064,480, Cl. 340-15.5GC.
Jones, Henry B.; and Bunn, Dorrance P., Jr., 4,063,344, Cl. 29-455.00R.
McMahon, Matthew A., 4,064,175, Cl. 260-586.00P.
Nebzydoski, John W.; and Patmore, Edwin L., 4,064,059, Cl. 252-49.900.
Walker, Thad O.; and Walker, Clarence O., 4,064,056, Cl. 252-8.50C.
Texas Gas Transmission Corporation: *See—*
Lee, Rupert Archibald, 4,064,024, Cl. 204-157.10R.
Texas Instruments Incorporated: *See—*
Hon, Wai-Leung; and Patterson, Henry B., Jr., 4,064,408, Cl. 307-351.000.
Orcutt, John W., 4,063,682, Cl. 236-87.000.
Tubbs, Graham S., 4,064,554, Cl. 364-200.000.
Texasgulf Canada Ltd.: *See—*
Peters, Ernest, 4,063,933, Cl. 75-101.00R.
Textron, Inc.: *See—*
Wenzel, Robert H., 4,064,445, Cl. 318-578.000.
Wright, Donald R., 4,063,627, Cl. 192-131.00R.
Textured Yarn Co., Inc.: *See—*
Wyatt, William Kirk, 4,063,338, Cl. 28-221.000.
Th. Goldschmidt AG: *See—*
Greinacher, Ekkehard; Reinhardt, Klaus; and Strnat, Karl, 4,063,971, Cl. 148-105.000.
Koerner, Gotz; Schmidt, Gunter; Langner, Jaroslav; and Patzke, Hans-Jurgen, 4,064,057, Cl. 252-8.600.
Theiling, Louis Foster, Jr.: *See—*
Gibson, Charles Arnold; and Theiling, Louis Foster, Jr., 4,064,186, Cl. 260-618.00H.
Thelen, Bernd; Auge, Wolfgang; and Thiem, Karl-Werner, to Bayer Aktiengesellschaft. Process for the production of aromatic mononitro compounds. 4,064,147, Cl. 260-369.000.
Theron, Pieter Paul Adriaan; Vissers, Adrianus Martinus; and Saisselin, Aureliano Luigi, to CPC International Inc. Process for the debranning of wheat. 4,064,284, Cl. 426-626.000.
Thettu, Raghulinga Reddy; and Lin, Luke C., to Xerox Corporation. Image fixing. 4,063,530, Cl. 118-60.000.
Theurer, Josef, to Franz Plasser Bahnbaumaschinen-Industriegesellschaft m.b.H. Track surfacing. 4,063,516, Cl. 104-12.000.
Thiem, Karl-Werner: *See—*
Thelen, Bernd; Auge, Wolfgang; and Thiem, Karl-Werner, 4,064,147, Cl. 260-369.000.
Thiokol Corporation: *See—*
Bakken, Gordon J.; and Anderson, Richard A., 4,063,787, Cl. 308-26.000.
Thoma, Jozsef, to Ahl, Bernard. Control unit for moving the slide molds during the production of buildings. 4,063,857, Cl. 425-63.000.
Thomas, Ernest Hilton; and Evatt, Humphry Robert, to Spembly Limited. Cryosurgical instrument. 4,063,560, Cl. 128-303.100.
Thomas, Herbert: *See—*
Wollweber, Hartmund; Niemers, Ekkehard; Schulz, Hans Peter; Thomas, Herbert; and Andrews, Peter, 4,064,270, Cl. 424-324.000.
Thomas, Michael D.; and Ryder, Francis E., to Ryder International Corporation. Vacuum curettage device. 4,063,556, Cl. 128-276.000.
Thompson, Edward E., to American Components Inc. Metal foil resistor. 4,064,477, Cl. 338-51.000.
Thompson, James R. Apparatus for making crepes or the like. 4,063,497, Cl. 99-423.000.
Thomson-Brandt: *See—*
Broussaud, Georges, 4,064,538, Cl. 358-128.000.
Thomson-CSF: *See—*
Chabah, Maurice, 4,064,510, Cl. 343-7.500.
Huignard, Jean Pierre; Herriau, Jean Pierre; and Micheron, Francois, 4,063,795, Cl. 350-3.500.

Reymond, Jean-Claude; d'Auria, Luigi; Le Guen, Benoit; and Rousseil, Gilbert, 4,063,343, Cl. 29-427.000.
Thomson-CSF Laboratories, Inc.: *See*—
Smith, Clyde, 4,064,417, Cl. 315-309.000.
Thorogood, Robert Michael, to Air Products and Chemicals, Inc. Reversible heat exchanger or regenerator systems. 4,063,588, Cl. 165-97.000.
Thuillier, Jacques; and Hugo, Michel, to Acieries du Manoir Pompey. Heat resisting nickel-chromium alloy having high resistance to oxidation, carburization and creep at high temperatures. 4,063,934, Cl. 75-122.000.
Tiemeijer, Robert, to U.S. Philips Corporation. Generator for producing a sawtooth and a parabolic signal. 4,064,406, Cl. 307-228.000.
Tiep, Brian L. Method and apparatus for treating bronchial asthma. 4,063,550, Cl. 128-2.00R.
Timofeev, Nikolai Ivanovich: *See*—
Goltsov, Viktor Alexeevich; Timofeev, Nikolai Ivanovich; and Guschin, Sergei Grigorievich, 4,063,937, Cl. 75-172.00G.
Tjumina, Lidia Maximovna, administratrix: *See*—
Sosulnikov, Gleb Borisovich; Fomichev, Vladimir Mikhailovich; Tsiporina, Ljudmila Alexandrovna; Selivanov, Mikhail Prokhorovich; Bobrakov, Lev Vladimirovich; Axenov, Alexandr Sergeevich; Alexandrov, Dmitry Vladimirovich; Ugrjumov, Maxim Semenovich, deceased; Ugrjumova, Raida Nikolaevna, administratrix; Ugrjumov, Nikolai Maximovich, administrator; and Tjumina, Lidia Maximovna, administratrix, 4,063,568, Cl. 137-270.000.
Tkach, Khaim Berkovich: *See*—
Gurkov, Konstantin Stepanovich; Nazarov, Nikolai Grigorievich; Cherednikov, Evgeny Nikolaevich; Plavskikh, Vladimir Dmitrievich; Rozhkov, Leonid Georgievich; Tkach, Khaim Berkovich; Grigoraschenko, Vladimir Alexandrovich; Kostylev, Alexandr Dmitrievich; Davydov, Vasily Georgievich; and Zuev, Valentin Alexeevich, 4,063,423, Cl. 61-53.620.
Toa Nenryo Kogyo Kabushiki Kaisha: *See*—
Ueno, Hiroshi; Inaba, Naomi; Makishima, Tokuo; and Wada, Shozo, 4,064,069, Cl. 252-429.00B.
Tohoku Kinzoku Kogyo Kabushiki Kaisha: *See*—
Ishii, Yasuo; Nishimura, Naozumi; and Abe, Kohei, 4,063,510, Cl. 102-23.000.
Tokai Rika Denki Seisakusho K.K.: *See*—
Matsui, Iwao; and Ebisu, Yoshimitsu, 4,063,437, Cl. 70-358.000.
Tokumaru, Yukuya; Nakai, Masanori; Shinozaki, Satoshi; Nakamura, Junichi; Ito, Shintaro; and Nishi, Yoshio, to Tokyo Shibaura Electric Co., Ltd. I.I.L. with graded base inversely operated transistor. 4,064,526, Cl. 357-46.000.
Tokyo Seiko Rope Manufacturing Co., Ltd.: *See*—
Orihara, Sizuo, 4,063,711, Cl. 254-134.30R.
Tokyo Shibaura Denki Kabushiki Kaisha: *See*—
Sekiguchi, Kunio, 4,063,438, Cl. 72-6.000.
Tokyo Shibaura Electric Co., Ltd.: *See*—
Iwasaki, Kenji; Sawa, Tsuna; and Hijikata, Sotaro, 4,064,411, Cl. 313-32.000.
Kirita, Kei; Tsuji, Yasutaka; and Moriya, Takahiko, 4,063,973, Cl. 148-188.000.
Tokumaru, Yukuya; Nakai, Masanori; Shinozaki, Satoshi; Nakamura, Junichi; Ito, Shintaro; and Nishi, Yoshio, 4,064,526, Cl. 357-46.000.
Tolan, Peter John, to B. F. Goodrich Company, The. Hawser float assembly. 4,063,322, Cl. 9-8.00R.
Tom, Leung Chong; and Wong, Jun Kin. Golf club. 4,063,737, Cl. 273-174.000.
Tomlin, Clive Dudley Spencer; Slater, John Walter; and Hartley, David, to Imperial Chemical Industries Limited. Herbicidal methods and compositions using 3,5-dichloro-2,6-difluoro-4-hydroxypyridine or salts thereof. 4,063,926, Cl. 71-94.000.
Tomoe Technical Research Company: *See*—
Minami, Toshimi; and Sioda, Hidematu, 4,063,710, Cl. 251-248.000.
Tompich, Horst: *See*—
Schmidt, Oskar; Grunner, Erich; Tompich, Horst; Lenk, Gerhard; and Drum, Adam, 4,063,861, Cl. 425-542.000.
Tong, Frank C. Mail box signalling mechanism. 4,063,681, Cl. 232-34.000.
Toray Industries, Inc.: *See*—
Fujita, Seigoro; and Kitahori, Tojiro, 4,064,304, Cl. 428-207.000.
Torige, Kazuo: *See*—
Fukutani, Hideo; Miura, Konoe; Takahashi, Yoshihiro; and Torige, Kazuo, 4,063,953, Cl. 96-115.00R.
Torin Corporation: *See*—
O'Connor, John F., 4,063,852, Cl. 416-228.000.
Torley, Jozsef: *See*—
Toth, Edit; Torley, Jozsef; Palosi, Eva; Szeberenyi, Szaboles; Szporny, Laszlo; Gorog, Sandor; and Meszaros, Csilla, 4,064,121, Cl. 260-239.00B.
Toshin Seiki Kabushiki Kaisha: *See*—
Horiuchi, Kei, 4,063,376, Cl. 38-41.000.
Toshinai, Akio; and Hase, Takashi. Phosphors for infrared-to-visible conversion. 4,064,066, Cl. 252-301.60R.
Toth, Edit; Torley, Jozsef; Palosi, Eva; Szeberenyi, Szaboles; Szporny, Laszlo; Gorog, Sandor; and Meszaros, Csilla, to Richter Gedeon Vegyeszeti Gyar Rt. Substituted nitrobenzophenone derivatives and a process for the preparation thereof. 4,064,121, Cl. 260-239.00B.
Toth, Gizella M.: *See*—
Nyiri, Laszlo K.; Toth, Gizella M.; Parmenter, Douglass V.; and Krishnaswami, Calidas S., 4,064,015, Cl. 195-108.000.
Toth, James Michael, to Republic Steel Corporation. Eddy current defect simulator and method. 4,064,452, Cl. 324-202.000.
Toti, Andrew J. Panel assembly structure and procedure for assembling same. 4,063,393, Cl. 52-245.000.
Touba, Ali R.: *See*—
Hallstrom, Curtis H.; Glass, Brian E.; Touba, Ali R.; and Daravingas, George V., 4,064,282, Cl. 426-559.000.
Towns, Edward Johnson: *See*—
Downing, Neil Hugh; Brown, Edward Morris; and Towns, Edward Johnson, 4,063,666, Cl. 222-455.000.
Toyama, Tadao; Watanabe, Masaru; and Kitago, Harumasa, to Fuji Photo Film Co., Ltd. Process for burning in planographic plates. 4,063,507, Cl. 101-467.000.
Toyo Soda Manufacturing Co., Ltd.: *See*—
Kosaka, Yujiro; Nakazawa, Hideaki; Iikuni, Tetsuo; and Akashi, Mitsumasa, 4,064,085, Cl. 260-29.70R.
Toyota Jidosha Kogyo Kabushiki Kaisha: *See*—
Aoki, Keiji, 4,063,897, Cl. 23-254.00E.
Kuramochi, Kojiro; Watanabe, Kazuaki; and Onuma, Kiyoshi, 4,063,468, Cl. 74-763.000.
Sanda, Shougo; Inoue, Tokuta; Oishi, Kiyohiko; and Yamada, Toshio, 4,063,536, Cl. 123-25.00J.
Tracy, Gordon A.; and Forrest, David L. Center point trailer hitch. 4,063,749, Cl. 280-423.00R.
Tramier, Bernard, to Societe Nationale Elf Aquitaine (Prod.). Restoration of drilling mud-pits. 4,063,386, Cl. 47-58.000.
Trejo, William H.: *See*—
Meyers, Edward; Trejo, William H.; Pluscec, Josip; and Brown, William E., 4,064,013, Cl. 195-80.00R.
Tribe, Leonard T., to Kelsey-Hayes Company. Fail safe bypass for a skid control system. 4,063,785, Cl. 303-115.000.
Triller, Adolf: *See*—
Gelius, Siegfried; Wieczorek, Hanne-Lore; Triller, Adolf; and Nielsen, Nils, 4,063,807, Cl. 351-24.000.
Triplette, Robert Eugene, to Southern Tool Mfg. Co., Inc. Hinge and catch assembly. 4,063,330, Cl. 16-142.000.
Tritsch, Ludwig, to Johnson & Johnson. Disposable diaper having stretchable adhesive tab fasteners with partible protective film. 4,063,559, Cl. 128-287.000.
Trolard, Paul: *See*—
Choay, Jean; Trolard, Paul; and Febvre, Henri Lucien, 4,064,007, Cl. 195-1.800.
Trunnell, Harold K. Method of making a press-fit pipe joint. 4,063,980, Cl. 156-165.000.
Truxa, Leslie: *See*—
Bernreiter, George; and Truxa, Leslie, 4,064,047, Cl. 210-96.00R.
TRW Inc.: *See*—
Hayden, Rodney, 4,064,470, Cl. 335-196.000.
Tseng, Ching Y., to International Flavors & Fragrances Inc. Process for the preparation of trans-Δ^9-isoambrettolide. 4,064,144, Cl. 260-343.000.
Tsiporina, Ljudmila Alexandrovna: *See*—
Sosulnikov, Gleb Borisovich; Fomichev, Vladimir Mikhailovich; Tsiporina, Ljudmila Alexandrovna; Selivanov, Mikhail Prokhorovich; Bobrakov, Lev Vladimirovich; Axenov, Alexandr Sergeevich; Alexandrov, Dmitry Vladimirovich; Ugrjumov, Maxim Semenovich, deceased; Ugrjumova, Raida Nikolaevna, administratrix; Ugrjumov, Nikolai Maximovich, administrator; and Tjumina, Lidia Maximovna, administratrix, 4,063,568, Cl. 137-270.000.
Tsuda, Naoyuki: *See*—
Kano, Gota; Tsuda, Naoyuki; and Iwasa, Hitoo, 4,064,525, Cl. 357-42.000.
Tsuji, Yasutaka: *See*—
Kirita, Kei; Tsuji, Yasutaka; and Moriya, Takahiko, 4,063,973, Cl. 148-188.000.
Tubbs, Graham S., to Texas Instruments Incorporated. Microcomputer with code conversion. 4,064,554, Cl. 364-200.000.
Tullio, Victor, to Du Pont de Nemours, E. I., and Company. Concentrated disazo dye-surfactant solution. 4,063,880, Cl. 8-41.00R.
Tulpule, Bhalchandra Ramchandra: *See*—
Gajski, Daniel Danko; Tulpule, Bhalchandra Ramchandra; and Vora, Chandrakant Ratilal, 4,064,421, Cl. 364-716.000.
Turk, Chester F.: *See*—
Krapcho, John; and Turk, Chester F., 4,064,120, Cl. 260-239.00A.
Turner, Sam R.: *See*—
Pochan, John M.; and Turner, Sam R., 4,063,947, Cl. 96-1.50N.
Turner, William G.: *See*—
Shah, Hemendra K.; and Turner, William G., 4,064,288, Cl. 427-58.000.
Tykulsky, Alexander: *See*—
Dias, J. Fleming; Karrer, Henry E.; and Tykulsky, Alexander, 4,064,550, Cl. 361-283.000.
Tyler, Richard. Night light. 4,064,426, Cl. 362-226.000.
Ube Industries, Ltd.: *See*—
Kawaguchi, Toshiro; Fujii, Setuo; and Matsui, Katsuhiko, 4,063,483, Cl. 83-382.000.
Uchigasaki, Isao: *See*—
Masuda, Shunji; Oyama, Yoshinori; Tanaka, Hisao; Uchigasaki, Isao; and Sasaki, Takehisa, 4,064,111, Cl. 260-75.00M.
Uchino, Minoru: *See*—
Mita, Yasuhiro; Uchino, Minoru; and Sasaki, Masato, 4,063,900, Cl. 23-288.00F.
Ueda, Shigeo, to Bridgestone Tire Company Limited. Composite pneumatic marine fender. 4,063,526, Cl. 114-220.000.

Uemura, Hiroki: *See*—
Saeki, Yoshifumi; and Uemura, Hiroki, 4,064,536, Cl. 358-118.000.
Uemura, Yasukuni, to Nissin Diamond Co., Ltd. Ultrasonic lapping apparatus for drawing dies. 4,063,542, Cl. 125-30.0WD.
Ueno, Hiroshi; Inaba, Naomi; Makishima, Tokuo; and Wada, Shozo, to Toa Nenryo Kogyo Kabushiki Kaisha. Process for the production of a catalyst component for use in the polymerization of α-olefins. 4,064,069, Cl. 252-429.00B.
Ufermann, Werner: *See*—
Axer, Heinrich; Michels, Wolfgang; and Ufermann, Werner, 4,063,858, Cl. 425-81.000.
Ugrjumov, Maxim Semenovich, deceased: *See*—
Sosulnikov, Gleb Borisovich; Fomichev, Vladimir Mikhailovich; Tsiporina, Ljudmila Alexandrovna; Selivanov, Mikhail Prokhorovich; Bobrakov, Lev Vladimirovich; Axenov, Alexandr Sergeevich; Alexandrov, Dmitry Vladimirovich; Ugrjumov, Maxim Semenovich, deceased; Ugrjumova, Raida Nikolaevna, administratrix; Ugrjumov, Nikolai Maximovich, administrator; and Tjumina, Lidia Maximovna, administratrix, 4,063,568, Cl. 137-270.000.
Ugrjumov, Nikolai Maximovich, administrator: *See*—
Sosulnikov, Gleb Borisovich; Fomichev, Vladimir Mikhailovich; Tsiporina, Ljudmila Alexandrovna; Selivanov, Mikhail Prokhorovich; Bobrakov, Lev Vladimirovich; Axenov, Alexandr Sergeevich; Alexandrov, Dmitry Vladimirovich; Ugrjumov, Maxim Semenovich, deceased; Ugrjumova, Raida Nikolaevna, administratrix; Ugrjumov, Nikolai Maximovich, administrator; and Tjumina, Lidia Maximovna, administratrix, 4,063,568, Cl. 137-270.000.
Ugrjumova, Raida Nikolaevna, administratrix: *See*—
Sosulnikov, Gleb Borisovich; Fomichev, Vladimir Mikhailovich; Tsiporina, Ljudmila Alexandrovna; Selivanov, Mikhail Prokhorovich; Bobrakov, Lev Vladimirovich; Axenov, Alexandr Sergeevich; Alexandrov, Dmitry Vladimirovich; Ugrjumov, Maxim Semenovich, deceased; Ugrjumova, Raida Nikolaevna, administratrix; Ugrjumov, Nikolai Maximovich, administrator; and Tjumina, Lidia Maximovna, administratrix, 4,063,568, Cl. 137-270.000.
Uhl, Guenter: *See*—
Merger, Franz; Nestler, Gerhard; Oppenlaender, Knut; Uhl, Guenter; and Wissler, Ruediger, 4,064,309, Cl. 428-413.000.
Uhlig, Fritz; and Gramm, Ine, to Hoechst Aktiengesellschaft. Process for the preparation of planographic printing forms using laser beams. 4,063,949, Cl. 96-27.00E.
Ulinder, Bjorn, to Aktiebolaget Stille-Werner. Cannula assembly. 4,063,555, Cl. 128-214.00R.
Umemoto, Sueo: *See*—
Miyosawa, Yoshiaki; and Umemoto, Sueo, 4,064,028, Cl. 204-181.000.
Unger, Stefan H.: *See*—
Berkoz, Belig M.; Lewis, Brian; and Unger, Stefan H., 4,064,257, Cl. 424-270.000.
Berkoz, Belig M.; Lewis, Brian; and Unger, Stefan H., 4,064,259, Cl. 424-270.000.
Lewis, Brian; Unger, Stefan H.; and Untch, Karl G., 4,064,258, Cl. 424-270.000.
Union Carbide Corporation: *See*—
Downing, James H.; Kaiser, Robert H.; Murphy, William L.; and Vaughn, William R., 4,063,932, Cl. 75-61.000.
Gibson, Charles Arnold; and Theiling, Louis Foster, Jr., 4,064,186, Cl. 260-618.00H.
Heinz, Henry, Jr., 4,063,902, Cl. 29-623.200.
McRobbie, Henry William, 4,064,156, Cl. 260-449.60M.
Raudys, Vytas Andrew; and DeVitto, Ronald Robert, 4,063,481, Cl. 83-199.000.
Union Oil Company of California: *See*—
Clark, Danford E., 4,064,036, Cl. 208-46.000.
McArthur, Dennis P., 4,064,152, Cl. 260-449.60M.
Uniroyal, Inc.: *See*—
McCoy, Robert H.; and White, Woodrow W., 4,064,081, Cl. 260-17.500.
Unisen, Inc.: *See*—
Sweeney, James Stevens, 4,063,551, Cl. 128-2.05P.
Unit Rig & Equipment Co.: *See*—
Satterwhite, Charles R., 4,063,375, Cl. 37-190.000.
United Carbide Corporation: *See*—
Hedaya, Eddie; and Spyros, Theodoropulos, 4,064,151, Cl. 260-448.20N.
United Electric Controls Company: *See*—
Reis, Robert D., 4,064,476, Cl. 338-41.000.
United Kingdom of Great Britain and Northern Ireland, The Secretary of State for Defence in Her Britannic Majesty's Government of the: *See*—
Critchley, John Phillip, 4,063,984, Cl. 260-45.75B.
United States Gypsum Company: *See*—
Balinski, Henry A.; and Grupe, Robert C., Jr., 4,063,391, Cl. 52-1.000.
United States of America
Agriculture: *See*—
Mares, Trinidad; Arthur, Jett C., Jr.; and Harris, James A., 4,063,885, Cl. 8-115.700.
O'Connell, Richard A.; and Foster, Robert E., 4,063,888, Cl. 8-149.000.
Saunders, Robert M.; and Kohler, George O., 4,064,283, Cl. 426-583.000.
Air Force: *See*—
Cross, Edward F.; Kwok, Munson A.; and Jonuska, Daniel C., 4,064,535, Cl. 358-113.000.
Davis, Dale M., 4,063,512, Cl. 102-52.000.
Evers, Robert C., 4,064,109, Cl. 260-61.000.
Grove, Clark Richard, 4,064,456, Cl. 324-115.000.
Hayes, Cecil L., 4,063,819, Cl. 356-152.000.
King, Lowell A.; Brabson, George D., Jr.; Erbacher, John K.; Seegmiller, David W.; Fannin, Armand A., Jr.; and Viola, John T., 4,064,327, Cl. 429-112.000.
Masak, Raymond J., 4,064,422, Cl. 364-841.000.
O'Brien, John R.; Holman, Harry A., Jr.; and Kallmeyer, Albert W., 4,063,684, Cl. 239-265.110.
Stebbins, William J., 4,064,435, Cl. 250-231.0SE.
Whiting, Richard A., 4,063,508, Cl. 102-7.200.
Army: *See*—
Chew, William M.; Ayers, Orval E.; Murfree, James A.; and Martignoni, Pasquale, 4,064,225, Cl. 423-648.00R.
F'Geppert, Erwin, 4,063,467, Cl. 74-689.000.
Hadfield, Harry J., 4,063,514, Cl. 102-79.000.
Hill, Terrance E.; and Riley, George R., 4,063,454, Cl. 73-141.00A.
Jacobs, Paul L., 4,063,685, Cl. 239-265.170.
Kadish, Ben-Ami; and Parker, David I., 4,063,513, Cl. 102-70.20R.
Kelleher, John J., 4,064,407, Cl. 307-268.000.
Merritt, James A.; and Robertson, Lawrence C., 4,063,896, Cl. 23-254.00R.
Rhoades, Richard G., 4,063,415, Cl. 60-261.000.
Sliz, Edward; Brooks, John O.; and Gibson, Howard M., 4,063,345, Cl. 29-522.000.
Energy Research and Development Administration: *See*—
Newton, Robert G., 4,064,003, Cl. 176-38.000.
Wu, Cheng-Teh; Falco, Charles M.; and Kampwirth, Robert T., 4,064,029, Cl. 204-192.00S.
Energy Research & Development Administration: *See*—
Chen, Hao-Lin, 4,064,025, Cl. 204-158.00R.
Health, Education and Welfare: *See*—
Franklin, Alan D., 4,064,023, Cl. 204-130.000.
National Aeronautics and Space Administration: *See*—
Rhodes, David B., 4,063,814, Cl. 356-28.000.
Rhodes, Marvin D.; and Mikulas, Martin M., Jr., 4,063,981, Cl. 156-245.000.
Navy: *See*—
Koenig, Harry J., 4,064,360, Cl. 178-3.000.
Leonard, Guy W.; and Austin, Carl F., 4,063,509, Cl. 102-20.000.
U.S. Philips Corporation: *See*—
Franssen, Nico Valentinus, 4,064,505, Cl. 340-347.0DD.
Jetten, Gerbrand, 4,064,540, Cl. 358-142.000.
Kuijer, William Lodewijk; Sygall, Peter Ivan; and Wennekes, Paulus Johannes, 4,064,291, Cl. 427-106.000.
Pasedach, Klaus; and Wagner, Wolfgang, 4,064,393, Cl. 364-414.000.
Roeder, Erwin; and Steinbeck, Edmund, 4,063,914, Cl. 65-2.000.
Tiemeijer, Robert, 4,064,406, Cl. 307-228.000.
van Eijck, Gustavus Lambertus Petrus, 4,064,461, Cl. 325-470.000.
United States Steel Corporation: *See*—
Shapland, Earl P.; and Shapland, James T., 4,063,668, Cl. 222-512.000.
United Technologies Corporation: *See*—
Bushnell, Calvin L.; and Kunz, Harold Russell, 4,064,322, Cl. 429-41.000.
DeCrescente, Michael A.; Layden, George K.; and Pike, Roscoe A., 4,064,207, Cl. 264-29.600.
Weldon, Howard Aubrey, 4,063,851, Cl. 416-97.00A.
Unitika Ltd.: *See*—
Hazama, Kenichi; Hirose, Isamu; Yasue, Kenji; and Shinoura, Daisuke, 4,064,196, Cl. 260-860.000.
Unitrol, Inc.: *See*—
Yost, Charles N.; Bolyard, Millard R.; and Whitmer, Leon M., 4,064,501, Cl. 340-286.00R.
Universal Oil Products Company: *See*—
Vermilion, Willas L., Jr., 4,064,038, Cl. 208-120.000.
University of Illinois Foundation: *See*—
Katzenellenbogen, John A., 4,064,150, Cl. 260-413.000.
University of Southern California, The: *See*—
Hellwarth, Robert W.; and Christensen, C. Paul, Jr., 4,063,804, Cl. 350-320.000.
University of Utah, The: *See*—
Alex, Franklin; and Byrne, Joseph Gerald, 4,064,438, Cl. 250-308.000.
Untch, Karl G.: *See*—
Lewis, Brian; Unger, Stefan H.; and Untch, Karl G., 4,064,258, Cl. 424-270.000.
Upjohn Company, The: *See*—
Axen, Udo F., 4,064,160, Cl. 560-53.000.
Johnson, Herbert G., 4,064,248, Cl. 424-258.000.
Wiley, Paul F.; and Johnson, Jian L., 4,064,340, Cl. 536-17.000.
Wiley, Paul F.; and Johnson, Jian L., 4,064,341, Cl. 536-17.000.
Uraneck, Carl A.; and Burleigh, John E., to Phillips Petroleum Company. Mixing of organosulfur molecular weight modifier with emulsifier for emulsion polymerization systems. 4,064,337, Cl. 526-204.000.
Usher, John Dennis, to A.P.V. Company Limited, The. Plate heat exchangers. 4,063,591, Cl. 165-167.000.
USM Corporation: *See*—
Gorini, Robert Francis; Johnson, Herbert; and Sillars, Frederick Stirling, 4,063,527, Cl. 118-5.000.

Woodman, Daniel Wayne, Jr., 4,063,347, Cl. 29-564.100.
Valmet Oy: *See*—
Kirjavainen, Alvi; and Koskimies, Jouni, 4,063,997, Cl. 162-340.000.
Van Daele, Georges Henri Paul: *See*—
Janssen, Paul Adriaan Jan; Van Daele, Georges Henri Paul; and Boey, Jozef Martin, 4,064,132, Cl. 260-293.620.
Van De Putte, Jacques Marie: *See*—
Smets, Georges Joseph; and Van De Putte, Jacques Marie, 4,064,078, Cl. 260-2.0EN.
van der Lely, Cornelis. Soil cultivating machines. 4,063,596, Cl. 172-65.000.
van Eijck, Gustavus Lambertus Petrus, to U.S. Philips Corporation. Receiver including a station finding circuit. 4,064,461, Cl. 325-470.000.
Vanguard Electronics Company, Inc.: *See*—
Gunewardena, Shelly J.; Glick, Leslie P.; and Sakihara, Yoshinobu F., 4,064,472, Cl. 336-65.000.
Vanguard Plastics Ltd.: *See*—
Follows, James, 4,063,397, Cl. 52-684.000.
van Herpen, Frederik Cornelis. Door or window closure. 4,063,763, Cl. 292-39.000.
Van Lith, Albert: *See*—
Halle, Gary L.; and Van Lith, Albert, 4,063,859, Cl. 425-139.000.
Van Loo, William Rudolph: *See*—
Van Ryn, Arthur Louis; Van Loo, William Rudolph; and Raymond, David William, 4,063,392, Cl. 52-9.000.
Van Ryn, Arthur Louis; Van Loo, William Rudolph; and Raymond, David William, to American Seating Company. Telescoping seating system with automatically folding chairs. 4,063,392, Cl. 52-9.000.
Van Zandt, Richard Taylor, to American Cyanamid Company. Chemical light device. 4,064,428, Cl. 362-34.000.
Varian Associates, Inc.: *See*—
Mann, Joseph K., 4,064,352, Cl. 13-31.000.
Varsanyi, Denis V.; Aufderhaar, Ernst; and Schweizer, Ernst, to Ciba-Geigy Corporation. Dithiocarbamic acid esters. 4,064,265, Cl. 424-300.000.
Vassilev, Vassil Ivanov; Goranov, Hristo Vladimirov; and Sivchev, Sivcho Hristov, to Nauchno-Proizvodstveno Obedinenie po Veterinarno Delo. Method for the early diagnosis of cancer. 4,063,892, Cl. 23-230.00B.
Vassiliou, Eustathios, to Du Pont de Nemours, E. I., and Company. Process for decorating heat-stable polymer coating compositions. 4,064,303, Cl. 428-201.000.
Vaughn, William R.: *See*—
Downing, James H.; Kaiser, Robert H.; Murphy, William L.; and Vaughn, William R., 4,063,932, Cl. 75-61.000.
VCA Corporation: *See*—
Hayes, Thomas H.; and Beres, Steve W., 4,063,854, Cl. 417-552.000.
Veale, John R., to Sultan Products, Incorporated. Audio fidelity amplifier and preamplifier systems. 4,064,364, Cl. 179-1.00B.
Vecho, John B., Jr. Offset pipe bending device. 4,063,444, Cl. 72-459.000.
Velsicol Chemical Corporation: *See*—
Anderson, Arnold L., 4,064,105, Cl. 260-45.75B.
Krenzer, John, 4,063,924, Cl. 71-90.000.
Venot, Jean, to ASA S.A. Device for unthreading yarn from a bobbin. 4,063,697, Cl. 242-131.000.
Verbrugge, Herman, to Shell Oil Company. Preparation of 2-halocyclobutanones. 4,064,174, Cl. 260-586.00C.
Vermilion, Willas L., Jr., to Universal Oil Products Company. Fluid catalytic cracking process for conversion of residual oils. 4,064,038, Cl. 208-120.000.
Vertipile, Inc.: *See*—
Shah, Hemendra K.; and Turner, William G., 4,064,288, Cl. 427-58.000.
Victor Company of Japan, Ltd.: *See*—
Ota, Yoshihiko; and Hirota, Akira, 4,064,537, Cl. 358-127.000.
Viola, John T.: *See*—
King, Lowell A.; Brabson, George D., Jr.; Erbacher, John K.; Seegmiller, David W.; Fannin, Armand A., Jr.; and Viola, John T., 4,064,327, Cl. 429-112.000.
Vissers, Adrianus Martinus: *See*—
Theron, Pieter Paul Adriaan; Vissers, Adrianus Martinus; and Saisselin, Aureliano Luigi, 4,064,284, Cl. 426-626.000.
Vista Developments, Inc.: *See*—
Buggy, Michael, 4,063,692, Cl. 242-56.900.
Vock, Manfred Hugo: *See*—
Evers, William J.; Heinsohn Jr., Howard H.; and Vock, Manfred Hugo, 4,064,278, Cl. 426-535.000.
Evers, William J.; Heinsohn, Howard H., Jr.; and Vock, Manfred Hugo, 4,064,280, Cl. 426-535.000.
Hall, John B.; Sprecker, Mark A.; Schmitt, Frederick Louis; and Vock, Manfred Hugo, 4,064,281, Cl. 426-538.000.
Light, Kenneth K.; Vock, Manfred Hugo; Shuster, Edward J.; and Schmitt, Frederick Louis, 4,064,184, Cl. 260-617.00R.
Withycombe, Donald Arthur; Hruza, Anne; Vock, Manfred Hugo; Giacino, Christopher; Mookherjee, Braja Dulal; Pittet, Alan Owen; and Schreiber, William L., 4,064,279, Cl. 426-535.000.
Vockenhuber, Karl: *See*—
Freudenschuss, Otto; Keznickl, Eduard; and Scheiber, Robert, 4,064,520, Cl. 354-196.000.
Vodra, Richard J. Vacuum forming mold. 4,063,705, Cl. 249-80.000.
Vogt, Hans-Wilhelm; and Frogermann, Gerd, to Klockner Humboldt Deutz Aktiengesellschaft. Method and apparatus for operating instruments subject to radiation. 4,063,458, Cl. 73-355.00R.
Volk, Heinrich: *See*—
Papenfuhs, Theodor; and Volk, Heinrich, 4,064,349, Cl. 560-56.000.
Volkswagenwerk Aktiengesellschaft: *See*—
Vortmann, Walter, 4,064,016, Cl. 198-412.000.
Volz, Dieter; Buchscheidt, Kurt; and Rech, Reiner, to Elbatainer GmbH. Device for the welding of an injection-molded spigot in a thin-wall fluid vessel. 4,063,990, Cl. 156-580.200.
vom Stein, Hans, to Interroll Fordertechnik GmbH & Co. KG. Disconnectable driving roller for roller conveyors. 4,063,636, Cl. 198-781.000.
von Eickstedt, Klaus-Wolf: *See*—
Milkowski, Wolfgang; Zeugner, Horst; von Eickstedt, Klaus-Wolf; and Stuhmer, Werner, 4,064,128, Cl. 260-268.00R.
Von Hoene, Donald C.; and Magde, John M., to Xerox Corporation. Electrostatographic imaging method. 4,063,943, Cl. 96-1.00R.
Von Hoene, Donald C.; and Post, Richard L., to Xerox Corporation. Electrostatographic imaging method. 4,063,945, Cl. 96-1.00R.
Von Kemenczky, Miklos, to Guilden, Paul. Film advancing mechanism. 4,063,671, Cl. 226-76.000.
von Lauff, Hans Peter; Fabian, Wolfgang; and Hellstern, Heidrun, to BASF Aktiengesellschaft. Manufacture of easily dispersed transparent iron oxide pigments. 4,063,957, Cl. 106-304.000.
Vora, Chandrakant Ratilal: *See*—
Gajski, Daniel Danko; Tulpule, Bhalchandra Ramchandra; and Vora, Chandrakant Ratilal, 4,064,421, Cl. 364-716.000.
Voronin, Nikolai Georgievich: *See*—
Bochkarev, Ellin Petrovich; Maslov, Vadim Nikolaevich; Voronin, Nikolai Georgievich; Korobov, Oleg Evgenievich; and Gavrilin, Eduard Ivanovich, 4,063,529, Cl. 118-49.100.
Vortmann, Walter, to Volkswagenwerk Aktiengesellschaft. Transfer device. 4,064,016, Cl. 198-412.000.
Voumard, Martial: *See*—
Huguenin, Raymond; Matthey, Hubert; and Voumard, Martial, 4,063,910, Cl. 51-413.000.
W. R. Grace & Co.: *See*—
Bornstein, Norman D.; d'Entremont, Donald J.; Weinberg, Alan S.; Schirmer, Henry G.; and Sun, Joseph Zu, 4,064,296, Cl. 428-35.000.
Waas, Heinrich. Method of deflecting ice at upright columns submerged in water of stationary or floating structures in marine areas in which the occurence of ice may be expected, and ice deflector assembly therefor. 4,063,428, Cl. 61-102.000.
Wacker-Chemie GmbH: *See*—
Roth, Michael; Bosch, Erhard; and Gluck, Herbert, 4,063,958, Cl. 106-308.00Q.
Wada, Shozo: *See*—
Ueno, Hiroshi; Inaba, Naomi; Makishima, Tokuo; and Wada, Shozo, 4,064,069, Cl. 252-429.00B.
Wade, Elman E., to Westinghouse Electric Corporation. Nuclear fuel storage arrangement. 4,063,999, Cl. 176-28.000.
Wagner, Wolfgang: *See*—
Pasedach, Klaus; and Wagner, Wolfgang, 4,064,393, Cl. 364-414.000.
Wahlmann, Ernst; and Schottker, Willi, to P.A. Rentrup, Hubbert & Wagner Fahrzeugausstattungen GmbH & Co. KG. Vehicle seats. 4,063,776, Cl. 297-361.000.
Wain, Alan James Bradley; Boot, Frank Lyn; and Baines, John Eric, to BPB Industries Limited. Plasterboard manufacture. 4,063,976, Cl. 156-44.000.
Wakashima, Yoshiaki: *See*—
Yokoyama, Takashi; Miyadera, Yasuo; Shito, Nobuhiko; Suzuki, Hiroshi; and Wakashima, Yoshiaki, 4,064,289, Cl. 427-82.000.
Waksberg, Armand. Retro-reflection communication system. 4,064,434, Cl. 250-199.000.
Wald Manufacturing Co., Inc.: *See*—
Pawsat, Carlton P., 4,063,798, Cl. 350-99.000.
Waldo, Russell W., to Ideal Security Hardware Corporation. Automatically locking crossbolt deadlock. 4,063,765, Cl. 292-335.000.
Walker, Clarence O.: *See*—
Walker, Thad O.; and Walker, Clarence O., 4,064,056, Cl. 252-8.50C.
Walker, John F., to Hercules Incorporated. Mixed synthetic ester grease base stock. 4,064,058, Cl. 252-56.00S.
Walker, Thad O.; and Walker, Clarence O., to Texaco Inc. Drilling fluids containing an additive composition. 4,064,056, Cl. 252-8.50C.
Waller, Duncan E., to Dentsply Research & Development Corporation. Orthodontic bracket assembly and method for attachment. 4,063,360, Cl. 32-14.00A.
Wallgard, Gunnar A., to Saab-Scania Aktiebolag. Fail-safe block control system for driverless vehicles. 4,063,699, Cl. 246-63.00R.
Wallin, Erik W., to Barracudaverken AB. Knitted camouflage material. 4,064,305, Cl. 428-246.000.
Waltz, Gerry L.: *See*—
Wiggins, Jesse O.; and Waltz, Gerry L., 4,063,848, Cl. 415-206.000.
Wang, Der-I: *See*—
Gallo, Michael A.; and Wang, Der-I, 4,064,237, Cl. 424-200.000.
Wankel GmbH: *See*—
Eiermann, Dankwart, 4,063,535, Cl. 123-8.130.
Ward, William J., III, to Terradex Corporation. Reducing noise in uranium exploration. 4,064,436, Cl. 250-253.000.
Ware Fuse Corporation: *See*—
Ware, Gordon K., 4,063,660, Cl. 220-3.600.
Ware, Gordon K., to Ware Fuse Corporation. Electrical outlet box. 4,063,660, Cl. 220-3.600.
Warner-Lambert Company: *See*—
Brown, Richard E., 4,064,123, Cl. 544-142.000.

Warner, Richard Burridge: *See*—
Serban, Alexander; Warner, Richard Burridge; and Alcock, Keith Thomas, 4,064,262, Cl. 424-285.000.
Warren, Benedict O.; and Rosener, Maurice, to Warren Turf Nursery, Inc. Method of and apparatus for washing sod strips, and method of sodding with washed sod strips. 4,063,384, Cl. 47-58.000.
Warren, Eric: *See*—
Amsbury, Clifford Roy; and Warren, Eric, 4,063,362, Cl. 33-147.00J.
Warren Turf Nursery, Inc.: *See*—
Warren, Benedict O.; and Rosener, Maurice, 4,063,384, Cl. 47-58.000.
Warren, Ward A.: *See*—
Day, Leon E., 4,063,597, Cl. 172-126.000.
Warwick, David William: *See*—
Phillips, Peter Harold; and Warwick, David William, 4,064,543, Cl. 358-248.000.
Washburn, Dean Becker; and Cleveland, Dale Paul, to Mattel, Inc. Apparatus for stuffing the limbs of small dolls. 4,063,402, Cl. 53-258.000.
Washington, Corinthian. Grave opening and closing machine. 4,063,374, Cl. 37-142.500.
Watanabe, Kazuaki: *See*—
Kuramochi, Kojiro; Watanabe, Kazuaki; and Onuma, Kiyoshi, 4,063,468, Cl. 74-763.000.
Watanabe, Masaru: *See*—
Toyama, Tadao; Watanabe, Masaru; and Kitago, Harumasa, 4,063,507, Cl. 101-467.000.
Waters, Alan James: *See*—
Pizzey, Anthony Reginald; and Waters, Alan James, 4,063,482, Cl. 83-207.000.
Watkins, Shelton, Jr., to Kentucky Metals, Inc. Abradable fluid seal for aircraft gas turbines. 4,063,742, Cl. 277-53.000.
Weatherhead Company, The: *See*—
Moreiras, Luis, 4,063,760, Cl. 285-242.000.
Weaver, Don M.; and Reichman, Steven H., to Special Metals Corporation. Composite turbine wheel and process for making same. 4,063,939, Cl. 75-208.00R.
Wedel, Jerry L.: *See*—
Hopkins, Evan Leon; Hopkins, Evan Lloyd; and Wedel, Jerry L., 4,063,365, Cl. 33-288.000.
Wedel, Jerry Leslie: *See*—
Hopkins, Evan Lloyd; and Wedel, Jerry Leslie, 4,064,455, Cl. 324-61.00R.
Weeks, Bruce W., to Minnesota Mining and Manufacturing Company. Applying sublimation indicia to pressure-sensitive adhesive tape. 4,063,878, Cl. 8-2.50A.
Wehner, Albert, to Hein, Lehmann Akt. Elastic transporting, sieving or filtering base with swinging drive. 4,064,051, Cl. 210-389.000.
Weier, Richard M., to G. D. Searle & Co. 3-Alkoxy-D-homo-C-nor-13 alpha, 14 alpha-gona-1,3,5,(10),6,8-pentaen-17-one and derivatives thereof. 4,064,177, Cl. 260-590.0FB.
Weigert, Frank Julian, to Du Pont de Nemours, E. I., and Company. Process for preparation of aromatic amines. 4,064,171, Cl. 260-581.000.
Weinberg, Alan S.: *See*—
Bornstein, Norman D.; d'Entremont, Donald J.; Weinberg, Alan S.; Schirmer, Henry G.; and Sun, Joseph Zu, 4,064,296, Cl. 428-35.000.
Weiss, Morris, to Electronics Sports Products, Inc. Motorized golf bag cart. 4,063,612, Cl. 180-195.000.
Weissman, Gerd. Method for producing a nitride based hard metal powder. 4,063,938, Cl. 75-205.000.
Weitz, Hans-Martin; and Fischer, Rolf, to BASF Aktiengesellschaft. Manufacture of pyrazines. 4,064,124, Cl. 260-250.00B.
Welch, Gerald J. Car top boat carrier. 4,063,659, Cl. 214-450.000.
Welcher, Richard Parke: *See*—
Rabinowitz, Robert; and Welcher, Richard Parke, 4,064,333, Cl. 526-77.000.
Welding Institute, The: *See*—
Lilly, Rodger H., 4,063,676, Cl. 228-114.000.
Weldon, Howard Aubrey, to United Technologies Corporation. Coolable turbine airfoil. 4,063,851, Cl. 416-97.00A.
Weldotron Corporation: *See*—
Millevoi, Eugenio, 4,063,400, Cl. 53-180.00R.
Welling, Gregory J. Digital watch including a signal transmitter. 4,063,410, Cl. 58-38.00R.
Wendel, Dan P. CB Radio highway board game apparatus. 4,063,735, Cl. 273-134.0AC.
Wennekes, Paulus Johannes: *See*—
Kuijer, William Lodewijk; Sygall, Peter Ivan; and Wennekes, Paulus Johannes, 4,064,291, Cl. 427-106.000.
Wenzel, Robert H., to Textron, Inc. Tracer mechanism with axial force means for its stylus and systems incorporating the same. 4,064,445, Cl. 318-578.000.
Werkzeugmaschinenfabrik Oerlikon-Buhrle AG: *See*—
Pier-Amory, Jacques, 4,063,487, Cl. 89-130.000.
Wescom Switching, Inc.: *See*—
Regan, John F., 4,064,377, Cl. 179-170.0NC.
Westberg, Alvar Torsten, to Sandvik Aktiebolag. Coupling for pipes. 4,063,758, Cl. 285-177.000.
Western Magnum Corporation: *See*—
Cox, Dale W., 4,064,203, Cl. 261-99.000.
Westinghouse Air Brake Company: *See*—
Hyler, John H.; and Orth, Edward G., 4,063,361, Cl. 37-129.000.
O'Malley, Larry V., 4,064,367, Cl. 179-2.00A.
Westinghouse Brake & Signal Co. Ltd.: *See*—
Coleman, John Dale; and Paginton, Philip Norman, 4,063,622, Cl. 188-153.00R.
Westinghouse Electric Corporation: *See*—
Bolin, Philip C., 4,064,353, Cl. 174-14.00R.
Cookson, Alan H., 4,064,354, Cl. 174-28.000.
Cricchi, James R.; and Fitzpatrick, Michael D., 4,064,405, Cl. 307-205.000.
Desalu, Adewunmi A., 4,064,392, Cl. 364-492.000.
Desmarchais, Walter E.; Katz, Leonard R.; and Silverblatt, Bernard L., 4,064,002, Cl. 176-38.000.
Doby, William P., 4,063,661, Cl. 220-293.000.
Hundstad, Richard L.; and Farish, Owen, 4,064,465, Cl. 331-94.5PE.
Kearney, Joseph P., 4,064,418, Cl. 315-348.000.
Kipple, Harry P.; Alke, Roger J.; and Price, Charles E., 4,063,532, Cl. 118-429.000.
Lampe, Donald Ross; and White, Marvin Hart, 4,064,533, Cl. 358-105.000.
Mandel, Alan F.; Kirsch, Andrew F.; and Eichler, Kenneth M., 4,063,620, Cl. 187-29.00R.
Meier, Joseph F., 4,064,089, Cl. 260-29.40R.
Morse, Alfred W., 4,064,464, Cl. 330-53.000.
Mullen, John H.; and Dobrosielski, Stephen S., 4,064,381, Cl. 200-16.00A.
Patton, Jesse T.; and Langer, Alois, 4,064,331, Cl. 429-221.000.
Peterson, Robert S., 4,064,419, Cl. 318-179.000.
Rall, Marcus E., 4,063,786, Cl. 308-1.00A.
Schmitz, Lawrence S., 4,064,507, Cl. 340-384.00E.
Wade, Elman E., 4,063,999, Cl. 176-28.000.
Weston, Charles W., to Mississippi Chemical Corporation. Reducing settling rate of post-precipitate in fertilizer solution by chloride addition. 4,063,920, Cl. 71-34.000.
Weston Chemical Co., Inc.: *See*—
Hechenbleikner, Ingenuin, 4,064,100, Cl. 260-45.80R.
Westvaco Corporation: *See*—
Powers, John R.; and Miller, Frances C., 4,063,886, Cl. 8-127.000.
Wetzels, Walter, to SCHUMAG Schumacher Metallwerke Gesellschaft mit beschrankter Haftung. Method for grinding elongated cylindrical workpieces which are advanced during the grinding operation while being rotated about the longitudinal axis thereof. 4,063,906, Cl. 51-289.00R.
Wheatley, William; Goff, Robert Roy; and Wheatley, William Charles, to Winster Engineering Group Limited. Intrinsically safe telephone systems. 4,064,366, Cl. 179-2.00R.
Wheatley, William Charles: *See*—
Wheatley, William; Goff, Robert Roy; and Wheatley, William Charles, 4,064,366, Cl. 179-2.00R.
Wheelabrator-Frye, Inc.: *See*—
O'Dell, David L., 4,063,618, Cl. 184-105.00A.
Whitaker, Richard A.; and Stuart, David H. Ski binding having present means and detent trigger for said present means. 4,063,752, Cl. 280-624.000.
White, Edward Montcalm, to International Business Machines Corporation. Multiple brush developer applying apparatus with a toner diverter blade. 4,063,533, Cl. 118-658.000.
White, Marvin Hart: *See*—
Lampe, Donald Ross; and White, Marvin Hart, 4,064,533, Cl. 358-105.000.
White, Woodrow W.: *See*—
McCoy, Robert H.; and White, Woodrow W., 4,064,081, Cl. 260-17.500.
Whitehead, Brian D.: *See*—
Rothe, Hans Joachim; Heinze, Helmut; Whitehead, Brian D.; and Priepke, Gunther, 4,064,112, Cl. 260-75.00M.
Whiting, Richard A., to United States of America, Air Force. Munition dispersion by interstitial propelling charges. 4,063,508, Cl. 102-7.200.
Whitmer, Leon M.: *See*—
Yost, Charles N.; Bolyard, Millard R.; and Whitmer, Leon M., 4,064,501, Cl. 340-286.00R.
Wickstead, Clifford, to Rockware Glass Limited. Size control. 4,063,643, Cl. 209-82.000.
Wieczorek, Hanne-Lore: *See*—
Gelius, Siegfried; Wieczorek, Hanne-Lore; Triller, Adolf; and Nielsen, Nils, 4,063,807, Cl. 351-24.000.
Wiemer, Karl-Heinz: *See*—
Wilken, Joachim; Wiemer, Karl-Heinz; and Kauer, Harald, 4,063,815, Cl. 356-29.000.
Wiggins, Jesse O.; and Waltz, Gerry L., to Caterpillar Tractor Co. Centrifugal compressor vaneless space casing treatment. 4,063,848, Cl. 415-206.000.
Wilde, Melvyn; and Sutton, Robert John. Corner protectors. 4,063,702, Cl. 248-345.100.
Wildgruber, Josef: *See*—
Rieger, Klaus; Stetter, Karl-Heinz; and Wildgruber, Josef, 4,064,149, Cl. 260-406.000.
Wiley, Paul F.; and Johnson, Jian L., to Upjohn Company, The. Nogamycin and process of preparation. 4,064,340, Cl. 536-17.000.
Wiley, Paul F.; and Johnson, Jian L., to Upjohn Company, The. Nogalamycinic acid and derivatives thereof. 4,064,341, Cl. 536-17.000.
Wilken, Joachim; Wiemer, Karl-Heinz; and Kauer, Harald, to Dr. -Ing. Ludwig Pietzsch. Apparatus and method for optical tracking and aiming. 4,063,815, Cl. 356-29.000.
Wilkinson, Michael T., to Combustion and Controls Company, Inc. Merchandise package. 4,063,640, Cl. 206-231.000.

Willamette Industries, Inc.: *See—*
Hall, Richard A., 4,063,678, Cl. 229-39.00R.
Williams, Allan R. Canopy for pickup trucks. 4,063,762, Cl. 290-23.00R.
Williams, David Richard. Hearing protector. 4,064,362, Cl. 179-1.00P.
Williams, Stanley Boyin. Carrier for tennis equipment. 4,063,581, Cl. 150-52.00G.
Willis, Daniel A., to Fuller Company. Spray nozzle. 4,063,686, Cl. 239-404.000.
Willmott, Colin Barns; and Stifle, James D., to Chamberlain Manufacturing Corporation. Accessory for a garage door opener. 4,064,404, Cl. 307-141.400.
Willock, Charles B.; and Wood, Roger E. Single needle alternating flow blood pump system. 4,063,554, Cl. 128-214.00R.
Wilson, Ernest I. Pipeline retard, support and protection method. 4,063,429, Cl. 61-105.000.
Wilson Foods Corporation: *See—*
O'Neal, Leo; Stark, Wayne H.; and Hoium, Richard B., 4,063,331, Cl. 17-45.000.
Wilson, Robert J. Electronically controlled hydraulic exercising system. 4,063,726, Cl. 272-130.000.
Windmoller & Holscher: *See—*
Achelpohl, Fritz; and Feldkamper, Richard, 4,063,693, Cl. 242-67.10R.
Ottenhues, Ludger; and Meyer, Willi, 4,063,504, Cl. 101-153.000.
Wingen, Wilhelm, to Fritzmeier AG. Spline element for seat in a vehicle. 4,063,723, Cl. 267-131.000.
Winster Engineering Group Limited: *See—*
Wheatley, William; Goff, Robert Roy; and Wheatley, William Charles, 4,064,366, Cl. 179-2.00R.
Wissler, Ruediger: *See—*
Merger, Franz; Nestler, Gerhard; Oppenlaender, Knut; Uhl, Guenter; and Wissler, Ruediger, 4,064,309, Cl. 428-413.000.
Withycombe, Donald Arthur; Hruza, Anne; Vock, Manfred Hugo; Giacino, Christopher; Mookherjee, Braja Dulal; Pittet, Alan Owen; and Schreiber, William L., to International Flavors & Fragrances Inc. Alpha-substituted alkylidene methionals and uses thereof in foodstuffs and flavors for foodstuffs. 4,064,279, Cl. 426-535.000.
Wittchow, Eberhard; and Kral, Rudolf, to Kraftwerk Union Aktiengesellschaft. Burner installation in a steam generator with firing means for pulverized coal and gas. 4,063,522, Cl. 110-22.00A.
Witzel, Frank: *See—*
Mackay, Donald A. M.; Clark, K. Warren; Witzel, Frank; and Schoenholz, Daniel, 4,064,274, Cl. 426-3.000.
Woehrle, R. E.: *See—*
Eppensteiner, Frederick Walter; and Woehrle, R. E., 4,064,034, Cl. 204-286.000.
Wolf, Lajos: *See—*
Mago nee Karacsony, Erzsebet; Borsi, Jozsef; Csanyi, Endre; Pik, Katalin; and Wolf, Lajos, 4,064,249, Cl. 424-261.000.
Wolfe, Robert Wade: *See—*
Fritsch, Carl William, Jr.; and Wolfe, Robert Wade, 4,063,955, Cl. 106-39.600.
Wollweber, Hartmund; Niemers, Ekkehard; Schulz, Hans Peter; Thomas, Herbert; and Andrews, Peter, to Bayer Aktiengesellschaft. N'-(Aminoacylaminophenyl) acetamidines. 4,064,270, Cl. 424-324.000.
Wong, Jeffrey Tze-Fei, to Hematech Inc. Blood substitute based on hemoglobin. 4,064,118, Cl. 260-112.50R.
Wong, Jun Kin: *See—*
Tom, Leung Chong; and Wong, Jun Kin, 4,063,737, Cl. 273-174.000.
Wood, Eric, to Insituform (Pipes & Structures) Ltd. Lining of passageways. 4,064,211, Cl. 264-95.000.
Wood, Roger E.: *See—*
Willock, Charles B.; and Wood, Roger E., 4,063,554, Cl. 128-214.00R.
Woodman, Daniel Wayne, Jr., to USM Corporation. Machine for inserting multi-lead components sequentially. 4,063,347, Cl. 29-564.100.
Worden, John A.: *See—*
Bergmann, Werner J.; and Worden, John A., 4,063,677, Cl. 228-242.000.
Worms, Karl-Heinz: *See—*
Blum, Helmut; and Worms, Karl-Heinz, 4,064,164, Cl. 260-502.500.
Worsk Hydro a.s: *See—*
Conradsen, Arne; and Lie, Ole Hannibal, 4,064,276, Cl. 426-69.000.
Worson S.A.: *See—*
Piotrowski, Tadeusz, 4,063,868, Cl. 425-533.000.
Wray, Rhodes E. Chair attached holder. 4,063,701, Cl. 248-293.000.
Wright, David L.; and Goldsborough, John P., to Spectra-Physics, Inc. Transmissive end seal for laser tubes. 4,063,803, Cl. 350-319.000.
Wright, Donald R., to Textron, Inc. Pneumatic control system for a press. 4,063,627, Cl. 192-131.00R.
Wright, George C.; and Butterfield, James L., to Morton-Norwich Products, Inc. Ethyl-3-(3-amino-2-pyridyl)carbazate hydrochloride. 4,064,134, Cl. 260-295.0CA.
Wu, Cheng-Teh; Falco, Charles M.; and Kampwirth, Robert T., to United States of America, Energy Research and Development Administration. Method of making an improved superconducting quantum interference device. 4,064,029, Cl. 204-192.00S.
Wuchinich, David G.; Broadwin, Alan; and Andersen, Robert P., to Cavitron Corporation. Ultrasonic aspirator. 4,063,557, Cl. 128-276.000.
Wulfekotter, Dudley: *See—*
Power, George Edward; and Wulfekotter, Dudley, 4,064,297, Cl. 428-86.000.
Wyatt, William Kirk, to Textured Yarn Co., Inc. Strand treatment method and apparatus. 4,063,338, Cl. 28-221.000.
Wysocki, Edward J.: *See—*
MacIntyre, Robert W.; and Wysocki, Edward J., 4,063,472, Cl. 81-3.00R.
Xerox Corporation: *See—*
Crystal, Richard G., 4,064,312, Cl. 428-447.000.
Gundlach, Robert W., 4,064,514, Cl. 354-3.000.
Haas, Werner E. L.; and Dir, Gary A., 4,064,453, Cl. 324-214.000.
Mailloux, Louis D., 4,063,810, Cl. 355-4.000.
Mammino, Joseph, 4,064,285, Cl. 427-24.000.
Pochan, John M.; and Turner, Sam R., 4,063,947, Cl. 96-1.50N.
Thettu, Raghulinga Reddy; and Lin, Luke C., 4,063,530, Cl. 118-60.000.
Von Hoene, Donald C.; and Magde, John M., 4,063,943, Cl. 96-1.00R.
Von Hoene, Donald C.; and Post, Richard L., 4,063,945, Cl. 96-1.00R.
Yaichner, Ella M.: *See—*
Horton, Robert A.; and Yaichner, Ella M., 4,064,083, Cl. 260-28.50R.
Yamada, Isao; and Shibata, Isamu, to Ricoh Co., Ltd. Control system for D.C. motor. 4,064,443, Cl. 318-331.000.
Yamada, Kyota, to Bodysonic Kabushiki Kaisha. Sound reproduction system and device. 4,064,376, Cl. 179-146.00H.
Yamada, Toshio: *See—*
Sanda, Shougo; Inoue, Tokuta; Oishi, Kiyohiko; and Yamada, Toshio, 4,063,536, Cl. 123-25.00J.
Yamanaka, Seisuke, to Sony Corporation. Solid state color camera. 4,064,532, Cl. 358-44.000.
Yamashita, Yuzo; Kishi, Masahiro; and Ishibashi, Yasumasa, to Mitsubishi Jukogyo Kabushiki Kaisha. Method of injecting ammonia into a flue for waste gases. 4,064,219, Cl. 423-242.000.
Yamazaki, Hiroshi: *See—*
Hagiwara, Yoshiaki; and Yamazaki, Hiroshi, 4,064,524, Cl. 357-24.000.
Yanagawa, Takuma: *See—*
Saika, Daini; Yanagawa, Takuma; Mizuta, Masaaki; and Kadoya, Isamu, 4,064,342, Cl. 536-59.000.
Yanaihara, Noboru; Igarashi, Toshiji; and Kunii, Youichi, to Eisai Co., Ltd. Dopamine derivative compounds, preparation thereof and medicine containing same. 4,064,235, Cl. 424-177.000.
Yang, Kei-Hsiung, to General Electric Company. Photocontrolled ion-flow electron radiography. 4,064,439, Cl. 250-315.00A.
Yang, Shu S.: *See—*
Dorn, Conrad P.; and Yang, Shu S., 4,064,236, Cl. 424-177.000.
Yarbrough, Garrett, to H. K. Porter Company, Inc. Rod gripping tool for applying fasteners. 4,063,443, Cl. 72-391.000.
Yardney Electric Corporation: *See—*
Gunther, Ronald G., 4,063,576, Cl. 141-1.100.
Yasue, Kenji: *See—*
Hazama, Kenichi; Hirose, Isamu; Yasue, Kenji; and Shinoura, Daisuke, 4,064,196, Cl. 260-860.000.
Yates, John Russel: *See—*
Petersen, Bent Riber; and Yates, John Russel, 4,064,008, Cl. 195-6.000.
Yeda Research & Development Co. Ltd.: *See—*
Manassen, Joost; Hodes, Gary; and Cahen, David Ferdinand, 4,064,326, Cl. 429-111.000.
Yih, Roy Y.: *See—*
Bayer, Horst O.; Swithenbank, Colin; and Yih, Roy Y., 4,063,929, Cl. 71-115.000.
Yokota, Hideo, to Canon Kabushiki Kaisha. Telephoto type objective. 4,063,801, Cl. 350-216.000.
Yokotsuka, Tamotsu; Asao, Yasuo; Matsuura, Masaru; and Hashimoto, Hikotaka, to Kikkoman Shoyu Co., Ltd. Method for processing soybeans. 4,064,277, Cl. 426-331.000.
Yokoyama, Takashi; Miyadera, Yasuo; Shito, Nobuhiko; Suzuki, Hiroshi; and Wakashima, Yoshiaki, to Hitachi, Ltd. Method of making a semiconductor device. 4,064,289, Cl. 427-82.000.
Yonetani, Yukio: *See—*
Ogawa, Yasunao; and Yonetani, Yukio, 4,063,894, Cl. 23-230.00B.
Yoshida Kogyo Kabushiki Kaisha: *See—*
Ochiai, Koichi, 4,063,524, Cl. 112-152.000.
Yoshida, Muneaki: *See—*
Maitani, Yoshihisa; Shimoyama, Kunio; Yoshida, Muneaki; Hashimoto, Akihiko; and Kitagawa, Masahiro, 4,064,517, Cl. 354-51.000.
Yoshino, Hironori; and Sato, Kohei, to Matsushita Electric Industrial Co., Ltd. Corona discharge detecting device. 4,064,454, Cl. 324-54.000.
Yost, Charles N.; Bolyard, Millard R.; and Whitmer, Leon M., to Unitrol, Inc. Control system. 4,064,501, Cl. 340-286.00R.
Youmans, Arthur H., to Dresser Industries, Inc. System for logging highly deviated earth boreholes utilizing auxiliary sinker bar assembly. 4,063,592, Cl. 166-67.000.
Young, Ainslie Thomas, Jr.: *See—*
Shackle, Dale Richard; and Young, Ainslie Thomas, Jr., 4,063,754, Cl. 282-27.500.
Young, Charles R.: *See—*
Schuermeyer, Fritz L.; and Young, Charles R., 4,064,492, Cl. 365-184.000.
Young, Clarence W., III: *See—*
Sidebotham, Norman C.; Shoemaker, Paul D.; and Young, Clarence W., III, 4,064,079, Cl. 260-2.300.

Young, Timothy Tung Jen. Noiseless ratchet drive mechanism for the bicycle and the like. 4,063,747, Cl. 280-255.000.
Yuda, Jiro; Morokoshi, Hiroshi; Hori, Michimasa; Ikoma, Mitsuhiro; and Aizawa, Takeshi, to Matsushita Electric Industrial Co., Ltd. Control system for pole-changing-motor-driven compressor. 4,064,420, Cl. 318-224.00A.
Yurko, Joseph A., to Colgate-Palmolive. Stabilized activated percompound bleaching compositions and methods for manufacture thereof. 4,064,062, Cl. 252-99.000.
Zagwyn, Conrad J. Vehicle antitheft device. 4,064,547, Cl. 361-172.000.
Zappia, Anthony T., to Ball Packaging Products, Inc. Apparatus for forming glassware with arc movements between molds. 4,063,918, Cl. 65-229.000.
Zbornik, Vaclav: *See—*
Haenni, Eduard A.; Zbornik, Vaclav; and Gygli, Walter, 4,063,445, Cl. 72-465.000.
Zechnall, Martin: *See—*
Gorille, Ingo; Borst, Wolfgang; Klotzner, Winfried; Ott, Karl; Moller, Heinz; Honig, Gunter; Kiencke, Uwe; Zechnall, Martin; Flaig, Ulrich; Schulz, Alfred; and Pagel, Ernst-Olav, 4,063,539, Cl. 123-117.00D.
Zeitler, Gerhard; Hoehr, Lothar; and Mueller-Tamm, Heinz, to BASF Aktiengesellschaft. Process for the manufacture of shaped articles by graft polymerization. 4,064,198, Cl. 260-878.00R.
Zekulin, Nikita; and Adams, George L., to Envirotech Corporation. Ultrasonic level sensing device. 4,063,457, Cl. 73-290.00V.
Zeller, David M., to Raymond Lee Organization, Inc., The. Loudspeaker assembly with restructured diaphragm including a tweeter driven by a bass amplifier. 4,064,365, Cl. 179-1.00E.
Zemanek, Rudolf. Convertible pool table game apparatus. 4,063,728, Cl. 273-4.00R.
Zenith Radio Corporation: *See—*
Blumenberg, Horst H.; and Guzowski, Kenneth A., 4,063,340, Cl. 29-25.160.
Zeugner, Horst: *See—*
Milkowski, Wolfgang; Zeugner, Horst; von Eickstedt, Klaus-Wolf; and Stuhmer, Werner, 4,064,128, Cl. 260-268.00R.
Zewe, James R.: *See—*
Russell, James B.; Zewe, James R.; and Fruhwald, John M., 4,064,487, Cl. 340-168.00S.
Zimmer Aktiengesellschaft: *See—*
Rothe, Hans Joachim; Heinze, Helmut; Whitehead, Brian D.; and Priepke, Gunther, 4,064,112, Cl. 260-75.00M.
Zimmer, Ronald. Ball retriever. 4,063,769, Cl. 294-19.00A.
Zimmerly, Robert D., to Ladish Co. Fractionator modules having lip seals. 4,064,052, Cl. 210-433.00M.
Zitzow, Clarence R., to Beloit Corporation. Coater for both sides of traveling web. 4,063,531, Cl. 118-122.000.
Zouzoulas, John, to Philadelphia Gear Corporation. Valve protective mechanism for power operated valves. 4,063,707, Cl. 251-79.000.
Zuev, Valentin Alexeevich: *See—*
Gurkov, Konstantin Stepanovich; Nazarov, Nikolai Grigorievich; Cherednikov, Evgeny Nikolaevich; Plavskikh, Vladimir Dmitrievich; Rozhkov, Leonid Georgievich; Tkach, Khaim Berkovich; Grigoraschenko, Vladimir Alexandrovich; Kostylev, Alexandr Dmitrievich; Davydov, Vasily Georgievich; and Zuev, Valentin Alexeevich, 4,063,423, Cl. 61-53.620.
Zvejnieks, Andrejs, to AZS Corporation. Method of recovering liquid and gaseous products of oil shale. 4,063,780, Cl. 299-2.000.

LIST OF REISSUE PATENTEES

TO WHOM

PATENTS WERE ISSUED ON THE 20TH DAY OF DECEMBER, 1977

NOTE.—Arranged in accordance with the first significant character or word of the name (in accordance with city and telephone directory practice).

Baldwin, Thomas I.: *See—*
  Dydzyk, Michael, Re. 29,496, Cl. 366-25.000.
Baldwin, William E.: *See—*
  Dydzyk, Michael, Re. 29,496, Cl. 366-25.000.
Dydzyk, Michael, to Baldwin, Thomas I.; Scrivener, Frank P.; and Baldwin, William E., part interest to each. Apparatus for making hot asphalt paving material. Re. 29,496, Cl. 366-25.000.
Freitag, Herbert, to Stabilus GmbH. Piston rod seal for adjustable pneumatic spring. Re. 29,497, Cl. 267-64.00R.
Hoppe, Walter, to Max-Planck-Gesellschaft zur Forderung der Wissenschaften e.V. Scanning charged beam particle beam microscope. Re. 29,500, Cl. 250-311.000.
Istituto Sieroterapico e Vaccinogeno Toscano "SCLAVO", S.p.A.: *See—*
  Meiattini, Franco, Re. 29,498, Cl. 195-103.50C.
Max-Planck-Gesellschaft zur Forderung der Wissenschaften e.V.: *See—*
  Hoppe, Walter, Re. 29,500, Cl. 250-311.000.
Meiattini, Franco, to Istituto Sieroterapico e Vaccinogeno Toscano "SCLAVO", S.p.A. Process for the enzymatic determination of glucose with a glucose-oxydazed/peroxidazed enzyme system. Re. 29,498, Cl. 195-103.50C.
Reliance Telecommunication Electronics Company: *See—*
  Spencer, Lucian W., Re. 29,499, Cl. 179-175.30R.
Scrivener, Frank P.: *See—*
  Dydzyk, Michael, Re. 29,496, Cl. 366-25.000.
Spencer, Lucian W., to Reliance Telecommunication Electronics Company. On premise telephone loop tester. Re. 29,499, Cl. 179-175.30R.
Stabilus GmbH: *See—*
  Freitag, Herbert, Re. 29,497, Cl. 267-64.00R.

LIST OF PLANT PATENTEES

Callahan, Claud: *See—*
  Howell, Zeb Kenneth, 4,166, Cl. 34.000.
F. Harmon Saville, Nor'East Miniature Roses: *See—*
  Schwartz, Ernest, 4,168, Cl. 8.000.
Howell, Zeb Kenneth, to Callahan, Claud; and McCormick, Marjorie. Apple tree. 4,166, 12-20-77, Cl. 34.000.
Jackson & Perkins Co.: *See—*
  Warriner, William A., 4,167, Cl. 14.000.
McCormick, Marjorie: *See—*
  Howell, Zeb Kenneth, 4,166, Cl. 34.000.
Schwartz, Ernest, to F. Harmon Saville, Nor'East Miniature Roses. Rose plant. 4,168, 12-20-77, Cl. 8.000.
Warriner, William A., to Jackson & Perkins Co. Rose plant. 4,167, 12-20-77, Cl. 14.000.

LIST OF DESIGN PATENTEES

A-T-O Inc.: *See—*
  Gilson, Channing Wallace, 246,700, Cl. D10-106.000.
  Gilson, Channing Wallace, 246,701, Cl. D10-106.000.
Alister, Jack, to U.S. Philips Corporation. Dry shaver or similar article. 246,731, 12-20-77, Cl. D28-50.000.
American Optical Corporation: *See—*
  Canavan, Richard W., III, 246,720, Cl. D16-65.000.
  Canavan, Richard W., III, 246,721, Cl. D16-65.000.
American Seating Company: *See—*
  Blodee, Leif, 246,685, Cl. D6-73.000.
Amerock Corporation: *See—*
  Clayton, LaVerne E., 246,689, Cl. D8-307.000.
  Clayton, LaVerne E., 246,690, Cl. D8-307.000.
  Clayton, LaVerne E., 246,694, Cl. D8-319.000.
  Clayton, LaVerne E., 246,695, Cl. D8-319.000.
  Clayton, LaVerne E., 246,696, Cl. D8-350.000.
  Tegner, Raymond U. H., 246,692, Cl. D8-316.000.
  Tegner, Raymond U. H., 246,693, Cl. D8-320.000.
Aquology Pet Corporation: *See—*
  Horvath, Tibor, 246,714, Cl. D15-8.000.
Baker, John Geoffrey, to Baker-Martin Enterprises Limited. Lamp shade. 246,742, 12-20-77, Cl. D48-16.00R.
Baker-Martin Enterprises Limited: *See—*
  Baker, John Geoffrey, 246,742, Cl. D48-16.00R.
Barrett, Bernard R.; and Duncan, Alfred D. Kite. 246,736, 12-20-77, Cl. D34-15.0AF.
Barrett, Bernard R.; and Duncan, Alfred D. Kite. 246,737, 12-20-77, Cl. D34-15.0AF.
Becker, Robert W.; Boldt, Melvin H.; and Chuboff, David P., to Zenith Radio Corporation. Television receiver. 246,713, 12-20-77, Cl. D14-77.000.
Blodee, Leif, to American Seating Company. Chair. 246,685, 12-20-77, Cl. D6-73.000.
Boldt, Melvin H., to National Presto Industries, Inc. Deep fry cooker. 246,686, 12-20-77, Cl. D7-94.000.
Boldt, Melvin H.: *See—*
  Becker, Robert W.; Boldt, Melvin H.; and Chuboff, David P., 246,713, Cl. D14-77.000.
Bonifant, Bern M., to Flex-a-lite Corporation. Fan for internal combustion engines. 246,725, 12-20-77, Cl. D23-165.000.
Cagle, Donald D. Combined picnic table and bench or similar article. 246,683, 12-20-77, Cl. D6-45.000.
Canavan, Richard W., III, to American Optical Corporation. Pair of spectacles. 246,720, 12-20-77, Cl. D16-65.000.
Canavan, Richard W., III, to American Optical Corporation. Pair of spectacles. 246,721, 12-20-77, Cl. D16-65.000.
Carre, Alain, to Waterman S.A. Pen. 246,723, 12-20-77, Cl. D19-49.000.
Cartabiano, Michael C. Toy house. 246,739, 12-20-77, Cl. D34-15.0LL.
Cassia, Antonio Macchi, to Steiner American Corporation. Paper towel dispenser. 246,744, 12-20-77, Cl. D52-2.00C.
Charlop, Herbert. Coin sorter. 246,745, 12-20-77, Cl. D52-4.00R.
Christian Dior, S.A.R.L.: *See—*
  Zimmermann, Hilde, 246,718, Cl. D16-65.000.
  Zimmermann, Hilde, 246,719, Cl. D16-65.000.
Chuboff, David P.: *See—*
  Becker, Robert W.; Boldt, Melvin H.; and Chuboff, David P., 246,713, Cl. D14-77.000.
Clayton, LaVerne E., to Amerock Corporation. Pull. 246,689, 12-20-77, Cl. D8-307.000.
Clayton, LaVerne E., to Amerock Corporation. Pull. 246,690, 12-20-77, Cl. D8-307.000.
Clayton, LaVerne E., to Amerock Corporation. Pull. 246,694, 12-20-77, Cl. D8-319.000.
Clayton, LaVerne E., to Amerock Corporation. Pull. 246,695, 12-20-77, Cl. D8-319.000.
Clayton, LaVerne E., to Amerock Corporation. Escutcheon. 246,696, 12-20-77, Cl. D8-350.000.
Clement, Andrew B. Mobile mixer. 246,715, 12-20-77, Cl. D15-19.000.
Combi Co., Ltd.: *See—*
  Nakao, Shinroku, 246,682, Cl. D6-7.000.
  Nakao, Shinroku, 246,738, Cl. D34-15.00B.

Conair Corporation: *See—*
  Tomaro, Patrick M., 246,730, Cl. D28-13.000.
Daenen, Robert H. C. M., to Dart Industries, Inc. Wheel or the like. 246,735, 12-20-77, Cl. D34-15.0AJ.
Dart Industries, Inc.: *See—*
  Daenen, Robert H. C. M., 246,735, Cl. D34-15.0AJ.
DeWitt, Anne T.: *See—*
  Schulte, Agnes T.; DeWitt, Anne T.; and English, Suzette K., 246,743, Cl. D87-1.00R.
Duncan, Alfred D.: *See—*
  Barrett, Bernard R.; and Duncan, Alfred D., 246,736, Cl. D34-15.0AF.
  Barrett, Bernard R.; and Duncan, Alfred D., 246,737, Cl. D34-15.0AF.
English, Suzette K.: *See—*
  Schulte, Agnes T.; DeWitt, Anne T.; and English, Suzette K., 246,743, Cl. D87-1.00R.
Flex-a-lite Corporation: *See—*
  Bonifant, Bern M., 246,725, Cl. D23-165.000.
Fox, J. DeWitt. Surgeon's holder for hemostatic agents. 246,726, 12-20-77, Cl. D24-31.000.
Gilson, Channing Wallace, to A-T-O Inc. Smoke detector. 246,700, 12-20-77, Cl. D10-106.000.
Gilson, Channing Wallace, to A-T-O Inc. Fire alarm. 246,701, 12-20-77, Cl. D10-106.000.
Graetz, Edward A., to Graetz Manufacturing, Inc. Chain link. 246,697, 12-20-77, Cl. D8-499.000.
Graetz Manufacturing, Inc.: *See—*
  Graetz, Edward A., 246,697, Cl. D8-499.000.
Greenburg, Charles: *See—*
  Ophir, Jack, 246,704, Cl. D11-87.000.
Holkesvick, Edgar E. Massage exerciser. 246,727, 12-20-77, Cl. D24-36.000.
Horvath, Tibor, to Aquology Pet Corporation. Aquarium pump. 246,714, 12-20-77, Cl. D15-8.000.
Hursh, Jack E. Hat bill and brim. 246,681, 12-20-77, Cl. D2-260.000.
International Business Machines Corporation: *See—*
  Kneale, Collan Blendon, 246,711, Cl. D14-40.000.
K-S-H, Inc.: *See—*
  Korn, William W., 246,741, Cl. D48-16.00A.
Kabushiki Kaisha Ariga Golf Group Seisakusho: *See—*
  Morita, Fukashi, 246,734, Cl. D34-5.0GC.
Kingman-White, Inc.: *See—*
  Raahauge, Jerald C., 246,722, Cl. D19-41.000.
Kneale, Collan Blendon, to International Business Machines Corporation. Data-collection apparatus. 246,711, 12-20-77, Cl. D14-40.000.
Korn, William W., to K-S-H, Inc. Prismatic light-transmitting panel. 246,741, 12-20-77, Cl. D48-16.00A.
Lohr, Raymond J. Toy wheeled figure. 246,740, 12-20-77, Cl. D34-15.00D.
Martorano, John. Vendor's cart body. 246,705, 12-20-77, Cl. D12-22.000.
McKee, Donald S., to Scott & Fetzer Company, The. Combined air foil and retractable awning. 246,706, 12-20-77, Cl. D12-155.000.
Minolta Camera Kabushiki Kaisha: *See—*
  Ooya, Tetsuro, 246,717, Cl. D16-6.000.
Morita, Fukashi, to Kabushiki Kaisha Ariga Golf Group Seisakusho. Golf club. 246,734, 12-20-77, Cl. D34-5.0GC.
Morris, Glenn H. Reversible safety cap and screw cap for containers. 246,698, 12-20-77, Cl. D9-284.000.
Murphy, Michael K. Combined breast shield and milk collector. 246,729, 12-20-77, Cl. D24-49.000.
Nakao, Shinroku, to Combi Co., Ltd. Multi-purpose baby reclining seat with table board. 246,682, 12-20-77, Cl. D6-7.000.
Nakao, Shinroku, to Combi Co., Ltd. Toy wheeled figure. 246,738, 12-20-77, Cl. D34-15.00B.
Nash, Stanley P., to Schweiger Industries, Inc. Seat. 246,684, 12-20-77, Cl. D6-63.000.
Nassau, Murray R. Rod for unlocking and locking the door of a vehicle. 246,688, 12-20-77, Cl. D8-88.000.
National Presto Industries, Inc.: *See—*
  Boldt, Melvin H., 246,686, Cl. D7-94.000.
Ooya, Tetsuro, to Minolta Camera Kabushiki Kaisha. Camera or similar article. 246,717, 12-20-77, Cl. D16-6.000.
Ophir, Jack, to Greenburg, Charles. Heart-shaped fastener. 246,704, 12-20-77, Cl. D11-87.000.
Pepper, Gregory: *See—*
  Shugrue, Michael T., 246,712, Cl. D14-68.000.
Picataci, Vincent J. Zodiacal betting cloth. 246,732, 12-20-77, Cl. D34-5.0SS.
Picataci, Vincent J. Dodecahedron die with zodiacal figures. 246,733, 12-20-77, Cl. D34-5.0DT.
Pingel, Dale M. Roof framing tool for carpenters. 246,699, 12-20-77, Cl. D10-65.000.
Pomco, Inc.: *See—*
  Pomper, William R., 246,709, Cl. D13-11.000.
Pomper, William R., to Pomco, Inc. Voltage converter or the like. 246,709, 12-20-77, Cl. D13-11.000.
Raahauge, Jerald C., to Kingman-White, Inc. Disposable recording pen. 246,722, 12-20-77, Cl. D19-41.000.
Regie Nationale des Usines Renault: *See—*
  Tixier, Michel, 246,707, Cl. D12-196.000.
  Tixier, Michel, 246,708, Cl. D12-184.000.
Schofield, Sidney A. Pendant. 246,703, 12-20-77, Cl. D11-79.000.
Schulte, Agnes T.; DeWitt, Anne T.; and English, Suzette K. Child's tooth receptacle. 246,743, 12-20-77, Cl. D87-1.00R.
Schweiger Industries, Inc.: *See—*
  Nash, Stanley P., 246,684, Cl. D6-63.000.
Scott & Fetzer Company, The: *See—*
  McKee, Donald S., 246,706, Cl. D12-155.000.
Selva, Guy. Barbecue-table. 246,687, 12-20-77, Cl. D7-107.000.
Shugrue, Michael T., to Pepper, Gregory. Detachable ratio for helmets. 246,712, 12-20-77, Cl. D14-68.000.
Steiner American Corporation: *See—*
  Cassia, Antonio Macchi, 246,744, Cl. D52-2.00C.
Takahashi, Nagashige. Dial control knob for medical instrument. 246,691, 12-20-77, Cl. D8-310.000.
Tegner, Raymond U. H., to Amerock Corporation. Pull. 246,692, 12-20-77, Cl. D8-316.000.
Tegner, Raymond U. H., to Amerock Corporation. Pull. 246,693, 12-20-77, Cl. D8-320.000.
Thomasen, Norman Leonard. Loudspeaker cabinet. 246,710, 12-20-77, Cl. D14-33.000.
Thornley, Gordon G. Swimming pool guard buoy. 246,702, 12-20-77, Cl. D10-107.000.
Tixier, Michel, to Regie Nationale des Usines Renault. Car rear side door panel. 246,707, 12-20-77, Cl. D12-196.000.
Tixier, Michel, to Regie Nationale des Usines Renault. Car front fender panel. 246,708, 12-20-77, Cl. D12-184.000.
Tomaro, Patrick M., to Conair Corporation. Electric hair dryer. 246,730, 12-20-77, Cl. D28-13.000.
U.S. Philips Corporation: *See—*
  Alister, Jack, 246,731, Cl. D28-50.000.
van der Lely, Cornelis. Cultivator tine. 246,716, 12-20-77, Cl. D15-29.000.
Waterman S.A.: *See—*
  Carre, Alain, 246,723, Cl. D19-49.000.
Willinger, Allan H., to Willinger Bros., Inc. Aquarium filter. 246,724, 12-20-77, Cl. D23-4.000.
Willinger Bros., Inc.: *See—*
  Willinger, Allan H., 246,724, Cl. D23-4.000.
Wormser, Robert S. Swimming exercise and therapeutic pool. 246,728, 12-20-77, Cl. D24-38.000.
Zenith Radio Corporation: *See—*
  Becker, Robert W.; Boldt, Melvin H.; and Chuboff, David P., 246,713, Cl. D14-77.000.
Zimmermann, Hilde, to Christian Dior, S.A.R.L. Eyeglass frame. 246,718, 12-20-77, Cl. D16-65.000.
Zimmermann, Hilde, to Christian Dior, S.A.R.L. Eyeglass frame. 246,719, 12-20-77, Cl. D16-65.000.

CLASSIFICATION OF PATENTS

ISSUED DECEMBER 20, 1977

NOTE.—First number, class; second number, subclass; third number, patent number

CLASS 2	
265	4,063,312
338	4,063,313
CLASS 3	
1.91	4,063,314
CLASS 4	
10	4,063,315
233	4,063,316
255	4,063,317
CLASS 5	
327 R	4,063,318
334 R	4,063,319
CLASS 8	
1 A	4,063,877
2.5 A	4,063,878
	4,063,879
41 B	4,063,881
41 R	4,063,880
92	4,063,882
115.5	4,063,884
115.7	4,063,885
116 P	4,063,883
127	4,063,886
130.1	4,063,887
149	4,063,888
168 C	4,063,889
CLASS 9	
2 A	4,063,320
7	4,063,321
8 R	4,063,322
14	4,063,323
CLASS 13	
31	4,064,352
CLASS 15	
53 AB	4,063,327
100	4,063,324
230.11	4,063,325
250.42	4,063,328
306 A	4,063,329
327 R	4,063,326
CLASS 16	
142	4,063,330
CLASS 17	
45	4,063,331
62	4,063,332
CLASS 21	
54 R	4,063,890
CLASS 23	
230 B	4,063,892
	4,063,894
230 PC	4,063,891
230 R	4,063,893
232 R	4,063,895
254 E	4,063,897
	4,063,898
254 R	4,063,896
284	4,063,899
288 F	4,063,900
CLASS 24	
137 A	4,063,333
213 B	4,063,334
221 R	4,063,335
277	4,063,336
CLASS 27	
2	4,063,337
CLASS 28	
221	4,063,338
CLASS 29	
25.15	4,063,339
25.16	4,063,340
25.42	4,063,341
227	4,063,342
427	4,063,343
455 R	4,063,344
522	4,063,345
527.7	4,063,346
564.1	4,063,347
578	4,063,901
588	4,063,348
623.2	4,063,902
627	4,063,349
628	4,063,350
629	4,063,351
630 R	4,063,352
CLASS 30	
30	4,063,353
47	4,063,354
96	4,063,355
162	4,063,356
346.58	4,063,357
371	4,063,358
379.5	4,063,359
CLASS 32	
14 A	4,063,360
CLASS 33	
147 J	4,063,362
182	4,063,363
203.14	4,063,364
288	4,063,365
396	4,063,366
CLASS 34	
15	4,063,367
CLASS 35	
25	4,063,368
35 A	4,063,370
35 E	4,063,369
CLASS 36	
3 B	4,063,371
127	4,063,372
CLASS 37	
115	4,063,373
129	4,063,361
142.5	4,063,374
190	4,063,375
CLASS 38	
41	4,063,376
CLASS 40	
28 C	4,063,377
156	4,063,378
CLASS 42	
75 D	4,063,379
CLASS 43	
11	4,063,380
CLASS 44	
2	4,063,903
40	4,063,904
CLASS 46	
22	4,063,381
74 D	4,063,382
CLASS 47	
1.1	4,063,383
58	4,063,384
	4,063,385
	4,063,386
67	4,063,387
CLASS 48	
180 R	4,063,905
CLASS 49	
363	4,063,388
370	4,063,389
CLASS 51	
101 LG	4,063,390
289 R	4,063,906
295	4,063,907
307	4,063,908
309 R	4,063,909
413	4,063,910
CLASS 52	
1	4,063,391
9	4,063,392
245	4,063,393
294	4,063,394
309.5	4,063,395
489	4,063,396
684	4,063,397
CLASS 53	
31	4,063,398
59 R	4,063,399
180 R	4,063,400
183	4,063,401
258	4,063,402
379	4,063,403
CLASS 54	
8	4,063,404
CLASS 55	
67	4,063,911
74	4,063,912
274	4,063,913
CLASS 56	
208	4,063,405
330	4,063,406
400.14	4,063,407
CLASS 57	
58.54	4,063,408
CLASS 58	
23 R	4,063,409
38 R	4,063,410
125 B	4,063,411
CLASS 59	
7	4,063,412
35 CP	4,063,413
CLASS 60	
39.05	4,063,414
261	4,063,415
641	4,063,416
	4,063,417
	4,063,418
	4,063,419
671	4,063,420
CLASS 61	
53	4,063,422
53.62	4,063,423
63	4,063,424
85	4,063,425
94	4,063,426
100	4,063,427
102	4,063,421
	4,063,428
105	4,063,429
113	4,063,430
CLASS 62	
239	4,063,431
419	4,063,432
CLASS 64	
11 R	4,063,433
CLASS 65	
2	4,063,914
11 R	4,063,915
21	4,063,916
30 R	4,063,917
229	4,063,918
CLASS 70	
34	4,063,434
38 A	4,063,435
133	4,063,436
358	4,063,437
CLASS 71	
11	4,063,919
34	4,063,920
76	4,063,921
86	4,063,922
	4,063,923
90	4,063,924
92	4,063,925
94	4,063,926
	4,063,927
	4,063,928
115	4,063,929
CLASS 72	
6	4,063,438
45	4,063,439
148	4,063,440
151	4,063,441
166	4,063,442
391	4,063,443
459	4,063,444
465	4,063,445
CLASS 73	
1 G	4,063,446
27 R	4,063,447
32 A	4,063,448
37.5	4,063,449
73	4,063,452
103	4,063,453
141 A	4,063,454
228	4,063,455
	4,063,456
290 V	4,063,457
355 R	4,063,458
397	4,063,459
425.6	4,063,460
462	4,063,461
483	4,063,462
579	4,063,450
618	4,063,451
CLASS 74	
231 J	4,063,463
331	4,063,464
436	4,063,465
574	4,063,466
689	4,063,467
763	4,063,468
781 B	4,063,469
785	4,063,470
CLASS 75	
3	4,063,930
10 R	4,063,931
61	4,063,932
101 R	4,063,933
122	4,063,934
128 C	4,063,935
141	4,063,936
172 G	4,063,937
205	4,063,938
208 R	4,063,939
213	4,063,940
226	4,063,941
251	4,063,942
256	4,063,944
CLASS 76	
112	4,063,471
CLASS 81	
3 R	4,063,472
3.37	4,063,473
52.4 R	4,063,474
57.22	4,063,475
CLASS 83	
37	4,063,476
40	4,063,477
100	4,063,478
117	4,063,479
176	4,063,480
199	4,063,481
207	4,063,482
382	4,063,483
CLASS 84	
1.24	4,063,484
CLASS 89	
1.816	4,063,485
7	4,063,486
130	4,063,487
CLASS 90	
11 D	4,063,488
CLASS 91	
445	4,063,489
467	4,063,490
CLASS 92	
130 A	4,063,491
CLASS 93	
49 R	4,063,492
58.2 R	4,063,493
77 FT	4,063,494
CLASS 96	
1 R	4,063,943
	4,063,945
1.2	4,063,946
1.5 N	4,063,947
1.6	4,063,948
27 E	4,063,949
66.3	4,063,950
94 R	4,063,951
111	4,063,952
115 R	4,063,953
CLASS 98	
36	4,063,495
CLASS 99	
419	4,063,496
423	4,063,497
CLASS 100	
176	4,063,498
215	4,063,499
CLASS 101	
25	4,063,500
123	4,063,502
	4,063,503
128.1	4,063,501
153	4,063,504
228	4,063,505
407 BP	4,063,506
467	4,063,507
CLASS 102	
7.2	4,063,508
20	4,063,509
23	4,063,510
38	4,063,511
52	4,063,512
70.2 R	4,063,513
79	4,063,514
89 CD	4,063,515
CLASS 104	
12	4,063,516
35	4,063,517
CLASS 106	
38.3	4,063,954
39.6	4,063,955
288 B	4,063,956
304	4,063,957
308 Q	4,063,958
CLASS 108	
6	4,063,518
CLASS 109	
8	4,063,519
66	4,063,520
CLASS 110	
8 A	4,063,521
22 A	4,063,522
CLASS 111	
7	4,063,523
CLASS 112	
152	4,063,524
158 A	4,063,525
CLASS 114	
220	4,063,526
CLASS 118	
5	4,063,527
7	4,063,528
49.1	4,063,529
60	4,063,530
122	4,063,531
429	4,063,532
658	4,063,533
CLASS 122	
510	4,063,534
CLASS 123	
8.13	4,063,535
25 J	4,063,536
32 B	4,063,537
117 D	4,063,539
117 R	4,063,538
119 R	4,063,540
139 AW	4,063,541
CLASS 125	
30 WD	4,063,542
CLASS 126	
270	4,063,543
	4,063,544
271	4,063,545
	4,063,546
	4,063,547
CLASS 127	
19	4,063,959
42	4,063,960
CLASS 128	
2 R	4,063,548
	4,063,550
2 V	4,063,549
2.05 P	4,063,551
136	4,063,552
214 F	4,063,553
214 R	4,063,554
	4,063,555
276	4,063,556
	4,063,557
284	4,063,558
287	4,063,559
303.1	4,063,560
351	4,063,561
594	4,063,562
CLASS 131	
21 D	4,063,563
CLASS 134	
4	4,063,961
8	4,063,962
66	4,063,564
104	4,063,565
CLASS 135	
1 R	4,063,566
15 PE	4,063,567
CLASS 136	
89 P	4,063,963
CLASS 137	
270	4,063,568
344	4,063,569
454.2	4,063,570
599.1	4,063,571
862	4,063,572
CLASS 138	
155	4,063,573
CLASS 139	
29	4,063,574
370.2	4,063,575
CLASS 141	
1.1	4,063,576
CLASS 142	
49	4,063,577
CLASS 144	
178	4,063,578
246 R	4,063,579
CLASS 145	
51	4,063,580
CLASS 148	
1.5	4,063,964
	4,063,965
	4,063,966
	4,063,967
6.15 R	4,063,968
6.27	4,063,969
103	4,063,970
105	4,063,971
171	4,063,972
175	4,063,974
188	4,063,973
CLASS 149	
92	4,063,975
CLASS 150	
52 G	4,063,581
CLASS 151	
41.7	4,063,582
CLASS 152	
241	4,063,583
365	4,063,584
CLASS 156	
44	4,063,976

69 4,063,977
82 4,063,978
123 R 4,063,979
165 4,063,980
245 4,063,981
254 4,063,982
306 4,063,983
359 4,063,985
394 4,063,986
417 4,063,987
429 4,063,988
453 4,063,989
580.2 4,063,990
645 4,063,991
653 4,063,992
659 4,063,993

CLASS 159
49 4,063,994

CLASS 160
135 4,063,585

CLASS 162
112 4,063,995
210 4,063,996
340 4,063,997
348 4,063,998

CLASS 164
207 4,063,586

CLASS 165
8 4,063,587
97 4,063,588
104 F 4,063,589
135 4,063,590
167 4,063,591

CLASS 166
67 4,063,592
317 4,063,593
325 4,063,594

CLASS 169
60 4,063,595

CLASS 172
65 4,063,596
126 4,063,597
705 4,063,598

CLASS 173
1 4,063,599
12 4,063,600
93.6 4,063,601

CLASS 174
14 R 4,064,353
28 4,064,354
47 4,064,355
68.5 4,064,356
4,064,357
70 S 4,064,358
107 4,064,359

CLASS 175
7 4,063,602
65 4,063,603

CLASS 176
28 4,063,999
30 4,064,000
38 4,064,001
4,064,002
4,064,003
78 4,064,004
87 4,064,005

CLASS 177
25 4,063,604
225 4,063,605

CLASS 178
3 4,064,360
69.1 4,064,361

CLASS 179
1 B 4,064,364
1 E 4,064,365
1 P 4,064,362
1 SA 4,064,363
2 A 4,064,367
2 R 4,064,366
5 R 4,064,368
15 BA 4,064,370
15 BF 4,064,369
18 DA 4,064,372
18 FF 4,064,371
99 4,064,373
100.11 4,064,374
110 A 4,064,375
146 H 4,064,376
170 NC 4,064,377
170.2 4,064,378
4,064,379
175.3 R Re.29,499

CLASS 180
1 R 4,063,606

6.5 4,063,607
25 R 4,063,608
70 R 4,063,609
114 4,063,610
119 4,063,611
195 4,063,612

CLASS 181
119 4,063,613
152 4,063,614

CLASS 182
5 4,063,615
17 4,063,616

CLASS 184
15 R 4,063,617
105 A 4,063,618

CLASS 187
17 4,063,619
29 R 4,063,620

CLASS 188
72.6 4,063,621
153 R 4,063,622

CLASS 192
3.31 4,063,623
4 A 4,063,624
17 R 4,063,625
43.1 4,063,626
131 R 4,063,627

CLASS 193
10 4,063,628

CLASS 194
1 K 4,063,629

CLASS 195
1.8 4,064,006
4,064,007
6 4,064,008
51 R 4,064,009
62 4,064,010
65 4,064,011
80 R 4,064,012
4,064,013
96 4,064,014
103.5 C Re.29,498
108 4,064,015

CLASS 197
53 4,063,630
142 4,063,631

CLASS 198
374 4,063,632
412 4,064,016
455 4,063,633
478 4,063,634
531 4,063,635
781 4,063,636

CLASS 200
16 A 4,064,381
16 C 4,064,380
19 R 4,064,382
144 B 4,064,383
4,064,384

CLASS 201
1 4,064,017
12 4,064,018

CLASS 204
15 4,064,019
38 E 4,064,020
98 4,064,021
105 R 4,064,022
130 4,064,023
157.1 R 4,064,024
158 R 4,064,025
159.13 4,064,027
159.19 4,064,026
181 4,064,028
192 E 4,064,030
192 S 4,064,029
256 4,064,031
270 4,064,032
275 4,064,033
286 4,064,034
290 R 4,064,035

CLASS 206
0.82 4,063,639
8 4,063,637
63.3 4,063,638
231 4,063,640
484 4,063,641

CLASS 208
46 4,064,036
120 4,064,037
4,064,038
160 4,064,039

CLASS 209
73 4,063,642
82 4,063,643
111.6 4,063,644
122 4,063,645

CLASS 210
22 R 4,064,040
31 C 4,064,041
40 4,064,042
4,064,043
58 4,064,044
81 4,064,045
94 4,064,046
96 R 4,064,047
160 4,064,048
247 4,064,049
293 4,064,050
389 4,064,051
433 M 4,064,052
497 FB 4,064,053
536 4,064,054

CLASS 211
4 4,063,646
19 4,063,647
45 4,063,648

CLASS 212
39 R 4,063,649

CLASS 214
1 BB 4,063,650
4,063,651
6 B 4,063,652
16.4 A 4,063,653
17 DA 4,063,654
62 A 4,063,655
4,063,656
152 4,063,657
314 4,063,658
450 4,063,659

CLASS 219
56 4,064,385
68 4,064,386
217 4,064,387

CLASS 220
3.6 4,063,660
293 4,063,661

CLASS 222
31 4,063,662
52 4,063,663
70 4,063,664
129 4,063,665
455 4,063,666
470 4,063,667
512 4,063,668

CLASS 223
87 4,063,669
92 4,063,670

CLASS 226
76 4,063,671

CLASS 227
10 4,063,672

CLASS 228
1 R 4,063,673
114 4,063,676
173 E 4,063,674
178 4,063,675
242 4,063,677

CLASS 229
39 R 4,063,678
41 C 4,063,679

CLASS 232
1 D 4,063,680
34 4,063,681

CLASS 235
61 A 4,064,388
92 SB 4,064,391
431 4,064,389
470 4,064,390

CLASS 236
87 4,063,682

CLASS 239
265.11 4,063,684
265.17 4,063,685
404 4,063,686

CLASS 241
110 4,063,687

CLASS 242
18 DD 4,063,688
46.5 4,063,689
54 R 4,063,690
4,063,691
56.9 4,063,692

67.1 R 4,063,693
85 4,063,694
107.4 A 4,063,695
125.1 4,063,696
131 4,063,697

CLASS 244
102 R 4,063,698

CLASS 246
63 R 4,063,699

CLASS 248
62 4,063,700
293 4,063,701
345.1 4,063,702
439 4,063,703
515 4,063,704

CLASS 249
80 4,063,705

CLASS 250
199 4,064,434
231 SE 4,064,435
253 4,064,436
273 4,064,437
308 4,064,438
311 Re.29,500
315 A 4,064,439
359 4,064,440
363 S 4,064,441
456 4,064,401
504 4,064,402

CLASS 251
4 4,063,706
79 4,063,707
149.4 4,063,708
173 4,063,709
248 4,063,710

CLASS 252
8.5 C 4,064,055
4,064,056
8.6 4,064,057
49.9 4,064,059
56 S 4,064,058
89 R 4,064,060
91 4,064,061
99 4,064,062
135 4,064,063
188.3 CL 4,064,064
192 4,064,065
301.6 R 4,064,066
355 4,064,067
364 4,064,068
429 B 4,064,069
435 4,064,070
455 R 4,064,071
464 4,064,072
465 4,064,073
506 4,064,074
511 4,064,075
542 4,064,076

CLASS 254
134.3 R 4,063,711
164 4,063,712

CLASS 256
13.1 4,063,713
24 4,063,714

CLASS 260
2 EN 4,064,078
2 H 4,064,077
2.3 4,064,079
8 4,064,080
17.5 4,064,081
27 EV 4,064,082
28.5 R 4,064,083
29.2 R 4,064,084
4,064,086
29.3 4,064,088
29.4 R 4,064,089
4,064,090
29.6 HN 4,064,091
29.6 PM 4,064,092
29.6 RB 4,064,087
29.7 PT 4,064,093
29.7 R 4,064,085
32.8 A 4,064,094
37 R 4,064,095
4,064,097
37 SB 4,064,096
40 R 4,064,098
42.18 4,064,099
45.75 B 4,063,984
4,064,105
45.8 N 4,064,102
45.8 R 4,064,100
45.85 H 4,064,101
45.9 D 4,064,103
45.9 NP 4,064,104
45.95 C 4,064,106
47 C 4,064,108

47 CB 4,064,107
61 4,064,109
75 M 4,064,111
4,064,112
75 NB 4,064,110
78 A 4,064,113
79.1 4,064,114
4,064,115
97.6 4,064,117
112.5 R 4,064,118
123.5 4,064,119
239 A 4,064,120
239 B 4,064,121
250 B 4,064,124
258 4,064,125
260 4,064,126
266 4,064,127
268 R 4,064,128
279 QA 4,064,129
285.5 4,064,130
287 K 4,064,131
293.62 4,064,132
293.79 4,064,133
295 CA 4,064,134
302 S 4,064,135
304 C 4,064,136
306.7 C 4,064,137
313.1 4,064,139
326.5 FL 4,064,140
327 B 4,064,141
332.3 R 4,064,142
343 4,064,143
4,064,144
346.11 4,064,145
348.16 4,064,146
369 4,064,147
397.45 4,064,148
406 4,064,149
413 4,064,150
448 R 4,064,153
448.2 E 4,064,154
448.2 N 4,064,151
448.8 R 4,064,155
449.6 M 4,064,152
4,064,156
453 SP 4,064,157
465 F 4,064,158
465.5 R 4,064,159
502.4 R 4,064,163
502.5 4,064,164
511 4,064,166
511 4,064,167
514 D 4,064,165
556 A 4,064,168
564 R 4,064,169
570 D 4,064,170
581 4,064,171
583 K 4,064,172
586 C 4,064,174
586 E 4,064,173
586 P 4,064,175
590 D 4,064,176
590 FB 4,064,177
607 AR 4,064,178
609 F 4,064,179
611 F 4,064,180
4,064,181
615 B 4,064,182
617 A 4,064,183
617 R 4,064,184
4,064,185
618 H 4,064,186
669 R 4,064,187
672 R 4,064,188
676 R 4,064,189
681.5 R 4,064,190
850 4,064,191
857 PE 4,064,193
857 UN 4,064,192
859 R 4,064,194
860 4,064,195
4,064,196
876 R 4,064,197
878 R 4,064,198
879 4,064,199
880 R 4,064,116
979 4,064,200

CLASS 261
34 A 4,064,201
44 R 4,064,202
99 4,064,203

CLASS 264
.5 4,064,204
25 4,064,205
26 4,064,206
29.6 4,064,207
39 4,064,208
61 4,064,209
94 4,064,210
95 4,064,211
117 4,064,212
134 4,064,213
147 4,064,214
236 4,064,215
263 4,064,216

CLASS 266
130 4,063,719
167 4,063,720
204 4,063,721
273 4,063,722

CLASS 267
64 R Re.29,497
131 4,063,723

CLASS 271
277 4,063,724

CLASS 272
113 4,063,725
130 4,063,726
136 4,063,727

CLASS 273
4 R 4,063,728
25 4,063,729
29 A 4,063,730
32 B 4,063,731
72 A 4,063,732
80 C 4,063,733
131 AD 4,063,734
134 AC 4,063,735
157 R 4,063,736
174 4,063,737
176 A 4,063,738
181 F 4,063,739
183 B 4,063,740

CLASS 277
37 4,063,741
53 4,063,742
63 4,063,743

CLASS 280
16 4,063,746
42 4,063,744
43.23 4,063,745
255 4,063,747
411 C 4,063,748
423 R 4,063,749
475 4,063,750
605 4,063,751
624 4,063,752
637 4,063,753

CLASS 282
27.5 4,063,754

CLASS 285
53 4,063,755
84 4,063,756
149 4,063,757
177 4,063,758
189 4,063,759
242 4,063,760
275 4,063,761

CLASS 290
23 R 4,063,762
52 4,064,403

CLASS 292
39 4,063,763
256.5 4,063,764
335 4,063,765
336 4,063,766

CLASS 294
16 4,063,767
19 A 4,063,769
19 R 4,063,768
81 SF 4,063,770
87.2 4,063,771

CLASS 296
1 S 4,063,772
91 4,063,773
137 E 4,063,774

CLASS 297
201 4,063,775
361 4,063,776
388 4,063,777
389 4,063,778

CLASS 298
22 P 4,063,779

CLASS 299
2 4,063,780
34 4,063,781
4,063,782

CLASS 301
37 P 4,063,783

CLASS 303
69 4,063,784
115 4,063,785

CLASS 307
141.4 4,064,404
205 4,064,405

228 4,064,406
268 4,064,407
351 4,064,408

CLASS 308
1 A 4,063,786
26 4,063,787

CLASS 310
211 4,064,410
306 4,064,409

CLASS 312
7 R 4,063,788

CLASS 313
32 4,064,411
318 4,064,412

CLASS 315
77 4,064,413
208 4,064,414
209 T 4,064,415
261 4,064,416
309 4,064,417
348 4,064,418

CLASS 318
179 4,064,419
224 A 4,064,420
254 4,064,442
331 4,064,443
561 4,064,444
578 4,064,445
4,064,446

CLASS 320
2 4,064,447

CLASS 323
22 T 4,064,448
48 4,064,449

CLASS 324
15 4,064,450
54 4,064,454
61 R 4,064,455
115 4,064,456
150 4,064,457
202 4,064,452
207 4,064,451
214 4,064,453

CLASS 325
54 4,064,458
67 4,064,459
308 4,064,460
470 4,064,461

CLASS 330
2 4,064,462
53 4,064,464
257 4,064,463

CLASS 331
94.5 D 4,064,466
94.5 PE 4,064,465
108 D 4,064,467
116 R 4,064,468

CLASS 335
6 4,064,469
196 4,064,470
229 4,064,471

CLASS 336
65 4,064,472
83 4,064,473
139 4,064,474

CLASS 338
20 4,064,475
41 4,064,476
51 4,064,477

CLASS 339
3 S 4,063,789
5 L 4,063,792
16 R 4,063,790
17 CF 4,063,791
60 R 4,063,793
119 R 4,063,683
230 R 4,063,794

CLASS 340
3 C 4,064,478
7 R 4,064,479
15.5 GC 4,064,480
15.5 TA 4,064,481
58 4,064,482
146.1 AL 4,064,483
146.3 AG 4,064,484
147 R 4,064,485
147 SY 4,064,486
168 S 4,064,487
171 R 4,064,488
197 4,064,497
237 R 4,064,498
258 C 4,064,499
267 R 4,064,500
286 R 4,064,501
324 R 4,064,502
325 4,064,503
347 DA 4,064,506
347 DD 4,064,505
347 P 4,064,504
384 E 4,064,507
409 4,064,508
411 4,064,509

CLASS 343
7 A 4,064,511
7.5 4,064,510

CLASS 346
33 R 4,064,512
75 4,064,513

CLASS 350
3.5 4,063,795
70 4,063,796
87 4,063,797
99 4,063,798
162 SF 4,063,799
184 4,063,800
216 4,063,801
223 4,063,802
319 4,063,803
320 4,063,804

CLASS 351
6 4,063,805
9 4,063,806
24 4,063,807

CLASS 354
3 4,064,514
23 D 4,064,515
31 4,064,516
51 4,064,517
86 4,064,518
141 4,064,519
196 4,064,520

CLASS 355
3 DR 4,063,809
3 TR 4,063,808
4 4,063,810
15 4,063,811
18 4,063,812
77 4,063,813

CLASS 356
28 4,063,814
29 4,063,815
93 4,063,816
4,063,817
100 4,063,818
152 4,063,819

167 4,063,820
4,063,821
179 4,063,822
197 4,063,823

CLASS 357
2 4,064,521
16 4,064,522
20 4,064,523
24 4,064,524
42 4,064,525
46 4,064,526
48 4,064,527

CLASS 358
22 4,064,528
29 4,064,529
36 4,064,530
44 4,064,531
4,064,532
105 4,064,533
107 4,064,534
113 4,064,535
118 4,064,536
127 4,064,537
128 4,064,538
4,064,539
142 4,064,540
153 4,064,541
245 4,064,542
248 4,064,543

CLASS 360
99 4,064,544
133 4,064,545

CLASS 361
33 4,064,546
172 4,064,547
229 4,064,548
283 4,064,549
4,064,550
399 4,064,551
414 4,064,552

CLASS 362
4 4,064,431
33 4,064,425
34 4,064,428
96 4,064,427
102 4,064,429
226 4,064,426
231 4,064,424
4,064,430
330 4,064,433
457 4,064,432

CLASS 364
107 4,064,394
4,064,395
200 4,064,489
4,064,490
4,064,553
4,064,554
414 4,064,393
465 4,064,555
492 4,064,392
573 4,064,396
709 4,064,398
4,064,399
716 4,064,421
718 4,064,423
724 4,064,397
746 4,064,400
841 4,064,422
900 4,064,556
4,064,557
4,064,558
4,064,559
4,064,560
4,064,561

CLASS 365
19 4,064,496

49 4,064,494
96 4,064,493
103 4,064,495
149 4,064,491
184 4,064,492

CLASS 366
25 Re.29,496
75 4,063,717
4,063,718
100 4,063,716
187 4,063,715

CLASS 401
10 4,063,827
96 4,063,828
101 4,063,829

CLASS 403
3 4,063,830
28 4,063,831
54 4,063,832
60 4,063,833
138 4,063,834
252 4,063,835
263 4,063,836
307 4,063,837
343 4,063,838

CLASS 404
69 4,063,839
4,063,840

CLASS 407
70 4,063,841

CLASS 408
146 4,063,842
4,063,843
204 4,063,844

CLASS 415
134 4,063,845
199.2 4,063,846
200 4,063,847
206 4,063,848
210 4,063,849
214 4,063,850

CLASS 416
97 A 4,063,851
228 4,063,852

CLASS 417
43 4,063,824
53 4,063,853
343 4,063,825
410 4,063,826
552 4,063,854

CLASS 418
84 4,063,855

CLASS 423
120 4,064,217
240 4,064,218
242 4,064,219
321 R 4,064,220
393 4,064,221
4,064,222
522 4,064,223
598 4,064,224
648 R 4,064,225
657 4,064,226

CLASS 424
1 4,064,227
4,064,228
7 4,064,229
19 4,064,230
52 4,064,231
89 4,064,232
118 4,064,233
157 4,064,234
177 4,064,235

4,064,236
200 4,064,237
227 4,064,238
228 4,064,239
241 4,064,240
246 4,064,241
4,064,242
248.5 4,064,243
250 4,064,244
4,064,245
251 4,064,246
258 4,064,247
4,064,248
261 4,064,249
263 4,064,251
266 4,064,252
4,064,253
267 4,064,254
4,064,255
269 4,064,256
270 4,064,257
4,064,258
4,064,259
4,064,260
4,064,261
274 4,064,264
282 4,064,250
285 4,064,262
4,064,263
300 4,064,265
304 4,064,266
4,064,267
308 4,064,268
4,064,269
324 4,064,270
330 4,064,271
4,064,272
340 4,064,273

CLASS 425
5 4,063,856
63 4,063,857
81 4,063,858
139 4,063,859
202 4,063,860
392 4,063,862
425 4,063,863
433 4,063,864
467 4,063,865
517 4,063,866
526 4,063,867
533 4,063,868
542 4,063,861
574 4,063,869

CLASS 426
3 4,064,274
53 4,064,275
69 4,064,276
331 4,064,277
535 4,064,278
4,064,279
4,064,280
538 4,064,281
559 4,064,282
583 4,064,283
626 4,064,284

CLASS 427
24 4,064,285
44 4,064,286
53 4,064,287
58 4,064,288
82 4,064,289
97 4,064,290
106 4,064,291
132 4,064,292
236 4,064,293
373 4,064,294
424 4,064,295

CLASS 428
35 4,064,296

86 4,064,297
95 4,064,298
102 4,064,299
120 4,064,300
151 4,064,301
152 4,064,302
201 4,064,303
207 4,064,304
246 4,064,305
255 4,064,306
310 4,064,307
410 4,064,308
413 4,064,309
427 4,064,310
434 4,064,311
447 4,064,312
4,064,313
483 4,064,314
518 4,064,315
522 4,064,316
537 4,064,317
543 4,064,318
602 4,064,319
632 4,064,320

CLASS 429
34 4,064,321
41 4,064,322
86 4,064,323
101 4,064,324
104 4,064,325
111 4,064,326
112 4,064,327
121 4,064,328
174 4,064,329
218 4,064,330
221 4,064,331
223 4,064,332

CLASS 431
75 4,063,870
89 4,063,871
285 4,063,872
328 4,063,873
350 4,063,874

CLASS 432
106 4,063,875
222 4,063,876

CLASS 526
77 4,064,333
119 4,064,334
128 4,064,335
172 4,064,336
204 4,064,337
230 4,064,338
320 4,064,161

CLASS 536
17 4,064,339
4,064,340
4,064,341
59 4,064,342

CLASS 544
16 4,064,343
21 4,064,344
26 4,064,122
27 4,064,345
30 4,064,346
79 4,064,347
137 4,064,348
142 4,064,123

CLASS 548
344 4,064,138

CLASS 560
53 4,064,160
56 4,064,349
121 4,064,350
4,064,351
234 4,064,162

CLASSIFICATION OF DESIGNS

D2—	260	246,681		316	246,692	D11—	79	246,703	D15—	8	246,714		165	246,725			246,737
D6—	7	246,682		319	246,694		87	246,704		19	246,715	D24—	31	246,726		15 AJ	246,735
	45	246,683			246,695	D12—	22	246,705		29	246,716		36	246,727		15 B	246,738
	63	246,684		320	246,693		155	246,706	D16—	6	246,717		38	246,728		15 D	246,740
	73	246,685		350	246,696		184	246,708		65	246,718		49	246,729		15 LL	246,739
D7—	94	246,686		499	246,697		196	246,707			246,719	D28—	13	246,730	D48—	16 A	246,741
	107	246,687	D9—	284	246,698	D13—	11	246,709			246,720		50	246,731		16 R	246,742
D8—	88	246,688	D10—	65	246,699	D14—	33	246,710			246,721	D34—	5 DT	246,733	D52—	2 C	246,744
	307	246,689		106	246,700		40	246,711	D19—	41	246,722		5 GC	246,734			
		246,690			246,701		68	246,712		49	246,723		5 SS	246,732		4 R	246,745
	310	246,691		107	246,702		77	246,713	D23—	4	246,724		15 AF	246,736	D87—	1 R	246,743

CLASSIFICATION OF PLANTS

P.—	8	4,168		14	4,167		34	4,166

GEOGRAPHICAL INDEX
OF RESIDENCE OF INVENTORS

(U.S. States, Territories and Armed Forces, the Commonwealth of Puerto Rico, and the Canal Zone)

Alabama 1
Alaska 2
American Samoa 3
Arizona 4
Arkansas 5
California 6
Canal Zone 7
Colorado 8
Connecticut 9
Delaware 10
District of Columbia 11
Florida 12
Georgia 13
Guam 14
Hawaii 15
Idaho 16
Illinois 17
Indiana 18
Iowa 19
Kansas 20
Kentucky 21
Louisiana 22
Maine 23
Maryland 24
Massachusetts 25
Michigan 26
Minnesota 27
Mississippi 28
Missouri 29
Montana 30
Nebraska 31
Nevada 32
New Hampshire 33
New Jersey 34
New Mexico 35
New York 36
North Carolina 37
North Dakota 38
Ohio 39
Oklahoma 40
Oregon 41
Pennsylvania 42
Puerto Rico 43
Rhode Island 44
South Carolina 45
South Dakota 46
Tennessee 47
Texas 48
Utah 49
Vermont 50
Virginia 51
Virgin Islands 52
Washington 53
West Virginia 54
Wisconsin 55
Wyoming 56
U.S. Air Force 57
U.S. Army 58
U.S. Navy 59

(First number in listing denotes location according to above key. Refer to patent number in body of the Official Gazette to obtain details as to inventor name, location, etc.)

PATENTS

1 : 4,063,345
4,063,415
4,063,556
4,063,685
4,064,086
4,064,225
4,064,275
4 : 4,063,349
4,063,475
4,063,673
4,063,726
4,063,791
4,064,523
5 : 4,063,607
6 : 4,063,323
4,063,351
4,063,368
4,063,387
4,063,393
4,063,395
4,063,402
4,063,409
4,063,419
4,063,441
4,063,449
4,063,459
4,063,477
4,063,485
4,063,509
4,063,538
4,063,543
4,063,550
4,063,551
4,063,553
4,063,561
4,063,604
4,063,606
4,063,608
4,063,626
4,063,628
4,063,629
4,063,641
4,063,647
4,063,648
4,063,652
4,063,670
4,063,678
4,063,714
4,063,731
4,063,739
4,063,740
4,063,747
4,063,749

4,063,753
4,063,759
4,063,761
4,063,803
4,063,804
4,063,806
4,063,819
4,063,874
4,063,888
4,063,893
4,063,895
4,063,928
4,063,961
4,063,962
4,063,974
4,063,992
4,063,993
4,064,018
4,064,025
4,064,036
4,064,048
4,064,049
4,064,054
4,064,070
4,064,071
4,064,135
4,064,141
4,064,152
6 : 4,064,167
4,064,185
4,064,203
4,064,204
4,064,228
4,064,229
4,064,240
4,064,257
4,064,258
4,064,259
4,064,283
4,064,287
4,064,290
4,064,352
4,064,359
4,064,360
4,064,363
4,064,364
4,064,371
4,064,387
4,064,390
4,064,423
4,064,426
4,064,432
4,064,445
4,064,448

4,064,450
4,064,456
4,064,471
4,064,472
4,064,496
4,064,499
4,064,502
4,064,503
4,064,512
4,064,516
4,064,527
4,064,535
4,064,544
4,064,549
4,064,550
4,064,561
8 : 4,063,533
4,063,681
4,063,808
4,064,217
4,064,327
9 : 4,063,367
4,063,378
4,063,379
4,063,576
4,063,659
4,063,727
4,063,733
4,063,775
4,063,809
4,063,851
4,063,852
4,063,903
4,063,994
4,064,000
4,064,001
4,064,081
4,064,100
4,064,143
4,064,191
4,064,202
4,064,205
4,064,207
4,064,264
4,064,272
4,064,294
4,064,302
4,064,322
4,064,333
4,064,373
4,064,394
4,064,530
4,064,560

08 : 4,063,744
10 : 4,063,341
4,063,360
4,063,558
4,063,713
4,063,717
4,063,824
4,063,880
4,063,882
4,063,889
4,063,923
4,064,058
4,064,075
4,064,077
4,064,104
4,064,171
4,064,213
4,064,214
4,064,260
4,064,303
4,064,310
11 : 4,064,023
12 : 4,063,318
4,063,512
4,063,552
4,063,590
4,063,595
4,063,612
4,063,679
4,064,019
4,064,046
4,064,074
4,064,079
4,064,117
4,064,424
4,064,427
4,064,493
13 : 4,063,396
4,063,518
4,063,771
4,063,780
4,063,917
4,064,316
16 : 4,063,712
17 : 4,063,319
4,063,334
4,063,336
4,063,339
4,063,340
4,063,342
4,063,352
4,063,361
4,063,364

4,063,369
4,063,373
4,063,384
4,063,391
4,063,401
4,063,443
4,063,464
4,063,474
4,063,481
4,063,498
4,063,499
4,063,559
4,063,564
4,063,616
4,063,624
4,063,639
4,063,658
4,063,660
4,063,665
4,063,667
4,063,668
4,063,700
4,063,766
4,063,769
4,063,774
4,063,788
4,063,848
4,063,905
4,063,924
4,063,960
4,063,985
4,063,986
4,064,029
4,064,038
4,064,045
4,064,065
4,064,105
4,064,150
4,064,177
4,064,318
4,064,350
4,064,370
4,064,377
4,064,404
4,064,449
4,064,462
4,064,488
4,064,497
4,064,513
18 : 4,063,377
4,063,436
4,063,466
4,063,470

4,063,484
4,063,573
4,063,615
4,063,618
4,063,683
4,063,764
4,063,840
4,063,845
4,063,918
4,064,009
4,064,101
4,064,113
4,064,127
4,064,233
4,064,254
4,064,261
4,064,343
19 : 4,063,359
4,063,366
4,063,489
4,063,654
4,063,748
4,064,336
20 : 4,063,365
4,063,541
4,064,455
4,064,528
21 : 4,063,619
4,063,630
4,063,742
4,063,798
4,064,301
22 : 4,063,374
4,063,602
4,063,605
4,063,849
4,063,854
4,063,885
4,064,293
24 : 4,063,385
4,064,379
4,064,405
4,064,435
4,064,442
4,064,464
4,064,501
4,064,533
25 : 4,063,322
4,063,347
4,063,371
4,063,372
4,063,472
4,063,527

4,063,544
4,063,545
4,063,634
4,063,645
4,063,682
4,063,692
4,063,799
4,063,860
4,063,872
4,063,919
4,064,053
4,064,091
4,064,093
4,064,116
4,064,288
4,064,308
4,064,353
4,064,354
4,064,357
4,064,368
4,064,392
4,064,407
4,064,476
4,064,511
4,064,518
4,064,519
4,064,547
4,064,556
26 : 4,063,333
4,063,358
4,063,392
4,063,455
4,063,467
4,063,490
4,063,496
4,063,548
4,063,581
4,063,605
4,063,611
4,063,623
4,063,778
4,063,783
4,063,785
4,063,841
4,063,939
4,063,969
4,064,024
4,064,027
4,064,034
4,064,155
4,064,160
4,064,187
4,064,210
4,064,248
4,064,340
4,064,341
4,064,348
4,064,382
4,064,388
4,064,413
27 : 4,063,324
4,063,331
4,063,412
4,063,452
4,063,453
4,063,508
4,063,663
4,063,765
4,063,878
4,064,138
4,064,282
4,064,314
4,064,542
4,064,545
28 : 4,063,920
4,064,447
29 : 4,063,321
4,063,657
4,063,684
4,063,750

4,063,773
4,063,876
4,063,922
4,064,044
4,064,227
4,064,429
4,064,433
31 : 4,063,389
4,063,410
4,063,569
33 : 4,063,492
4,064,356
34 : 4,063,313
4,063,317
4,063,348
4,063,353
4,063,400
4,063,420
4,063,473
4,063,513
4,063,514
4,063,580
4,063,617
4,063,646
4,063,671
4,063,674
4,063,756
4,063,820
4,063,823
4,063,829
4,063,837
4,063,887
4,063,890
4,063,989
4,063,995
4,064,013
4,064,026
4,064,037
4,064,040
4,064,043
4,064,062
4,064,064
4,064,067
4,064,076
4,064,082
4,064,102
4,064,106
4,064,107
4,064,120
4,064,123
4,064,125
4,064,144
4,064,162
4,064,183
4,064,184
4,064,189
4,064,236
4,064,237
4,064,239
4,064,246
4,064,251
4,064,273
4,064,278
4,064,279
4,064,280
4,064,281
4,064,324
4,064,338
4,064,344
4,064,361
4,064,389
4,064,418
4,064,428
4,064,457
4,064,458
4,064,463
4,064,477
4,064,522
4,064,529
4,064,541

4,064,552
35 : 4,063,594
4,064,409
36 : 4,063,335
4,063,337
4,063,380
4,063,406
4,063,413
4,063,457
4,063,478
4,063,515
4,063,530
4,063,549
4,063,557
4,063,562
4,063,587
4,063,600
4,063,631
4,063,637
4,063,644
4,063,666
4,063,669
4,063,704
4,063,716
4,063,730
4,063,768
4,063,810
4,063,836
4,063,853
4,063,884
4,063,907
4,063,913
4,063,932
4,063,943
4,063,945
4,063,947
4,063,956
4,063,964
4,063,965
4,063,966
4,063,991
4,064,006
4,064,010
4,064,012
4,064,014
4,064,039
4,064,059
4,064,129
4,064,134
4,064,151
4,064,156
4,064,158
4,064,168
4,064,175
4,064,179
4,064,230
4,064,274
4,064,285
4,064,313
4,064,315
4,064,345
4,064,372
4,064,386
4,064,412
4,064,415
4,064,417
4,064,419
4,064,422
4,064,436
4,064,439
4,064,453
4,064,474
4,064,490
4,064,495
4,064,506
4,064,508
4,064,509
4,064,514
4,064,558
37 : 4,063,330

4,063,494
4,063,565
4,063,633
4,063,661
4,063,696
4,063,770
4,064,271
4,064,410
4,064,548
38 : 4,063,745
4,063,832
39 : 4,063,332
4,063,398
4,063,403
4,063,442
4,063,450
4,063,454
4,063,471
4,063,493
4,063,520
4,063,574
4,063,627
4,063,705
4,063,708
4,063,729
4,063,738
4,063,754
4,063,760
4,063,786
4,063,790
4,063,805
4,063,833
4,063,839
4,063,898
4,063,902
4,063,927
4,063,930
4,063,978
4,063,979
4,063,983
4,064,083
4,064,092
4,064,094
4,064,095
4,064,109
4,064,178
4,064,194
4,064,297
4,064,330
4,064,335
4,064,347
4,064,355
4,064,369
4,064,380
4,064,395
4,064,431
4,064,451
4,064,452
4,064,469
4,064,492
4,064,500
40 : 4,063,388
4,063,416
4,063,497
4,063,502
4,063,521
4,063,593
4,063,613
4,063,772
4,063,846
4,064,084
4,064,114
4,064,115
4,064,190
4,064,337
4,064,481
41 : 4,063,511
4,063,554
4,063,719

4,063,725
4,063,904
4,063,954
4,064,362
42 : 4,063,325
4,063,338
4,063,346
4,063,355
4,063,405
4,063,417
4,063,418
4,063,440
4,063,444
4,063,517
4,063,532
4,063,547
4,063,620
4,063,662
4,063,675
4,063,677
4,063,686
4,063,691
4,063,707
4,063,734
4,063,743
4,063,794
4,063,842
4,063,843
4,063,844
4,063,855
4,063,856
4,063,911
4,063,912
4,063,915
4,063,929
4,063,955
4,063,996
4,063,999
4,064,002
4,064,003
4,064,015
4,064,042
4,064,050
4,064,068
4,064,072
4,064,087
4,064,089
4,064,139
4,064,161
4,064,163
4,064,165
4,064,180
4,064,197
4,064,222
4,064,242
4,064,286
4,064,331
4,064,381
4,064,383
4,064,396
4,064,421
4,064,465
4,064,486
4,064,487
4,064,498
4,064,507
4,064,521
4,064,534
44 : 4,063,506
4,063,793
45 : 4,063,326
4,063,664
4,063,886
4,063,988
4,064,296
4,064,367
47 : 4,063,597
4,063,640
4,063,735

4,063,896
4,064,061
48 : Re.29,499
4,063,344
4,063,375
4,063,404
4,063,421
4,063,427
4,063,431
4,063,447
4,063,448
4,063,592
4,063,601
4,063,650
4,063,706
4,063,752
4,063,767
4,063,838
4,064,055
4,064,056
4,064,145
4,064,157
4,064,170
4,064,182
4,064,312
4,064,328
4,064,408
4,064,430
4,064,479
4,064,554
4,064,555
4,064,557
49 : 4,063,429
4,063,787
4,064,414
4,064,438
50 : 4,063,486
51 : 4,063,434
4,063,435
4,063,480
4,063,571
4,063,701
4,063,732
4,063,814
4,063,821
4,063,830
4,063,963
4,063,981
4,064,298
4,064,401
4,064,440
53 : 4,063,315
4,063,577
4,063,609
4,063,610
4,063,632
4,063,728
4,063,762
4,063,980
4,064,004
4,064,020
4,064,166
4,064,299
4,064,365
4,064,485
54 : 4,064,186
4,064,195
55 : 4,063,531
4,063,570
4,063,655
4,063,656
4,063,715
4,063,859
4,063,863
4,063,944
4,064,052
4,064,142
4,064,323
4,064,475

DESIGN PATENTS

5 : 246,683
6 : 246,681
246,700
246,701
246,710
246,722
246,726
246,727
246,729

8 : 246,706
9 : 246,720
246,721
12 : 246,688
246,702
246,728
13 : 246,703
246,715

17 : 246,686
246,689
246,690
246,694
246,695
246,696
246,709
246,713

246,736
246,737
20 : 246,712
22 : 246,732
246,733
26 : 246,685
27 : 246,711
29 : 246,741

34 : 246,704
246,705
246,730
36 : 246,714
246,724
246,739
246,745
41 : 246,699

42 : 246,740
47 : 246,698
53 : 246,725
55 : 246,684
246,692
246,693
246,697
56 : 246,743

PLANT PATENTS

6 : 4,167
24 : 4,168
53 : 4,166

U. S. GOVERNMENT PRINTING OFFICE : O - 1977

CHANGE OF ADDRESS FORM

NAME—FIRST, LAST

COMPANY NAME OR ADDITIONAL ADDRESS LINE

STREET ADDRESS

CITY | STATE | ZIP CODE

PLEASE PRINT OR TYPE

(or) COUNTRY

Mail this form to: NEW ADDRESS

Superintendent of Documents
Government Printing Office SSOM
Washington, D.C. 20402

Attach last subscription label here.

SUBSCRIPTION ORDER FORM

SUBSCRIPTION ORDER FORM

ENTER MY SUBSCRIPTION TO:

@ $ Domestic; @ $ Foreign.

NAME—FIRST, LAST

COMPANY NAME OR ADDITIONAL ADDRESS LINE

STREET ADDRESS

CITY | STATE | ZIP CODE

PLEASE PRINT OR TYPE

(or) COUNTRY

☐ Remittance Enclosed (Make checks payable to Superintendent of Documents)

☐ Charge to my Deposit Account No. ....

MAIL ORDER FORM TO:
Superintendent of Documents
Government Printing Office
Washington, D.C. 20402

OFFICIAL GAZETTE of the UNITED STATES PATENT and TRADEMARK OFFICE

December 27, 1977 — Volume 965 — Number 4

CONTENTS

The following are mailed under direction of the Superintendent of Documents, Government Printing Office, Washington, D.C., 20402, to whom all subscriptions should be made payable and all communications addressed:

THE OFFICIAL GAZETTE (PATENTS SECTION), issued weekly, subscription $342.20 per annum for first class mailing. also available as fourth-class mail at $250.00; foreign mailing $85.55 additional; single copies $6.60 each.

THE OFFICIAL GAZETTE (TRADEMARK SECTION), issued weekly, subscription $88.40 per annum, foreign mailing $22.10 additional; single copies $1.70 each.

CIRCULARS OF GENERAL INFORMATION concerning PATENTS, price 60 cents each.

CIRCULARS OF GENERAL INFORMATION concerning TRADEMARKS, price 50 cents each.

PRINTED COPIES OF PATENTS are furnished by the Patent and Trademark Office at 50 cents each; PLANT PATENTS in color, $1.00 each; copies of TRADEMARKS AND DESIGN PATENTS at 20 cents each. Address orders to the Commissioner of Patents and Trademarks, Washington, D.C., 20231.

Printing authorized by Section 11(a)3 of Title 35, U.S. Code P.T.O.

PATENT AND TRADEMARK OFFICE NOTICES

Board of Appeals Decisions Rendered in the Month of November 1977

Affirmed	175
Affirmed in Part	33
Reversed	71
Total	279

National Inventors Day

The Sixth Annual Inventors Day Exposition will be held on Saturday and Sunday, February 11 and 12, 1978 at the Patent and Trademark Office in Arlington, Virginia.

Limited space is available for appropriate display and demonstration of patented materials, devices or methods. Such limited space dictates early consideration by perspective participants. No application can be considered after January 20, 1978.

Other than electricity and allotted space—floor, wall or table top, all expenses must be borne by the exhibitor. Arrangements for delivery, return, set up and take down, as well as individual exhibits and personnel are the exhibitor's responsibility. Neither the Patent and Trademark Office nor individual employees can accept a collect shipment or provide storage.

The Patent and Trademark Office National Inventors Day Committee will select the items to be exhibited and allot available space. Suitability for dynamic demonstration and current public interest are prime consideration in selecting exhibits.

Inventors or firms interested in participating are encouraged to contact the National Inventors Day Committee (phone: 557-3428). Communications should be directed to: Commissioner of Patents and Trademarks, Washington, D.C. 20231, Attn: Oscar Mastin, Office of Information Services.

JOSEPH PETERS,
Chairman.

Dec. 7, 1977

National Inventors Day

The Patent and Trademark Office will be sponsoring National Inventors Day in the Public Search Room on Saturday, February 11, from 1:00 p.m. to 5:00 p.m. and Sunday February 12, 1978 from 10:00 a.m. to 5:00 p.m. The public is invited to view the exhibits on these days and to attend a formal program at 2:00 p.m. on Sunday.

In order to accommodate the exhibits, it will be necessary to close the Public Search Room at 5:00 p.m. on Friday, February 10, 1978.

We would appreciate the cooperation of all users of the Search Room facilities in removing all personal items and belongings in order to permit the early closing time.

LUTRELLE F. PARKER,
Acting Commissioner of Patents and Trademarks.

Dec. 7, 1977

Registration to Practice

The following are names of persons applying for registration to practice before the United States Patent and Trademark Office. Information tending to affect the eligibility of said applicants on moral, ethical, or other grounds, should be furnished the Commissioner of Patents and Trademarks on or before January 20, 1978.

LUTRELLE F. PARKER,
Acting Commissioner of Patents and Trademarks and Chairman, Committee on Enrollment.

11/28/77.

A

Abrams, Steven R., 83–40 Austin St., Kew Gardens, N.Y. 11415
Ahmed, Zaheer U., 66—92 Selfridge St., #2G, Forest Hills, N.Y. 11375
Akers, Lawrence C., 157—26 Quince Ave., Flushing, N.Y. 11355
Akorli, Godfried R., 23230 Walden Glen Circle, Cincinnati, Ohio 45231
Alter, Mitchell E., 170 Hunter Ave., North Tarrytown, N.Y. 10591
Augustin, Raymond W., 800 Penn Center Blvd., #305, Pittsburgh, Pa. 15235
Austin, Ormand R., 7 Middlebrook, St. Louis, Mo. 63141

B

Barnhardt, John J., III, 2529 Sherwood Ave., Charlotte, N.C. 28207
Barth, Carl O., 4771 McKinley Dr., Boulder, Colo. 80303
Beiser, Robert S., 3 Jefferson Ct., Fairport, N.Y. 14450
Bekelnitzky, Seymour G., 147—09 72nd Dr., Flushing, N.Y. 11367
Belsheim, Stephen T., P.O. Box 15173, Fort Wayne, Ind. 46802
Berthold, Thomas R., 1178 Carnot Dr., San Jose, Calif. 95126
Blacker, Stanley M., 3823 Cobblestone Ct., Alexandria, Va. 22306
Bliss, Ronald G., 10910 Archmont, Houston, Tex. 77070
Boclanowski, Michael W., 33006 28th Ave., SW., Federal Way, Wash. 98003
Bohatch, Collette K., 1566 33rd St., NW., Washington, D.C. 20007
Bollo, Paul L., 70 Standish Dr., Ridgefield, Conn. 06877
Brosius, Edward J., 15426 S. Tulip Ct., Orland Park, Ill. 60462
Brown, Marc E., 2212 I St., NW., #703, Washington, D.C. 20037
Brown, Steven P., 6701 DeSoto, #121, Canoga Park, Calif. 91303
Bunch, John W., 3428 Daniels Ave., #4, Dallas, Tex. 75205
Burge, Harland L., Jr., 13331 Shapell St., Garden Grove, Calif. 92643

C

Caccuro, John A., 1514 Long Beach Ave., Lakewood, N.J. 08701
Campbell, Frank A., P.O. Box 25, Pacific Palisades, Calif. 90272
Christensen, Carl A., P.O. Box 148, Dannebrog, Nebr. 68831
Cicotte, Lynn J., 26447 Basswood, Rancho Palos Verdes, Calif. 90274
Claussen, John H., 1500 Grenoside Ave., Schenectady, N.Y. 12309
Coburn, Patricia A., 10331 Beau Jardin, #7, Creve Coeur, Mo. 63141
Coughlin, Terrance J., 112 N. 12th Ave., Melrose Park, Ill. 60160
Crist, Edward C., 8296 Wright Rd., Broadview Heights, Ohio 44147
Cushing, David J., 11507 Purple Beech Dr., Reston, Va. 22091

D

Daigle, Claud A., Jr., 3069 S. Woodrow St., Arlington, Va. 22206
Dautremont, James H., 80 Mall Dr., North Plainfield, N.J. 07062
De La Garza, Charles H., 3030 Kevin, Houston, Tex. 77058
DeGirolamo, Joseph A., 2411 Ave. M., Brooklyn, N.Y. 11210
Delroy, Stephen M., 2986 Ave. V., Brooklyn, N.Y. 11229
DiPietro, Mark J., 141 Coral Ave., Portage, Ind. 46368
Doktycz, Charles A., 1023 N. Kenilworth Blvd., Oak Park, Ill. 60302
Drexler, Margaret A. B., 804 Colquitt St., Houston, Tex. 77006
Dryer, Mark, 24 Royal Oak Dr., Huntington, N.Y. 11743

E

Edminister, Joseph A., 2721 Susan Lane, Cuyahoga Falls, Ohio 44223
Elderkin, Dianne B., 8641 Greenbelt Rd., #201, Greenbelt, Md. 20770
Elkind, Michael S., 10767 Woodbine St., #324, Los Angeles, Calif. 90034
Engellenner, Thomas J., 10 Holyoke St., Boston, Mass. 02116
Evans, Susan B., 5304 Cedar Ave., Philadelphia, Pa. 14143

F

Farrell, Daniel R., 1714C N. Oak Knoll Dr., Anaheim, Calif. 92807
Fehrman, David L., 5240 W. Bancroft, #6, Toledo, Ohio 43615
Felt, Irving N., 405 W21 Ct., New York, N.Y. 10011
Ferguson, Richard, 2701 Briarcliff Pl., Charlotte, N.C. 28207
Fidler, Roger L., 405 Wildwood Ave., Columbia, S.C. 29203
Finkel, Andra Marie, 2154 Sunset Crest, Los Angeles, Calif. 90046

Finnie, John, 152 Little Neck Rd., Centerport, N.Y. 11721
Fiore, Anthony N., Jr., 25305 N. 4 Country Club Blvd., North Olmsted, Ohio 44070
Fiaccavento, Frank J., 148 Dafrack Dr., Lake Hiawatha, N.J. 07034
Franks, Robert A., 1602 Heather Dr. La Verne, Calif. 91750
Franz, Warren L., 130 Albemarke Dr., Penllyn, Pa. 19422

G

Ganiaris, Neophytos, 3671 Hudson Manor Terr., Bronx, N.Y. 10463
Garrett, Robert M., 12 Buckeye, Ferguson, Mo. 63135
Garvey, John C., 1900 S. Eads St., #1127, Arlington, Va. 22202
Gehring, Marshall F., 49 Glacier Key, Bellevue, Wash. 98006
Geil, Norman H., 180 Poplar St., #3, Rochester, N.Y. 14620
Gerasimow, Alexander M., 181 Hampshire St., Indian Orchard, Mass. 01151
Gleason, Monte L., 280 E. Highline Cir., #102, Littleton, Colo. 80122
Ginsburg, Paul H., 5017 17th Ave., Brooklyn, N.Y. 11204
Glick, Kenneth R., 479 Myrtle Ave., Albany, N.Y. 12208
Goodman, Edward W., 25 Clifton Ave., #D1014, Newark, N.J. 07104

H

Haggard, Alan H., 3406 Garfield Blvd., Lorain, Ohio 44052
Hammond, Herbert J., 6041 Village Bend Dr., #2106, Dallas, Tex. 75206
Hanley, Walter E., Jr., 1641—24 3rd Ave., New York, N.Y. 10028
Harris, Earl Douglas, 2186 Macon Rd., Athens, Ga. 30601
Harris, Gordon K., Jr., 6066 Clintonview St., Columbus, Ohio. 43220
Hartman, Robin A., 4406 Memorial, #1063, Houston, Tex. 77007
Hasak, Janet E., 270 Baldwin Rd., #F–9, Parsippany, N.J. 07054
Honig, Milton L., 3240 Henry Hudson Pkwy., Bronx, N.Y. 10463
Hummel, Robert J., 2224 Maynard Ave., Utica, N.Y. 13502
Hummer, John L., 12384 Copenhagen Ct., Reston, Va. 22091

I

Ikeda, Tatsuya, 47 Princeton St., #3–125, Leominster, Mass. 01453
Irving, Thomas L., 2008 N. 21st St., Arlington, Va. 22201

J

James, John L., 2721 Rustic Ridge, Peoria, Ill. 61604
Janel, David F., 2213 N. Van Dorn St., #103, Alexandria, Va. 22304
Jerome, Frederick S., P.O. Box 812, Wheaton, Ill. 60187

K

Kaliski, Edward J., Box 3661, Greenville, Del. 19807
Kanady, Mary J., 6040 Sheridan Rd., #204, Chicago, Ill. 60660
Kashman, David S., 143—36 Barclay Ave., Flushing, N.Y. 11355
Kautz, Thomas L., 2810 Cumberland Dr., #3A, Valparaiso, Ind. 46383
Kelley, Paul S., 262 DeGraw St., Brooklyn, N.Y. 11231
Kennedy, Alan J., 9700 Gasket Ring Rd., Columbia, Md. 21045
Kent, Robert A., 2521 NW. 116th St., Oklahoma City, Okla. 73120
Keukelaar, Carol L., R.D. #3, 92 Oakwood Dr., New Fairfield, Conn. 06810
Kinney, Layton F., 1050 W. Dickens, Chicago, Ill. 60620
Kiteck, Michael E., Jr., 1825 E. 3rd St., St. Paul, Minn. 55119
Klein, Howard J., 1040 Cabrillo Park Dr., #21–B, Santa Ana, Calif. 92701
Kleinstein, Bruce H., 1500 Locust St., Philadelphia, Pa. 19102
Kotow, Nickolas C., 265 W. Kanawha Ave., Columbus, Ohio 43214
Kovitz, Beth, 14 Koster Blvd., #4A, Edison, N.J. 08817
Krefman, Stephen D., 654 Hill N Dale, Lexington, Ky. 40503
Kressin, Geoffrey D., 425 Russfield Dr., Knoxville, Tenn. 37922
Krieger, Stuart E., 63 E. 9th St., #3P, New York, N.Y. 10003

L

LaBarre, James A., 2000 S. Eads St., #226, Arlington, Va. 22202
Lauterbach, Richard T., 632 S. 10th Ave., LaGrange, Ill. 60525
Lawton, William R., 6651 Jewet-Holmwood Rd., Orchard Park, N.Y. 14127
Ledbetter, James E., 4858 W. Braddock Rd., #10, Alexandria, Va. 22311
Leggett, James F., 2025 One Wash. Plaza, Tacoma, Wash. 98402
Levesque, Charles R., 1517 Briarwood Circle, Cuyahoga Falls, Ohio 44221
Levin, Gary H., 1356 N. 75th St., Philadelphia, Pa. 19151
Lewis, Donald G., 274 Maynard Ave., Newbury Park, Calif. 91320
Lewis, J. Gordon, 1095 Trevino Dr., Troy, Mich. 48098
Lipsitz, Barry R., 44 Purdy Rd., East Norwalk, Conn. 06850
Loberman, Harry, 876 Occidental Dr., Claremont, Calif. 91711
Lovercheck, Dale R., 2319 S. Shore Dr., Erie, Pa. 16505

M

MacCord, Howard A., Jr., 11109 Cavalier Ct., #7–L, Fairfax, Va. 22030
Marsh, William F., 3304 Chauncy St., Bethlehem, Pa. 18017
Martin, Timothy J., 819 Lafayette, Denver, Colo. 80218
McDonald, Frank B., 3120 Naamans Rd., R–9, Wilmington, Del. 19810
McIlwain, Russell L., 1830 Middleton, Lisle, Ill. 60532
McManus, James M., Craig Rd., Old Lyme, Conn. 06371
Meltzer, Mark J., 70 Ellsworth St., San Francisco, Calif. 94110
Michalos, Peter C. 2070 Jones Rd., Fort Lee, N.J. 07024
Miesle, Terrence E., 1836 Larchwood Pl., Cincinnati, Ohio 45237
Mitchard, Leonard C., P.O. Box 40574, Washington, D.C. 20016
Mooney, William D., 24451 Lakeshore Blvd., #1721, Euclid, Ohio 44123
Moore, Annette M., 2310 California St., #3, Mountain View, Calif. 94040
Moravan, Gregory W., 24708 SE 14th, Issaquah, Wash. 98027
Morse, Robert H., 303 W. 66th St., New York, N.Y. 10023
Murray, David D., 3635 Lincolnshire Woods Ct., Toledo, Ohio 43606
Myers, Donald D., 8054 Audrain Dr., St. Louis, Mo. 63121

N

Nobozny, Ronald M., 14430 Park, Oak Park, Mich. 48237
Negin, Richard A., 2469 St. Francis, Akron, Ohio 44313
Nelson, Albin J., 42 Melrose Ave., Croton-on-Hudson, N.Y. 10520
Nydegger, Rick D., 2754 E. Carde Dr., Salt Lake City, Utah 84121

O

Oaks, Arthur E., 601 Fariston Dr., Wynnewood, Pa. 19096
Odozynski, John A., 1790 Jamison Rd., East Aurora, N.Y. 14052
Olson, Richard B., 342 Logan Rd., Bethel Park, Pa. 15102
Ove, James W., Jr., 3760 Glendenning, Downers Grove, Ill. 60515

P

Parmerter, Stanley M., 1209 Howard Circle, Wheaton, Ill. 60187
Parris, Joe P., 27102 Cherokee, Magnolia, Tex. 77355
Pearse, Janis E., 201 N. Maple, Mount Prospect, Ill. 60056
Petre, Craig L., 1162 Hollywood Ave., Cincinnati, Ohio 45224
Pinkerton, John P., 4041 Hanover, Dallas, Tex. 75225
Pitruzzella, Vincenzo D., 2257 W. Valley Blvd., #4–104, Pomona, Calif. 91768
Platt, Robert C., 321 E. 48th St., #8J, New York, N.Y. 10017
Pritchard, Kenneth G., 608–A Nimitz Ave., China Lake, Calif. 93555
Protigal, Stanley N., Box 714, South Royalton, Vt. 05068
Puls, Louis G., Jr., 1453 Marshall Rd., Boulder, Colo. 80303
Pursel, David G., 28820 19th Ave., South Federal Way, Wash. 98003

Q

Quinn, James F., 1266 Fairfax Ave., North Tonawanda, N.Y. 14120

R

Radding, Rory J., 16 Leewood Circle, Eastchester, N.Y. 10709
Rakoczy, Richard E., 4813 S. Lawler, Chicago, Ill. 60638
Reeves, Charles R., 3456 Rutledge Dr., Indianapolis, Ind. 46208
Regen, Mark J., 280 Atlantic Ave., East Rockaway, N.Y. 11518
Richmond, Allen W., 107 Pleasantview Ct., Bartlesville, Okla. 74004
Ristas, Lombro J., 100 Long Hill Rd., Windsor, Conn. 06905
Rohm, Benita J., 1165 Rt. 22, #66, North Plainfield, N.J. 07060
Romano, Malcolm J., 116 S. Citrus, Los Angeles, Calif. 99936
Rosenberg, Sumner C., 1703 Little Joe Ct., Decatur, Ga. 30033
Ryndak, James D., 582 Sheridan Sq., Evanston, Ill. 60202

S

Sanchelima, Jesus, 6231 NW. 40th St., Miami, Fla. 33166
Saxe, Bernhard D., 4414 San Marcos Ct., Fairfax, Va. 22030
Schultz, Ira J., 725 Broad Ave., #A2, Ridgefield, N.J. 07657
Seitzman, Markell, 3400 Winterberry, Orchard Lake, Mich. 48033
Sensny, John S., 4763 Norstar Blvd., #2–112, Liverpool, N.Y. 13088
Siebert, J. Suzanne, 2316 Eunice, Berkeley, Calif. 94708
Sieckmann, Gordon F., 7419 Paiute Rd., Louisville, Ky. 40214
Simkin, Jacob, 4821 Ridge Ave., Philadelphia, Pa. 19129
Simmons, Edlyn S., 7631 Sagamore Dr., Cincinnati, Ohio 45236
Sjaastad, Gerald D., 1210 Northfield Rd., Colorado Springs, Colo. 80919
Sluzas, Alex R., 303 Barrington Pl., Lansdale, Pa. 19446
Smith, Judith G., 1821 W. Friendly Ave., Greensboro, N.C. 27403
Smith, Ronald E., 1353 Overlea Dr., Dunedin, Fla. 33528
Starr, Mark T., 8 Kent Pl., Paoli, Pa. 19301
Stenzel, Dennis E., 1410 NE. Schuyler, #35, Portland, Oreg. 97212
Stobbs, Gregory A., 145 E. Cassily, #1–W, Springfield, Ohio 45504

Stone, Raymond E., Jr., 27 Cambridge St., Elmwood, Conn. 06110
Strunck, Stephen S., 411 Old Clairton Rd., Pittsburgh, Pa. 15236
Stumpfe, Walter L., Jr., 8255 Maywood Dr., Cincinnati, Ohio 45241
Swanson, John A., 2149 Hartrey Ave., Evanston, Ill. 60201
Szerkeres, Gabor L., 16314 Mt. Nimgus, Fountain Valley, Calif. 92708

T

Taylor, John E., III, 1557 W. Maple Ave., Langhorne, Pa. 19047
Tobin, Thomas W., 1155 Warburton, #10L, Yonkers, N.Y. 10701

W

Walkowski, Joseph A., Jr., 1030 Old Bay Ridge Rd., Annapolis, Md. 21403
Wheeler, George F., 9338 Round Top Rd., #A, Cincinnati, Ohio 45239
White, John P., 325 W. 198th St., New York, N.Y. 10025
White, Vivienne T., Corning Hgts. Apts., Corning, N.Y. 14830
Williamson, Samuel R., 17 Woodlawn Rd., Somerset, N.J. 08873
Wolfe, Arthur L., 7999 Dartmoor Rd., Mentor, Ohio 44060
Wolfe, Charles R., Jr., 3630 39th St., NW., #A, Washington, D.C. 20016

Y

Young, Phebe S., Rte. 2, Whitaker Rd., Newark, Del. 19711

Z

Zeller, Charles J., 12W 72nd St., #18C, New York, N.Y. 10023

REISSUE APPLICATIONS FILED

Notice under 37 CFR 1.11(b). The reissue applications listed below are open to inspection by the general public in the indicated Examining Groups and copies may be obtained by paying the fee therefor (37 CFR 1.21(b)).

3,129,382, Re. S.N. 846,630, Filed Oct. 28, 1977, Cl. 323/43.5, ROTARY POTENTIOMETER WITH SPEED REDUCTION GEARING, Larkin B. Scott, Owner of Record: *Perkin-Elmer Corporation, Norwalk, Conn.*, Attorney or Agent: Salvatore A. Giarratana, et al., Ex. Gp.: 212

3,407,388, Re. S.N. 846,358, Filed Oct. 28, 1977, Cl. 340/152 R, CUSTOMER SERVICE UNIT, Robert N. Goldman, Owner of Record: *Telecredit, Inc., Wilmington, Del.*, Attorney or Agent: Edward J. Brenner, et al., Ex. Gp.: 234

3,789,299, Re. S.N. 846,629, Filed Oct. 28, 1977, Cl. 324/95, PROBE FOR RADIATION DETECTOR, Edward E. Aslan, Owner of Record: *The Narda Microwave Corporation, Plainview, N.J.*, Attorney or Agent: Granville M. Brumbaugh, et al., Ex. Gp.: 252

3,847,356, Re. S.N. 842,021, Filed Oct. 14, 1977, Cl. 239/662, SCRAPING PADDLES FOR UNLOADING AND SPREADING MECHANISM USED WITH MANURE SPREADERS, Allison W. Blanshine, Owner of Record: *Sperry Rand Corporation, New Holland, Pa.*, Attorney or Agent: Frank A. Seemar, et al., Ex. Gp.: 313

3,851,872, Re. S.N. 789,891, Filed Apr. 22, 1977, Cl. 271/173, SORTING APPARATUS FOR COLLATING SIMPLEX AND DUPLEX COPIES, Dennis P. Gerbasi, Owner of Record: *Xerox Corporation, Stamford, Conn.*, Attorney or Agent: Melvin A. Klein, Ex. Gp.: 313

3,858,298, Re. S.N. 845,577, Filed Oct. 26, 1977, Cl. 29/237, SWAGING APPARATUS, Jon K. Whitledge, et al., Owner of Record: *Samuel Moore and Company, Mantua, Ohio*, Attorney or Agent: Davidson C. Miller, et al., Ex. Gp.: 323

3,929,186, Re. S.N. 843,080, Filed Oct. 17, 1977, Cl. 165/49, THERMALLY INSULATING WALL UNITS, Otto Alfred Becker, Owner of Record: *Inventor*, Attorney or Agent: Thomas E. Beall, Jr., et al., Ex. Gp.: 342

3,975,725, Re. S.N. 845,012, Filed Oct. 25, 1977, Cl. 340/324 M, DISPLAY PANEL AND SYSTEM FOR OPERATING THE SAME, James A. Ogle, Owner of Record: *Burroughs Corporation, Detroit, Mich.*, Attorney or Agent: Robert A. Green, Ex. Gp.: 234

3,978,371, Re. S.N. 845,104, Filed Oct. 25, 1977, Cl. 315/169 TV, DISPLAY PANEL USING GLOW SPREADING PRINCIPLES, Donald E. Miller, Owner of Record: *Burroughs Corporation, Detroit, Mich.*, Attorney or Agent: Robert A. Green, Ex. Gp.: 256

3,993,526, Re. S.N. 846,107, Filed Oct. 27, 1977, Cl. 156/202, METHOD OF AND APPARATUS FOR MAKING BONDED BELT LOOPS, Joseph W. A. Off, et al., Owner of Record: *Haggar Company, Dallas, Tex.*, Attorney or Agent: Michael A. O'Neil, Ex. Gp.: 161

4,045,910, Re. S.N. 846,781, Filed Oct. 31, 1977, Cl. 47/2, METHOD FOR REDUCING FROST DAMAGE OF PLANTS, Deane C. Arny, et al., Owner of Record: *Wisconsin Alumni Research Foundation, Madison, Wis.*, Attorney or Agent: Dugald S. McDougall, et al., Ex. Gp.: 337

PATENT NOTICES

Certificates of Correction for the Week of Dec. 27, 1977

Re. 29,191	4,005,747	4,037,785	4,046,668
D. 245,345	4,008,532	4,038,185	4,046,702
3,513,255	4,011,608	4,038,448	4,046,982
3,785,840	4,012,694	4,038,451	4,047,110
3,819,661	4,012,821	4,038,485	4,047,367
3,824,230	4,016,193	4,039,128	4,047,386
3,836,578	4,016,249	4,039,143	4,047,491
3,843,309	4,016,542	4,039,406	4,047,682
3,843,712	4,017,186	4,039,541	4,047,770
3,857,651	4,017,619	4,040,390	4,047,902
3,859,484	4,019,539	4,040,427	4,048,038
3,867,380	4,019,784	4,040,488	4,048,137
3,883,574	4,020,865	4,040,736	4,048,216
3,914,282	4,022,786	4,040,878	4,048,220
3,914,683	4,022,916	4,041,007	4,048,576
3,917,581	4,023,454	4,041,150	4,049,032
3,919,285	4,025,302	4,041,272	4,049,210
3,919,286	4,025,341	4,041,406	4,049,230
3,920,643	4,026,264	4,041,614	4,049,320
3,922,297	4,027,001	4,041,617	4,049,399
3,926,553	4,028,155	4,041,758	4,049,558
3,942,253	4,028,799	4,041,794	4,049,685
3,942,805	4,029,718	4,042,293	4,049,716
3,948,970	4,030,203	4,042,486	4,049,758
3,949,142	4,030,897	4,042,499	4,049,767
3,959,346	4,031,170	4,042,728	4,049,881
3,959,764	4,031,337	4,042,743	4,049,893
3,960,502	4,031,675	4,042,907	4,050,042
3,966,962	4,032,266	4,043,020	4,050,055
3,968,111	4,032,317	4,043,596	4,050,138
3,968,200	4,032,549	4,043,990	4,050,204
3,974,200	4,033,015	4,044,040	4,050,321
3,984,174	4,033,257	4,044,330	4,050,393
3,988,951	4,033,466	4,044,347	4,050,509
3,994,883	4,035,435	4,044,576	4,050,561
3,997,781	4,035,467	4,044,668	4,051,383
3,997,901	4,035,531	4,045,085	4,051,691
4,000,485	4,035,818	4,045,206	4,051,895
4,001,060	4,036,078	4,045,363	4,052,164
4,001,106	4,036,286	4,045,495	4,052,165
4,001,317	4,036,299	4,046,151	4,055,209
4,002,175	4,036,659	4,046,380	
4,003,037	4,036,693	4,046,381	
4,003,620	4,037,003	4,046,427	

Disclaimers

3,322,578.—*Ivan P. Thompson*, Hillside, N.J. THERMOCHEMICAL DESURFACING METHOD. Patent dated May 30, 1967. Disclaimer filed Aug. 26, 1977, by the assignee, *Union Carbide Corporation*.

Hereby enters this disclaimer to claims 1 to 7 of said patent.

3,391,392.—*Harold W. Doyle*, Newport Beach, Calif. METHOD AND APPARATUS FOR PATTERN DATA PROCESSING. Patent dated July 2, 1968. Disclaimer filed Oct. 3, 1977, by the assignee, *California Computer Products, Inc.*

Hereby enters this disclaimer to claims 1 through 14 of said patent.

3,676,724.—*Don A. Berlincourt, Chagrin Falls*, and *Kendall A. Pim*, Cleveland Heights, Ohio. MULTI-ELEMENT PIEZOELECTRIC CIRCUIT COMPONENT. Patent dated July 11, 1972. Disclaimer filed Oct. 20, 1977, by the assignee, *Vernitron Corporation*.

Hereby enters this disclaimer to claims 16 to 21 of said patent.

3,702,441.—*Keith R. Thrower*, Bracknell, England FREQUENCY SYNTHESIZING SYSTEM. Patent dated Nov. 7, 1972. Disclaimer filed Aug. 8, 1977, by the assignee, *John Fluke Mfg. Co., Inc.*

Hereby enters this disclaimer to claims 1-6 of said patent.

3,750,418.—*Wendell E. Maudlin*, York, Pa. EVAPORATOR AND CONDENSATE COLLECTOR ARRANGEMENT FOR REFRIGERATION APPARATUS. Patent dated Aug. 7, 1973. Disclaimer filed Oct. 14, 1977, by the assignee, *Borg-Warner Corporation.*

Hereby enters this disclaimer to claim 1 of said patent.

3,805,602.—*Curtis L. Erwin, Jr.*, Portland, Oreg. FUEL USE RATE METER FOR ENGINES. Patent dated Apr. 23, 1974. Disclaimer filed Oct. 17, 1977, by the inventor.

Hereby enters this disclaimer to claims 18 through 24 of said patent.

3,852,149.—*Matthew M. Sitter*, Convent Station, N.J., *Robert M. Meyers*, Fairless Hills, Pa., and *Edward F. Kutch*, Trenton, N.J. INSULATING GLASS WINDOW ASSEMBLIES. Patent dated Dec. 3, 1974. Disclaimer filed Oct. 14, 1977, by the assignee, *Norton Company.*

Hereby enters this disclaimer to claims 1 through 14 of said patent.

3,906,168.—*James Royce McEowen*, Holmdel Township, Monmouth, N.J. VISUAL STATUS INDICATOR CIRCUIT. Patent dated Sept. 16, 1975. Disclaimer filed Oct. 25, 1977, by the assignee, *Bell Telephone Laboratories, Incorporated.*

Hereby enters this disclaimer to claims 1, 2, 3, 4, 9, 13, 14 and 15 of said patent.

3,916,479.—*Howard W. Parker*, Westboro, and *Arlon G. Sangster*, Sterling, Mass. HINGE AND DETENT MECHANISM. Patent dated Nov. 4, 1975. Disclaimer filed Oct. 12, 1977, by the assignee, *Jamesbury Corp.*

Hereby enters this disclaimer to claims 1, 5, and 6 of said patent.

3,925,947.—*Robert M. Meyers*, Fairless Hills, Pa., and *Edward F. Kutch*, Trenton, and *Matthew M. Sitter*, Convent Station, N.J. AUTOMOBILE WINDOW SEALING. Patent dated Dec. 16, 1975. Disclaimer filed Oct. 14, 1977, by the assignee, *Norton Company.*

Hereby enters this disclaimer to claims 1 through 11 of said patent.

3,944,235.—*Alexander L. Gordon*, Worcester, Mass. GASKET WITH HEAT INSULATING PROPERTIES. Patent dated Mar. 16, 1976. Disclaimer filed Oct. 12, 1977, by the assignee, *Federal-Mogul Corporation.*

Hereby enters this disclaimer to claim 10 of said patent.

3,944,469.—*James Long Bittle*, Doylestown, Pa., and *Wayne J. Rubic*, Titusville, N.J. FELINE CALICIVIRUS VACCINE AND PRODUCTION THEREOF. Patent dated Mar. 16, 1976. Disclaimer filed Sept. 19, 1977, by the assignee, *Pitman-Moore, Inc.*

The term of this patent subsequent to Feb. 10, 1993, has been disclaimed.

3,995,532.—*John A. Junck*, Joliet, and *Larry W. Lorimor*, Crest Hill, Ill. PROPORTIONAL CONTROL VALVE WITH PRECONDITIONED INLET MODULATING RELIEF VALVE. Patent dated Dec. 7, 1976. Disclaimer filed Oct. 12, 1977, by the assignee, *Caterpillar Tractor Co.*

Hereby enters this disclaimer to claims 6 and 7 of said patent.

4,006,488.—*Makoto Kuboshima*, Ashigara, Japan. BELLOWS FOR USE IN A FOLDABLE CAMERA. Patent dated Feb. 1, 1977. Disclaimer filed Oct. 18, 1977, by the assignee, *Fuji Photo Film Co., Ltd.*

Hereby enters this disclaimer to claims 1 and 2 of said patent.

4,050,895.—*Edgar E. Hardy*, Kettering, and *Donald J. David*, Centerville. Ohio. OPTICAL ANALYTICAL DEVICE, WAVEGUIDE AND METHOD. Patent dated Sept. 27, 1977. Disclaimer filed Oct. 11, 1977, by the assignee, *Monsanto Research Corporation.*

The term of this patent subsequent to Aug. 9, 1994, has been disclaimed.

Dedications

3,533,201.—*William R. Tyler*, Lower Burrell, Pa. FASCIA AND FLASHING CONSTRUCTION. Patent dated Oct. 13, 1970. Dedication filed Oct. 7, 1977, by the assignee, *Aluminum Company of America.*

Hereby dedicates to the Public the remaining term of said patent.

3,943,814.—*Henry Wemekamp*, Willowdale, Ontario. Canada. ELECTRIC ORGAN TONE GENERATING SYSTEM. Patent dated Mar. 16, 1976. Dedication filed Aug. 22, 1977, by the assignee, *Computeacher Limited.*

Hereby dedicates to the Public the remaining term of said patent.

3,995,386.—*Hassan Paddy Abdel Salam*, London, England. INFORMATION DISPLAY DEVICE. Patent dated Dec. 7, 1976. Disclaimer filed Oct. 11, 1977, by the assignee, *Air Products and Chemicals, Inc.*

Hereby dedicates to the Public the remaining term of said patent.

4,027,241.—*Jeremy P. Jauch*, Kearny, N.J. SOLID STATE WATT AND VAR TRANSDUCER. Patent dated May 31, 1977. Dedication filed Oct. 3, 1977, by the assignee, *Westinghouse Electric Corporation.*

Hereby dedicates to the Public the entire term of said patent.

Availability of U.S. Patent Classification Microfilm Publications

The Patent and Trademark Office announces the availability of new editions of two patent classification microfilm publications: "U.S. Patent Classification—Subclass Listing" (PTO 002.1-7710M) and "Patent Number Sequence Classification Record" (PTO 001.1-7710M, previously entitled "Classification of U.S. Patents"). Both publications are dated October 1977 and reflect new patent issues and reclassifications through the end of the month.

The "U.S. Patent Classification—Subclass Listing" presents in sequence by the classes, subclasses, and digest of the U.S. classification system, the patent numbers of the U.S. patents which are classified as "originals," "cross references," and "unofficial cross references" in each of the subclasses. Within each subclass, the patent numbers are listed in numerical sequence. Symbols appear in conjunction with patent numbers to denote those patents which are classified as cross references in a subclass.

The "Patent Number Sequence Classification Record" consists of a listing, in ascending numeric sequence, of all U.S. patents and related items together with the original and all cross-reference classifications (both "official" and "unofficial") for each patent current as of the date of publication.

Both of the above publications are offered for sale by the National Technical Information Service in 16mm microfilm on plain (open) reels or in any of three types of cartridges—3M, Recordak, and Kodak "Thread Easy" magazines. They may be purcased in sets or by individual reel.

To order:

U.S. Patent Classification—Subclass Listing

The entire set of 9 reels carries accession number PB 269 981 and is priced at $38.00 in plain reels and $56.00 in cartridges. Individual reels may be purchased at $6.00 each in plain reels or $8.00 in cartridges. Orders must specify the NTIS accession number given below and, also, by the appropriate letter code,* the choice of the optional forms in which the buyer desires to receive the microfilm.

Reel Number	NTIS Accession Number*	Classes (contents)
1-9 (Full set)	PB 269 981	All.
1	PB 269 982	Designs, Plants, Cl.2-42/68.
2	PB 269 983	42/68-81/186.
3	PB 269 984	81/186-134/133.
4	PB 269 985	134/133-198/308.
5	PB 269 986	198/308-241/101. 7
6	PB 269 987	241/101. 7-264/182.
7	PB 269 988	264/182-330/128.
8	PB 269 989	330/128-426/263.
9	PB 269 990	426/263-560/266.

Patent Number Sequence Classification Record

The entire set of 22 reels carries accession number PB 269 991 and is priced at $90.00 in plain reels and $134.00 in cartridges. A partial set of the last 8 reels (Nos. 15–22, from 1957 to the present), is priced at $34.00 in plain reels and $50.00 in cartridges. Individual reels may be purchased at $6.00 each in plain reels or $8.00 in cartridges. Please specify the form in which you want to receive the microfilm by writing the appropriate letter code* *after* the accession number.

Reel Number	NTIS Accession Number*	Beginning Patent Number	Ending Patent Number
1-22 (Full set)	PB 269 991	All	
15-22 (Partial set)	PB 269 992	2, 811, 720 [1]	4, 055, 851
1	PB 269 993	See below [2]	
2	PB 269 994	6, 898	269, 043
3	PB 269 995	269, 044	515, 598
4	PB 269 996	515, 599	754, 241
5	PB 269 997	754, 242	990, 090
6	PB 269 998	990, 091	1, 221, 658
7	PB 269 999	1, 221, 659	1, 452, 907
8	PB 270 000	1, 452, 908	1, 676, 786
9	PB 270 001	1, 676, 787	1, 890, 050
10	PB 270 002	1, 890, 051	2, 084, 604
11	PB 270 003	2, 084, 605	2, 271, 979
12	PB 270 004	2, 271, 980	2, 455, 944
13	PB 270 005	2, 455, 945	2, 635, 165
14	PB 270 006	2, 635, 166	2, 811, 719
15	PB 270 007	2, 811, 720	2, 990, 115
16	PB 270 008	3, 990, 116	3, 162, 540
17	PB 270 009	3, 162, 541	2, 330, 051
18	PB 270 010	3, 330, 052	3, 503, 583
19	PB 270 011	3, 503, 584	3, 683, 126
20	PB 270 012	3, 683, 127	3, 862, 558
21	PB 270 013	3, 862, 559	4, 034, 583
22	PB 270 014	4, 034, 584	4, 055, 851

* Insert the letter code representing choice of one of the follwing optional means of receiving the film:
P = Plain reels in cardboard boxes.
M = Reels in 3M cartridges.
R = Reels in Recordak cartridges.
T = Reels in "Thread Easy" magazines.

[1] Issued in October 1957.
[2] Reel 1 includes the following ranges of numbers:

"Additional Improvements"	AI2-AI318
Design Patents	D1-D246, 205
Plant Patents	PP1-PP4, 137
Reissue Designs	RD301-RD25, 414
Reissue Patents	RE1-RE29, 461
Reissue Patents Issued Prior to 1836	RX35-RX112
Defensive Publications	T856, 001-T963, 004
Patents Issued Prior to 1836	X1-X11, 280
Patents	1-6, 897

Address ordera to:

National Technical Information Service
U.S. Department of Commerce
Springfield, Virginia 22161

Enclose payment in check or money order or authorization to charge the amount of the order to the purchaser's NTIS deposit account or American Express Card, giving the account number. All prices quoted apply to the North American continent (U.S., Canada, Mexico) only. Customers outside this area should write NTIS for a price quotation.

Nov. 23, 1977.

ALFRED C. MARMOR,
Administrator for Documentation.

PATENT EXAMINING CORPS

RENE D. TEGTMEYER, Assistant Commissioner
WILLIAM FELDMAN, Deputy Assistant Commissioner

CONDITION OF PATENT APPLICATIONS AS OF DECEMBER 3, 1977

PATENT EXAMINING GROUPS	Actual Filing Date of Oldest New Case Awaiting Action
CHEMICAL EXAMINING GROUPS	
GENERAL CHEMISTRY AND PETROLEUM CHEMISTRY, GROUP 110—S. N. ZAHARNA, Director. Inorganic Compounds; Inorganic Compositions; Organo-Metal and Organo-Metalloid Chemistry; Metallurgy; Metal Stock; Electro Chemistry; Batteries; Hydrocarbons; Mineral Oil Technology; Lubricating Compositions; Gaseous Compositions; Fuel and Igniting Devices.	5-3-77
GENERAL ORGANIC CHEMISTRY, GROUP 120—A. L. LEAVITT, Director. Heterocyclic, Amides; Alkaloids; Azo; Sulfur; Misc. Esters; Carbohydrates; Herbicides; Poisons; Medicines; Cosmetics; Steroids; Oxo and Oxy; Quinones; Acids; Carboxylic Acid Esters; Acid Anhydrides; Acid Halides.	1-21-77
HIGH POLYMER CHEMISTRY, PLASTICS AND MOLDING, GROUP 140—A. P. KENT, Director. Synthetic Resins; Rubber; Proteins; Macromolecular Carbohydrates; Mixed Synthetic Resin Compositions; Synthetic Resins With Natural Polymers and Resins; Natural Resins; Reclaiming; Pore-Forming; Compositions (Part) e.g.: Coating; Molding; Ink; Adhesive and Abrading Compositions; Molding, Shaping, and Treating Processes.	2-7-77
COATING AND LAMINATING, BLEACHING, DYEING AND PHOTOGRAPHY, GROUP 160—R. FRIEDMAN, Director. Coating; Processes and Misc. Products; Laminating Methods and Apparatus; Stock Materials; Adhesive Bonding; Special Chemical Manufactures; Special Utility Compositions; Bleaching; Dyeing and Photography.	12-6-76
SPECIALIZED CHEMICAL INDUSTRIES AND CHEMICAL ENGINEERING, GROUP 170—H. S. VINCENT, Director. Fertilizers; Foods; Fermentation; Analytical Chemistry; Reactors; Sugar and Starch; Paper Making; Glass Manufacture; Gas; Heating and Illuminating; Cleaning Processes; Liquid Purification; Distillation; Preserving; Liquid, Gas, and Solid Separation; Gas and Liquid Contact Apparatus; Refrigeration; Concentrative Evaporators; Mineral Oils Apparatus; Misc. Physical Processes.	11-3-76
ELECTRICAL EXAMINING GROUPS	
INDUSTRIAL ELECTRONICS, PHYSICS AND RELATED ELEMENTS, GROUP 210—W. L. CARLSON, Director. Generation and Utilization; General Applications; Conversion and Distribution; Heating and Related Art Conductors; Switches; Photography; Motion Pictures; Illumination; Horology; Acoustics; Recorders; Weighing Scales.	8-18-76
SPECIAL LAWS ADMINISTRATION, GROUP 220—C. D. QUARFORTH, Director. Ordnance, Firearms and Ammunition; Radar, Underwater Signalling, Directional Radio, Torpedoes, Seismic Exploring, Radio-Active Batteries; Nuclear Reactors, Powder Metallurgy, Rocket Fuels; Radio-Active Material.	7-8-76
INFORMATION TRANSMISSION, STORAGE AND RETRIEVAL, GROUP 230—J. F. COUCH, Director. Communications; Multiplexing Techniques; Facsimile; Data Processing, Computation and Conversion; Storage Devices and Related Arts.	1-24-77
RECEPTACLES, SANITATION AND CLEANING, WINDING, AND MEASURING, GROUP 240—N. ANSHER, Director. Receptacles; Joint Packing; Conduits; Plumbing Fixtures; Textile Spinning; Food; Agitating; Cleaning; Pressing; Geometrical Instruments; Sound Recording; Winding and Reeling; Measuring and Testing; Indicating.	1-5-77
ELECTRONIC COMPONENT SYSTEMS AND DEVICES, GROUP 250—L. FORMAN, Director. Semi-Conductor and Space Discharge Systems and Devices; Electronic Component Circuits; Wave Transmission Lines and Networks; Optics; Radiant Energy; Measuring.	9-3-76
DESIGNS, GROUP 290—C. D. QUARFORTH, Director. Industrial Arts; Household, Personal and Fine Arts.	5-6-76
MECHANICAL EXAMINING GROUPS	
HANDLING AND TRANSPORTING MEDIA, GROUP 310—D. J. STOCKING, Director. Conveyors; Hoists; Elevators; Article Handling Implements; Store Service; Sheet and Web Feeding; Dispensing; Fluid Sprinkling; Fire Extinguishers; Coin Handling; Check Controlled Apparatus; Classifying and Assorting Solids; Boats; Ships; Aeronautics; Motor and Land Vehicles and Appurtenances; Brakes; Railways and Railway Equipment.	10-15-76
MATERIAL SHAPING, ARTICLE MANUFACTURING, TOOLS, GROUP 320—S. S. MATTHEWS, Director. Manufacturing Processes, Assembling, Combined Machines, Special Article Making; Metal Deforming; Sheet Metal and Wire Working; Metal Fusion—Bonding, Metal Founding; Metallurgical Apparatus: Plastics Working Apparatus; Plastic Block and Earthenware Apparatus: Machine Tools for Shaping or Dividing; Work and Tool Holders, Woodworking; Tools; Cutlery; Jacks.	4-1-77
AMUSEMENT, HUSBANDRY, PERSONAL TREATMENT, INFORMATION, GROUP 330—G. M. FORLENZA, Director. Amusement and Exercising Devices; Projectors; Animal and Plant Husbandry; Butchering; Earth Working and Excavating; Fishing, etc.; Tobacco; Artificial Body Members; Dentistry; Jewelry; Surgery; Toiletry; Printing; Typewriters; Stationery; Information Dissemination.	11-8-76
HEAT, POWER, AND FLUID ENGINEERING, GROUP 340—B. R. GAY, Director. Power Plants; Combustion Engines; Fluid Motors; Reaction Motors; Pumps; Rotary Engines and Pumps; Heat Generation and Exchange; Refrigeration; Ventilation; Drying; Temperature and Humidity Regulation; Machine Elements; Couplings; Gearing; Bearings; Clutches; Power Transmission; Fluid Handling and Control; Lubrication.	12-2-76
GENERAL CONSTRUCTIONS, TEXTILES AND MINING, GROUP 350—M. M. NEWMAN, Director. Joints; Fasteners; Rod, Pipe and Electrical Connectors; Miscellaneous Hardware; Locks; Building Structures; Closure Operators; Bridges; Closures; Earth Engineering; Drilling; Mining; Furniture; Supports; Cabinet Structures; Centrifugal Separations; Coating; Textiles; Apparel and Shoes; Sewing Machines.	4-1-77

Expiration of patents: The patents within the range of numbers indicated below expire during December 1977, except those which may have expired earlier due to shortened terms under the provisions of Public Law 690, 79th Congress, approved August 8, 1946 (60 Stat. 940) and Public Law 619, 83rd Congress, approved August 23, 1954 (68 Stat. 764), or which may have had their terms curtailed by disclaimer under the provisions of 35 U.S.C. 253. Other patents, issued after the dates of the range of numbers indicated below, may have expired before the full term of 17 years for the same reasons, or have lapsed under the provisions of 35 U.S.C. 151.

Patents .... Numbers 2,962,719 to 2,966,680, inclusive
Plant Patents .... Numbers 1,991 to 2,008, inclusive

REISSUES

DECEMBER 27, 1977

Matter enclosed in heavy brackets [ ] appears in the original patent but forms no part of this reissue specification; matter printed in italics indicates additions made by reissue.

Re. 29,501
DEODORIZER SHEET MATERIAL AND INSOLE
Herbert Lapidus, Ridgefield, Conn., assignor to Combe Incorporated, White Plains, N.Y.
Original No. 3,842,519, dated Oct. 22, 1974, Ser. No. 326,757, Jan. 26, 1973. Application for reissue Oct. 20, 1976, Ser. No. 734,185
Int. Cl.² A43B *13/38*
U.S. Cl. 36—44 **43 Claims**

1. A shoe insert for absorbing odors resulting from perspiring feet comprising a cured sheet of [opencelled] *open-celled* foam, at least one side of the sheet having a relatively smooth skin formed during curing which is impervious to passage of charcoal particles, said foam containing homogeneously distributed through the solid part thereof finely divided activated charcoal particles in an amount effective to absorb odors when said sheet is subjected to contact with foot perspiration and to passage of odor-filled air through interstitial spaces within said foam, said charcoal particles having been incorporated prior to frothing and curing of said foam.

Re. 29,502
FURNACE APPARATUS
John C. Jaronko, and John T. Jaronko, both of New Britain, Conn., assignors to Nutmeg Sanitation, Inc., New Britain, Conn.
Original No. 3,906,874, dated Sept. 23, 1975, Ser. No. 393,021, Aug. 30, 1973. Application for reissue Jan. 15, 1976, Ser. No. 649,451
Int. Cl.² F23B *1/32;* **F23G** *5/06*
U.S. Cl. 110—14 **8 Claims**

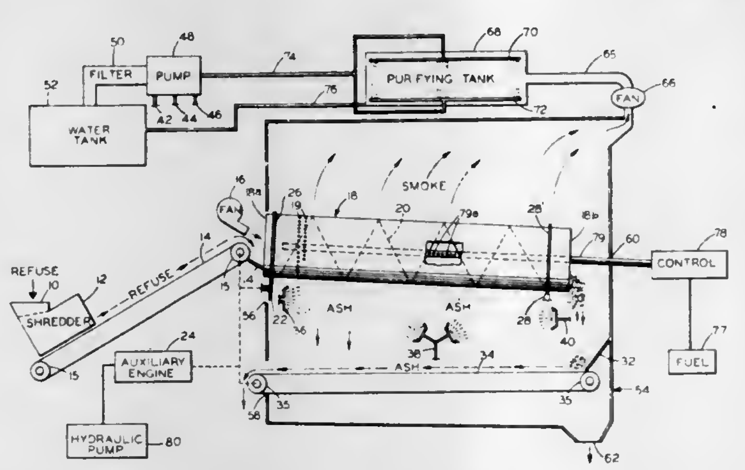

1. [A mobile] *An* apparatus for collecting and burning refuse comprising:
a chassis [having wheels for movement between collection and and disposal points and] having thereon the following structures:
a hopper disposed on said chassis for receiving refuse;
a shredder communicating with said hopper for reducing the size of the refuse received by said hopper to particles suitable for burning;
a first transfer means for receiving refuse conditioned by said shredder;
[a cylindrical member] *an elongated hollow chamber* having a perforate skin for allowing passage of ash therethrough and having first and second ends, said first end communicating with said first transfer means for receiving said refuse;
means for urging at least some of said refuse through said [cylindrical member] *chamber* to said second end;
a fan communicating with said [cylindrical member] *chamber* for supplying air to the interior of said [cylindrical member;] *chamber;*
a hollow tube disposed generally co-axially with respect to said [cylindrical member] *chamber* and having a plurality of apertures disposed substantially uniformally about the circumference [of said apertures], said apertures being sized for burning a fuel;
a fuel supply and control means for supplying fuel to said hollow tube;
a liquid supply and a liquid spray means for wetting ash passing out of said [cylindrical member] *chamber* through said perforate skin and said second end of said [cylindrical membr;] *chamber;*
second transfer means for moving ash from said [cylindrical member;] *chamber;*
an ash receiving means disposed in communication with said second transfer means;
a substantially closed housing mounted on said chassis and enclosing said [cylindrical member] *chamber*, liquid [spary] *spray* means, second transfer means and at least a portion of said hollow tube;
a second fan in fluid communication with said substantially closed housing urging smoke from the area of said substantially closed housing; and
a purifying tank for washing the smoke conducted by said second fan and in fluid communication with said fan.

Re. 29,503
APPARATUS FOR USE AS A GAS COMPRESSOR OR BLOWER
John Maximilian Jules Varga, Halifax, England, assignor to Carding Specialists (Canada) Limited, Toronto, Canada
Original No. 3,930,762, dated Jan. 6, 1976, Ser. No. 377,795, July 9, 1973. Application for reissue Feb. 14, 1977, Ser. No. 768,357
Claims priority, application United Kingdom, July 11, 1972, 32296/72
Int. Cl.² F04B *7/06, 39/02*
U.S. Cl. 417—492 **9 Claims**

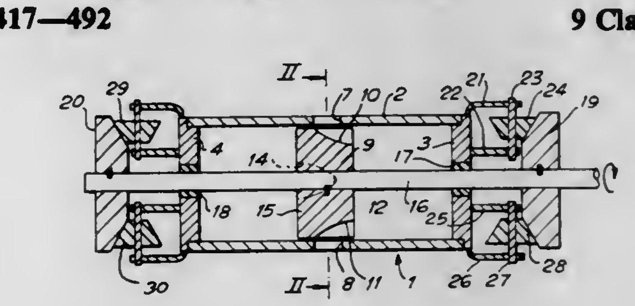

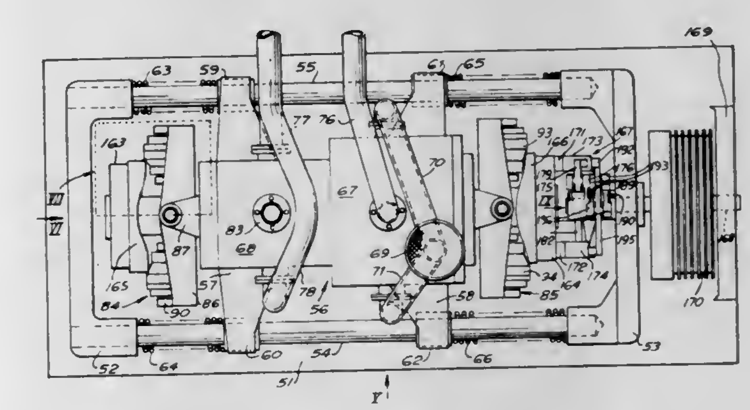

1. A gas compressor or blower comprising a cylinder having air intake and exhaust ports; a piston which is rotatably and reciprocably movable in the cylinder; valve means for admitting air into and exhausting air from at least one chamber lying to one side of the piston; a piston shaft to which the piston is secured, the piston shaft passing through seals at the axial ends

of the cylinder; means for applying a rotary drive to the piston [rod] *shaft*; and a cam arrangement for causing reciprocation of the piston [rod] *shaft* as it rotates; the arrangement of ports and valve means being such that as the piston rotates and reciprocates air is induced into the chamber, is compressed in the chamber and then exhausted from the chamber; means for axially balancing the piston shaft comprising support means, and means for mounting said cylinder on said support means so that said cylinder has free axial movement on said support means.

Re. 29,504
UNSATURATED HYDROCARBONS POLYMERIZATION CATALYSTS CONTAINING TRANSITION METAL COMPLEXES AND BRØNSTED ACIDS
Francois Dawans, Brussels, Belgium, and Philippe Teyssie, Vesinet, France, assignors to Institut Francais du Petrole, des Carburants et Lubrifiants, Rueil-Malmaison, France
Original No. 3,497,488, dated Feb. 24, 1970, Ser. No. 558,244, June 17, 1966. Application for reissue Sept. 22, 1970, Ser. No. 74,537
Claims priority, application France, June 17, 1965, 65.21306
Int. Cl.² C08F *4/82, 4/76, 4/78*
U.S. Cl. 526—135 **31 Claims**

1. A catalyst composition consisting essentially of the reaction product of
(a) a non-ionic coordination complex of a transition metal of Groups IV through VIII of Mendeleev's Periodic Table as the nuclear atom, and unsaturated hydrocarbon as ligand, said hydrocarbon having at least one pair of π electrons; and
(b) a Brønsted acid, the molar of (a) to (b) being 0.1:1 to 3:1 respectively.

Re. 29,505
ELECTRIC CONTROL DEVICE FOR A CAMERA
Hiroshi Aizawa, Machida, and Mitsutoshi Ogiso, Kawasaki, both of Japan, assignors to Canon Kabushiki Kaisha, Tokyo, Japan
Original No. 3,812,510, dated May 21, 1974, Ser. No. 319,743, Dec. 29, 1972. Application for reissue Mar. 6, 1975, Ser. No. 555,729
Claims priority, application Japan, Dec. 30, 1973, 47-1089
Int. Cl.² G03B *7/00, 9/28*
U.S. Cl. 354—235 **22 Claims**

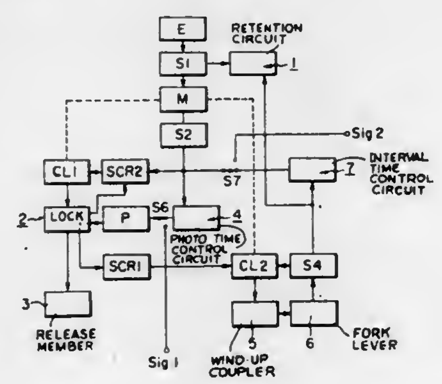

10. In a camera having a shutter capable of being wound and a shutter release member, comprising a rotatable motor, a first electro-magnetic clutch means coupled to the shutter for releasing the shutter and coupleable to the motor, a second electro-magnetic clutch means coupled to the shutter for winding the shutter and coupleable to the motor being rotated, a first clutch control means coupled to the first electro-magnetic clutch means and the release member for engaging said first clutch means in response to operation of the release member, a lock means coupled to the release member and said first electro-magnetic clutch means for locking the release member in a release position when the first electro-magnetic clutch means is engaged, a first switch means responsive to the operation of the lock means for disengaging said first clutch means, a photographic time control circuit coupled to said lock means and rendered effective by operation of said lock means, said time control circuit including a timer, first signal means in said time control circuit coupled to the timer for producing an output signal in response to the timer, second signal means in the time control circuit for producing an output signal in response to external stimuli, a lock release means operative to release said lock means in response to the output signal of said first signal means and said second signal means, a switching means in the time control circuit coupled to said first signal means and said second signal means and said lock release means for selectively applying one of the signals from said first signal means and the signals from said second signal means to said lock release means, a second electro-magnetic clutch control means responsive to the operation of said lock release means for engaging said second clutch means to wind the shutter, a second switch means coupled to the shutter and coupled to said second clutch means for disengaging said second clutch means in response to the shutter being wound.

PLANT PATENTS

GRANTED DECEMBER 27, 1977

Illustrations for plant patents are usually in color and therefore it is not practicable to reproduce the drawing.

4,169
PEAR TREE
Guiseppe Crisafulli, Sr., deceased, late of Glendive, Mont., by Joseph Crisafulli, Jr., executor, P.O. Box 1051, Glendive, Mont. 59330
Filed July 19, 1976, Ser. No. 706,742
Int. Cl.² A01H *5/03*
U.S. Cl. Plt.—36 **1 Claim**

1. A new and distinct variety of pear tree, substantially as illustrated and described, which is medium to slow growing, semi-dwarf, spreading, exceptionally hardy, resistant to fireblight, and a regular and light to moderately productive bearer of medium-size good-keeping fruit, of good flavor and quality, having yellow skin with a red blush and creamy white flesh, the flesh being of smooth texture with few stone cells, juicy and subacid.

4,170
PEACH TREE-MUTATION OF LORING VARIETY
Frederick Beyer, Puducah, Ky., assignor to Stark Brothers Nurseries & Orchards Company, Louisiana, Mo.
Filed Dec. 6, 1976, Ser. No. 747,683
Int. Cl.² A01H *5/03*
U.S. Cl. Plt.—43 **1 Claim**

1. A new and distinct variety of peach tree, substantially as illustrated and described, which bears fruit of excellent quality which ripens approximately 10 to 14 days earlier than the fruit of the Loring Peach variety (unpatented), and develops a more intense red blush over nearly all of its surface approximately 8 to 10 days prior to harvest maturity.

4,171
PEACH TREE-MUTATION OF RIO OSO GEM VARIETY
David A. Diebold, Kelso, Mo., assignor to Stark Brothers Nurseries & Orchards Company, Louisiana, Mo.
Filed Dec. 17, 1976, Ser. No. 751,727
Int. Cl.² A01H *5/03*
U.S. Cl. Plt.—43 **1 Claim**

1. A new and distinct variety of peach tree, which originated as a whole tree mutation of the Rio Oso Gem variety substantially as illustrated and described, which bears fruit which ripens approximately 17 to 18 days earlier than that of the Rio Oso Gem variety and approximately 8 days earlier than that of the Early Rio Oso Gem variety.

4,172
ROSE PLANT—VOLARE VARIETY
Gayle Kent McDaniel, Carlton, Oreg., assignor to Carlton Rose Nurseries, Inc., Carlton, Oreg.
Filed Jan. 14, 1977, Ser. No. 759,542
Int. Cl.² A01H *5/00*
U.S. Cl. Plt.—20 **1 Claim**

1. A new and distinct variety of rose plant of the Hybrid Tea Class obtained as a seedling from unnamed seed parent No. 2573-V-69 and unnamed pollen parent No. 44-E-66 characterized by its ability to yield small to medium-sized long lasting blooms on a continuous basis in a greenhouse substantially as shown and described.

4,173
ROSE PLANT-CHARISMA VARIETY
Robert G. Jelly, Richmond, Ind., assignor to The Conard-Pyle Company, West Grove, Pa.
Filed Jan. 18, 1977, Ser. No. 760,412
Int. Cl.² A01H *5/00*
U.S. Cl. Plt.—22 **1 Claim**

1. A new and distinct variety of rose plant of the Floribunda class substantially as herein shown and described, characterized particularly as to novelty by a unique combination of vibrant multicolor bloom, vigorous habit of growth, excellent foliage having resistance to mildew and blackspot, ability to withstand moderate sub-zero temperatures, and an ability for its cut flowers to last twelve to fifteen days at room temperature indoors.

PATENTS

GRANTED DECEMBER 27, 1977

ERRATA

For CLASS	See PATENT NO.
073–660	4,064,704
134–015	4,064,884
180–155	4,064,967
366–348	4,065,105
366–076	4,065,106
366–343	4,065,107
366–076	4,065,108
062–510	4,065,279
134–167 R	4,065,325
250–445	4,065,397
424–248.56	4,065,453
560–059	4,065,489
560–204	4,065,490
428–522	4,065,624
428–596	4,065,625
428–629	4,065,626
364–464	4,065,661
364–464	4,065,663
364–487	4,065,665
364–759	4,065,666
362–217	4,065,667
363–019	4,065,713
365–049	4,065,756
365–244	4,065,757

PATENTS

GRANTED DECEMBER 27, 1977

GENERAL AND MECHANICAL

4,064,562
INTEGRAL RAIN CAPE AND HAT
Bernice S. Kenny, 183 Eglantine Lane, Fort Myers Beach, Fla. 33931
Continuation-in-part of Ser. No. 607,589, Oct. 20, 1975, abandoned. This application Nov. 10, 1976, Ser. No. 740,742
Int. Cl.^{2} A41D *9/00*
U.S. Cl. 2—84 **3 Claims**

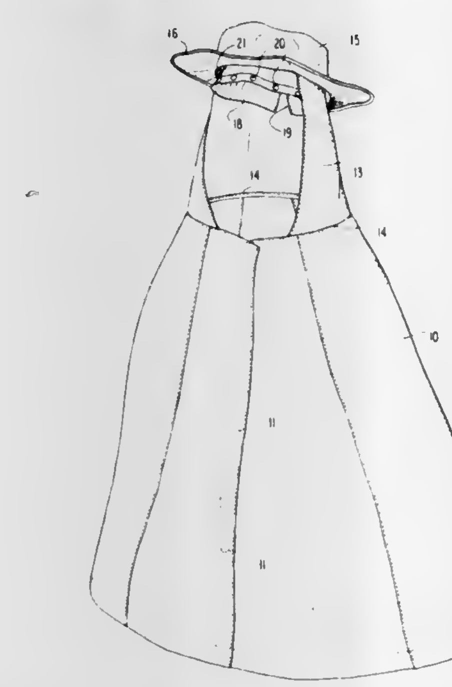

1. A garment comprising a cape body, a neck section attached to and rising from the cape body and having a frontal opening, a hat section attached to the top of the neck section, a retaining skirt-like element attached to the hat section interiorly of both the hat section and the neck section, the hat section having a crown portion receiving, surrounding and at least partly enclosing the neck section and the skirt-like element when the latter are extended below the hat section, a first set of fastener components on the interior of the hat section, and a cooperating set of fastener components on the skirt-like element, whereby the entire cape body and neck section can be rolled into a compact form inside of the hat section and retained therein by engaging the fastener components of the skirt-like element with the fastener components of the hat section, the rolled cape body and neck section then being enclosed and held between the hat section and retaining skirt-like element.

4,064,563
BILLIARD GLOVE
Alvin R. Stokes, 700 N. Zimmer, Pampa, Tex. 79065
Continuation of Ser. No. 557,907, March 13, 1975, abandoned. This application Aug. 9, 1976, Ser. No. 712,517
Int. Cl.^{2} A41D *19/00*
U.S. Cl. 2—161 A **4 Claims**

1. A billiard glove comprising, in operative combination

a. a plurality of dimensionally stable flexible palmar panel portions and a plurality of dorsal smooth surfaced flexible panel portions and an ulnar elastic panel portion forming, together, a hand enclosing and covering array of panel portions, and

b. distally extending from said hand enclosing array of panel portions a plurality of finger enclosing dorsal and palmar smooth surfaced dimensionally stable flexible panel portions, one of which plurality of finger enclosing panel portions form a covering for a player's thumb, another part of which finger enclosing dorsal and palmar panel portions comprises an array of dorsal and palmar finger covering panel portions for a player's index finger and another part of which finger enclosing distal dorsal and palmar panel portions comprises an array of dorsal and palmar smooth surfaced panel portions forming a covering for a player's middle finger and having an ulnar edge,

c. said glove providing an orifice between said ulnar elastic panel and said ulnar edge of said covering for said middle finger to thereby expose the fingers of a player's hand,

d. the dorsal portion of said hand enclosing array of panel portions being continuous with the dorsal portion of each of said finger covering panel portions and the palmar portions of said hand enclosing array of panel portions being continuous with the palmar portions of the finger covering panel portions, and wherein

b.1. said panel portions for the player's index finger comprise a dorsal panel portion and a palmar panel portion which are continuous with each other along the medial side of

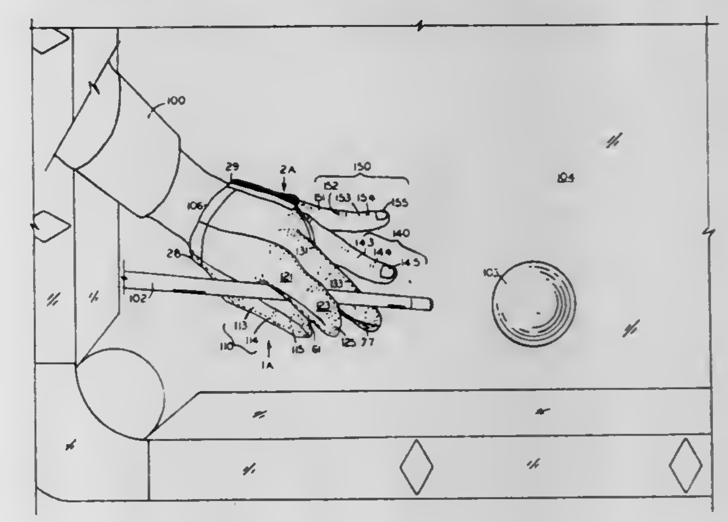

said panel portions for the index finger and which are provided with a seam therebetween on the dorsal side of said index finger covering panel portions, and

b.2. said panel portions for the middle finger comprises a panel which extends distally from a palmar hand portion thereof and has a dorsal distal portion and a palmar distal portion continuous with each other at the medial edge thereof and joins a seam spaced away dorsally from said medial edge, and

b.3. said panel portions for a player's thumb comprises a panel which extends distally from said hand enclosing array of panels and comprises a distal dorsal portion and a distal thumb palmar portion continuous with each other along their ulnar edge and joins a seam dorsally spaced away from said ulnar edge and joined to a dorsal thumb covering panel portion.

4,064,564
CHITIN DERIVED SURGICAL GLOVE POWDER
Donald James Casey, Ridgefield, Conn., assignor to American Cyanamid Company, Stamford, Conn.
Filed Nov. 3, 1976, Ser. No. 738,200
Int. Cl.^{2} A61B *19/04;* **A41D** *19/00*
U.S. Cl. 2—168 **6 Claims**

1. A surgical glove of natural or synthetic rubber
having on the surface thereof in a small but lubricity imparting quantity
a finely divided biodegradable powder consisting essentially of
an enzymatically degradable form of poly(N-acetyl-D-glucosamine) selected from the group consisting of poly[N-acetyl-6-O-(carboxymethyl)-D-glucosamine],

poly[N-acetyl-6-O-(2'-hydroxyethyl)-D-glucosamine],
poly[N-acetyl-6-O-(ethyl)-D-glucosamine], and
poly(N-acetyl-D-glucosamine) itself

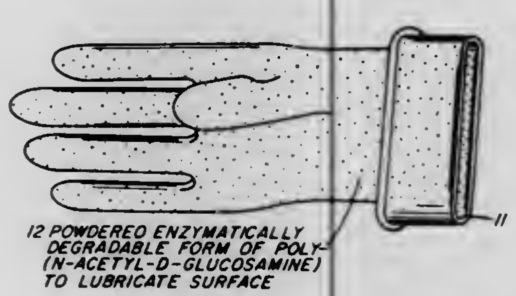

which form of poly(N-acetyl-D-glucosamine) is slowly enzymatically degraded by contact with body tissues.

4,064,565
HELMET STRUCTURE
William S. Griffiths, 4425 View St., Oakland, Calif. 94611
Filed May 13, 1976, Ser. No. 685,786
Int. Cl.² A42B *3/02*
U.S. Cl. 2—412 **5 Claims**

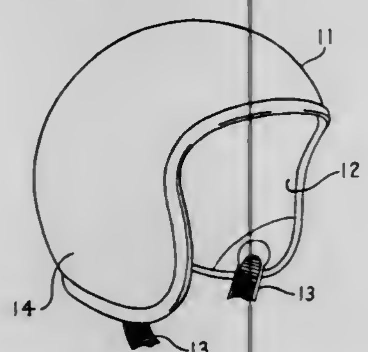

1. An improved helmet structure comprising a limitedly flexible outer shell having the shape of the head of a person and adapted for deflection adjacent the opening therein so as to fit over the head of a person, a conformal layer of a slowly conforming thermoplastic or pressure deformable material within said shell disposed on a substantial area of the interior surface of said shell for conforming to the physical configuration of the skull of a wearer of the helmet in physical engagement with a substantial portion of such skull, an impact absorbing layer disposed between said shell and said conformal layer and extending over a substantial area of the interior of said shell and a transfer layer of substantially incompressible fluid or gel disposed between said impact absorbing layer and said conformal layer and having a thin semirigid liner adjacent said impact absorbing layer for applying a substantially uniform pressure over the surface of said conformal layer upon the application of a force to the transfer layer from said energy absorbing layer.

4,064,566
METHOD OF ADHERING BONE TO A RIGID SUBSTRATE USING A GRAPHITE FIBER REINFORCED BONE CEMENT
James C. Fletcher, Administrator of the National Aeronautics and Space Administration, with respect to an invention of; Albert C. Knoell, La Crescenta, and Hugh G. Maxwell, La Canada, both of Calif.
Filed Apr. 6, 1976, Ser. No. 674,194
Int. Cl.² A61F *1/24*
U.S. Cl. 3—1.9 **7 Claims**

1. A method of adhering bone to the surface of a rigid substrate comprising the steps of:
applying to the bone and surface a surgical bone cement composition comprising a dispersion of 2 to 12% by weight of high modulus graphite fibers having a diameter from 1 to 50 microns and a length from 0.1 mm to 15 mm

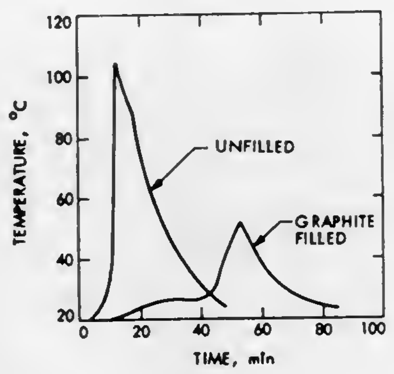

within a biocompatible polymer dissolved in a biocompatible reactive monomer; and
curing the cement to form an adherent flexural bond.

4,064,567
PROSTHESIS-TO-BONE INTERFACE SYSTEM
Albert H. Burstein, Greenwich, Conn., and Bertram L. Koslin, Yorktown Heights, N.Y., assignors to The Sampson Corporation, Pittsburgh, Pa.
Filed Sept. 15, 1976, Ser. No. 723,615
Int. Cl.² A61F *1/24*
U.S. Cl. 3—1.91 **13 Claims**

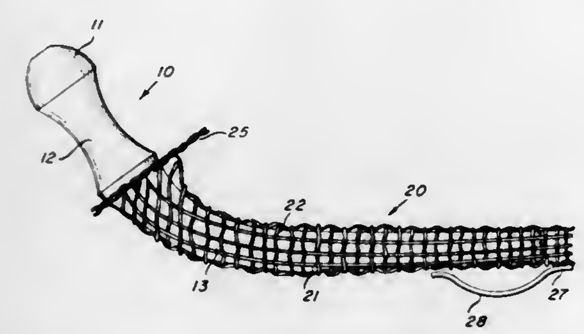

1. A prosthesis-to-bone interface comprising a sheath formed of a single thickness of a relatively rigid, malleable and intersticiated material, generally conforming in shape and adapted to receive the stem of a prosthesis therein, and means for spacing the inner wall of said sheath from said stem to define a space within which bone cement may be received.

4,064,568
KNEE-JOINT ENDOPROSTHESES
Hans Grundei, and Wolfram Thomas, both of Lubeck, Germany, assignors to Sanitatshaus Schuutt & Grundei, Lubeck, Germany
Filed Nov. 8, 1976, Ser. No. 739,819
Claims priority, application Germany, Nov. 6, 1975, 2549819
Int. Cl.² A61F *1/24*
U.S. Cl. 3—1.911 **6 Claims**

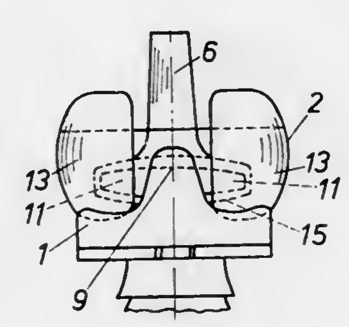

1. In a knee-joint endoprosthesis, consisting of a lower tibia section to be anchored in the shin-bone by a lower shank, which section has, on either side of a central ridge which extends from front to rear, a bearing face which rises in a curve

towards the front and which is hollowed-out in cross-section, and of a femur section which is to be anchored in the thighbone by an upper shank and which is provided with two pads which are yoked together across the ridge and are supported on the bearing faces, the improvement which consists in that a saddle-shaped ridge is provided with a fixed guiding cross-shaft which forms a free spigot on either side of said ridge and which lies off and to the rear of the centre axis of said lower shank when the joint is in the extended position, in that said two curved, hollowed-out bearing faces, and said supporting pads, which conform to said bearing faces in the extended position, diminish in width from front to rear as a result of said ridge becoming wider in the rearward direction, in that said spigots engage with clearance in guide grooves in said supporting pads which extend approximately parallel to the lower faces of said pads and which open upwards at their rear ends, and in that the extension of the two sections of the joint is restricted by an abutment.

4,064,569
ARTIFICIAL POLYCENTRIC KNEE JOINT
Harry E. Campbell, 15902 Parthenia, Sepulveda, Calif. 91343
Filed Sept. 23, 1976, Ser. No. 725,862
Int. Cl.² A61F *1/04, 1/08*
U.S. Cl. 3—26 **10 Claims**

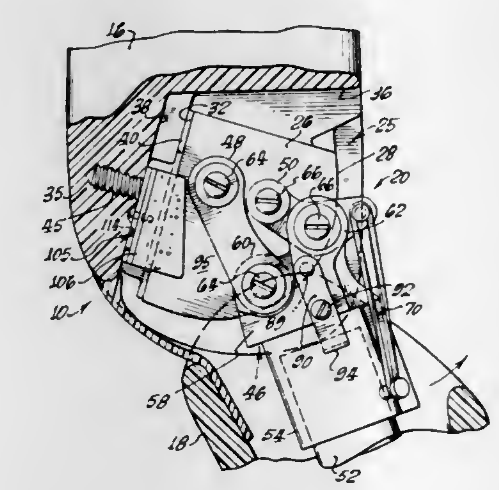

1. An artificial polycentric knee-joint mechanism interconnecting an upper stump-receiving socket member and a lower swingable shank member defining a prosthetic leg member, wherein the knee joint comprises:
a substantially stationary mounting block secured to the upper socket member, forming a transverse link member;
a support carriage secured to the lower shank member, defining a second link member;
pivot means interconnecting said mounting block to said support carriage comprising:
a first substantially vertical linkage bar positioned forward on said block and said carriage;
a second substantially vertical linkage bar juxtapositioned aft of said first linkage bar, allowing geniculation between the stump receiving socket and the swingable shank member;
biasing means connected between said second linkage bar and said support carriage;
braking means supported in said carriage for engagement with said mounting block, whereby the swing action of the shank member is controlled thereby; and
shock absorbing means arranged to engage said first linkage bar when said shank member swingably returns to a fully extended position.

4,064,570
COMPACT SHOWER STRUCTURE
Sunyong P. Kim, 3805 S. Norton Ave., Los Angeles, Calif. 90008
Filed Apr. 26, 1976, Ser. No. 680,422
Int. Cl.² A47K *3/23*
U.S. Cl. 4—147 **5 Claims**

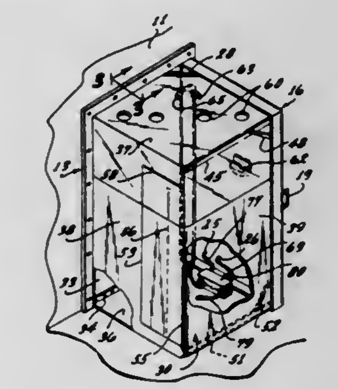

1. A compact shower structure comprising:
a rectangular flat frame attached to a wall;
a door having a recessed rear surface and hinged at one side thereof to a side of said frame such that the door can be swung to a closed position in which it fits in the opening provided by said frame;
a flexible wall structure capable of forming two adjacent sides and the bottom of a rectangular enclosure;
said flexible wall structure having portions thereof connected to the periphery of said frame and said door and having other portions thereof collapsed in the recess of said door when in its closed position in said frame;
said door when opened so as to be normal to said frame forming with the portion of said wall within said frame two adjacent sides of said rectangular enclosure;
a pair of arms pivotally connected to the respective upper and lower corners of the door which arms when disposed horizontally serve to extend the flexible wall structure to form the remaining two adjacent sides and the bottom of said rectangular enclosure; and
a shower head mounted in said structure.

4,064,571
POOL LINER RETAINER
Frank T. Phipps, Georgetown, Canada, assignor to Timerax Holdings Ltd., Georgetown, Canada
Filed Sept. 13, 1976, Ser. No. 722,992
Int. Cl.² E04H *3/16*
U.S. Cl. 4—172.19 **16 Claims**

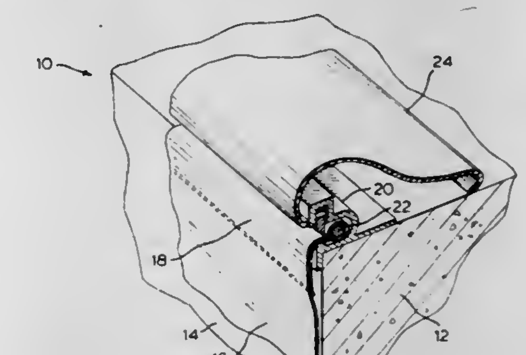

1. A holding assembly for a pool liner retainer system, comprising:
an elongated member defining first and second U-shaped channels; the first channel being adapted to accomodate a pool liner bead and having an elongated extended portion; the second channel being located adjacent to the first channel so that the opening of the second channel faces said extended portion;
a sliding insert adapted to be slidably located in the second

channel to retractably project from the second channel toward said extended portion and said insert having a lower portion defining means whereby upon engagement of said means by a liner bead said insert retracts into said second channel; and

means for biasing the sliding insert toward said extended portion, so that a liner bead located in the first channel is held in position by the projecting sliding insert.

4,064,572

LEVEL ACTUATED APPARATUS FOR DELIVERING CHEMICALS

Moye Wicks, III; Hans E. Kubitschek, and William E. King, all of Houston, Tex., assignors to Shell Oil Company, Houston, Tex.

Filed May 19, 1976, Ser. No. 687,833

Int. Cl.² E03D *9/03*

U.S. Cl. 4—227 **7 Claims**

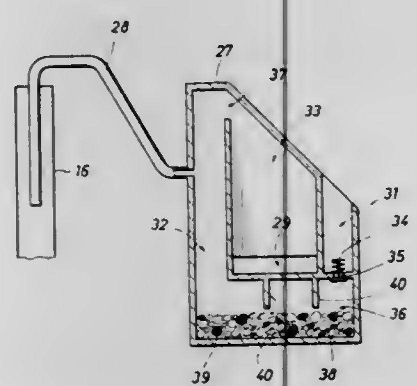

1. An apparatus for delivering measured amounts of chemical solution upon actuation of a cycling fluid level which comprises:

a. a solids chamber adapted to contain solid soluble chemicals or a mixture of solid soluble chemicals and ballast material,

b. a refill chamber having an open top end situated above the top of said solids chamber,

c. first means for providing fluid communication between said refill chamber and said solids chamber which permits fluid flow from said refill chamber into said solids chamber and which prevents reverse fluid flow from said solids chamber into said refill chamber,

d. a discharge chamber extending above the top of said solids chamber,

e. second means for providing fluid communication between said discharge chamber and said solids chamber,

f. a pump chamber having an open bottom portion and a top portion extending above the top of said solids chamber,

g. third means for providing fluid communication between the top of said pump chamber and the top of said discharge chamber,

h. a siphon tube having an inlet end into said discharge chamber at a point between said second and third means, having a portion of said siphon tube extending above the inlet and having an outlet end located below the inlet end.

4,064,573

CLEANSER-SANITIZER AND TIMED CYCLE DEODORIZING SPRAY ATTACHMENT FOR TOILETS

Joseph F. Calderone, Scottsdale, Ariz., assignor to Cahill, Sutton & Thomas, Phoenix, Ariz.

Continuation-in-part of Ser. No. 582,739, July 2, 1975, abandoned. This application Nov. 8, 1976, Ser. No. 739,549

Int. Cl.² E03D *9/02*

U.S. Cl. 4—227 **8 Claims**

1. In an apparatus located within the flush tank of a toilet for dispensing a measured amount of aerosol deodorant spray into the atmosphere surrounding the toilet and including: a pressurized spray can containing liquid deodorant and having a normally closed, tilt-actuated atomizing valve, a tube disposed within the can for delivering liquid deodorant to the valve, a sphere disposed within the tube and translatable thereinalong for a limited distance from a retainer through the tube to the valve; the improvement comprising in combination:

a. valve actuating means for exerting a tilting force on the valve sufficient to actuate the valve, said valve actuating means comprising

i. a receptacle displaceable upwardly and downwardly in response to changes in the water level in the flush tank;

ii. lever means coupled to said receptacle and to said valve for actuating said valve when said receptacle moves downwardly and for converting the force derived from the downward movement of said receptacle to a tilting force for actuating the valve, said lever means including guide means in contact with the outer surface of the can

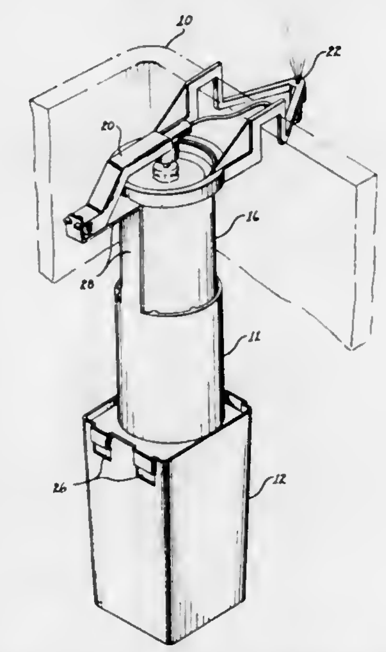

for vertically aligning said receptacle with the outer surface of said can during the upward and downward displacement of said receptacle;

b. a seat disposed at the lower portion of the valve for seating the sphere and, upon upward flow of deodorant through the tube causing corresponding movement of the sphere from the retainer to said seat, terminating the flow of the liquid deodorant into the valve;

c. conduit means for transporting the aerosol deodorant spray from the valve into the atmosphere surrounding the toilet; whereby, the act of flushing the toilet causes the receptacle to be displaced downwardly to operate said valve actuating means and to dispense a measured amount of deodorant spray into the atmosphere surrounding the toilet.

4,064,574

STRETCHER

Alois Schnitzler, Friesdorfer Strasse 43, D-5300 Bonn, Germany

Filed Nov. 6, 1975, Ser. No. 629,395

Claims priority, application Germany, Nov. 9, 1974, 2453246; Feb. 18, 1975, 2506816; Feb. 4, 1975, 2505444; Sept. 30, 1975, 2543473

Int. Cl.² A47B *83/04*

U.S. Cl. 5—82 R **23 Claims**

1. A stretcher having a pair of transversely-spaced, longitudinally-extending side struts with head and foot ends, each strut having an upper surface and portions therebelow, a cover surface stretched over and between said struts, and a plurality of strap means selectively extendable over said cover surface, wherein:

each of said strap means is retained at a first end thereof to one of said struts via a spring-biased rotatable shaft in a roll-up device and has a free end opposite said first end;

said roll-up device being affixed to said portions of said one strut below said upper surface thereof ; and

each said rotatable shaft carries thereon a pawl wheel having teeth means engageable by a locking lever, said lever being biased out of engagement with said pawl wheel and being selectively positioned by an attendant to said

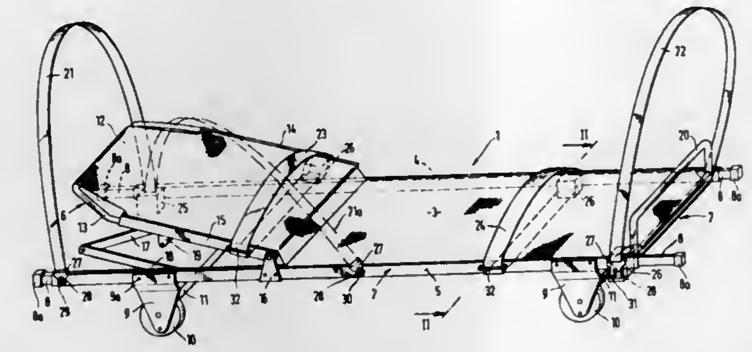

stretcher to permit and substantially prevent said wheel and shaft from rotating and to fix a strap length adjustment.

4,064,575

BED SIDE RAILING

Antonius Hermanus Sanders, Loosdrechtseweg 38, Hilversum, Netherlands

Filed Apr. 21, 1976, Ser. No. 678,882

Claims priority, application Netherlands, Feb. 19, 1976, 7601661

Int. Cl.² A47C *21/00*

U.S. Cl. 5—331 **6 Claims**

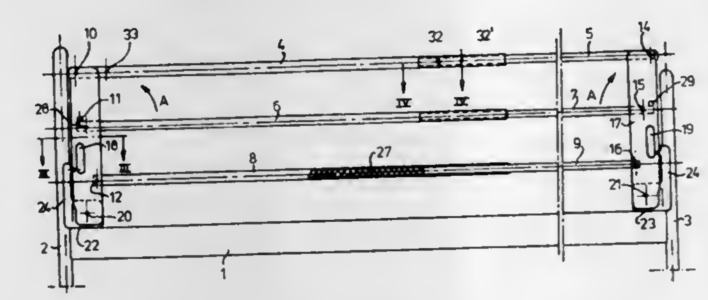

1. A side railing for a bed comprising:

a plurality of relatively overlying beams extending in the direction of length of the bed;

side supports;

pivotal shafts coupling said beams with said side supports, said pivotal shafts extending transverse to the longitudinal direction of said beams, each of said beams being formed from two telescopic, relatively slidable portions;

at least one spring disposed in said beams and tending to urge the two beam portions away from one another;

coupling members for coupling the side railing with a bed, said coupling members being provided with profiled parts adapted to grip partially around parts of a head and foot frame respectively of a bed; and

shafts parallel to said pivotal shafts for connecting one end of each of said side supports to a respective one of said coupling members, said coupling members being held in place on said head and foot frame by the action of said spring.

4,064,576

COMBINED BABY BOTTLE HOLDER AND MATTRESS COVER

Grace J. Threatt, Rte. 1 Box 17104, Colonial Heights, Va. 23834

Filed Feb. 9, 1977, Ser. No. 767,101

Int. Cl.² A47G *9/00;* **A47D** *15/00*

U.S. Cl. 5—334 C **3 Claims**

1. A holder for a baby bottle comprising a pouch-like structure adapted to snugly fit over the end section of a mattress, said holder being fabricated of soft, absorbent fabric and comprising a generally rectangular face portion, a rear portion, top portion and two opposed side portions, said face portion being provided with at least two pockets each capable of snugly accomodating a baby bottle, the openings of said pockets being spaced apart in opposed relationship about a vertical line of symmetry of said holder, each pocket containing therein a wedge member capable of elevating the bottom of a baby bottle so that the front of said bottle is angled downwardly

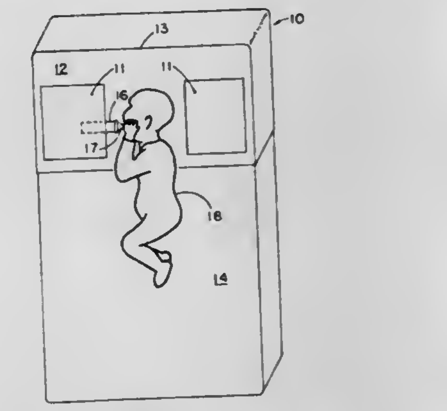

toward said line of symmetry, said rear portion containing tensioning means operative to draw said holder structure tightly against a mattress which may be disposed within the pouch-like interior of said holder.

4,064,577

BEDDING DRAW SHEET

Ronald D. Walters, Oklahoma City, Okla., assignor to Hygeia Corporation, Oklahoma City, Okla.

Continuation of Ser. No. 651,643, Jan. 23, 1976, Pat. No. 4,021,870. This application Nov. 24, 1976, Ser. No. 744,709

Int. Cl.² A47G *9/00;* **A61G** *7/06*

U.S. Cl. 5—334 R **2 Claims**

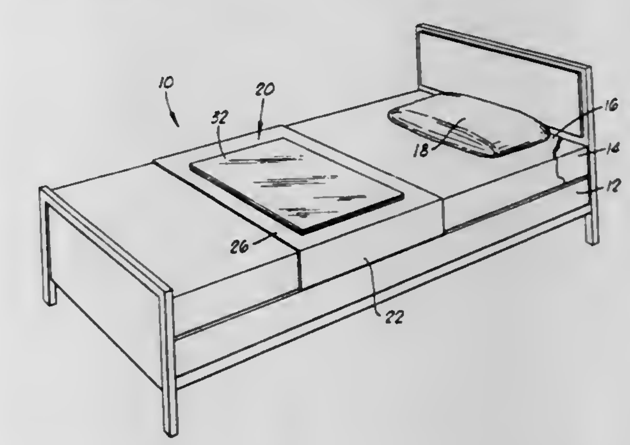

1. An improved draw sheet for bedding which comprises:

a base sheet formed of textile material;

a panel bonded to said base sheet formed of a fine weave textile material having a thread count in the range of from about 264 threads per inch to about 280 threads per inch whereby said panel, because of said fine weave has water penetration-resistant characteristics;

a water-absorbent pad positioned adjacent to said panel; and

means for removably attaching said water-absorbent pad connected to said water-resistant panel and to said pad.

4,064,578

THERAPEUTIC CUSHION

Junji Yamada, 1-11, 2-chome, Higashinihonbashi, Chuo, Tokyo, Japan

Filed Nov. 24, 1975, Ser. No. 634,510

Claims priority, application Japan, June 15, 1975, 50-75116

Int. Cl.² A47C *7/20*

U.S. Cl. 5—355 **17 Claims**

1. A therapeutic seat cushion for use with a chair which comprises:

a sponge mat layer comprising a polymeric foam including first and second surfaces;

said first surface contains a plurality of projections which extend from the first surface of the sponge mat layer;

said second surface being substantially flat; and
a slider layer comprising a fibrous material positioned adjacent to the substantially flat second surface and being readily shiftable relative to said sponge mat layer;
whereby when a force is applied to said seat cushion by a

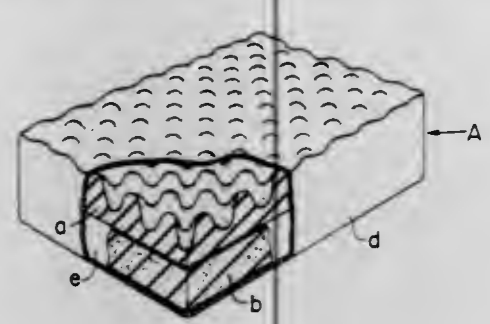

person positioned on said seat cushion, the relative positioning of the person and the sponge mat layer remains substantially constant relative to each other but shiftable relative to the slider layer thereby facilitating ready and comfortable movement of said person disposed on said seat cushion.

4,064,579
WATERBED MATTRESS WITH INFLATABLE MARGINS
Howard Allyn Winther, Santa Clara, Calif., assignor to Liberty Vinyl Corporation, Santa Clara, Calif.
Filed Aug. 11, 1976, Ser. No. 713,563
Int. Cl.² A67C *27/08*
U.S. Cl. 5—371 8 Claims

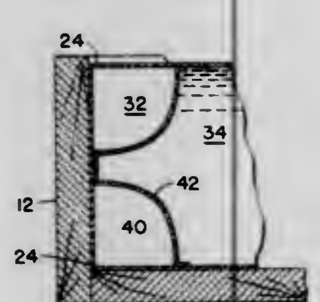

1. In a waterbed mattress including a bladder formed of pliant sheet material defining a top panel, a bottom panel, and side panels joining said top and bottom panels at upper peripheral margins and lower peripheral margins respectively, said side panels being adapted to conform to a rigid, circumscribing peripheral framework preventing lateral distortion thereof, the improvement comprising: at least one supplemental panel of a pliant sheet material which internally spans said upper peripheral margins, sealably separating said bladder into a main chamber for containing a liquid and at least one upper corner chamber for containing a selected fluid, the spanning dimension of said supplemental panel approximating the length of the hypotenuse of a triangle whose legs are formed by the portions of said top panel and said adjacent side panel forming said upper corner chamber whereby said at least one upper corner chamber establishes the structural rigidity of said upper peripheral margins.

4,064,580
MULTI-POSITION MULTI-PURPOSE SUPPORT AND STORAGE STRUCTURE
Levi Ike Ezekoye, P.O. Box 8611, Pittsburgh, Pa. 15221
Filed Oct. 13, 1976, Ser. No. 731,921
Int. Cl.² A47C *7/02, 22/00*
U.S. Cl. 5—327 B 3 Claims

1. A multi-purpose, multi-position support structure comprising an essential planar rigid support member, first and second planar base assemblies rigid with said main support member, said first and second base assemblies being disposed at first and second different angles with respect to said main support member and adapted to provide stable support for said main support at different angles with respect to a supporting

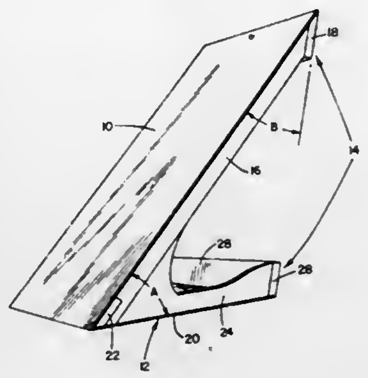

surface, said second angle being larger than said first angle and being not greater than 45° and the sum of said first and second angles being not greater than 80°.

4,064,581
WIRE STRIP, WRAP AND UNWRAP TOOL
Marvin Kober, Spring Valley, N.Y., assignor to O.K. Machine and Tool Corporation, New York, N.Y.
Filed Apr. 23, 1976, Ser. No. 679,519
Int. Cl.² H02G *1/12*
U.S. Cl. 7—14.1 R 9 Claims

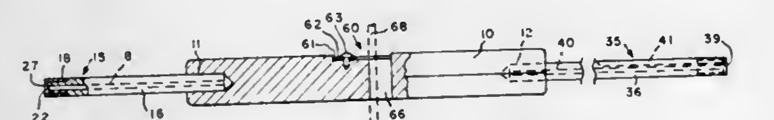

1. A tool for stripping insulation from a wire end, for making a wrapped wire connection to an electrical terminal, and for unwrapping a wrapped wire connection, comprising a handle portion, a wrapping bit extending from one end of the handle and comprising an elongated shaft provided at one end with a recessed structure including an end face having a central terminal-receiving bore and, offset and spaced from the bore, means providing a hole substantially parallel to the bore for receiving the straight wire end and further including means providing a single wall extending completely across said end face and having a wire-engaging surface extending in a plane which is substantially parallel to but offset from the shaft axis and adjacent the bore edge, an unwrapping bit extending from the opposite end of the handle and comprising an elongated shaft provided at one end with a recessed structure having a central terminal-receiving bore dimensioned to receive the bare terminal but not a wire-wrapped terminal and, adjacent said bore, structure providing a knife edge extending transversely completely across the shaft end and adapted to fit under the first wrapped wire coil and engage with a surface thereof the adjacent coil surface for unwrapping the coil upon rotation of the tool, said knife edge surface being oriented substantially parallel to the orientation of the said adjacent facing surface of the coil end, and stripper means for removing insulation from electrical wire and comprising opposed insulation-cutting edges forming a stripping slot dimensioned to receive the bare wire but cut through any insulation thereon, said handle having a through-aperture therein located between the wrapping bit and unwrapping bit, said stripper means being mounted on said handle over the through-aperture such that a wire when positioned in the stripper slot will extend through the handle aperture.

4,064,582
PRESSURE SEALING METHOD
Yoshikazu Sando, and Hiroshi Ishidoshiro, both of Wakayama, Japan, assignors to Sando Iron Works Co., Ltd., Japan
Filed Feb. 18, 1976, Ser. No. 658,876
Claims priority, application Japan, Mar. 11, 1975, 50-29235; Mar. 11, 1975, 50-29236
Int. Cl.² D06B *23/18*
U.S. Cl. 8—149.3 2 Claims

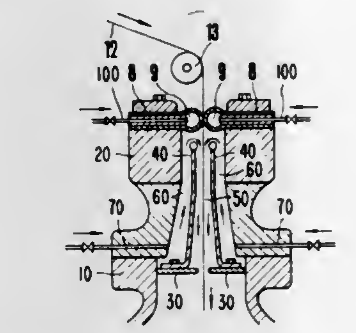

1. A method of pressure sealing at least one of the inlet into and outlet from the pressure chamber in a high pressure steamer in which a cloth material is processed, comprising the steps of forming a pair of oppositely disposed closed hollow structures having resilient contacting surfaces with the contacting surfaces arranged to provide one of an inlet into or outlet from the pressure chamber of the high pressure steamer, passing a cloth material between the resilient contacting surfaces of the hollow structure, supplying pressurized air into the hollow structures and adjusting the air pressure in accordance with the thickness of the cloth material being processed for providing the desired nipping pressure therebetween, forming a passageway extending inwardly into the steamer from the hollow structures into the pressure chamber, partitioning the passageway into a central cloth passage flanked on both sides by air pressure passages with the air pressure passages disposed in communication with the cloth passage adjacent the hollow structures, supplying pressurized air into the air passages at a location remote from the hollow structures with the pressure of the pressurized air supplied corresponding to the internal pressure in the pressure chamber of the high pressure steamer so that the pressurized air flows first through the air passages toward the hollow structures where it reverses direction entering into the cloth passage and then passes from the cloth passage into the pressure chamber.

4,064,583
PROCESS FOR THE CONTINUOUS WET TREATMENT OF TEXTILES IN ROPE FORM
Hans-Ulrich von der Eltz, Frankfurt am Main, Germany, assignor to Hoechst Aktiengesellschaft, Frankfurt am Main, Germany
Filed Aug. 20, 1976, Ser. No. 716,276
Claims priority, application Germany, Aug. 23, 1975, 2537589
Int. Cl.² D06B *3/24*
U.S. Cl. 8—149.1 5 Claims

1. A process for the continuous wet treatment of a fibrous textile web in which the textile material is to be impregnated in a pressure container under high temperature conditions with a liquor containing a treating agent and thereafter the treating agent is fixed onto the fibers of the material during a dwelling operation, said process comprising the steps of impregnating said textile web in said pressure container in its open width form while in a dry state with said treating agent liquor, thereafter forming said web into a rope and further soaking the rope in the pressure container in said treating liquor; thence withdrawing said rope from said pressure chamber through at least two successive chambers through at least two successive locks, each containing a successively lower pressure than said pressure container, into a dwelling chamber under atmospheric pressure, returning said textile web from its rope form to its open width form in said dwelling chamber while fixing the treating agent on the open form web.

4,064,584
UPPER BOAT DECK
James Harold Funkhouser, 933 Avenue H, Fort Madison, Iowa 52627
Filed Sept. 13, 1976, Ser. No. 722,781
Int. Cl.² B63B *3/48*
U.S. Cl. 9—1.1 10 Claims

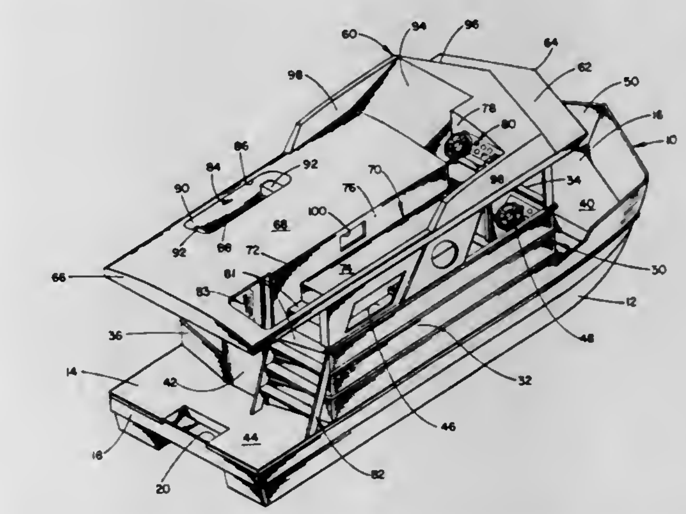

1. A boat having a hull, a lower deck supported on said hull, a cabin provided on said lower deck, and an upper deck disposed in a spaced generally parallel relationship with said lower deck, said upper deck projecting beyond the ends of and providing a cover for said cabin, said upper deck comprising an intergral one piece structure characterized by
A. a substantially planar upper surface,
B. a recessed walkway in and extending longitudinally substantially the length of said upper surface along one side thereof, a major portion of said walkway being of generally uniform width of no less than about 12 inches and substantially narrower than the width of said upper surface, said walkway being defined by
i. an elongate aperture formed in and extending longitudinally substantially the length of said upper surface,
ii. a planar lower surface disposed between about 12 and about 20 inches below and in a generally parallel relationship with said upper surface, and
iii. side surfaces integral with and connectively supporting said upper and lower surfaces,
C. said lower surface being shorter in length than said aperture and defining adjacent the stern end thereof rearwardly of said cabin an opening through said upper deck to provide access between said lower deck and said walkway, and
D. means provided externally of said cabin for assisting one to climb between said lower and upper decks through said access opening.

4,064,585
THREAD CUTTING MACHINE
Wilhelm Loos, Plettenberg, Germany, assignor to Loos & Schmidt Wilhelm Loos GmbH, Plettenberg, Germany
Filed Oct. 7, 1976, Ser. No. 730,520
Claims priority, application Germany, Oct. 11, 1975, 2545623
Int. Cl.² B23G *1/20, 11/00*
U.S. Cl. 10—130 WH 15 Claims

1. In an automatic thread cutter for nuts and similar mass-produced parts where the nuts or the like are taken from a magazine and moved through a feed trough into a guide where they are held secured against rotation and are then pushed by means of a pusher over a rotating thread cutter from where they are subsequently removed while the pusher is returned to its starting position, the improvement comprising:
a. a pressure medium operated double acting actuating cylin-

der including first and second displacement chambers and a piston separating said chambers and being slidably received therein;

b. a piston rod affixed to said piston and projecting from said cylinder and carrying said pusher;

c. a pressure medium supply means including a conduit circuit coupled to said first and second displacement chambers and pressurizing means connected in said conduit circuit for maintaining said pressure medium under pressure;

d. a solenoid valve connected in said conduit circuit for controlling the admission of the pressure medium into at least one of said displacement chambers, said solenoid valve having an energized state effecting a greater pressure in said first displacement chamber than in said second displacement chamber for displacing said piston, said piston rod and said pusher in a first direction; said solenoid valve having a de-energized state effecting a greater pressure in said second displacement chamber than in said first displacement chamber for displacing said piston, said piston rod and said pusher in a second direction which is opposite said first direction; said pusher performing its work during the course of its movement in one of said directions and performing its return motion to its starting position during the course of its movement in the other of said directions;

e. electric circuit means connected to said solenoid valve for placing the same alternatingly in said energized and de-energized states, said electric circuit including

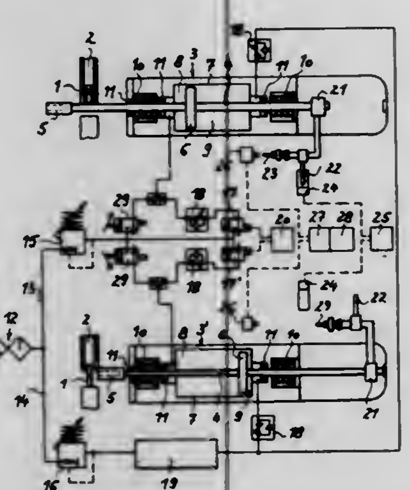

1. a settable pulse generating means for controlling, dependent upon its setting, the length of the alternating energized and de-energized states; and

2. drive means for driving said thread cutter;

f. a first electric safety means having

1. a first control switch formed of a first stationary switching member and a first movable switching member cooperating with said first stationary switching member and attached to said piston rod for moving in unison therewith; said first control switch emitting a first pulse in response to a predetermined position of said first movable switching member relative to said first stationary switching member in the course of travel of said piston rod in its normal, predetermined path;

2. a first settable time-delay relay connected to said first control switch for receiving said first pulse from said first control switch; said first settable time-delay relay being connected to said electric circuit means for applying a second pulse to said electric circuit means solely in the absence of said first pulse within a predetermined period set at said first time-delay relay; said second pulse de-energizing said electric circuit means for switching off said drive means; and

g. a second electric safety means having

1. a second control switch formed of a second stationary switching member and a second movable switching member cooperating with said second stationary switching member and attached to said piston rod for moving in unison therewith; said second control switch emitting a third pulse in response to a predetermined position of said second movable switching member relative to said second stationary switching member in the course of travel of said piston rod beyond its normal predetermined path;

2. a storage relay operatively connected to said second control switch for receiving and counting third pulses emitted by said second control switch; and

3. a second settable time-delay relay connected to said storage relay and said electric circuit means for applying a fourth pulse to said electric circuit means solely in the presence of a predetermined count of said third pulses in said storage relay within a predetermined period set at said second time-delay relay; said fourth pulse de-energizing said electric circuit means for switching off said drive means.

4,064,586

FILTER SYSTEM FOR SWIMMING POOL CLEANING MACHINES

Marshall J. Caron, Boca Raton, Fla., assignor to Florida Machine of Boca Raton, Boca Raton, Fla.

Filed Feb. 2, 1976, Ser. No. 654,568

Int. Cl.² E04H *3/20*

U.S. Cl. 15—1.7 9 Claims

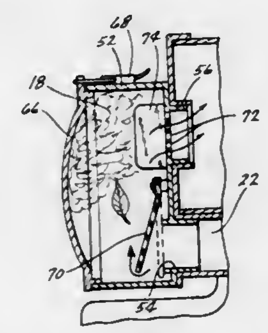

1. In combination with a submergible swimming pool cleaner having a water and debris inlet and a water discharge conduit adjacent the rearward end thereof,

a debris trap having rearward, forward, upper and lower ends,

said trap having an inlet end at its lower forward end which is in communication with the water discharge conduit, said trap having an outlet end adjacent its upper forward end,

a transversely extending filter tank cover secured to said cleaner, said cover having rearward and forward sides, upper and lower ends and opposite ends, said cover having a water discharge opening formed therein which is in communication with the debris trap discharge conduit, said cover having a pair of laterally spaced discharge openings formed therein,

a pair of spaced-apart and forwardly extending filter tanks having filters positioned therein, said tanks having water inlet openings formed therein which are in communication with the tank cover water discharge opening,

said tanks having rearward discharge ends secured to the forward side of said cover which are in communication with the cover discharge openings,

water deflector means on the rearward side of said cover adjacent said discharge openings for deflecting the discharging water in an upwardly direction,

and trap means in said debris trap for preventing larger particles of debris from passing from said debris trap into said filter tanks while permitting smaller particles of debris to enter said filter tanks.

4,064,587

BROOM CONSTRUCTION

Martin Schnabl, c/o John Eppler Machine Works, Inc., 9150 State Road, Philadelphia, Pa. 19136

Filed July 6, 1976, Ser. No. 702,977

Int. Cl.² A46B *3/00;* B25G *1/10*

U.S. Cl. 15—175 4 Claims

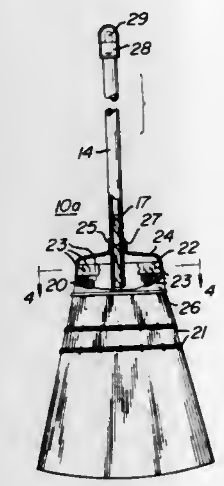

1. A broom comprising

a handle which includes

a convolute round paper tube having the turns thereof adhesively secured together,

a wooden plug adhesively held in engagement within one end of said tube for broom head attachment to the tube and plug,

a cap at the opposite end of the tube from the plug and closing said opposite end, and

a broom head secured to said tube and said plug by a fastener engaging the head and handle and extending into the plug.

4,064,588

TILE GROUT-CLEANING TOOL

Jack B. Cooper, 4312 W. Main St., Skokie, Ill. 60076

Filed Apr. 29, 1976, Ser. No. 681,704

Int. Cl.² A47L *13/08*

U.S. Cl. 15—236 R 1 Claim

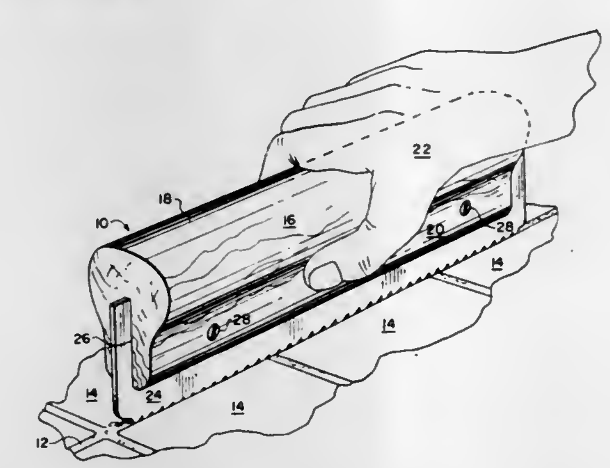

1. A hand tool for cleaning substantially straight lines of grout between rectangular tiles affixed to a wall surface, said tool comprising:

an elongate handle of generally constant dimensioned pear-shaped cross section having a larger dimension end and a smaller dimension opposite end adapted to be grasped by said larger dimension end for manually reciprocating said tool in the lengthwise direction, said opposite end having a longitudinal slot extending at least halfway through said handle and extending the entire length thereof and opening to the marginal edge of said opposite end to bifurcate the same, a pair of holes extending transversely through said smaller dimension opposite end, spaced apart one toward each side end of said handle;

blade means having fine teeth along one edge thereof for reciprocating along the length of said edge in said lines of grout to clean said grout, said blade means is a thin rigid substantially rectangular member secured in said slot with said teeth protruding from said slot along substantially the entire length of said slot, approximately three-fourths of the depth of said member positioned in said slot, said edge having said teeth is substantially straight and said member protrudes from each side end of said handle, said teeth being selectively spaced and dimensioned and having a gauge selected to allow said teeth and member to be engaged along the length thereof with said lines of grout between said tiles to remove grout particles of fine mesh size for cleaning the lines of grout when said tool is reciprocated without impairing the function of the grout between said tiles, and said member including a pair of perforations spaced apart such that each one aligns with one of said holes when said blade means is inserted in said slot; and

securing means extending through each of said holes and said aligned perforations through said handle in said smaller dimension opposite end removably and rigidly clamping said blade means between said bifurcated opposite end.

4,064,589

DOOR CLOSER

Thomas M. Bejarano, Hacienda Heights, Calif.; Herbert Schmidt, Sauerlandst, Germany, and Joseph J. Schmidt, Torrance, Calif., assignors to Builders Brass Works, Los Angeles, Calif.

Filed Mar. 18, 1976, Ser. No. 668,228

Int. Cl.² E05F *3/22*

U.S. Cl. 16—53 19 Claims

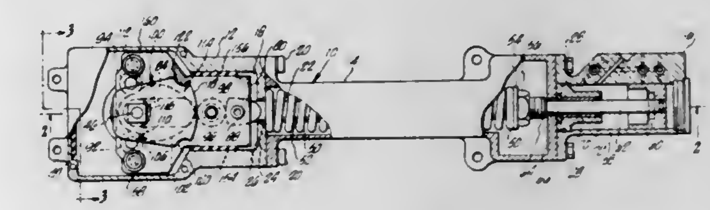

1. A door closer comprising a housing, a spindle member rotatably mounted in said housing for securing said closer to a door, a cylinder formed interiorly of said housing, a piston operable in said housing, means interconnecting said piston and said spindle member for movement of said piston upon rotation of said spindle member, and means for independently regulating the rate of closing and back checking the opening and latching of the door, said means including a plurality of valve means communicating with said cylinder for permitting a restricted flow of fluid about said piston as said piston reciprocates within said cylinder in response to the opening and closing of said door and means corresponding to the positioning of said piston within said cylinder for varying said restricted flow to correspondingly vary the rate of travel of said piston, said restricted flow varying means being operable at both ends of said cylinder and therebetween.

4,064,590

TOP GUIDE PIVOT FOR BIFOLD DOORS

Lester L. Smith, 5151 Mission Hill Drive, Tucson, Ariz.

Filed July 2, 1976, Ser. No. 702,225

Int. Cl.² E05D *13/02*

U.S. Cl. 16—90 6 Claims

1. In a bifolding door installation having a pair of rectangular shaped door panels hingedly interjoined at adjacently opposed first lateral edges thereof and vertically mounted in a door opening for horizontal folding movements thereacross, a first panel thereof being supported adjacent its second lateral edge for pivotal movement about a vertical axis and the second panel thereof being guided adjacent its second lateral edge for movement along an elongated guide track mounted across the

upper end of the door opening and characterized by a channel opening along the underside thereof, a top guide assembly for coupling the second panel to the guide track comprising: a generally cylindrical housing insertable in a mounting socket therefor extending inwardly of the top edge of the second panel and adjacently parallel with the second lateral edge thereof, a plunger extending axially outwardly of one end of said housing, a platform portion affixed to and extending laterally from the outer end of said plunger, and track engagable

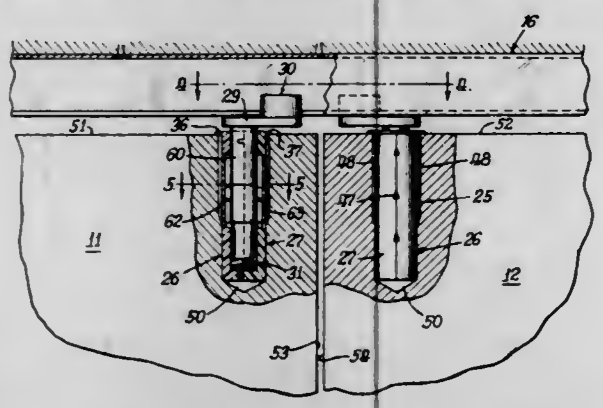

guide means projecting from said platform portion in spaced parallelism with said plunger and housing; the assembly being operationally associated with said second panel to maintain said guide means substantially opposite the intersection of said top and second lateral edges thereof and oriented for entry into the channel opening of the guide track whereby to maintain said second lateral edge of said second panel aligned beneath said channel opening throughout opening and closing movements of the pair of panels.

4,064,591

LIFTING MECHANISM FOR SLIDING DOORS

John W. Hutchison, Crown Point, Ind., assignor to Pullman Incorporated, Chicago, Ill.

Division of Ser. No. 599,791, July 28, 1975, Pat. No. 3,988,801. This application July 9, 1976, Ser. No. 703,861

Int. Cl.[2] E05D *13/00*

U.S. Cl. 16—99 **6 Claims**

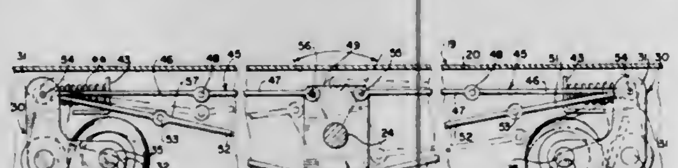

1. A sliding door including a vertical door panel, a track positioned below said door for slideably supporting the same, the improvement of a door lifting mechanism comprising;

a pair of bell crank levers each including a horizontally disposed arm and a vertically disposed arm,

means pivotally supporting said bell crank levers on said panel in horizontally spaced relation,

a roller journalled on each of said horizontal arms,

a shaft rotatably supported on said panel between said levers,

a pair of pull type linkage arrangements each pivotally connected to a respective vertical arm of a respective lever, each linkage arrangement having independent upper and lower sections,

each of said upper and lower link sections comprising a plurality of pivotally interconnected link portions to define a flexible link to accommodate pulling action and eliminate pushing action, and

a vertically extending rockable member connected to said shaft and having upper and lower portions connected respectively to said upper and lower sections of each of said linkage arrangements and exerting pull forces on said linkage arrangement for pivoting said bell crank levers during rotation of said shaft to pivot said rollers into and out of lifting engagement relative to said track.

4,064,592

RETAINER FOR SLIDING DOORS AND THE LIKE

Harry M. Riegelman, Fullerton, and Vernon Edwin Madison, Orange, both of Calif., assignors to Rusco Industries, Inc., Fullerton, Calif.

Filed May 19, 1976, Ser. No. 688,050

Int. Cl.[2] E05D *13/02*

U.S. Cl. 16—100 **1 Claim**

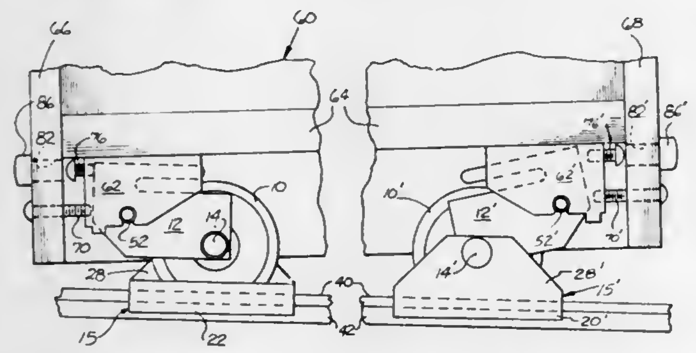

1. In a sliding door construction operable along a floor mounted track having shoulders on both sides thereof, wherein a bracket is secured to the bottom of the door at each end, retainer means for each end of the door comprising:

a wheel engaging the top of the track and having an axial pin;

an elongated door clip pivotally mounted adjacent one one of its ends to said axial pin and pivotally supported at its other end by the bracket;

and a track clip including a channel substantially longer than the diameter of said wheel,

said channel having a web between parallel sides, said sides having inturned flanges,

said channel having an elongated opening in its web surrounding the portion of the wheel engaging the track,

a vertical plate extension from one of said sides, the upper edge of said extension being substantially shorter than the diameter of said wheel, said extension being pivotally mounted on said axial pin, said channel sides being spring-like to permit said flanges to be spread to straddle the track and snap into engagement with the shoulders thereof,

whereby said track clip can remain clipped to the track to keep the wheel engaging the track when the door clip pivots to accommodate vertical movement of the door which makes the bottom of the door non-parallel to the track.

4,064,593

SLIDING DOOR ROLLER ASSEMBLY

B. J. Helmick, 303 Deborah Court, Upland, Calif. 91786

Filed Nov. 1, 1976, Ser. No. 737,475

Int. Cl.[2] A47H *15/00;* E05D *13/02*

U.S. Cl. 16—105 **6 Claims**

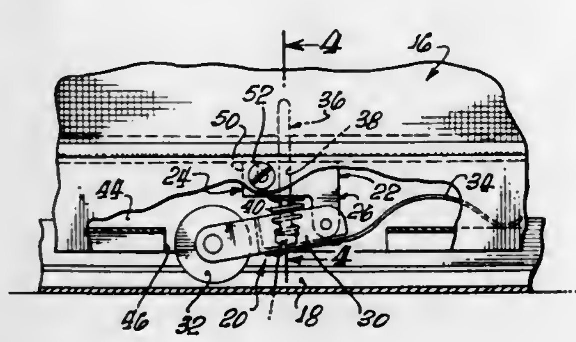

1. A supporting roller assembly for a sliding door comprising:

a mounting bracket,

a roller carrier,

a peripherally grooved roller on said carrier,

means mounting said carrier on said bracket for normally generally vertical movement of said carrier relative to said bracket,

a limit stop plunger vertically movable in said bracket and engageable with said carrier to limit upward movement of said carrier relative to said bracket,

a spring for urging said plunger toward said carrier to urge said carrier downwardly,

said bracket comprising a pair of resilient clamp arms straddling said plunger, and

a clamp screw joining said arms for drawing said arms together to firmly clamp said plunger in fixed position relative to said bracket.

4,064,594

TOOL BOX HANDLE

Joseph A. Teti, Jr., Merion, and Peter A. Peroni, Pottstown, both of Pa., assignors to LaFrance Precision Casting Company, Philadelphia, Pa.

Filed Nov. 11, 1976, Ser. No. 740,976

Int. Cl.[2] A47B *95/02*

U.S. Cl. 16—125 **41 Claims**

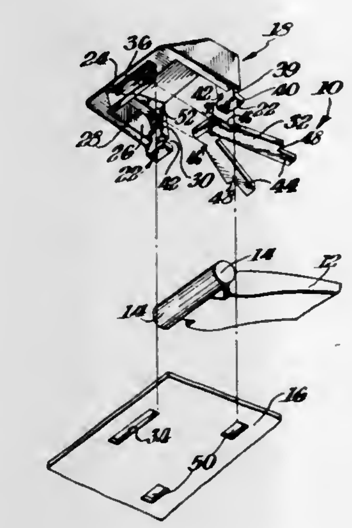

1. A handle for mounting on a panel of a tool box or the like comprising an elongated strap, a pair of lugs at each end of said strap, said lugs in each pair being aligned with each other and extending outwardly from each strap perpendicularly thereto, an end cover for each end of said strap, said end covers being identical with each other, each of said end covers forming a housing with the panel into which a respective pair of said lugs is captured, said housings being open at their ends facing each other and being otherwise closed, keepers formed on each of said end covers for facilitating securement thereto to the panel, a pair of opposed lug nests in opposite sides of said housing parallel to said strap, the sides of said lug nests being spaced apart a distance slightly larger than the distance from the end of one of said lugs to end of the other of said lugs of each of said pair of lugs whereby said lugs may slide in said lug nests, each of said lug nests having an upper wall and having a front wall at said open end of its respective of said end covers, said upper wall and said front wall comprising abutments in the path of inward sliding motion of said lugs to prevent further inward sliding motion of said lugs, and said end covers being of thickened construction in portions thereof in said path of inward sliding motion of said lugs to provide greater load carrying capability of said handle.

4,064,595

METAL DOOR AND HINGE CONSTRUCTION

John Y. McLeish Leaver, Quincy, Ill., assignor to The Knapheide Manufacturing Co., Quincy, Ill.

Filed Sept. 7, 1976, Ser. No. 720,646

Int. Cl.[2] E05D *5/02, 5/06*

U.S. Cl. 16—128 R **4 Claims**

1. Combination hinge and weather shield construction for use in securing a door to a body, the latter presenting an opening to be closed by the door, and in preventing moisture and dirt from entering the opening, said construction comprising:

a first planar section adapted to be secured to said body outside of said opening and extending along the body for a distance in a direction away from said opening, said first section being characterized by a plurality of first land portions along its length;

a first barrel mounting section extending transversely away from the body and being coupled with said first planar section at the end of the latter removed from said opening;

a plurality of first hinge barrels disposed in spaced apart relationship along said first barrel mounting section;

a second planar section adapted to be secured to said door and extending outside of said opening along the body for a distance in a direction away from said opening, said second section being characterized by a plurality of second cutaway portions separated by a plurality of second

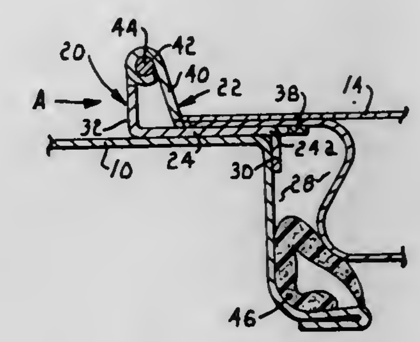

land portions, both of said second cutaway and land portions extending along said body,

said second cutaway portions and said second land portions being complemental to said first cutaway portions and said first land portions whereby said cutaway portions on one section receive the land portions of the other section;

a second barrel mounting section extending transversely away from the door and being coupled with said second planar section at the end of the latter removed from said opening;

a plurality of second hinge barrels disposed in spaced apart relationship along said second barrel mounting section; and

a hinge pin received by said first and second hinge barrels.

4,064,596

APPARATUS FOR PROCESSING POULTRY

Edward J. Crane, Ottumwa, Iowa, assignor to Barker International, Inc., Marietta, Ga.

Filed Mar. 3, 1976, Ser. No. 663,304

Int. Cl.[2] A22C *21/02*

U.S. Cl. 17—11.1 R **22 Claims**

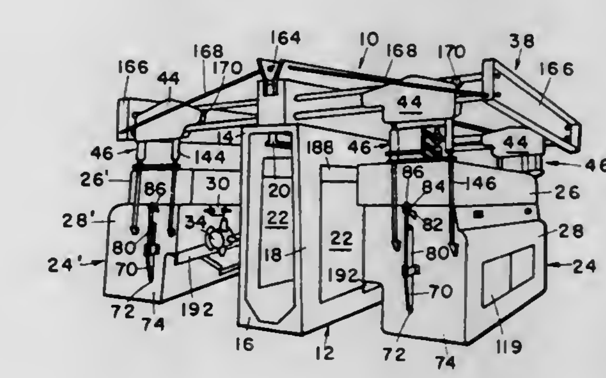

1. Apparatus for picking fowls as they are conveyed along a predetermined path of travel comprising:

means forming an elongated enclosure through which the fowls are conveyed during the picking operation, said enclosure being opened at the ends thereof to allow the passage of fowls therethrough and having openings formed in the sides thereof;

a pair of opposed picking assemlies positionable at the sides of said enclosure to extend into said openings, said picking assemblies each including a plurality of finger elements adapted to engage the fowls to remove the feathers therefrom;

an overhead supporting framework extending transversely to said elongated enclosure generally perpendicular to the sides thereof; and

carriage means mounting said picking assemblies on said supporting framework for movement toward and away from said enclosure means, said picking assemblies when moved toward said enclosure means extending through said side openings into cooperative operative picking positions and when moved in a second position along said supporting framework providing access to the interior of said enclosure and said picking assemblies.

4,064,597

PREVENTION OF FIBERS FROM ENTERING THE PINCH POINT BETWEEN A ROTATING FEED ROLL AND A STATIONARY SHOE

Rashmikant Maganlal Contractor; William Carter Dodson, Jr., both of Wilmington, Del.; James John Hentges, Hendersonville, Tenn., and Earl Edwin Seppala, New Castle, Del., assignors to E. I. Du Pont de Nemours and Company, Wilmington, Del.

Filed Oct. 14, 1976, Ser. No. 732,484

Int. Cl.² D04H *1/00*

U.S. Cl. 19—156.3 **8 Claims**

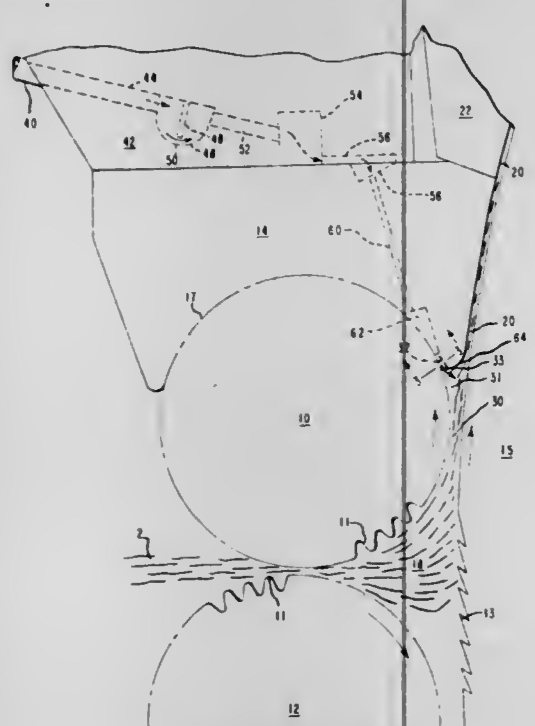

1. In the process of feeding a batt of staple fibers against the surface of a rotating toothed roll for dispersion of said fibers from said batt, said feeding including passing said dispersion of fibers through the point of closest clearance between said rotating toothed roll and a feed roll rotating in the opposite direction to the toothed roll, said feed roll riding in a stationary shoe spaced from the surface of said rotating toothed roll to permit the dispersion of fibers to follow the surface of said rotating toothed roll to be formed into a web of lesser area weight than that of said batt, said feed roll forming a pinch point with said shoe downstream of said point of closest clearance, the improvement comprising preventing said dispersion of fibers from following the surface of said feed roll to enter said pinch point, by contacting the surface of said feed roll with a gaseous fluid flowing out of said pinch point, the flow of gaseous fluid being of low volume so as not to disturb the uniformity of said dispersion of fibers on the surface of said rotating toothed roll.

4,064,598

TAKER-IN-PART OF THE CONVENTIONAL FLAT CARD

Takashi Katoh, Kariya, and Susumu Otani, Aichi, both of Japan, assignors to Kabushiki Kaisha Toyoda Jidoshokki Seisakusho, Japan

Continuation of Ser. No. 580,788, May 27, 1975, abandoned, which is a continuation-in-part of Ser. No. 421,662, Dec. 4, 1973, abandoned, which is a continuation-in-part of Ser. No. 296,214, Oct. 10, 1972, abandoned, which is a continuation of Ser. No. 37,182, May 14, 1970, abandoned. This application Jan. 28, 1976, Ser. No. 652,992

Claims priority, application Japan, May 20, 1969, 44-46567; Oct. 22, 1969, 44-100332

Int. Cl.² D01G *15/40, 15/82*

U.S. Cl. 19—105 **6 Claims**

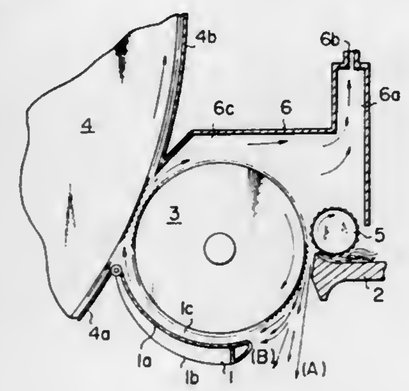

1. In the method for effectively removing impurities such as trash particles and short fibers from useful cotton fibers wherein a conventional flat card is provided with a main cylinder and a revolving flats turnably mounted on an upper cylindrical portion of said cylinder, the method comprising rotating a taker-in roller disposed at a position adjacent to said main cylinder, and feeding fibers to said taker-in roller; the improvement comprising providing a smooth unapertured taker-in undercasing at a position adjacent the underside of said taker-in rollers that a free space is formed below said taker-in roller between the position at which fibers are fed to the taker-in roller and the front edge of said taker-in undercasing, the rear edge of said taker-in undercasing extending adjacent the position where said taker-in roller most closely approaches said main cylinder, and providing a taker-in cover at a position above said taker-in roller, with the distance between said cover and said taker-in roller being substantially greater than the distance between said undercasing and said taker-in roller except in the region most closely adjacent said main cylinder, said method further comprising rotating said taker-in roller at a speed of at least 600 rpm, whereby an accompanying air stream is created at a position outside of cylindrical surface of said taker-in roller by said rotation of said taker-in roller, and the centrifugal force of said trash particles is sufficiently strong to mainly separate them from said accompanying air stream at said free space below said taker-in roller, said accompanying air stream thereby carrying primarily useful fibers and short fibers through the space between said taker-in roller and said taker-in undercasing, forming a combined airstream by said accompanying air stream of said taker-in roller with an accompanying air stream formed around said main cylinder so that said useful fibers are mainly transmitted from said accompanying air stream of said taker-in roller to said main cylinder, creating an offset air stream from said combined air stream at a position adjacent and above said position at which said taker-in roller most closely approaches said main cylinder by sucking air from between said cover and taker-in roller so that said short fibers contained in said accompanying air stream of said taker-in roller are mainly introduced into the space above said taker-in roller and consequently said short fibers are separated from said useful fibers transmitted to said main cylinder, said step of suctioning air comprising sucking air from the space above said taker-in roller so that creation of strong eddy current at a position adjacent and above said feeding position is prevented, whereby said introduced short fibers are effectively discharged from said space above said taker-in roller by said step of sucking air and further comprising the step of setting the front edge of said taker-in undercasing to be close to said taker-in roll than the rear edge thereof, whereby eddy currents are reduced and the quantity of trash particles passing in the space between said taker-in roller and taker-in undercasing is minimized.

4,064,599

FIBERIZING METHOD AND APPARATUS EMPLOYING DIFFERENTIAL FEED SYSTEM

Rudolf Neuenschwander, Swarthmore, Pa., assignor to Scott Paper Company, Philadelphia, Pa.

Filed June 13, 1975, Ser. No. 586,606

Int. Cl.² D01G *23/00*

U.S. Cl. 19—96 **11 Claims**

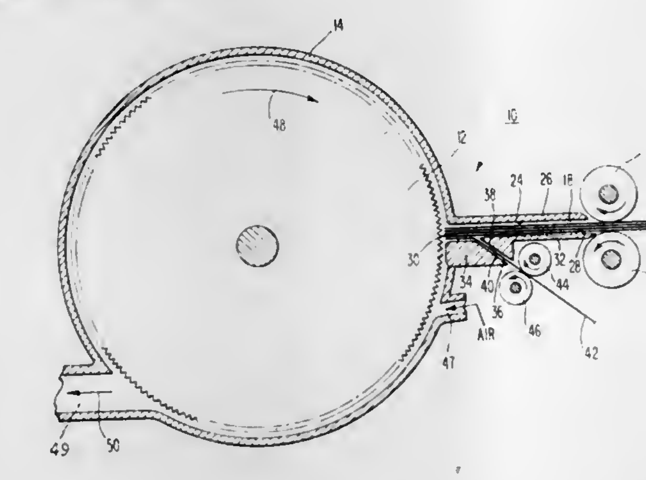

1. A method for separating fibers from a stack of fibrous sheets by directing the stack of sheets into engagement with a rotating fiberizing means; the improvement comprising the steps of directing a first stack of sheets at a first speed in a downstream direction into engagement with said fiberizing means and directing at least one additional sheet at a second speed different from said first speed into engagement with the bottom of said first stack upstream of the fiberizing means and then, as part of said stack, into engagement with said fiberizing means.

4,064,600

METHOD FOR FORMING FIBROUS STRUCTURES

Joel Peter Gotchel, Glen Mills, Pa.; Henry James Norton, Wilmington, Del., and Aris C. Spengos, Wallingford, Pa., assignors to Scott Paper Company, Philadelphia, Pa.

Filed Aug. 17, 1976, Ser. No. 715,138

Int. Cl.² D04H *1/00*

U.S. Cl. 19—156.3 **11 Claims**

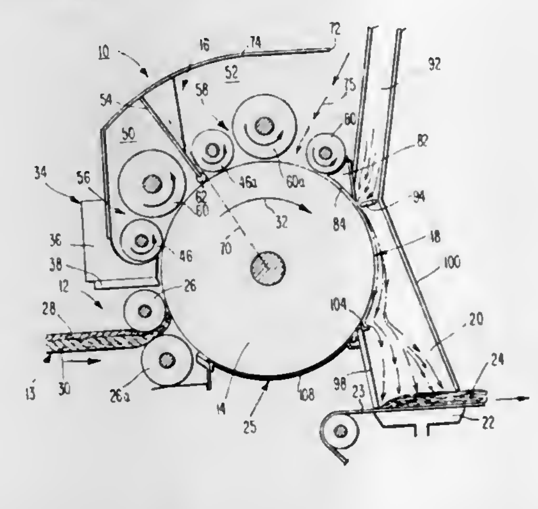

1. A method for forming a fibrous structure from a fibrous feed that includes textile-length fibers over one-fourth inch in length, said method including the steps of:

A. rotating a drum having projections on its outer periphery;

B. directing the fibrous feed into engagement with the rotating outer periphery of the drum, whereby rotation of the drum past the fibrous feed separates fibers from said feed;

C. directing separated fibers to a release zone on the drum at which the separated fibers are released from the periphery of said drum for subsequent conveyance to a foraminous forming surface upon which the fibrous structure is formed, said separated fibers being directed to the release zone by rotation of the drum; and

D. sealing the outer periphery of the drum in a region between the fiber release zone and the section in which the fibrous feed is directed into engagement with the periphery of said drum, the sealing of said drum being carried out by;

1. directing a gas against the outer periphery of the drum with a force component in a direction opposed to the direction of rotation of the drum, said gas being directed through the outlet of a nozzle at a static pressure of at least about two atmospheres to provide a gas velocity which is sufficiently high to remove air trapped between the projections of the drum as said drum is being rotated, and
2. providing a seal pad in engagement with the outer periphery of the drum, said seal pad being spaced, in the direction of rotation of said drum, from the region on the outer periphery of the drum against which the gas is impinged, said seal pad aiding in preventing the loss of textile-length fibers from the process.

4,064,601

WELL LINE STRAP CONNECTION

Tosh Miyagishima, Simi Valley, Calif., assignor to Hydril Company, Los Angeles, Calif.

Filed Feb. 23, 1976, Ser. No. 660,440

Int. Cl.² B65D *63/00*

U.S. Cl. 24—16 PB **13 Claims**

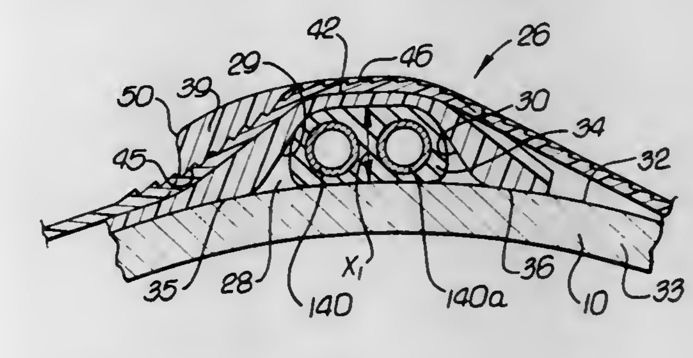

1. In a coupling,

a. a lengthwise directionally elongated flexible strap, and

b. a keeper connected to the strap,

c. the keeper having a recess at the innerside thereof and extending through the keeper in a transverse direction relative to the length direction of the strap,

d. the keeper having a transverse cross-piece and a through socket to pass the free end of the strap, the socket defined in part by the cross-piece, the keeper also having a first ramp surface underlying the cross-piece and a crest surface outwardly exposed beyond the cross-piece in said lengthwise direction, and

e. there being means carried by the coupling proximate the socket to positively interlock the strap to the keeper in response to feeding of the strap through the socket, said interlock means including ratchet interlocking elements on the cross-piece and on the outerside of the strap,

f. the keeper having a second ramp surface, said two ramp surfaces respectively located opposite the opposite sides of the recess and said crest surface overlying the center portion of the recess.

4,064,602
WARP-KNIT SLIDE FASTENER STRINGER HALF AND METHOD OF MAKING SAME
Helmut Heimberger, Locarno, Switzerland, assignor to Optilon W. Erich Heilmann GmbH, Cham, Switzerland
Filed Sept. 30, 1976, Ser. No. 728,032
Claims priority, application Germany, Apr. 7, 1976, 2614932
Int. Cl.² A44B *19/00*
U.S. Cl. 24—205.1 C **11 Claims**

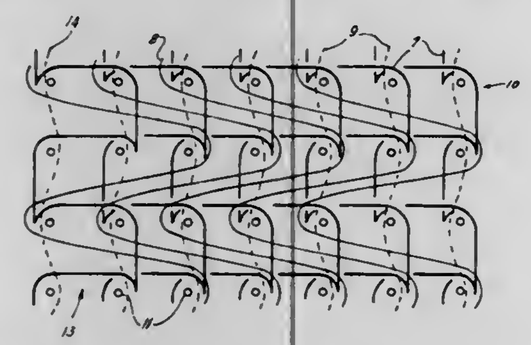

1. A slide-fastener stringer half comprising:
an elongated warp-knitted tape having a pair of opposite longitudinally extending edges and a pair of opposite faces and formed with a plurality of longitudinally extending parallel wales, said tape being knit exclusively with
a plurality of warp yarns each forming a respective longitudinally extending warp loop chain extending transversely over two respective wales with the warp loop chains each overlapping an adjacent warp loop chain at a common wale,
a first group of weft yarns laid into and each extending over three of said wales, and
a second group of weft yarns each laid into only one of said wales;
a continuous monofilamentary coupling element having a succession of turns and lying on one face of said tape along one edge thereof; and
stitching overlying said turns, extending through said tape, and having a needle thread on the other face of said tape between two of said wales at said edge.

4,064,603
SAFETY BELT BUCKLE
Louis Romanzi, Jr., Milford, Mich., assignor to Gateway Industries, Inc., Chicago, Ill.
Filed Sept. 29, 1976, Ser. No. 727,181
Int. Cl.² A44B *11/26*
U.S. Cl. 24—230 A **20 Claims**

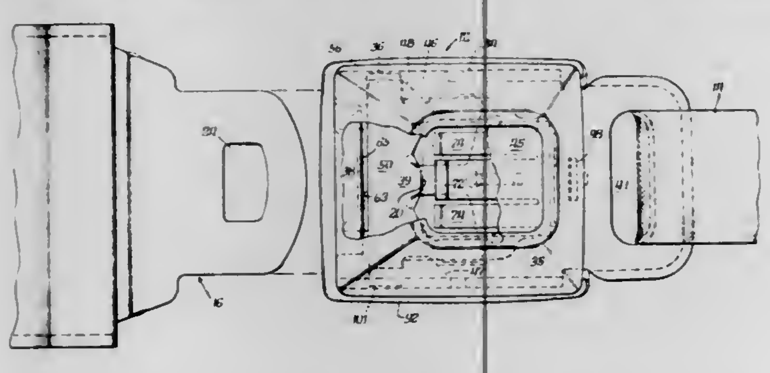

1. In a safety belt buckle having a channel-shaped buckle body having a base and a pair of upstanding walls connected to opposite sides of said base for pivotally receiving opposite pivot arms on a latch lever for pivotally mounting the latch lever for pivoting by a push-button means against the biasing force of a spring means urging the latching lever upwardly to its latching position, the improvement for reducing the height and length of the buckle body comprising pivot arm receiving openings in said upstanding sidewalls at locations at substantially the plane of the buckle base of said channel-shaped buckle body for receiving said pivot arms and for locating said pivot axis adjacent said base web, openings in said buckle base allowing portions of said latch lever to pivot downwardly into said openings when said latch lever is operated by said push button means, and a cover means attached to said channel-shaped base member and extending across said openings in said buckle base and covering the latter and said portions of said latch lever.

4,064,604
SWIVELS
George F. Hartman, 1415 Larkwood Drive, Austin, Tex. 78723
Filed Aug. 24, 1976, Ser. No. 717,290
Int. Cl.² A44B *13/02;* A01K *91/04*
U.S. Cl. 24—236 **11 Claims**

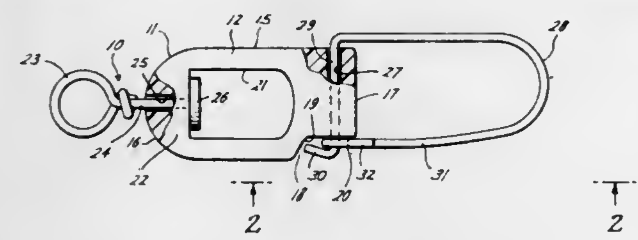

1. A snap swivel comprising
a body of thermoplastic composition including opposing broad flat faces terminating laterally in flat edges,
an opening in one end of said body,
an attaching eye having a shank portion rotatably mounted within said opening,
said shank having a head on the end thereof remote from the eye presenting a bearing surface for engagement with the body adjacent said opening,
a transversely extending bore in proximity to the rear end of said body,
a recess in the rearmost portion of one of said edges,
a clasp freely pivoted to said body,
said clasp including a transversely extending section carried in said bore and terminating outwardly in a inwardly inclined leg adapted to at least partially lie in said recess, and a resilient arm including a hook adapted to engage said leg when said clasp is turned perpendicularly upward with respect to the longitudinal axis of said body.

4,064,605
METHOD FOR PRODUCING NON-WOVEN WEBS
Takashi Akiyama; Akinori Tanji; Hideo Ikeda, and Seiichi Asano, all of Otsu, Japan, assignors to Toyobo Co., Ltd., Osaka, Japan
Filed Aug. 26, 1976, Ser. No. 717,927
Claims priority, application Japan, Aug. 28, 1975, 50-104800; Oct. 31, 1975, 50-131657
Int. Cl.² D04H *3/02;* D02J *1/22*
U.S. Cl. 28—103 **5 Claims**

1. A method for producing a non-woven web by drafting with the use of an air-jet type drafting device wherein a number of filaments which are fed from a filament source are blasted onto the face of a moving collector, said method comprising passing the filaments through a filament guide passage provided on the drafting device, said filament guide passage having a narrow rectangular cross section and supplying air through holes or slits provided on at least one side of the

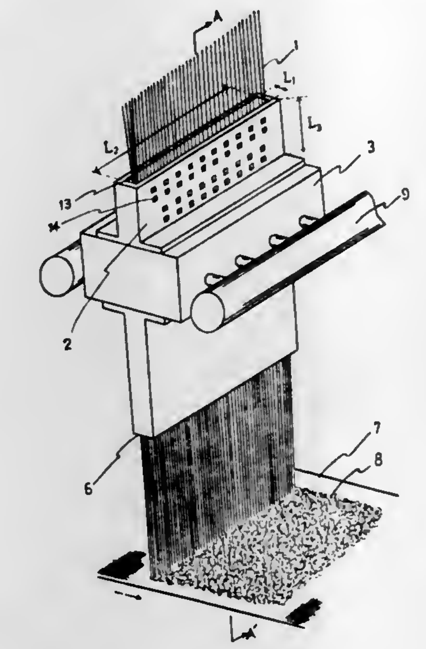

filament guide passage, whereby the distribution of the filaments is regulated with said air stream.

4,064,606
METHOD FOR MAKING MULTI-LAYER CAPACITORS
William M. Dunn, Philadelphia, Pa., assignor to TRW Inc., Cleveland, Ohio
Filed July 14, 1975, Ser. No. 595,890
Int. Cl.² H01G *4/06*
U.S. Cl. 29—25.42 **7 Claims**

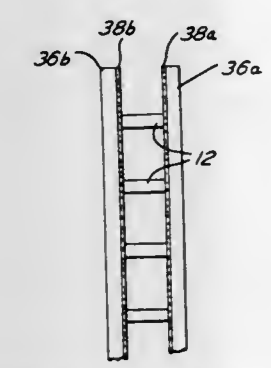

1. A method of making a multi-layer capacitor comprising the steps of:
a. forming a plurality of bodies of substantially final length and width with each body having alternate layers of a dielectric material and a conductive material with each conductive layer being sandwiched between a pair of dielectric layers and with some of said conductive layers extending to one end of said body but being spaced from the opposite end of the body, and the other of said conductive layers extending to the said opposite end of the body but being spaced from the said one end of the body;
b. mounting said bodies in spaced, substantially parallel relation on a thin support sheet having a layer of adhesive on one surface with one end of each of said bodies contacting and adhering to the adhesive layer;
c. encapsulating said supported bodies in a block of dissolvable material having opposed substantially flat surfaces with the bodies being in spaced parallel relation and having their ends adjacent to said flat surfaces of said block;
d. removing the support sheet and coating the ends of said bodies with a film of a conductive metal with the films contacting the conductive layers of the body which extend to the respective ends of the body; and then
e. separating the bodies from the material of the block.

4,064,607
COMPRESSION ROLLER FOR PAPER PRODUCING MACHINERY
Robert Wolf, Herbrechtingen, Germany, assignor to J. M. Voith G.m.b.H., Heidenheim (Brenz), Germany
Continuation of Ser. No. 648,770, Jan. 13, 1976, abandoned. This application Mar. 7, 1977, Ser. No. 775,222
Claims priority, application Germany, Jan. 21, 1975, 2502161
Int. Cl.² B21B *13/02*
U.S. Cl. 29—116 AD **4 Claims**

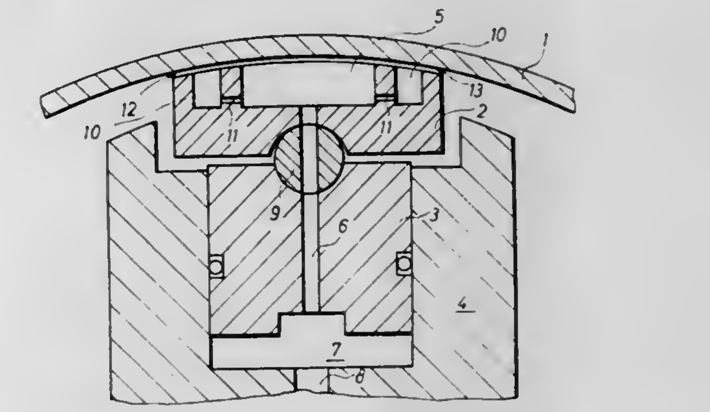

1. A compression roller, comprising:
A. a casing defined by a hollow, rotatable, substantially circular cylinder;
B. stationary support means, disposed within said casing and including:
i. cylinder means, with an internal void;
ii. piston means, partially and slidably disposed within said internal void of said cylinder means and forming therewith a pressure chamber and extending substantially over the entire length of said casing; and
iii. a support bar, carried pivotably on said piston means and extending substantially over the entire length of said casing, having an external contour substantially conforming to the inside contour of said casing, and urged by said piston under pressure against said casing, the improvement comprising said support bar being provided with a longitudinal channel-like recess in said external contour, said channel extending substantially along the entire length of said casing, said support bar and said piston also including pressure conduits, for providing substantially unrestricted fluid communication between said channel and said pressure chamber; said support bar being further provided with a plurality of recess-like pockets arranged seriatim over the entire length of said support bar and disposed in the external surface thereof on both lateral sides of said channel, and with capillary channels for providing fluid communication between said channel and each of said pockets.

4,064,608
COMPOSITE CAST IRON DRIER ROLL
Frederick T. Jaeger, Rosemere, Canada, assignor to Eutectic Corporation, Flushing, N.Y.
Filed Sept. 30, 1976, Ser. No. 728,077
Int. Cl.² B32B *15/18*
U.S. Cl. 29—132 **11 Claims**

1. A composite drier roll having a cylindrical ferrous metal surface with a primary hardfacing alloy coating mechanically and metallurgically bonded thereto,
said ferrous metal substrate having a thermal conductivity relative to silver taken as 1 as substantially ambient temperature of at least about 0.06 calories/ sq.cm/cm/° C/sec,
said primary alloy coating being a flame sprayed heat, corrosion and wear resistant iron-group metal-base alloy having a thickness ranging from about 0.01 to 0.15 inch,
said hardfacing alloy consisting essentially of a total of up to about 30% by weight of a strong boride and carbide-

forming solute metal in amounts ranging from about 5% to 25% Cr, 0 to about 15% Mo, 0 to about 15% W, up to about 3% C, about 0.5% to 5% B, about 0.5% to 6% Si and the balance essentially said iron-group metal, the amount of boron or carbon present in said alloy being sufficient to combine with a substantial amount of said refractory metal to provide a mechanically and metallurgically bonded alloy coating having a thermal conductivity at substantially ambient temperature relative to silver taken as 1 of at least about 0.05 calories/sq.cm/cm° C.sec.

4,064,609
MEMBRANE MOUNTING DEVICE
Borge Jeppesen, Glostrup, and Flemming Aas, Soborg, both of Denmark, assignors to Radiometer A/S, Denmark
Filed Oct. 19, 1976, Ser. No. 733,893
Claims priority, application Denmark, Oct. 20, 1975, 4709/75
Int. Cl.² B23P *19/02*
U.S. Cl. 29—235 **6 Claims**

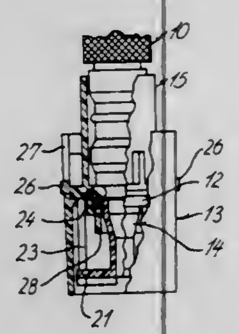

1. A mounting device for mounting a membrane or a foil in a stretched condition at one end of a rod-shaped or tubular member, such as a measuring electrode member, said mounting device comprising
a body member defining a passage therein and having first and second abutment surfaces at opposite first and second ends of said passage, respectively,
a membrane or foil arranged at said first end of the passage and extending transversely in relation thereto, said membrane being releasably retained at its rim portion,
a ring-stretching means including a radially enlarged part which is positioned at said second end of the passage and which may engage with said second abutment surface, and a part extending axially from said enlarged part through said passage, said ring-stretching means being axially displaceable in relation to said body member, and
a separate resilient mounting ring surrounding the axially extending part of said stretching means and positioned at said first end of the passage, the outer diameter of said ring exceeding the minimum diameter of the adjacent first end of said passage, whereby said ring may engage with said first abutment surface.

4,064,610
METHOD OF AND MEANS FOR FORMING FLORAL PUFFS
Julian W. Murray, 1323 Berkley, Dallas, Tex. 75224
Filed Sept. 23, 1976, Ser. No. 725,997
Int. Cl.² A41G *1/02*; B25B *25/00*
U.S. Cl. 29—243.5 **5 Claims**

1. Means for forming a puff for a floral arrangement from a flat sheet of relatively thin flexible fine mesh fabric gathered transversely at its medial portion into fluffy butterfly shape and adapted to be secured by a flexible wire of relatively small gauge looped around the gathered medial portion of the sheet and then twisted upon itself comprising
an elongate member slidably mounted for axial reciprocation,
means for imparting rotation to the elongate slidably mounted member upon relative reciprocation thereof,
means for maintaining said member in an inward retracted position and biasing said member against outward reciprocation, and
means for detachably connecting a transversely gathered medial portion of a sheet of thin flexible fine mesh fabric and a flexible wire looped therearound to the outer end of said member, whereby the looped wire is twisted upon itself to fasten said wire to the gathered sheet by rotation

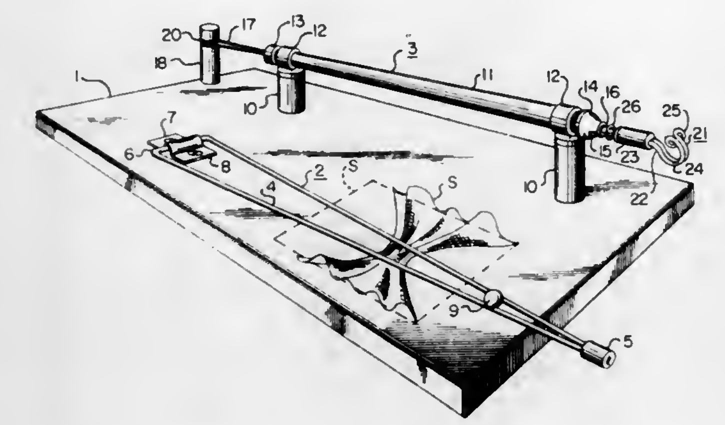

with said member when the latter is reciprocated outwardly by gripping and pulling said looped wire connected thereto outwardly,
the detachable connecting means including a flexible hook having sufficient resiliency to permit separation of the fastened wire and gathered sheet therefrom upon continued outward pulling of said wire and sheet after termination of the outward reciprocation of said member.

4,064,611
METHOD FOR TERMINATING SOLID ELECTROLYTE CAPACITORS
Theodore M. Sobozenski, Concord, N.H., and Raymond E. Stupak, Pittsfield, Mass., assignors to Sprague Electric Company, North Adams, Mass.
Filed Jan. 14, 1977, Ser. No. 759,305
Int. Cl.² B01J *17/00*
U.S. Cl. 29—270 **17 Claims**

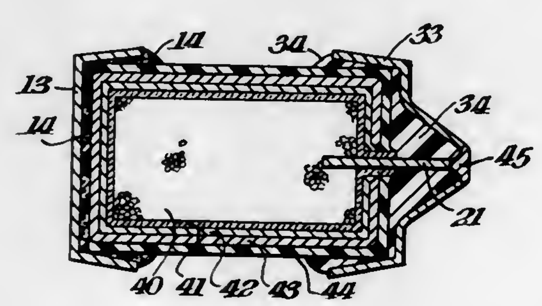

1. A method for terminating solid electrolyte capacitors including providing a plurality of solid electrolyte capacitor bodies each of said bodies having an anode wire extending from an anode end thereof, and applying an insulating coating over said anode end and the adjacent sides of said each body so that the cathode counterelectrode is exposed at the opposite and namely the cathode end of said each body, wherein the improvement comprises:
a. forming a plurality of rectangular cups of a thin metal, each of said cups having four sides and a bottom;
b. pressing a first group of said metal cups into interference fitting rectangular holes, respectively, provided therefor in a first jigging strip, said holes being in a row and spaced therein at predetermined intervals and at predetermined orientations;
c. pushing each of said cathode ends into one of said first group cups, respectively, after applying a conductive resin beween each of said cathode ends and the corresponding of said cups;
d. curing said conductive resin;

e. pressing a second group of said cups into interference fitting rectangular holes, respectively, provided therefor in a second jigging strip, said holes in said second strip being in a row and spaced therein at said predetermined intervals and predetermined orientations;
f. pushing each of said anode ends into one of said second group cups, respectively, after applying a bonding resin between each of said anode ends and the corresponding of said second group cups;
g. curing said bonding resin;
h. making an electrical connection between each of said anode wires and the corresponding of said second group cups; and
i. removing said jigging strips from said capacitor bodies.

4,064,612
LOCKING TYPE GASKET FOR SPARK PLUGS HAVING FULLY THREADED SHANKS AND TOOL THEREFOR
Harold P. Hopp, 35 Industrial Road, Lodi, N.J. 07644
Filed Oct. 26, 1976, Ser. No. 735,600
Int. Cl.² B25B *27/14*
U.S. Cl. 29—278 **2 Claims**

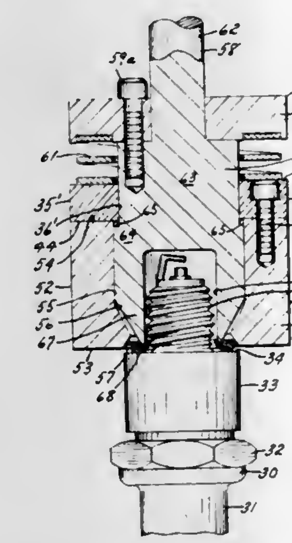

1. In a combination spark plug and captive gasket therefore, in which said spark plug includes a plug body having a threaded shank extending outwardly therefrom, said threaded shank having threads thereon extending substantially the entire lenght of said shank, said gasket including a plurality of mutually compressible sealing flanges and a locking flange extending inwardly of said sealing flanges, said threaded shank having a given pitch and defining a continuous spiral recess between adjacent convolusions of said thread, the improvement comprising: said locking flange including a plurality of locking tabs, each tab including a main body portion lying inwardly of said sealing flanges, and generally longitudinally oriented with respect to the principal axis of said threaded shank, and a transversely extending portion interconnecting said longitudinally extending main body portion to one of said sealing flanges; said tabs having an effective length along said longitudinal axis substantially equal to the combined thickness of said sealing flanges in compressed condition, and being disposed within the area encompassed by said plurality of sealing flanges, whereby said longitudinally extending portions and sealing flanges define an arcuately-shaped interstice for the insertion of a staking tool therein; said locking tabs, in installed condition overlying portions of said thread, and being deformed to a degree wherein the radially inward surfaces thereof at least partially conform to the configuration of said thread.

4,064,613
POWER STEERING PUMP BRACKET TOOL
John E. Simms, Kingsville, Md., assignor to Design & Funding, Inc., Baltimore, Md.
Filed Apr. 4, 1977, Ser. No. 784,358
Int. Cl.² B25B *23/00*
U.S. Cl. 29—407 **4 Claims**

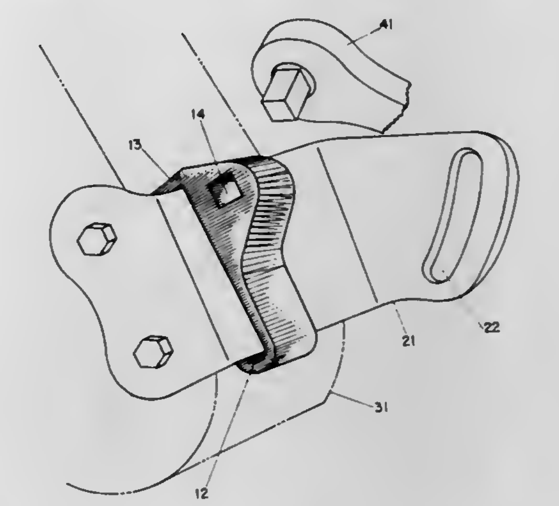

1. A tool, comprising:
a rigid body member having a flat bottom and a raised section at one end of the top of said body member; said raised section including a square opening with the bore axis perpendicular to the side plane of said rigid body member and dimensioned to accept the driving end fitting of a socket wrench tool handle;
an end stop descending from the raised section end of said body member and forming an interior 90° angle with said flat bottom; and
a 180° curved lip section on the end of said body member opposite said end stop and raised section adapted to form a U shaped channel on the bottom side of said body member with the opening facing said end stop.

4,064,614
METHOD OF MAKING AN IMPROVED HOSE AND TUBE COUPLING
Louis T. Horvath, Solon, Ohio, assignor to Samuel Moore and Company, Aurora, Ohio
Filed Dec. 23, 1976, Ser. No. 753,897
Int. Cl.² B23P *17/00*
U.S. Cl. 29—417 **21 Claims**

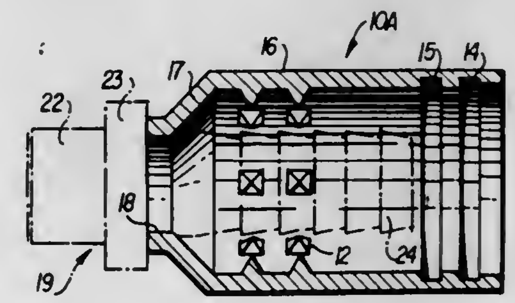

1. In a method of making an improved permanently attachable coupling member for the end of a hose or tube for use in the conveyance of fluids under pressure, said coupling member comprising a body member comprised of a coupling attachment means end, a nipple extending from said attachment means end, an external annular protruding member and external recessed securement means disposed intermediate said attachment means end and said nipple, a shell member disposed concentrically about the nipple and secured at one end thereof to the body member, the method including the steps of:
a. Forming a plurality of longitudinally extending circumferentially spaced ribs on the inner wall of an elongate mem-

ber having a longitudinal central axis therethrough, said ribs extending inwardly towards the said central longitudinal axis from a base thereof integral with the inner wall of the said elongate member;

b. Providing a length of the elongate member suitable for use as a shell for the coupling member;

c. Inserting a shaped forming tool into the formed elongate member and removing a portion of the ribs by rotational means so as to provide an elongate member defining an intermediate portion, a first portion axially extending from an end of the intermediate portion to a first end thereof, and a second portion axially extending from the opposite end of the intermediate portion to a second end thereof, said intermediate portion having disposed on the inner wall thereof, a plurality of solid, substantially symmetrical, three-dimensional circumferentially spaced barbs having a base thereof integral with the inner wall and extending radially inwardly from the base towards the central longitudinal axis of the elongate member and ending in a substantially pointed apex;

d. Forming said first portion of the elongate member into a substantially frusto-conical shape terminating at the first end of the elongate member;

e. Inserting said coupling member nipple into the elongate member from the first end thereof so that the elongate member is disposed concentrically about the nipple and said first end is axially aligned radially outwardly from the coupling body member securement means; and

f. Compressing said first end into the coupling body member securement means to provide a shell in secured relationship therewith.

4,064,615

METHOD AND DEVICE FOR DISMOUNTING OR MOUNTING JIB SECTIONS ON A TOWER CRANE

Rickard Andersson, Vasteras, Sweden, assignor to Linden-Alimak AB, Vasteras, Sweden

Filed Oct. 28, 1976, Ser. No. 736,458

Int. Cl.² B23P *19/00, 11/00*

U.S. Cl. 29—426 11 Claims

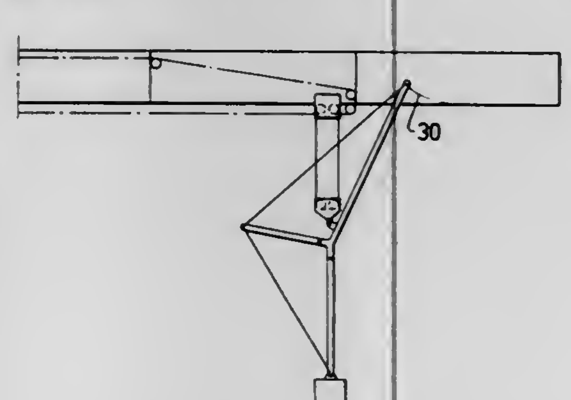

1. A method for dismounting and mounting jib sections on a tower crane having a jib, a hook, a hoisting rope and a trolley rope passing over a pulley carried by said jib section, the dismounting steps comprising connecting said hook to a carrying cradle having a counterweight on one arm of a three-armed lever frame, connecting a sheave block on another of the frame arms and hoisting said cradle, said cradle assumes a balanced position as it is hoisted with the frame arm carrying the counterweight substantially pointing in vertical downward direction, with the frame arm carrying the sheave block and intended to carry the section to be dismounted pointing upward, hoisting said cradle until said sheave block has reached a position above the lower edge of a second jib section located adjacent to said first-named jib section, disconnecting said sheave block from said cradle and connecting same to said second jib section, lowering the cradle to the ground level, moving the hoisting rope and trolley rope from the pulley on the first-named jib section to said sheave block on said second jib section, hoisting the cradle until a short frame arm of the cradle abuts the lower side of the jib and the outer end of the frame arm is on the same level as the upper edge of the first-named jib section, connecting said another frame arm to said first-named jib section, additional hoisting of the cradle lifts the first-named jib section so that the first-named jib section can be released from said second jib section, lowering of the carrying cradle with the first-named jib section during which lowering the cradle assumes a different balanced position where the short frame arm no longer abuts the lower side of the jib, but where the outer end of the another frame arm still is above the carrying cradle arm provided with the counterweight, so that the counterweight at continued lowering first establishes contact with the ground lever, and thereafter a rotation of the carrying cradle about said counterweighted end takes place until the jib section has established contact with the ground level, and the mounting steps comprising coupling the another frame arm with the jib section to be mounted, hoisting of the carrying cradle with the jib section during which hoisting the cradle assumes a balanced position where the outer end of the another frame arm is located above the counterweight, hoisting said cradle and jib section until contact of the short frame arm with the lower side of the jib is affected whereby a rotation of the cradle about this point of contact takes place until the jib section to be mounted has arrived at the necessary level, coupling the jib section with the remaining jib, releasing the carrying cradle from the jib section and lowering same while the cradle assumes a different balanced position, at which the frame arm with the counterweight substantially points vertically downward, until the carrying cradle reaches ground level, moving the hoisting rope and trolley rope from a pulley on the jib to a pulley on the jib section and that this dismounting and mounting procedure continues until the jib has obtained the desired length.

4,064,616

METHOD FOR CONSTRUCTING A BLAST FURNACE

Katsuyuki Kubota, Tokyo; Noboru Fujii; Koichi Yamada, both of Fukuoka; Kimikazu Nakamura, Tokyo, and Norihito Yuki, Chiba, all of Japan, assignors to Sankyu Inc., Fukuoka, Japan

Filed Sept. 30, 1976, Ser. No. 728,373

Claims priority, application Japan, Oct. 2, 1975, 50-119613

Int. Cl.² E04G *21/00*

U.S. Cl. 29—429 2 Claims

1. A method for constructing a blast furnace comprising the steps of:

a. constructing a foundation;

b. erecting a support column assembly for supporting a blast furnace on said foundation;

c. erecting an additional tower for blast furnace erecting and dismantling purposes on said support column assembly;

d. mounting a plurality of detachable hydraulic lifting means on said additional tower;

e. constructing a carriage having a frame structure effective to serve subsequent to erection of the furnace as a part of a furnace bottom structure;

f. providing said frame structure of said carriage with grout charging conduits for charging grout into the frame structure and with cooling pipes for cooling said furnace bottom structure;

g. assembling at a site remote from said foundation a plurality of furnace assembly blocks, said assembly blocks including a furnace top block, intermediate blocks and a furnace bottom block, and having brick lining, painting, electrical instrumentation, wiring, piping and any other necessary fittings;

h. transporting said blocks in a sequential order of assembly, proceeding from said furnace top block to said furnace bottom block, from said shop onto said foundation by said carriage;

i. lifting up said furnace top block by suitable ones of said hydraulic lifting means, and then transporting the first one of said intermediate blocks onto said foundation;

j. lifting the first one of said intermediate blocks and then joining said furnace top block with the first one of said intermediate blocks while maintaining the first one of said intermediate blocks placed on said frame structure of said carriage;

k. repeating said steps (h), (i), (j) with remaining blocks for the required number of times to lift up all the furnace blocks except the furnace bottom block by said hydraulic lifting means;

l. fixing lifting blocks on said support column assembly;

m. lifting up said furnace bottom block with said frame structure of said carriage simultaneously by suitable lifting means engaged with said frame structure of said carriage,

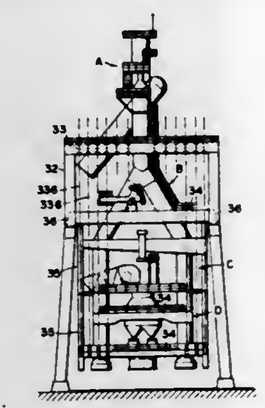

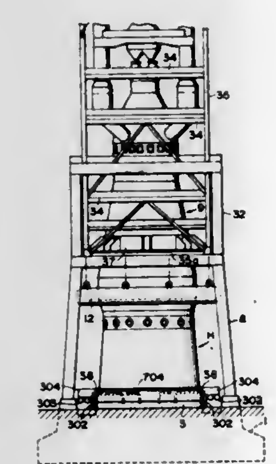

and joining said furnace bottom block with upper blocks lifted up;

n. setting a casting frame around said frame structure of said carriage in its lifted-up condition for the purpose of defining a casting space over the foundation;

o. charging grout into said casting space and into said frame structure of said carriage through said grout charging conduits thereby constructing a furnace bottom structure having cooling pipes therethrough;

p. disengaging said lifting means engaged with said frame structure of said carriage, removing said casting frame and said hydraulic lifting means after curing of said grout charged into the casting space.

4,064,617

DIE ASSEMBLY AND METHOD FOR CLINCHING FASTENERS TO PANELS

Daniel V. Oaks, Lindenhurst, Ill., assignor to MacLean-Fogg Lock Nut Company, Mundelein, Ill.

Filed Sept. 1, 1976, Ser. No. 719,803

Int. Cl.² B23P *11/00*

U.S. Cl. 29—432.1 9 Claims

1. A die assembly for clinching a fastener to a panel comprising:

a die body having an axially extending aperture and having a rim portion surrounding said aperture;

said die body including means in said aperture for deforming a fastener pilot driven therein;

said die body being subdivided into at least two segmental parts along at least one radial plane;

a die holder having an axial opening containing said die body; and

said die holder and said die body having cooperating surfaces for camming said segments toward one another in response to axial movement of said die body in said axial opening.

9. A method of clinching a pierce nut to a panel comprising: positioning a segmented die body behind the panel;

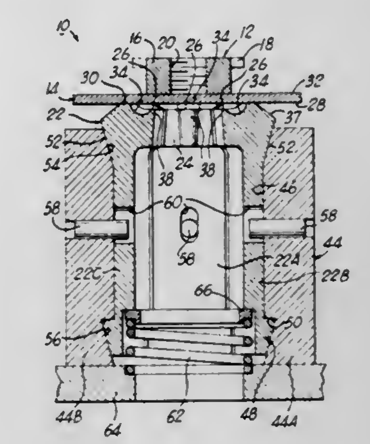

driving the pilot portion of the pierce nut through the panel and into an aperture in the die body;

forcing the die body segments radially inwardly during said driving step with a force derived from the driving force;

deforming the pilot with the die body during the driving step to form a clinch interconnection between the panel and the pierce nut;

pulling the panel and nut axially away from the die body; and

freeing the die body segments for radially outward movement during said pulling step.

4,064,618

METHOD OF POSITIONING AN EXPLOSIVE INSERT IN A VERTICAL TUBE

Emil P. Loch, Tampa, Fla., assignor to Westinghouse Electric Corporation, Pittsburgh, Pa.

Division of Ser. No. 634,000, Nov. 20, 1975, Pat. No. 4,030,419. This application Feb. 24, 1977, Ser. No. 771,609

Int. Cl.² B23P *11/02*

U.S. Cl. 29—451 5 Claims

1. A method of positioning a resilient insert for explosively expanding a tube into engagement with a tube sheet wherein said insert has a sleeve fixed to one end and said tube extends vertically upwardly from said tube sheet, said method comprising the steps of:

positioning an explosive cord within said insert so that when the insert is in the tube the explosive cord within the insert will have its inner end disposed adjacent the inner edge of the tube sheet,

bending the insert starting at a location beyond the inner end

of the explosive cord so that when released the insert has a bend set therein,

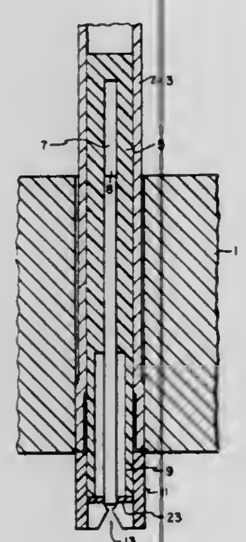

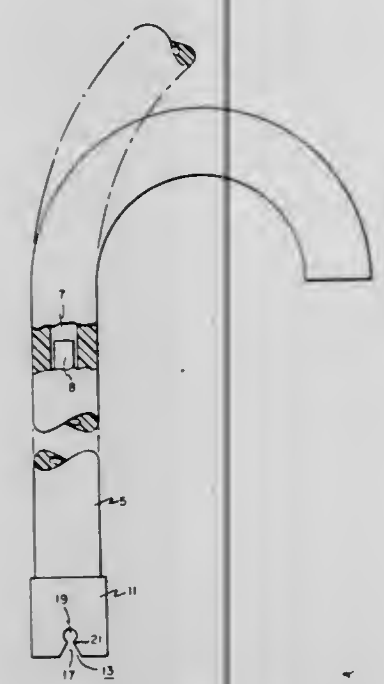

inserting the bent insert into a tube until the sleeve abuts the tube sheet, whereby the bent portion holds the insert in the vertical tube.

4,064,619

METHOD OF JOINING PLASTIC COATED PIPE

Marvin C. Echols, and David L. Graller, both of Houston, Tex., assignors to Zap-Lok Systems International, Inc., Houston, Tex.

Filed Dec. 3, 1976, Ser. No. 747,409

Int. Cl.² B23P *3/00, 25/00*

U.S. Cl. 29—458 **6 Claims**

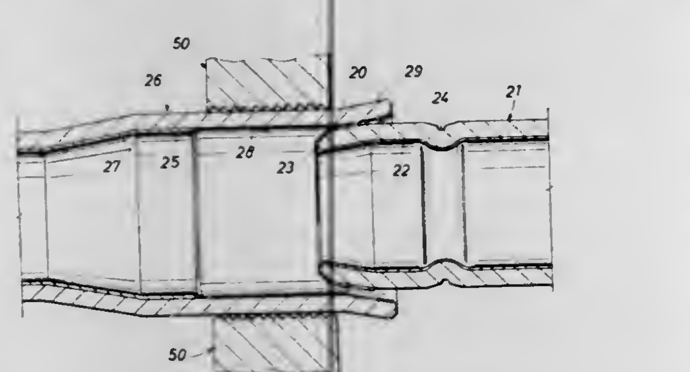

1. A method of joining interference fitted ends of tubular members wherein said members have a plastic coating on their interiors comprising

forming an enlarged bell end on one of said tubular members together with an outwardly flared end, so as to receive another tubular member;

coating the interior of the bell end into the section forming the enlarged bell end;

forming an inwardly tapered end on another tubular member for reception into said bell end;

coating the interior of the other tubular member as well as the end and the outer surface of the inwardly tapered end;

forming an annular groove in the outer surface of said other tubular member at a location where the groove lies within the bell upon insertion of the tubular member into the bell end;

applying an epoxy sealing member to said other member and inserting in interference fit said other member into said bell end until the coatings on the interior of the bell end and the exterior of outer surface are in close proximity.

4. A method of joining interference fitted ends of tubular members wherein said members has a plastic coating on their interiors comprising

forming an enlarged bell end on one of said tubular members together with an outwardly flared end so as to receive another tubular member;

coating the exterior of the bell end as well as the interior of the outwardly flared end;

forming an inwardly tapered end on another tubular member for reception into said bell end;

coating the exterior of the other tubular member to a location where it will align with the exterior coating on the bell end when the ends are coupled together,

forming an annular groove in the outer surface of said other tubular member at a location where the groove lies within the bell upon insertion of the tubular member into the bell end;

applying an epoxy sealing member to said other member and inserting in interference fit said other member into said bell end until the coatings on the interior portion of the flared end of the bell and the exterior of outer surface are in close proximity.

4,064,620

ION IMPLANTATION PROCESS FOR FABRICATING HIGH FREQUENCY AVALANCHE DEVICES

Don H. Lee, Agoura; Kenneth P. Weller, Rancho Palos Verdes; Robert S. Ying, Westminster, and William F. Thrower, Cerritos, all of Calif., assignors to Hughes Aircraft Company, Culver City, Calif.

Filed Jan. 27, 1976, Ser. No. 652,943

Int. Cl.² B01J *17/00;* H01L *21/265*

U.S. Cl. 29—580 **7 Claims**

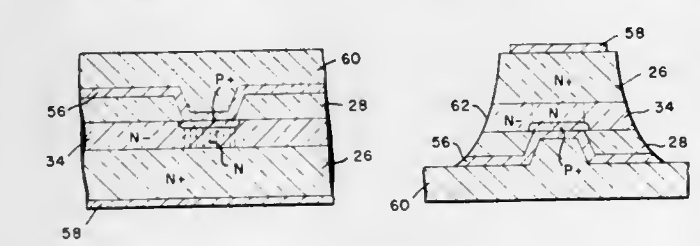

1. A planar process for fabricating high frequency impact avalache transit time (IMPATT) devices having precisely controlled parasitic loss parameters and with structural characteristics which allow direct mounting into a microwave cavity, including the steps of:

a. forming a relatively thick insulating mask on the surface of a semiconductor crystal composed of a substrate of one conductivity type and a layer of said one conductivity type disposed thereon and of higher resistivity than said substrate.

b. implanting one or more ion species of said one conductivity type through an opening in said mask and into a central region of said crystal and thru said layer to thereby leave said central region of said crystal surrounded by a higher resistivity annular region

c. implanting further ion species through said opening in said mask and into said central region of said crystal to thereby form a planar PN junction terminating beneath said mask at the surface of said crystal,

d. annealing said semiconductor crystal to a predetermined elevated temperature sufficient to remove substantial amounts of ion implantation damage in said crystal and to electrically activate the ion implanted regions thereof,

e. depositing a layer of contact metalization on said insulating mask and extending into an opening thereof and into electrical contact with said central region of said semiconductor crystal,

f. bonding a heat sink to said contact metalization whereby said heat sink is in close proximity to said central region for providing a maximum of heat transfer therefrom, and portions of said contact metalization and heat sink remote from said central region are separated from said semiconductor crystal by the thickness of said relatively thick insulating mask which minimizes the capacitance and maximizes the resistance between said semiconductor crystal and said heat sink and thus minimizes microwave losses in said devices, and

g. removing a predefined portion of a region of said semiconductor crystal surrounding said central region and also removing a predefined portion of a region of said insulating mask surrounding the contact metalization making electrical contact with said central region to further minimize microwave losses in said devices and improve the high frequency performance thereof.

4,064,621

CADMIUM DIFFUSED $Pb_{1-x}Sn_xTe$ DIODE LASER

Wayne Lo, Troy, Mich., assignor to General Motors Corporation, Detroit, Mich.

Filed Sept. 16, 1976, Ser. No. 723,803

Int. Cl.² H01L *7/00*

U.S. Cl. 29—569 L **3 Claims**

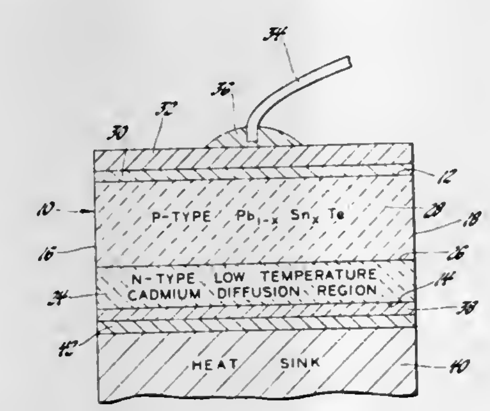

1. A method of making a higher power, more tunable lead-tin telluride infrared laser, said method comprising:

placing a body of low dislocation density monocrystalline P-type semiconductive material in a chamber to receive cadmium as a diffusant, said semiconductive material having the composition $Pb_{1-x}Sn_xTe$ with x being a value from zero to about 30 mol percent that is selected to provide a band gap corresponding to a photon of infrared radiation of a predetermined wavelength within a range of 6.5 - 32 microns;

placing in said chamber a quantity of cadmium that is equal to about 0.05 - 0.08 milligrams of cadmium per cubic centimeter of chamber volume;

closing said chamber while it is evacuated to a pressure no greater than about 1×10^{-6} Torr;

heating said chamber at a preselected rate of about 50° - 500° C. per hour to a diffusion temperature of about 350° - 500° C.;

maintaining said diffusion temperature for a preselected duration up to about 2 hours to diffuse cadmium into a surface of said body and form a planar, high injection efficiency PN junction in said body that is parallel to and at a preselected depth below said surface;

cooling said body in said chamber from said diffusion temperature at a preselected rate of about 50° - 500° C. per hour to a temperature of about 150° C.;

cooling said body to room temperature at any rate, and removing it from said chamber at any time, after said body has been cooled to about 150° C. in said chamber;

contouring and polishing said body into a predetermined form that has a laser cavity adjacent said PN junction for collecting and amplifying infrared radiation of said predetermined wavelength;

applying ohmic contacts to said body by which a voltage can be applied across said PN junction to generate said infrared radiation of predetermined wavelength for collection and amplification in said laser cavity; and

placing said contoured and polished body in intimate thermal association with cooling means for removing heat produced during generation, collection and amplification of said infrared radiation.

4,064,622

METHOD OF MAKING A FLEXIBLE JUMPER STRIP

Gilbert Morris, Amherst, and Richard P. Heinrich, Westville, both of N.H., assignors to Teledyne Electro Mechanisms, Nashua, N.H.

Filed Apr. 30, 1976, Ser. No. 681,780

Int. Cl.² H05K *3/06;* H01R *43/00*

U.S. Cl. 29—625 **8 Claims**

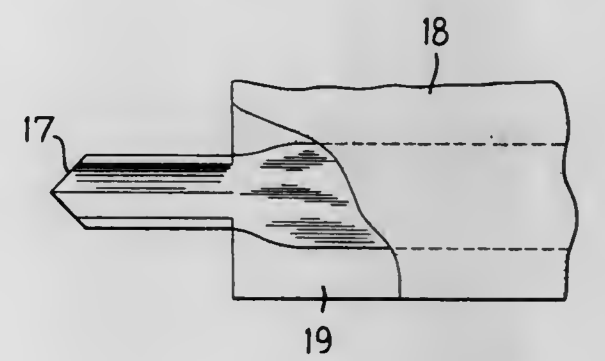

1. A process for making a jumper strip with pin-like lead ends comprising the steps of:

laminating a conductor sheet and a smaller adhesive coated first insulation sheet together so that the conductor sheet extends beyond the area of the first insulation sheet in the area where the jumper pins are to be formed;

etching the conductor sheet so as to form a conductor pattern from the conductor sheet, which pattern includes conductor leads ending in the area beyond the first insulation sheet, the conductor pattern in the area extending beyond the first insulation sheet also having a dam area connecting the leads, said dam area beginning at a certain distance from the first insulation sheet and ending at a certain distance from the end of the leads;

folding the conductor pattern in the area of the dam so that the leads which were beyond the dam area rest on a portion of the leads before the dam area extending onto the first insulation sheet;

forming a jumper pin at the end of each lead in the area beyond the first insulation sheet, said pins extending from a position on the first insulation sheet to the lead end, and

imparting a V-shaped cross section to the pins in their transverse direction in at least part of those portions of the pins that extend beyond the first insulation sheet.

4,064,623
METHOD OF MAKING CONDUCTIVE ELASTOMER CONNECTORS

John R. Moore, Santa Ana, Calif., assignor to International Telephone and Telegraph Corporation, New York, N.Y.
Division of Ser. No. 642,686, Dec. 22, 1975. This application Oct. 28, 1976, Ser. No. 736,435
Int. Cl.² H01R *43/00*
U.S. Cl. 29—629 **8 Claims**

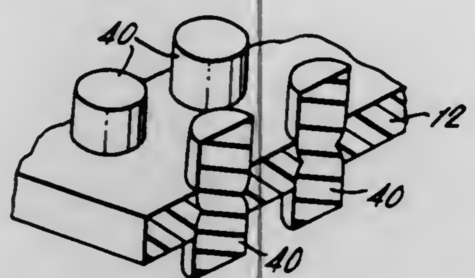

1. A method of making a conductive elastomer connector comprising the steps of:
providing a laminate having upper and lower surfaces comprising an insulative substrate having metal layers bonded to the top and bottom surfaces thereof:
forming openings through said laminate;
filling said openings with a conductive elastomer thereby forming conductive elastomer rods within said openings, said conductive elastomer rods extending only between said upper and lower surfaces of said laminate and removing said metal layers from said substrate with said conductive elastomer rods remaining in said substrate and thereby extending above and below the respective top and bottom surfaces thereof.

4,064,624
SEPARABLE FUNNEL GUIDE AND CRIMPING DIE ASSEMBLY

Paul Joseph Spangler, Novelty, Ohio, assignor to International Telephone and Telegraph Corporation, New York, N.Y.
Filed June 16, 1976, Ser. No. 696,638
Int. Cl.² H01R *43/04*
U.S. Cl. 29—753 **9 Claims**

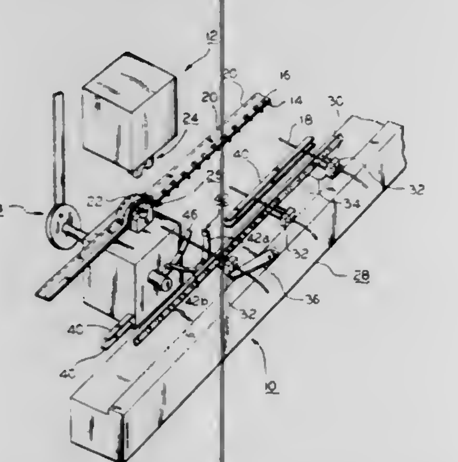

1. An automatic terminal applicator machine wherein terminals on a continuous belt and extending laterally thereof are crimped onto the stripped ends of insulated wires which are inserted into the insulation and wire barrels of the terminals, said applicator comprising:
a pair of cooperable dies, said dies being movable relatively towards and away from each other to crimp a terminal located therebetween onto the stripped end of an insulated wire and each die including insulation and wire crimping portions;
belt feeding means adjacent one side of said dies, said feeding means being effective to index said belt along a path extending past said dies on said one side thereby to locate the leading terminal on said belt between said dies;
means cooperating with said feeding means for positioning a wire transversely of said belt and substantially coaxial with said leading terminal;
means for inserting said wire into said leading terminal;
means for guiding said wire into said terminal comprising a separable wire guide having first and second complementary sections respectively fastened to said crimping dies at the other side thereof and translatable therewith, wherein a funnel is formed when said dies are closed, said funnel being closed in its radial direction and having an aperture at the apex thereof which is immediately adjacent and abutting against said leading terminal and whose cross-sectional area is no greater than the cross-sectional area of the adjacent insulation barrel of said terminal; and,
means for ejecting said wire in the feeding direction of said belt after said dies have crimped said leading terminal on said wire and said funnel guide sections have moved away from each other.

4,064,625
FUNCTIONAL APPARATUS AID

Henry Timothy Mansfield, P. O. Box 434, Barnwell, S.C. 29812
Filed Nov. 25, 1975, Ser. No. 635,255
Int. Cl.² B26B *21/40*
U.S. Cl. 30—90 **35 Claims**

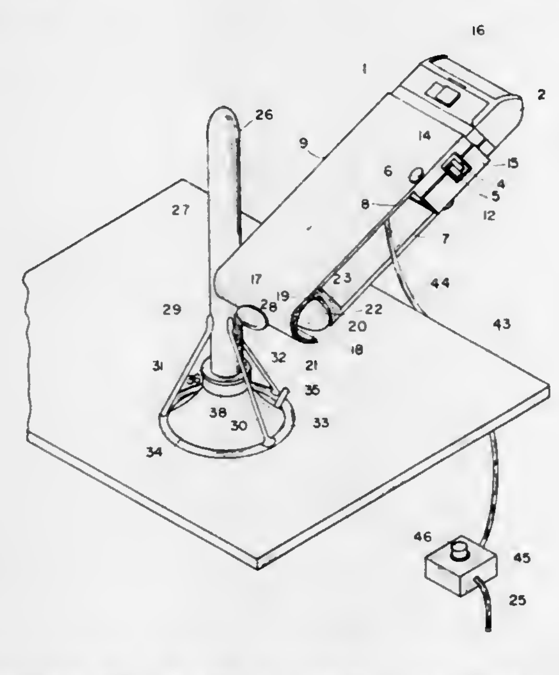

1. A device for use with an apparatus comprising:
a. holding means operative to hold said apparatus;
b. stabilizing means operative to secure said holding means in a stable position, said stabilizing means comprising support means operative to support said device, and attaching means operative to attach said device to said support means; said attaching means comprising a base; a single continuous arcular piece, with an opening, emanating from said base; and fastening means extending through said arcular piece operative to fasten said support means within said opening in said arcular piece; and
c. wherein said holding means comprises a structure containing an opening within which said apparatus may be held, said structure comprising a plurality of sides surrounding said opening in which said apparatus may be held, and overlapping members comprising one of said plurality of sides.

28. An apparatus to support a device comprising:
a. suction means operative to create a suction force on a surface;
b. bar means extending vertically from and attached to said suction means; and
c. means to stabilize said suction means including a ring stabilizer comprising a stabilizing ring and a plurality of stabilizing rods attached to said bar means, said ring stabilizer surrounding the outer perimeter of the suction means.

4,064,626
CUTTER FOR SHEET MATERIAL

Avram Meshulam, Edison, N.J., and Jerome I. Rebold, Timonium, Md., assignors to CBS Inc., New York, N.Y.
Filed Sept. 9, 1976, Ser. No. 721,911
Int. Cl.² B26B *29/00*
U.S. Cl. 30—287 **8 Claims**

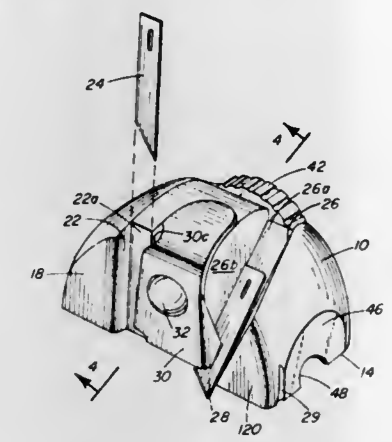

1. A cutting instrument adapted to slide upon the upwardly disposed flat surface of a work-piece in order to cut an edge thereon at a desired one of two predetermined angles, said instrument comprising:
a body member of generally hemispheroidal shape dimensioned to be comfortably grasped in the palm of the hand, the diametral plane of which constitutes a flat bottom for moving over the work-piece, said body portion having first and second external spaced-apart flat guiding surfaces disposed in a common vertical plane intersecting said flat bottom for guiding its movement parallel to a straight edge with which said guiding surfaces may be placed in contact, and having first and second parallel, spaced-apart, flat-bottomed cutting blade-receiving slots formed therein between said flat guiding surfaces, said first blade-receiving slot being disposed vertically with respect to the flat bottom with its bottom lying in a plane parallel to said common vertical plane and said second blade-receiving slot having its bottom inclined upwardly and inwardly at a predetermined angle from said common vertical plane, said first and second blade-receiving slots both intersecting said flat bottom along a common line parallel to and spaced inwardly from said guiding surfaces,
a flat, elongated cutting blade having a cutting edge at one end thereof adapted to be snugly received in either of said first or second blade-receiving slots with its cutting edge extending beyond the flat bottom of said body member, and
clamping means manually operable after a blade placed in a selected blade-receiving slot has been adjusted to the desired cutting depth for securing the cutting blade against the flat bottom of the selected blade-receiving slot.

4,064,627
CARPET CUTTER

Vincent Zanfini, 7569 SE. Gull Way, Hobe Sound, Fla. 33455
Filed Dec. 15, 1976, Ser. No. 750,838
Int. Cl.² B26B *29/00*
U.S. Cl. 30—287 **3 Claims**

1. A carpet cutter comprising
a base adapted to be drawn across the floor and having a plate that fits under the flange of an anchoring strip about which the edge of the carpet is to be folded so that the edge of the plate forms a guide for the cutter,
a generally vertical frame mounted on the base and having opposed ends and generally flat vertical surfaces,
a pair of horizontal slots in the frame extending toward the center of the frame, one from each end and disposed above the base,
a pair of blades provided in the frame between the flat vertical surfaces and with one blade intersecting each horizontal slot, said blades lying in a plane parallel to the edge of

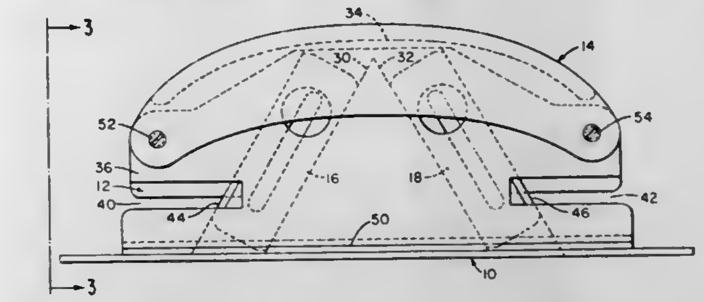

the plate and spaced from said edge a distance which causes the cut made by either blade to form a margin on the carpet that can be folded under the flange,
and a handle for manually engaging the cutter and carried on the frame.

4,064,628
DISPOSABLE DENTAL TRAY FOR TOPICAL APPLICATION OF FLUORIDE GEL AND OTHER DENTAL MEDICATIONS

Stewart Weitzman, Portland, Oreg., assignor to Pacemaker Corporation, Portland, Oreg.
Division of Ser. No. 529,609, Dec. 5, 1974, Pat. No. 3,955,281. This application Mar. 8, 1976, Ser. No. 664,818
The portion of the term of this patent subsequent to May 11, 1993, has been disclaimed.
Int. Cl.² A61C *7/00*
U.S. Cl. 32—14 B **3 Claims**

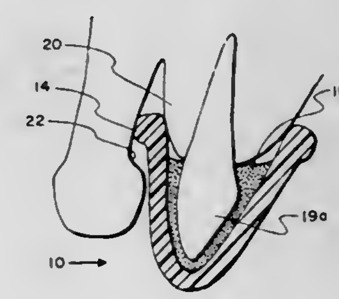

1. In an applicator tray, for topical application of fluoride gel and other dental medications to the teeth, which is of the type comprising an arcuate mouthpiece with a channeled interior recess having a generally U-shaped cross-section and configured to fit over either of the upper and lower teeth of the mouth, the improvement wherein said tray consists essentially of a molded unitary element comprised of flexible, non-hydrotropic fine-cell polymeric foam material, and the bottom and wall surfaces of the interior recess forming said U-shaped channel is anatomically configured at the time of molding of said tray with indentations adapted to mate in reverse impression with the mouth dentition pattern, whereby a comfortable, non-gagging fit of said tray inside the mouth is obtained with said bottom and wall surfaces of said tray being in close proximity to the tooth surfaces and the perimeter of the tray walls being flexed by the bite of the mouth to contact the adjacent periodontal tissue to thereby provide a snug seal therewith and prevent the contamination and dilution by saliva of medication contained in said tray.

4,064,629

CAVITY LINER FOR DENTAL RESTORATIONS

Glenn E. Stoner, and Lyle D. Zardiackas, both of Charlottesville, Va., assignors to The University of Virginia, Charlottesville, Va.

Filed Jan. 26, 1976, Ser. No. 652,238

Int. Cl.² A61K *5/01*

U.S. Cl. 32—15 **8 Claims**

1. A method for applying dental restorations, which comprises:

preparing a cavity within a carious tooth for receiving a dental mercury-containing amalgam filling;

coating the surfaces of said cavity with a layer of an adhesive-metal lining composition consisting essentially of the combination of greater than 46 wt.% of at least one finely divided pure metal at a position higher than tin on the International E.M.F. Series characterized by a corrosion resistance which is higher than the corrosion resistance of said subsequently applied dental amalgam and which has a capability of being amalgamated by diffusion of the mercury into said lining and which has a particle size of less than 400 mesh, with less than 54 wt.% of an ahesive selected from the group consisting of polycarboxylate cements, zinc silico-phosphate, zinc phosphate, copper phosphate, silicate, zinc oxide-eugenol, zinc oxide-eugenol-o-ethoxybenzoic acid, and a resin, to a thickness of less than 100 μ, wherein said composition contains up to about 0.1 wt.% of a wetting agent and a volatile solvent in the final dried form; and

packing said remaining adhesive-metal coated cavity with a Ag-Hg-Sn dental amalgam, whereby free mercury present in said amalgam is diffused into and amalgamates with said metal of said adhesive-metal lining coating so as to form an integral restoration of said dental amalgam and said coating which is corrosion resistant and said adhesive effectively promotes adhesion between said integral restoration and said cavity surfaces.

4,064,630

DENTAL UNITS AND THE LIKE

Herbert Percy Killick, Blackpool, England, assignor to C.M.W. Laboratories Limited, London, England

Continuation-in-part of Ser. No. 239,259, March 29, 1972, abandoned. This application Apr. 18, 1974, Ser. No. 461,868

Claims priority, application United Kingdom, May 2, 1973, 20727/73; May 2, 1973, 20728/73; May 2, 1973, 20777/73; July 18, 1973, 34250/73

Int. Cl.² A61C *19/00*

U.S. Cl. 32—22 **3 Claims**

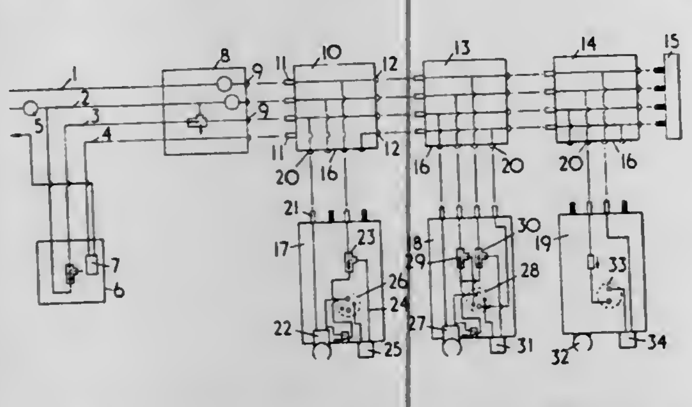

1. A service supply system for supplying at least air and water to a dental instrument comprising a supply unit having air and water sources and respective air and water outlets a first coupling module having at least two first conduits extending therethrough from respective air and water inlets to an air and a water outlet, self-sealing coupling members at each end of said air and water conduits normally sealing the inlet and outlet ends of said conduits, a control module having at least two control conduits extending therethrough having dental instrument control means operatively connected to said conduits, said control module having self-sealing mating coupling members at the respective inlet ends of said control conduits disposed for simultaneous releasable connection to said self-sealing coupling members of said first coupling module and operable when connected to said self-sealing coupling members to establish fluid communication between said conduits in said coupling module and said control conduits, said self-sealing coupling members automatically sealing the respective ends of said conduits when disconnected from their mating coupling members.

4,064,631

SEWING TAPE

Kineko Gebert, 301-G Park Hill Drive, Pewaukee, Wis. 53072

Continuation-in-part of Ser. No. 618,084, Sept. 30, 1975, abandoned, which is a continuation-in-part of Ser. No. 467,342, May 6, 1974, abandoned, which is a continuation-in-part of Ser. No. 333,961, Feb. 20, 1973, abandoned. This application Sept. 24, 1976, Ser. No. 726,426

Int. Cl.² A41H *1/00*

U.S. Cl. 33—2 R **9 Claims**

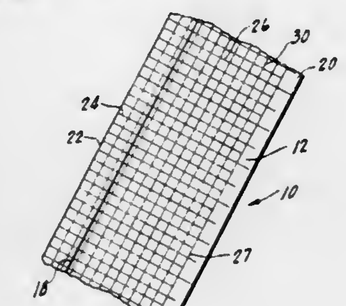

1. A tape for use in the sewing of fabrics comprising an elongated unperforated strip of paper, said strip comprising paper towelling having sufficient pliancy and exterior fibrous properties to require a force of at least approximately 1.98 grams to displace a 7 inches by 1 ⅞ inches portion of the tape along the surface of a hard finish broad cloth, said tape having a pair of longitudinal edges, a first longitudinal line of said tape spaced from a longitudinal edge by an amount equal to a preselected seam width, a plurality of transverse lines normal to said longitudinal edges spaced apart by a unit of measurement and suitable for performing measurements along said edge, and a plurality of additional longitudinal lines on said tape having the same spacing as said transverse lines to form a pattern with said transverse lines having a plurality of rows of squares and suitable as a guide for decorative needlepoint sewing.

4,064,632

TIRE CALIPER

Donald E. Waldecker, 112 Gordon Road, Falls Church, Va. 22046

Filed Aug. 27, 1976, Ser. No. 718,383

Int. Cl.² E21B *47/08;* **G01B** *5/00*

U.S. Cl. 33—143 D **5 Claims**

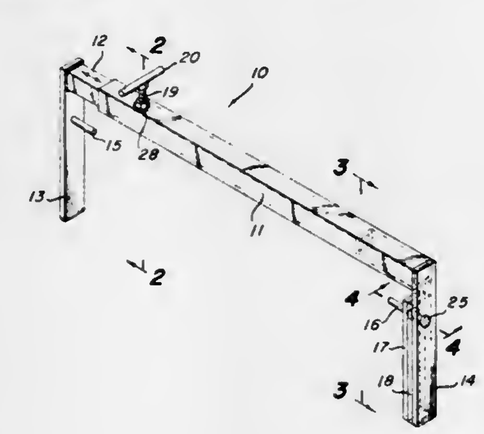

1. A caliper for comparing the diameters of the wear treads of a plurality of tires comprising: first and second telescopically engaged and adjustable portions each having at least one exposed end; a first arm affixed to one exposed end on the first of said portions; a second arm affixed to one exposed end on the first of said portions; a second arm affixed to one exposed end on the second of said portions; a projection on said first arm extending toward a projection on said second arm; said arms and said projections being oriented relative to said portions and relative to each other so that said arms can be caused to engage spaced wear tread portions of a tire when said projections are caused to engage the same side of said tire; and gaging means pivotally mounted on one of said projections which can be disposed between the arm upon which said one projection is carried and a wear tread portion of said tire at the option of a user.

4,064,633

GAUGING INSTRUMENT

Alexander W. Wertepny, 2063 Craig Drive, Des Plaines, Ill. 60018

Filed Mar. 10, 1976, Ser. No. 665,540

Int. Cl.² G01B *5/10, 5/25*

U.S. Cl. 33—147 E **11 Claims**

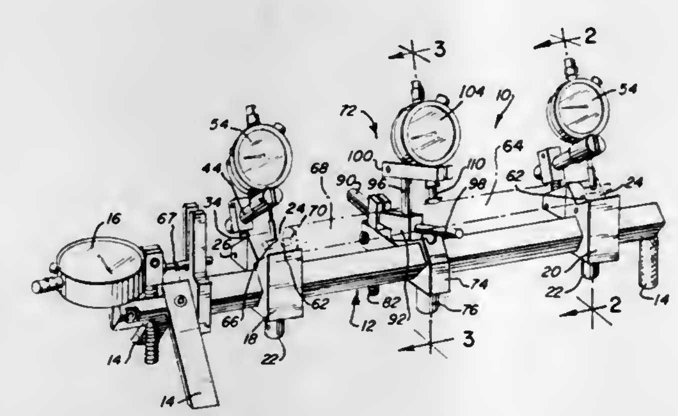

1. In a gauging instrument

a mounting bar,

means for supporting said mounting bar in a spaced relation with respect to a surface,

a pair of V-blocks carried by said mounting bar and being longitudinally movable along said mounting bar,

means for locking said V-blocks relative to said mounting bar,

a support means carried by each V-block, and

a dial indicator means carried by each said support means and having a probe extending toward one surface of the "V" of the V-block whereby a workpiece positioned on said V-blocks is engaged by one of said probes for gauging the roundness and measuring the diameters of said workpiece.

10. In a gauging instrument

a mounting bar,

means for supporting said mounting bar in a spaced relation with respect to a surface,

a mounting block, carried by said mounting bar and being movable along said mounting bar,

means for locking said mounting block relative to said mounting bar,

a shaft carried by said mounting block,

a rod connected to one end portion of said shaft,

a base member resiliently carried by said rod,

an anvil projecting outwardly from said base member,

a second rod projecting upwardly from said base member at substantially a right angle with respect to said anvil, and

a dial indicator means carried by said second rod with a probe extending toward said anvil whereby a workpiece is engaged between the anvil and the probe for measuring the diameter of said workpiece.

11. In a surface stand having a base,

a column mounted for limited pivotal movement and extending generally vertically relative to said base,

a mounting block carried by said column and being movable vertically along said column,

means for locking said mounting block relative to said column,

a dial indicator means carried by said mounting block with a probe extending therefrom, and

an anvil carried by the column and extending up through an opening in said base, said anvil engaging one side of a workpiece with said probe engaging the opposite side of said workpiece whereby said workpiece is gauged.

4,064,634

MOUNTING OF A MEASURING HEAD FOR POSITIONING RELATIVE TO A STRUCTURE

Dan Bryan Davis, Lachine, Canada, assignor to Northern Telecom Limited, Montreal, Canada

Filed June 21, 1976, Ser. No. 698,461

Claims priority, application Canada, Apr. 30, 1976, 251517/76

Int. Cl.² G01B *5/04, 5/10*

U.S. Cl. 33—147 L **8 Claims**

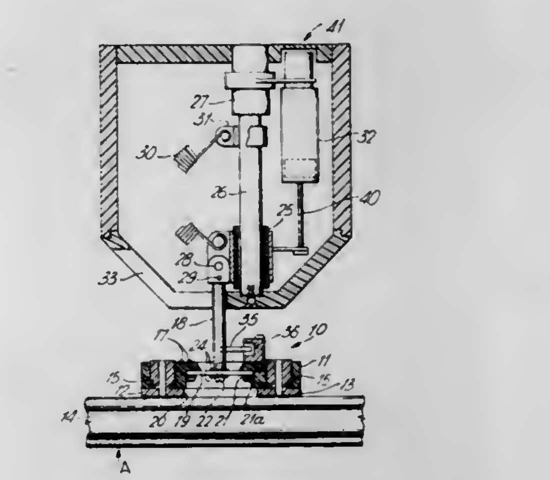

1. A measuring head and a mounting therefore, the head having a peripheral rim defining a recess in a bottom surface and including an aperture extending from said recess through to a top surface, the centre of gravity of the measuring head lying within said recess; a diaphragm of elastomeric material in said recess and extending across said aperture; means securing said diaphragm at its periphery to said head; and a support rod extending from said head in a direction away from said bottom surface, said support rod attached at one end to said diaphragm at its centre.

4,064,635

APPARATUS FOR DRYING PLASTIC TRAYS

Henry Y. Kuhl, Kuhl Road, Flemington, N.J. 08822

Filed June 17, 1976, Ser. No. 696,974

Int. Cl.² F26B *17/30*

U.S. Cl. 34—58 **8 Claims**

1. For use with a conveying system or other similar transferring device, an apparatus for drying articles comprising:

a. a drying zone for receiving at least one wet article to be dried traveling along a conveyor system;

b. a vertically and rotatably movable carriage assembly positioned below said drying zone and adapted to move upwardly to lift and move the article above the conveyor;

c. a rotational control means secured to said carriage assembly and adapted to cause rotation of said carriage assembly and to increase the rotational velocity of said carriage assembly to expel liquid from the article to be dried, said rotational control means also adapted to decrease rotational velocity and stop rotation of said carriage assembly to allow replacing of the article on the conveyor; and

d. a vertical moving means for selectively causing said car-

riage to move into contact with the undersurface of the article located in said drying zone on the conveyor and

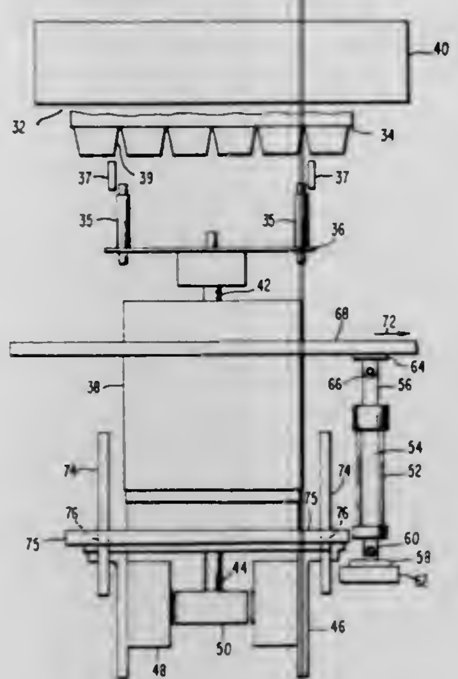

vertically move the article to a position above the conveyor.

4,064,636
APPARATUS FOR DELINTING COTTONSEED
James D. Downing, Scott, Miss., assignor to Delta and Pine Land Company of Mississippi, Scott, Miss.
Filed Jan. 2, 1976, Ser. No. 646,267
Int. Cl.² F26B *19/00*; D01B *1/04*
U.S. Cl. 34—60 **9 Claims**

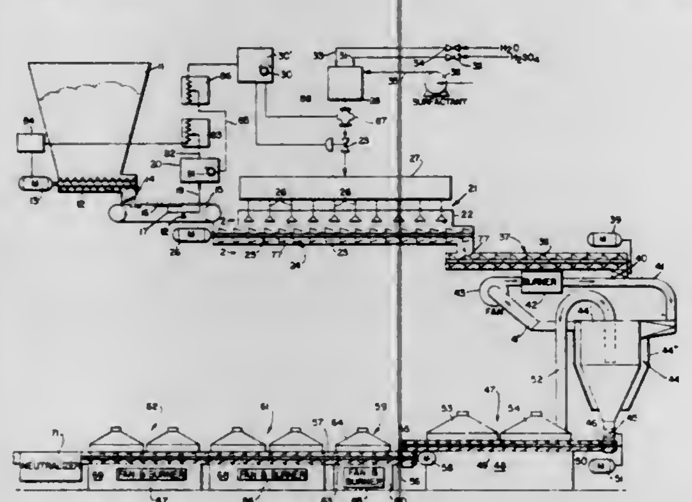

1. Apparatus for the acid delinting of cottonseed having surface fibers of cotton comprising means for establishing and conveying along a path an agitated body of said cottonseed to be delinted, means for spraying acid onto said seed while it passes along a predetermined portion of the path to wet said fibers, control means for combining acid and seed at such respective rates of supply that substantially only enough acid is sprayed onto the seed as can be absorbed into said fibers and said acid being capable of degrading said cotton fibers, and means for drying said wet seed comprising means for subjecting wet seed agitation while passing hot air therethrough, including a conduit through which the wet seed is initially moved by pressurized hot air, a cyclone separator into which said conduit discharges the now partially dried seed, bottom perforated trough means receiving seed from said cyclone separator, conveyor agitator means for moving the seed along said trough means, and means for passing hot air through the agitated seed all along said trough means for completing drying of the fibers and removal of degraded fibers from the seed.

4,064,637
CYLINDER DRYER FOR PAPER MACHINES
Stig Rune Lindgren, Vaxjo, Sweden, assignor to AB Svenska Flaktfabriken, Nacka, Sweden
Filed Mar. 18, 1976, Ser. No. 667,853
Claims priority, application Sweden, Mar. 19, 1975, 7503134
Int. Cl.² F26B *11/02*
U.S. Cl. 34—122 **14 Claims**

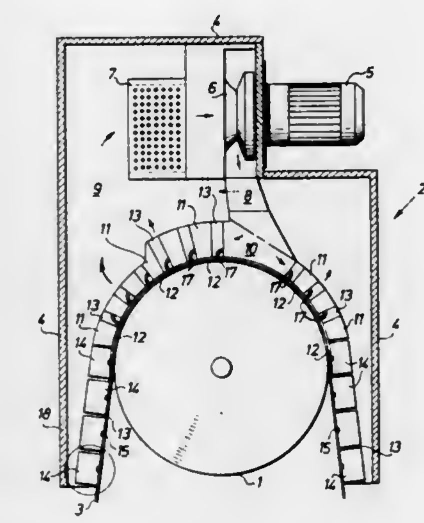

1. A cylinder dryer for drying a wet paper sheet and adapted to be incorporated in the first part of the dryer section of a paper machine, comprising:

a plurality of heated cylinders that are arranged at at least one upper and one lower level for receiving a travelling wet sheet thereon, the wet sheet during the drying process travelling in loops up and down around the cylinders of the upper and lower levels with portions of the wet sheet travelling between the cylinders being unsupported;

a source of blown hot air;

hoods provided for at least some of said heated cylinders, said hoods covering part of the curved surfaces of their respective heated cylinders, each of said hoods being coupled to said hot air source and having first orifice means arranged for blowing hot air at least substantially perpendicularly on to the sheet travelling from one cylinder to another;

the improvement wherein:

at least the hoods for the upper level heated cylinders have extended wing members whose surfaces facing the wet sheet extend along at least a substantial portion of said wet sheet that travels unsupported by, and between, alternate heated cylinders, said wing members projecting substantially parallel and in close proximity to said unsupported portions of said wet sheet; and

said surfaces of said extended wing members have second orifices arranged for blowing streams of hot air substantially parallel to said unsupported portions of said wet sheet in both the same direction as its direction of travel and opposite to its direction of travel for stabilizing the said sheet.

4,064,638
APPARATUS FOR DRYING SEEDS
Zenas Allen Stanfield, Bloomington, Ill., assignor to Ciba-Geigy AG, Basel, Switzerland
Filed June 30, 1976, Ser. No. 701,734
Int. Cl.² F26B *17/12*
U.S. Cl. 34—174 **5 Claims**

1. An apparatus for continually drying a granular material comprising:

a cylindrical housing having a roof thereon with an aperture at the center of said roof, said housing having closable openings therein, one of which is a discharge opening in the side of said housing;

a downwardly directed conical wall filling the entire inter-

nal cross-section of said housing and having a plurality of perforations distributed evenly therein and having an opening at the bottom thereof;

an open sided pan beneath said bottom opening of said conical wall and inclined toward said open side;

a vibrator operatively associated with said pan for vibrating said pan in a direction parallel to the bottom of said pan;

a discharge conveyor in said housing having one end beneath the open side of said pan and the other end at said discharge opening;

a distributing chute in the upper part of said housing above said conical wall and having a funnel-shaped receiving portion beneath the opening in said roof and a distributing pipe extending from the bottom of said funnel-shaped receiving portion downwardly and outwardly from the

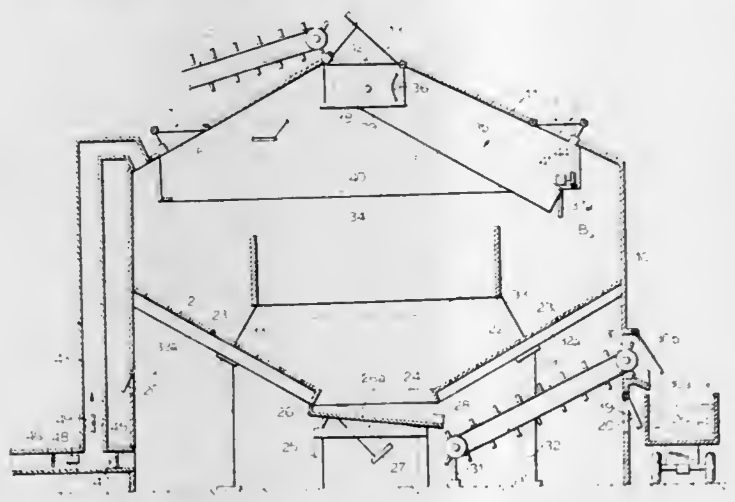

center of said housing to adjacent the interior periphery of said housing;

a distributing chute rotating means coupled to said distributing chute for rotating said distributing chute with said funnel-shaped receiving portion beneath said opening in said roof and the end of the distributing pipe moving around the periphery of said housing;

a gaseous drying medium inlet pipe opening into said housing below said conical wall and having a gaseous medium pumping means therein and a heater and a damper downstream of said pumping means; and

a reverse flow pipe extending from said inlet pipe between said heater and said damper and through said roof into the space above said conical wall and having a further damper therein.

4,064,639
INSTALLATION FOR DRYING MOLDED BLANKS
Carl Otto Pels-Leusden; Robert Stupperich; Hans-Bernd Weber, and Rudi Reinders, all of Essen, Germany, assignors to Institute fur Ziegelforschung Essen e.V., Essen, Germany
Filed Aug. 18, 1975, Ser. No. 605,483
Int. Cl.² F26B *19/00*
U.S. Cl. 34—212 **15 Claims**

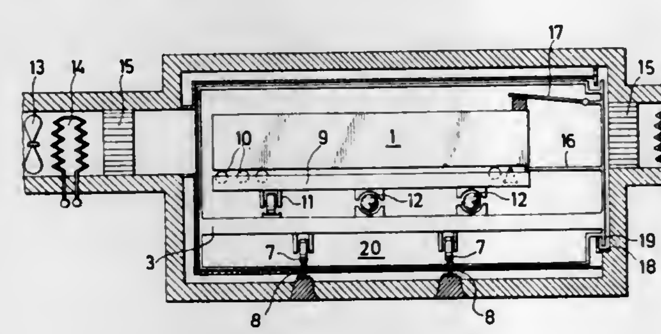

1. A drying installation for the drying of molded blanks such as plank bricks, large surface structural members of ceramic materials and the like comprising:

a substantially closed longitudinally extending drying chamber separated into a plurality of adjacently arranged parallel drying channels, each said drying channel comprising at least one blower with adjustable flow direction, at least one heater, at least one air straightener, said parallel drying channels being separated into two groups, said chamber having an entry end and an exit end;

air supply means coupled to each of said parallel drying channels for successively admitting and guiding dry air having different temperature, humidity, flow rate, and quantity;

means for switching said two groups of said drying channels in series with respect to said air supply means to guide the dry air in an alternate direction through said parallel arranged drying channels;

conveyor means for moving the blanks in a longitudinal direction through said drying chamber, said conveyor means being guided perpendicularly with respect to the flow of the dry air through said adjacently arranged drying channels;

means for admitting drying air to one of said two groups of channels at the entry end where the blanks enter said drying chamber and in the same direction of movement as said conveyor means, means for admitting drying air to the other of said two groups of channels in a countercurrent flow opposite to the direction of movement of said conveyor means at said exit end where the blanks leave said drying chamber; and

exhaust means in said drying chamber for drying air at the point in said drying chamber where the shrinking process of the blanks is completed, said exhaust means being located between said entry end and said exit end.

4,064,640
FOUR-POINT GROUND REACTION FOR SKID EQUIPPED HELICOPTERS
Thomas R. Cummings, and Anthony J. Mazza, Jr., both of Binghamton, N.Y., assignors to The Singer Company, Binghamton, N.Y.
Filed Jan. 7, 1976, Ser. No. 647,254
Int. Cl.² G09B *9/08*
U.S. Cl. 35—12 K **4 Claims**

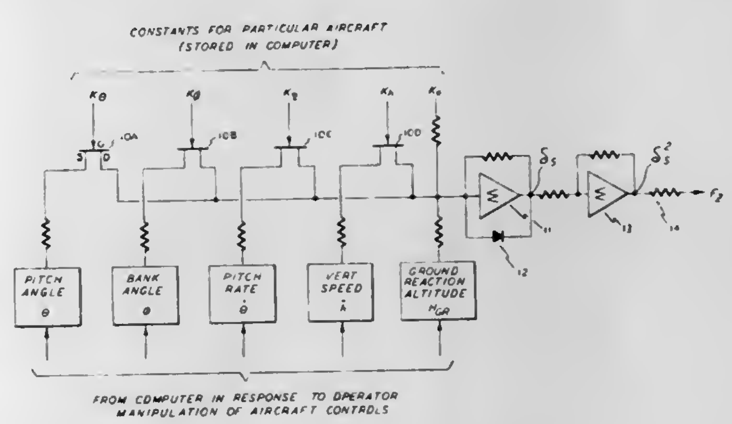

1. In an aircraft simulator comprising a simulated aircraft cockpit with controls operable by a trainee, said cockpit being mounted on a moving platform which is coupled to a computer system responsive to the trainee's manipulation of the cockpit controls to provide drive signals to move the platform to simulate the response cues the actual aircraft would experience were a pilot to move the controls of the aircraft in the same manner as the trainee operator of the simulator aircraft, a method for simulating realistic ground handling of a skid-equipped helicopter comprising the steps of:

a. storing in said computer system the aircraft dynamic control responses, the constant multipliers of said dynamic control responses, and the equations of motion representative of a selected skid-equipped helicopter;

b. deriving first signals representative of helicopter ground reaction forces resulting at each skid's strut attach points from said trainee's manipulation of said cockpit controls;

c. combining said first signals representative of ground reac-

tion forces with the data stored in said computer system representative of said selected skid-equipped helicopter so as to derive conventionally within said computer system second signals representative of all other forces and moments affecting said helicopter as a result of said trainee's manipulation of said cockpit controls;

d. driving said aircraft simulator into motion in response to said second signals to provide response cues for said trainee operator to react to similar to the response cues provided by said actual, selected skid-equipped helicopter whereby, the signals representative of aircraft motion now including ground reaction affects for each strut attach point, the "light-on-skids" maneuver may be experienced by said trainee.

4,064,641
FOOTWEAR
Beth Levine, New York, N.Y., assignor to Betherb, Inc., New York, N.Y.
Filed Nov. 26, 1976, Ser. No. 745,123
Int. Cl.² A43B *3/00;* **A41D** *1/06*
U.S. Cl. 36—1.5 **9 Claims**

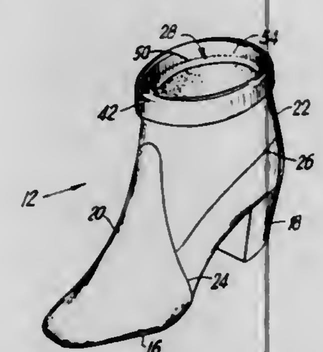

1. In an article of footwear, the combination of a shoe portion comprising an upper, a mouth in said upper for accommodating entry of a foot therein, a tubular portion detachably coupled to said shoe portion, said tubular portion having first and second open ends, said first open end for receiving a foot therein prior to its entry into said mouth, fastening means for selectively coupling said second open end with said mouth, means for concealing said fastening means when said shoe and tubular portions are coupled together, said concealing means including a reversible cuff proximate said second open end, said reversible cuff having a first upwardly folded position exposing said fastening means and a second downwardly extended position covering said fastening means, said concealing means further including a reversible collar proximate said mouth of said upper, said collar having a first inwardly folded position wherein said collar is positioned against an inner wall of said upper, and an outwardly turned position overhanging said mouth of said upper, whereby said shoe portion can be used alone as a low boot and also can be used in combination with said tubular portion as a high boot.

4,064,642
WALKING BOOT ASSEMBLY
Hubert C. Vykukal; Alan B. Chambers, both of Los Altos, and Roy H. St. John, Los Gatos, all of Calif., assignors to The United States of America as represented by the National Aeronautics and Space Administration, Washington, D.C.
Filed Dec. 23, 1976, Ser. No. 753,976
Int. Cl.² A43B *7/16, 5/04;* **A62B** *17/00*
U.S. Cl. 36—92 **8 Claims**

1. In a walking boot assembly, the combination comprising:

A. a bootie having a sole and an upper portion adapted to be attached to a foot of a wearer;

B. a walking boot having an inner sole and an upper portion for receiving said bootie; and

C. coupling means for releasably attaching said bootie to the walking boot, said coupling means including a protuberance affixed to the sole of said bootie, a recess defined in the inner sole of said boot for receiving said protuberance

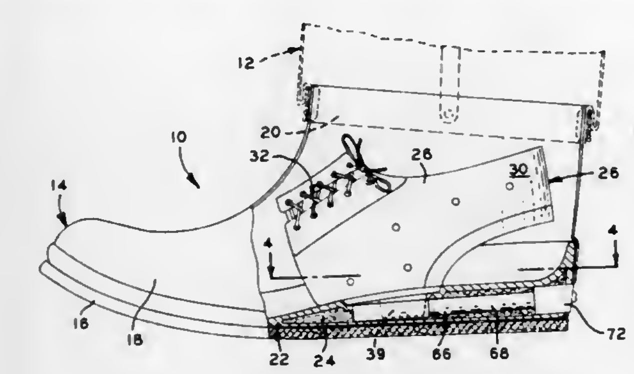

in mated relation, and means for securing said protuberance in mated relation with said recess.

4,064,643
UNDERPHONE INDEX
Francis Greif, 199 Sussex Gardens, London W.2, England
Filed Mar. 30, 1976, Ser. No. 671,954
Claims priority, application United Kingdom, June 24, 1975, 26806/75
Int. Cl.² G09F *11/30*
U.S. Cl. 40—65 **9 Claims**

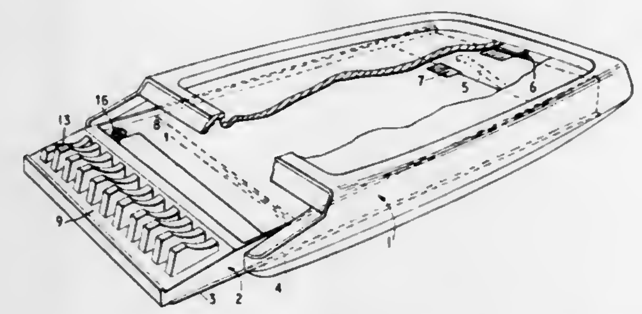

1. An index of the type herein defined comprising an outer housing adapted to stand beneath a telephone; an inner housing in the form of a tray slideably mounted within the said outer housing for movement with respect thereto between an inner retracted position where only a front portion of said tray is exposed and freely accessible and an outer withdrawn position where said tray extends through a substantial distance forwardly beyond said housing with only an inner rear portion of the tray remaining in engagement with said housing; a plurality of superposed cards for bearing information such as names, addresses and telephone numbers of telephone subscribers; magnetic means on the cards and housing to provide mutual attraction therebetween; and a plurality of manually operable card selection members provided on the tray; wherein each said cards has at a front end a perforated tab in a different position from the tabs of the other cards and each said card selection member comprises a lever of which a front exposed part is situated at and freely accessible at the front portion of the tray, forwardly beyond said tabs while a rear part is situated beneath and movable up into engagement with the tab perforation of its associated card of the said plurality of cards to withdraw only the selected card from the stack when the front part of the lever is depressed to displace the rear part of the lever up into engagement with a tab perforation and the tray is withdrawn from the housing, irrespective of the position of said card in the stack, and to leave all the other cards of the stack retained by magnetic attraction inside the said outer housing, all of the structure of said tray and all of the structure of said plurality of manually operable card selection members being situated beyond a space over said plurality of superposed cards, including said perforated tabs at said front ends thereof, so that said cards are carried by said tray with said front end of each card uncovered and freely accessible when the tray is moved with respect to said outer housing to a withdrawn, open and extended position so that any card can be conveniently removed and replaced for the purpose of changing or adding information on the card.

4,064,644
FRAME CONSTRUCTION AND CORNER CLIP APPARATUS
Richard F. Warner, Fort Lee; William Billand, Montville, and Riggi Vincent, Union, all of N.J., assignors to Arthur Dash and Jay Reidel, both of Bronx, N.Y., part interest to each
Filed May 14, 1976, Ser. No. 686,319
Int. Cl.² E04C *2/38*
U.S. Cl. 40—152 **1 Claim**

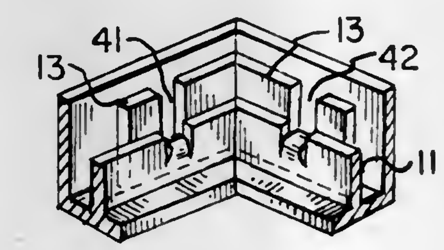

1. A frame of the type used for displaying a photograph, picture or the like, comprising a unitary elongated member, having an F-shaped cross section thus defining an inner upstanding flange and an outer upstanding flange, said flanges being integrally formed and perpendicular with a bottom surface of a base member, the top surface of said member forming the front of said frame, said frame being fabricated by forming V-shaped notches in said member at selected intervals, said notches formed along the length of said bottom surface of said base member and through said inner-most flange, and scored depressions located at the base of said V notch and along the outer-most flange for bending said frame at said scored lines to cause the sides of said "V" notches to coact with each other, thus forming three corners of said frame, with a fourth corner indicative of the opposite ends of said member, means inserted between said first and second upstanding flanges at said fourth corner, said means including an "L" shaped bracket with the arms of said "L" of a substantially greater height than the width and of a greater height than said inner upstanding flange, said bracket including a first elongated aperture transverse to said arm on the top of one arm of said "L" and extending from said top along a major portion of said arm, and a second elongated aperture on the top of said other arm of said "L" and relatively congruent to said first aperture, and indented inner flange material directed through said first and second apertures to firmly secure said frame at said fourth corner.

4,064,645
SACHET FOR THE ATTACHMENT OF STAMPS, TOKENS AND LIKE DEVICES TO CONTAINERS
William Wood, Naphill, England, assignor to Harrison & Sons (High Wycombe) Limited, High Wycombe and Green Shield Trading Stamp Company Limited, Edgware, both of, England
Filed May 23, 1975, Ser. No. 580,354
Claims priority, application United Kingdom, June 5, 1974, 24948/74
Int. Cl.² G09F *1/10*
U.S. Cl. 40—159 **2 Claims**

1. A sachet for holding a trade article and for attachment to an article of merchandise, comprising a paper backing sheet, a continuous transparent glassine facing sheet which is imperforate within its borders, a cold-seal adhesive coating completely covering a back surface of the facing sheet, a cold-seal adhesive coating on a front surface of the backing sheet at least completely around a peripheral band thereof, the cold-seal adhesive coatings sealing only when in contact with a corresponding coating, the facing and backing sheets being secured together by the coatings of cold-seal adhesive so as to form a completely enclosed pocket between the sheets, the transparent facing sheet being rendered impervious to moisture by the cold-seal adhesive coating on the back surface thereof, and a

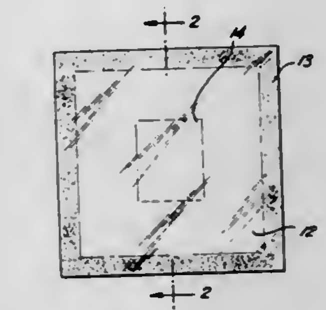

heat-activated adhesive coating on a back surface of the backing sheet for fastening the sachet to an article of merchandise.

4,064,646
FISHING LURE
Mario J. Vercellone, and William S. Travers, both of 87 Wilbur Ave., North Dartmouth, Mass. 02747
Filed June 23, 1976, Ser. No. 698,892
Int. Cl.² A01K *85/00*
U.S. Cl. 43—42.41 **2 Claims**

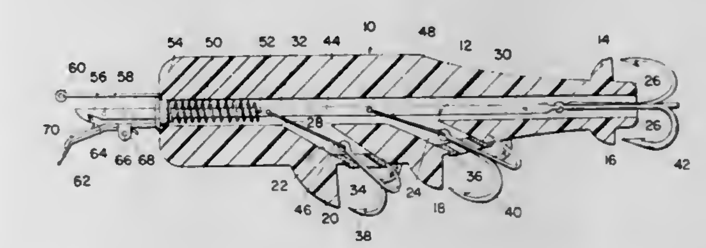

1. A fishing lure comprising body means for drawing through the water to simulate fish bait, said body means having hook means retractably extending therefrom for hooking fish, said hook means mounted on retractor means secured to said body means for holding said hook means proximate to said body means, said retractor means releasing said hook means to hang free from said body means when said fishing lure is drawn through water, said retractor means comprising shaft means for securing said hook means thereto, said shaft means being slidably mounted in said body means, hook protection means on said body means for shielding the points on said hook means, said shaft means being slideably positionable to hold said hook means proximate to said hook protection means in a first position, said shaft means further being slideably positionable to move said hook means away from said hook protection means and to hang freely from said body means in a second position, said shaft means being releasably secured to trigger means for holding said shaft means in said first position, resilient means for resiliently biasing said shaft slideably from said first position to a said second position when said trigger is released, said trigger being released and said shaft being resiliently biased into said second position when said lure is moved through water, said trigger comprising sear means secured to pivotal diving plane means which is pivotally secured to stationary diving plane means, said stationary diving plane means being secured to said fishing lure, said pivotal diving plane means extending from said sear means for forcing said sear means to disengage said stop when said lure is drawn through water.

4,064,647
CATAPULT LAUNCHED MODEL GLIDER
Jerome H. Lemelson, 85 Rector St., Metuchen, N.J. 08840
Filed June 7, 1976, Ser. No. 693,417
Int. Cl.² A63H *27/14*
U.S. Cl. 46—81 **5 Claims**

5. A gliding toy for use with a catapult launching device which launching device includes spring means rubber band for

catapulting said toy into gliding flight, said gliding toy being formed with a body portion made at least in part of low density cellular plastic having relatively low strength, an elongated spine-like member formed of a material having substantially greater rigidity and strength than said cellular plastic material forming said body portion of said flying toy, said elongated

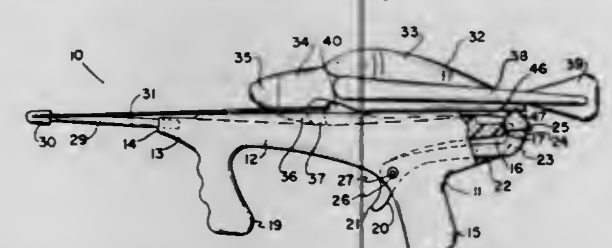

member being partly embedded within and secured to said body portion of said glider which is made of said low density cellular plastic, said elongated member having a downwardly extending protrusion near the rear end thereof to serve as a retaining means for the spring means of said catapult launching device when said launching device is operatively engaging said gliding toy during the act of catapult launching same.

4,064,648
WEATHER RESPONSIVE INSULATION SYSTEM FOR GREENHOUSES AND THE LIKE
Charles C. Cary, Cambridge, Mass., assignor to Roll-Out Insulation Systems, Inc., Cambridge, Mass.
Filed Feb. 23, 1976, Ser. No. 660,767
Int. Cl.² A01G *9/00, 9/24*
U.S. Cl. 47—17 **10 Claims**

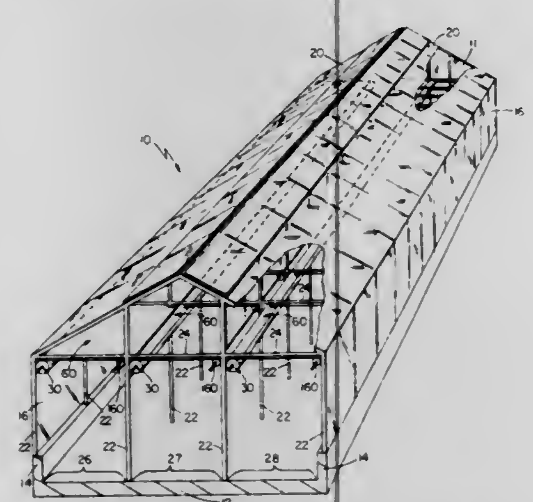

1. In a greenhouse having a roof, a pair of spaced transverse end walls, and a pair of spaced longitudinally extending side walls, a system for reducing heat loss through the roof during one part of a day and for permitting sunlight to pass through the roof to a growing area within the greenhouse during a second portion of the day, said system comprising:
- a flexible sheet of insulating material mounted within the greenhouse and arranged for movement between a storage position in which the sheet is stowed along a longitudinal side of said growing area and permits sunlight to pass through the roof to the growing area, and an insulating position in which the sheet is deployed in a generally horizontal plane extending across the growing area between the growing area and the roof;
- support means engaging the sheet at spaced intervals along its length and supporting the sheet in the storage and insulating positions;
- deploying means for moving the sheet from its storage to its insulating position;
- retracting means for moving the sheet from its insulating to its storage position;
- means providing a seal between each of the opposite longitudinal edges of the sheet and the most adjacent side wall of the greenhouse when the sheet is in its insulating position, said sheet and said means providing a seal substantially preventing heat loss from below said sheet to above said sheet when said sheet is in said insulating position; and,
- control means operatively connected to and controlling said deploying means and said retracting means,
- said control means including a snow-ice detection system for detecting the build-up of non-liquid precipitation and having a generally planar, imperforate, horizontal, upwardly-facing accumulation surface arranged to retain non-liquid precipitation incident thereupon and to permit liquid precipitation to spill over the edges thereof, and
- said control means being responsive to build-up of non-liquid precipitation on said accumulation surface to prevent said deploying means from moving said sheet towards said insulating position and to cause said retracting means to move said sheet towards said storage position when the weight of said build-up exceeds a predetermined level.

4,064,649
WINDOW, PARTICULARLY INTENDED FOR INSTALLATION IN AN INCLINED OR FLAT ROOF
Villum Benedikt Kann Rasmussen, Klampenborg, and Lars Erik Kann-Rasmussen, Holte, both of Denmark, assignors to V. Kann Rasmussen & Co., Soborg, Denmark
Continuation of Ser. No. 583,207, June 3, 1975, abandoned. This application Nov. 29, 1976, Ser. No. 745,696
Int. Cl.² E05D *15/30, 15/42, 15/44*
U.S. Cl. 49—250 **4 Claims**

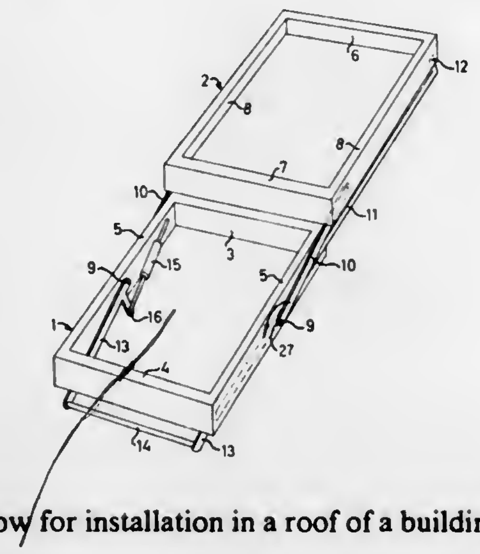

1. A window for installation in a roof of a building, comprising:
- a rectangular frame, including a pair of lateral frame members, a bottom frame member, and a top frame member;
- a sash, including corresponding lateral, top, and bottom sash members;
- a pair of slide rails respectively extending displaceably along said lateral frame members and hingedly connected to said sash adjacent the top member thereof; and
- a pair of link arms having first ends respectively journaled to said frame at about the respective central regions of said lateral frame members and second ends journaled to said sash adjacent the bottom member thereof, said link arms at said first ends being interconnected through an internal maneuvering handle, said handle including a pair of lateral maneuvering arms connected to said link arms at said first ends, and a grip rod rigidly interconnecting said maneuvering arms and extending substantially perpendicular thereto at a point spaced from said first ends, displacement of said handle causing a corresponding displacement of the sash with respect to the fixed frame, said bottom member of the sash following a path, during the opening or closing motion of the sash, that is defined by the fixed length of the link arms, and said top of the sash moving laterally along a path defined by the slide rails, said slide rails being oriented in a plane parallel to and displaced from the plane defined by said link arms.

4,064,650
DOOR LATCH
A. Henry Schwab, Fort Washington, Pa., assignor to Philadelphia Tramrail Company, Philadelphia, Pa.
Filed May 4, 1976, Ser. No. 683,150
Int. Cl.² E05F *11/54;* **E05C** *3/00*
U.S. Cl. 49—277 **13 Claims**

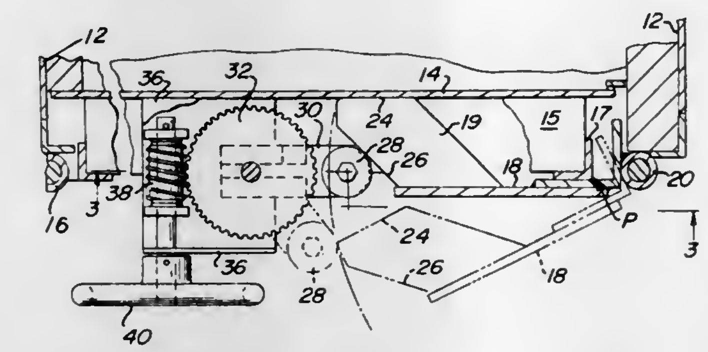

1. An apparatus comprising a housing having an opening, a door movably supported by said housing for movement from a position wherein it closes said opening to a position wherein the opening is unobstructed, latch means for controlling the initial opening movement of said door so that the door does not pop open, said latch means including a latch movably supported by the housing and overlying a portion of the door and a cam follower movably supported by the door, said latch having a cam surface cooperating with said cam follower to block opening movement of the door, means connected to the cam follower and selectively operable for moving the cam follower along the cam surface and in a direction away from the door until the cam follower is out of the path of movement of the cam surface on said latch whereby the latch and door are thereafter movable to an open disposition.

4,064,651
PIVOTED WINDOW
Juan Puigdomenech Homs, Calle Padre Huix, 1, VIC Barcelona, Spain
Filed Jan. 9, 1976, Ser. No. 647,915
Claims priority, application Spain, Jan. 15, 1976, 209532
Int. Cl.² E06B *7/205*
U.S. Cl. 49—319 **7 Claims**

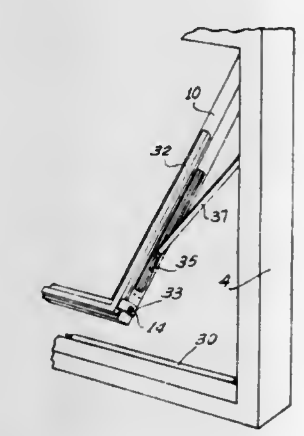

1. In a pivoted window comprising a fixed frame to which is articulated a movable frame pivotable to both sides of the fixed frame, and also a channel guide for a roller blind adapted to move together with the movable frame or to remain fixed, wherein the movable frame is provided with means for predetermining and fixing at least one inclined position, the said means being adapted to be operated by means of a drive device which at the same time acts on a device for locking the movable frame in its closed position, which is a bolt locking means whose bars project laterally outwardly so as to be received in cavities provided in the fixed frame, the improvement comprising wings fixed to a part of the blind guide remote from the pivot and provided with apertures adapted to come into alignment with ends of the closure bars of the bolt locking means when the guide and the frame are in adjacent positions, so that the said bars can pass through the said apertures, thereby constraining the blind guide to move with or be stationary with the pivoting frame, a sealing mechanism being provided in the fixed frame which comprises at least one articulated lever bearing at one of their ends on a strip carrying elastic lip adapted to be applied under pressure against the movable frame when in its closed position and to be moved away from the movable frame, the lever being operated by the end of the bar of the bolt locking mechanism, said lever being operatively linked to a displaceable element acted on by the end of the bar of the bolt locking mechanism, the displaceable element being urged toward the end of the bar of the bolt locking means, and comprising a projecting latch subjected to pressure by spring means and tending to project outside and enter the aperture in the wing of the blind guide, thereby to lock the latter against movement.

4,064,652
DOOR HOLD-OPEN MECHANISM
Laird E. Johnston, Birmingham, Mich., assignor to General Motors Corporation, Detroit, Mich.
Filed May 27, 1976, Ser. No. 690,527
Int. Cl.² E05B *65/06;* **E05C** *17/00*
U.S. Cl. 49—394 **4 Claims**

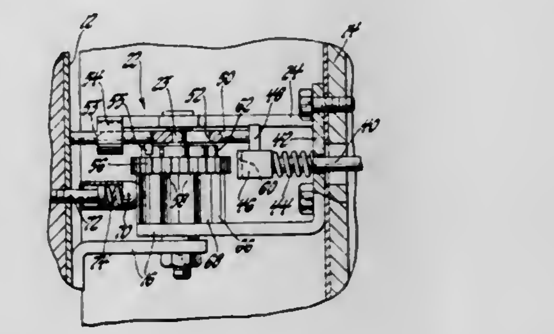

1. A door hold-open mechanism for use with a vehicular door, door frame and door hinge, said mechanism comprising a door latch assembly including inner and outer door handles, a latch wheel having a predetermined number of teeth formed thereon and operatively connected between said door and said door hinge, an index cam and a detent plate fixedly secured to oppositely disposed faces of said latch wheel and having a predetermined lesser number of teeth formed thereon than the number on said latch wheel, a latch segment operatively connected to said door latch assembly and having an end face contoured to match said teeth on said latch wheel, resilient means operatively connected to said latch segment for urging said contoured end face of said latch segment into engagement with said latch wheel, said latch segment being retained away from said latch wheel against the force of said resilient means upon actuation of said door latch assembly via one of said handles for permitting manual opening of said door to any of a predetermined plurality of desired hold-open positions whereupon release of said one of said handles permits said latch segment to be urged by said resilient means into engagement with said latch wheel, a spring-loaded detent plunger mounted on said door frame and biased into contact with a valley of said toothed detent plate for retaining said door in a selected open position, an index pawl slidably mounted on said door and adapted to abut against said door frame and contact said latch segment for disengaging said latch segment from said latch wheel while said door is being closed without said door latch assembly being actuated, and an index pin mounted on said index pawl for engaging said index cam during the closing movement of said door and rotating said index cam to a position wherein said index cam and, hence said latch wheel are reset for the next opening cycle.

4,064,653
SLIDING WINDOW
Robert P. Randall, Clinton, and Richard L. Torbett, Mars, both of Pa., assignors to Three Rivers Aluminum Company, Pittsburgh, Pa.
Filed Oct. 29, 1976, Ser. No. 737,089
Int. Cl.^{2} E05D *15/08*
U.S. Cl. 49—458 **7 Claims**

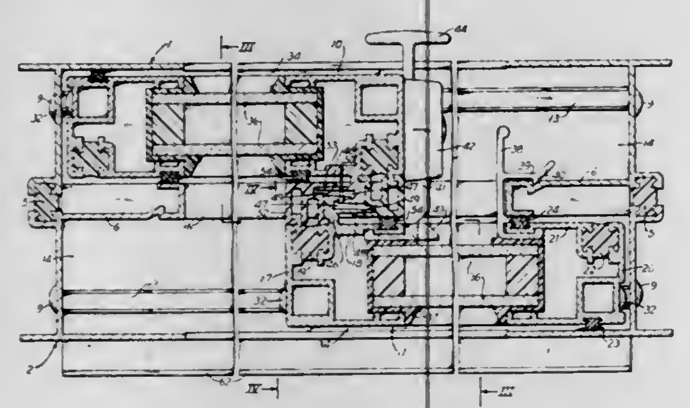

1. A horizontally sliding window comprising a pair of window sash disposed in parallel vertical planes with the right-hand end of one sash overlapping the left-hand end of the other sash when the window is closed, said overlapping ends including vertical sash rails, a vertical metal bar joined to each rail between it and the other sash, each bar having an inner and an outer vertical slot in it separated by a vertical flange and facing the opposite end of the sash that carries the bar, the outer side wall of the outer slot forming a vertical tongue extending into the outer slot in the other bar so that the tongues overlap in engagement with each other to interlock the two bars, and a vertical nonmetallic sealing strip connected to each bar and extending across the flange on the other bar in engagement with that flange to form a seal.

4,064,654
SEALED CLOSURES WITH WEATHER STRIPPING
Harold G. Olson, Westport, Conn., assignor to H. G. Olson & Co., Inc., Amesbury, Mass.
Continuation of Ser. No. 560,259, March 20, 1975, abandoned, which is a continuation of Ser. No. 371,304, June 18, 1973, which is a division of Ser. No. 186,237, Oct. 4, 1971, Pat. No. 3,758,992, which is a continuation-in-part of Ser. No. 44,977, June 10, 1970, abandoned. This application June 18, 1976, Ser. No. 697,576
Int. Cl.^{2} E06B *7/23*
U.S. Cl. 49—489 **5 Claims**

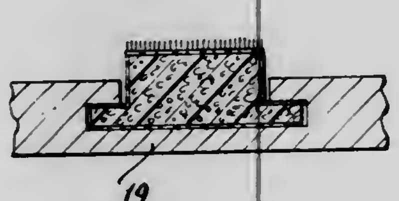

1. In a closure comprising relatively slidable members having a region of overlap to be sealed against infiltration of water and air by weatherstripping, one of said members being formed in said region with a groove which is generally T-shaped in cross-section so as to present a pair of parallel opposed lips in the outer surface of said one member adjacent the other member, said lips extending parallel to the bottom surface of said groove, the confined spaces between said bottom surface and the inner surfaces of said lips opposite said bottom surface serving to define an effective depth dimension of said groove, the separation between said lips establishing a groove mouth the width of which is substantially less than the width of said groove;

said weatherstripping comprising a sealing element including an elongate substrate in said groove formed with a core of foamed material providing flexibility and resilient compressibility;

said substrate being pre-formed, prior to installation in said groove, with marginal side portions and a central sealing segment of substantially greater height than said marginal side portions;

the width of said substrate including said marginal side portions, when in a free state before installation in said groove, being greater than the width of said groove mouth and being dimensioned with a relationship with respect to the width of said groove providing for retention in said groove without any significant compression in the lateral direction, whereby to facilitate installation of said element by the process of pulling said substrate longitudinally into said groove without excessive friction or chance of injury to the foamed material during such installation;

said pre-formed central sealing segment having a height such that it extends up through the region of said groove mouth to a position at least slightly above the level of said outer surface of said one member;

said substrate further having a bottom surface which conforms to the bottom surface of said groove across the full width of said substrate to provide vertically-reactive structural strength affording firm support for said pre-formed central sealing segment;

a tough outer skin on said substrate, at least on said pre-formed central sealing segment, to enhance the structural integrity of said substrate and to minimize further the changes of damage to said substrate when it is initially installed by pulling the substrate longitudinally into the groove; and

resilient sealing means attached to and projecting outwardly away from said pre-formed central sealing segment, said resilient sealing means effecting engagement with the adjacent surface of said other member to provide a desirably tight, water-and-air-resistant joint between said two members, said resilient sealing means being formed of means to provide relatively low-friction sliding movement between said two members whereby to permit such movement to be produced by hand without significant impediment.

4,064,655
DOOR AND METHOD OF MAKING SAME
Romer G. Weyant, 81 Edgewater Drive, Elkhart, Ind. 46514
Continuation of Ser. No. 623,031, Oct. 16, 1975, abandoned. This application Jan. 28, 1977, Ser. No. 763,363
Int. Cl.^{2} E06B *3/00.*
U.S. Cl. 49—501 **3 Claims**

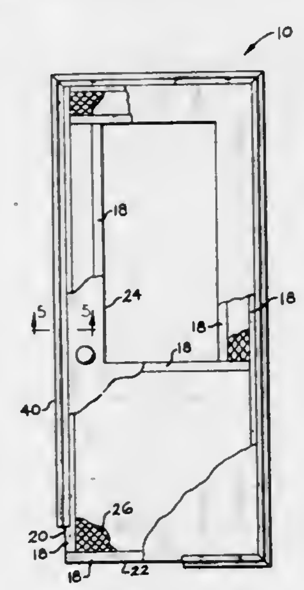

1. A rectangular door having front and rear sheet metal panels in spaced relation, a core portion sandwiched between said sheet metal panels and on which the outer peripheries of said sheet metal panels are mounted, said core portion including wooden members defining the top, bottom and vertical side edges thereof and thermal sound insulation material retained within the confines of said wooden members and sheet metal panels, said wooden members having rear and front surfaces, the outer peripheries of said sheet metal panels covering the rear and front surfaces of said wooden members and terminating at the outer peripheries of said surfaces, and metallic extrusions defining U-shaped channel members with elastic properties extending around and enclosing in engaged relationship the outer peripheries of said sheet metal panels and the wooden members sandwiched therebetween, each of said channel members having a transverse base and a pair of side walls extending inwardly perpendicular to said base and in parallel relation to define the U-shaped portion of the channel member and having a flange extending outwardly from said transverse base to provide in cooperation with the latter marginal recess for fitting into a door frame, and the channel member enclosing one vertical edge of the core portion extending the full length thereof and being cambered in the transverse direction of said base in an essentially unstressed condition so that it is concave in the rearward direction of the door when the latter is open and so that it is substantially straight in a stressed condition when the door is closed in said door frame, the channel member enclosing the other vertical edge being straight when in an unstressed condition, and a continuous sealing strip secured to the rear surface of said flange for engagement with said door frame

---

4,064,656
DEVICE FOR BLASTING LARGE AND BULKY WORKPIECES
Johannes Zeidler, Reinbek, Germany, assignor to Alfred Gutmann Gesellschaft fur Maschinenbau, Hamburg, Germany
Filed June 9, 1976, Ser. No. 694,142
Claims priority, application Germany, June 10, 1975, 2525761
Int. Cl.^{2} B24C *3/06*
U.S. Cl. 51—426 **3 Claims**

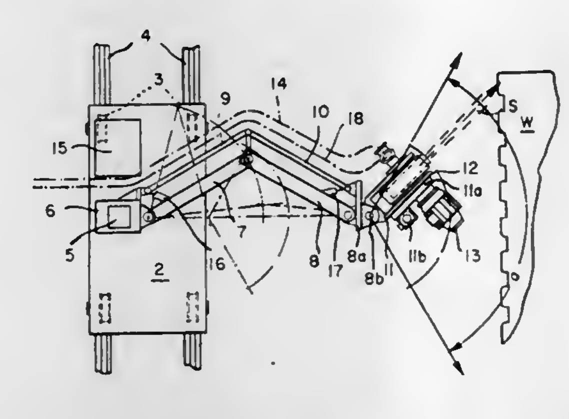

1. Apparatus for blasting particulate material onto workpieces comprising an enclosure within which a workpiece can be positioned, said enclosure having a bottom wall with horizontally disposed rails thereon extending the length of the enclosure, a centrifugal impeller for blasting particulate material onto a workpiece in said enclosure, impeller mounting means including a carriage arranged to travel the length of the enclosure on said rails, motor means mounted on said carriage for driving the carriage on said rails, a vertical column on said carriage, an acticulated arm means pivotally connected at one end to said column for pivotal movement in a horizontal plane and connected at the other end to said centrifugal impeller wheel for supporting the latter, said other end including joints for pivotal movement of said centrifugal impeller about horizontal and vertical axes, said articulated arm means being extensible and contractible for moving the centrifugal impeller laterally away from and toward said column, and means for actuating said articulated arm means and said joints for selectively moving said centrifugal impeller to selected positioning and directing it at selected angles with respect to the workpiece.

4,064,657
MACHINE FOR MACHINING SPIRAL CUTTING EDGES ON CUTTING TOOLS
Robert Habib, 36, Quai Gustave Ador, 1207 Geneva, Switzerland
Filed May 28, 1976, Ser. No. 691,029
Claims priority, application Switzerland, June 6, 1975, 7345/75
Int. Cl.^{2} B24B *19/00*
U.S. Cl. 51—33 W **7 Claims**

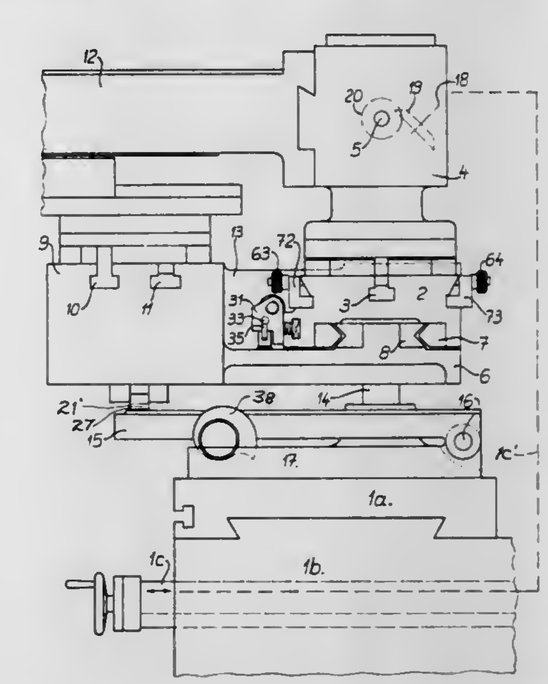

1. A machine for machining a spiral cutting edge on a workpiece having an elongate shank with a rounded head, comprising;

a support unit comprising first and second supports mounted for sliding movement relative to one another and for joint rotation about a vertical axis;

a headstock carried by the first support, the headstock having a spindle for carrying thereon and, coaxially with an axis thereof, a workpiece having a rounded head surface and a cylindrical shank surface smoothly continuing the head surface, the headstock being positionable so that in one position of the headstock, the axis of the spindle intersects the vertical axis;

a device mounted on the second support for helicoidally driving the headstock spindle;

a rotary machining tool;

means for mounting the support unit for vertically translational and horizontally rotational movements thereof, the latter being centered about the vertical axis; and means for simultaneously effecting the vertically translational and the horizontally rotational movements to provide a helicoidal movement of the support unit relative to the machining tool;

whereby the machining tool can machine a spiral cutting edge on the workpiece extending over the rounded head surface and smoothly continuing over the cylindrical shank surface of the workpiece, to produce a round-headed machined tool.

4,064,658
BRUSH ROUNDATOR
John E. Bergman, Huntington Bay; William T. Keeler, E. Meadow, and Patrick J. McKenna, West Babylon, all of N.Y., assignors to Blair Tool and Machine Corporation, College Point, N.Y.
Filed Sept. 9, 1976, Ser. No. 721,726
Int. Cl.^{2} B24B *7/20*
U.S. Cl. 51—110 **12 Claims**

1. A brush roundator for dulling the tips of brush bristles which are mounted on brush backs comprising:

a conveyor for conveying along a straight path said brush

backs having said brush bristles mounted thereon, said conveyor including fastening members for fastening said brush backs to said conveyor with said bristles extending outwardly away from said conveyor;

a plurality of abrasion disc series, each of said abrasion disc series including a plurality of abrasion discs arranged side-by-side, parallel to said conveyor and in the paths of

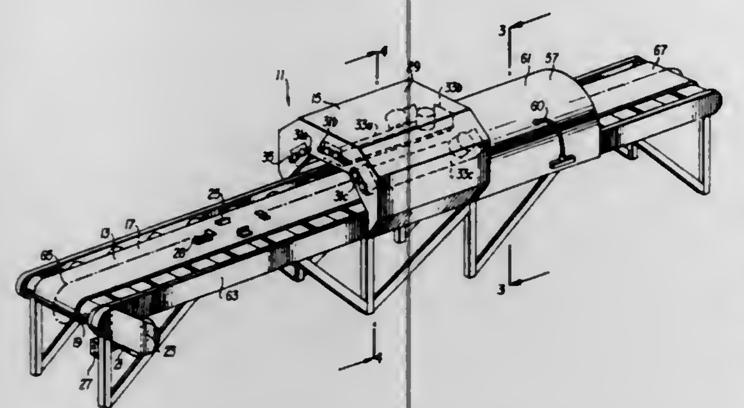

the outer tip portions of said bristles, said discs having axes of rotation;

said plurality of abrasion disc series including a mounting means for arranging said disc series parallel with one another, but allowing them to be angularly displaceable as units from one another about said conveyor so that the disc axes can be adjusted to be approximately parallel with the bristles they are in the paths of.

4,064,659
APPARATUS FOR CENTERING SHEETS OF GLASS ON THE PLATFORM OF A MACHINE
Moreno Ulivi, Pisa, Italy, assignor to Saint-Gobain Industries, Neuilly-sur-Seine, France
Filed Mar. 4, 1976, Ser. No. 664,029
Claims priority, application France, Mar. 4, 1975, 75.06640
Int. Cl.² B24B *19/00*
U.S. Cl. 51—277 **11 Claims**

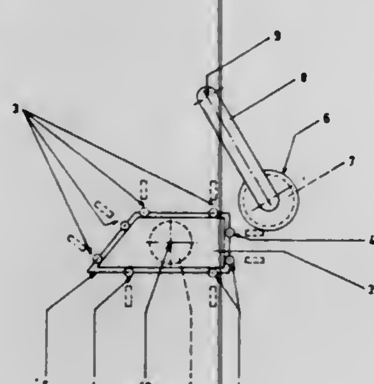

1. Apparatus for centering sheets of glass and the like on the platform of a machine for finishing the edges or surface of the sheet including a plurality of centering pins movable into contact with the sheet at spaced points on the periphery thereof, and drive mechanism for said pins which comprises a frame, a pin-carrying support carrying at least one of the pins and being mounted on the frame for movement between a rest position situated away from the platform at which the pin is turned down below the plane of the sheet on said platform and a second position situated adjacent said platform wherein the pin and support are moved to an upright position so that the pin engages the edge of the sheet, drive means connected to said support for turning said support and pin to the upright position whenever the support is advanced toward said platform and for retracting the support away from the platform, to thereby turn the pin and the support down to their rest position, guide means for guiding said support during said turning, advancing and retracting movements, and adjustable stop means for limiting the advance of said support toward the platform.

4,064,660
PROCESS FOR PREPARING HAZE FREE SEMICONDUCTOR SURFACES AND SURFACES SO MADE
Ingolf Lampert, Burghausen, Germany, assignor to Wacker-Chemitronic Gesellschaft fur Elektronik-Grundstoffe mbH, Burghausen, Germany
Filed Aug. 17, 1976, Ser. No. 715,031
Claims priority, application Germany, Sept. 1, 1975, 2538855
Int. Cl.² B24B *1/00*
U.S. Cl. 51—283 R **7 Claims**

1. A process for preparing haze free 111-oriented gallium arsenide surfaces by polishing, which comprises subjecting the surfaces to the polishng action of (a) an aqueous suspension containing a polishing agent of the group consisting of quartz, silica, a silicate, a fluosilicate and a mixture thereof, having a pH range from 6–8, in mixture with (b) an aqueous solution of 2–15% by weight of hydrogen peroxide likewise having a pH of 6–8.

4,064,661
CENTRIFUGAL BLASTING APPARATUS
Riichi Maeda, 30-1, Kitakata 2 chome, Ichikawa, Chiba, 272, Japan
Filed Apr. 16, 1976, Ser. No. 677,785
Claims priority, application Japan, Apr. 19, 1975, 50-47849
Int. Cl.² B24C *5/06*
U.S. Cl. 51—424 **9 Claims**

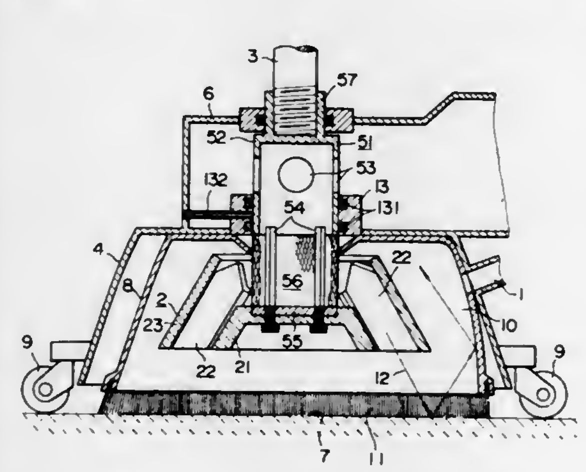

1. A centrifugal blasting apparatus comprising:

a spindle mounted vertically in the apparatus;

a blast wheel having an axis of rotation coinciding with the spindle for rotating with the spindle to blast abrasive particles toward a workpiece; and

means for supplying the blast wheel with the abrasive particles;

said blast wheel comprising a boss and a plurality of vanes fixed to the boss and arranged around the axis of rotation in an equally spaced relation from each other, the vanes each lying in a plane slanting with respect to the axis of rotation at an angle ranging between 25° and 65°, and with respect to an axis perpendicular to the axis of rotation, at an angle ranging between 40° and 80°, the abrasive particles being fed to the top portion of the blast wheel.

4,064,662
COLLAPSIBLE TETRAHEDRAL STRUCTURE
John M. O'Toole, 3771 Las Flores Court, Los Angeles, Calif. 90034
Filed Sept. 29, 1976, Ser. No. 727,960
Int. Cl.² E04B *1/343*
U.S. Cl. 52—71 **18 Claims**

1. A collapsible, rigid lodgment structure comprising:

a generally rectangular rigid blank folded along a first fold

and a second fold, each fold parallel to and spaced approximately one-quarter the longitudinal distance from the rectangle shorter edges, the shorter edges being joined together;

a first bifurcation running diagonally along one substantially quarter blank section defined by the first fold, and a second bifurcation running diagonally along the second quarter blank section defined by the second fold;

a third bifurcation in a center section defined by the first and second folds, the third bifurcation being parallel to the first bifurcation;

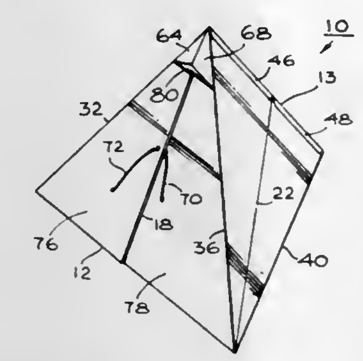

a fourth bifurcation in the center section being parallel to the second bifurcation; whereby, when the first and second folds are flattened so that the blank sections adjacent the folds are placed in a common plane, a tetrahedron is defined; and

means for joining one-half of one of the blank's longitudinal edge with another half of the same longitudinal edge in a substantially weather proof line; whereby upon said joining a tetrahedron is formed.

4,064,663
SHELTER AND METHOD OF MAKING SAME
Charles W. Moss, Mill St., West Rockport, Maine 04856
Filed May 6, 1976, Ser. No. 683,835
Int. Cl.² E04B *1/32*
U.S. Cl. 52—80 **14 Claims**

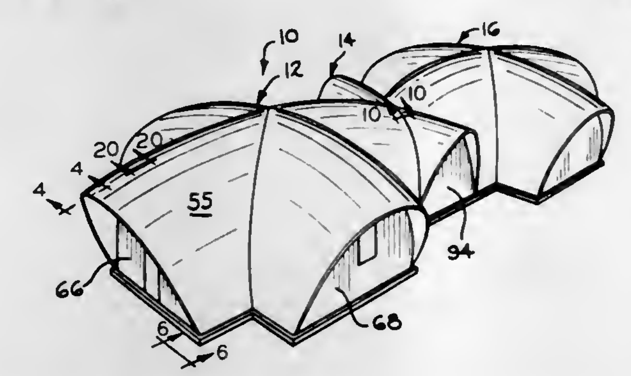

1. A basic shelter module adapted to be used either singly or interconnected with one or more similar modules to form a shelter, comprising a frame mounted on a supporting surface, a flexible fabric cover supported by said frame and defining when distended convex external configurations, a layer of rigid foam material adhered to the outer surface of said cover so as to aid in supporting the distended cover, and a protective waterproof coating adhered to the outer surface of said layer of rigid foam material, said frame including a plurality of relatively rigid arch members arranged to face a common center and rigid base members mounted on the supporting surface so as to define a bottom perimiter of the module, the bottom ends of said rigid arch members being pivotally connected to said base members, said cover being attached at some of its edges to said arch members and attached at the other of its edges of said base members, said frame also including a hub centered between said arch members, and a plurality of relatively rigid transverse members extend respectively between said hub and the apex of each arch member, each of said transverse members including an extension member movably connected therewith and selectively movable to extend and retract the length of said transverse member, said transverse members being extensible to pivot said arch members outwardly to tension said cover during one step of erection of said basic shelter module, each of transverse members being releasable from its associated arch member for optional removal from said module when said rigid foam material has cured following initial application of the foam material onto the cover.

4,064,664
CRYPT STRUCTURE
Michael F. Gaul, 2800 Lake Shore Drive, Chicago, Ill. 60657
Filed Mar. 2, 1977, Ser. No. 773,515
Int. Cl.² E04H *1/04*
U.S. Cl. 52—136 **7 Claims**

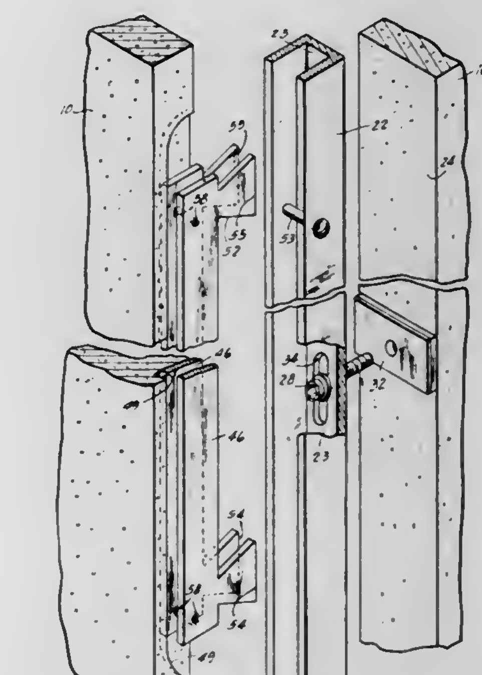

1. In a connecting system in a crypt building structure for retaining a plurality of substantially similar slab elements in position on a generally upright grid composed of a plurality of spaced walls, the combination comprising: vertical channel members vertically and forwardly adjustably connected to the edges of the spaced walls; support means attached to adjacent ones of said channel members for supporting each slab element; at least one crypt cover slab; hanger members attached to opposing vertical side walls of said cover slab at the same reference distance from the front surface of the slab; extending rearwardly of the slab to which the hanger member is attached, vertically spaced protruding reference surfaces on said hanger members cooperating with a vertically extending alignment surface of said channel member to thereby reference said front surface of the slab to the channel member, said support means and hanger member providing a pin and sloping ledge surface connection.

4,064,665
ICE ANCHORING METHOD AND DEVICE
Greg E. Lowe, Ogden, Utah, and Michael R. Lowe, Eldorado Springs, Colo., assignors to Lowe Alpine Systems, Inc., Lafayette, Colo.
Filed July 26, 1976, Ser. No. 708,957
Int. Cl.² E02D *5/74*
U.S. Cl. 52—155 **15 Claims**

1. An ice anchoring device comprising: an elongated member having an at least partially enclosed channel defined therein, the channel being defined with at least two directly opposed walls, the exterior of the member having substantially parallel surfaces in the longitudinal direction, a bevel surface extending substantially inwardly from the exterior of the elongated member at an end thereof to the channel, and a handle connected to the elongated member; whereby, the elongated member may be driven into ice with the bevel surface defining a cutting edge to inwardly fracture the ice between the op-

posed portions of the channel with the fractured ice being removed through the channel, and the exterior surfaces of the

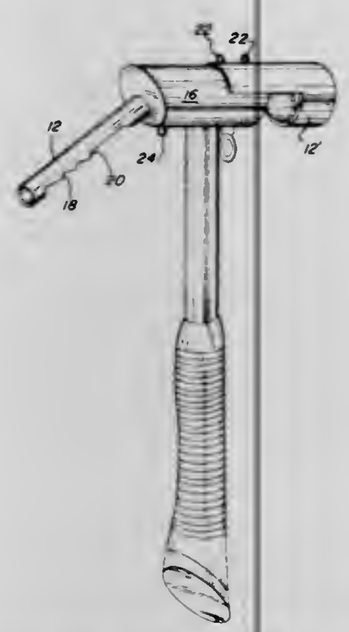

elongated member being thus secured in substantially undisturbed, strong ice.

4,064,666
CONDENSATE ABSORPTION AND EVAPORATION ASSEMBLY
Joe C. Kinlaw, Dallas, Tex., assignor to WindoWik Co., Dallas, Tex.
Filed Aug. 10, 1976, Ser. No. 712,521
Int. Cl.² E06B *7/12*
U.S. Cl. 52—171 **16 Claims**

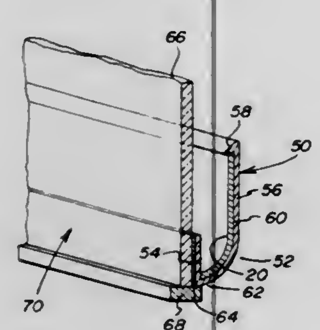

1. A condensate absorption and evaporation assembly comprising:
a trough-shaped frame member disposed subjacent a surface having a flow of condensate, said frame member extending only along that side of the surface having the flow of condensate;
a sheet of absorbent material supported by said frame member, whereby condensate flowing into said frame member is entrained within said frame member and absorbed by and carried upward through the capillary attraction of said absorbent material for the condensate to promote the evaporation of the condensate.

4,064,667
DECORATIVE JAMB STRUCTURE FOR ELEVATOR ENTRANCEWAYS
Reuel A. Seaholm, Arkansas City, Kans., assignor to Montgomery Elevator Company, Moline, Ill.
Filed Aug. 6, 1976, Ser. No. 712,332
Int. Cl.² E06B *1/04*
U.S. Cl. 52—204 **19 Claims**

1. A decorative jamb for a side of an entranceway that extends through a wall between an elevator hatchway and a building corridor having a floor structure, so that the sides of the entranceway are defined by end surfaces of the wall, there being a top cross structure in the entranceway and a sliding door in the hatchway which normally closes said entranceway, said decorative jamb comprising, in combination:
a shroud structure which has a lower end at the floor structure and an upper end at the top cross structure of the entranceway to conceal the end surface of the wall, said shroud structure having two vertical side elements which are joined by recessed connecting web means to define a vertically extending central channel;
removable insert means including core means and decorative sheath means fixed to said core means, said insert means having lower and upper ends which are substantially coterminous with those of the shroud structure;

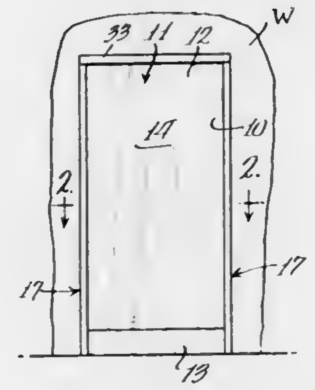

and mounting means detachably securing said removable insert means in said channel with the core means abutting the connecting web means, said mounting means comprising studs fixed to one area of the core means which impale holes in one of the structures, and threaded fasteners in another area of the core means which are captive beneath the decorative sheath means and screw into the connecting web means, there being small holes in the decorative sheath means through which a tool may be inserted to rotate said threaded fasteners.

4,064,668
SUPPORTING PIER WITH TIE-DOWN
Duane L. Carter, 2770 Santa Maria Way, Santa Maria, Calif. 93454
Filed July 9, 1974, Ser. No. 486,748
Int. Cl.² E02D *27/32, 35/00*
U.S. Cl. 52—295 **4 Claims**

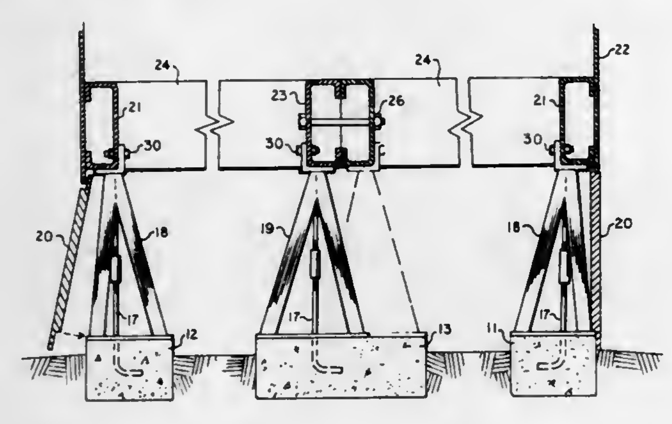

1. A hold-down support for a building comprising:
a. a foundation having upwardly projecting tension members;
b. a pier supported by the foundation and having a downwardly projecting tension member secured to the pier;
c. a building connected to the pier and supported by the pier;
d. and a coupling engaging the foundation tension member and the pier tension member to secure the pier to the foundation and thereby act as a tie-down for the building.

4,064,669
STATIONARY SUPPORTING STRUCTURE
Kjeld Vik, Christian Sindings vei 18, N-1410 Kolbotn, Norway
Continuation of Ser. No. 519,848, Nov. 1, 1974, abandoned. This application Jan. 12, 1976, Ser. No. 648,132
Claims priority, application Norway, May 16, 1973, 732045
Int. Cl.² E04C *3/30;* **E02D** *27/42*
U.S. Cl. 52—299 **13 Claims**

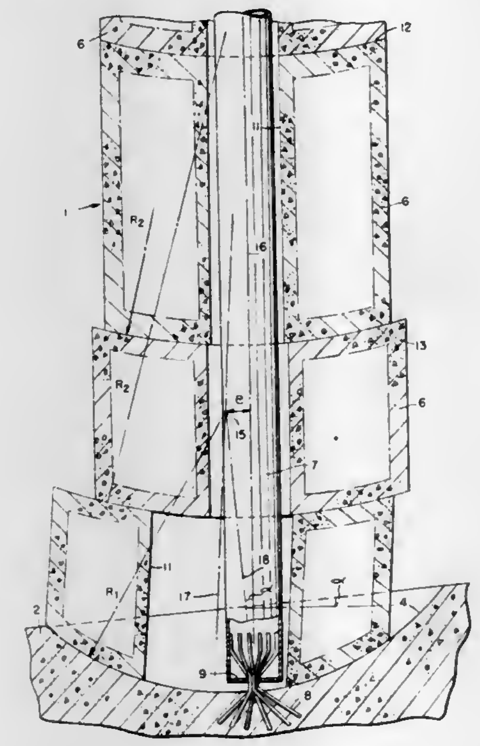

1. Stationary supporting structure comprising at least one column defined by a plurality of annular prefabricated superjacent concrete column elements and vertically central steel tube, said tube having a diameter substantially smaller than the inner diameter of the annular prefabricated column elements to provide a partial linear contact between the tube and the walls of the central aperture of said concrete column elements when said column elements are mounted thereon, said walls and the tube being otherwise spaced from each other, a prefabricated concrete foundation element, said tube being linked to the upper surface of the foundation element, the upper surface of said foundation element and the adjacent ends of each column element having mating minor spherical bearing surfaces allowing disalignment of the axis of said column during erection, said column elements and the tube being locked together to provide a rigid structure by concrete filling the space between the tube and the walls of the central apertures of said column elements.

4,064,670
RAINPROOF LOUVER
Roger A. Lichtenwald, Perrysburg, Ohio, assignor to American Warming and Ventilating Inc., Toledo, Ohio
Filed Oct. 4, 1976, Ser. No. 729,166
Int. Cl.² E08B *7/08*
U.S. Cl. 52—473 **7 Claims**

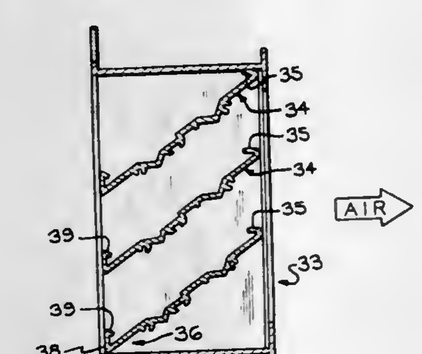

1. In a multiple-blade, substantially rainproof, air flow louver, having a perimeter frame and a plurality of individual, vertically spaced blades extending horizontally across between elements of said frame, and drainage means at at least one end of each of said blades, the improvement consisting of specially configured blades, said blades being positioned with their outer horizontal edges at a level lower than their inner horizontal edges, the main surfaces of said blades extending between said outer and inner edges being interrupted with upward and inward water-flow retarding configurations, the inner-upper edges of said blades having outwardly extending return lips for preventing water flow thereover inwardly thereof, and the outer-lower edges of said blades having water receiving gutter elements communicating with said drainage means at at least one end thereof, each of said gutter elements consisting of a bottom, a vertical flange at the outermost edge of said bottom, and an inwardly extending anti-splash lip at the upper edge of said vertical flange, said lip extending downwardly at an acute angle toward the main surface and overlying said gutter element a sufficient distance substantially to eliminate impingement of water drops from superior blades into said gutter element.

4,064,671
STABILIZER STRUT FOR SUSPENDED CEILING SYSTEM
Gale E. Sauer, Williamsville, N.Y., assignor to Roblin Industries, Inc., Buffalo, N.Y.
Filed June 9, 1976, Ser. No. 694,207
Int. Cl.² E04B *5/52*
U.S. Cl. 52—696 **14 Claims**

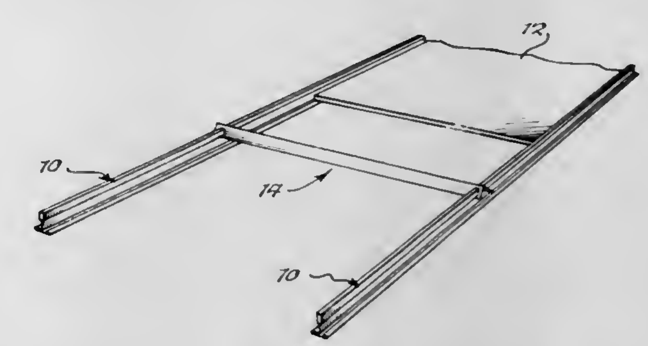

1. In combination with a pair of spaced grid members disposed in a substantially parallel manner with respect to one another, a stabilizer strut for lateral connection between said grid members which form a supporting grid system and the like wherein each grid member includes an upstanding web means surmounted by a bead means extending longitudinally along the upper longitudinal edge of said web means and laterally outwardly of at least one side of said web means, said stabilizer strut comprising:
an elongated body extending between a pair of grid members, said body having a pair of angularly related leg portions at each of its ends in locking engagement with a grid member, each of said pair of leg portions including a pair of aligned slot portions extending inwardly from the non-adjacent, lateral edges of said leg portions wherein only one of said aligned slot portions on each end of said body which correspond to one another includes a locking projection extending beneath said bead means to restrain said strut against vertical uplift with respect to said grid members and the other of said aligned slot portions is of a width so as to be received over said bead means in sufficient lateral engagement therewith to provide stabilized lateral support between a pair of grid members and to maintain said locking projection in place beneath said bead means.

4,064,672

POST-APPLIED WATERSTOP CONNECTION

Robert W. Faid, Westford, and William F. Reinhart, Belmont, both of Mass., assignors to W. R. Grace & Co., Cambridge, Mass.

Filed June 7, 1976, Ser. No. 693,531

Int. Cl.² E04C *3/32*

U.S. Cl. 52—726 **6 Claims**

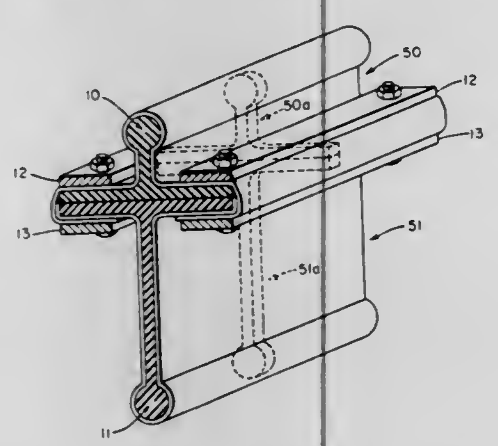

1. A union shell for splicing T-shaped waterstop strips used in a post-applied waterstop assembly, which is made of thin flexible resilient elastomeric material and comprises, in transverse cross-section: (a) two parallel spaced vertical walls joined together at the top by (b) a bulbous tubular portion, each terminated at the bottom by (c) a flat horizontal wing extending away from the base of each said vertical wall, and (d) a relatively short vertical wall attached to the outer edge of each of said horizontal wings and turning downwardly therefrom, said vertical walls defining a longitudinal gap between the terminal ends thereof in order to accommodate said T-shaped waterstop strips, said shell being hollow except for a thin, solid T-shaped baffle centrally located therein having a stem and a base having essentially the same transverse cross-section as the waterstop strips that said shell is designed to splice and being of such dimension and shape so as to fit snugly in the cavity of said shell.

4,064,673

METHOD OF MAKING SHEATHED STICK

Gunter Gerigk, Oberursel; Klaus-Jürgen Bittner, and Armin Köstner, both of Wiesbaden, all of Germany, assignors to Hoechst Aktiengesellschaft, Germany

Division of Ser. No. 586,224, June 12, 1975, Pat. No. 4,013,099. This application Oct. 7, 1976, Ser. No. 730,753

Claims priority, application Germany, Mar. 12, 1975, 2510637

Int. Cl.² B65B *5/00*

U.S. Cl. 53—3 **5 Claims**

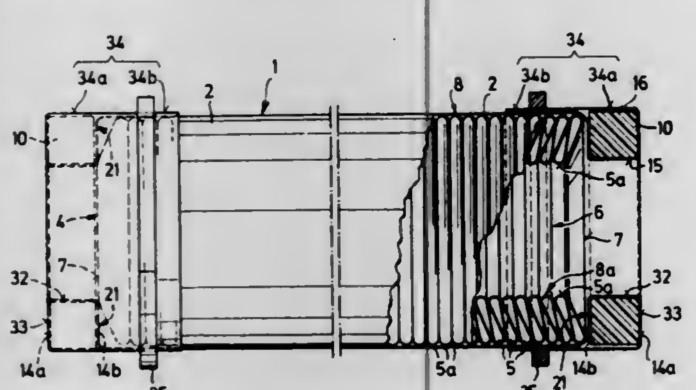

1. A process for the production of a sheathed, hollow, cylindrical stick composed of a flexible tube folded by longitudinal shirring, which comprises inserting a stick composed of a longitudinally folded tube into a section of a jacket of sufficient length that it projects over both ends of said stick,

sliding annular discs over said projecting portions of said jacket until said jacket presses on the front walls of said stick,

and inverting said projecting portions of said jacket outwardly such that said inverted parts are parallel to and closely adjacent the exterior thereof.

4,064,674

DISC RECORD MANUFACTURING METHOD AND APPARATUS

Leonard Palmer, Morristown, N.J., assignor to Lened, Inc., Elizabeth, N.J.

Filed Dec. 22, 1975, Ser. No. 642,974

Int. Cl.² B65B *55/04*

U.S. Cl. 53—23 **19 Claims**

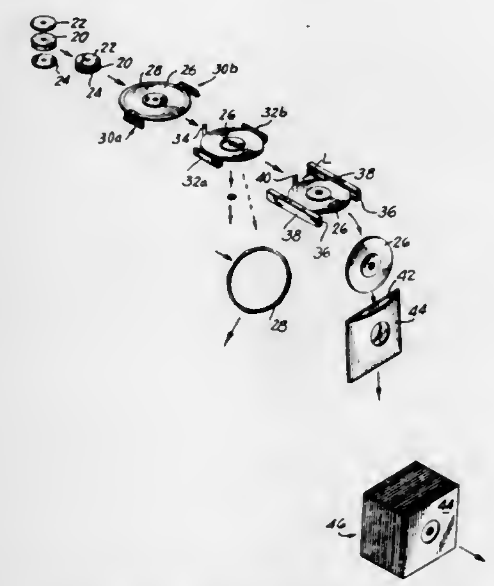

1. In a method for manufacturing a disc record, the steps of pressing, at a press station, a record from a preliminarily formed cake while simultaneously attaching labels to opposed faces of the record and while maintaining the pressed record in a horizontal attitude, with a flash being formed along the periphery of the pressed record at said press station, then transporting the thus-pressed record from said press station to a trimming station whill still maintaining the record at a horizontal attitude, trimming the flash from the record at said trimming station while still maintaining the record at a horizontal attitude, then transporting the thus-trimmed record away from the trimming station to a predetermined location while maintaining the record in a horizontal attitude, then pushing the record along stationary downwardly curved guides to free the record for falling movement under its own weight while simultaneously guiding the record during its falling movement in a manner changing said horizontal attitude into a substantially upright attitude, so that the record while in said substantially upright attitude falls downwardly along a given path, and holding an envelope with an upper open end in the path of falling movement of the substantially upright record so that the record is received in the envelope.

4,064,675

MACHINE FOR OPENING, INSPECTING AND PACKING A FOLDING CARTON

Willis J. Stapp, Clermont County, Miami Township, and Quentin E. Honnert, Cincinnati, both of Ohio, assignors to Multifold-International, Inc., Milford, Ohio

Filed Aug. 16, 1976, Ser. No. 714,562

Int. Cl.² B65B *57/00*

U.S. Cl. 53—54 **10 Claims**

8. A machine for opening a folding carton having spaceable panels and means linking the panels to break improper glue spots and to demonstrate that the carton opens properly which comprises an inspection section, carton conveyor means for engaging one of the panels and for advancing the carton through the inspection section, vacuum cup means engageable with another panel, and means for advancing the vaccum cup means in the direction of advance of the carton in timed rela-

tion with the means for advancing the carton through the inspection section, the path of the vaccum cup means diverging from the path of advance of the means for advancing the

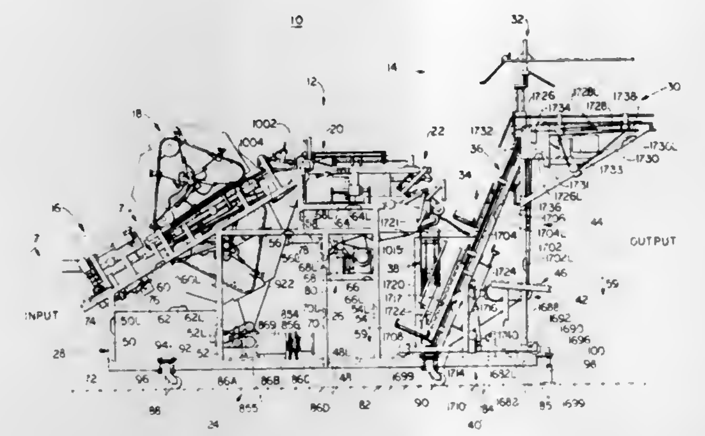

carton through the inspection section as the vacuum cup means and the carton advance through the inspection section, whereby the panels are drawn apart to open the carton.

4,064,676

SKIN PACKAGING MACHINE WITH TRAVELLING VACUUM FRAME

George King, Stouffville, Canada, and James V. Hannon, New Britain, Conn., assignors to Pak-A-Matic, Inc., Berlin, Conn.

Filed May 9, 1977, Ser. No. 795,080

Int. Cl.² B65B *57/16, 31/00*

U.S. Cl. 53—77 **16 Claims**

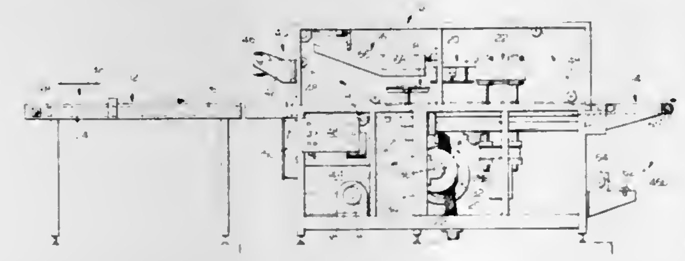

1. In a packaging machine of the type in which a heated film is formed by application of pressure to provide an enclosure for encapsulation of articles disposed on a substrate, the combination comprising:

a. a frame;

b. a conveyor on said frame and including means for advancing substrates between an entrance end and an exit end;

c. a heater disposed above said conveyor at a point intermediate its length;

d. film support and transport means on said frame above said conveyor for advancing film from a point in advance of said heater, under said heater and thence along and adjacent said conveyor;

e. pressure forming means movably supported on said frame for reciprocal movement along said conveyor from adjacent said heater to a point spaced therefrom and including means for forming the heated film by application of pressure;

f. cutting means movably supported on said frame for reciprocal movement along said conveyor adjacent said exit end thereof;

g. drive means synchronously driving said conveyor and film transport means and also said pressure forming means and said cutting means in their movement toward said exit end of said conveyor, said drive means returning said pressure forming means and cutting means in the opposite direction, said drive means further causing said pressure forming means to engage the film to effect forming thereof and causing said cutting means to engage the film to effect severing thereof into units, and said drive means effecting release of the engagement of the forming means and cutting means after movement in the direction of the exit end of said conveyor for reciprocal movement in the opposite direction; and

h. control means for operating said drive means to effect engagement and disengagement of said pressure forming means and cutting means and to effect movement of said pressure forming means and cutting means in the direction of said exit end upon engagement and movement in the opposite direction after disengagement.

4,064,677

MICROFILM INSERTER

Yutaka Takahashi; Yoshio Hakamata, both of Tokyo, and Masamitu Konno, Hino, all of Japan, assignors to Fuji Photo Film Co., Ltd., Minami-ashigara, Japan

Filed Feb. 18, 1977, Ser. No. 770,041

Claims priority, application Japan, Feb. 20, 1976, 51-17513

Int. Cl.² B65B *61/06*

U.S. Cl. 53—123 **8 Claims**

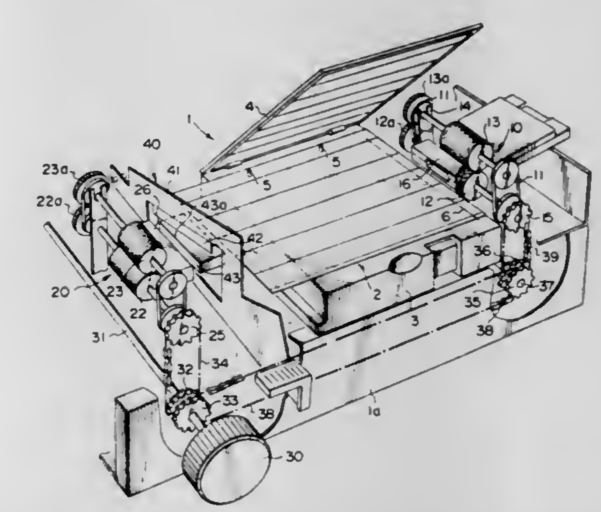

1. A microfilm inserter comprising a table for retaining a microfilm jacket in a fixed position, first feed rolls located at one end of said table for inserting a microfilm strip into an insertion slot in said jacket, second feed rolls located at the other end of said table for further transporting said film strip after it emerges from the exit of said jacket, means for driving said first and second feed rolls, means for detecting the trailing edge of said film strip, and means for cutting off the leading portion of said film strip along the exit of said jacket when the detecting means detects the trailing end of said film strip.

4,064,678

APPARATUS FOR DRAWING A SIDE-FOLDED TUBE OVER PILED OBJECTS

Diethelm Grocke, Nurnberg, Germany, assignor to Nutro Patentverwertungs-und Maschinen-Handels GmbH, Nurnberg, Germany

Filed Nov. 2, 1976, Ser. No. 738,046

Claims priority, application Germany, Nov. 4, 1975, 2549251

Int. Cl.² B65B *43/34*

U.S. Cl. 53—183 **8 Claims**

7. Apparatus for drawing a side-folded tube in flatly pressed form from above over objects piled on a base, the tube having two pairs of side-folds, comprising welding and separating means for the side-folded tube, side-fold guiding means for moving apart the side-folds of each pair of folds, said guiding means being formed by four pairs of driven clamping rollers

each associated with and in continuous engagement with a respective side-fold, and tube-engaging devices associated with

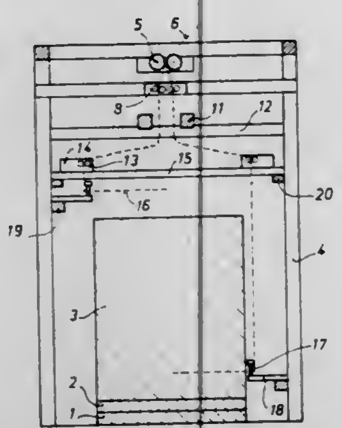

the four side-folds of the tube below said rollers for opening the tube and drawing it down over said piled objects.

4,064,679
COMBINATION LAWN MOWER, SNOW BLOWER AND LAWN SWEEPER
David Spinner, Willowdale, Canada, assignor to Unisette Realty Ltd., Willowdale, Canada
Filed Apr. 16, 1976, Ser. No. 677,631
Claims priority, application Canada, May 21, 1975, 227451
Int. Cl.² A01D *53/00, 51/00, 35/24*
U.S. Cl. 56—2 **7 Claims**

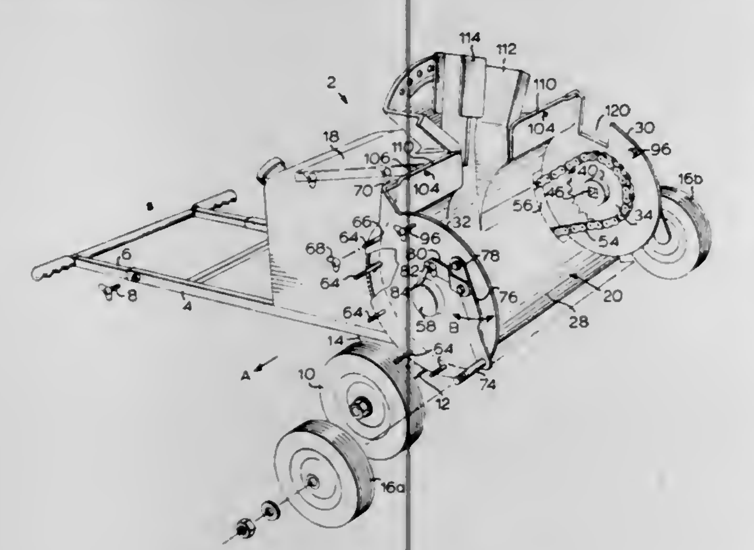

1. A multi-use lawn care machine comprising:
a. a tool housing comprising a back plate, a first fixed side plate closing one side of said housing, and a second side plate closing the other side of said housing,
b. a pair of wheels, one mounted on said first side plate and one mounted on said second side plate,
c. a rotary attachment tool in said housing, said attachment tool having a central longitudinal axis of rotation, and first and second ends aligned with said axis,
d. drive means mounted on said first side plate and supporting and driving said first end of said tool, said first end of said tool and said drive means containing co-operating means for transmitting rotary drive motion from said drive means to said tool and for permitting disconnection of said first end of said tool from said drive means in a lateral direction towards said second end,
e. means removably connecting said second side plate to said housing for disconnection of said second side plate from said housing in a laterally outward direction,
f. said second side plate including bearing means aligned with said axis and rotatably supporting said second end of said tool, said bearing means being removable from said second end of said tool in a laterally outward direction to permit said lateral disconnection of said second side plate,
g. and means for applying power to said drive means; whereby said tool may be changed by removing said second side plate, with said second wheel thereon, from said housing in said laterally outward direction and then removing said tool in the same direction from said housing.

4,064,680
CORDLESS TWIN BLADE LAWNMOWER CONSTRUCTION
Donald Earl Fleigle, Middle River, Md., assignor to The Black and Decker Manufacturing Company, Towson, Md.
Filed Aug. 8, 1975, Ser. No. 603,250
Int. Cl.² A01D *55/18*
U.S. Cl. 56—11.9 **4 Claims**

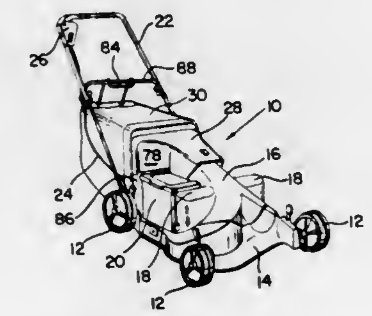

1. In a power lawnmower of the type including a housing and a cutting blade adapted to be rotated in a cutting plane within said housing, the improvement comprising a shroud member within said housing disposed above a part of the path of the outer end of said blade, said shroud comprising a semi-cylindrical vertical wall extending circumferentially within the forward portion of said housing at a distance equal to the radius of said blade from the center of rotation of said blade, said wall being located closely adjacent the path of movement of said blade tip and and vertically above said path; a space within said housing disposed ahead of said shroud relative to the normal direction of movement of said mower so that uncut grass is drawn substantially upright by air flow within said mower before it is cut by said blade.

4,064,681
MACHINE FOR REMOVING FOLIAGE FROM ROOT CROPS
Nils Bertil Glifberg, Staffanstorp, Sweden, assignor to Svenska Sockerfabriks AB, Malmo, Sweden
Filed Aug. 29, 1975, Ser. No. 609,122
Int. Cl.² A01D *23/02*
U.S. Cl. 56—121.45 **5 Claims**

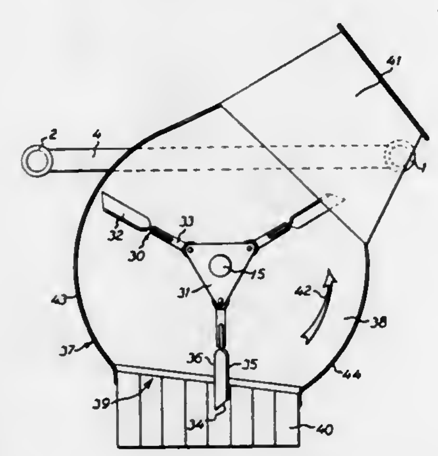

1. A machine for removing foliage from root crops, said machine comprising, a stripping wheel having a plurality of approximately radially extending elongated wings having propeller blade-like pitch and supported for rotation about an axis which extends substantially in the direction of travel of the machines, said stripping wheel being disposed in a casing which as viewed in the direction of travel of the machine is open at the front and closed at the rear by a vertical rear wall, said casing having generally arcuate side walls provided with a lower opening through which the wings of the stripping wheel extend to contact the foliage of the root crops, said side walls having a laterally offset upper discharge opening for the foliage severed from the root crops, an upwardly extending discharge pipe connected to said discharge opening and having its center line oriented generally radially with respect to said stripping wheel, and means for rotating said stripping wheel in a direction moving the wings of said wheel upwardly throughout its movement from the lower casing opening (39) to the upper discharge opening of the casing so as to mvoe the shorter way from the lower casing opening to the upper discharge opening.

4,064,682
MACHINE FOR HARVESTING ASPARAGUS STALKS AND THE LIKE
Spencer Kim Haws, Star Rte., Mesa, Wash. 99343
Filed Aug. 23, 1976, Ser. No. 716,895
Int. Cl.² A01D *45/00*
U.S. Cl. 56—327 A **32 Claims**

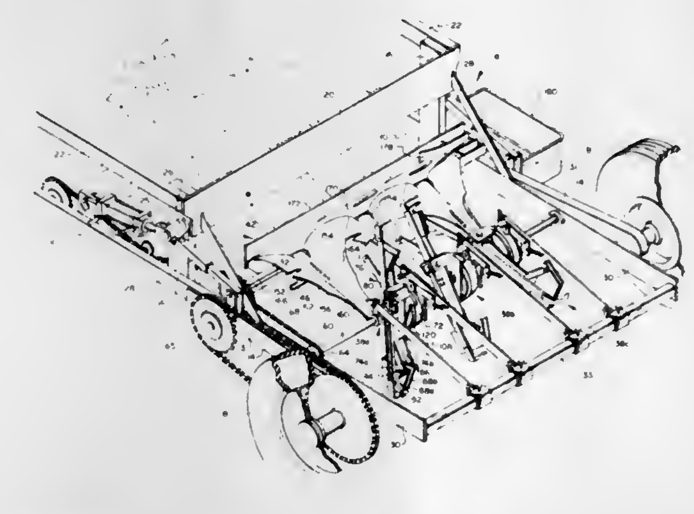

1. A machine for harvesting crops which grow in stalks or the like comprising
a frame adapted to be moved along the ground, and
a cutting assembly mounted on the frame to selectively rotate downwardly toward the ground to a cutting position adjacent a selected stalk and then upwardly away from the cutting position, said cutting assembly including
a hub means mounted on said frame to selectively rotate about a generally horizontal axis,
first and second arms carried by and extending outwardly of the hub means in a generally side by side relationship,
a cutter element extending generally laterally from the outer end of the first arm for cutting the stalks as the cutting assembly is rotated through the cutting position,
first and second holding pads mounted respectively on said first and second means in a generally face to face relationship,
said hub means being positioned so that as it is rotated the arms move in a generally vertically disposed path, said arms being mounted at the ends thereof to pivot transversely of said path, and
means for causing said arms to move together to cause the holding pads to grasp a stalk therebetween when the cutting assembly rotates to a cutting position and then to carry the stalk upwardly as the cutting assembly rotates upwardly.

4,064,683
CONTINUOUS MECHANIZED HARVESTING OF HORTICULTURAL CROPS
Bernard R. Tennes, Charlotte, and Clyde L. Burton, East Lansing, both of Mich., assignors to The United States of America as represented by the Secretary of Agriculture, Washington, D.C.
Filed May 14, 1976, Ser. No. 686,423
Int. Cl.² A01D *46/00*
U.S. Cl. 56—328 TS **6 Claims**

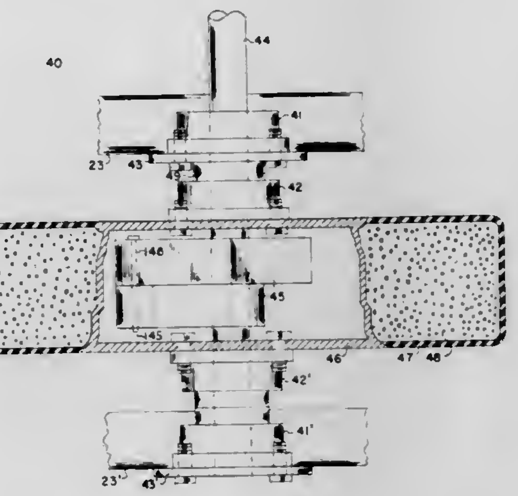

1. A mechanical shaker assembly apparatus adapted for attachment to a power frame for continuous harvesting of horticultural fruits comprising:
a first supporting frame means and a second supporting frame means;
a shaker unit secured to each of said first and said second supporting frame means, each of said shaker units comprising a shaker pad, a shaker pad supporting means, a motor-driven rotatable shaft, a first set of bearing means and a second set of bearing means, said pad supporting means and said supporting frame means being journalled to said shaft by said first and second sets of bearing means, respectively, said shaker unit further comprising at least one offset inertial weight secured to said shaft for rotation therewith; and
a means secured to said first supporting frame means for forcing each of said shaker unit pads into frictional engagment with the other of said pads, said forcing means equipped with an expansion means to permit passage of plant trunks between said frictionally engaged pads.

4,064,684
FALSE TWISTING UNIT
Jan Nijhuis, Hengelo, Netherlands, assignor to Hollandse Signaalapparaten B.V., Hengelo, Netherlands
Filed July 22, 1975, Ser. No. 598,013
Claims priority, application Netherlands, Aug. 21, 1974, 7411139
Int. Cl.² D01H *13/30, 7/92;* **D02G** *1/04*
U.S. Cl. 57—35 **9 Claims**

1. A false twister comprising a body having a passage therethrough for passing a strand, said passage having a substantially cylindrical portion surrounded by a first cavity, first channel means for supplying compressed air to said first cavity, said cavity communicating with said portion through tangential air ducts having mouths opening into said portion for producing a rotating air column; a second cavity surrounding said passage; and second channel means comprising said second cavity and liquid ducts communicating from said second cavity tangentially to said passage for supplying liquid to said passage near the mouths of said ducts.

4. A method of applying liquid to a strand, comprising:
a. passing the strand through a passage in a false twister,
b. applying air through tangential air ducts in said false

twister to provide a rotating air column in said passage, and

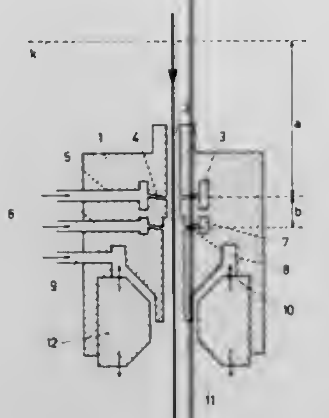

c. applying the liquid through separate tangential ducts opening into the passage near the tangential air ducts.

4,064,685
PREFORMING APPARATUS FOR WIRES IN STRANDING MACHINES
Hans-Joachim Polke, Werdorf, Germany, assignor to W. H. Kuester K.G., Germany
Filed Sept. 22, 1976, Ser. No. 725,458
Claims priority, application Germany, Apr. 28, 1976, 2618586
Int. Cl.² D07B *3/00, 7/00*
U.S. Cl. 57—55 **13 Claims**

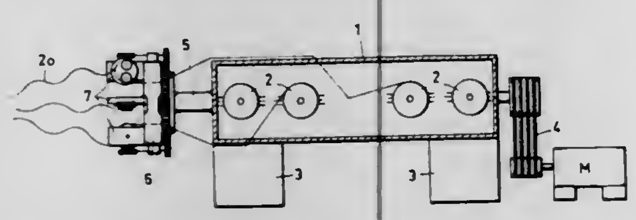

1. A preforming apparatus for preforming the wires in a stranding machine, the apparatus comprising:
a. a base plate mountable on said stranding machine to be rotatable about the machine axis;
b. carrier means mounted on said base plate;
c. first and second rollers arranged on each carrier means to be rotatable about axes substantially perpendicular to and spaced from the machine axis, the axis of rotation of at least one of said rollers on each carrier means being adjustable in position relative to the other roller, said carrier means together with said preforming rollers defining individual preforming devices;
d. adjusting drive means mounted on said carrier means for effecting adjustment of said adjustable rollers; and
e. drive means mounted on said base plate and operable to simultaneously operate all said adjusting drive means.

4,064,686
INTERMITTENTLY BULKED YARN
Robert L. Whitted, Rte. 7, N. Parker Road, Greenville, S.C. 29609, and James E. Simmons, Rte. 1, Marietta, S.C. 29661
Continuation-in-part of Ser. No. 553,838, Feb. 2, 1975, abandoned. This application Feb. 9, 1976, Ser. No. 655,671
Int. Cl.² D02G *3/24, 3/34, 1/16*
U.S. Cl. 57—140 J **3 Claims**

1. A bulk yarn formed from a plurality of multifilament yarns comprising:
alternating compact and open segments of yarn;
said compact segments including first and second plaited portions of said multifilament yarns;
said first and second plaited portions being twisted in opposite directions, and

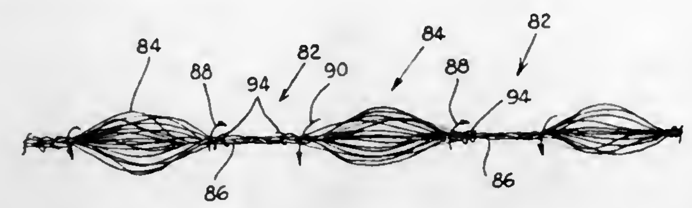

said open segments of said yarn being defined by loosely bundled multifilament yarns having a greater cross-section than said compact segments.

4,064,687
DIGITAL DISPLAY TYPE TIMEPIECE
Toshio Kashio, Tokyo, Japan, assignor to Casio Computer Co., Ltd., Tokyo, Japan
Filed Aug. 5, 1975, Ser. No. 602,112
Claims priority, application Japan, Aug. 10, 1974, 49-91890
Int. Cl.² G04B *19/24;* G04C *21/32;* G08B *23/00*
U.S. Cl. 58—4 A **7 Claims**

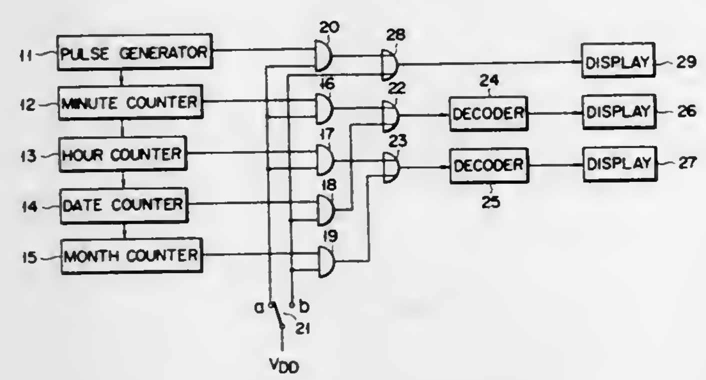

1. A digital display type timepiece comprising:
oscillator means for generating reference signals;
time counting means for counting the reference signals for time display;
means for effecting a date counting by counting carry signals from said time counting means;
means for normally receiving output signals from said time counting means, which signals represent the always changing time, so as to normally effect a time display at a 2-digit decimal numeral figure display section divided in a manner to correspond to an hour and a minute display with a dividing display mark therebetween;
a first control means for visually flashing said dividing display mark at a rate of one cycle per second while said means for normally receiving output signals is effecting the time display;
a manually operable switching means for effecting a switch from a time display to a date display by coupling the output of said date counting means to said decimal display section in place of the output of said time counting means; and
a second control means for switching the complete display mark from its flashing state to another state different from its flashing state during the switching of said manually operable switching means to display the date, so as to visually distinguish between a date display and a time display.

4,064,688
TOUCH SENSITIVE ELECTRODE ASSEMBLY FOR SOLID STATE WRISTWATCHES
Takehiko Sasaki, Yamatokoriyama, and Tsutomu Nakamura, Akashi, both of Japan, assignors to Sharp Kabushiki Kaisha, Osaka, Japan
Filed Mar. 5, 1976, Ser. No. 664,282
Claims priority, application Japan, Mar. 6, 1975, 50-27861; Mar. 6, 1975, 50-31016[U]
Int. Cl.² G04B *19/30;* H01H *35/00*
U.S. Cl. 58—50 R **13 Claims**

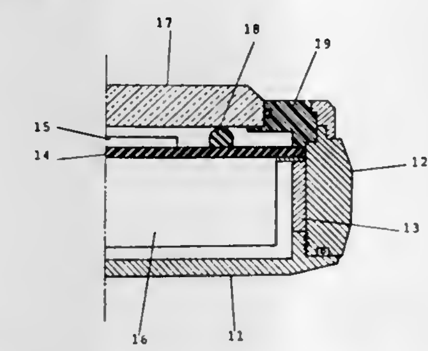

12. A touch sensitive switch assembly for a solid state wristwatch comprising:
an enclosure of said solid state wristwatch for engagement with the wrist of a wearer, said enclosure comprising electrically conductive material for serving as one electrode of said touch sensitive switch;
a front glass sheet received within said enclosure and having a viewing window therein;
an insulating member supporting said front glass sheet in said enclosure for providing electrical isolation therebetween; and
display means provided beneath the viewing window and accomodated within said enclosure;
said front glass sheet being pervious to light emission emerging from said light emitting display;
said front glass sheet comprising electrically conductive glass material having a resistivity less than several hundred KΩcm.

4,064,689
ELECTRONIC TIMEPIECE WITH ELECTRO-OPTICAL DISPLAY
Tetsuya Yasuda, Tokyo; Yoshio Iinuma, Higashi-murayama; Yuzo Maekawa, Fuchu; Toshikiyo Kato, Sayami, and Masaru Yoshida, Kodaira, all of Japan, assignors to Citizen Watch Co., Ltd., Tokyo, Japan
Continuation-in-part of Ser. No. 490,060, July 19, 1974, abandoned. This application Apr. 7, 1976, Ser. No. 674,842
Claims priority, application Japan, July 20, 1973, 48-85811
Int. Cl.² G04B *19/30*
U.S. Cl. 58—50 R **20 Claims**

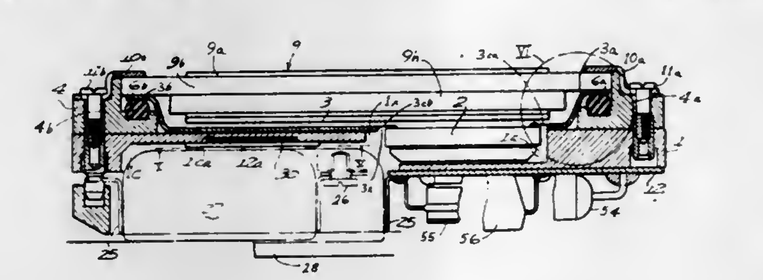

7. An electronic timepiece comprising:
a substrate with substantially parallel front and rear sides;
electro-optical display means adjacent said front side provided with electrode leads for generating a variable time indication;
a first flexible printed sheet overlying said substrate at said front side and carrying a wiring pattern with first conductors contacting said electrode leads;
a second flexible printed sheet overlying said substrate at said rear side and carrying a wiring pattern with second conductors respectively connected to said first conductors;
an electric battery supported on said substrate adjacent said rear side; and
control means in circuit with said battery for selectively energizing said electrode leads by way of said first and second conductors, said control means being supported on said substrate adjacent said rear side through the intermediary of said second printed sheet.

4,064,690
GAS TURBINE POWER PLANT
Sven-Olof Kronogard, Lomma, Sweden, assignor to United Turbine AB & Co., Sweden
Continuation-in-part of Ser. No. 471,176, May 17, 1974, Pat. No. 3,943,703. This application Dec. 5, 1975, Ser. No. 638,052
Int. Cl.² F02C *3/10, 7/02*
U.S. Cl. 60—39.16 R **4 Claims**

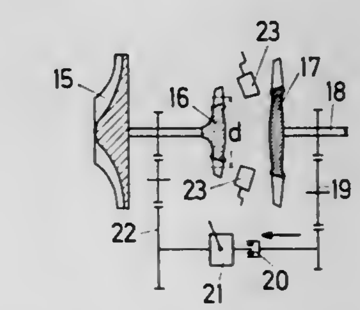

1. In a gas turbine power plant comprising a compressor, a first turbine rotor mounted upon the same shaft as, and imparting rotary movement to said compressor, at least one further turbine rotor mounted upon a shaft separate from that of the said first turbine rotor and compressor rotor combination, and at least one combustion chamber having fuel supply means, receiving air from the compressor and supplying combustion gas to said first and at least one further turbine rotor, the improvement, that the fuel supply means are adjustable to make the combustion chamber issue gases having temperatures above 1000° C, that at least the vanes of said first turbine rotor are manufactured from ceramic material and that the diameter of said first rotor is smaller than that required to produce the power necessary to drive the compressor, and means for mechanically supplying the additional driving power necessary to provide the total required compressor work, said means including a variable transmission between said further rotor and said first turbine rotor.

4,064,691
COOLING OF FASTENER MEANS FOR A REMOVABLE FLAMEHOLDER
Dudley O. Nash, Cincinnati, Ohio, assignor to General Electric Company, Cincinnati, Ohio
Filed Nov. 4, 1975, Ser. No. 628,749
Int. Cl.² F02C *7/22*
U.S. Cl. 60—39.06 **7 Claims**

1. A flameholder apparatus for disposition within a combustible gas stream comprising:
a gutter for holding a flame;
a heat shield disposed within said gutter and upon a surface thereof, said heat shield forming a cavity having a cooling aperture through said gutter in communication with, and generally aligned with, the upstream gas stream; and
means for fastening said gutter to a support member, said fastening means being partially recessed within said heat shield cavity; wherein
said fastening means is cooled by a portion of the gas stream passing through said cooling aperture; and

the size of said cavity and the size of said cooling aperture are such that the velocity of the cooling portion passing

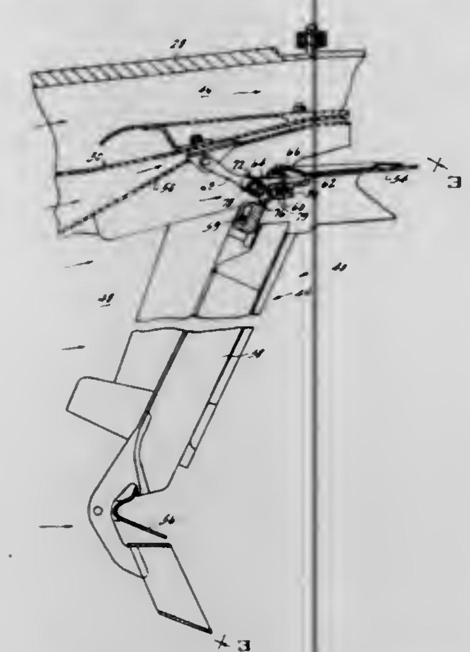

between said fastening means and said heat shield is at least as great as the flame propagation velocity.

4,064,692
VARIABLE CYCLE GAS TURBINE ENGINES
James Edward Johnson, Hamilton; Tom Foster, and Roy Duncan Allan, both of Cincinnati, all of Ohio, assignors to The United States of America as represented by the Administrator of the National Aeronautics and Space Administration, Washington, D.C.
Filed June 2, 1975, Ser. No. 583,056
Int. Cl.[2] F02K *3/06, 1/12*
U.S. Cl. 60—261 **11 Claims**

1. A gas turbine engine comprising:
an inner nacelle circumscribing a core engine, low pressure turbine and afterburner in respective serial flow relation wherein the inner nacelle extends downstream of the afterburner to define an inner nozzle for exhausting the core engine gas flow;
an outer nacelle circumscribing the inner nacelle and spaced apart therefrom to form an outer bypass duct around the core engine and wherein the outer nacelle extends upstream of the inner nacelle to form an inlet for the engine and downstream of the inner nozzle to form an outer nozzle for exhausting the bypass and core engine gas flows;
a fan disposed in the inlet upstream of the core engine and driven by the low pressure turbine for compressing inlet gas flow to the bypass duct and core engine;
flow passage means disposed through the inner nacelle intermediate the low pressure turbine and afterburner for injecting the bypass duct flow into the core engine exhaust such that the combined flows are directed through the afterburner;
valve means for selectively obtruding and unobtruding the flow passage means whereby the engine may be operated as a high bypass turbofan when said flow passage means is obtruded and as low bypass mixed flow augmented turbojet when said flow passage means is unobtruded, and
flap means pivotally hinged to the downstream end of the inner nacelle for simultaneously varying the area of the inner exhaust nozzle and the exhaust area of the other bypass duct, wherein the flap means is movable to a position to abut the outer nacelle such that gas flow through the outer bypass duct is obtruded.

4,064,693
SECONDARY AIR SUPPLY SYSTEM FOR INTERNAL COMBUSTION ENGINES
Norio Shibata, Susono, Japan, assignor to Toyota Jidosha Kogyo Kabushiki Kaisha, Toyota, Japan
Filed June 4, 1976, Ser. No. 693,126
Claims priority, application Japan, Feb. 24, 1976, 51-19186
Int. Cl.[2] F02B *75/10;* **F01N** *3/10*
U.S. Cl. 60—290 **8 Claims**

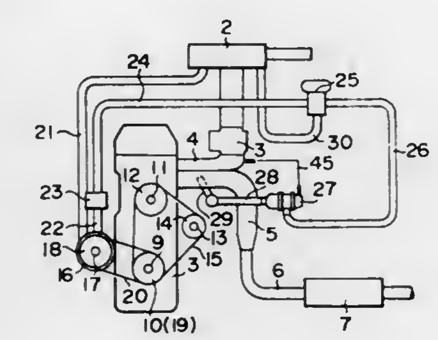

1. A secondary air supply system for an internal combustion engine comprising a passage means for conducting secondary air to the exhaust system of the engine, and a check valve provided in the midst of said passage means for allowing air to flow only toward said exhaust system, said check valve comprising a valve element which opens the valve when air pressure difference above a predetermined level exists across the valve and a control means which controls said predetermined level in accordance with intake air flow rate of the engine in a manner to lower said level as the intake air flow rate increases.

4,064,694
CHARGING AN ACCUMULATOR BY A HEAT ENGINE
Patrice Baudoin, Boulogne-Billancourt, France, assignor to Regie Nationale des Usines Renault, Boulogne-Billancourt, France
Filed Nov. 4, 1976, Ser. No. 738,958
Claims priority, application France, Nov. 6, 1975, 75.33909
Int. Cl.[2] F15B *1/02;* **F16H** *39/46*
U.S. Cl. 60—413 **9 Claims**

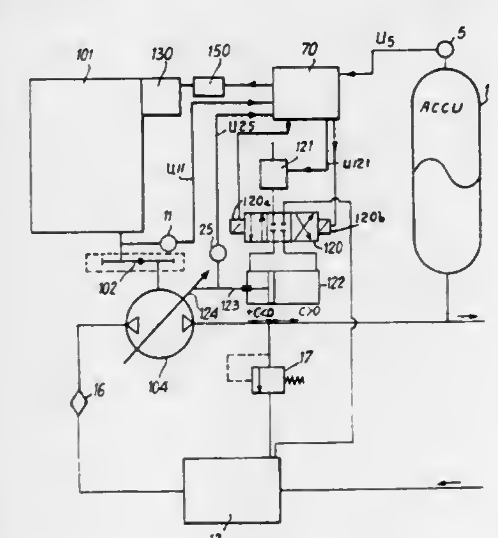

1. A method of regulating the pressure in an accumulator to obtain a pressure therein which lies between two predetermined values using a variable-displacement pump driven by an internal combustion engine to charge the accumulator, the method comprising the following steps:
sensing and generating a signal representative of the pressure within the accumulator;
placing the engine in an operable condition when the sensed pressure drops to a value below the lower of the two predetermined values and adjusting the pump to have a negative displacement so that it operates as a motor driven by fluid under pressure from the accumulator thereby driving the engine until the engine reaches a speed at which it is self-sustaining;
increasing the displacement of the pump until it reaches a positive value after the engine has reached the self-sustaining speed thereby loading the engine;
controlling the displacement of the pump to maintain the speed of the engine at or about a predetermined value; and
placing the engine in an inoperable condition and adjusting the pump to have zero displacement when the sensed pressure in the accumulator exceeds the higher of the two predetermined values.

4,064,695
STARTER/BLOWER MOTOR
John E. Bradley, Inkster, Mich., assignor to Ford Motor Company, Dearborn, Mich.
Filed Dec. 22, 1976, Ser. No. 753,346
Int. Cl.[2] F02G *1/04*
U.S. Cl. 60—517 **4 Claims**

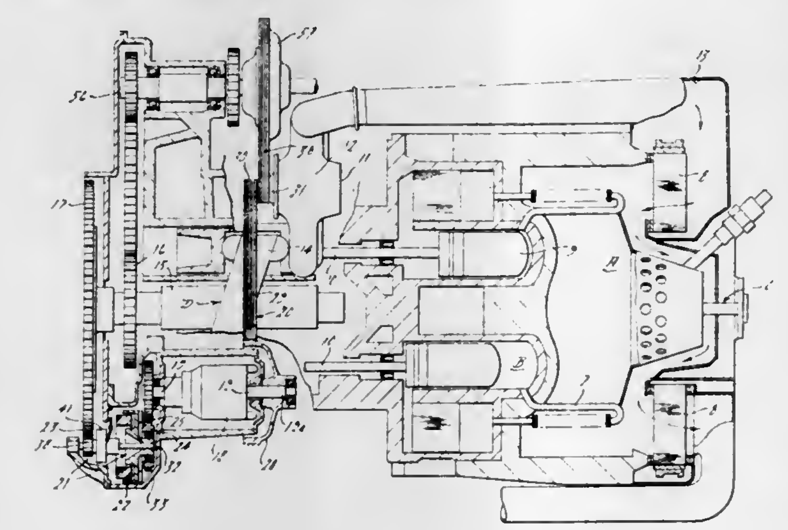

1. A drive system for a Stirling engine having an external heating circuit with a compressor for injecting air thereinto, and a thermodynamic cycling system for converting energy derived from said heating circuit into mechanical motion and for extracting work energy by way of a driven output means, said drive system comprising:
a. a motor driven independently of said engine and having a driven shaft,
b. means drivingly connecting said driven shaft to the compressor for a period of time during which the engine is started from a cold condition,
c. means selectively connecting said driven shaft to said driven output means for driving the latter during only an intermediate portion of said period during which the engine is started from a cold condition, said selectively connecting means having intermeshable gear elements relatively movable for interrupting the selectively connecting means, said selectively collecting means having a gradually engagable friction coupling for interrupting drive through said selectively connecting means, and said selectively connecting means further having an actuator effective to sequentially first establish intermeshing of said gear elements and secondly establish drive engagement through said friction coupling.

4,064,696
LIVE-GAS CONDUIT SYSTEM FOR TURBOCHARGED SIX-CYLINDER ENGINES
Gyula Cser, Budapest, Hungary, assignor to Autoipari Kutato Intezet, Budapest, Hungary
Filed May 11, 1976, Ser. No. 685,366
Claims priority, application Hungary, May 13, 1975, CE 339
Int. Cl.[2] F02B *37/04*
U.S. Cl. 60—598 **9 Claims**

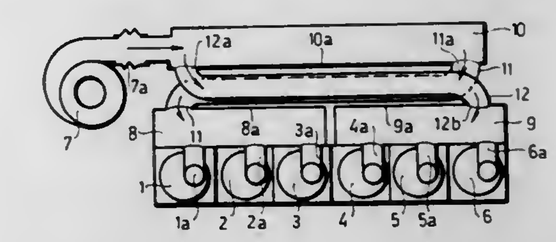

1. A multi-space live-gas conduit system for six-cylinder, serially arranged internal-combustion piston engines, said cylinders having suction inlets, and including a turbocharger associated with said cylinders; the system being linked between said suction inlets and said tubrocharger, and comprising: two separate resonance tanks, each attached to said suction inlets of three adjoining cylinders, said tanks having a volume larger than half of the stroke volume of said three cylinders but smaller than the tenfold thereof; a resonance tube for each tank, adjoining outlet openings of the latter, and having lengths of their center lines which are at least eight times that of the diameter of a circle having the cross-section of said tubes; and a damping tank that links inlet openings of said tubes with the pressure side of said turbocharger; said tubes respectively interconnecting said resonance tanks with said damping tank; said tanks and said tubes being all successively disposed along the longitudinal axis of the engine; wherein the characteristic longitudinal extensions of said tanks and of said tubes all have the same direction; and further comprising a connection from each resonance tube that opens into one of said resonance tanks that is farther away from the respective inlet opening of said tube.

4,064,697
ROTARY ENGINE
Michael Torquato, 2425 Edgebrook Ave., Pittsburgh, Pa. 15226
Continuation-in-part of Ser. No. 531,678, Dec. 11, 1974, abandoned. This application Aug. 13, 1976, Ser. No. 714,112
Int. Cl.[2] F02G *3/00;* **F02C** *5/06*
U.S. Cl. 60—624 **2 Claims**

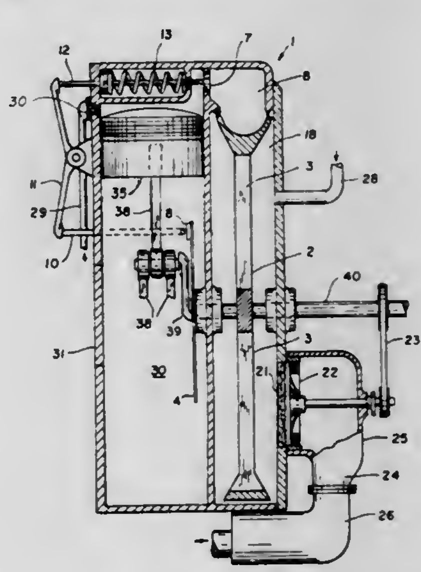

1. A rotary engine comprising a rotor driven by at least three radially extending pistons reciprocating in corresponding stationary cylinders, said pistons being connected by crank arms to a rotor shaft, each cylinder being supplied by fuel and air from a carburetor through a one-way valve, a stator having a

corresponding number of peripherally spaced combustion chambers located adjacent the radially outward extremities of the cylinders, one combustion chamber for each cylinder each combustion chamber including an inlet valve located at the extremity of the associated cylinder, cam means mounted on said rotor, means for adjusting the position of said cam means about the axis of said rotor, means mounted on said stator and operated by said cam means to open each valve upon each rotation of said rotor, a plurality of peripherally disposed vanes of progressively decreasing size on the periphery of said rotor defining pockets of varying sizes, an exhaust port in each pocket leading to the interior of said rotor, a spark plug at each inlet valve for igniting the fuel in said combustion chambers each time that the outlet of each chamber confronts said pockets defined by said vanes to provide successive power thrusts, the outlet of each of said chambers being in sealing engagement with the outermost tips of said vanes, a partition forming a separate enclosure for a portion of said rotor in said stator, and an exhaust fan in said separate enclosure which is driven by said rotor shaft for drawing exhaust fumes from the interior of said separate enclosure and expelling them to the surrounding atmosphere and including a catalyst in the intake portion of said fan.

4,064,698
BOILER CONTROL HAVING A HEATING VALUE COMPUTER AND PROVIDING IMPROVED OPERATION WITH FUELS HAVING VARIABLE HEATING VALUES
Louis P. Stern, Pittsburgh, Pa., assignor to Westinghouse Electric Corporation, Pittsburgh, Pa.
Filed Sept. 3, 1976, Ser. No. 720,329
Int. Cl.[2] F01K *13/00*
U.S. Cl. 60—664 **7 Claims**

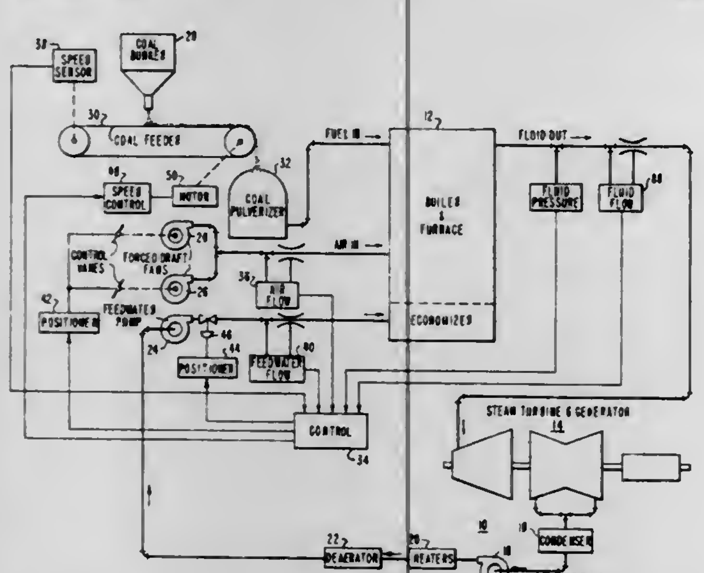

1. A control system for a boiler or other fluid heaters in which inlet fluid is heated to an elevated temperature and pressure, said system comprising means for generating a representation of load on the boiler, means for generating a demand for input fuel and a demand for input air as a function of the boiler load, means for generating respective representations of boiler outlet fluid flow and input fuel flow, means for generating a heat balance ratio of the outlet fluid flow and input fuel flow representations, means for controlling the input flow of fuel to satisfy the fuel demand, means for controlling the input flow of air to satisfy the air demand, and means for correcting one of said controlling means for changes in fuel heating value as a function of the heat balance ratio.

4,064,699
BOILER CONTROL PROVIDING IMPROVED OPERATION WITH FUELS HAVING VARIABLE HEATING VALUES
Lyle F. Martz, Penn Hills, Pa., assignor to Westinghouse Electric Corporation, Pittsburgh, Pa.
Filed Sept. 3, 1976, Ser. No. 720,328
Int. Cl.[2] F01K *13/00*
U.S. Cl. 60—664 **15 Claims**

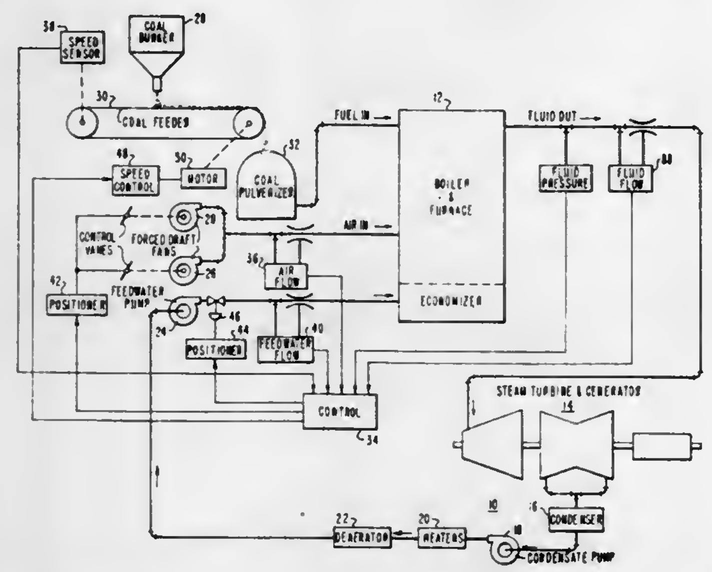

1. A control system for a boiler or other fluid heater in which inlet fluid is heated to an elevated temperature and pressure, said system comprising means for generating a representation of load on the boiler, means for generating a demand for input fuel and a demand for input air as a function of the boiler load, means for generating respective representations of boiler outlet fluid flow and input fuel flow, means for controlling the input flow of fuel to satisfy the fuel demand, means for controlling the input flow of air to satisfy the air demand, and means for correcting one of said controlling means for changes in fuel heating value as a function of the outlet fluid flow and input fuel flow representations.

4,064,700
MARINE ENGINEERING STRUCTURE WITH WIDE BASE USING A TRUSS
Shigeru Sameshima, Kikuna, Japan, assignor to Japan Port Consultants, Ltd., Tokyo, Japan
Filed June 30, 1976, Ser. No. 701,218
Claims priority, application Japan, Aug. 7, 1975, 50-96174
Int. Cl.[2] E02B *3/06;* **E02D** *27/00*
U.S. Cl. 61—4 **6 Claims**

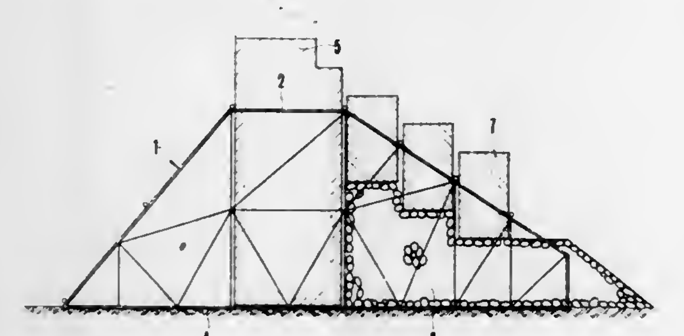

1. A marine engineering structure, such as a revetment, a breakwater or a quay wall, comprising at vertically extending truss structure having a horizontally arranged base at the lower end thereof, said truss structure comprising a plurality of vertically extending open-sided trusses spaced laterally apart, a plurality of interconnecting members joined to and extending between said trusses, said trusses and said interconnecting members dividing the interior of said truss structures into a plurality of vertically extending multi-sided open spaces extending upwardly above the base of said truss structure, a floor slab fixed to the base of said truss structure and extending transversely of the lower ends of said vertically extending open spaces, and at least one vertically extending prefabricated main body located within one of said open spaces and extending vertically upwardly from said floor slab, and said main body comprising a unitary block-like structure.

4,064,701
HYDRAULIC SHIELD ASSEMBLY
Hans-Otto Friedrichs, Wuppertal, Germany, assignor to Herman Hemscheidt Maschinenfabrik, Wuppertal, Germany
Filed Oct. 15, 1976, Ser. No. 732,705
Claims priority, application Germany, Oct. 16, 1975, 2546276
Int. Cl.[2] E21D *15/44*
U.S. Cl. 61—45 D **4 Claims**

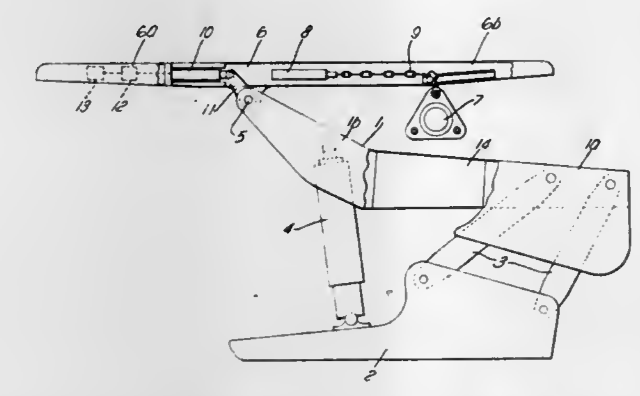

1. An hydraulic shield assembly for use in material-discharging operations in mines, comprising: a generally inclined shield having a front upper end and a rear lower end and having a pronounced bend at an intermediate part between those ends, a floor skid pivotally supporting the shield adjacent the said rear lower end of the shield, at least one hydraulic prop extending between the skid and the shield to raise or lower the shield, a roof-supporting structure pivotally mounted on the front upper end of the shield and extending a substantial distance to the rear of the said front upper end of the shield whereby a rear end of the roof-supporting structure lies vertically above the pivotally-supported rear-end portion of the shield, the portion of the shield to the front of the bend in the shield having top and bottom surfaces both of which are substantially more steeply inclined to the horizontal than top and bottom surfaces on the portion of the shield to the rear of the bend so as to provide a substantial space between the shield and the overlying rear portion of the roof-supporting structure at all positions of the shield, and a pipe for the discharge of material supported in that space by the roof-supporting structure.

4,064,702
APPARATUS FOR MAINTAINING AXIAL ALIGNMENT BETWEEN A DROP HAMMER AND A DRIVEN PILE
Joost W. Jansz, The Hague, Netherlands, assignor to Hollandsche Beton Groep N. V., Rijswijk, Netherlands
Filed Apr. 30, 1976, Ser. No. 681,935
Claims priority, application Netherlands, Dec. 9, 1975, 7514331
Int. Cl.[2] E02D *7/00*
U.S. Cl. 61—53.5 **3 Claims**

1. In an apparatus used in deep water pile driving having a pile lowered and driven into the seabed, the improvement comprising:

a. a rigid frame,
b. a drop-hammer mounted on the frame for vertical reciprocating movement,
c. rigid suspension means rigidly coupling the frame to hoisting means on a surface vessel and formed by a single member extending upwardly from the rigid frame,
d. a guide sleeve on the lower end of the drop-hammer, said guide sleve having a funnel-shaped mouth opening to receive the fit over the head of a pile to be driven into the seabed, whereby the rigidity of the frame and suspension means and the insertion of the pile head within the guide sleeve combine to maintain the pile in a vertical position during driving and to resist any tipping or tilting at the pile head, drop-hammer interface, and

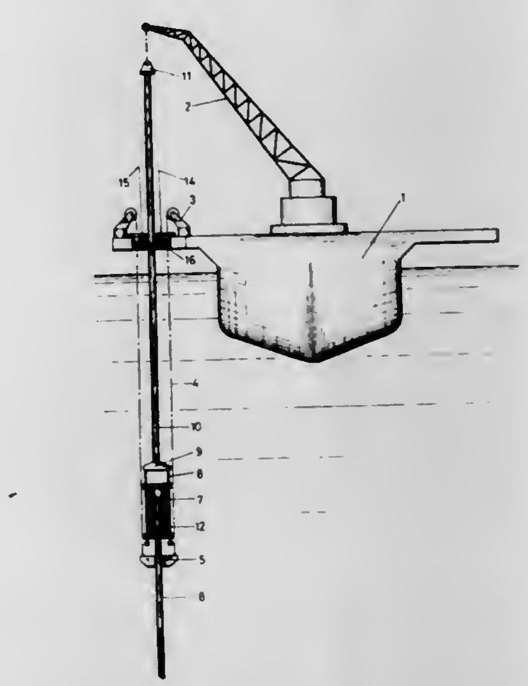

e. a crossbar secured to the pile and cable means connecting the crossbar to winch means on the surface vessel, and means guiding the frame on the cable means.

4,064,703
METHODS AND GUN FOR ANCHORING PILES AND FOR TEMPORARILY INTERCONNECTING TWO CYLINDERS UNDERWATER
Ivo C. Pogonowski, Blacksburg, Va., assignor to Texaco Inc., New York, N.Y.
Filed Dec. 24, 1975, Ser. No. 644,367
Int. Cl.[2] E02D *5/56*
U.S. Cl. 61—53.68 **7 Claims**

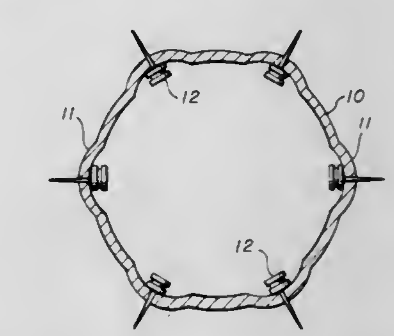

1. A method for anchoring a pile in a sandy soil strata and other granular soils comprising the method steps of,

a. driving a hollow cylindrical pile deep into the sandy soil strata,
b. forming a plurality of outwardly extending bumps in a horizontal plane around the periphery of the hollow cylindrical pile for packing the sandy soil strata around the bump by driving a plurality of headed spikes radially outwardly in the horizontal plane,
c. penetrating each bump with a spike as the spikes are pressed outwardly further after forming the bump, and
d. lodging each spike in the packed sandy soil strata of its respective bump with only the spike heads remaining in the hollow pile for increasing the load-carrying capacity and for increasing the resistance to pullout of the pile in the sandy soil strata and other granular soils.

4,064,704

VIBRATION ANALYZING APPARATUS

Bobby J. Blackburn, Columbus, Ohio, assignor to IRD Mechanalysis, Inc., Columbus, Ohio

Filed Dec. 5, 1975, Ser. No. 637,892

Int. Cl.² G01H *3/10*

U.S. Cl. 73—660 **2 Claims**

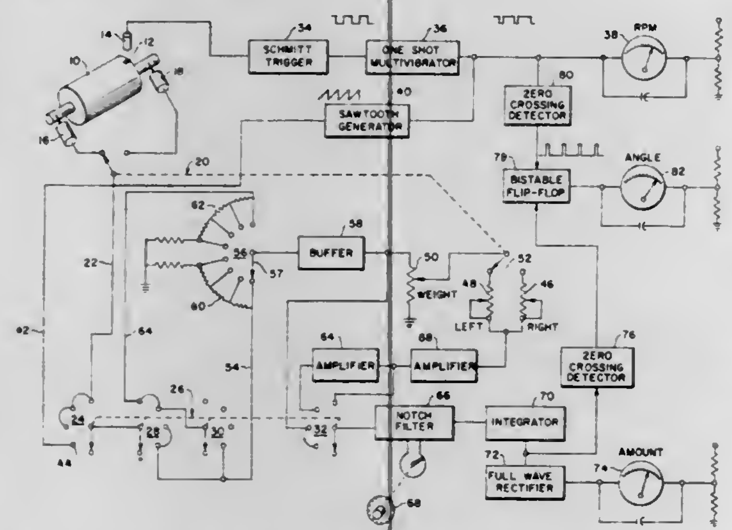

1. In electronic vibration analyzing apparatus, the combination of an electromagnetic transducer operatively connected to a rotating body to be balanced and adapted to produce a displacement signal having an amplitude and phase dependent upon the amount and location of unbalance in a rotating body, means for modifying said displacement signal as a function of the weight of said rotating body and the radius from the longitudinal axis of the rotating body at which a weight is added to balance the same, means for producing a pulsed signal in which the frequency of the pulses is proportional to the rotational speed of said rotating body, phase determining means including zero crossing detectors and a readout meter responsive to said pulsed signal and to said displacement signal for indicating on said readout meter the phase displacement of a point of unbalance on said rotating body with respect to a fixed point on the body, and an amount indicating means responsive to said displacement signal after modification for indicating the amount of unbalance in said rotating body.

4,064,705

AIR CONDITIONING SYSTEM HAVING COMPRESSOR-EXPANDER IN PRESSURIZED CLOSED LOOP SYSTEM WITH SOLAR ASSIST AND THERMAL STORAGE

Thomas C. Edwards, Cocoa Beach, and Amir L. Ecker, Cocoa, both of Fla., assignors to The Rovac Corporation, Rockledge, Fla.

Filed Oct. 26, 1976, Ser. No. 733,751

Int. Cl.² F25B *13/00*

U.S. Cl. 62—2 **15 Claims**

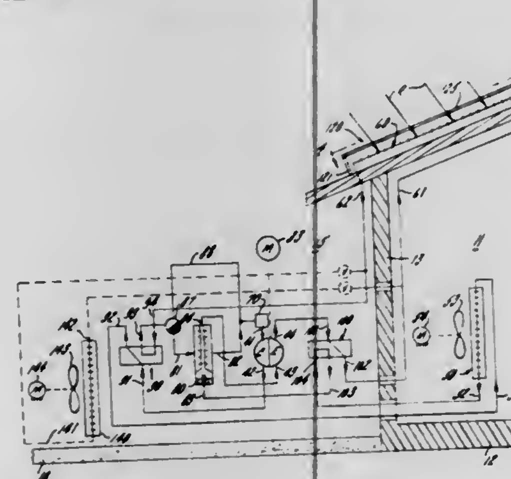

1. In an air conditioning system for an enclosed space the combination comprising a compressor having an inlet port and an outlet port, an expander having an inlet port and an outlet port, the compressor and expander having rotor means coupled together and including vanes for positive compression and expansion as the rotor means is driven, and indoor heat exchanger in the enclosed space, an outdoor heat exchanger in the ambient atmosphere, one of the heat exchangers being connected in primary position between the compressor outlet port and the expander inlet port and the other heat exchanger being connected in secondary position between the expander outlet port and the compressor inlet port to complete a closed loop having a charge of air, valve means for effectively interchanging the connections of the heat exchangers thereby permitting the indoor heat exchanger to be employed for warming in winter and for cooling in summer, the outdoor heat exchanger being in the form of a solar panel having an air conduit and having heat absorbing surfaces thermally coupled to the conduit for warming the conduit by solar radiation, the panel having means defining cooling air passages thermally coupled to the conduit for cooling the conduit by flow of ambient air, and means for alternatively abling and disabling the heat absorbing surfaces and the cooling air passages thereby causing the same outdoor heat exchanger to act as a solar heat absorber in winter and heat dissipating device in summer.

4,064,706

EVAPORATIVE ROOF COOLING SYSTEM

Raymond E. Stephens, Jr., 1486 Driftwood Drive, Palm Springs, Calif. 92262

Filed Mar. 3, 1977, Ser. No. 774,031

Int. Cl.² F25D *17/02*

U.S. Cl. 62—64 **16 Claims**

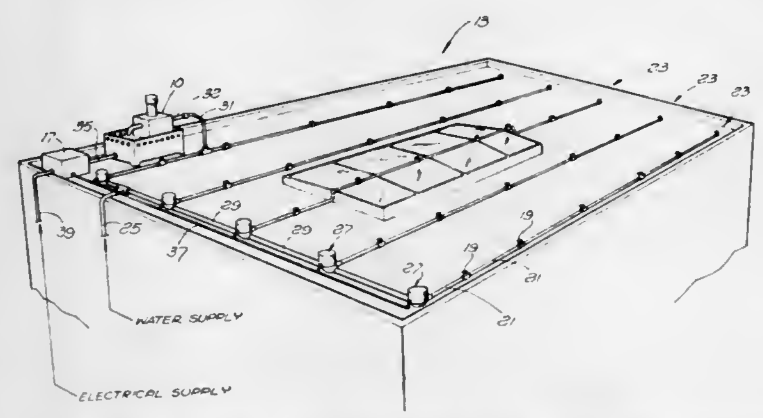

1. A control switch for evaporative roof cooling systems which spray a thin film of water onto the surface of a roof, comprising:

a pair of spaced electrodes located on a sample surface;

means for applying conductive water to said sample surface each time water is sprayed onto the surface of the roof;

electrical connection means for impressing a voltage differential between said electrodes; and

means for sensing current flow resulting from the presence of water between the electrodes, and actuating said cooling system when said current flow ceases.

4,064,707

APPARATUS FOR PRE-FREEZING SUBSTANCES OF PRODUCTS INTENDED TO BE PRE-FREEZED

Mario Connizzoli, Via XX Settembre, 40, Brembio (Milan); Camillo Peviani, Viccio Barni, 6, Lodi (Milan), and Francesca Maietti, Via Raffaello 15, Casalpusterlengo (Milan), all of Italy

Division of Ser. No. 451,273, March 14, 1974, abandoned. This application Mar. 12, 1976, Ser. No. 666,504

Int. Cl.² F25D *17/02*

U.S. Cl. 62—374 **4 Claims**

1. An apparatus for prefreezing substances or products intended to be freeze-dried, comprising in combination: a feeding means for feeding one at a time in row-like succession a plurality of containers to a metering station, said containers having a neck and a body, a metering means for introducing in each container a predetermined amount of substance or product, a tube adapted to contain a refrigerating fluid bath, a guiding and suspension means for the containers while they are being passed through said bath and thrust means to cause the containers to be advanced through the bath, said suspension and guiding means comprising at least one pair of parallel rods having substantially C-shaped cross-sections, said rods being arranged with the bent portions of each C facing those of the other C so as to form upper support means able to engage the neck of the containers and lower support means able to engage the body of the containers.

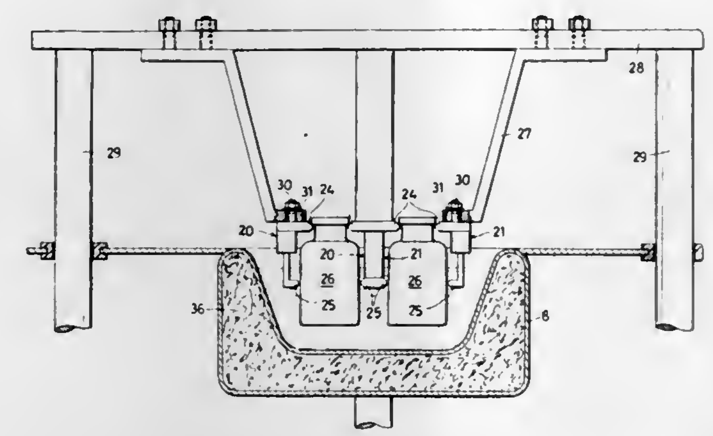

4,064,708

COUPLING FOR CONNECTING A ROTATING MEMBER TO A SHAFT

Eugene H. Breads, Westfield, N.Y., assignor to Renold Ajax Inc., Westfield, N.Y.

Filed May 13, 1976, Ser. No. 686,128

Int. Cl.² B25G *3/00, 3/20*

U.S. Cl. 64—1 V **6 Claims**

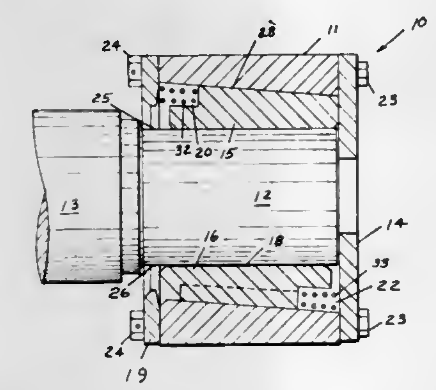

1. A coupling comprising, a sleeve adapted to connect a rotating member to a shaft,

said sleeve having an axial bore therein,

said axial bore receiving an end of said shaft,

a thrust plate attached to an end of said sleeve remote from said shaft,

at least two circumferentially-spaced keyways in said coupling extending through said sleeve from one end thereof to the other end,

a wedge-shaped key in each said keyway,

said shaft having two diametrically-opposed, axially-extending surfaces thereon,

surfaces of said keys adjacent said shaft slidably engaging said surfaces of said shaft,

said keyways being deeper at the ends thereof adjacent said springs whereby said wedge-shaped keys are urged toward the shallower end of said keyways,

a retaining ring fixed to the end of said coupling adjacent said shaft, and a thrust plate fixed to the end of said sleeve opposite said retaining ring,

a bore in said first key,

a spring in said bore in said first key engaging said retaining ring, urging said first key to slide toward said thrust ring,

a second bore in the end of said second key adjacent said thrust ring,

a second spring in said second bore,

said second spring engaging said first key and said thrust ring, urging said second key to slide toward said retaining ring whereby said first key and said second key are urged in opposite directions by said springs and toward the center of said shaft.

4,064,709

WRAP FEEDING DEVICE FOR CIRCULAR KNITTING MACHINE

Teishichi Hayashi, Aichi, Japan, assignor to Nichimen Co., Ltd., Osaka, Japan

Filed Oct. 1, 1975, Ser. No. 618,707

Claims priority, application Japan, Oct. 24, 1974, 49-122672

Int. Cl.² D04B *9/32*

U.S. Cl. 66—135 **7 Claims**

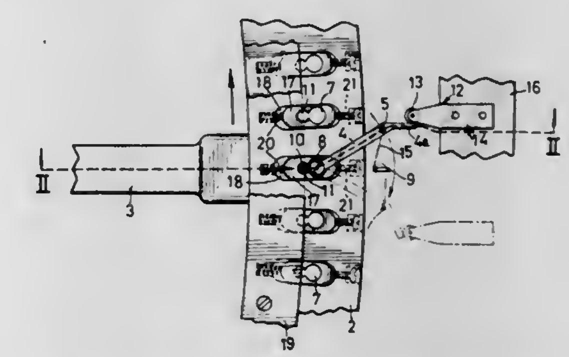

1. A wrap feeding device for circular knitting machines, having a vertical needle, comprising:

a support ring having a cavity formed therein;

a rotatable cylinder disposed beneath said support ring concentrically therewith;

yarn guide means, including a movable block having first and second recesses mounted in said cavity of said support ring for adjustable movement therein radially of said support ring, an arm one end of said arm including a tubular portion received within said first recess of said block, and the other end of said arm including an angled portion in the form of a dog-leg, said angled portion having a hole forming a yarn passage, said yarn passage extending substantially vertically through said other end at said angled portion, screw means fitted within said tubular portion and pivotably connecting said arm to said movable block for movement in a horizontal plane;

return spring means, including a helical spring fitting around said tubular portion in said first recess and comprising a lower end fixed to said tubular portion, and an upper end received in said second recess to act on said yarn guide and bias said arm in the direction of rotation of said cylinder;

abutting means disposed in a path of movement of said dog-leg of said yarn guide for contacting thereof to cause the yarn guide to move against said return spring means and to lap a wrap yarn thereon around the vertical needle over the front half circumference of the needle;

a helical spring held in position by said support ring and urging said block toward said abutment means; and

an adjustable locking screw received in said support ring and bearing on said block on a side opposite to said helical spring cooperating therewith, to permit displacement of said block radially of said support ring, thereby varying the stroke of said arm.

4,064,710
SAFETY DEVICE FOR KNITTING MACHINE
Erich Krause, Bopfingen, Germany, assignor to Universal Maschinenfabrik Dr. Rudolf Schieber KG, Westhausen, Germany
Filed Oct. 5, 1976, Ser. No. 729,626
Claims priority, application Germany, Oct. 10, 1975, 2545558
Int. Cl.² D04B *35/10*
U.S. Cl. 66—157 **7 Claims**

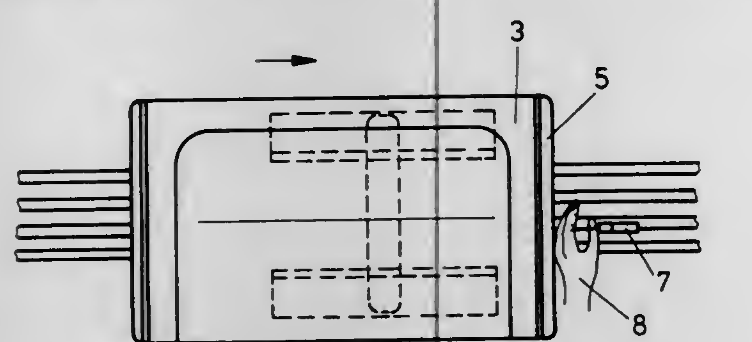

1. In a knitting machine including a stopping mechanism which can be triggered in the event of danger to terminate machine operation, cam carriage movable on said machine, and a hood in the zone of movement in which the cam carriage moves for protecting the machine operator, the improvement comprising:
- means for mounting said hood on said cam carriage for movement with said cam carriage and relative to said cam carriage in the direction of cam carriage movement, and
- a contact device mounted to the face of the hood as viewed in the direction in which the cam carriage travels for triggering the stopping mechanism of the knitting machine,
- and wherein said means for mounting said hood for movement relative to the cam carriage comprises means for permitting displacement of said hood relative to said cam carriage through a distance corresponding to the braking distance of the cam carriage after the stopping mechanism has been triggered.

4,064,711
SAFETY STOPPING DEVICE FOR KNITTING MACHINE
Erich Krause, and Hans Schieber, both of Bopfingen, Germany, assignors to Universal Maschinenfabrik Dr. Rudolf Schieber KG, Westhausen, Germany
Filed Oct. 5, 1976, Ser. No. 729,629
Claims priority, application Germany, Oct. 10, 1975, 2545560
Int. Cl.² D04B *35/10*
U.S. Cl. 66—157 **5 Claims**

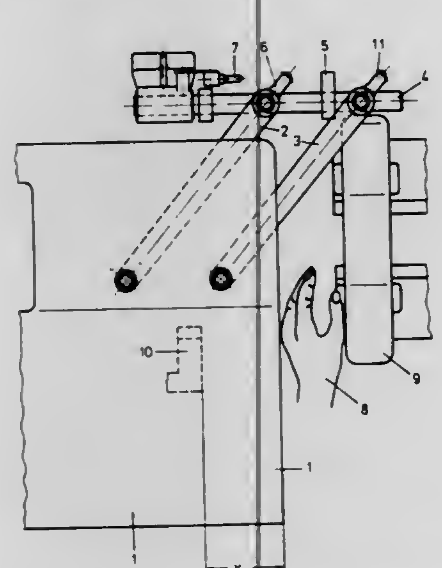

1. In a knitting machine having a stationary part and a movable part mounted for movement relative to the stationary part and being driven in a direction which could cause pinching of the operator's hand between the movable part and the stationary part and having a stopping mechanism which may be triggered to terminate movement of the movable part in the event of danger and a hood covering the stationary part, the improvement comprising:
- means for mounting said hood on said machine in a position extending across the stationary part and between the stationary part and the movable part for movement in the direction in which pinching of the operator's hand could occur, and
- means for triggering said stopping mechanism in response to movement of said hood in said direction to prevent pinching of the operator's hand when the operator's hand is caught between said movable member and said hood, and wherein said means for mounting said hood comprises means for permitting said hood to move through a distance equal to the maximum braking distance of said movable part of the knitting machine after triggering of the braking mechanism plus a reserve distance.

4,064,712
WARP KNIT PRODUCT AND PROCESS
James Franklin Sayre, and Karl Harvey Smale, both of Wilmington, Del., assignors to E. I. Du Pont de Nemours and Company, Wilmington, Del.
Filed Jan. 21, 1977, Ser. No. 760,936
Int. Cl.² D04B *23/08, 23/10*
U.S. Cl. 66—192 **9 Claims**

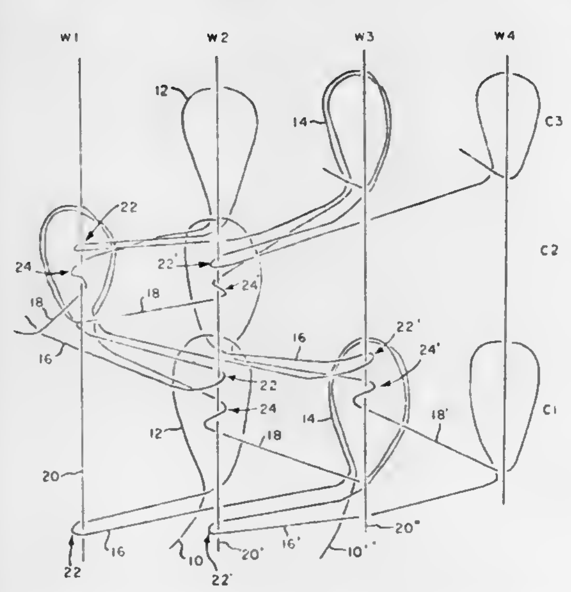

1. A warp-knit two-way stretch fabric comprising a ground construction of a plurality of ends of inelastic yarn knitted into stitches arranged in wales and courses interconnected by diagonal underlap segments of said inelastic yarn and a plurality of ends of elastic yarn laid into said ground construction,
- a. each end of said inelastic yarn having in each of said courses a pair of loop segments in adjacent wales of said wales and a segment interconnecting said pair of loop segments,
- b. each of said stitches having loops of two ends of said inelastic yarn, and
- c. each end of said elastic yarn being substantially parallel to said wales of said ground construction and being covered in each course thereof by a full wrap of one of said underlap segments and a half wrap of an interconnecting segment of said inelastic yarn.

4,064,713
SEAL DEVICE FOR A HIGH PRESSURE STEAMER
Yoshikazu Sando, and Hiroshi Ishidoshiro, both of Wakayama, Japan, assignors to Sando Iron Works Co., Ltd., Japan
Filed Aug. 23, 1976, Ser. No. 717,012
Claims priority, application Japan, Sept. 8, 1975, 50-123574[U]; May 19, 1976, 51-57614; May 19, 1976, 51-57616
Int. Cl.² D06B *23/18*
U.S. Cl. 68—5 E **1 Claim**

1. A seal device for a high pressure steamer comprising a seal

block forming an axially elongated passage and arranged to be mounted on one of the inlet to or outlet from the drum body of a high pressure steamer, said passage having a first end opening to the drum body and second end spaced outwardly from the drum body, a pair of rubber seal rolls located at the second end of said passage and disposed in pressed contact with one another forming a nip therebetween, said rolls forming a closure for the opening from the second end of said passage, sealing plates located at the second end of said passage and fixed to said seal block, said sealing plate projecting outwardly from said seal block and arranged to contact the peripheral surfaces of said seal rolls, a cylindrical duct located within and extending in the axial direction of said passage and being spaced inwardly from the surface of the passage forming therebetween an annular flow space extending in the axial direction of

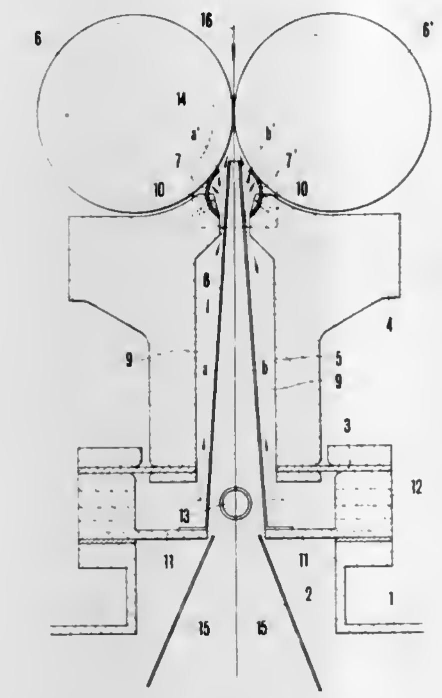

said passage and cylindrical duct, said cylindrical duct having a first end close to the first end of said passage and a second end located at the second end of said passage adjacent the nip formed by said seal rolls, said annular flow space being closed at the end thereof located at the first end of said cylindrical duct, and a port for supplying pressurized air located in said seal block for supplying pressurized air into said annular flow space for flowing the pressurized air through the flow space to the second end of said cylindrical duct adjacent said seal rolls where the air contacts said sealing plates and the peripheral surface of said seal rolls and reverses direction and flows through said cylindrical duct toward the first end thereof, said sealing plates being flexible so that the pressurized air contacting said plates forces them into contact with the peripheral surface of said seal rolls.

4,064,714
LOCK BAR ASSEMBLY
Angelo Treslo, 1740 N. Linder Ave., Chicago, Ill. 60639
Filed Sept. 18, 1975, Ser. No. 614,366
Int. Cl.² E05B *71/00, 73/00*
U.S. Cl. 70—18 **7 Claims**

1. A lock bar assembly adapted for attachment to a variety of articles to effect the interlocking of said articles, comprising in combination,
- a hollow V-shaped tube having opposed ends and being hollow throughout the interior portion thereof, the arms of said V-shaped tube being substantially equal in length,
- said tube provided with a crimp portion adjacent each of said opposed ends,
- each of said crimp portions extending a substantial length along the transverse interior diameter of said tube, wherein said crimps are each formed as flat portions thereby to function as mount points for mounting the said lock bar assembly to an article to be locked,
- a pair of first and second cables provided within said hollow tube and each cable having an interior end and an exterior end,
- each of said cables carrying stop means positioned at the interior ends thereof, said stop means coacting with a corresponding crimp to form a position whereby the interior end of each of said cables is securely held within the confines of said tube when fully extended,
- lock means provided on the exterior end of said first cable and mating lock means provided on the exterior end of said second cable,

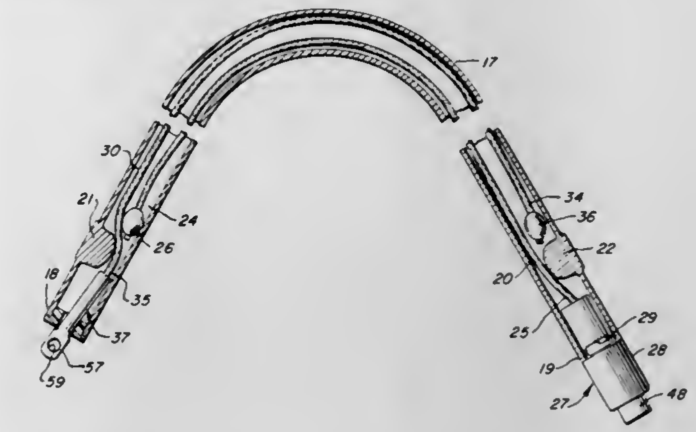

- and each of said cables being reciprocally movable into and out of said tube until the interior ends thereof reach said stop positions,
- whereby said hollow tube may be mounted on any of a variety of articles by mount means thereby to securely hold the same to the article and said first and second cables may be reciprocally moved out of the confines of said tube to encircle the article to be locked until said lock means of said first and second cables may be lockingly engaged thereby to interlock the same and securely hold between the confines of said hollow tube and said first and second cables the articles to be interlocked.

4,064,715
ANTI-THEFT DEVICE
David A. Hodgson, Hamburg, and James S. Grey, East Otto, both of N.Y., assignors to International Power Pole, Ltd., Hamburg, N.Y.
Filed Jan. 24, 1977, Ser. No. 761,658
Int. Cl.² E05B *37/02, 73/00*
U.S. Cl. 70—18 **10 Claims**

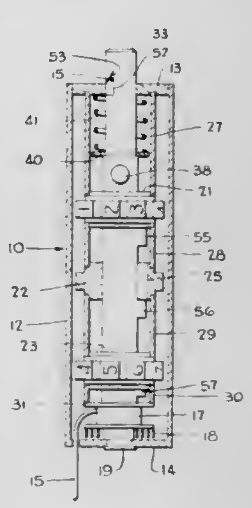

1. An anti-theft device including a flexible cable adapted to be looped about an object to be secured or about a relatively fixed member to which the object is to be secured, or both; said device comprising a housing, a cable winding spool in said housing, said cable being wound thereon and having a free end projecting from said housing, a control member carried by said housing and including means for lockingly engaging an intermediate portion of said cable along the length thereof for

forming a closed loop at the outer portion of said cable, a combination lock in said housing, said control member being movable between locked and unlocked positions with respect to said cable under the control of said combination lock.

4,064,716

SAW RESISTANT LOCK

Warren M. Shwayder, Bloomfield Hills, and John T. Loftus, Detroit, both of Mich., assignors to The Shwayder Company, Birmingham, Mich.

Filed Apr. 5, 1976, Ser. No. 673,426

Int. Cl.^{2} E05B *67/22*

U.S. Cl. 70—38 A **10 Claims**

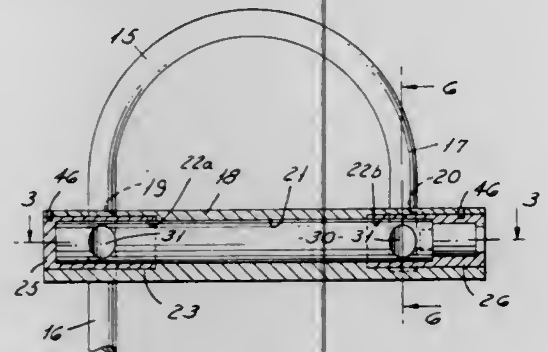

1. A lock comprising:
- a bar-like base having a pair of spaced apart holes formed transversely thereof, and a bore extending longitudinally through said base;
- a U-shaped shackle having its legs normally extending into said base holes for locking therein;
- an elongated bolt member rotatably fitted within said bore and spanning the space between and overlapping said shackle legs within the bar;
- each of said legs having a notch formed therein for partially receiving the adjacent overlapping portions of said bolt member and a notch formed in said bolt in alignment with each shackle leg, whereby axial rotation of said bolt member causes peripheral portions of said bolt member to enter into the shackle notches and thereby lock the shackle within the base, and continued rotation causes the bolt notches to axially align with the shackle legs for endwise movement of the legs relative to the base for unlocking the shackle;
- and locking means operable for rotating said bolt;
- the opposite ends of said base bore each being of an enlarged diameter relative to the central portion thereof;
- a centrally bored bushing inserted and closely fitted within each of said bore opposite ends and receiving the adjacent end portion of said bolt for rotation of said bolt within the bushings, and each bushing having a notch aligned with and receiving its adjacent shackle leg portion, and also aligned with a bolt notch arranged within the respective bushing;
- and said lock means being mounted within one of said bushings for rotation of said bolt.

4,064,717

ANTI-THEFT CAP FOR A SCREWTHREADED BASE

Michel Neiman, Paris, France, assignor to Societe de Diffusion NEIMAN, Courbevoie, France

Filed May 24, 1976, Ser. No. 689,706

Claims priority, application France, July 24, 1975, 75.23079

Int. Cl.^{2} B65D *55/14*

U.S. Cl. 70—165 **2 Claims**

1. An anti-theft cap for a container having a screw threaded opening comprising a screw threaded closure member for cooperation with said screw threaded opening, stop means on said closure member, a cap member secured to and rotatable about said closure member, a lock fixedly connected to said cap member and including a catch element movable, upon operation of said lock, between a first and a second position, said catch element in said first position engaging said stop means and in said second position being disengaged from said stop means, rotation of said cap member with said catch in said first position imparting torque to said closure member and said cap member being freely rotatable on said closure member with said catch in said second position, said stop means comprising a pivoted lever elastically deflectable out of engage-

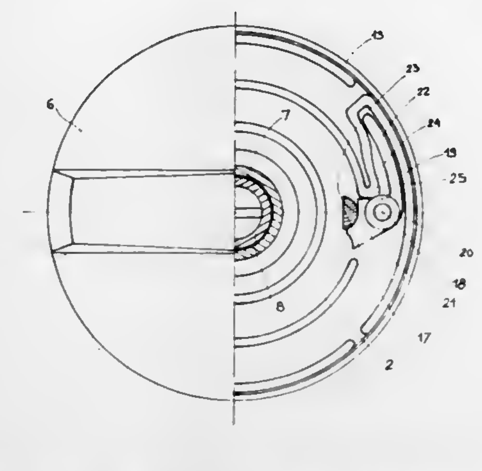

ment with said catch element upon the application of a torque greater than a predetermined limit upon rotation of said cap member in one direction and abutment means on said closure member engaging said lever and preventing deflection of said lever upon rotation of said cap member in the opposite direction, and wherein said lever is a bell crank lever, one limb of which is substantially rigid and engages said catch element and the other limb of which is elastically deformable.

4,064,718

NUMERICAL COMBINATION REPLACEMENT PLUG FOR CYLINDER LOCKS

Lloyd G. Cowen, 816 Leeds Drive, North Bellmore, N.Y. 11710

Filed Feb. 28, 1977, Ser. No. 772,460

Int. Cl.^{2} E05B *37/04*

U.S. Cl. 70—302 **2 Claims**

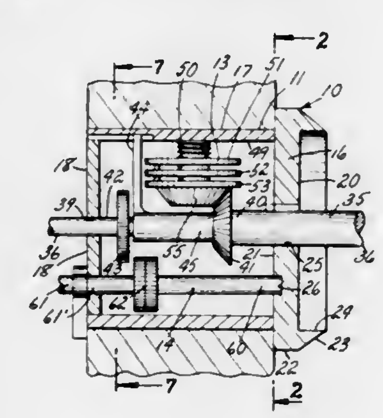

1. As a new article of manufacture, a plug for a cylinder type lock comprising: a hollow housing element including a planar front wall, a cylindrical side wall and a generally planar rear wall, said walls defining a cavity having a principal cylinder axis; a dial element including a first axially positioned shaft supported by said housing element for selective rotational and axial movement relative thereto, said shaft extending through an opening in said front wall at a front end thereof; a dial knob supported upon said front end of said first shaft, and a first medially positioned spur gear on said first shaft; a tumbler element carried by said housing element, and driven by said first shaft, said tumbler element including a plurality of planar circular tumbler members, each having an opening therein selectively alignable with corresponding openings in the other tumbler members and having pin means interconnecting the same for limited rotational relative movement; a bar member carried by said first shaft for axial movement thereon and freely rotatable relative thereto, said bar member being selectively positionable within aligned openings in said tumbler members, said bar member normally preventing outward axial

movement of said shaft; a second motion output shaft element carried by said housing element, and having a second spur gear thereon selectively engagable with said first spur gear; whereby upon the dialing of a correct combination resulting in the alignment of said openings in said combination tumblers, said first shaft may be moved axially outwardly of said housing element to position said bar member within said openings, and engage said first and second spur gears for the transmission of rotary motion from said knob to said second shaft.

4,064,719

EMERGENCY RELEASE FOR SECURITY PANELS

Maynard A. Boeckman, Kane, Pa., and Richard M. Singer, Lafayette, Calif., assignors to Kane Manufacturing Corporation, Kane, Pa.

Filed Aug. 18, 1976, Ser. No. 715,387

Int. Cl.^{2} E05B *21/00*

U.S. Cl. 70—355 **3 Claims**

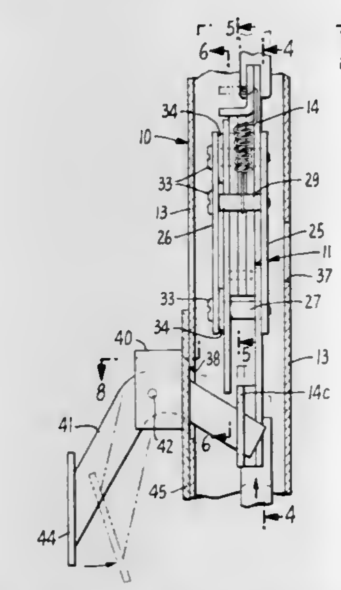

1. A security panel having a emergency release, said panel being mounted for opening or removal in one direction only and comprising: a frame having a key opening formed through one side and a slot opening formed through the opposite side, said openings being out of axial alignment; lock mechanism mounted in said frame, said lock mechanism comprising a pair of slide levers disposed on opposite sides of a set of tumblers, one slide lever being engageable by a key inserted through the key opening, the other slide lever being accessible from the opposite side of said frame through the slot opening; and means responsive to sliding actuation of said pair of slide levers for securing or releasing said frame to or from a support; and an emergency release subassembly comprising a support bracket and a bell crank pivoted from said bracket, one end of said crank being receivable through the slot opening and engageable with said other slide lever; whereby the security panel may be opened from a closed and locked position to an open position either by a key from one side of the panel or by applying a force to the bell crank from the opposite side of the panel.

4,064,720

CYLINDER LOCK MECHANISMS

Eric Fry, Toronto, Canada, assignor to Jonathan Lock Limited, Downsview, Canada

Filed Feb. 28, 1977, Ser. No. 772,484

Claims priority, application United Kingdom, Mar. 26, 1976, 11092/76; Dec. 22, 1976, 53547/76

Int. Cl.^{2} E05B *27/08*

U.S. Cl. 70—363 **10 Claims**

1. A cylinder lock mechanism comprising a body having a cylindrical bore, a lock plug extending longitudinally of the bore and normally freely rotatable therein, a plurality of pin tumblers housed in tumbler bores extending longitudinally within the plug and displaceable into predetermined longitudinal positions by insertion of a key into a keyway defined at the front end of the body and communicating with the tumbler bores, and a clutch member rotatable within the body to the rear of the plug, wherein a three part linkage extends between the tumblers and the clutch member comprising a transversely moveable actuator member normally disengaged from the tumblers and having a range of movement in a transverse guideway within the plug intermediate its ends so as to enter the tumbler bores in response to the tumblers simultaneously

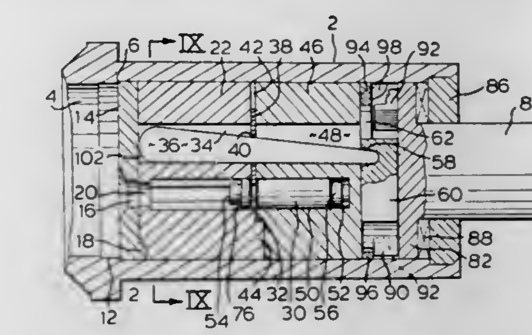

assuming said predetermined positions, a clutch dog between the plug and the clutch member and having a range of transverse movement into and out of a position coupling the plug and the clutch member, and a lever extending longitudinally in a lever bore in the plug parallel to but spaced from the tumbler bores, said lever being rockable about a fulcrum in said lever bore and engaging the actuator and the dog to coordinate their movements.

4,064,721

SECURITY LOCK FOR DEAD-BOLT DOOR LOCKS

Robert H. Morgan, Milwaukee, Wis., assignor to Richard V. Marsek, Wauwatosa, Wis., a part interest

Filed Oct. 7, 1976, Ser. No. 730,619

Int. Cl.^{2} E05B *17/00*

U.S. Cl. 70—416 **12 Claims**

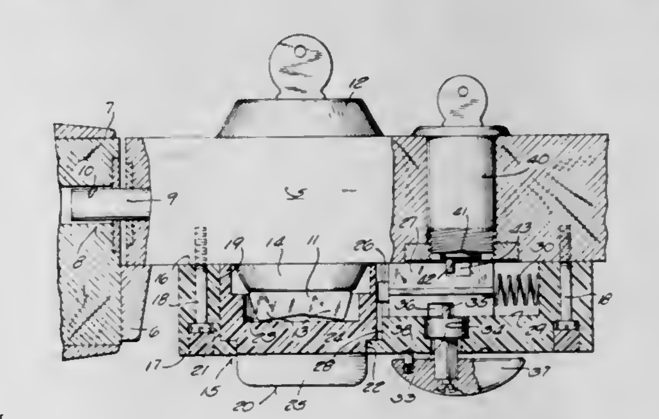

1. A locking device for preventing unauthorized retraction of the bolt of a dead-bolt door lock of the type wherein rotation of a key controlled actuator at the outside of the door and of a non-circular manual actuator at the inside of the door selectively effects projection or retraction of the dead bolt, depending in each instance upon the direction or rotation, said locking device comprising:

A. a base having
   1. opposite inner and outer faces,
   2. a round hole therethrough opening to both of said faces, and
   3. a straight sided guideway that is substantially radial to the axis of said round hole and at one end thereof opens into said hole;

B. a shroud having an axis, rotatably seated in said round hole with its axis intersecting said inner and outer faces of the base and the axially opposite ends of the shroud accessible at said faces,
   said shroud also having a keeper recess in
   a peripheral side surface thereof;

C. a socket in the end portion of the shroud that is accessible at the inner face of the base, said socket being of a size and shape to receive and fit said non-circular manual actuator of a dead-bolt lock with which the locking device is asso-

ciated, so that said non-circular manual actuator may be turned by rotating the shroud, the keeper recess in the peripheral side surface of the shroud being aligned with said guideway when the shroud is in its position of rotation at which the dead-bolt is in its projected position;

D. means at the end portion of the shroud that is accessible at the outer face of the base by which rotation can be imparted to the shroud;

E. means for securing the base to the inside of the door with the shroud covering and drivingly connected with said non-circular manual actuator;

F. a security bolt slidably received in said guideway in the base for movement between a projected operative position engaging said peripheral side surface of the shroud and a retracted inoperative position disengaged from said peripheral side surface of the shroud;

G. spring means biasing the security bolt towards its projected operative position so that, when free to be moved by said spring means, the security bolt snaps into the keeper recess in said peripheral side surface of the shroud upon rotation of the shroud to its position at which the dead bolt is in its operative position;

H. a control member for the security bolt selectively movable to a plurality of defined positions; and

I. drive means operatively connecting the control member with the security bolt and through which the operativeness of the security bolt is governed by selective positioning of the control member.

4,064,722
KEY CASE AND WATCH COMBINATION
Pearl M. Wolski, 13 Hartford St., South Hadley, Mass. 01075
Filed Aug. 31, 1976, Ser. No. 719,327
Int. Cl.² A44B *15/00;* **A45C** *11/32;* **A47G** *29/10*
U.S. Cl. 70—456 B **4 Claims**

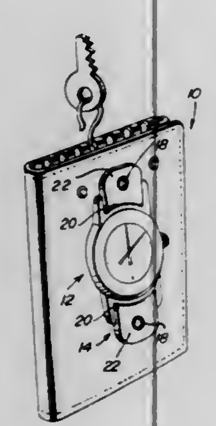

1. In combination, a key case, a watch, and attachment means associated with both the key case and the watch for detachably connecting the watch to the key case, the attachment means including a pair of spaced first snap fastener parts affixed to the key case, and a pair of spaced second snap fastener parts provided on the watch for selectively cooperating with the first snap fastener parts, the key case being constructed from a flexible material and including a semi-rigid reinforcing strip arranged covering a back of the case for stiffening same, the first snap fastener parts being partially supported by the strip.

4,064,723
HYDROSTATIC EXTRUSION PRESS
Hans Gunnar Larsson, and Erik Westman, both of Vasteras, Sweden, assignors to Allmanna Svenska Elektriska Aktiebolaget, Vasteras, Sweden
Filed June 29, 1976, Ser. No. 700,790
Claims priority, application Sweden, July 18, 1975, 7508221
Int. Cl.² B21D *22/10*
U.S. Cl. 72—60 **7 Claims**

1. A press for hydrostatic extrusion which comprises means forming a pressure chamber, a die mounted at one end of the pressure chamber having a passageway therein and including a conical inlet portion and a die-opening portion, said die-opening portion including an internal opening for forming a billet which is forced therethrough from inside the pressure chamber by a pressure medium to form a product of desired cross-section, said internal opening in said die-opening portion having the smallest cross-section in said passageway, said die including draining channel means which communicates between said passageway adjacent a lower part of said inlet portion of said

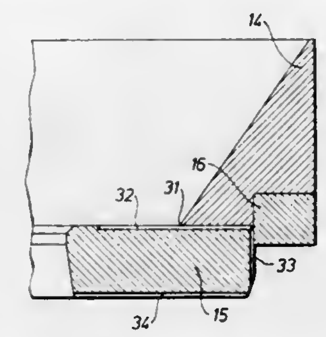

die and a space outside of said pressure chamber which is at a pressure lower than the pressure of said passageway so as to by-pass said internal opening of said die-opening portion and act to intercept and divert any pressure medium which accompanies the billet more than halfway through the passageway in the inlet portion of the die as it passes therethrough such that intermittent passage of pressure medium through said internal opening is prevented.

4,064,724
SHEAVE FORMING METHOD
James E. Armstrong, 6170 Park St., Jacksonville, Fla. 32205
Continuation-in-part of Ser. No. 600,585, July 31, 1975, abandoned. This application Sept. 27, 1976, Ser. No. 726,764
Int. Cl.² B21H *1/04*
U.S. Cl. 72—108 **5 Claims**

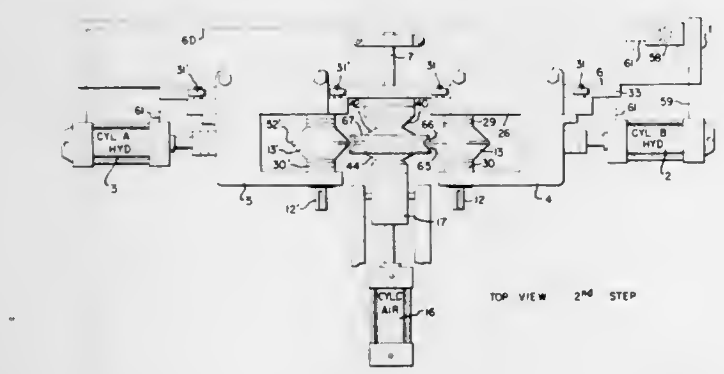

1. The method of forming wiremill sheaves which comprises forming a blank by boring an axial cylindrical bearing opening through a steel plate workpiece roughly cylindrical in outline and said workpiece having a diameter of between about 2 and 50 times the thickness dimension of said plate, machining the cylindrical surface of the blank to the shape of a right cylinder coaxial with the axis of said opening, mounting said blank on arbor means fitting said opening, pressing circular face plates retained on such arbor means against the opposite faces of the blank with a force of at least several hundred pounds, said face plates being of equal diameters, forcing, with forces of the order of several tons toward and into the peripheral surface of said blank midway between the faces of the blank, the peripheral edges of two diametrically opposed driven forming rolls of hardened tool steel, said rolls being at least substantially identical and each being of right symmetrical double frusto-conical configuration with a peripheral edge centrally between the ends at which the conical faces meet at an included angle of between about 45° and 100°, such edge being radiused to a radius of about 0.03 to about 0.2 inches, while drivingly rotating said rollers at the same speeds to provide rotational movement of said peripheral edges of the order of hundreds of feet per minute and while maintaining the axes of rotation of said

blank and rollers parallel and in the same plane, such forcing being balanced between said rollers and the force being applied perpendicularly of said axes, and the forcing causing initial grooving of the blank and progressive deepening of such groove and dividing of the peripheral portion of the blank into two outturned lips, continuously applying a lubricant resistant to high temperatures and high pressure to the contacting surfaces of the blank and rollers while said groove is being so formed, and maintaining sufficient force of the forming rolls against the blank to cause such lips to hug and to be polished by said faces of the forming rolls, whereby said lips are caused to define therebetween a polished wire-receiving sheave groove having a bottom rounded to said radius and having hardened wear resistant surfaces.

4,064,725
APPARATUS FOR MAKING SPIRALLY WOUND ELECTROCHEMICAL CELLS
Leonard F. Hug, Wheatridge; Donald H. McClelland, Littleton, and Toshio Uba, Denver, all of Colo., assignors to The Gates Rubber Company, Denver, Colo.
Filed Oct. 18, 1976, Ser. No. 733,674
Int. Cl.² B21C *47/12*
U.S. Cl. 72—147 **7 Claims**

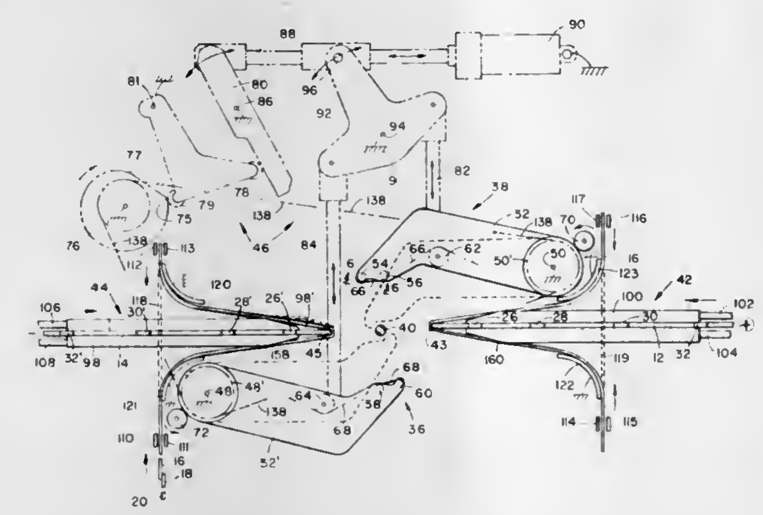

1. Apparatus for spirally winding electrode plates and interleaved separators into a generally cylindrical form, comprising:

first and second retractable juxtaposed winding heads having driving surfaces;

means for advancing and retracting the winding heads relative to each other;

a free turning mandrel positioned between the driving surfaces;

means for feeding a leading edge of one of the electrode plates flanked on at least one of its sides with separator material in between the mandrel and the driving surface of the winding head;

means for feeding a leading edge of the other electrode plate flanked on at least one of its sides with separator material in between the mandrel and the driving surface of the second winding head; and

means for driving at least one of the driving surfaces about the winding head to spirally wind the electrode plates and separators.

4,064,726
METHOD OF MANUFACTURING PRESSURE POTS HAVING A BAYONET CATCH, AND APPARATUS FOR CARRYING OUT SUCH METHOD
Dietrich Hinze, Breslauer Str. 9, 4730 Ahlen, Germany
Filed Oct. 29, 1975, Ser. No. 626,785
Claims priority, application Germany, Nov. 11, 1974, 2453374
Int. Cl.² B21D *51/24*
U.S. Cl. 72—70 **8 Claims**

1. A method of manufacturing pressure cooking pots having a cylindrical wall and an upper radially outwardly projecting rim having underlying cam surfaces for cooperation with a lid structure for the pot, said method comprising the steps of:

rotating said rim of said pot relative to spinning rollers, engaging an upper portion of said rim with said rollers and applying pressure for folding over said rim,

engaging the undersurface of said folded over rim with a profile complementary to at least a portion of said under-

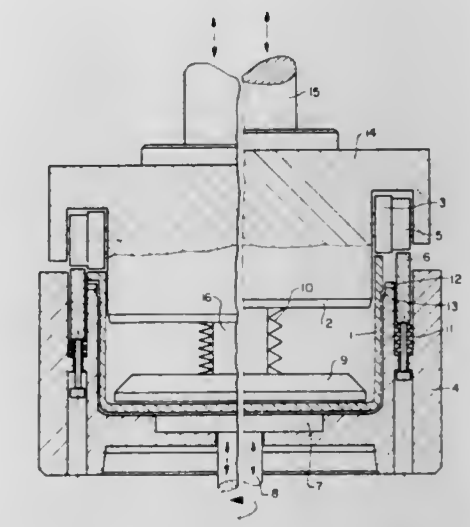

lying cam surfaces and forming said cam surfaces during the folding over of said rim, engaging the radially outer side of the folded over rim to limit outward movement of metal during the folding over and cam forming steps,

and removing portions of said rim above said cam surfaces until gaps between adjacent portions of said cam surfaces are exposed to complete the formation of said rim.

4,064,727
ROLL FORMING MACHINE
Tadashi Amano, Machida; Susumu Kawano, Atsugi; Kenji Mano, Isehara, and Takaji Irisawa, Hatano, all of Japan, assignors to Amada Company, Limited, Japan
Filed Apr. 26, 1976, Ser. No. 680,379
Claims priority, application Japan, Apr. 25, 1975, 50-55800[U]
Int. Cl.² B21D *5/14*
U.S. Cl. 72—179 **7 Claims**

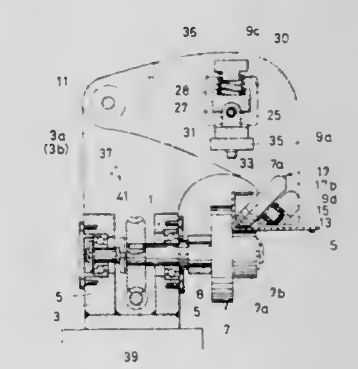

1. A roll forming machine for forming sheet metal of a given range of thickness comprising a plurality of forming units disposed sequentially along a work path and adapted to form said sheet metal into a given shape in a series of progressive deformations, each of said forming units including a frame rotatably supporting a lower roller about a first axis of rotation, said lower roller including working surfaces provided by a bending portion and a holding portion defining a predetermined angle therebetween, an upper roller having two frusto-conical peripheries divided by a transverse median plane and disposed in confronting relation to the working surfaces of said bending and holding portions of said lower roller and spaced therefrom by a distance corresponding substantially to a given thickness of said sheet metal, said frusto-conical peripheries defining an angle therebetween corresponding substantially to

said predetermined angle, swingable means for mounting said upper roller in said frame such that when said upper roller is in confronting relation to said lower roller its axis of rotation is inclined to said first axis, and means for moving said swingable means to swing said upper roller along an arcuate path having a tangent which substantially bisects said predetermined angle in order to vary the distance between said upper and lower rollers and thereby accommodate sheet metal of different thicknesses within said range.

4,064,728
DEVICE FOR SELECTING SETS OF ROLLS FOR TWENTY-HIGH ROLLING MILL
Leonid Vasilievich Dobrovolsky, ulitsa 40 let Sovetskoi Ukrainy 7, kv. 25, Zaporozhie, U.S.S.R.
Filed Mar. 21, 1977, Ser. No. 779,523
Int. Cl.² B21B *31/08*
U.S. Cl. 72—238 **2 Claims**

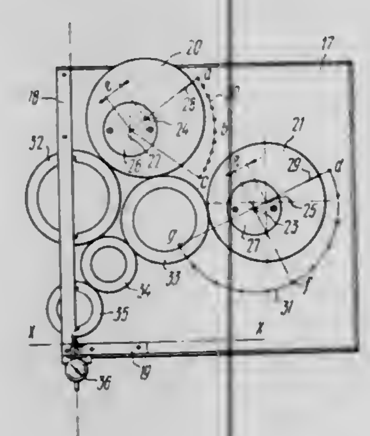

1. A device for selecting sets of rolls for a twenty-high rolling mill, said device being a model of said mill, comprising: a flat board; eccentric disks installed on said board in full conformity with the positioning of backup rolls of a rolling mill and being rotatable in the plane of said board, the dimensions of said disks corresponding to the dimensions of the backup rolls of the rolling mill; a vertical guide member secured on said board and adapted for disks corresponding working and idle rolls to traverse therealong; a horizontal bar corresponding to the pass line of the rolling mill, with respect to which the position of the working roll is determined; other disks installed on said board in conformity with the positioning of intermediate and drive rolls in the rolling mill, said model thus forming a two-dimensional model of the roll arrangement in the rolling mill, so that by varying the position of said disks corresponding to the backup rolls, it is possible to select the dimensions of the remaining rolls to provide the required processing gap between the working rolls of the rolling mill.

4,064,729
METAL FORMING DEVICE
Alex Homery, 3324 NW. S. River Drive, Miami, Fla. 33142
Filed Mar. 2, 1977, Ser. No. 773,517
Int. Cl.² B21C *25/00;* **B21B** *15/00;* **B21C** *35/02;* **B65H** *37/00*
U.S. Cl. 72—256 **15 Claims**

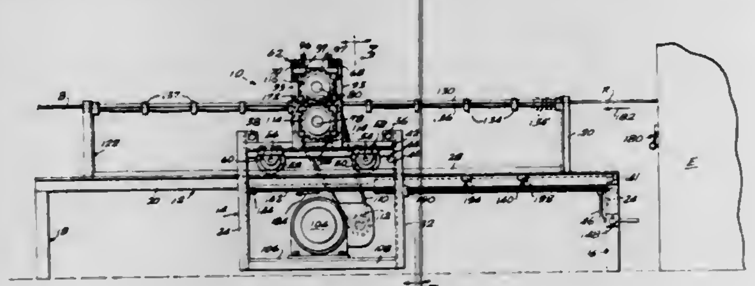

1. A device for imparting a continuous decorative design to a metallic extrusion as it emerges outwardly from an extruder in a relatively soft condition in a continuous rod form along a generally straight path of travel, and under the influence of a predetemined range of fluctuating outwardly directed pressure forces, said device comprising,

an elongated fixed frame including track means in a generally parallel relation to the straight path and including a forward end adjacent the extruder and a rear end,

a carriage trolley including wheel means for engagement on said track means for movement toward and away from the extruder,

upper and lower forming rollers, having one-to-one ratio, rotatably mounted on said carriage trolley in a peripheral rolling engagement with each other, at least one of said rollers being peripherally grooved with desired design characteristics formed in said groove, said forming rollers being positioned for passage of the continuous rod therebetween through said groove as it emerges from the extruder to impart the cross sectional shape of said groove and said design characteristics along the length of said extrusion,

means to exert a predetermined amount of outwardly directed pressure forces against said carriage trolley,

means to drive said forming rollers in predetermined opposite directions at alike predetermined numbers of revolutions per minute to substantially counter the combined outwardly directed forces of the continuous rod extrusion and said means to exert while permitting said carriage trolley to drift sequentially forwardly and backwardly in direct response to decreasing and increasing force fluctuations.

4,064,730
TUBE EXPANDER
Richard Gerretz, Viersen, Germany, assignor to Mannesmann Aktiengesellschaft, Dusseldorf, Germany
Filed Mar. 16, 1977, Ser. No. 778,227
Claims priority, application Germany, Mar. 18, 1976, 2611702
Int. Cl.² B21D *41/02*
U.S. Cl. 72—393 **2 Claims**

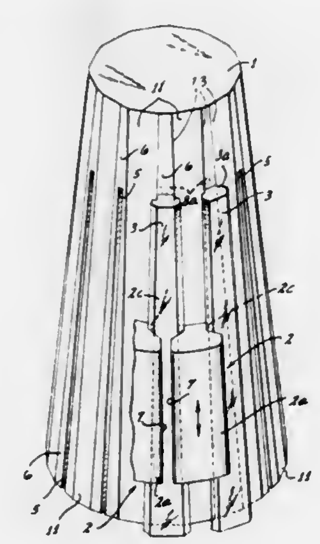

1. A mechanical expander for tubes comprising:

a trunkated polyhedral pyramid having a wide end and a narrow end, further having first glide surfaces being inclined with respect to the axis and having at least in parts rectangular configuration, second surfaces alternating with said first surfaces and being also inclined and having trapezoidal configuration, there being T-shaped longitudinal grooves in said second surfaces, ending ahead of the narrow end of said pyramid;

guide elements of double-T configuration having a stem portion, a first and a second crossbar portion, the first crossbar portions of said guide elements being respectively slid into said grooves, the second crossbar portion having lateral rail portions, whereby the rail portions of adjacent guide elements facing each other across one of the first surfaces extend parallel to each other;

means for securing the guide elements in a slid position of their respective first crossbar portions in the grooves; and

tube expanding segments slidably seated on said first surfaces and each having two lateral ridges respectively engaged with the rail portions of the guide elements disposed alongside the respective first surface and being guided therein.

4,064,731
DEVICE FOR INSERTING A HOT, HEAVY BLANK IN A DIE
Karl Ivar Brandstrom, Karlskoga, Sweden, assignor to AB Bofors, Bofors, Sweden
Filed Nov. 26, 1975, Ser. No. 635,570
Claims priority, application Sweden, Dec. 11, 1974, 7415512
Int. Cl.² B21D *43/16;* **B65G** *13/00*
U.S. Cl. 72—419 **14 Claims**

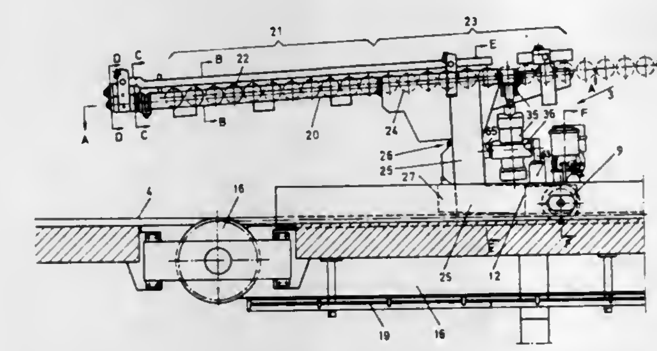

1. A device for inserting a hot, heavy blank into a die in a drop hammer or the like, comprising a car mounted for movement toward and away from the die, an upstanding supporting member on said car extending upwardly from said car in a direction transverse to the direction of movement of said car, an elongated unit mounted on said supporting member above said car for movement with said car, said elongated unit extending in a direction parallel to the direction of movement of said car and having a portion which projects as a cantilever from said supporting member forwardly of the front end of said car whereby movement of said car toward the die is adapted to move the forwardly projecting portion of said elongated unit into at least partially overlying relation to the die, said elongated unit including a pair of elongated shafts mounted for rotation about their respective axes of elongation, said shafts being disposed in spaced relation to one another and extending in the direction of movement of said car, a first plurality of elongated coplanar slide elements attached at one end to one of said rotatable shafts and extending in spaced relation to one another in directions transverse to the direction of elongation of said one shaft partially across the space between said shafts toward the other of said shafts, a second plurality of elongated coplanar slide elements attached at one end to said other rotatable shaft and extending in spaced relation to one another in directions transverse to the direction of elongation of said other shaft partially across the space between said shafts toward said one shaft, the free end of each of said first plurality of slide elements being disposed adjacent to and spaced from the free end of one of said second plurality of slide elements in the space between said shafts, said blank being adapted to be supported on said slide elements adjacent their respective free ends, spacer means extending between the forward ends of said shafts relative to said die for preventing said forward ends of said shafts from spreading apart from one another due to the weight of said blank, and positioning means on said car coupled to said elongated unit for rotating each of said elongated shafts through selected angles to vary the orientation of said coplanar pluralities of slide elements, transmission means interconnecting said shafts adjacent said forward ends of said shafts for causing the rotation of one shaft through a given angle in a given direction to effect synchronized rotation of the other shaft through said given angle in the opposite direction, said positioning means cooperating with said transmission means to selectively effect a first relative position of the slide elements in the forwardly projecting portion of said elongated unit wherein said first and second pluralities of slide elements in said forwardly projecting portion are disposed in substantially coplanar relation to one another, being operative to selectively effect a second relative position of the slide elements in said forwardly projecting portion of said elongated unit wherein said first plurality of coplanar slide elements are disposed in a plane inclined downwardly from said one shaft and said second plurality of coplanar slide elements are disposed in a plane oppositely inclined downwardly from said other shaft with the free ends of said first and second pluralities of slide elements being spaced from one another between said shafts by a distance less than the width of said blank to define a substantially V-shaped cradle for supporting the blank on said forwardly projecting portion at a position overlying the die forwardly of said car and below the plane defined by said pair of shafts, and being operative to effect a third relative position of the slide elements in said forwardly projecting portion similar to said second relative position of said slide elements but wherein the planes of said pluralities of slide elements in said forwardly projecting portion of said elongated unit are further inclined to space the free ends of said first and second slide elements from one another between said pair of shafts by a distance greater than the width of said blank to drop the blank from said V-shaped cradle into the die.

4,064,732
COIL ACTUATING APPARATUS IN A COIL SPRING MAKING MACHINE
Takeji Matsuoka, No. 2-703, 26, 3-chome, Ohjima, Kohto, Tokyo, Japan
Filed Sept. 8, 1976, Ser. No. 721,231
Int. Cl.² B21F *3/04*
U.S. Cl. 72—449 **2 Claims**

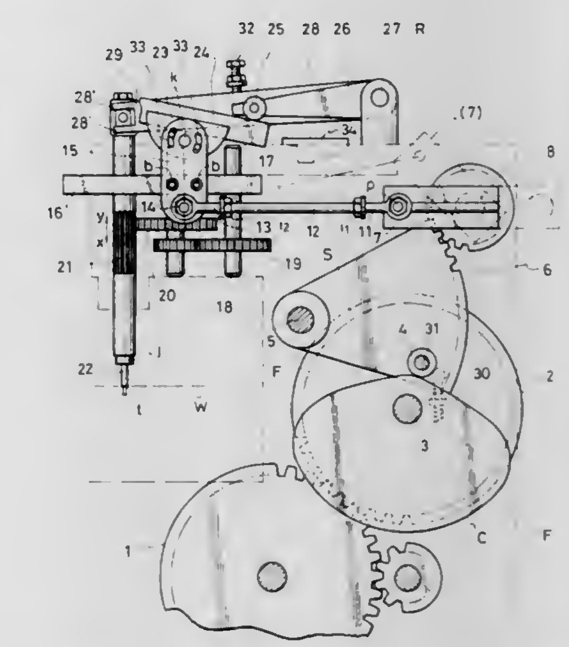

1. A coil actuating apparatus in a coil spring making machine, comprising a frame, a main cam secured to a cam shaft mounted on said frame, means to drive said cam mounted on said frame, a quadrant gear pivotally mounted on said frame carrying a cam follower in contact with an outer peripheral edge of said main cam, a return spring of which one end is secured to a lower portion of said quadrant gear, a driven gear meshing with an upper portion of said quadrant gear, a fastening member, a disc integral with said fastening member fixed to said driven gear, a first support shaft extending through and fixed in the center of said disc, a crank arm secured to one end of said support shaft, a connecting member pivotally connected at one end to said crank arm through a crank pin, a connecting rod connected at one end to the other end of connecting member, a further connecting member secured to the other end of said connecting rod, a connection pivotally secured to said second connecting member, a rack secured to a

lower portion of said connection, a pinion supporting a gear meshed with said rack, and a spindle gear carrying a winding shaft meshed with said gear, a setting position of said crank arm in relation to said driven gear being adjustable.

4,064,733
PRESS
Anatoly Sergeevich Grigorenko, ulitsa Tovstukho, 9, kv. 21; Vasily Savelievich Kravchenko, ulitsa Industrialnaya, 22, kv. 1; Jury Antonovich Moroz, ulitsa Fugenfirova, 11, kv. 91; Leonid Ivanovich Kortusov, prospekt Mira, 57-a, kv. 10, and Vladimir Ivanovich Vimba, ulitsa 50 let komsomola, 4-v, kv. 55, all of Omsk, U.S.S.R.
Filed Oct. 5, 1976, Ser. No. 729,874
Int. Cl.² B21J *9/12*
U.S. Cl. 72—453.03 **2 Claims**

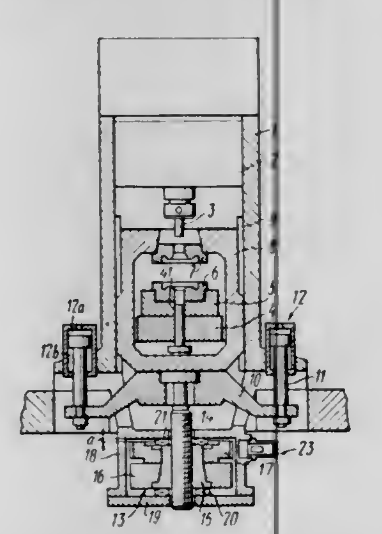

1. A press comprising: a frame; a plunger mounted on said frame for reciprocations; a stamping die comprising two dies; one die of said stamping die secured to said frame; an slide mounted in guides of said frame; the other die of said stamping die secured to said slide; said slide being reciprocably mounted for closing and opening said dies; means for clamping said dies during stamping comprising a nut-screw kinematic couple; one member of said kinematic couple adapted to perform linear motion, being connected to said slide; the other member of said kinematic couple adapted to perform rotary motiion; first and second discs mounted on said other member and adjoining each other in a first postion; said first disc fixedly connected to said other member; said second disc connected to said other member by a self-locking thread means for helical motion of said second disc relative to said first disc under the action of inertia forces following the closing of said dies for clamping the dies during stamping; a drive means for returning said second disc to said first position following stamping; and means for displacing said plunger and said slide.

4,064,734
HAMMER FORGING PRESSES
Hans J. Pahnke, Dusseldorf, Germany, assignor to Pahnke Engineering G.m.b.H. & Co. KG, Dusseldorf, Germany
Filed May 4, 1976, Ser. No. 683,078
Int. Cl.² B21J *13/04*
U.S. Cl. 72—455 **5 Claims**

1. A frame for a hammer forging press having a horizontal forging axis, said frame consisting of two vertical U-shaped frame members, one on each side of the forging axis of said press, a bed extending obliquely between said frame member generally at a right angle to the forging axis, said vertical members being positioned at an oblique angle to said forging axis, a top transom above the forging axis on top of and connecting said vertical members, a bottom transom including said bed beneath the forging axis and beneath and connecting said

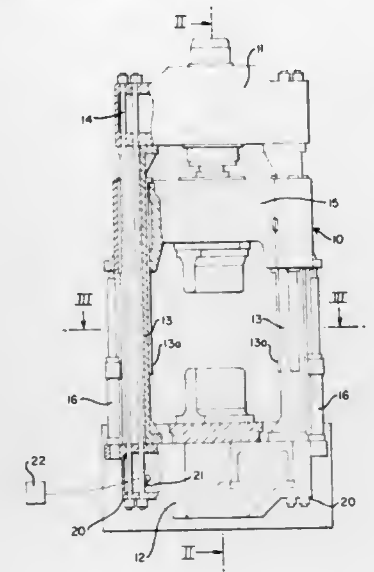

vertical members and at least four vertical tie rods connecting the top and bottom transoms.

4,064,735
EXCITATION AND SPECTRAL CALIBRATION OF ACOUSTIC EMISSION SYSTEMS
Thomas Sherret Hutchison, Kingston, and Stuart Livingstone McBride, Invarerary, both of Canada, assignors to Her Majesty the Queen in Right of Canada, as represented by the Minister of National Defence, Ottawa, Canada
Filed July 21, 1976, Ser. No. 707,181
Claims priority, application United Kingdom, Sept. 16, 1975, 037909/75
Int. Cl.² G01C *25/00*
U.S. Cl. 73—1 R **15 Claims**

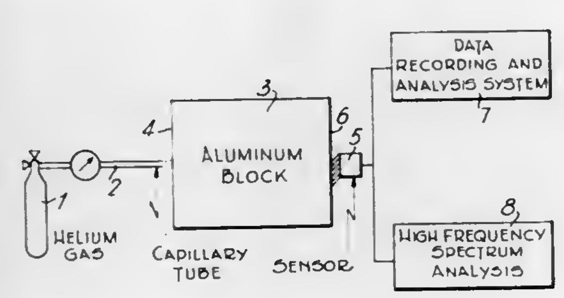

1. A method for spectral calibration of acoustic emission systems, comprising

a. acoustically coupling a first transducer, having a flat frequency response up to about 1 MHz, to a reference material;
b. exciting said reference material with a broad spectrum noise means, thereby generating an output signal from said first transducer;
c. measuring said output signal from said first transducer;
d. acoustically coupling a second transducer to a test piece and exciting said test piece with said broad spectrum noise means, thereby generating an output signal from said second transducer;
e. calibrating said output signal of said second transducer relative to said output signal of said first transducer;
f. measuring an acoustic emission spectrum from said test piece; and
g. correcting said acoustic emission spectrum relative to said calibrated output signal of said second transducer.

4,064,736
METHOD AND APPARATUS FOR MEASURING PERFORMANCE TIMES OF A SHUTTER APPARATUS
Tracy Ireland, 1203 S. Tyler, Loveland, Colo. 80537
Filed Oct. 1, 1976, Ser. No. 728,763
Int. Cl.² G04F *7/10*
U.S. Cl. 73—5 **25 Claims**

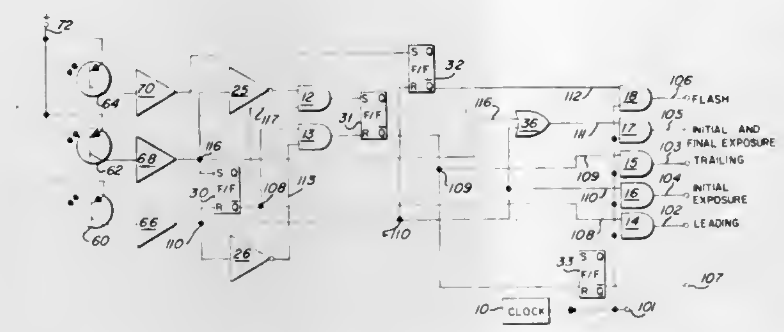

1. Apparatus for electrically measuring performance times of a camera shutter apparatus of the type having a leading curtain and a trailing curtain which are caused to traverse a focal plane aperture at different times for the usual purpose of exposing film when the shutter apparatus is operated, comprising:

first measuring means for measuring an elapsed time for a leading curtain to traverse a focal plane aperture;
second measuring means for measuring an elapsed time for a trailing curtain to traverse the focal plane aperture;
third measuring means for measuring a time period between the time that the leading curtain starts the traverse of the focal plane aperture and the time that the trailing curtain starts the traverse of the focal plane aperture; and
display means operative in conjunction with the first, second and third measuring means for displaying at least one of the times measured.

4,064,737
LABORATORY STAND ASSEMBLY
Walter Joseph Sieverin, Buffalo Grove, Ill., assignor to American Can Company, Greenwich, Conn.
Filed Oct. 21, 1976, Ser. No. 734,666
Int. Cl.² G01N *25/04*
U.S. Cl. 73—17 R **11 Claims**

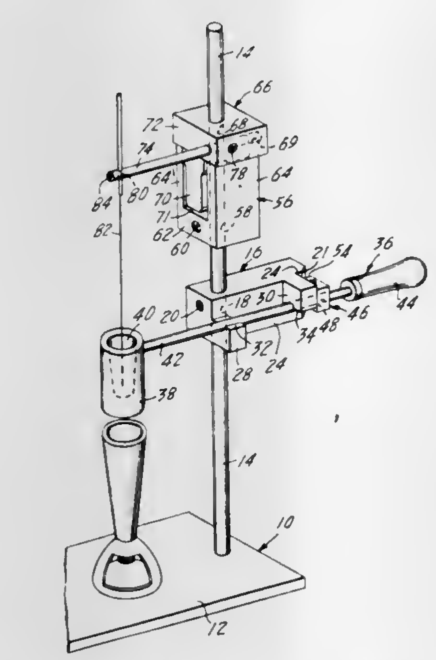

1. A laboratory stand assembly, comprising: a stand having a post, and being adapted to support said post in a generally upright position; a sample holder bracket mounted on said post of said stand and having a pair of horizontally and vertically spaced lugs extending outwardly from one side thereof; and a sample holder having a sample-receiving portion and an elongated handle portion extending from said receiving portion, said holder being disengageably supported on said holder bracket, adjacent said one side thereof, with said handle portion thereof engaged between said lugs of said bracket and constrained thereby against pivotal movement, to prevent downward movement of said receiving portion, said sample holder and said holder bracket each having means thereon which cooperate to constrain said receiving portion to a maximum spacing from said post, and each having means thereon which cooperate to prevent rotational movement of said holder about the axis of said handle portion thereof.

4,064,738
VIBRATION DENSITOMETER
Milton H. November, Hacienda Heights, Calif., assignor to International Telephone and Telegraph Corporation, New York, N.Y.
Filed Feb. 7, 1977, Ser. No. 766,265
Int. Cl.² G01N *9/00*
U.S. Cl. 73—32 A **2 Claims**

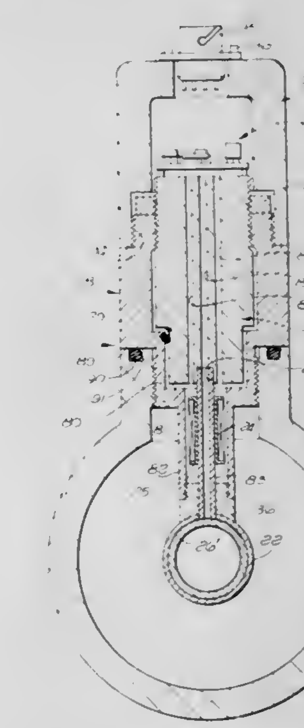

1. A vibration densitometer comprising: an electromechanical oscillator including a probe and a feedback circuit connected in a loop; a function generator connected from said feedback circuit; and utilization means connected from said function generator, said probe including inner and outer concentric cylinders fixed relative to each other, said outer cylinder having a hole extending radially therethrough, a shaft slidable through said hole in engagement with said inner cylinder, and means to vibrate said shaft in the direction of its axis to cause vibration of said inner cylinder, said outer cylinder being completely hollow except for said inner cylinder positioned therein, said inner cylinder being hollow completely therethrough.

4,064,739
DENSITOMETER
Milton H. November, Hacienda Height, and LaVerne D. Lyon, Claremont, both of Calif., assignors to International Telephone and Telegraph Corporation, New York, N.Y.
Division of Ser. No. 709,582, July 29, 1976, Pat. No. 4,037,460. This application Feb. 7, 1977, Ser. No. 766,224
Int. Cl.² G01N *9/00*
U.S. Cl. 73—32 A **8 Claims**

1. A vibration densitometer comprising: an electromechanical oscillator including a probe having input and output leads, and a loop circuit having an input lead connected from said probe output lead and an output lead connected from said probe input lead; a lower mounting body having a cylindrical passageway therethrough; a hollow cylindrical well; means mounting said well concentrically within said passageway, said probe being fixed inside said well, said probe having a vane

supported near the bottom of said well; driver means to vibrate said vane, said driver means being located above said vane, said driver means including a cylindrical housing disposed concentrically within said well contiguous to said well; an

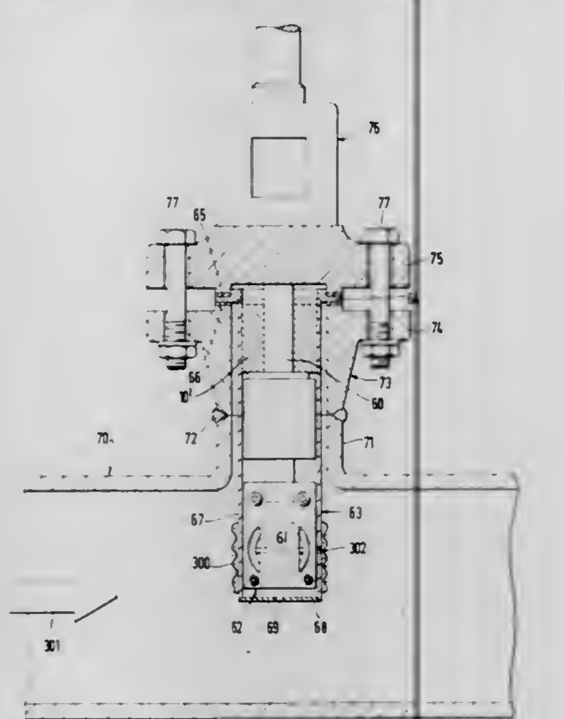

upper mounting; a cylindrical extension fixed to said upper mounting and attached to said driver means cylindrical housing concentrically therewith and concentric with said well in spaced relation to said well; and an annular body positioned around said extension.

4,064,740
APPARATUS AND METHOD FOR MEASURING PERMEABILITY
Edward Lewis Crosby, Jr., Indialantic, Fla., assignor to RCA Corporation, New York, N.Y.
Filed Oct. 22, 1976, Ser. No. 734,728
Int. Cl.^{2} G01M *3/26*
U.S. Cl. 73—38 **9 Claims**

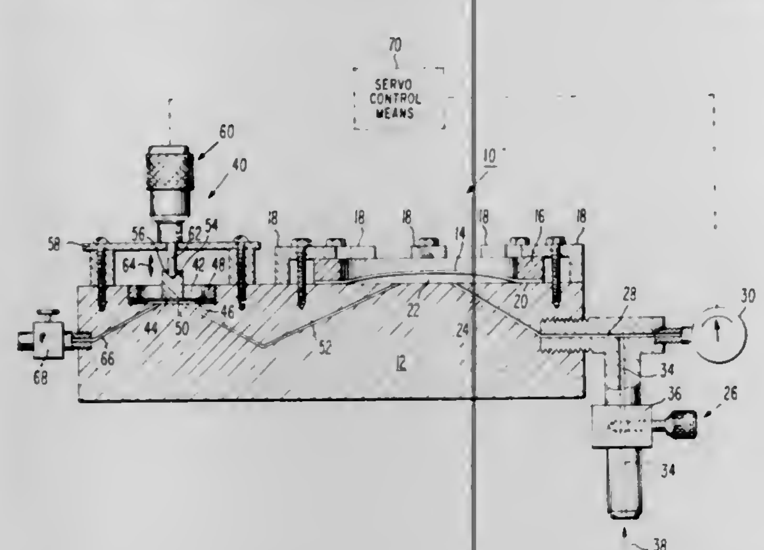

1. An apparatus for measuring the permeability of a material to a gas comprising:
support means impermeable to said gas;
clamp means for clamping said material to said support means and forming a test chamber between said material and said support means;
means in fluid communication with said test chamber for filling said chamber with said gas at a given test pressure value which tends to decrease, with time, to a lower test pressure value as said gas passes through said material;
diaphragm means in fluid communication with said test chamber secured to said support means and forming a chamber therebetween for supplying sufficient gas to said test chamber for returning the pressure therein to said given value and including means connected to said support means for displacing said diaphragm means to thereby alter the volume of said last-mentioned chamber; and
means for indicating the volume of gas required to return said pressure within said chamber to said given value, said volume and the time during which the gas is permitted to pass through said material being indicative of the permeability, as a function of time, of said material.

4,064,741
REAL-TIME ULTRASONIC IMAGING SYSTEM
Charles A. Reynolds, West Haven, Conn., assignor to Smith-Kline Instruments, Inc., Sunnyvale, Calif.
Filed Nov. 22, 1976, Ser. No. 744,081
Int. Cl.^{2} G01N *29/04*
U.S. Cl. 73—620 **24 Claims**

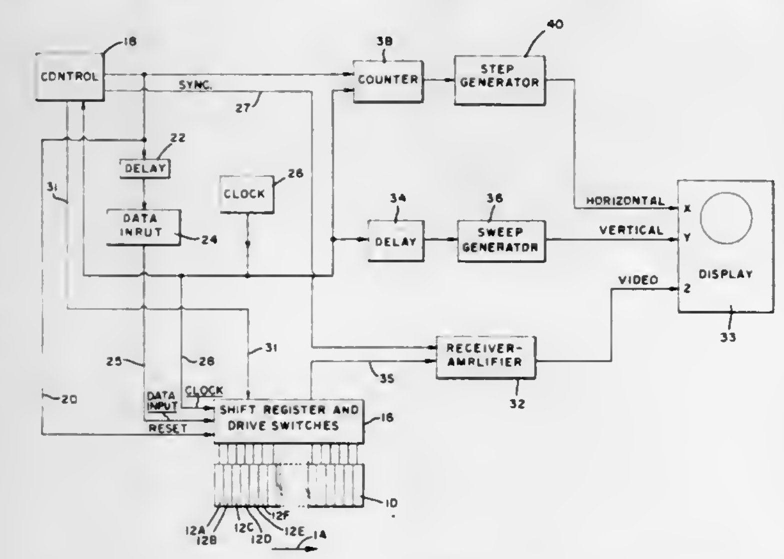

24. A real-time ultrasonic cross-sectional imaging system including in combination:
a segmented transducer array formed of juxtaposed elements;
means coupled to said array for energizing a selected group comprising a predetermined quantity of juxtaposed elements for causing each element in said group to simultaneously transmit acoustic energy into an object to be examined and to receive echo responsive signals arising from an acoustic discontinuity in the object;
means coupled to said means for energizing for sequentially shifting said group of elements along said array for providing a scan of said array;
cathode ray tube display means coupled to said array and said means for sequentially shifting for displaying on a screen of said tube an image of said echo responsive signal;
the improvement comprising:
means coupled to said means for sequentially shifting and to said display means for causing each scan of said array to appear on the screen of said tube as a set of spaced lines along an axis of said screen and two successive scans to provide an interlaced pattern of said lines.

4,064,742
ULTRASONIC INSPECTION DEVICE
Richard J. Pittaro, Stamford, Conn., assignor to Krautkramer-Branson, Incorporated, Stratford, Conn.
Filed Jan. 31, 1977, Ser. No. 764,343
Int. Cl.^{2} G01N *29/04*
U.S. Cl. 73—611 **8 Claims**

5. A pulse-echo ultrasonic apparatus comprising:
a clock for producing periodic trigger signals;
pulser means coupled for receiving said trigger signals and producing respective transmit pulses;
ultrasonic probe means adapted to be acoustically coupled to a workpiece and connected for receiving said transmit

pulses for causing respective ultrasonic search signals to be transmitted into the workpiece and to receive echo signals arising from said search signal intercepting the entrant surface and defects in the workpiece and providing electrical echo responsive signals responsive thereto;
receiver means coupled to said probe means for receiving said electrical echo responsive signals and providing respective echo responsive electrical signals;
address means for providing a programmed count signal commensurate with the acoustic velocity of the workpiece;
measuring clock means coupled for receiving said programmed count signal, said entrant surface responsive electrical signal and said trigger signals for providing

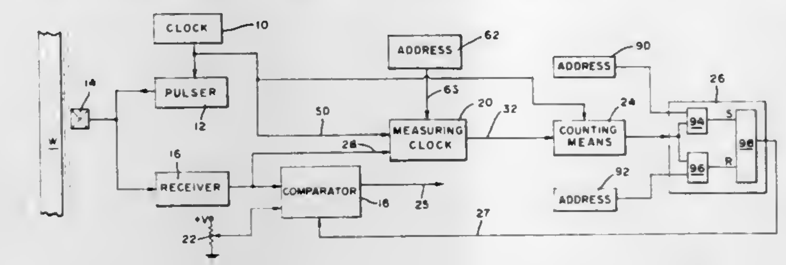

clock pulses synchronized with said entrant surface responsive electrical signal and having a frequency commensurate with said programmed count signal;
counting means coupled for receiving said clock pulses for providing a count signal commensurate with the quantity of clock pulses received by said counting means;
further address means for providing signals defining a predetermined region of the workpiece to be examined, and
gate generating means coupled to said counting means and said further address means for receiving said count signal and said signals defining a region of the workpiece and providing a defect gate during the interval that echo responsive electrical signals arising from defects disposed in said predetermined region of the workpiece are to be received.

4,064,743
UNIVERSAL EYE PRESSURE IMPULSE TONOMETER AND METHOD OF MEASURING THE INTRA-OCULAR PRESSURE
Antonio Foddis, Viale A. Diaz (Grattacielo p.1), 29, Cagliari, Italy
Filed June 24, 1976, Ser. No. 699,276
Int. Cl.^{2} A61B *9/00*
U.S. Cl. 73—80 **8 Claims**

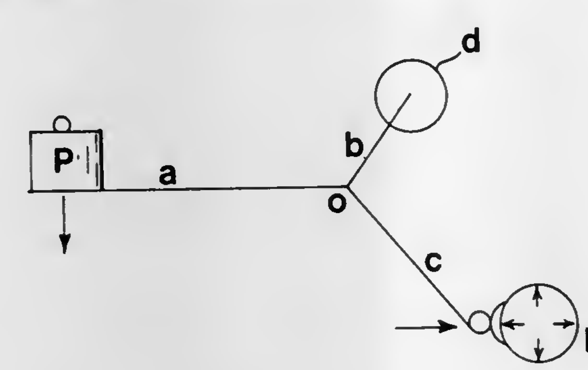

6. A method of measuring the intra-ocular pressure, comprising the steps of placing a three-armed structure with a first arm in a horizontal position and a second and third arm extending respectively upwardly and downwardly from one end of said first arm, said second and third arms being rigidly connected to said first arm, bringing a measuring body on the free end of said third arm into engagement with the eyeball, applying a weight to said first arm to exert a pressure on the eyeball through said three-armed structure and said measuring body, said pressure producing an increase of the intra-ocular pressure, suddenly removing the weight from said first arm whereby said increased intra-ocular pressure will cause oscillation of said three-armed structure about an axis of oscillation formed by the point of connection between said three arms, and measuring the amplitude and duration of said oscillations.

4,064,744
STRAIN SENSOREXTENSIOMETER
Walter P. Kistler, Redmond, Wash., assignor to Kistler-Morse Corporation, Bellevue, Wash.
Filed June 4, 1976, Ser. No. 692,977
Int. Cl.^{2} G01B *7/16;* **G01L** *1/22*
U.S. Cl. 73—88.5 R **11 Claims**

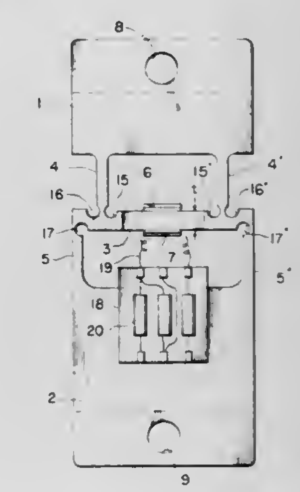

1. A strain measuring instrument with electrical output, comprising two end sections through which the instrument can be attached to a structure and a mid-section including a beam arranged substantially perpendicular to the instrument axis and mechanically connected to the end sections through two pairs of symmetrically arranged but unequally spaced flexible bridges and carrying at least two strain responsive resistive elements, said end sections and beam being integrally formed by a solid metal bar having a generally rectangular cross section.

4,064,745
METHOD OF PROVIDING REPRESENTATION OF AGING OF MATERIAL
Friedbert Gaddum, Schulstrasse 6, 3031 Ahlden, Aller, Germany
Filed May 20, 1976, Ser. No. 688,420
Claims priority, application Germany, May 21, 1975, 2522362
Int. Cl.^{2} G01N *3/32*
U.S. Cl. 73—91 **6 Claims**

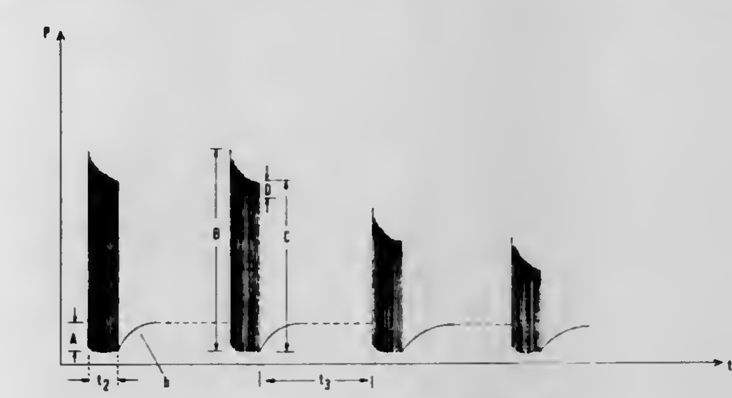

1. Method of determining and measuring aging and/or age-dependent properties of a specimen comprising the following steps:
first, subjecting the specimen to alternating mechanical load-no-load conditions for a period during which the maximum reaction force effective during sequential load phases still declines;
second interrupting the first mentioned step for a period longer than a period needed for about 70% to 80% recovery of the specimen, the recovery being or would be

completed when, following a load change, the reaction force has again reached a constant level;
repeating the first and second steps in cyclic fashion; and
measuring the reaction force on the specimen.

4,064,746

PARAMETER CONTROLLED SPEED DETERMINATION IN INTERNAL COMBUSTION ENGINE DIAGNOSTICS

Henry J. Mercik, Jr., and Lee R. Armstrong, both of Enfield, Conn., assignors to United Technologies Corporation, Hartford, Conn.

Filed May 7, 1976, Ser. No. 684,039

Int. Cl.² G01L *3/00*

U.S. Cl. 73—116 **9 Claims**

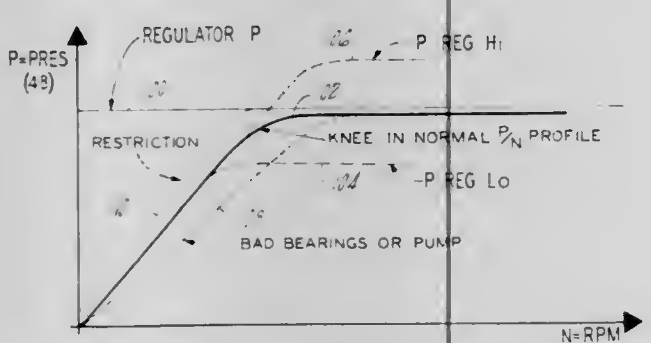

1. In the method of testing the oil system of an internal combustion engine, the steps of:
accelerating an engine while loaded only with its own inertia, drag and accessory loads;
measuring a rate of change of pressure as the engine accelerates;
determining a decreasing slope in said rate; and
determining the oil pressure and the engine speed at the determined point of decreasing slope.

4,064,747

RELATIVE AND SUB-CYCLIC SPEED MEASUREMENTS FOR INTERNAL COMBUSTION ENGINE DIAGNOSTICS

Richard J. Rackliffe, Agawam, Mass.; Harvey J. Goodfriend, Simsbury, and Lee R. Armstrong, Enfield, both of Conn., assignors to United Technologies Corporation, Hartford, Conn.

Filed May 7, 1976, Ser. No. 684,033

Int. Cl.² G01M *15/00*

U.S. Cl. 73—116 **7 Claims**

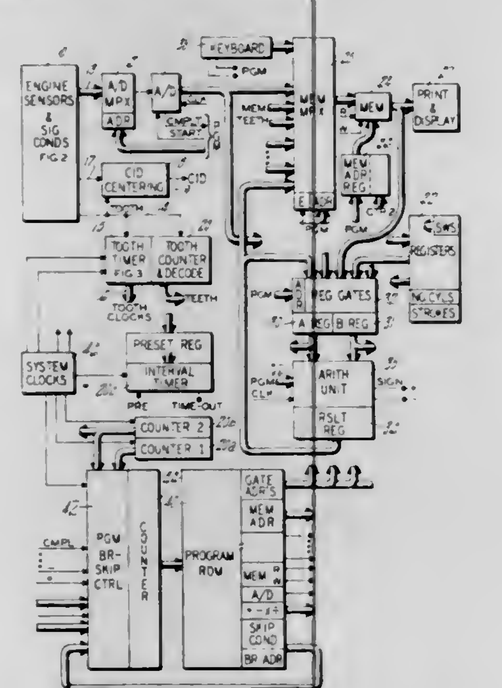

7. In a method of determining relative sub-cyclic dynamic operating conditions of a reciprocating internal combustion engine, the steps of:
measuring the time required for the engine to rotate through substantially equal, successive small angles, said angles being a fraction of the angle of revolution of the engine allocated to the power stroke for each cylinder thereof;
measuring a full cycle of engine revolutions, said full cycle of engine revolutions comprising one revolution in a two stroke engine and two revolutions in a four stroke engine;
measuring angles which comprise a substantial portion of a power stroke of each cylinder and angles which comprise cylinder to cylinder angular increments from the beginning of said power stroke angles;
and determining the speed at the start of each power stroke angle and at the end of each of said power stroke angles for each of said cylinders, taking the difference between the start and end speed for each of said cylinders to provide a measure of acceleration therefore, and indicating said accelerations in a manner to describe relative cylinder power contribution.

4,064,748

POWER INDICATING MEANS AND METHOD FOR AN INTERNAL COMBUSTION ENGINE

Ervin Leshner, and Michael D. Leshner, both of Cherry Hill, N.J., assignors to Fuel Injection Development Corporation, Bellmawr, N.J.

Filed Aug. 19, 1976, Ser. No. 715,836

Int. Cl.² G01M *15/00*

U.S. Cl. 73—117.3 **15 Claims**

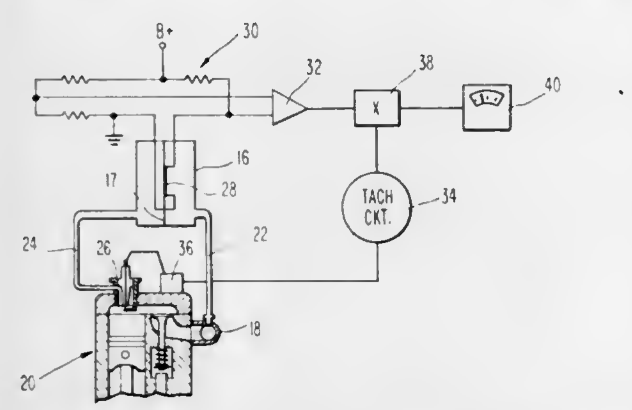

13. The method of producing an indication of the torque being developed by an internal combustion engine, comprising the steps of:
deriving a first manifestation of pressure arising within a cylinder of the engine;
deriving a second manifestation of pressure arising in the inlet manifold of the engine; and
continuously algebraically summing said first and second manifestations to obtain the difference therebetween said difference comprising an indication of torque.

4,064,749

METHOD AND SYSTEM FOR DETERMINING FORMATION POROSITY

Robert W. Pittman, Sugarland, and Chester E. Hermes, Houston, both of Tex., assignors to Texaco Inc., New York, N.Y.

Filed Nov. 11, 1976, Ser. No. 740,998

Int. Cl.² E21B *49/00*

U.S. Cl. 73—152 **8 Claims**

1. Method for determining porosity of a formation from drilling response, wherein a bit is attached to the lower end of a drill string that is rotated while the downward force on said bit is controlled, comprising the steps of
measuring the revolutions of said bit,
measuring the depth of said bit in the borehole,
measuring the weight on said bit,

determining the tooth dullness of said bit,
measuring the torque applied to said drill string,
determining a reference torque empirically, and

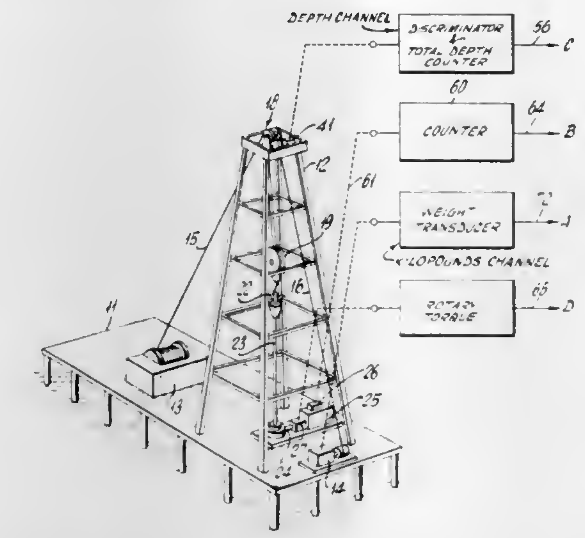

determining said porosity of combining said measurements and determinations.

4,064,750

GAS FLOW TOTALIZER

Richard E. Speece, 2123 Reynolds St., Falls Church, Va. 22043

Filed June 1, 1976, Ser. No. 691,763

Int. Cl.² G01F *3/00*

U.S. Cl. 73—194 R **14 Claims**

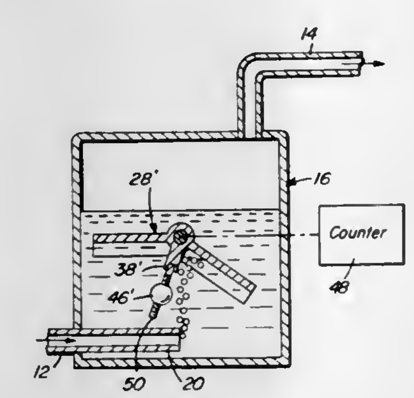

1. In a meter for measuring the flow of a fluid through a conduit, a container connected to said conduit and through which said fluid flows, a static body of fluent medium of substantially constant quantity enclosed within said container and having a density greater than said fluid, inlet means connected to said conduit for discharging the fluid into the body of fluent medium from a predetermined location therewithin, fluid entrapping means submerged within the body of fluent medium for displacement in response to accumulation of a predetermined quantity of the fluid prior to separation from the body of fluent medium, and means mounting the fluid entrapping means for displacement between operative receiving and releasing positions in which the fluid is accumulated within the entrapping means and escapes therefrom, respectively.

4,064,751

FLOWMETER

Norbert F. Deisenroth, Des Plaines; John P. Nordhaus, Northbrook, and Abe Siegelman, Morton Grove, all of Ill., assignors to Elematic Instrument Corporation, Morton Grove, Ill.

Filed Oct. 18, 1976, Ser. No. 733,182

Int. Cl.² G01F *1/40*

U.S. Cl. 73—207 **12 Claims**

1. A flowmeter comprising
A. a housing having means defining a fluid flow path through the housing and including inlet and outlet ports communicating with the path and adapted respectively to be connected to a fluid source and fluid output means, the flowmeter adapted to measure pressure differential between said inlet and outlet ports,
B. said fluid flow path including a hollow, elongate tubular member and means mounting and guiding the tubular member for rectilinear axial movement within said housing, the interior of said tubular member comprising an elongate passageway having a fluid connection with said outlet port adjacent one end of said tubular member and the mounting and guiding means including biasing means urging the tubular member to move axially in the direction of the second end of said tubular member,
C. said mounting and guiding means having a fluid pressure responsive axially facing portion located adjacent the second end of the tubular member and connected therewith and generally coaxial thereof adapted to move the tubular member against urging of the biasing means when the said portion is subjected to fluid pressure greater than the said urging, said elongate passageway having an entrance at the second end of said tubular member in the center of said axially facing portion,
D. said housing having a fluid inlet chamber formed at least adjacent to the axially facing portion with the axially facing portion exposed to said fluid inlet chamber, a projection formed in said housing and having an annular seat in alignment with said axially facing portion and said axially facing portion being urged towards said seat in response to said biasing means to constrict said entrance, said fluid inlet chamber being otherwise fluid-isolated from the outlet port and said fluid connection,

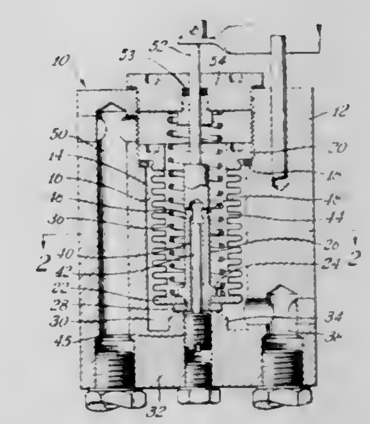

E. a rigid rod mounted to said housing in the center of said seat coaxial with the elongated passageway and extending substantially fully into said passageway when said portion is in its most constricting position, but being of lesser cross section than the passageway to form a narrow fluid flowing space around the rod in the passageway, the said fluid connection comprising an opening in the tubular member located beyond the furthest penetration of the rod, said rod adapted to be withdrawn from said passageway when fluid is admitted to said fluid inlet chamber at a pressure which is sufficient to move said axially facing portion from its most constricted condition away from said seat to increase the distance thereof from said seat and thereby move the tubular member against the urging of said biasing means,
F. the cross sectional configuration of the interior of the passageway and that of the rod each being uniform along a substantial portion of the axial length of both where they are opposite one another during movement of said tubular member,
G. the penetration of the rod into the passageway comprising a fluid resistance section in the flow of fluid through the housing in the said fluid flowing space between rod and passageway whose fluid resistance varies linearly with the pressure drop between the said inlet chamber and the outlet port and with the axial movement of the said tubular member and
H. said tubular member having means for providing an

indication externally of said housing of the amount of movement of said tubular member.

4,064,752
REMOTE MULTIPLE TANK LIQUID LEVEL MEASURING DEVICE
Frank W. Murphy, Jr., Bixby, and Buddy G. Sparks, Tulsa, both of Okla., assignors to Frank W. Murphy Manufacturer, Inc., Tulsa, Okla., a part interest
Filed Oct. 21, 1976, Ser. No. 734,658
Int. Cl.² G01F *23/14*
U.S. Cl. 73—302 **1 Claim**

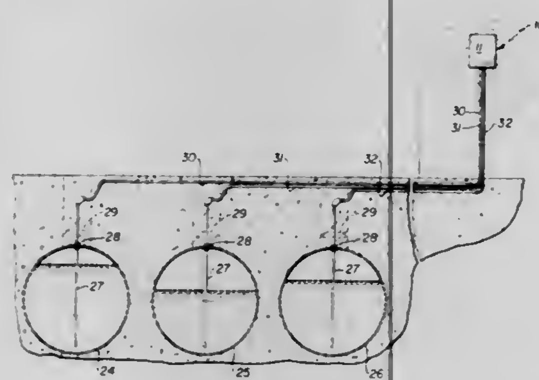

1. A liquid level monitoring apparatus for plural remote underground storage tanks at an automobile service station comprising in combination a lockable steel security box for mounting on an interior wall of an automobile service station office, a pressure responsive measuring gage within the security box and having a dial calibrated in linear depth units of liquid product in said underground storage tanks, said gage being common to all of said tanks, a hand-operated rotary selector valve within the security box and having a rotary tank selector handle and a coacting indicia plate indicating tank selector positions for the handle, plural conduits connected with the rotary selector valve and anchored to and extending through a wall of the security box and terminating at locations near the bottoms of said underground tanks, the rotary selector valve having an inlet, a hand-operated elastic squeeze bulb having a one-way check valve and serving as an atmospheric air pump, said check valve closing when said squeeze bulb is compressed and opening during expansion of the squeeze bulb to admit atmospheric air, a conduit interconnecting said rotary selector valve inlet with said pressure responsive gage, a T-coupling in the last-named conduit and connected with the elastic squeeze bulb, whereby atmospheric air can be pumped simultaneously to the gage and selector valve inlet, said rotary selector valve being operable to place one underground tank at a time in fluid communication with said gage through one of said first-named conduits while blocking fluid communication between the other tanks and said gage.

4,064,753
RF ADMITTANCE MEASURING METHOD AND APPARATUS FOR DETERMINING THE LEVEL OF A CONDUCTIVE LIQUID
Robert J. Sun, Bala Cynwyd, and Frederick L. Maltby, Jenkintown, both of Pa., assignors to Drexelbrook Controls, Inc., Horsham, Pa.
Filed Dec. 12, 1974, Ser. No. 532,208
Int. Cl.² G01F *23/26, 11/20*
U.S. Cl. 73—304 C **40 Claims**

1. A probe system for measuring the level of a substantially conductive liquid in a vessel, said probe system comprising:
a probe adapted to be mounted on a surface of said vessel so as to extend through the surface level of said liquid said probe including
a conductive probe electrode extending longitudinally along the probe adjacent the front thereof and away from said surface,
conductive guard electrode means extending longitudinally along the probe, said guard electrode means including lateral portions extending laterally outwardly from a portion of said probe electrode;
interior solid insulation means supporting said probe electrode and said guard electrode means; and
exterior solid insulation means covering said conductive probe electrode and said guard electrode means so as to provide an external surface in contact with the conductive liquid, such that said lateral portions are substan-

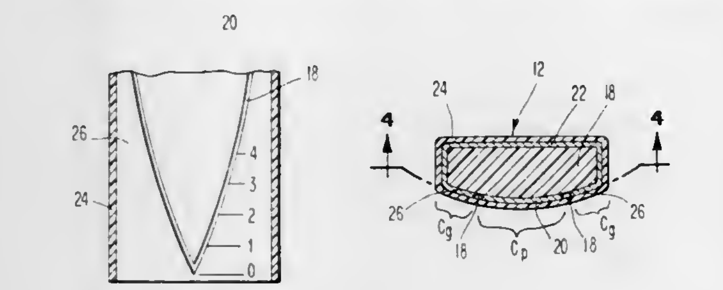

tially as closely coupled to the surface as said probe electrode is coupled to the surface, said lateral portions extending laterally outwardly beyond said portion of said probe electrode a distance at least six times greater than the thickness of said solid insulation means covering said guard electrode means divided by the dielectric constant of the solid insulation means; and
means for maintaining the potential of said guard electrode means at substantially the same potential as said probe electrode.

4,064,754
METHOD FOR MEASURING THE FILLING LEVEL IN CONTAINERS AND APPARATUS FOR PERFORMING THE METHOD
Markus Frey, Zurich, Switzerland, assignor to ITO-Patent AG, Zurich, Switzerland
Filed Dec. 29, 1976, Ser. No. 755,270
Int. Cl.² G01F *23/10, 23/12*
U.S. Cl. 73—313 **19 Claims**

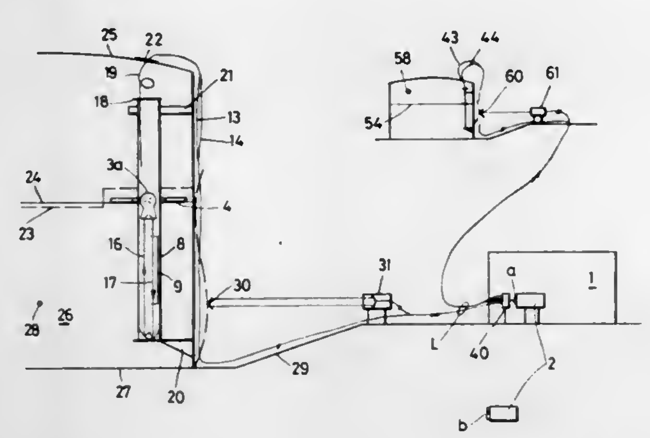

1. An apparatus for measuring the filling level of a liquid in a container, comprising a light source, first and second reflecting means, said first reflecting means being positioned in said container, means for floating said second reflecting means in said container, an optical reference path extending between said source and said first reflecting means, an optical measuring path extending between said source and said second reflecting means, said measuring path comprising a non-solid light conductive path extending at least between a fixed position in said container and said second reflecting means, and means for measuring the difference in propagation time of light from said source in said first and second paths.

4,064,755
LIQUID LEVEL SENSOR
Edgar A. Bongort, Southfield, and William T. Cruickshank, Pontiac, both of Mich., assignors to B/W Controls, Inc., Birmingham, Mich.
Division of Ser. No. 627,518, Oct. 31, 1975. This application Jan. 12, 1977, Ser. No. 758,568
Int. Cl.² G01F *23/12;* **H01H** *36/00*
U.S. Cl. 73—313 **7 Claims**

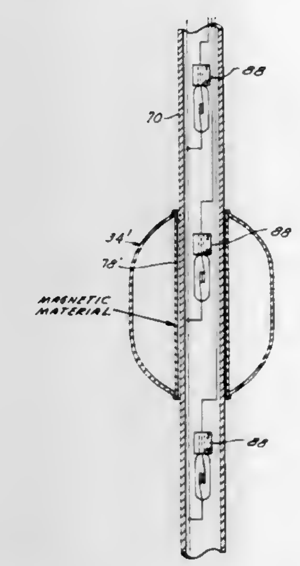

1. A liquid level sensor comprising, in combination:
a guide tube for vertical positioning in the liquid whose level is to be sensed;
a float externally surrounding the guide tube for longitudinal movement thereon to rise and fall with the liquid level and having a portion of magnetic material of low residual magnetism encircling the guide tube;
a reed switch in the guide tube having reeds of low residual magnetism extending substantially parallel to the axis of the guide tube;
a bias magnet in the guide tube adjacent one end of the reed switch with the magnet poles facing in opposite directions longitudinally of the guide tube; and
said portion of magnetic material on the float functioning as a field conductor for the magnetic field of the bias magnet causing the switch reeds to open and remain open as the float passes by them moving in one direction, and close and remain closed as the float passes them moving in the opposite direction.

4,064,756
INSTRUMENT ASSEMBLY
John P. MacLean, Stafford, and John C. Strickland, Houston, both of Tex., assignors to Texaco Inc., New York, N.Y.
Filed Nov. 12, 1976, Ser. No. 741,279
Int. Cl.² G01K *13/02*
U.S. Cl. 73—349 **7 Claims**

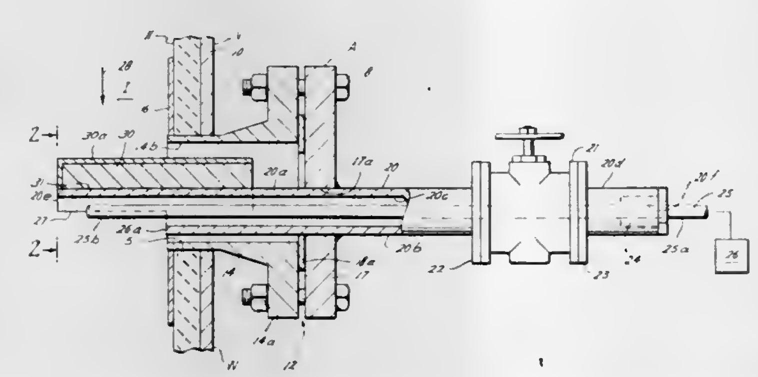

1. An instrument assembly adapted for mounting on a vessel for indicating a condition therein, comprising:
a flange assembly mounted in a wall of such vessel;
a hollow mounting tube mounted on said flange assembly for extending through an opening in the wall of such vessel into the interior thereof;
a condition-sensitive means positioned in a thermowell in said mounting tube for extending through an opening in the wall of such vessel;
said mounting tube being a preselected thickness and having an opening on the downstream side thereof for positioning within said vessel downstream of any fluid flow therethrough, said condition-sensitive means being exposed to fluid of said fluid flow through said downstream opening in said mounting tube to the interior of such vessel; and
a shield having a width of at least equal to the diameter of said mounting tube and securedly mounted on said mounting tube opposite from said mounting tube opening for being positioned upstream of any fluid flow in such vessel having a solid surface on the upstream side of said mounting tube for diverting all fluid flow around said mounting tube for preventing erosion of the mounting tube and of the condition-sensitive means therein for at least partly projecting said condition-sensitive means from deleterious effects of fluid flow through such vessel while obtaining accurate information of the fluid condition therein.

4,064,757
GLASSY METAL ALLOY TEMPERATURE SENSING ELEMENTS FOR RESISTANCE THERMOMETERS
Ryusuke Hasegawa, Morristown, N.J., assignor to Allied Chemical Corporation, Morris Township, N.J.
Filed Oct. 18, 1976, Ser. No. 733,628
Int. Cl.² C22C *16/00, 25/00;* **G01R** *19/00*
U.S. Cl. 73—362 AR **18 Claims**

1. A temperature sensing element, comprising for low temperature resistance thermometers
a. a body of a metal alloy that is at least 50% glassy having a composition consisting essentially of about 20 to 45 atom percent beryllium, about 2 to 80 atom percent zirconium, about 0.5 to about 2 atom percent of at least one metal selected from the group consisting of vanadium, chromium, manganese, iron, nickel and cobalt, and the balance essentially titanium and incidental impurities; and
b. electrically conductive leads attached thereto.

13. In a process for measuring low temperatures which comprises measuring a signal generated by a temperature sensing element of a resistance thermometer which is electrically connected to a temperature indication means, the improvement which comprises employing as the temperature sensing element a body of metal alloy that is at least 50% glassy having a composition consisting essentially of about 20 to 45 atom percent beryllium, about 2 to 80 atom percent zirconium, about 0.5 to about 2 atom percent of at least one metal selected from the group consisting of vanadium, chromium, manganese, iron, nickel and cobalt, and the balance essentially titanium and incidental impurities.

4,064,758
PRESSURE TRANSDUCER STRUCTURE
Arthur Michael Harrison, Los Angeles, Calif., assignor to Micron Instruments, Los Angeles, Calif.
Filed Oct. 13, 1976, Ser. No. 731,546
Int. Cl.² G01L *9/06*
U.S. Cl. 73—398 AR **7 Claims**

1. A pressure transducer structure for a pressure transducer of the type comprising a hollow transducer housing, a diaphragm provided in one end of said housing, a plurality of strain sensors provided in said housing and a connecting cable, the improvement comprising:
a bowed, flexible elongated non-conductive board having two ends provided in said housing adjacent said strain

sensors and engaging the inside surface of said housing at both ends of said board; and

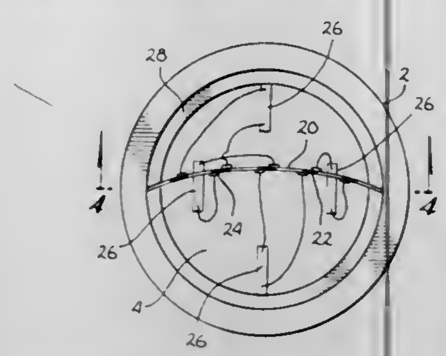

a plurality of conductors provided in said board for electrically coupling said strain sensors at one end of said conductors and said cable at the other end of said conductors.

4,064,759
PRESSURE MEASURING DEVICE
Charles Koehler, 184 Pebble Ridge Road, Warrington, Pa. 18976
Filed Nov. 26, 1976, Ser. No. 744,991
Int. Cl.² G01L *7/02*
U.S. Cl. 73—409 **9 Claims**

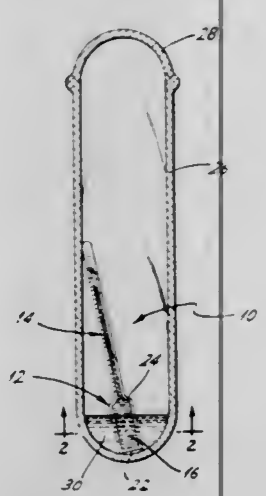

1. A pressure-measuring device comprising a closed glass member including a hollow pressure-sensing portion and a hollow pressure-indicating portion communicating with said pressure-sensing portion, said pressure-sensing portion being a generally rectangular container including a first pair of opposite walls having a width significantly greater than the width of a second pair of opposite walls, said container being filled with an incompressible fluid whereby when said glass member is placed in a pressurized medium said first pair of walls deform causing displacement of said incompressible fluid to provide an indication of the pressure of the medium.

4,064,760
STERILE URINE COLLECTION DEVICE
Thomas A. Benjamin, Glen Gardner, N.J., assignor to IPCO Hospital Supply Corporation, White Plains, N.Y.
Filed Dec. 15, 1976, Ser. No. 750,591
Int. Cl.² G01N *1/20*
U.S. Cl. 73—421 R **21 Claims**

1. A urine collection device comprising a container, a lid closing said container, a funnel assembly mounted over said lid, said lid having an opening therein, said funnel assembly having a funnel member extending through the opening in the lid, a funnel cover mounted over the funnel assembly, a seal removably mounted on the device, said seal being adapted to be removed from the device and to be affixed to the lid to close

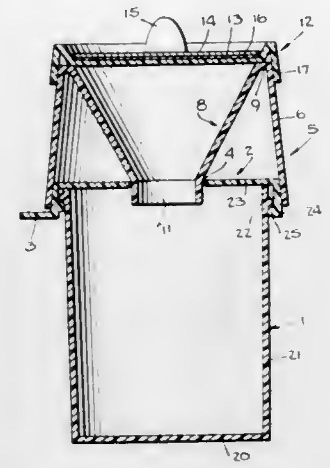

the opening in the lid after the container is used and the funnel removed.

4,064,761
METHOD AND APPARATUS FOR ASCERTAINING AND INDICATING THE ANGULAR POSITION OF AN UNBALANCE IN A ROTOR
Alfred Giers, Rossdorf; Paul Holdinghausen, Bickenbach; Hatto Schneider, Heppenheim-Kirschhausen, and Friedhelm Widmann, Seeheim, all of Germany, assignors to Firma Carl Schenck AG, Darmstadt, Germany
Filed Oct. 28, 1976, Ser. No. 736,372
Claims priority, application Germany, Oct. 31, 1975, 2548729
Int. Cl.² G01M *1/22, 1/08*
U.S. Cl. 73—462 **19 Claims**

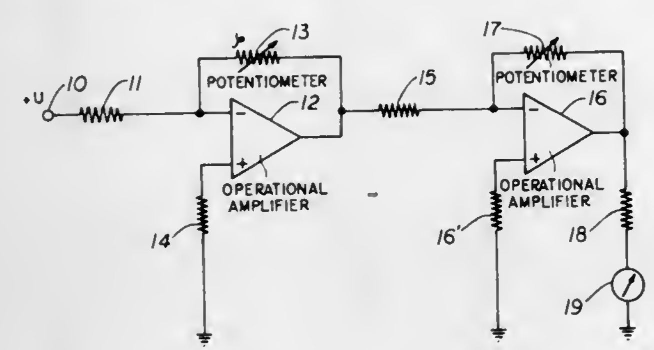

1. A method for indicating the angular position of an unbalance in a rotary body to be balanced in a balancing machine, comprising ascertaining the angular position of the unbalance with respect to a reference on the body, in the form of an angular position representing electrical signal, transforming said angular position representing electrical signal to correspond to linear measurement units which are automatically referenced to the circumference of the body to be balanced, whereby these measurement units are transferrable to the circumference of the rotary body, and supplying said transformed and referenced electrical signals to an indicator means for display.

4,064,762
METHOD AND APPARATUS FOR BALANCING A ROTOR
Jan Christer Wikner, Finspong, Sweden, assignor to Stal-Laval Turbin AB, Finspong, Sweden
Filed Apr. 16, 1976, Ser. No. 677,651
Claims priority, application Sweden, Apr. 28, 1975, 7504871
Int. Cl.² B25B *19/00;* **G01M** *1/32*
U.S. Cl. 73—487 **2 Claims**

1. A method of balancing a rotor comprising the steps of:
removably attaching a balance weight to one end of an insertion rod, said insertion rod being slideably received in a sleeve, said sleeve bearing on said balance weight and extending beyond the other end of said insertion rod a predetermined distance;
inserting said balance weight into a recess in said rotor at a preselected location therein;
striking said sleeve against said balance weight to upset the material of said balance weight into said recess;

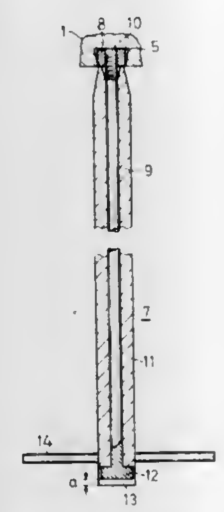

visually observing movement of said sleeve along said insertion rod until said sleeve has moved through said predetermined distance and the ends of said sleeve and said insertion rod are aligned to obtain a desired upsetting of said balance weight and then stopping said striking; and
removing said insertion rod from said balance weight, leaving said balance weight in said recess.

4,064,763
ACCELEROMETER FOR MEASURING PUMP ROD DISPLACEMENT
Krishnaswamy Srinivasan, Houston, Tex., assignor to Shell Oil Company, Houston, Tex.
Filed Nov. 1, 1976, Ser. No. 737,306
Int. Cl.² G01P *15/12*
U.S. Cl. 73—516 R **8 Claims**

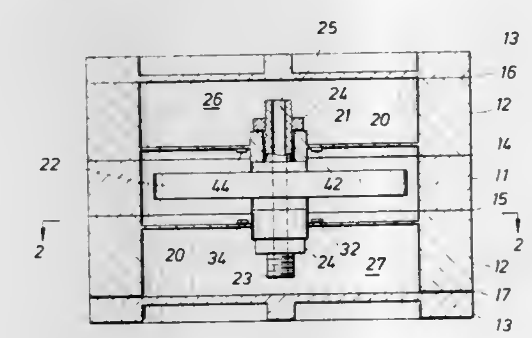

1. An accelerometer for measuring low amplitude, low frequency accelerations along one axis and discriminating against acceleration along axes at right angles to said one axis; said accelerometer comprising:
a closed cylindrical housing;
a pair of spaced circular diaphragms, said diaphragms being mounted in said housing in a spaced parallel relation to divide said housing into three enclosed spaces within said housing;
a weighted member, said member being disposed in the space between said diaphragms and fastened to both said diaphragms;
conduit means disposed to provide fluid communication between the other two spaces;
a plurality of strain gages, at least one of said strain gages being mounted on each of said diaphragms with their sensitive axis disposed in a radial direction; and
circuit means, said strain gages being coupled to said circuit means in a manner to cancel response along axes transverse to the axis of said cylindrical housing.

4,064,764
TRIP DEVICE FOR A ROTATING MACHINE
George P. Schanzenbach, Jr., Reading, and David M. Mizikar, Mount Pleasant, both of Pa., assignors to Carrier Corporation, Syracuse, N.Y.
Filed May 4, 1976, Ser. No. 683,135
Int. Cl.² F16P *7/02;* **F16C** *41/00*
U.S. Cl. 74—2 **9 Claims**

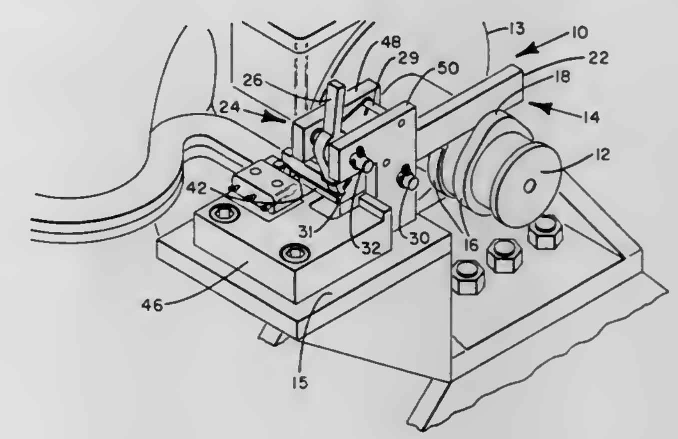

1. A trip device to discontinue operation of a machine upon the occurrence of an undesirable operating condition comprising:
means to sense the occurrence of said undesirable operating condition;
a first operating arm spaced from said sensing means during normal operation of said machine, said sensing means moving into contact with said arm upon the occurrence of said undesirable operating condition; and
trigger means to lock said operating arm in said normal operating position, said sensing means moving said arm relative to said trigger means upon the occurrence of said undesirable operating condition, said trigger means thereafter acting as a stop to maintain said operating arm in a position spaced from said sensing means.

4,064,765
FLYWHEEL ASSEMBLY RING GEAR GUARD
Edward D. McBride, Waukegan, Ill., assignor to Outboard Marine Corporation, Waukegan, Ill.
Filed Oct. 18, 1976, Ser. No. 733,036
Int. Cl.² F02N *11/10, 15/10*
U.S. Cl. 74—6 **24 Claims**

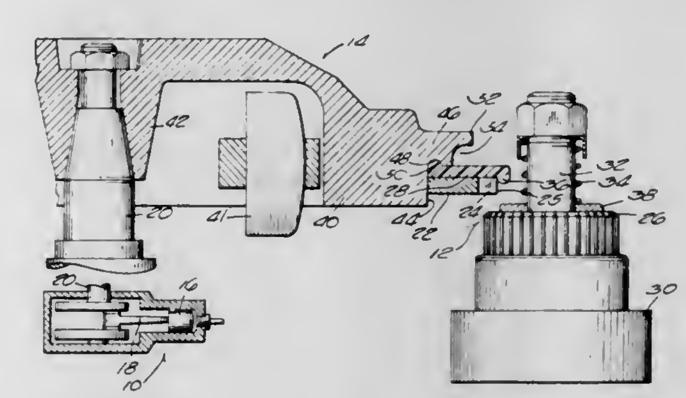

1. A flywheel assembly adapted for use with an engine, said flywheel assembly comprising a ring gear including teeth adapted for engagement with a starter pinion, and a flexible member extending adjacent said ring gear teeth to prevent access to said ring gear teeth by an engine operator.

4,064,766

MODULAR CONTROL LINKAGE ASSEMBLY FOR A HYDROSTATIC TRANSMISSION

James D. Rinaldo, Joliet, Ill., assignor to Caterpillar Tractor Co., Peoria, Ill.

Filed June 15, 1977, Ser. No. 806,804

Int. Cl.² G05G *11/00;* **F15B** *13/09*

U.S. Cl. 74—473 R **5 Claims**

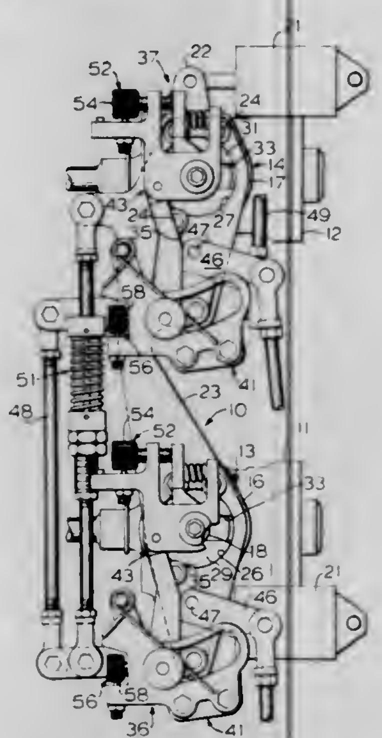

1. A modular control linkage assembly for a hydrostatic transmission having a pair of variable displacement overcenter hydraulic pumps and first and second rotary servo valves, each servo valve having a housing connected to the respective pump and a valve spool rotatably positioned within the housing for controlling the output displacement of the respective pump, comprising:

a mounting plate extending between and releasably connected to said housings of the first and second servo valves;

first means connected to the valve spool of the first servo valve for selectively rotating said first servo valve spool, said first means being mounted on said mounting plate adjacent said first servo valve spool;

second means connected to the valve spool of the second servo valve for selectively rotating said second servo valve spool, said second means being mounted on said mounting plate adjacent said second servo valve spool; and

third means interconnecting said first and second means for causing simultaneous rotation of said valve spools in response to a single input signal to one of the first and second means.

4,064,767

CONTROL LEVER ASSEMBLY

Richard F. Boersma, Springfield, Ill., assignor to Fiat-Allis Construction Machinery, Inc., Deerfield, Ill.

Filed Nov. 8, 1976, Ser. No. 740,134

Int. Cl.² G05G *1/04, 1/14*

U.S. Cl. 74—491 **10 Claims**

1. A control lever assembly adapted to be mounted on a panel for actuating a controlled function, comprising

a mounting bracket adapted to be mounted to one side of said panel over an opening therein,

a pivot pin fixed to said bracket and having its axis disposed in a plane parallel to the plane of said opening,

bearing means surrounding said pin and journalled for rotation thereon to rotate about said pivot pin axis,

a handle fixed to said bearing means for movement thereof and extending through said opening with a distal end portion being disposed on the opposite side of said panel,

a centrally-apertured, flexible seal member surrounding said handle and disposed between said bearing means and said bracket for sealing said assembly to said one side of said panel, and

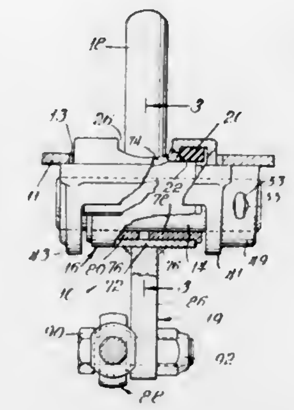

a control linkage extending from said bearing means on said one side of said panel to the controlled function for movement with said handle for actuating said controlled function.

4,064,768

DETENT MECHANISM WITH ARC TRAVEL LIMITER

Spencer E. Smith, Western Springs, and Donald C. Marek, Hickory Hills, both of Ill., assignors to International Harvester Company, Chicago, Ill.

Filed Nov. 29, 1976, Ser. No. 745,886

Int. Cl.² G05G *5/06;* **B60K** *20/06, 20/08*

U.S. Cl. 74—528 **7 Claims**

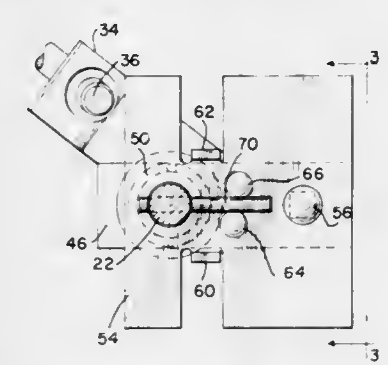

1. A detent mechanism comprising:

a fixed detent platform having an aperture therethrough, first and second upwardly extending tabs and first and second protuberances formed in said detent platform on arcuate paths between said tabs;

a rotatable control rod passing through said aperture of said detent platform, said control rod having a transverse appendage extending outward from said control rod in contact with the top surface of said detent platform between said first and second upwardly extending tabs;

a biasing means carried on said control rod to urge said transverse appendage into contact with the detent platform whereby said first and said second tabs absolutely limit the arcuate travel of said control rod through contact with said transverse appendage and said first and second protuberances impede the arcuate travel of said control rod through spring loaded contact with said transverse appendage.

4,064,769

CONTROL PEDAL-MECHANICAL SPEED WITH ELECTRICAL DIRECTION CONTROL

John K. Amdall, Peoria, and Gerald P. Simmons, Washington, both of Ill., assignors to Caterpillar Tractor Co., Peoria, Ill.

Filed Nov. 24, 1975, Ser. No. 634,949

Int. Cl.² G05G *13/00*

U.S. Cl. 74—878 **6 Claims**

1. A control linkage for combined simultaneous control of an engine throttle and a transmission control valve ratio selector element from a single pedal, comprising:

a single foot pedal mounted for pivotal movement a about a first axis from a zero position in a first direction through a control range of selectively variable throttle positions and transmission drive ratios, said pedal having a surface for receiving an operator's foot which surface is fixed against pivoting movement about any axis other than said first axis;

throttle linkage means mechanically linking said engine throttle to said single pedal for causing proportionate movement of said throttle through said control range as said pedal is pivoted in said first direction; and

transmission ratio control linkage means for selectively linking said transmission control valve ratio selector element to said single foot pedal for proportional movement

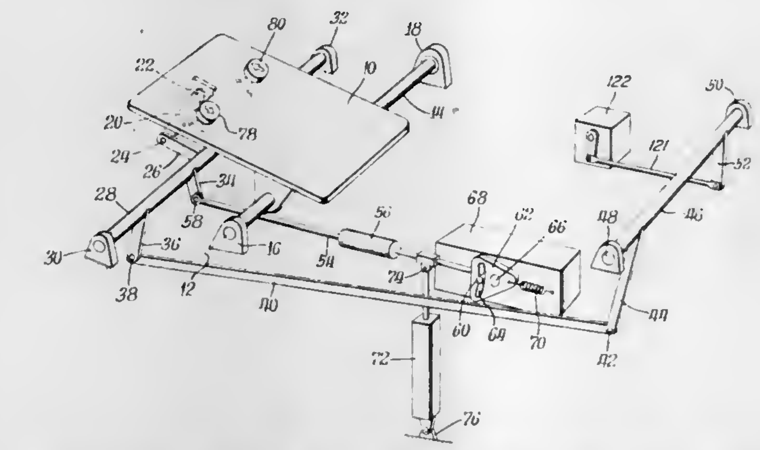

therewith through said control range, said ratio control linkage means including shifting means for shifting said ratio control linkage means to a first position, in response to placement of said operator's foot at a first location on said pedal surface, for proportional movement of said control valve ratio selector element in a forward direction upon movement of said foot pedal in said first direction and for shifting said linkage to a second position, in response to placement of said operator's foot at a second different location on said pedal surface, for proportional movement of said control valve ratio selector element in a reversed direction upon movement of said foot pedal in said first direction, and for maintaining said control valve ratio selector element stationary upon pivoting of said pedal in said forward direction in response to placement of said operator's foot at a third location on said pedal surface.

4,064,770

MACHINE FOR SHARPENING BAND SAW TEETH

Vladimir Viktorovich Idel, ulitsa Gertseana, 3, kv. 37, Zavolzhie Gorkovskoi oblasti, U.S.S.R.

Continuation of Ser. No. 556,539, March 7, 1975, abandoned. This application June 21, 1976, Ser. No. 698,134

Claims priority, application U.S.S.R., June 24, 1974, 2032128; June 24, 1974, 2032129

Int. Cl.² B23D *63/12*

U.S. Cl. 76—37 **1 Claim**

1. A machine for sharpening band saw teeth comprising: a base; a sharpening mechanism with a grinding wheel mounted on said base; means for feeding a saw to the grinding wheel for sharpening edges of the adjacent saw teeth mounted on said base; means for pitch feed of the saw relative to the grinding wheel mounted on said means for feeding the saw to the grinding wheel; said means for feeding the saw to the grinding wheel being connected to said means for pitch feed of the saw; a resilient clamping means for supporting the saw in a floating position, said resilient clamping means being mounted on said means for feeding the saw to the grinding wheel; at least two support members mounted on said resilient clamping means for successively engaging the addendum of each tooth of the saw; one of said support members being mounted before the grinding wheel in the direction of the pitch feed of the saw; the other support member being mounted behind the grinding wheel in the direction of the pitch feed of the saw; means for braking the saw including a pressure member in intermittent contact with the side surface of the saw, said pressure member being mounted adjacent to said one support member mounted

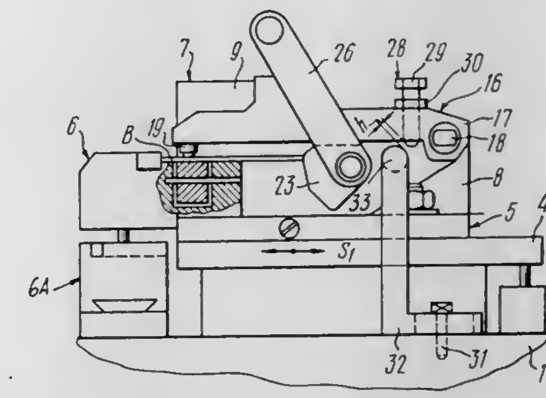

before the grinding wheel in the direction of the pitch feed of the saw; a stop adjustably mounted on said means for braking the saw; a cam adjustably mounted on said base; and said stop cooperating with said cam during the sharpening of edges of the adjacent saw teeth, whereby the saw is released from braking.

4,064,771

AUTOMATIC TORQUE CONTROLLER FOR AN IMPACT WRENCH

Adrian H. Krieg, 2627 Dunning Drive, Yorktown, N.Y. 10598

Filed Mar. 10, 1977, Ser. No. 776,280

Int. Cl.² B25B *19/00*

U.S. Cl. 81—52.3 **10 Claims**

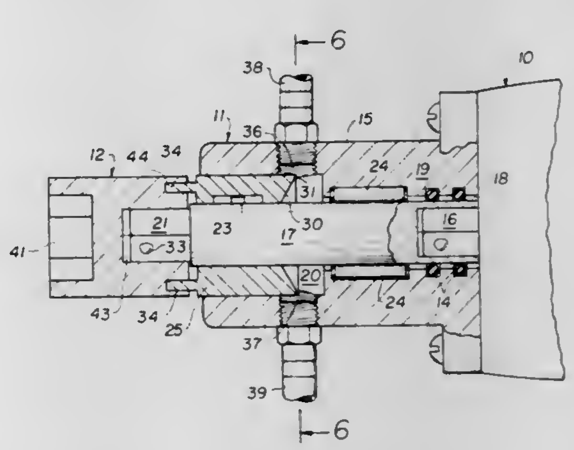

1. A torque controller for use in pneumatic impact wrenches comprising a main housing having a first end wall and a second end wall, an inlet opening for compressed air, and an outlet opening for the exhaust of the compressed air; a shaft rotatably mounted between said first and second end walls having an opening formed in its end near said first end wall for receiving a driving member of an impact wrench, and a driving projection formed near said second end wall for driving engagement with a socket tool; and a sliding member mounted for slidable movement relative to said shaft, said sliding member comprising a base portion mounted around said shaft, said sliding member having groove engaging means mounted at its end near said second end wall for engagement with a groove in a socket tool, said sliding member being slidable to and away from said first end wall and forming therebetween a chamber, said chamber receiving compressed air from said inlet opening and exhausting compressed air by said outlet opening.

4,064,772
TUBING WRENCH WITH AIR POWERED RETURN
H. Edward Boyd, Euclid, Ohio, and Thomas M. Freiburger, San Rafael, Calif., assignors to Cooper Industries, Inc., Houston, Tex.
Filed July 6, 1976, Ser. No. 703,065
Int. Cl.² B25B *17/00*
U.S. Cl. 81—57.13 **7 Claims**

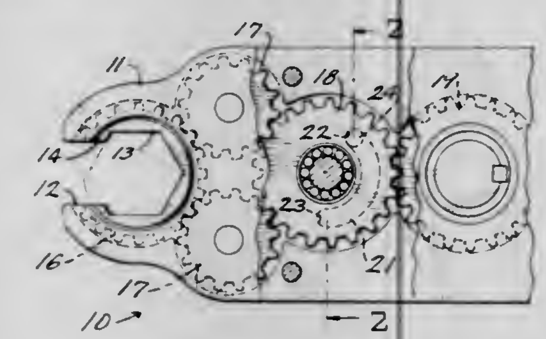

1. In a power driven tubing wrench having an air motor, a throttle valve for selectively admitting and shutting off a flow of pressurized air to the air motor, a spool valve for controlling the direction of rotation of the air motor by selectively and alternately linking the inlet and exhaust sides of the air motor with pressurized air and the exterior of the tool, a housing extending forward from the air motor and including a forward end with a circular opening therethrough and a radial slot therein, a generally annular, radially slotted fastener driving socket member rotatably positioned within the forward end of the housing, a driving connection between the motor and the socket member, and means for stopping the reverse rotation of the socket member at a position wherein the radial slots of the forward housing end and of the socket member are in alignment, the improvement, comprising a unitary spool and throttle valve stem axially movable from a first position opening to admit air flow to the inlet side of said motor, to a second position to shut off the inlet side of said motor and admit air flow to the exhaust side of said motor and thence to a third position of no air flow.

4,064,773
SOUND DEADENING MEANS FOR USE ON A BAR FEEDING MACHINE
Fred B. Apel, 22560 Kenwyck, Southfield, Mich. 48076, and Jerome B. Olson, 15341 Oak Park Blvd., Oak Park, Mich. 48237
Filed Aug. 9, 1976, Ser. No. 712,686
Int. Cl.² B23B *13/00*
U.S. Cl. 82—38 A **8 Claims**

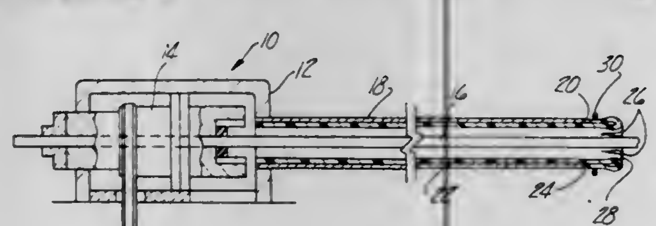

1. In combination with a machine of the type which operates upon a bar from which a work article is formed and including a feed tube through which the bar is fed, said tube having a first end positioned to feed the bar to said machine and a second, opposite end exposed for axially receiving the bar, sound deadening means comprising a non-metallic tubular cylindrical member adapted to fit within said tube and having an inside diameter larger than the diameter of said bar and at least one end of said member extending outwardly from said second end of said tube, a portion of said outwardly extending end of said sound deadening member being folded back upon itself to form an enlarged diameter portion having a circumferential edge which abuts said second end of said tube to prevent said sound deadening means from being moved axially inwardly into said tube with said bar.

4,064,774
WORK HANDLING APPARATUS FOR CENTER DRIVE LATHE
William Harvard Maddock, Weston, Canada, assignor to Standard Modern Tool Company Limited, Toronto, Canada
Filed Dec. 8, 1976, Ser. No. 748,548
Int. Cl.² B23B *15/00*
U.S. Cl. 82—45 **6 Claims**

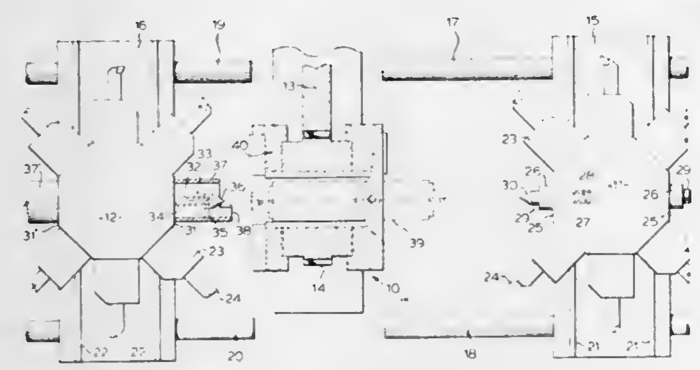

1. In a work handling apparatus for a center drive lathe having a center chuck defining a horizontal work axis, and a right hand and a left hand turret, said turrets being reciprocable longitudinally and transversely with respect to said axis, each turret providing a plurality of turret faces and being indexed to move said turret faces sequentially to an operative position, the improvement comprising:
first and second work supporting centers mounted respectively on said right hand and left hand turrets, each work supporting center having a tapered nose and an elongated body portion extending therefrom,
at least one face of each turret providing mounting means engaging the body portion of the respective work supporting center for locating the work supporting center coaxially with the chuck in the operative position of said one face,
said mounting means including, respectively, first and second spring biasing means engaging said first and second work supporting centers for biasing said centers axially inwardly towards the chuck,
the second spring biasing means being weaker than the first spring biasing means, and
a work locating jig mounted on said left hand turret and extending axially from said one face thereof when said one face is in the operative position,
the jig providing an abutment shoulder engageable with a workpiece carried between said centers for locating the workpiece axially with respect to the chuck.

4,064,775
METHOD AND APPARATUS FOR REPAIRING CONVEYOR BELTS
Robert L. Larson, Des Plaines, Ill., assignor to Regis Belt Maintenance Corporation, Chicago, Ill.
Filed Jan. 19, 1976, Ser. No. 650,497
Int. Cl.² B26D *3/28*
U.S. Cl. 83—4 **2 Claims**

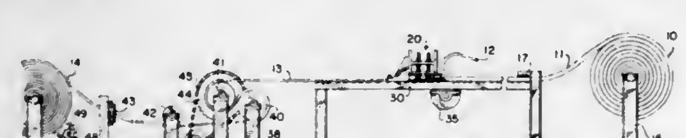

1. A method of refinishing a linear worn conveyor belt by splitting the worn conveyor into a worn portion and a structural portion, and securing a new surface on said structural portion; said method comprising the steps of:

mounting a conveyor belt between a feed roll and a take-up roll in a position for continuous feeding of said belt at a desired height and attitude, said belt having a worn portion and a structural portion, positioning an adjustable knife edge in the path of the belt between said rolls, said knife edge being fixed relative to the travel of said belt;
making an initial cut across the width of a leading edge of the belt;
feeding said leading edge of the belt past a first stationary positioning means, said first positioning means orienting said belt in a desired attitude;
drawing said leading edge of said belt over a second positioning means spaced from said first positioning means, said second positioning means adjustable to present said leading edge at a desired height to said knife edge;
allowing the upper portion of said belt to move freely between said first positioning means and said knife edge;
adjusting said second positioning means to present said belt at the desired height and angle to said knife edge;
adjusting said knife edge to position said knife edge at a desired height relative to said positioning means;
tensioning said belt between said positioning means;
drawing said tensioned belt past said knife edge at a continuous and uniform rate onto said take-up roll, thereby severing a worn portion of said belt from said reusable structural portion, whereby a new upper surface may be secured on said structural belt portion to obtain a resurfaced conveyor belt having a highly uniform thickness and a new surface thereon.

4,064,776
APPARATUS FOR MAKING TEAR RESISTANT SEPARABLE END-CONNECTED BAGS
Charles R. Walitalo, Matteson, and Alvin E. Ericson, Chicago, both of Ill., assignors to Union Carbide Corporation, New York, N.Y.
Division of Ser. No. 527,430, Nov. 26, 1974, abandoned. This application June 15, 1976, Ser. No. 696,297
Int. Cl.² B26D *7/10*
U.S. Cl. 83—171 **2 Claims**

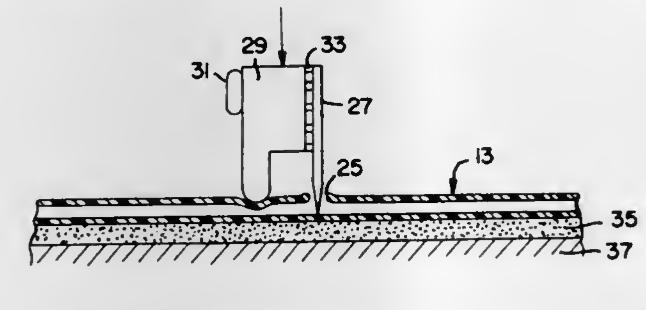

1. Apparatus for forming discontinuous annealed edged perforations separated by tabs in flexible plastic film sheet material comprising, in combination, a serrated edged cutting blade having recesses disposed at spaced intervals extending into the blade from its cutting edge to beyond its cutting edge, said recesses being disposed at the apexes of crevices in the serrated edge of the blade, and means to heat the blade to a preselected temperature lower than the melting temperature of the plastic film sheet material in process, at which temperature the material will anneal.

4,064,777
CIRCUIT FOR PREFERENTIALLY SELECTING HIGHEST AND LOWEST TONES
Keiji Akamatsu, Osaka, Japan, assignor to Roland Corporation, Japan
Filed Aug. 26, 1976, Ser. No. 718,195
Claims priority, application Japan, Sept. 8, 1975, 50-109318
Int. Cl.² G10H *1/00, 5/06*
U.S. Cl. 84—1.03 **4 Claims**

1. In an electronic keyboard musical instrument, a circuit for preferentially selecting the highest and the lowest tones from among the tones in chords produced by keys on the keyboard which have been struck, said circuit comprising:
a set of resistors having equal value connected in series, the number of resistors in said set being one more than the number of tones from which the highest and lowest tones are to be selected;
an end resistor connected between each end of said set of resistors and a reference voltage level;
a plurality of transistors each having the emitter thereof connected to said set of resistors at a junction between two resistors of said set which corresponds to the transistor and having the collector thereof adapted to receive a corresponding tone signal, the number of transistors cor-

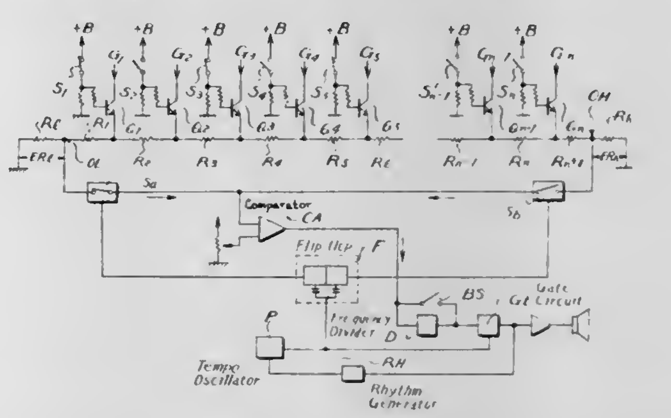

responding to the number of tones from which the highest and lowest tones are to be selected;
a plurality of keyswitches, one connected to the base of each transistor and to a bias source, for connecting the base of the transistor to said bias source when the corresponding tone is played;
two switch means, one connected between each end of said set of resistors and the corresponding end resistor;
means connected to said switch means for alternately opening and closing said switch means in synchronism; and
shaping and amplifying means coupled to said switch means for alternately receiving signals from opposite ends of said set of resistors through said switch means and for producing an output of uniform amplitude.

4,064,778
FREQUENCY-DEVIATION METHOD AND APPARATUS
Yasuji Uchiyama, Hamakita, Japan, assignor to Nippon Gakki Seizo Kabushiki Kaisha, Japan
Division of Ser. No. 163,034, July 15, 1971, Pat. No. 3,973,462, which is a division of Ser. No. 81,011, Oct. 15, 1970, abandoned. This application Apr. 7, 1976, Ser. No. 674,317
Claims priority, application Japan, Oct. 15, 1969, 44-8212; Oct. 15, 1969, 44-8213; Oct. 15, 1969, 44-8214; Oct. 15, 1969, 44-8215; Oct. 16, 1969, 44-98574; Oct. 16, 1969, 44-98575; Oct. 17, 1969, 44-98804
The portion of the term of this patent subsequent to Aug. 10, 1993, has been disclaimed.
Int. Cl.² G10H *1/02*
U.S. Cl. 84—1.25 **3 Claims**

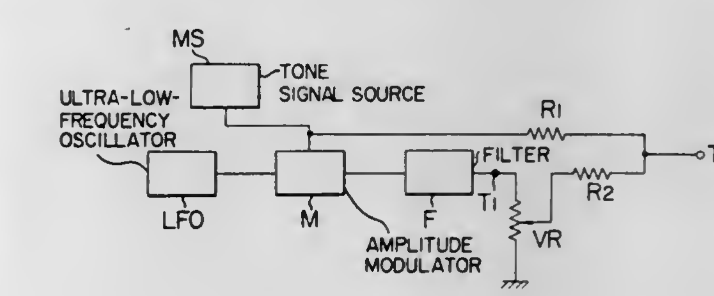

1. A method for electronically generating an audible sound exhibiting a tremolo effect, said method comprising the steps of:

providing an electrical musical tone signal of a given frequency;
providing an electrical carrier signal of a frequency lower than said given frequency;
generating an amplitude modulated electrical signal by electronically varying the amplitude of the carrier signal in accordance with the amplitude of the tone signal of said given frequency;
electronically removing the carrier signal frequency from the modulated signal;
electronically inserting the musical tone signal of said given frequency into the modulated signal to produce an electrical output signal consisting of frequency components of the given frequency, the sum and the difference frequencies of the given and carrier frequencies; and
thereafter converting the electrical output signal into an audible sound.

4,064,779
FRET
Phillip J. Petillo, 1206 Herbert Ave., Ocean, N.J. 07712
Filed June 22, 1976, Ser. No. 698,318
Int. Cl.^{2} G10D *3/06*
U.S. Cl. 84—314 **5 Claims**

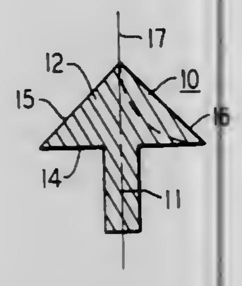

1. A fret adapted for insertion in the neck of an instrument having one or more strings disposed a predetermined height above the surface of said neck comprising:
an elongated stem adapted to engage said neck for mounting purposes, said stem having a central axis passing longitudinally through its long axis, and
a cap for engaging a string when said string is deflected toward said neck by a player's finger, said cap having a base centrally attached to one end of said stem and two sides converging above said base (so as to intersect) and intersecting at said central axis and at least one side lying in a spacial segment defined on one border by said base and on the other border by a straight line diverging towards said central axis from a point of intersection with the end of said base.

4,064,780
STRINGED INSTRUMENTS
Andrew Bond, 38 Courthill Road, Parkstone, Poole, Dorset, England
Filed Aug. 18, 1975, Ser. No. 605,502
Claims priority, application United Kingdom, Nov. 26, 1974, 51247/74; May 29, 1975, 23464/75
Int. Cl.^{2} G10D *3/06, 3/04*
U.S. Cl. 84—314 **16 Claims**

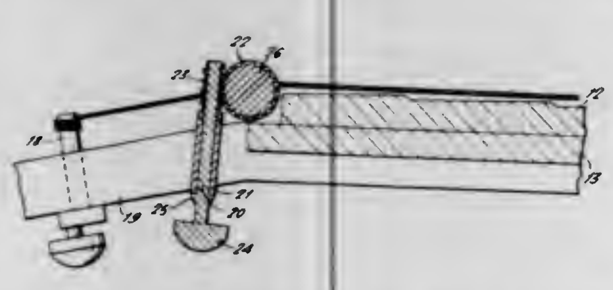

1. A fretboard adapted to be fitted to the neck of a stringed instrument, the fretboard comprising a unitary, elongate body having first and second longitudinally spaced ends to be arranged adjacent the body and head ends, respectively, of a stringed instrument, and a plurality of integrally formed frets in the normal fret positions, said frets comprising transversely extending crests of a plurality of triangular shaped ridges arranged in succession along a surface of said body from said first end to said second end, each said ridge comprising a relatively short side inclined substantially at right angles to the longitudinal axis of said body and a relatively long, substantially planar side sloping from the top of said short side to the base of the short side of the next following ridge in the direction of said second end, the top of each said short side where it meets its associated relatively long side, being rounded with the center of curvature located on an imaginary line extending substantially at right angles to the longitudinal axis of said body and passing through the crest of the associated ridge, at least the crest of each ridge having a hard, wear resistant surface.

4,064,781
GUITAR PICK
Henry J. Fals, Vacaville, Calif., assignor to The Raymond Lee Organization, Inc., New York, N.Y., a part interest
Filed Nov. 10, 1976, Ser. No. 740,593
Int. Cl.^{2} G10D *3/16, 5/00*
U.S. Cl. 84—322 **3 Claims**

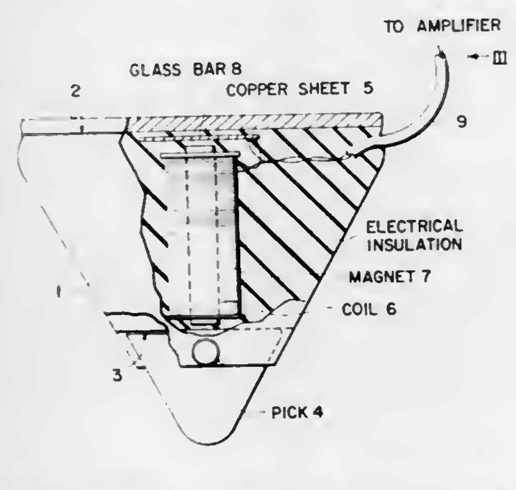

1. A guitar pick for steel string guitars, said guitar pick comprising
a generally triangular base of electrically insulative material having a base edge and a vertex area opposite the base edge;
a guitar pick mounted in the base at the vertex area thereof and extending therefrom to form a substantially triangular configuration;
a sheet of electrically conductive material embedded in the base in spaced parallel proximity with the base edge thereof;
microphone means embedded in the base and extending between the pick and the sheet of electrically conductive material and in close proximity with each; and
electrically conductive means electrically connected to the microphone means and the sheet in the base and extending out of the base for connection to an amplifier.

4,064,782
ELECTRONIC MUSIC DISPLAY DEVICE
Daniel Laflamme, 157 Desmarchais Boulevard, Verdun, Quebec, Canada
Filed May 6, 1976, Ser. No. 683,860
Int. Cl.^{2} G09B *15/02;* G10C *3/12*
U.S. Cl. 84—477 R **10 Claims**

1. An electronic digital display device for identifying musical notes which comprises:
1. a series of manually operable on-off key selector switches, mounted on a portable frame, one key selector switch associated with each desired key and so identified, each said key selector switch being of a type which does not permit simultaneous operation of two or more key selector switches in the "on" position;

2. a series of manually operable on-off note selector switches mounted on the frame, one note selector switch being associated with each desired note and so identified, each said note selector switch being simultaneously operable with any one or more other said note selector switches in the "on" position;
3. interval indicator means mounted on the frame and visually associated with said note and key selector switches;
4. a first circuit network portion comprising a plurality of circuit branches, one branch associated with each key selector switch, each of said circuit branches extending to

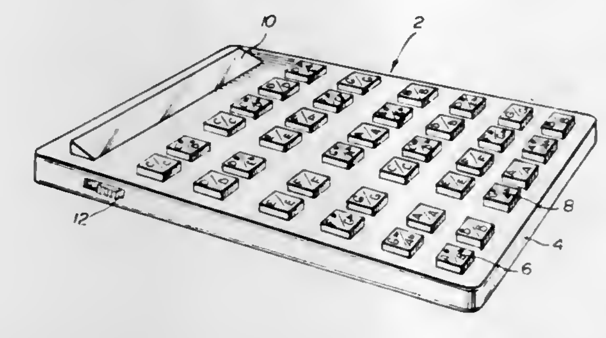

each of said note selector switches and being exclusively actuated by its associated key selector switch;
5. a second circuit network portion comprising a plurality of circuit branches, each corresponding to a branch of said first circuit portion at each of said note selector switches and each branch of said second circuit portion extending from each of said note selector switches to said interval indicator means, said first and second portions of said circuit network arranged so that a characteristic visual response is obtained from the interval indicator means for each note in a given key.

4,064,783
PRESSURE-BALANCED UNDERWATER STRUCTURAL RELEASE SYSTEM
John O. Ess, Alexandria, Va., assignor to The United States of America as represented by the Secretary of the Navy, Washington, D.C.
Filed Jan. 27, 1977, Ser. No. 763,209
Int. Cl.^{2} F16B *37/00*
U.S. Cl. 85—33 **8 Claims**

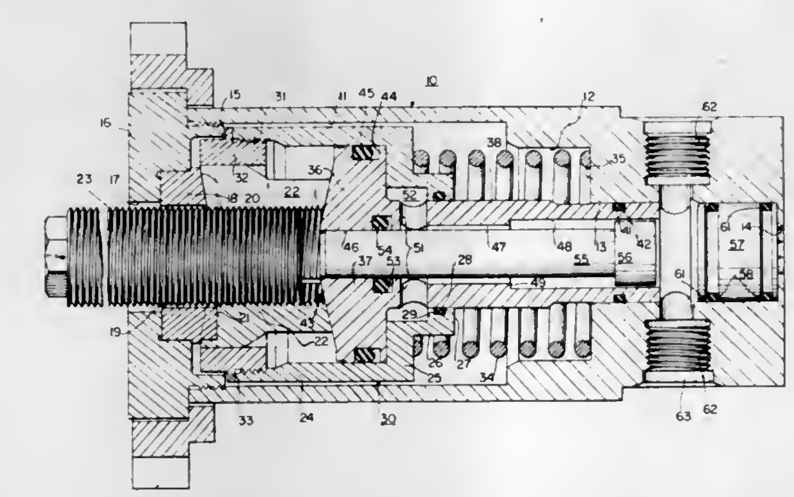

1. A pressure-balanced separation-nut device for releasably engaging a threaded element coaxial with the linear axis of the device which comprises:
a housing forming an internal cavity,
said internal cavity including first, second, third and fourth sections each of lesser diameter in successive order progressing toward the forward end of said housing, said fourth section forming an open end in said housing;
a base secured to the back end of said first section of said housing;
said base including an axial aperture therein;
a seat member secured to said base member coaxial therewith, extending into said cavity, and having an aperture with substantially the same diameter as the aperture in said base member;
a segmented threaded nut within said first section of said cavity juxtaposed said seat member and coaxial with said cavity in said housing;
a piston cylinder encircling said segmented nut;
said piston cylinder including an axially extending cylindrical portion and first and second transverse annular end walls extending radially inward, the second wall being forward of the first wall;
a piston ring secured to one end of said axially extending cylindrical portion of said piston cylinder between the inner surface of said piston cylinder and the outer surface of said segmented nut to form a locking means for said nut segments;
said piston ring locking said segmented nut in place to receive said threaded element;
a buffer piston including a piston head and a piston rod extending forward from said piston head with an axial aperture extending through said buffer piston and having a transverse aperture across its diameter near said piston head and opposite said first transverse annular wall of said piston cylinder;
said piston head positioned within said piston cylinder between said nut segments and said first transverse annular wall of said piston cylinder, said piston head having an outside diameter substantially equal to the inside diameter of said piston cylinder with a face contoured to that of said segmented nut adjacent thereto;
said piston rod extending through said second transverse annular wall of said piston cylinder and secured within said third cavity section of said housing coaxial therewith;
a space bounded by said piston rod, said piston cylinder, said second transverse wall of said piston cylinder and said buffer-piston head, said transverse aperture connecting with said space;
an ejecting rod coaxially positioned within said aperture in said buffer piston for relative movement therein for ejection of said threaded element, said ejecting rod having a head at the end thereof remote from said buffer-piston head;
an end-closure means within said fourth cavity section of said housing and positioned between said ejection rod and said open end in said housing, said end-closure means comprising a piston exposed to the surrounding medium, means for permitting axial movement of said end-closure means within said housing prior to and during release of the threaded element;
sealing means to prevent leakage between said buffer piston and said piston cylinder, between said piston head and said ejection rod, between said piston rod and said housing, and between said end-closure means and said housing; at least one opening in said housing for reception of a fluid source, said opening being located between said end-closure means and said piston rod;
a fluid confined within the space between said buffer-piston head and said first radially extending wall of said piston cylinder, inside said aperture in said buffer-piston rod, between said ejection rod and said buffer-piston cylinder, and between said ejection rod head, said end-closure means, and a fluidpressure generating means,
said fluid-pressure generating means for increasing fluid pressure within said housing to force said piston cylinder and said locking piston ring from their locking position to an unlocked position; and
whereby pressure of the surrounding medium is applied to said end-closure piston which applies pressure to said confined fluid to balance pressures on said piston cylinder created by free flooding of said housing.

4,064,784
DRILL TIP AND THREADED FASTENER
Robert B. Adler, 6855 Cornell Road, Cincinnati, Ohio 45242
Continuation-in-part of Ser. No. 573,474, May 1, 1975, abandoned. This application Dec. 19, 1975, Ser. No. 642,664
Int. Cl.^{2} F16B *25/00*
U.S. Cl. 85—41 **16 Claims**

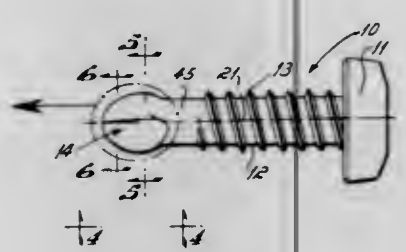

1. A drill tip mounted on a shank comprising,
a pair of cutting elements,
each being one-half of a concave-convex spade-like element,
said elements being oppositely facing and integrally joined at the axis of said shank, the juncture of said elements forming a web in said tip,
each of said elements presenting an outboard curvilinear cutting edge which smoothly merges into said an arcuate pilot end, said curvilinear cutting edges and said arcuate pilot end forming a continuous curved cutting edge extending from one side of the shank to the diametrically opposite side thereof, said continuous cutting edge lying in a single plane generally parallel to the axis of said shank.

4,064,785
THREADED CONNECTIONS
Peter Charles Graham, 9 Jasmyn Street, and Joseph Theo Renison, 9 Begonia Street, both of Welkom, South Africa
Filed Dec. 5, 1975, Ser. No. 638,088
Claims priority, application South Africa, Dec. 9, 1975, 75/7803
Int. Cl.^{2} F16B *31/02*
U.S. Cl. 85—62 **3 Claims**

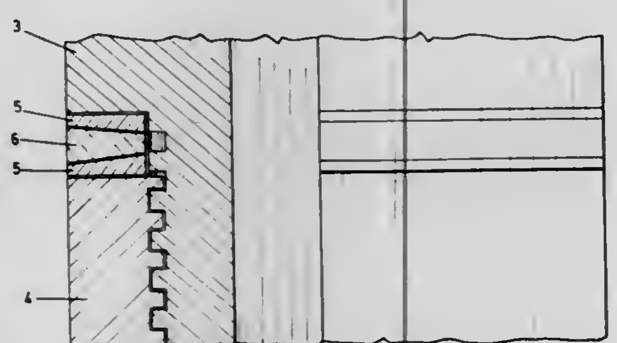

1. A break-out assembly in combination with a connection between interengaged screw-threaded male and female elements enabling the elements to be separated after being threadably engaged under stress, the assembly comprising a continuous annular washer of ductile material capable of developing hoop stress, said washer decreasing in thickness radially inwardly and having an internal diameter which is free fit around the male threaded element, and a pair of separate continuous annuli of relatively harder material than the washer, the annuli being complementally shaped to the washer and sandwiching the washer between them to form a right cylindrical ring which, when axial pressure is applied between its ends, places the washer under hoop stress, said annuli and washer having inner annular surfaces directly facing said male threaded element and forming clear annular gaps therewith, said gaps being devoid of any structure between said inner annular surfaces and said male threaded element, said inner annular surface of said washer being interposed between the annuli and holding the same apart in axially spaced relation such that when the annuli are axially stressed and the washer is under hoop stress, breakage of the washer unstresses the connection allowing the threaded elements to be separated.

4,064,786
METHOD AND DEVICE FOR AUTOMATIC AMMUNITION HANDLING
Tore Elwin, Karlskoga, Sweden, assignor to AB Bofors, Bofors, Sweden
Filed Feb. 3, 1976, Ser. No. 654,833
Claims priority, application Sweden, Feb. 19, 1975, 7501823
Int. Cl.^{2} F41F *9/04*
U.S. Cl. 89—33 B **3 Claims**

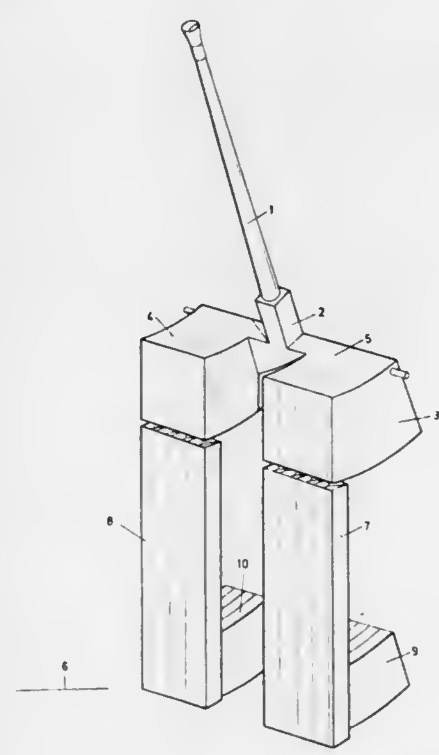

1. Apparatus for handling rounds of ammunition for a gun, said gun being mounted for movement about a horizontal elevation axis, to load said gun in synchronism with the rate of fire of said gun, comprising:
at least one ammunition magazine located on and movable with said gun about said axis, said magazine having a plurality of side-by-side, essentially vertically extending compartments spaced laterally from said gun said compartments having upper and lower portions, said upper portion of each said compartment being located to permit horizontal feed of rounds first from said upper portion of the compartment located closest to said gun into said gun and then sequentially from said upper portions of the remaining compartments, said lower portions of said compartments being adapted to simultaneously receive a corresponding plurality of rounds during loading;
at least one ammunition compartment located below and fixed relative to said gun;
a plurality of side-by-side hoist means located in said at least one ammunition compartment for lifting a plurality of ammunition rounds with the axis of said rounds substantially parallel to the direction of movement from said at least one ammunition compartment and simultaneously depositing them in said lower portions of a corresponding plurality of said side-by-side compartments; and
means for rotating said gun about said horizontal elevation axis to a loading position in which said lower portions of said plurality of side-by-side compartments are oriented for simultaneously receiving said plurality of ammunition rounds direct from said plurality of side-by-side hoist means.

4,064,787
MAGAZINE FOR A MOBILE FIREARM
John Folke Eklund, and Sven-Hakan Svensson, both of Karlskoga, Sweden, assignors to AB Bofors, Bofors, Sweden
Filed Sept. 10, 1976, Ser. No. 722,256
Claims priority, application Sweden, Sept. 12, 1975, 7510204
Int. Cl.^{2} F41H *7/06*
U.S. Cl. 89—34 **7 Claims**

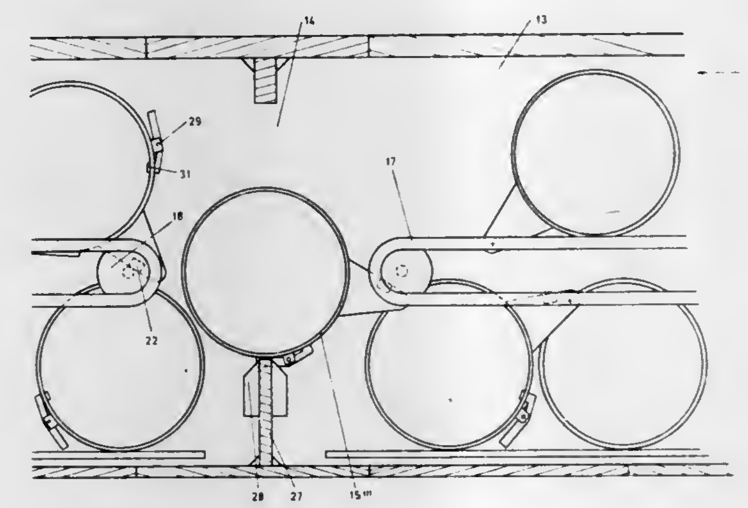

1. A magazine for delivering rounds to a feed-out position, comprising:
at least one endless chain having upper and lower courses, said chain being mounted for rotation with said upper course moving toward said feed-out position;
a plurality of tubular containers mounted on said at least one endless chain for movement therewith, each container being pivotably mounted by means of a respective fastening lug which extends laterally of the container in the direction of movement of said at least one endless chain and is pivotably attached to said at least one endless chain;
a stop located at said feed-out position and adapted to contact and support each sucessive one of said plurality of containers as each container pivots on its fastening lug away from said at least one endless chain and drops into said feed-out position; and
at least one blocking member mounted on each of said plurality of containers for preventing movement of rounds in said containers until said feed-out station is reached, each blocking member being positioned on its container for contact with and release by said stop when said container drops into said feed-out position.

4,064,788
CUSHIONING MEANS FOR HYDRAULIC CYLINDER
Beldon Lee Rich, Northbrook, Ill., and Zdenek J. Lansky, Solon, Ohio, assignors to Parker-Hannifin Corporation, Cleveland, Ohio
Filed July 29, 1976, Ser. No. 709,762
Int. Cl.^{2} F15B *15/22*
U.S. Cl. 91—395 **3 Claims**

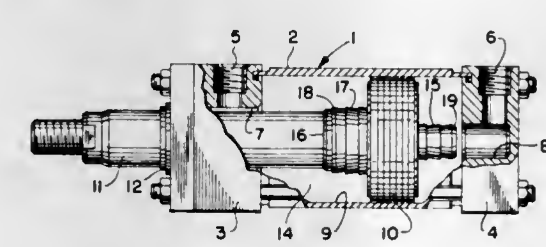

1. Cushioning means for cushioning the terminal portion of the stroke of a piston in a hydraulic cylinder wherein said cylinder has a bore in one end through which fluid is displaced from said cylinder during movement of the piston therein; said cushioning means comprising a member on said piston extending axially therefrom to enter said bore to throttle the flow of fluid through said bore during the terminal portion of said stroke; said member having first and second coaxial steps which define with said bore successive first and second annular orifices of stepwise progressively decreasing cross-section area as said piston moves in the terminal portion of said stroke; said steps being tapered to smaller diameter toward said piston to provide a sudden radial enlargement as said second step enters said bore and to provide for gradual radial contraction as said first and second steps enter said bore.

4,064,789
CONTROL VALVE FOR PRESSURE-MEDIUM SERVO-MOTOR
Jaromir Bordovsky, Leutenbach, and Klaus Katz, Stuttgart, both of Germany, assignors to Daimler-Benz Aktiengesellschaft, Germany
Filed Feb. 6, 1975, Ser. No. 547,569
Claims priority, application Germany, Feb. 6, 1974, 2405561
Int. Cl.^{2} F15B *15/17, 13/14*
U.S. Cl. 91—417 R **47 Claims**

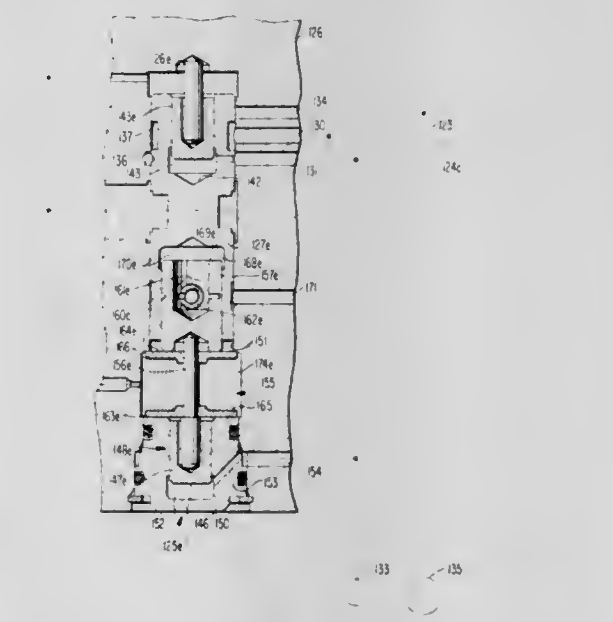

1. A control valve for a pressure medium operated servomotor of a servo-steering mechanism of the type having working pressure chamber means at respective oppositely directed working surfaces of relatively movable piston-cylinder means; said control valve comprising:
valve housing means,
valve adjusting means movably disposed in said valve housing means for controlling fluid pressure supply to said working pressure chamber means, said valve adjusting means being disposed to be acted upon by load dependent reaction pressure of said working chamber means in a direction opposite the direction of movement of said valve adjusting means from a neutral position,
double action reaction piston means, said reaction piston means having two oppositely acting reaction relief pressure surface means,
prestressed reaction spring means supporting said reaction piston means in both respective opposite axial directions with respect to said valve housing means,
and reaction piston connecting means connecting said reaction piston means with limited movement with said valve adjusting means while enabling a limited free relative adjusting path between said valve adjusting means and said reaction piston means, wherein said reaction relief pressure surface means is acted on by said reaction pressure forcing said reaction piston means in a direction reducing the effect of said reaction pressure on said valve adjusting means, whereby increase of said reaction pressure above a predetermined value results in movement of said reaction piston means against said reaction spring means to engage said connecting means and apply forces

to said valve adjusting means in the direction of movement of said valve adjusting means.

4,064,790
DUAL RADIAL PISTON PUMP OR MOTOR
Willard Q. Haak, Peoria, and Guy C. Carlson, Jr., both of East Peoria, Ill., assignors to Caterpillar Tractor Co., Peoria, Ill.
Filed Oct. 14, 1975, Ser. No. 621,929
Int. Cl.² F01B *13/04*
U.S. Cl. 91—492 **10 Claims**

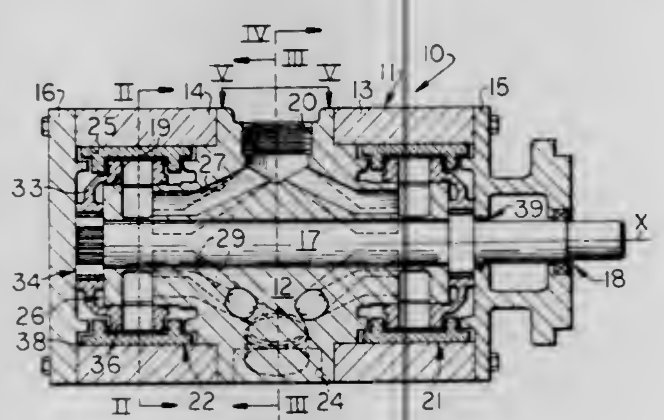

1. A dual radial piston apparatus comprising
a housing,
a single shaft mounted in said housing for rotation about a longitudinal axis thereof,
inlet means defined in said housing for communicating fluid therein,
outlet means defined in said housing for communicating fluid therefrom, and
a pair of longitudinally spaced pump means each mounted in a cylindrical chamber defined in said housing, each of said pump means comprising
pintle valve means mounted in said housing and communicating with said inlet means via first passage means and with said outlet means via second passage means,
a cup-shaped rotor operatively connected to said shaft at a spline connection for rotation therewith, whereby the rotor of each of said pump means is connected to said single shaft, and rotatably mounted on said pintle valve means in eccentric relationship relative to said chamber for communicating fluid from said first passage means to said second passage means upon rotation of said rotor,
a plurality of circumferentially spaced and hollow piston means secured on said rotor to extend radially outwardly therefrom and
a cylinder means reciprocally mounted on the end of each of said piston means and disposed in sliding bearing contact internally of said chamber for pumping fluid through said second passage means and to said outlet means upon rotation of said rotor.

4,064,791
METHOD AND APPARATUS FOR MAKING TOBACCO SMOKE FILTER
Richard M. Berger, Richmond, Va., assignor to American Filtrona Corporation, Richmond, Va.
Division of Ser. No. 629,680, Nov. 6, 1975, Pat. No. 4,026,306. This application Aug. 13, 1976, Ser. No. 714,237
Int. Cl.² A24C *5/50*
U.S. Cl. 93—1 C **19 Claims**

1. A method of making smoke filters comprising the steps of:
a. providing a multiplicity of discrete inner plug members;
b. continuously feeding said inner members along a path of travel;
c. providing a filtering material including a multiplicity of fibrous elements;
d. defining a bonding zone in the form of an annular space in said path of travel of said inner members;
e. continuously passing said filtering material into and through said annular space in said bonding zone and, intermediate the passage of said filtering material through said bonding zone, contacting same with a bond activating agent to bond said fibrous members of said filtering material to each other at spaced contact points thereby forming an elongated, smoke-permeable, annular intermediate member having a continuous axial bore therein and defining an annular tortuous path for passage of smoke;
f. continuously feeding said inner members into said bore in

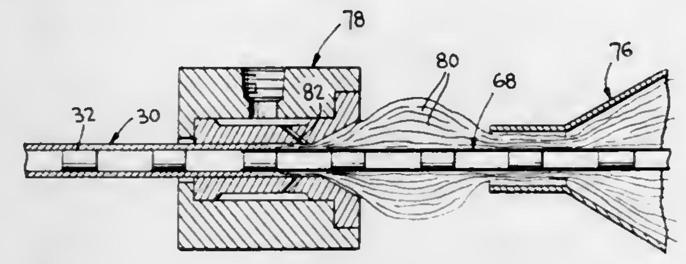

axially spaced relationship to form discrete cavities within said intermediate member separated from each other by said inner members;
g. overwrapping said intermediate member with an overwrapping material so as to juxtapose the inner surface of said overwrapping material with the exterior surface of said intermediate member to form sealed areas precluding passage of smoke thereacross; and
h. transversely severing the resulting product at selected locations to form individual filter elements.

4,064,792
APPARATUS FOR PRODUCING A PACKAGE
Larry C. Gess, 1481 Longfellow, Temperance, Mich. 48182
Division of Ser. No. 577,354, May 14, 1975, Pat. No. 4,030,662. This application Apr. 15, 1976, Ser. No. 677,326
Int. Cl.² B31B *19/00*
U.S. Cl. 93—18 **6 Claims**

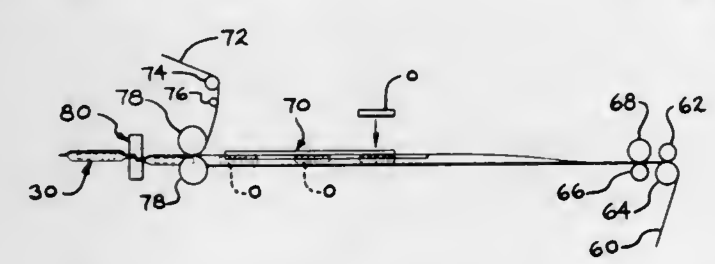

1. Apparatus for producing containers for holding objects, said apparatus comprising means for supporting a supply of a first web of material, means for producing first score lines on one surface of said web parallel to longitudinal edges thereof, means for producing second score lines on the other surface of said web parallel to said first score lines and between said first score lines and the longitudinal edges of said web, means for bending said web along the first score lines and in a direction to move the one surface toward itself, means for bending said web along the second score lines and in a direction to move the other surface toward itself, means supporting a second supply of a second web of material, means for bringing the second web into contact with portions of said first web between the longitudinal edges thereof and said second score lines, and means for pressing spaced transverse portions of said first and second web together, for bending and pressing together adjacent portions of said first web between said first and said second score lines, and for substantially simultaneously severing the pressed transverse portions along central transverse lines.

4,064,793
EXPANDABLE DOUBLE WALLED SMOKE STACK
Ira Michael Bennett, 307 Flora Ave., Stanhope, N.J. 07874
Continuation-in-part of Ser. No. 633,012, Nov. 18, 1975, abandoned, which is a continuation-in-part of Ser. No. 607,765, Aug. 25, 1975, abandoned. This application Oct. 20, 1976, Ser. No. 734,337
Int. Cl.² E04F *17/02*
U.S. Cl. 98—58 **10 Claims**

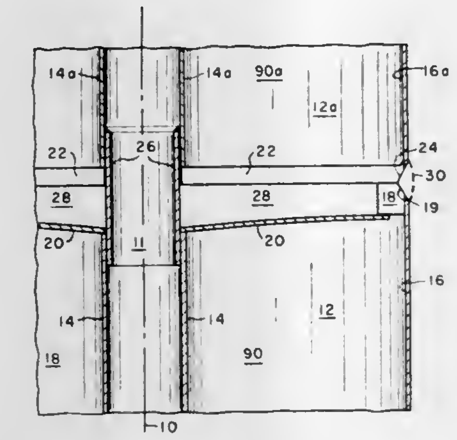

1. A double walled expandable smoke stack section comprising inner and outer shells, a flange plate extending between said shells at the bottom thereof, a closure plate secured to said inner shell at the bottom thereof and extending downwardly from said flange plate, and a movable member means rigidly secured at its ends between the tops of said shells for enclosing the space between said shells and for preventing particles from entering said space.

4,064,794
APPARATUS FOR SKINNING OR PEELING PRODUCE SUCH AS FRUITS AND VEGETABLES
Paul Kunz, 5419) Doettesfeld, Germany
Division of Ser. No. 469,613, May 13, 1974, Pat. No. 3,959,506. This application Mar. 12, 1975, Ser. No. 557,633
Claims priority, application Germany, Dec. 6, 1973, 2360886; May 18, 1973, 2325293
Int. Cl.² F16J *13/02*
U.S. Cl. 99—474 **18 Claims**

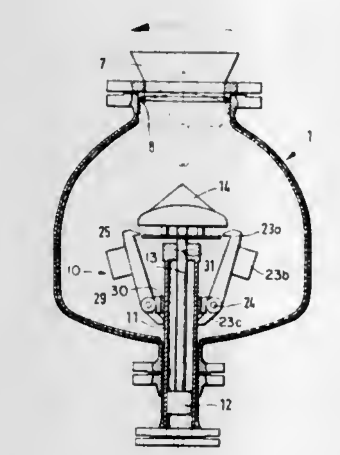

1. A rotatably supported pressure vessel comprising an opening, sealing cover means for closing said opening, said sealing cover means including pawl catch means, opening and closing means located at least partly inside said pressure vessel, said opening and closing means including piston cylinder means arranged for operating said sealing cover means, means mounting said sealing cover means to said piston cylinder means so that the sealing means are movable under the force of gravity towards and away from said opening, said opening and closing means further comprising latching pawl means and pivot means pivotally mounting said latching pawl means within said pressure vessel, said latching pawl means being so weighted that upon rotational movement of said pressure vessel said latching pawl means is movable in response to gravity about said pivot means into a first position engaging said pawl catch means and into a second position disengaging said pawl catch means, said pressure vessel being adapted to assume a first angular position in which said latching pawl means is moving from its disengaged to its engaged position and said cover is maintained in its open position by its own weight and a second angular position in which said latching pawl means is moving from its engaged to its disengaged position and said cover is again maintained in its open position by its own weight.

4,064,795
AUTOMATIC BYPASS COFFEE BREWER
Maria Elena Perdomo Ackerman, Rte. 3, Box 373D, Kinston, N.C. 28501
Filed June 1, 1976, Ser. No. 691,442
Int. Cl.² A41J *31/00*
U.S. Cl. 99—304 **9 Claims**

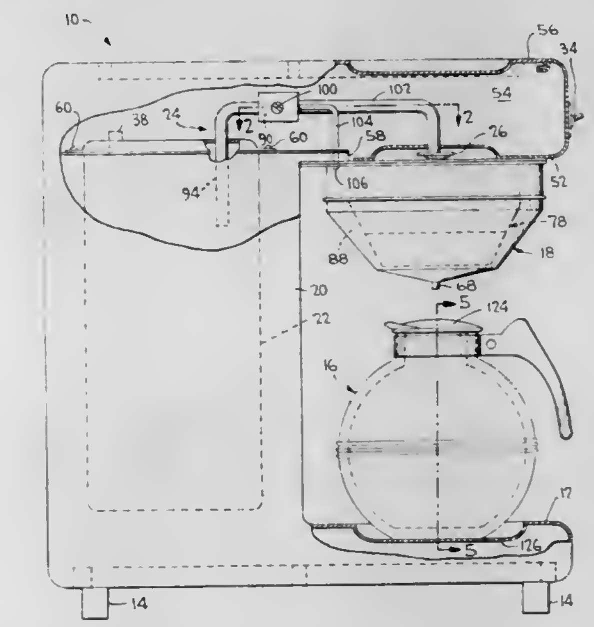

1. An automatic coffee brewer comprising: a water tank, means for heating water in said tank, a holder for coffee grounds, a beaker for brewed coffee positioned under said grounds holder, and means for dispensing a predetermined amount of hot water from said tank to said grounds holder, said means including bypass means for conducting a portion of said predetermined amount of hot water directly to said beaker so as to bypass grounds in said holder.

4,064,796
COOKING APPARATUS
John R. Jones, 4793 Coventry Mall, Memphis, Tenn. 38118
Filed Aug. 2, 1976, Ser. No. 710,917
Int. Cl.² A47J *37/00*
U.S. Cl. 99—330 **8 Claims**

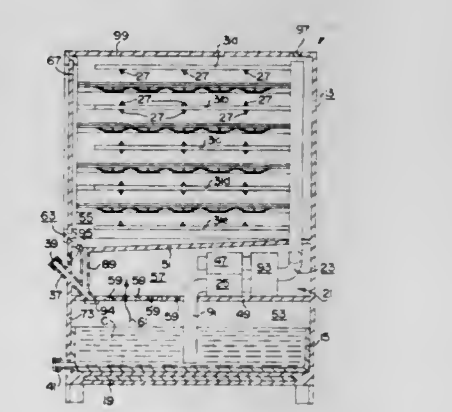

1. An apparatus for cooking various food items, said apparatus comprising a housing, a reservoir for containing a quantity of cooking oil, rack means for suspending the items of food

within said housing at a spaced distance one from the other, means for heating the cooking oil, vaporescence means communicated with said reservoir for forming a mist of the hot cooking oil within said housing with the suspended items of food being suffused by the mist of hot oil whereby the cooking process of the food is accomplished, forced air circulation means communicated with said housing for circulating air therethrough, said forced air circulation means and said vaporescence means being selectively and alternatively operable, and means for directing the circulating air in proximity to said reservoir of hot oil whereby the circulating air is first warmed by the hot oil.

4,064,797
BACON COOKING DEVICE
Al Forlani, 811 Hibiscus Lane, Vero Beach, Fla. 32960
Filed Apr. 2, 1976, Ser. No. 673,282
Int. Cl.² A47J *37/00*
U.S. Cl. 99—341 **6 Claims**

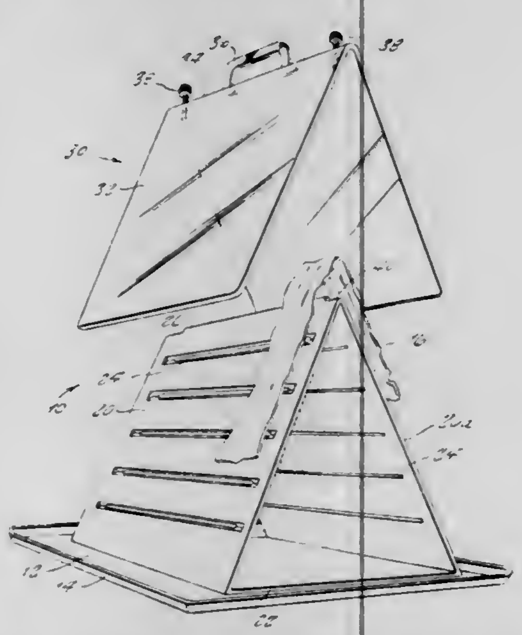

1. An oven proof bacon-strip cooking air for use in connection with the cooking of bacon in the chamber of an oven, comprising a tray portion having upwardly inclined side walls, said tray portion adapted to receive and retain cooking grease from said bacon, a bacon support member including two inclined side walls converging at an apex for receipt of said bacon thereon, said side walls defining a plurality of elongated apertures adapted to channel said grease off of said side walls and into said tray portion, a cover portion comprised of two inclined walls converging at an apex, said cover portion having an internal area greater than said bacon support member whereby said cover portion fits thereover and cooperates therewith, handle means disposed on said apex of said cover, spacing means on said cover apex adapted to engage the apex of said bacon support member whereby said cover portion may be adjustably spaced thereover and for pressing on said bacon.

4,064,798
RECEPTACLE FOR TRASH COMPACTORS
David W. Wolbrink, Hartford; Robert J. Budyak, Greendale; Du Wayne M. Sellinger, Hartford, and William A. Kaepernick, Horicon, all of Wis., assignors to Broan Manufacturing Co., Inc., Hartford, Wis.
Filed Sept. 26, 1975, Ser. No. 617,090
Int. Cl.² B30B *15/06*
U.S. Cl. 100—229 A **13 Claims**

1. In a trash compactor having a positioning means for mounting a compaction means along a compaction axis, the improvement comprising:

a support deck having generally parallel movement means mounted on either side thereof engagable in said positioning means for moving said support deck with respect to said positioning means in a direction generally perpendicular to said compaction axis;

a generally rectangular receptacle for containing the trash to be compacted, said receptacle including a wall means having a pair of planar side walls and a rear end wall formed of flexible sheet material, said wall means being affixed to a surface of said support deck intermediate said movement means so that said surface of said support deck forms a bottom for said wall means, said receptacle being positionable along said compaction axis and sized to receive said compaction means, said planar side walls being spaced inwardly from the sides of said deck and said movement means a distance sufficient to prevent deflection or distortion of said receptacle from affecting the operation of said movement means; and

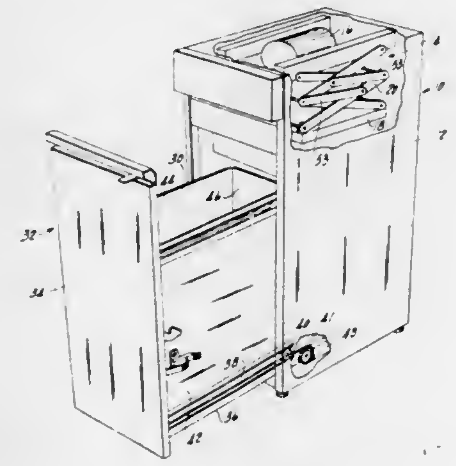

a front panel hingedly retained on at least one of said support deck and wall means for movement between a closed position in which said front panel abuts the forward portions of said side walls to form a front end wall of said receptacle and an open position permitting removal of the compacted trash from said wall means, said front panel being mateable with said positioning means and forming, with said support deck, a drawer for the trash compactor, said front panel having flange means for embracing the forward portions of said side walls when said front panel is in the closed position along substantially the entire dimension in abutment with said front panel, said flange means being formed to permit the hinged movement of said front panel with respect to said side walls and to brace the forward portion of said side walls when said front panel is closed while allowing said side walls to flex when said front panel is open.

4,064,799
PRINT HAMMER BUMPER EXHIBITING DUAL RESILIENCY CHARACTERISTICS
Egon S. Babler, Northbrook, Ill., assignor to Teletype Corporation, Skokie, Ill.
Filed Nov. 26, 1976, Ser. No. 745,013
Int. Cl.² B41V *9/00*
U.S. Cl. 101—93.02 **9 Claims**

1. In an on-the-fly impact printer including a print hammer mechanism having a plurality of selectively actuable print hammers disposed in a lateral array with each hammer movable along a linear path for printing on a web composed of at least a single sheet of paper; the hammers exhibiting a forward movement directed toward the paper web during printing and a rebound movement produced by the abrupt termination of the forward hammer movement upon completion of a printing operation, an improved bumper mechanism for automatically adjusting the forward force of the hammer to the number of paper plys of the web and for damping the rebound energy of the hammer upon its return stroke comprising:

a unitary elongated resilient bumper positioned to engage each of said print hammers during their printing stroke and for engaging said print hammers upon the return stroke;

said unitary bumper defining a first portion fabricated of a first material for engaging each of the hammers during their printing stroke and exhibiting a hardness characteristic selected to reduce the forward impact force of each of the hammers upon the paper to that force necessary to produce an acceptable print upon each of the sheets in the web and having a first resiliency, and

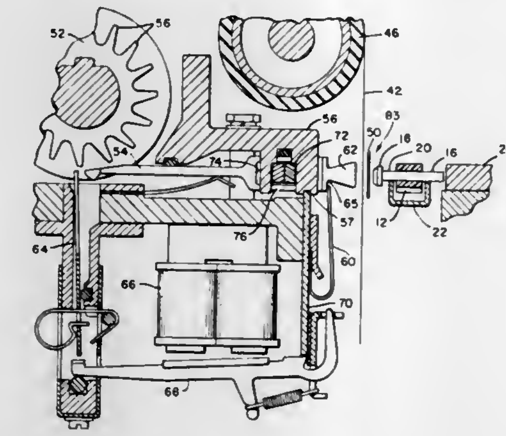

said unitary bumper defining a second portion fabricated of a second material for engaging each of said hammers during their return stroke and exhibiting a second resiliency lower than said first resiliency so as to quickly absorb the return forces of each hammer thereby greatly reducing the intensity and duration of the hammer rebound upon return to its nonprint condition.

4,064,800
PRINTER DEVICE USING TIME SHARED HAMMERS
Sebastian W. Paccione, Norristown, and Theodore J. Risnychok, Blue Bell, both of Pa., assignors to Sperry Rand Corporation, New York, N.Y.
Filed Mar. 1, 1976, Ser. No. 662,799
Int. Cl.² B41J *1/20*
U.S. Cl. 101—93.14 **1 Claim**

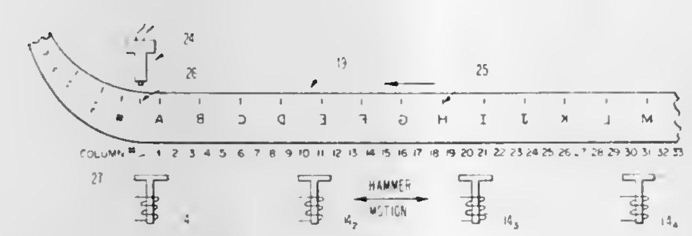

1. A printer device having a single moving character band and a plurality of print hammers which are separated from each other across a line of print by a distance wherein each respective hammer is time shared with a plurality of print locations along said print line, the improvement comprising:

a. a barrel cam which is continuously rotated in a single direction on a shaft by a motor means;
b. follower means coupled to said barrel cam and the respective hammers;
c. a cam rotation of 180 degrees causing said follower means and each said print hammer to be linearly translated over said plurality of print locations for time sharing each respective hammer to record a line of print in a first direction;
d. the cam rotation of an additional 180° causing said follower means and each said hammer to be linearly translated in a reverse direction over said plurality of print locations for time sharing each respective hammer to record a line of print in a second direction;
e. each moving print hammer having a width dimension such that each time-shared hammer is in a position to print any character from said single moving band at a print location center before being translated to an adjacent print location center, and the width dimension of said moving hammers are approximately twice the separation of adjacent print location centers;
f. a disc means positioned on said shaft having a first and second group of indicia,
one group of indicia indicating the particular column position of each time-shared print hammer in said first direction and,
one group of indicia indicating the particular column position of each time-shared print hammer in said second direction.

4,064,801
SPRAY DAMPENING SYSTEM FOR OFFSET PRINTING
Thomas G. Switall, Chicago, Ill., assignor to Ryco Graphic Manufacturing, Inc., Chicago, Ill.
Continuation-in-part of Ser. No. 604,016, Aug. 12, 1975, abandoned. This application Sept. 13, 1976, Ser. No. 722,623
Int. Cl.² B41F *7/24;* **B41L** *25/06*
U.S. Cl. 101—147 **16 Claims**

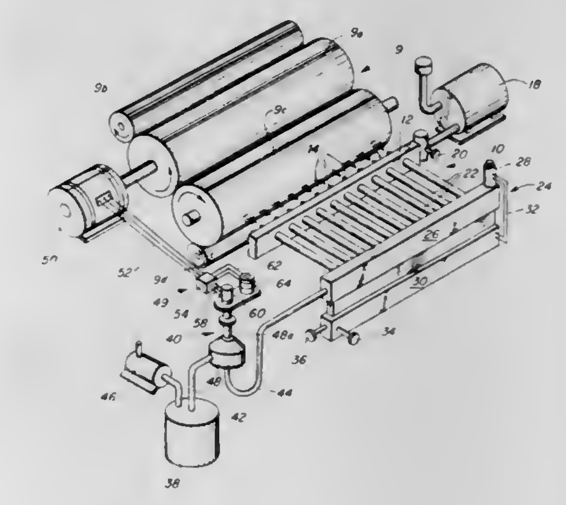

1. In a spray dampening system for delivering a dampening fluid to a rotating cylinder of a printing press; a plurality of spray nozzles; means supplying air under pressure to said nozzles to atomize and transport the dampening fluid to the printing press cylinder; fluid delivery means for delivering dampening fluid to said nozzles, said fluid delivery means including first fluid regulating means for adjustably restricting the passage of dampening fluid through said fluid delivery means to said nozzles, second fluid regulating means for adjustably regulating the pressure of the fluid delivered to said nozzles by said fluid delivery means; and regulator control means, comprising first sensing means for sensing the speed of the press, second sensing means for sensing the state of one of said fluid regulating means, and means operatively connected to said one fluid regulating means and responsive to said first and second sensing means for adjusting said one fluid regulating means in accordance with the speed of the press, whereby the flow of fluid to the nozzles may be adjustably regulated.

4,064,802
ROTARY STAMP
Takaji Funahashi, No. 2-1, Kitatakasho, Nishi, Nagoya, Aichi, Japan
Filed Oct. 26, 1976, Ser. No. 735,527
Claims priority, application Japan, Nov. 6, 1975, 50-151185[U]; May 25, 1976, 51-6696[U]
Int. Cl.² B41K *1/10*
U.S. Cl. 101—327 **2 Claims**

1. A rotary stamp comprising an upper frame having a substantially U-shaped form and including a top plate and a pair of facing side plates connected to both ends of the top plate, respectively, a fixed shaft supported substantially midway between said side plates, a bridge laid out between the lower ends of said side plates, a plurality of cylindrical rotary members rotatably supported on said fixed shaft in said upper frame, each rotary member having an annular disc formed integrally

with one end thereof and toothed on the circumference thereof, a plurality of endless belts, each endless belt being stretched around said bridge and the corresponding rotary member and having on the surface thereof a plurality of printing members, a lower frame including a plate having an opening at the center thereof and a pair of facing frame plates attached in an erect posture on both sides of said opening, respectively, said plate having another printing member fixed to the lower face thereof by bonding or other means and said opening having such a size that when the endless belts are located below said bridge, the printing members of said endless belts are well fitted within said opening, the improvement comprising the provision in each of said side plates of the upper frame, of a pair of parallel vertical slots, each frame plate of said lower frame having a pair of inwardly facing side plates connected to both the side ends thereof, spring means attached to the inside of each frame plate of said lower frame, each of said spring means including a central plate and a pair of spring plates connected to both side ends of the central plate, each of said spring plates having, on the inner face thereof a projection to be engaged with a corresponding one of said vertical slots

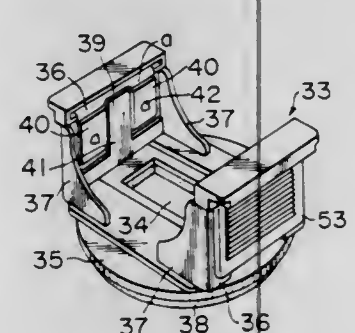

and capable of sliding along said vertical slots, the central plate of each spring means being attached to the inner face of said frame plate, each spring plate being arranged so that a spacing is formed between the spring plate and the inner face of said frame plate and a spacing is also formed between the outer end of the spring plate and said inwardly facing side plates, a T-shaped arm plate connected to the lower end of said central plate, said T-shaped arm plate having a pair of arm members in the lower portion thereof, and the lower end of each arm being pressed into the plate of the lower frame and the free end of each arm being kept in contact with said inwardly facing side plate wherein by engagement of the projections on the spring means with the vertical slots on both the side plates and sliding movement of said projections along said vertical slots, said upper frame is allowed to move in the vertical direction with respect to the lower frame and when the endless belts are located below said bridge, the printing members of the endless belts are allowed to move in the vertical direction along a distance between a position at which said printing members of the endless belts are on a plane common with said other printing member on the lower face of the plate of the lower frame and a position retreated from said position.

4,064,803

PRINTING SADDLE WITH ROCKER ARM LOCKUP

David B. Czinger, Huntington Beach, Calif., assignor to Beach Manufacturing Corporation, Huntington Beach, Calif.

Filed Sept. 7, 1976, Ser. No. 721,105

Int. Cl.[2] B41F *27/14*

U.S. Cl. 101—415.1 **6 Claims**

1. Rocker arm actuated printing saddle apparatus comprising:

an elongated semicylindrical shell formed on its interior with a medial rocker arm recess leading to one end of said shell and a central link recess leading from the inner extremity of said rocker arm recess to one side of said shell;

a biasing bar projecting along said one side;

biasing means biasing said bar away from said one side of said shell;

an elongated resilient rocker arm disposed in said rocker arm and terminating at its outer extremity in a latch keeper shiftable between latched and unlatched positions upon rotation of said rocker arm in opposite directions;

pivot means pivotally mounting said rocker arm medially from said shell to retain said arm against said shell to urge said latch keeper resiliently against said shell;

a link connecting the inner extremity of said rocker arm with said biasing bar to cause said biasing means to bias said arm in one direction to said unlatched position; and lock

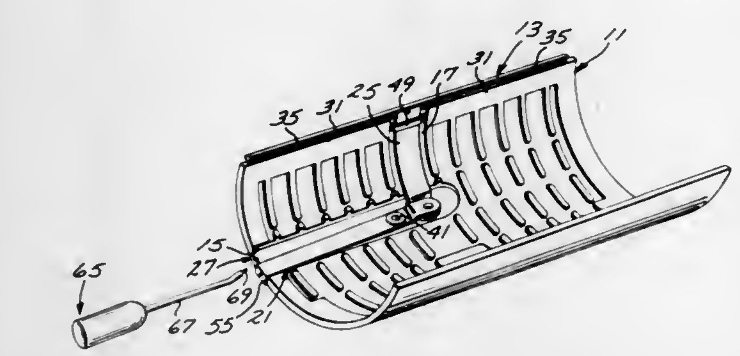

means mounted on said shell adjacent the free extremity of said rocker arm including a hook positioned to cause said rocker arm to resiliently urge said keeper into engagement therewith when said arm is in its latched position whereby said biasing bar will be normally biased to pivot said rocking arm to its unlatched position but upon rotation of said rocker arm to its latched position said latch keeper will be engaged with said hook to retain said biasing bar retracted.

4,064,804

DUPLICATOR AND METHOD OF DUPLICATING

Roy C. Schweitzer, Hoffman Estates, Ill., assignor to Addressograph Multigraph Corporation, Cleveland, Ohio

Filed June 26, 1975, Ser. No. 590,700

Int. Cl.[2] B41M *1/06;* **B41F** *7/24, 31/00*

U.S. Cl. 101—451 **18 Claims**

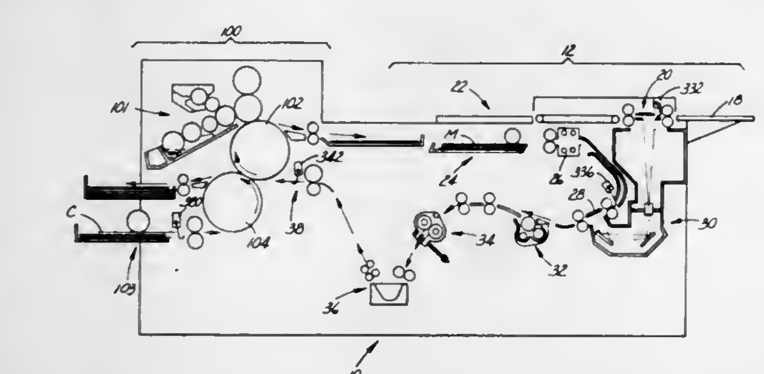

1. The method of lithographic duplicating on a rotary lithographic duplicator which comprises applying ink from an ink fountain to a lithographic master on a master cylinder by means of an ink train including a fountain roller and an ink form roller, which includes the steps of:

sensing the temperature at the ink fountain and generating electrical signals indicative thereof; and

in response to said signals automatically controlling the speed of transfer of ink from the ink fountain roller to the ink form roller in inverse relation to the temperature level sensed.

6. A method of duplicating on a rotary lithographic duplicator having a master cylinder which comprises the steps of automatically preparing and processing lithographic masters and forwarding them in sequence to the master cylinder, applying moisture from a moisture fountain to each lithographic master on the master cylinder by means of a moisture train, and which includes the step of automatically interrupting the operation of the moisture train to prevent the forwarding of moisture when a used master leaves the master cylinder, and the step of automatically restoring operation of the moisture train whenever a new master approaches the master cylinder, which method includes the steps of:

automatically measuring the time between the departure of one master from the master cylinder and the preparation of the next master;

when the measured time is less than a predetermined normal dry-out time for the moisture train, automatically triggering the restoration of operation of the moisture train as the new master is inserted onto the master cylinder; and

when the measured time exceeds said predetermined normal dry-out time for the moisture train, automatically triggering the restoration of operation of the moisture train during the preparation of the new master approaching the master cylinder substantially in advance of its insertion on the master cylinder.

18. The method of lithographic duplicating on a rotary lithographic duplicator which includes a down-counting copy counter settable to control the number of copies to be printed in the next printing run of the duplicator, means for selectively activating the ink and moisture trains for either of two determinate pre-inking periods of different durations each of fixed extent, one of said determinate pre-inking periods corresponding to one range of copy count settings of the down-counting copy counter and the other determinate pre-inking period corresponding to another range of copy count settings of the down-counting copy counter, which method comprises applying ink and moisture to the surface of a lithographic master by means of ink and moisture trains and which includes the step of pre-treating each new master with ink and moisture for a pre-inking period before starting to print, and which method further includes the steps of:

setting a desired number of copies into the down-counting copy counter; and

automatically controlling the selectively activating means in response to the copy count setting of the down-counting copy counter in a manner to select the determinate pre-inking period corresponding to that range of copy count settings which embraces the existing copy count setting.

4,064,805

DEVICE FOR PYROTECHNICAL ILLUMINATING CHARGE

Stig Erland Dahlberg, Bjorneborg, and Nils Goran Axel Gellerstedt, Karlskoga, both of Sweden, assignors to AB Bofors, Bofors, Sweden

Filed May 19, 1976, Ser. No. 687,804

Claims priority, application Sweden, May 23, 1975, 7505877

Int. Cl.[2] F42B *25/04, 13/38*

U.S. Cl. 102—35 **20 Claims**

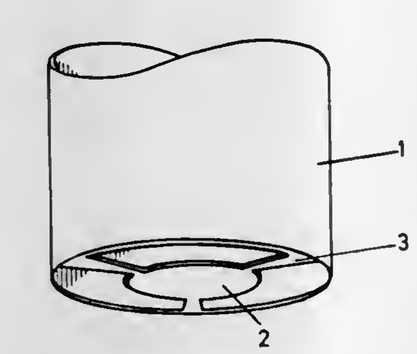

1. An improved pyrotechnical illuminating apparatus of the type adapted for use in parachute flares, comprising:

an essentially cylindrical container for an illuminating charge, said container having an open end from which light-emitting flame gases and other products of combustion issue in use;

flame distributing disc means arranged across said open end for spreading said flame gases radially outwardly as they issue from said container to create a turbulent admixture of air and the gases and other products issuing from said container during combustion; and

an illuminating charge located within said container which comprises a metallic reducing agent, an oxidizing agent and a bonding agent, the quantity ratio of the reducing agent to the oxidizing agent being substantially greater than the ratio for such a charge would be for efficient combustion in an apparatus having no such flame distributing disc means arranged to spread flame gases and other products of combustion,

whereby a substantial excess of reducing agent is carried unburned from said container with the flame gases generated upon combustion of said charge; is spread out by said flame distributing disc means; and is mixed turbulently with the surrounding air in the outer portions of the flame gases, the quantity of said substantial excess being sufficient to produce high intensity light emitting flames.

4,064,806

ULTRASONIC REMOTE CONTROL SYSTEM

Maurice Apstein, Bethesda, Md., and Henry P. Kalmus, Washington, D.C., assignors to The United States of America as represented by the Secretary of the Army, Washington, D.C.

Filed Sept. 1, 1976, Ser. No. 719,861

Int. Cl.[2] F42C *17/00*

U.S. Cl. 102—70.2 R **9 Claims**

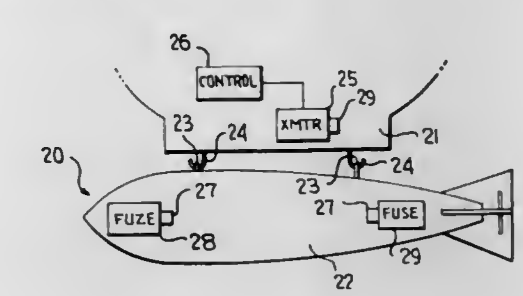

1. The method of transmitting information from a first location in a structure to one or more remote locations in said structure, said method comprising the steps of:

generating an alternating ultrasonic electrical signal representing said information;

frequency-modulating said electrical signal;

at said first location, transducing said electrical signal to surface wave vibrations in said structure, said surface waves being spatially shifted at the modulation frequency;

at said one or more remote locations, transducing said surface wave vibrations back into an electrical signal.

4,064,807

MOBILE APPARATUS FOR NON-STOP TRACK LEVELING AND BALLAST TAMPING

Josef Theurer, Vienna, Austria, assignor to Franz Plasser Bahnbaumaschinen Industriegesellschaft m.b.H., Vienna, Austria

Filed May 26, 1976, Ser. No. 689,993

Claims priority, application Austria, Aug. 18, 1975, 6395/75

Int. Cl.[2] E01B *29/04*

U.S. Cl. 104—7 A **9 Claims**

1. In a mobile apparatus for continuously leveling a track and compacting ballast of a ballast bed supporting the track consisting of two rails fastened to ties resting on the ballast, which comprises a frame mounted on the track for continuous advancement therealong during the leveling and ballast compaction, a reference system controlling the track leveling, a roller unit mounted on the frame for lifting a section of the track, plow means mounted on the frame for moving ballast onto the ballast bed below the lifted track section and for leveling the said ballast, and a ballast compacting means mounted rearwardly of the plow means in the direction of advancement, the ballast compacting means comprising means for imparting vibrations to the track and hydraulic load means

associated therewith for simultaneously exerting pressure to both rails of the track section in the direction of the leveled ballast bed whereupon the track section rests, the combination of

1. the plow means comprising plow elements for moving the ballast so that there are formed two elongated raised ballast strips below the track rails for support of the ties in the region of the rails and an elongated intermediate strips between the two raised ballast strips, the intermediate strip being recessed, and
2. the ballast compacting means comprising a chassis supporting a means for generating at least approximately

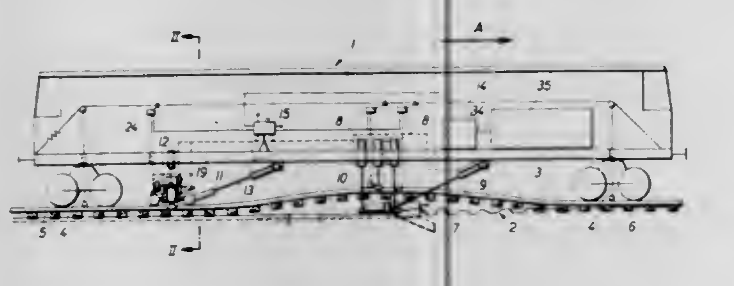

horizontal vibrations and the hydraulic load means, the chassis having

a. rail engaging and guiding means associated with each of the rails and mounting the chassis for mobility on the track, the vibration generating and load means being associated with the rail engaging and guiding means for simultaneously laterally vibrating and vertically loading each of the rail engaging and guiding means, and
b. pressure fluid operated means for continuously laterally pressing the rail engaging and guiding means without play with respect to the chassis and against the rail with which it is associated.

4,064,808

ARMATURE RAILS AND RAIL CARRYING ARRANGEMENT FOR ATTRACTION TYPE MAGNETICALLY FLOATED TRAVELLING BODY

Shinji Nakamura, Kawasaki, and Kiyoshi Mihirogi, Odawara, both of Japan, assignors to Japan Air Lines Co., Ltd., Tokyo, Japan

Filed Apr. 6, 1977, Ser. No. 785,296

Claims priority, application Japan, Mar. 8, 1977, 52-25285

Int. Cl.² B61B *13/08*

U.S. Cl. 104—148 MS **6 Claims**

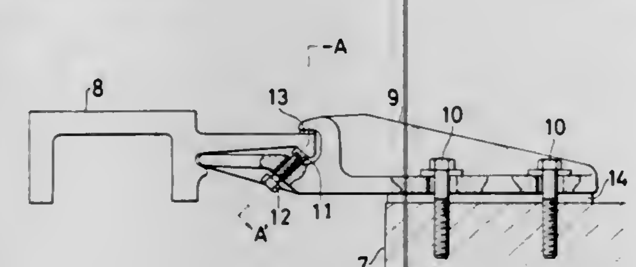

1. A structural arrangement for carrying armature rails of an attraction type magnetically floated travelling body comprising a plurality of carrying blocks which are fixed to bases and are arranged with spacing in the longitudinal direction of said rails; and an armature rail which is carried along the side of the bases by the carrying blocks, said armature rail being provided with a groove and a flange formed on one side thereof confronting the carrying block, each carrying block being provided with a groove which engages with the tip of the flange of the armature rail and with an extruding arm which engages with the groove provided in the armature rail, the structural arrangement further including a tightening means for connecting each armature rail to each carrying block by tightening the engagement of the flange of the rail with the block and the engagement of the extruding arm of the block with the groove of the rail respectively.

4,064,809

ARTICULATED RAILWAY CAR TRUCK

Harry William Mulcahy, Griffith, Ind., assignor to AMSTED Industries Incorporated, Chicago, Ill.

Filed Jan. 12, 1976, Ser. No. 648,112

Int. Cl.² B61F *3/08, 3/16, 5/30, 5/40*

U.S. Cl. 105—167 **5 Claims**

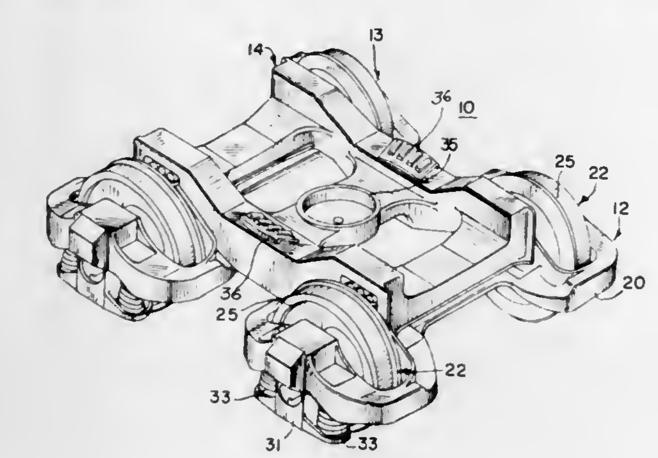

1. A four wheel truck for a railway freight car and the like comprising

a pair of longitudinally spaced apart axle bolsters;
independently rotatable wheels mounted at opposite ends of each axle bolster;
a span bolster connecting each of said axle bolsters; and
mounting means mounting said axle bolsters for independent movement relative to each other and to said span bolster for yawing movement about respective vertical axes located approximately on the respective axis of rotation of said wheels at each end of said axle bolster and substantially midway of said wheels at each end of said axle bolster.

4,064,810

RAILWAY CAR DOOR ACTUATING APPARATUS

Oliver James Jenkins; Walter Samuel Ryan, both of Youngstown, and Leslie David Suit, Girard, all of Ohio, assignors to The Youngstown Steel Door Company, Cleveland, Ohio

Filed Oct. 24, 1975, Ser. No. 625,490

Int. Cl.² B61D *17/08, 17/18, 19/00;* **E05D** *15/10*

U.S. Cl. 105—378 **7 Claims**

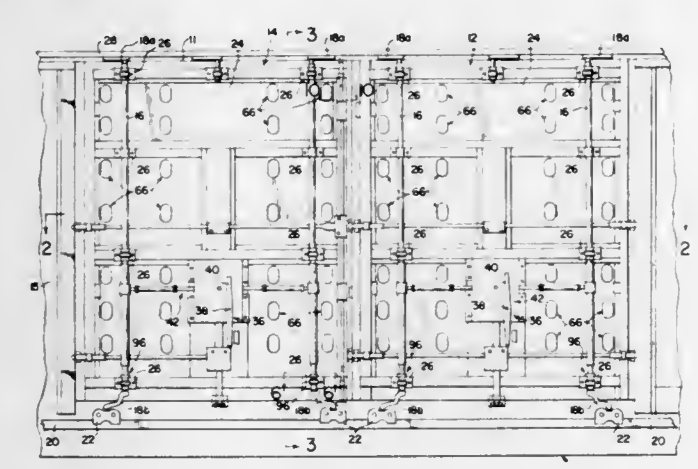

1. In a railway car door of the type including a pair of pipes and cranks rotatably secured to the door, an operating mechanism for rotating said pipes and cranks including a shaft rotatably supported on said door, activating means secured on said shaft and transmission means supported on said door inter-connecting said operating mechanism with said pipes and cranks whereby rotation of said shaft in response to operation of said activating means imparts corresponding rotation to said pipes and cranks and selective lateral movement of said door into and out of an opening in the side of said railway car, said car being equipped to have internally projecting lading restraining members selectively attached and removed from the inside of the railway car side wall adjacent said opening, and filler members removably attached to the inside of said door, said filler members project into said car by an amount substantially equal to the internal projection of said lading restraining members, the improvement comprising:

means for selectively increasing and decreasing the amount of rotation of said pipes and cranks possible such that when said filler members are attached to the inside of said door, said pipes and cranks can move a greater rotational distance to move said door laterally out of said opening a first, greater distance to permit said filler members to clear said side wall; and, when said filler members are removed, said cranks and pipes are permitted to rotationally move a lesser distance which is sufficient for said door without said filler members attached thereto to move a second, lesser distance laterally out of said opening and to clear said side wall.

4,064,811

QUICK DISCONNECT ANCHOR

Donald R. Copeland, 11718 E. 1st St., Tulsa, Okla. 74128

Filed Dec. 22, 1975, Ser. No. 642,918

Int. Cl.² A44B *19/00;* **B25B** *25/00;* **B60P** *7/06;* **B61D** *45/00*

U.S. Cl. 105—476 **9 Claims**

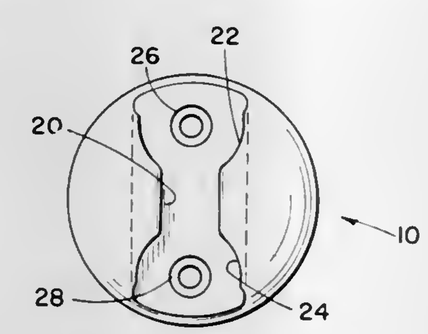

1. Quick disconnect device for attachment of objects to a fixed surface relative thereto comprising a spherical segment shoe member having a flat base surface securable to the fixed surface, a channel groove transversely extending completely through the segment parallel to the base surface and having the opposite ends open, inwardly extending flange members making up a portion the outer surface of the spherical segment and forming a narrow slot between said flanges, enlarged openings in the flanges at each end of the channel groove in communication with the respective open ends thereof; a coupling means attachable to the spherical segment and comprising a foot member slidable through said open ends into the channel groove, attachment means secured to the foot member for the attachment of movable objects, retainer means carried by the attachment means and engageable with the shoe member to selectively lock the foot member within the channel groove.

4,064,812

FOLDABLE PICNIC TABLE

Ephrem Commanda, P.O. Box 1244, Espanola, Ontario, Canada

Filed June 15, 1976, Ser. No. 696,414

Int. Cl.² A47B *3/00, 35/00;* **F24C** *15/10*

U.S. Cl. 108—36 **5 Claims**

1. A foldable picnic table comprising two similar table top portions hinged together along a first hinge axis for movement from a co-planar relationship providing a normal table top, to a folded relationship in which the undersides of said portions lie substantially parallel and spaced apart to provide a storage space therebetween, said portions each having two legs with a connecting member extending between and rigidly fixed to said legs, said connecting member and legs being hingedly connected to the respective table top portion by hinge means

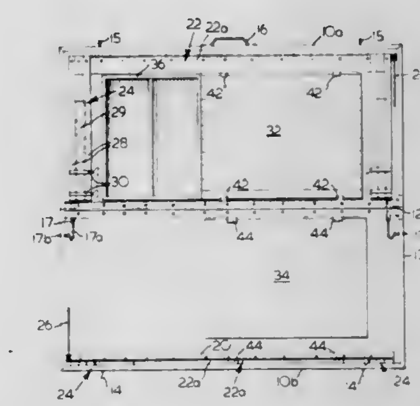

extending parallel to said first hinge axis, said legs and member being foldable against the underside of the respective table top portion and being capable of fitting between said table top portions when folded, and wherein said connecting member includes retaining means moveable therewith to hold a removable picnic device firmly against the underside of one of said table top portions when the table is folded.

4,064,813

SHELVES

Alan R. Hewett, and Leonard T. Robilliard, both of Hemel Hempstead, England, assignors to Dexion-Comino International Limited, Middlesex, England

Filed Oct. 20, 1976, Ser. No. 733,988

Claims priority, application United Kingdom, Oct. 22, 1975, 43392/75

Int. Cl.² A47B *57/00*

U.S. Cl. 108—60 **16 Claims**

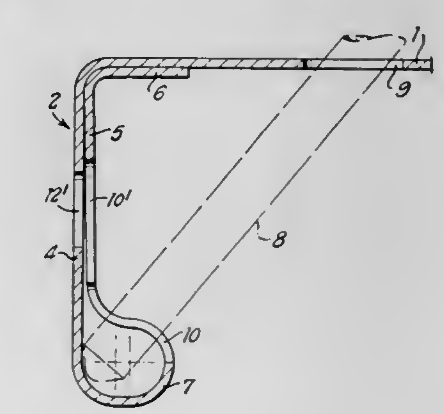

1. A shelving apparatus comprising:

a shelf panel,
an edge flange formed integrally with said shelf panel,
said flange comprising a first portion depending from said panel and a second portion which lies against the inside of the first portion and extends to and beyond the line of junction of said first portion with said shelf panel,
said second portion lying also against a marginal portion only of the underside of said panel.

4,064,814

SELF-LEVELING EXTENDABLE TABLE

Joseph E. Pokorny, 500 Saylor Way, Las Vegas, Nev. 89107, and Richard N. Keller, 2818 E. Tonopah, North Las Vegas, Nev. 89030

Filed Mar. 7, 1977, Ser. No. 774,676

Int. Cl.² A47B *13/06*

U.S. Cl. 108—64 **8 Claims**

1. A table which tends to be stable and to maintain the top in

a horizontal plane when set on a slightly irregular surface comprising a rectangular horizontal flat top affixed to a base, the base comprising:

a horizontal rectangular angle iron support frame,

a plurality of pairs, disposed lengthwise, of tubular crossed legs, the legs of each pair being fixably mounted to and

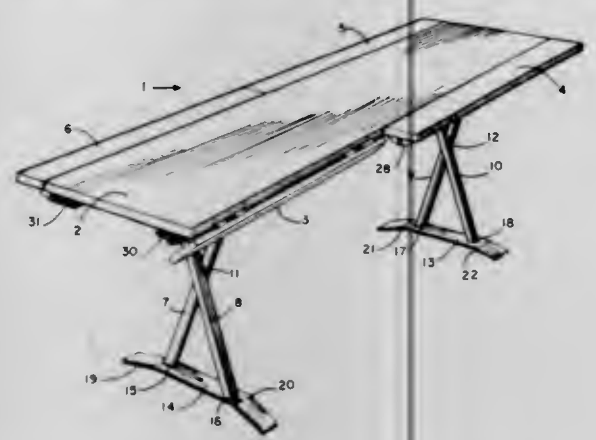

depending downward from opposing lengthwise sections of the angle iron support frame, and being immovably attached to each other at the point of crossing,

each pair of legs affixed to a foot comprising a substantially flat member situated widthwise to the table, said flat member being slightly arched so as to contact a supporting floor surface only at the ends of the flat member.

4,064,815

TABLE LEG LOCKING MECHANISM

Elliott W. Baum, St. Louis, Mo., assignor to Berco Industries, St. Louis, Mo.

Filed July 19, 1976, Ser. No. 706,737

Int. Cl.^{2} A47B *3/08*

U.S. Cl. 108—129 **5 Claims**

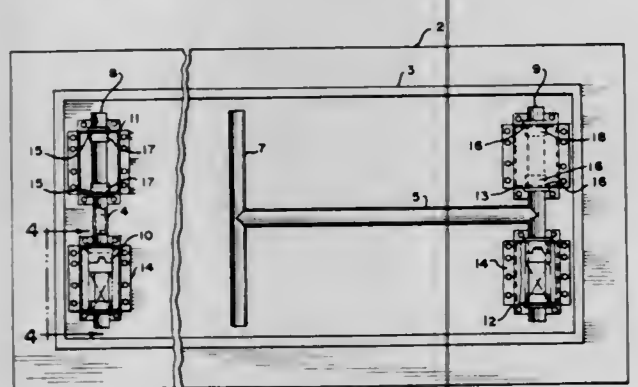

1. A table leg locking mechanism for use in fixing a leg with respect to the table means it supports comprising, a cross bar rigidly secured to the table leg, at least one pivot mount secured to said table means and having the cross bar pivotally disposed therethrough, each pivot mount comprising a pair of box shaped housings secured to the underside of the table means, each housing having a pair of aligned apertures provided therethrough, a bushing means being retained proximate each aperture of the housing, said cross bar being bearingly disposed within each bushing means through the housing apertures with said table leg between said housing, retaining means provided within at least one of said housings and provided for fixing its associated table leg into a predetermined position, said retaining means comprising a pair of sleeves, each of said sleeves having the cross bar disposed therethrough, the first sleeve being rigidly secured to one of said housings and proximate the bushing means, the second sleeve being rigidly secured to the cross bar, engaging means cooperating between the said sleeves and capable of fixing the table leg into a supportive position, said engaging means including a wedging member projecting from one of said sleeves, the mating groove being accommodating of the wedging member for engagement of the said sleeves and fixing of the table leg into its supportive position, a spring surrounding said cross bar and operatively associated with the said sleeves, and said spring normally biasing the wedging member of one sleeve into the groove of the other sleeve and thereby fixing the said leg into its operative supportive position.

4,064,816

DOUBLE SELECT NEEDLE TUFTING MACHINE

Abram N. Spanel, Princeton, N.J.; P. Frank Eiland, Stamford, and David R. Jacobs, New Canaan, both of Conn., assignors to Abram N. Spanel, Princeton, N.J.

Filed June 25, 1976, Ser. No. 700,413

Int. Cl.^{2} D05C *15/16*

U.S. Cl. 112—79 A **7 Claims**

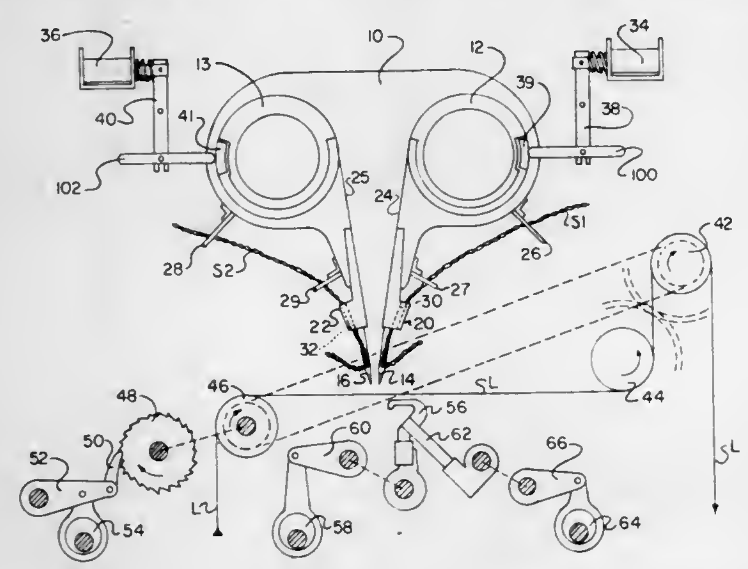

1. A tufting machine or the like including tufting needles for tufting yarn into a backing layer comprising:

an oscillatory member;

flexible band-like members selectively engageable with said oscillatory member and extending to each of said tufting needles; and

restraining means forming tracks for said band-like members to enable said band-like members to effectively impart motion without unwanted flexing to said needles.

4,064,817

PATTERN INDICATOR MECHANISM FOR A SEWING MACHINE

Toshio Sawada; Kimihiko Yamamoto, and Hitoshi Ishikawa, all of Kariya, Japan, assignors to Aisin Seiki Kabushiki Kaisha, Kariya, Japan

Filed Oct. 28, 1976, Ser. No. 736,412

Claims priority, application Japan, Nov. 14, 1975, 50-155665[U]

Int. Cl.^{2} D05B *3/02*

U.S. Cl. 112—158 F **6 Claims**

1. A stitch pattern indicator mechanism for a sewing machine having a pattern selector cam mechanism comprising:

a pattern selector knob rotatably mounted on said machine;

a cam actuating means operatively connected to said pattern selector knob for actuating said pattern selector cam mechanism upon rotation of said pattern selector knob;

a pattern indicator plate having a plurality of pattern symbols illustrated thereon and which is operatively connected to said cam actuating means for indicating a pattern selected by said pattern selector knob; and

a feed length indicator plate operatively connected to said cam actuating means for automatically indicating a feed

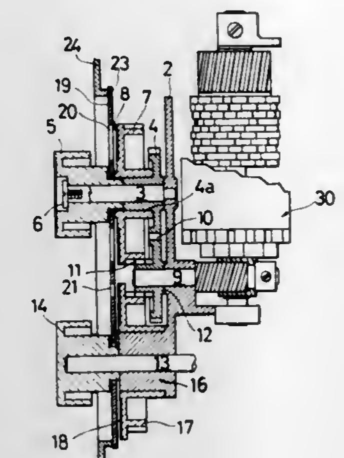

length corresponding to the pattern selected by said pattern selector knob.

4,064,818

SEWING MACHINE BASE

Nerino Marforio, Milan, Italy, assignor to Rockwell-Rimoldi S.p.A., Milan, Italy

Filed Aug. 20, 1976, Ser. No. 716,133

Claims priority, application Italy, Sept. 11, 1975, 27123/75

Int. Cl.^{2} D05B *73/06*

U.S. Cl. 112—258 **1 Claim**

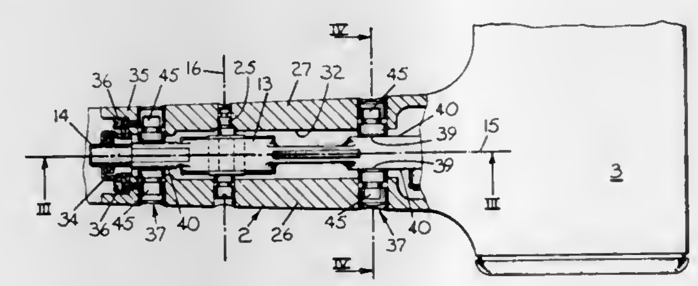

1. In a sewing machine having a base within which at least one feed dog support bar is driven to effect actuation of the machine's feed dog and the advance of a workpiece to the stitch forming instrumentalities, said base comprising:

a. an elongated unitary body member (2) of substantially tubular configuration;

b. guide means (37) assembled in said body member (2) for locating the feed dog support bar in a position parallel with the axis of said body member (2) which includes:

i. a pair of cylindrical elements (38) selectively fixed in aligned seats (41) formed in the opposed side walls of said body member (2); and

ii. an annular seat (42) formed in each of said cylindrical elements (38) with sealing rings (43) assembled therein having a configuration conforming to said seats (41).

4,064,819

MACHINE FOR PROGRESSIVELY CLOSING FLANGES OF CAP STRIPS ON STANDING T-RIB ROOFS

John F. Fox, Riverdale, Ga., assignor to Atlanta Metal Products, Inc., Atlanta, Ga.

Filed Mar. 3, 1977, Ser. No. 774,104

Int. Cl.^{2} B21D *37/00*

U.S. Cl. 113—55 **10 Claims**

1. A machine for progressively closing cap strip side flanges on a standing T-rib comprising a base plate, means on the base plate to guide the machine longitudinally of a standing T-rib, power means on the base plate including a rotary eccentric element, a follower engaging the rotary eccentric element and being reciprocated thereby substantially normal to the base plate, a pair of cap strip side flange closing dies disposed below the base plate in laterally spaced relationship, forward and rear suspension arms for the dies pivoted thereto and also being pivotally mounted relative to the base plate for lateral swinging with the dies so that the dies may assume separated inclined

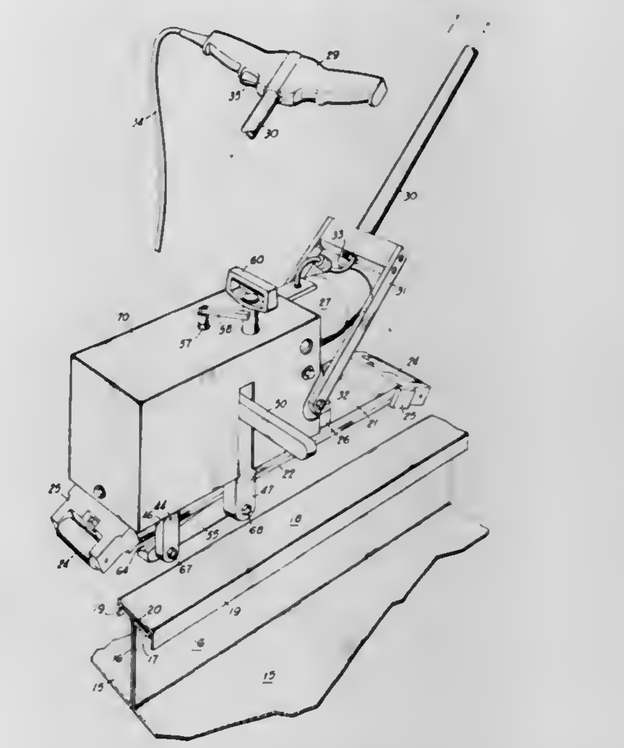

positions and side-by-side substantially vertical positions, and said forward suspension arms being coupled to said follower and reciprocated thereby to cause oscillation of the dies about their rear pivoted ends.

4,064,820

APPARATUS FOR THE MARINE TRANSSHIPMENT OF A LIQUID

Christoph Vogt, Monaco, assignor to Single Buoy Moorings Inc., Fribourg, Switzerland

Filed Nov. 29, 1976, Ser. No. 745,534

Claims priority, application Netherlands, July 30, 1976, 7608513

Int. Cl.^{2} B63B *25/08*

U.S. Cl. 114—74 R **2 Claims**

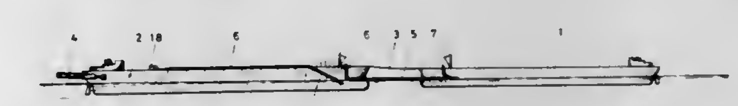

1. Apparatus for the marine transshipment of a liquid, comprising an elongated vessel, a guide track having a horizontal portion extending lengthwise of said vessel to a point near one end of the vessel, the track from said point then having a downwardly inclined portion toward said end of the vessel to at least the water level, a flexible conduit, the guide track being at least about as long as the conduit, means for pulling the conduit lengthwise along the guide track, said means for pulling the conduit along the track comprising a pair of rails on either side of the horizontal section of the track and a trolley movable along said rails, one end of said conduit being connected to said trolley, and means for moving the trolley along the rails, the rails extending beyond said horizontal portion of the track to the end of said vessel, said end of said conduit being pivotally mounted on said trolley for vertical swinging movement about a horizontal axis, so that when said trolley moves beyond said horizontal portion of the track above said inclined portion of the track, said end of said conduit will pivot relative to said trolley.

4,064,821

VARIABLE CAMBER WING SAIL

William C. Roberts, Jr., 1442 39th St., West Palm Beach, Fla. 33407, and Stephen Edmonds, 1160 Coral Way, Riviera Beach, Fla. 33404

Filed Nov. 22, 1976, Ser. No. 744,031

Int. Cl.^{2} B63H *9/06*

U.S. Cl. 114—103 **17 Claims**

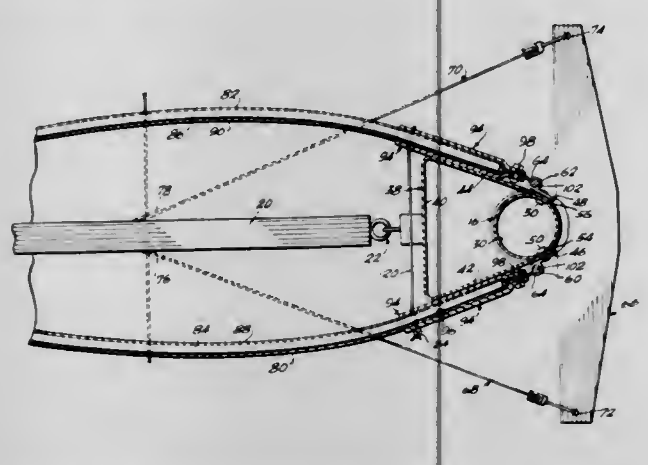

1. A variable camber wing sail and a sailing device including a mast assembly with a lower end, a mast support structure and a boom pivotally connected generally at right angles to the mast assembly adjacent the lower end comprising:

means to mount the mast for rotational movement about its vertical axis to said support structure of the sailing device, said mast assembly including a main, generally vertically extending mast member and an outwardly extending projection comprising a vertically extending rigid beam along the major portion of the mast height, said beam including a trailing end portion,

a sail member positioned relative to the rotatable mast assembly and boom including a main body portion, forward and trailing edges, and a clew corner portion,

a plurality of resiliently deformable struts fixed relative to said sail member along a major portion of their lengths in a spaced apart, generally horizontal, parallel relation, each of said struts including forward and trailing end portions and extending between said forward and trailing sail edges,

means to support said sail member with said struts in a hoisted position relative to said rotatable mast assembly and boom with said sail forward edges and said struts forward end portions engaging said mast assembly and overlying said outwardly extending projection along the mast height, the main lengths of said struts extending outwardly from said mast assembly in cantilever fashion,

said sail member and plurality of struts comprising a first sail assembly, and including a second sail assembly with means to support it in a hoisted position relative to said rotatable mast assembly and boom in a spaced apart relation to said first sail assembly, said second sail assembly including a sail member having a main body portion, forward and trailing edges and a clew corner portion, and a second plurality of resiliently deformable struts, fixed to said second sail member, conforming in all respects to said plurality of said first sail assembly struts,

connection means between said clew corner portions and the boom to permit translation of said clew corner portions relative to the boom while maintaining proper tension forces in the sail between said boom and mast assembly,

a mast assembly rotation control means, including opposed outwardly extending end portions, fixed to said mast, and block and tackle means connecting between said opposed end portions and said boom for selective rotational operation of said mast assembly in either direction to impart a cam action to the plurality of struts by said rigid beam trailing end portion to bend said struts to a degree in direct proportion to the amount of rotation of said mast assembly.

4,064,822

SELF-CONTAINED MOORING SYSTEM FOR A DRILL SHIP

Russell B. Thornburg, Beverly Hills, Calif., assignor to Global Marine, Inc., Los Angeles, Calif.

Filed Sept. 20, 1976, Ser. No. 724,274

Int. Cl.^{2} B63B *21/16*

U.S. Cl. 114—230 **9 Claims**

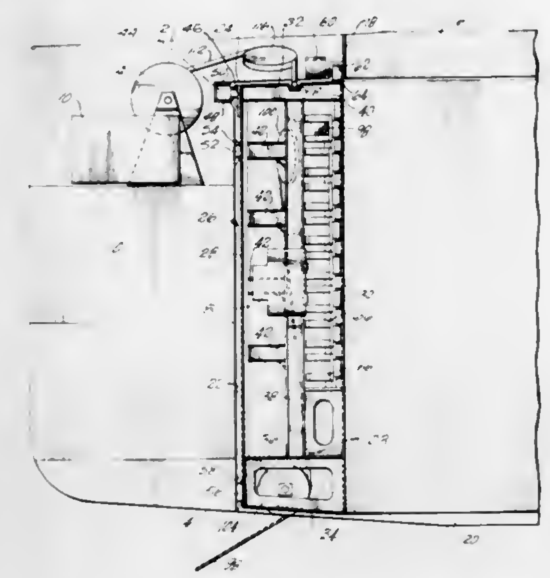

1. A mooring system for a drill ship comprising: a hull having a chamber opening to the sea through the bottom of the hull, an annular structure mounted in the chamber, means rotatably supporting the annular structure from the hull for rotation about a vertical axis, a plurality of coaxially aligned rotatable drums having their axes of revolution coaxial with a common vertical axis, means rotatably supporting the drums from the annular structure for independent rotation of each of the drums about said common vertical axis, drive means supported by the annular structure for rotating the drums individually, anchor cables wound on the respective drums, and cable guide means supported on the annular structure and rotatable therewith for guiding the respective cables from the drums through the opening in the bottom of the hull.

4,064,823

ELECTRIC STARTER INTERLOCK FOR OUTBOARD MOTOR DEVICES

James Richard Draxler, Fond du Lac, Wis., assignor to Brunswick Corporation, Skokie, Ill.

Filed July 28, 1976, Ser. No. 709,448

Int. Cl.^{2} B63H *5/13;* **F02N** *17/00*

U.S. Cl. 115—17 **11 Claims**

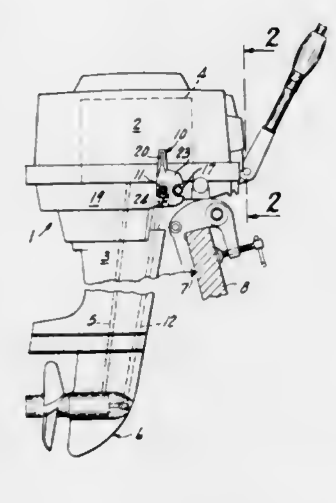

1. A marine propulsion device having an internal combustion engine, an outer enclosure for said engine, a shift mechanism, an electrically operated starter mechanism, a start control switch means having an external operator extending from the enclosure, said switch means controlling energization of the starter mechanism, and a shift lever movably mounted adjacent said external operator and having wall means positioned in overlying relation to said external operator in all positions other than the neutral position to thereby block access to the external operator except when the lever is in the neutral position.

4,064,824

HYDRAULICALLY POWERED MARINE PROPULSION TILTING AND TRIMMING SYSTEM WITH MEMORY

Charles B. Hall, Ingleside, Ill., and Robert F. Young, Kenosha, Wis., assignors to Outboard Marine Corporation, Waukegan, Ill.

Continuation-in-part of Ser. No. 571,077, April 24, 1975, abandoned. This application Mar. 24, 1976, Ser. No. 670,055

Int. Cl.^{2} B63H *5/12*

U.S. Cl. 115—41 HT **24 Claims**

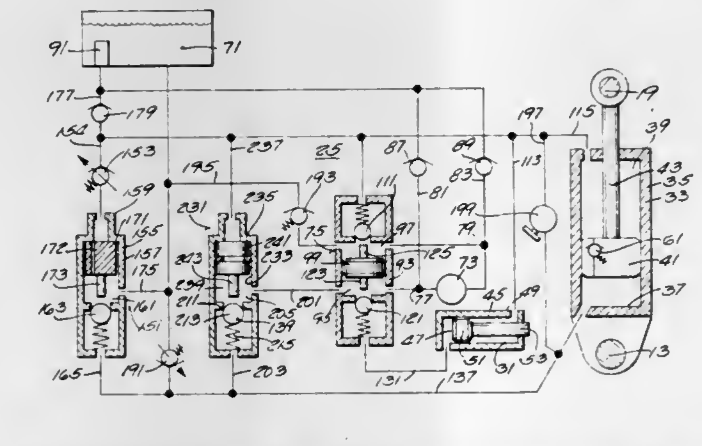

1. A marine propulsion device including a member adapted to be attached to a boat hull, a propulsion assembly pivotally connected to said member for vertical swinging movement when said member is attached to the boat hull, a tilt hydraulic cylinder-piston assembly connected between said member and said propulsion assembly and including a tilt cylinder having opposed first and second ends, a trim hydraulic cylinder-piston assembly including a trim cylinder fixed relative to one of said member and said propulsion assembly, having opposed first and second ends, and having therein a reciprocably movable trim piston having a piston rod extending through one of said ends of said trim cylinder and adapted for releasable engagement with the other of said member and said propulsion assembly, a reversible pump including first and second ports, said pump being operative, when said pump is operating in a first mode, to supply hydraulic fluid under pressure at said first port and to provide suction at said second port and being operative, when said pump is operating in a second mode, to supply hydraulic fluid under pressure at said second port and to provide suction at said first port, first conduit means communicating between said first end of said tilt cylinder and said first pump port and including a first valve biased so as to releasably prevent flow from said first end of said tilt cylinder to said first pump port and so as to permit fluid flow from said first pump port to said first end of said tilt cylinder in response to the presence of hydraulic fluid under pressure at said first pump port, second conduit means communicating between said first end of said trim cylinder and said first pump port independently of said first valve means, said second conduit means including a second valve biased so as to releasably prevent flow from said first end of said trim cylinder to said first port and so as to permit fluid flow from said first pump port to said first end of said trim cylinder in response to the presence of hydraulic fluid under pressure at said first pump port and independently of said first valve means, and third conduit means communicating between said second pump port and said second ends of said trim cylinder and said tilt cylinder.

4,064,825

ALARM DEVICE FOR A CAMPSITE

Steve R. Sly, 828 Vanardol, Clarkston, Wash. 99403

Filed Sept. 13, 1976, Ser. No. 722,784

Int. Cl.^{2} G08B *13/12*

U.S. Cl. 116—81 **1 Claim**

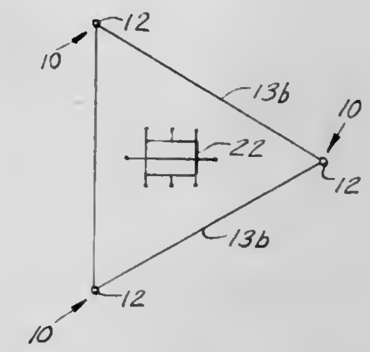

1. An alarm device for a campsite, comprising a plurality of spaced apart tubes, which are placed so as to encompass the campsite, a pair of caps fixedly secured at their end walls to each other, one each of said pair of caps being removably received on one end of said tubes, and a spike, pointed at each end, is fixedly secured within said end walls on the longitudinal axis of each of said pair of caps, one end of said spike being entered into the ground and the other end serving as support and firing pin means for a primer within each of said tubes, and a trip pin is slidably and removably received transversely through an opening near the upper end of said tubes, said trip pins each being secured to an end of a cord on the exterior of said tubes, the opposite end being tied to the outer periphery of the adjacent tube of the plurality of said tubes, and said trip pin abuts against and supports a gravity actuated weight in said tubes until an intruder strikes said cord of said trip pin, said trip pin being removed from the support position of said gravity actuated weight by the cord being pulled by the intruder striking said cord, and said gravity actuated weight descends downwards in said tube and, by inertia means, forcibly urges said primer against the pointed end of said spike within said tube, thus firing said primer, the gases of the explosive report of said primer being discharged through a plurality of radially spaced apart ports through the wall of said tube, which will alert the camper, and a cap is fixedly secured to the upper end of each of said tubes to prevent precipitation from entering the said tubes and said caps fixedly secured to the upper end of each of said tubes, in conjunction with said pair of caps, provides storage means for said gravity actuated weight, said trip pin, said cord and a plurality of said primers when entered into said tubes, and said pair of caps when inverted and replaced on said tube will enclose the portion of said spike within one tube, that is normally entered into the ground.

4,064,826

REFRIGERANT LIQUID INDICATOR

Jude A. Pauli, Florissant, Mo., assignor to Emerson Electric Co., St. Louis, Mo.

Filed May 3, 1976, Ser. No. 682,194

Int. Cl.^{2} F25B *49/00;* **G02B** *7/00*

U.S. Cl. 116—117 C **4 Claims**

4. A sight glass which indicates the difference between a full fluid condition and any fluid condition less than a full condition, comprising:

a body part, said body part having a first opening and a second opening intersecting one another in said body part, the intersection of said openings defining a sight chamber;

a convex lens mounted to said body part along said first opening on a first side of the intersection of said first and said second openings, said lens closing said first opening, said convex lens having a first curved wall directed outwardly of said first opening, and a generally planar wall directed inwardly of said first opening, said convex lens magnifying any bubbles present in said sight chamber; and

closure means mounted to said body part along said first opening on a second side of the intersection of said first and said second openings, said closure means closing said first opening, said closure means having a first wall, said wall having a reflective surface associated with it to reflect light rays through both of said first opening and said

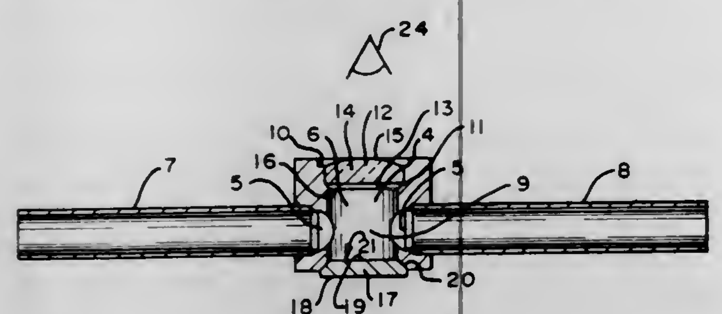

lens means, said reflective surface, said lens means and fluid in said sight glass combining to vary the size of said reflective surface as viewed through side lens means between a first, large size when the sight chamber is full with fluid and a second, relatively smaller size when said sight chamber is in any fluid condition that is less than full.

4,064,827
TEMPERATURE INDICATING DEVICE
Richard E. Darringer, Fullerton, and Robert J. Wrighton, San Gabriel, both of Calif., assignors to Telatemp Corporation, Fullerton, Calif.
Filed Aug. 19, 1976, Ser. No. 716,069
Int. Cl.² A01K *5/70*
U.S. Cl. 116—114 Y **12 Claims**

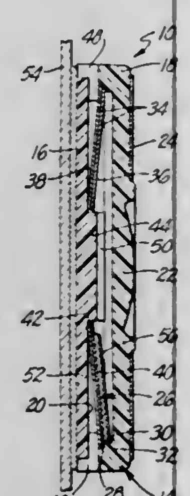

1. A temperature indicating device for use in indicating when the temperature of said device has been changed to a predetermined temperature which comprises:
a housing having an internal cavity and window means for exposing an indicator member located within the interior of said cavity to view from the exterior of said housing,
overcenter toggle spring means for changing from a first configuration to a second configuration by a snap action when the temperature of said spring means is changed to said predetermined temperature located within said cavity,
an indicator member located within said cavity above the bottom of said cavity so as to be physically held by said spring means so as to be visible through said window means against movement when said spring means is in said first configuration,
said spring means in said second configuration being located so that said indicator member is not physically held by said spring means and is free to fall within said cavity so as to no longer be visible through said window means,
means for dislodging said indicator member from said spring means as said spring means moves from said first to said

second configuration, said means for dislodging being located within said housing.

8. A temperature indicating device for use in indicating when the temperature of said device has been changed to a predetermined temperature which comprises:
a housing having an internal disk-shaped cavity having first and second sides and a periphery and window means for exposing an indicator member located within the interior of said housing located adjacent to the center of said first of said sides of said cavity,
snap spring means for rapidly changing from a first configuration to a second configuration when the temperature of said spring means is changed to said predetermined temperature located within said cavity,
said spring means comprising a bimetal disk, the sides of which are located adjacent to the sides of said cavity and the sides of which change in configuration when said spring means is heated to said predetermined temperature,
an indicator member located within said cavity above the bottom of said cavity so as to be physically held by said spring means so as to be visible through said window means against movement when said spring means is in said first configuration,
said spring means in said first configuration holding said indicator member in proximity to said window means,
said spring means in said second configuration being located so that said indicator member is not physically held by said spring means and is free to fall within said cavity so as to no longer be visible through said window means.

4,064,828
FREEZE/THAW INDICATOR
Trevor Percival Clark, 3650 Sunnycrest Drive, North Vancouver, B. C., Canada
Filed Nov. 8, 1976, Ser. No. 740,046
Claims priority, application United Kingdom, Nov. 11, 1975, 46464/75
Int. Cl.² G01D *21/00;* F25B *49/00*
U.S. Cl. 116—114.5 **2 Claims**

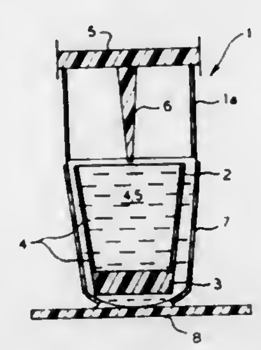

1. A freeze-thaw indicator for evidencing when temperatures in a freezer compartment rise above a pre-determined value comprising:
a. a container having transparent side walls adapted to be placed within the freezer compartments in an upright position,
b. a liquid having pre-determined freezing and thawing temperatures and being formed as an aqueous solution of urea and magnesium chloride containing by weight 0.1 to 0.24 parts magnesium chloride, not less than one part urea and two parts water,
retaining means selectively allowing a float to be immersed in said liquid and retained in a selected position towards the bottom of the container until frozen in the liquid, whereby said float will rise and float in the liquid when the liquid reaches liquid state so as to evidence when ambient temperatures within the compartment have risen above the thawing temperatures of the liquid.

4,064,829
APPARATUS FOR THE PREPARATION OF SEMICONDUCTING PYROPOLYMERIC INORGANIC REFRACTORY OXIDE MATERIALS
George L. Hervert, Woodstock, Ill., assignor to UOP Inc., Des Plaines, Ill.
Continuation-in-part of Ser. No. 596,707, July 17, 1975, Pat. No. 3,997,689. This application Sept. 7, 1976, Ser. No. 721,122
Int. Cl.² C23C *13/08*
U.S. Cl. 118—49.1 **11 Claims**

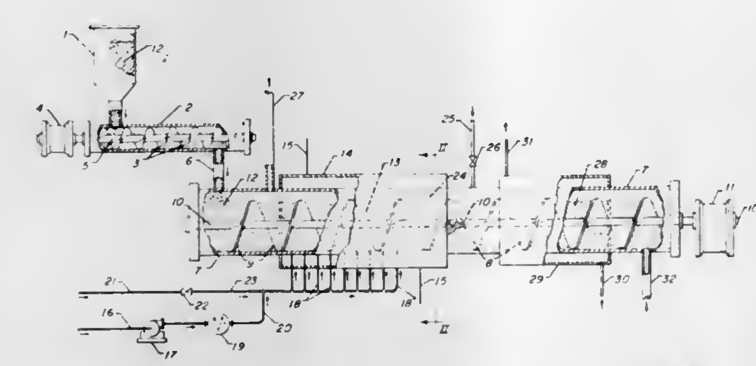

1. A continuous semi-fluidized bed system for preparing a semiconducting carbonaceous pyropolymeric inorganic refractory oxide material which comprises in combination, a horizontally disposed stationary tubular reaction section, means for introducing an inorganic refractory oxide into one end of said reaction section and means for withdrawing carbonaceous pyropolymeric inorganic refractory oxide material from the other end thereof, means for introducing a gaseous hydrocarbon pyropolymeric precursor into said reaction section at horizontally spaced points whereby said inorganic refractory oxide material is maintained in at least a semi-fluidized state during passage through said reaction section, means for withdrawing residual gaseous hydrocarbon, heating means substantially encompassing said reaction section for maintaining a pyrolyzing temperature in said reaction section, and means for maintaining a lateral movement of said contacted inorganic refractory oxide material through said reaction section.

4,064,830
APPARATUS FOR COATING AND DEWEBBING TIRE CORD FABRIC
Edward E. Hunter, Akron, Ohio, assignor to The Goodyear Tire & Rubber Company, Akron, Ohio
Filed June 3, 1976, Ser. No. 695,214
Int. Cl.² B05C *11/06*
U.S. Cl. 118—57 **16 Claims**

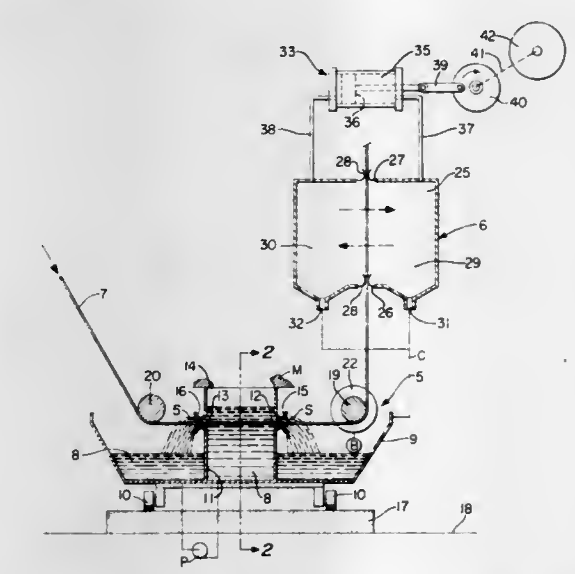

1. An apparatus used in the treatment of plain woven tire cord fabric, comprising:
a. means for contacting tire cord fabric with a liquid coating containing an agent for promoting the bond between cords of the fabric and rubber material used in the production of tires; and
b. means downstream of the fabric contacting means (a) for dewebbing the fabric coated with the liquid coating, said means including:
I. a chamber sealed from the ambient atmosphere;
II. means for guiding the fabric in a vertical plane through the chamber between opposing sides thereof, thereby forming two compartments separated by said fabric;
III. means for alternately circulating fluid, under pressure, to the compartments
and for alternately evacuating fluid from the compartments in correlated relation to the circulation of fluid to the compartments.

10. An apparatus used in the treatment of plain woven tire cord fabric, comprising:
a. means for contacting tire cord fabric with a liquid coating containing an agent for promoting the bond between cords of the fabric and rubber material used in the production of tires, said means including:
I. means for guiding the fabric along a horizontal pathway;
II. a supply tank for holding liquid coating, the tank including a pair of parallel weirs which liquid coating is caused to overflow;
III. a catch basin surrounding the supply tank for catching liquid coating overflowing the weirs and recirculating it to the supply tank;
IV. means for mounting the supply tank and catch basin for unitary movement; and
b. means downstream of the fabric contacting means (a) for dewebbing the fabric.

4,064,831
DEVICE FOR COATING GRANULAR SOLIDS
Kahei Okawara, Shizuoka, Japan, assignor to Ohkawara Mfg., Co., Ltd., Shizuoka, Japan
Filed Feb. 28, 1977, Ser. No. 772,778
Claims priority, application Japan, Feb. 27, 1976, 51-21335
Int. Cl.² B05B *17/00;* B05C *3/08*
U.S. Cl. 118—303 **3 Claims**

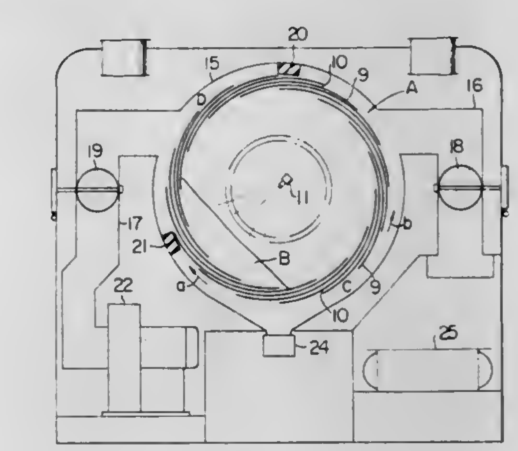

1. A device for coating granular solids comprising
a. a rotary drum including
a cylindrical section consisting of a plurality of overlapping circumferentially arcuated louvers radially spaced apart from each other at a suitable distance, side walls contiguous with said cylindrical section, and at least one rotary shaft extending from one of said side walls;
b. reversible drive means drivingly coupled to said rotary shaft for rotating said rotary drum in either direction,
c. a casing encircling said rotary drum,
d. coating material supply and spraying means for spraying a coating material within said rotary drum,
e. an opening formed through said the other side wall,
f. sealing means air-tightly dividing a space between said rotary drum and said casing into a supply passage and an exhaust passage,

g. a gas supply duct in communication with said supply passage, and
h. a gas exhaust duct in communication with said exhaust passage,

whereby when said rotary drum is rotated in one direction the discharge or escape of charged granular solids to be coated through the passages between the louvers to the exterior may be prevented whereas when the rotary drum is rotated in the other direction, the coated granular solids may be discharged through the passages between the louvers from the interior of said rotary drum.

4,064,832
APPARATUS FOR FABRICATING HEAT-REFLECTING GLASS
Yoshimasa Chujo, Musashino, and Takayoshi Kandachi, Matsusaka, both of Japan, assignors to Central Glass Company, Limited, Ube, Japan
Filed Mar. 29, 1976, Ser. No. 671,433
Claims priority, application Japan, Mar. 29, 1975, 50-38143
Int. Cl.² B05C *5/00, 15/00*
U.S. Cl. 118—323 **5 Claims**

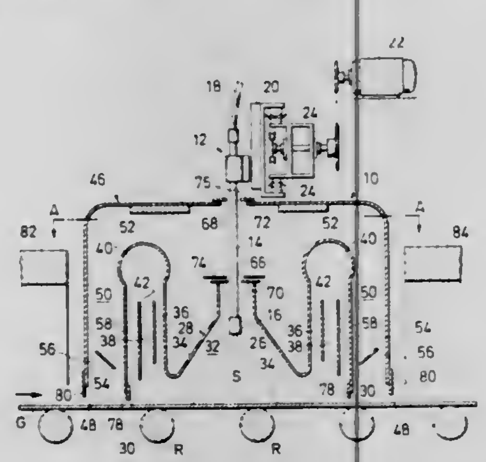

1. An apparatus for fabricating heat-reflecting glass comprising a spraying means supported over a transfer line of a hot elongated glass sheet and reciprocably movable in a transverse direction for spraying a solution of a metal compound onto the upper surface of the glass sheet entering a spraying zone, an inner hood having a downwardly diverging intermediate portion enclosing said spraying zone and upright end portions forming exhaust gas passages on the front and rear sides of said spraying zone for the exhaust gas to be purged from said spraying zone, exhaust ducts leading outwardly from the upper ends of said exhaust gas passages for discharging the exhaust gas therethrough, and an outer enclosure enclosing said inner hood and defining therebetween a heat controlling space thereby maintaining the temperature of said spraying zone at a suitable level and preventing cold air from directly entering said spraying zone, said inner hood and said outer enclosure each having a transverse slot in the top wall thereof for receiving and guiding the transversely reciprocating spraying means.

4,064,833
TONER DENSITY CONTROLLER
Julius Gluck, Noroton Heights, Conn., and Bheema Rao Vijayendran, Berkley Heights, N.J., assignors to Pitney-Bowes, Inc., Stamford, Conn.
Filed Nov. 8, 1976, Ser. No. 739,605
Int. Cl.² B05B *5/00;* **G03G** *13/00*
U.S. Cl. 118—646 **1 Claim**

1. In a toner density controller for determining the density of a development material on a magnetic brush assembly of an electrostatic copier, the combination comprising:
a. a sump;
b. means disposed in said sump for mixing a development material and creating a triboelectric charge in the toner of the development material;
c. a magnetic brush rotatably disposed within said sump;
d. a housing having a window therein which is adjacent said sump;
e. a light source supported by said housing and positioned to direct light through said window;
f. a photocell located in said housing to receive light reflected by development material within said sump;

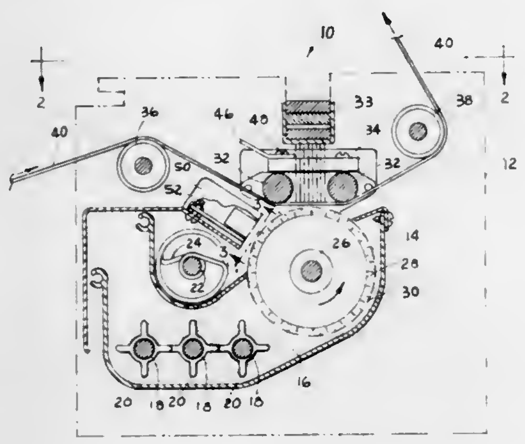

g. an electrode supported by said housing and having an opening which is in registration with said window;
h. means for supplying a charge to said electrode; and
i. means for supplying a charge to said sump which is opposite in polarity to the charge supplied to said electrode.

4,064,834
APPARATUS FOR SENSING THE CONCENTRATION OF TONER IN A DEVELOPER MIX
Joseph T. Sund, Los Angeles, Calif., assignor to A. B. Dick Company, Chicago, Ill.
Filed Nov. 19, 1976, Ser. No. 743,179
Int. Cl.² G03G *15/06*
U.S. Cl. 118—646 **9 Claims**

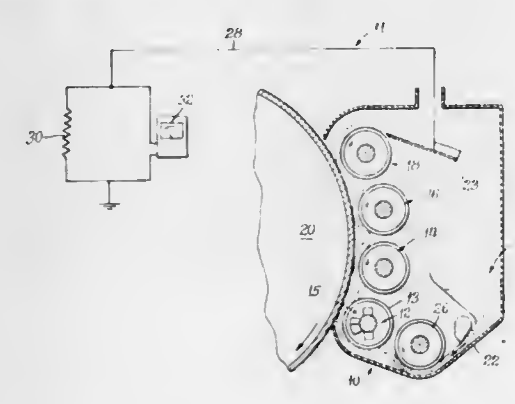

1. Apparatus for sensing the concentration of toner in a developer mix including toner and carrier particles, which is primarily housed in a housing and flows in a path therefrom and back thereto comprising: means including a surface including a material triboelectrically dissimilar from said developer mix over which said developer mix is passed in contact therewith, said surface being electrically isolated from the surrounding apparatus and coupled through an impedance to the housing, and means for sensing the value of triboelectrical current through said impedance generated by the movement of said developer mix over said surface, said current being related to the concentration of toner in said developer mix.

4,064,835
AIR CONDITIONED PET BED
Ludwig Rabenbauer, 1495 Grandville Ave., Pontiac, Mich. 48055
Filed Oct. 6, 1976, Ser. No. 730,227
Int. Cl.² A01K *29/00*
U.S. Cl. 119—1 **1 Claim**

1. An air conditioned pet bed comprising,

a lower portion having sidewalls, end walls and a bottom wall,
an upper portion having a planar perforated top surface and downwardly extending flanges sized to fit closely around said sidewalls and end walls of said lower portion, insulation material lining the interior surfaces of said sidewalls, said endwalls and said bottom wall of said lower portion,

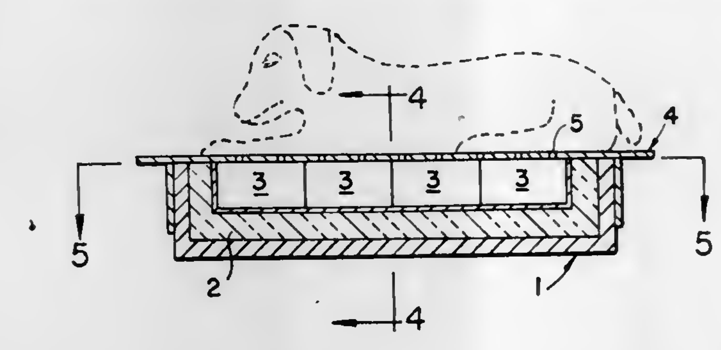

cooling means in the form of re-usable, pre-frozen, chemical ice-packs adapted to fit within said insulated lower portion when covered by said upper portion to provide cooling through said perforations to a pet reclining on said upper surface of said upper portion.

4,064,836
AQUATIC TANK
Jiri Taborsky, R.R. No. 1, Box 430 D-2, Palmetto, Fla. 33561
Filed July 30, 1976, Ser. No. 709,968
Int. Cl.² A01K *63/00*
U.S. Cl. 119—3 **4 Claims**

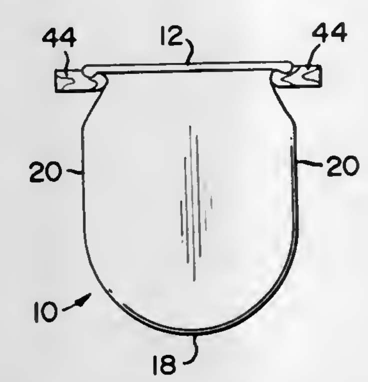

1. An aquatic tank of the type primarily designed to hold marine life therein; comprising in combination:
a frame having a first and a second frame end established adjacent one another with the perimeter of said frame defining a substantially closed frame area;
flexible tank means formed in the shape of a closed bag having a first and a second bag end;
entrance means in said flexible tank means for enabling insertion of said frame into the interior of said tank means,
said first bag end adapted to extend through said closed frame area to coact with said second bag end for forming a two layer aquatic tank with the opening of said aquatic tank being defined by said perimeter of said frame; and
support means adapted for cooperation with said frame to support the aquatic tank relative thereto.

4,064,837
SELF-CONTAINED AQUARIUM SYSTEM
William H. Montgomery, Hayward, Calif., assignor to Aqua Plex Products, San Leandro, Calif.
Filed Nov. 17, 1975, Ser. No. 632,301
Int. Cl.² A01K *63/00*
U.S. Cl. 119—5 **9 Claims**

8. In an aquarium system, a tank for containing water and having a bottom wall and side walls, a dividing wall within the tank forming a main compartment and an equipment compartment within said tank, an opening in said dividing wall adjacent the bottom of the tank, a filter grid disposed in the main compartment of the tank and extending over substantially the entire bottom of the main compartment, primary filtering means carried by the filter grid, a removable filter box having an inlet and outlet for containing secondary filter material, said removable filter box being positioned within said equipment compartment adjacent the bottom of the tank with its inlet in registration with said opening in said dividing wall such that water moving through said opening passes into said removable filter box through said inlet and then through the secondary filter material therein to said outlet, air pump means and air lift

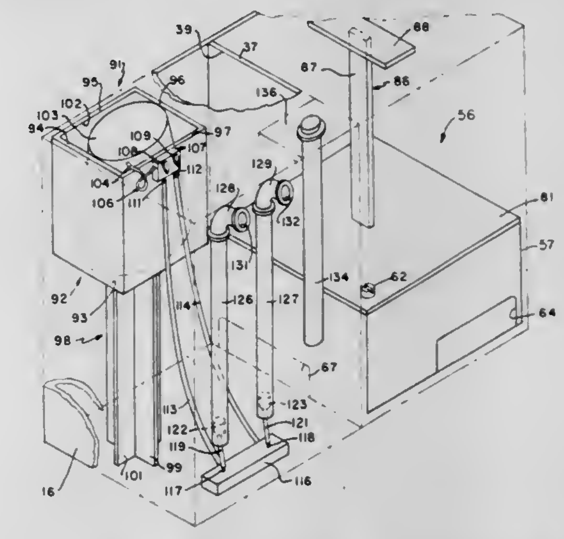

means disposed within said equipment compartment including means establishing fluid communication between said equipment compartment and said main compartment, an air pump compartment for holding said air pump means, said air pump compartment being free of water an having an air opening disposed above the surface of the water which substantially fills both the main compartment and the remainder of the equipment compartment when the tank is substantially filled with water, said air lift means utilizing air from said air pump means for supplying with water from said equipment compartment into said main compartment.

4,064,838
AUTOMATIC MILKING SYSTEMS
Ladislav Mukarovsky; Artur Novak, and Felix Kretschmer, all of Prague, Czechoslovakia, assignors to Ustredni statni veterinarni ustav, Prague, Czechoslovakia
Filed Apr. 29, 1976, Ser. No. 681,686
Claims priority, application Czechoslovakia, Apr. 29, 1975, 2969/75
Int. Cl.² A01J *7/00*
U.S. Cl. 119—14.08 **3 Claims**

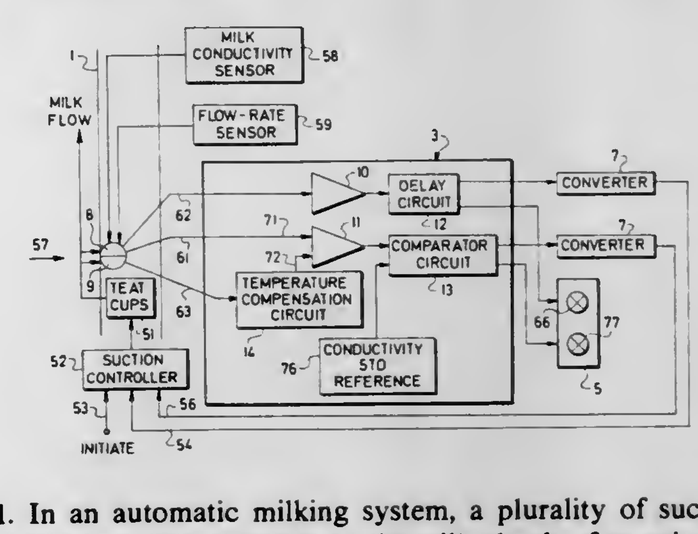

1. In an automatic milking system, a plurality of suction-operated teat cups securable to the milk glands of an animal to be milked, means coupled to the teat cups for initiating suction of the teat cups to start milk flow, detection means associated with the teat cups and rendered effective during the milk flow from the animal for providing a first signal proportional to the

milk flow rate, threshold-operated means for yielding at its output a first control pulse when a signal applied to its input falls below a predetermined value, the duration of said first control pulse corresponding to the period over which said input signal remains below the predetermined value, means for applying the first signal to the input of the threshold means, delay means coupled to the output of the threshold means for inhibiting the passage of the first control pulse from the threshold means when such pulse does not exceed a predetermined interval, first control means coupled to the output of the delay means and rendered effective upon the passage of a delayed first control pulse for terminating the suction of the teat cups, first alarm means coupled to the output of the delay means, the detection means further comprising means rendered effective during the milk flow for individually generating second and third output signals having amplitudes individually proportional to the conductivity of the flowing milk and to the milk temperature, respectively, an operational amplifier having a main input and a correction input, means for applying the second output signal to the main input of the operational amplifier, means for applying the third output signal to the correction input of the operational amplifier, a comparison circuit having first and second inputs and an output exhibiting a second control pulse when the signals applied to the first and second inputs are outside a specified range, means for coupling the output of the operational amplifier to the first input of the comparison circuit, means for coupling a reference signal to the second input of the comparison circuit, and second control means coupled to the output of the comparison circuit and responsive to the generation of the second control pulse for terminating the suction of the teat cups.

4,064,839
AMINATED ANIMAL HABITAT
Donald James Rodemeyer, City Island, N.Y., and John Eugene Hruby, Fairfield, N.J., assignors to Metaframe Corporation, Elmwood Park, N.J.
Filed Feb. 5, 1976, Ser. No. 655,658
Int. Cl.² A01K *1/03*
U.S. Cl. 119—15 **1 Claim**

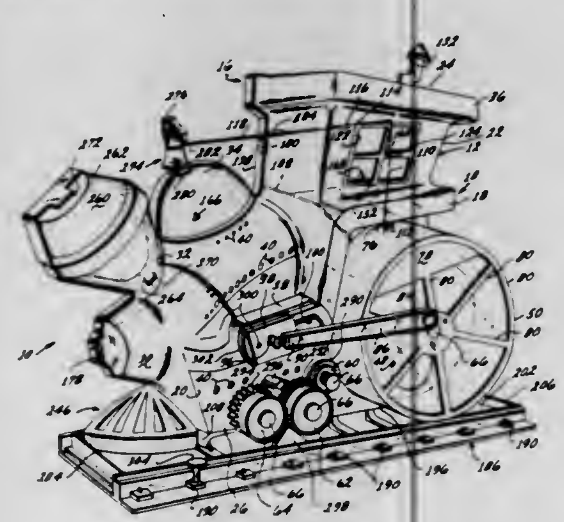

1. In an animal habitat of the type which includes an exercise wheel simulating the drive wheel on a steampowered locomotive, the improvement wherein said habitat includes,
 a tray simulating a railway bed,
 a housing forming an enclosure for housing a pet above said tray, including a pair of cylindrical locking tabs extending across the full width of the bottom of said housing, said tray including a pair of slotted cylindrical channels each engageable by an associated one of said cylindrical locking tabs for maintaining said housing in an upright position on said tray, said housing including a front housing half being molded in bas-relief to simulate said locomotive, said rear housing half being a substantially planar member having a peripheral channel engageable by the peripheral edge of said front housing for forming a channel for urine discharged by an animal in said housing,
 an exercise wheel movably mounted on said habitat and in communication with said housing,
 animating means movably mounted on said habitat,
 and means connecting said animating means to said exercise wheel, whereby movement of said exercise wheel actuates said animating means.

4,064,840
METHOD AND APPARATUS FOR OXIDIZING A FUEL IN AN INTERNAL COMBUSTION ENGINE
Donald E. Vierling, 11309 Toledo Drive, Austin, Tex. 78759
Filed Nov. 26, 1976, Ser. No. 744,981
Int. Cl.² F02B *43/08, 75/12, 33/00*
U.S. Cl. 123—3 **12 Claims**

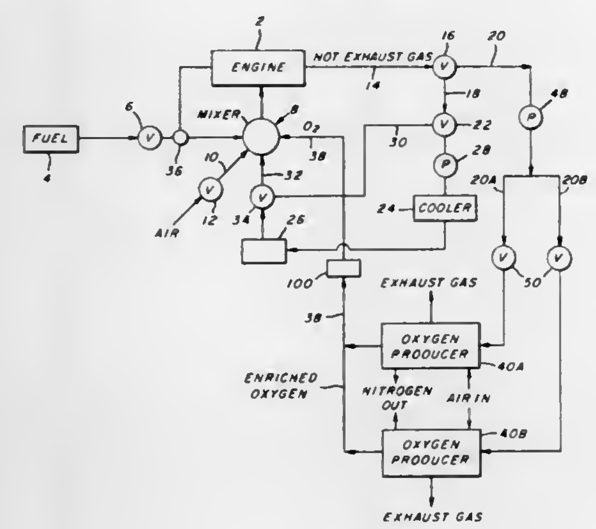

5. In apparatus for substantially oxidizing a fuel in the combustion chamber of an internal combustion engine including a mixer, means for controlling flow of fuel to said mixer, means for controlling flow of air to said mixer, means for controlling flow of engine exhaust gases to said mixer, and means for supplying a controlled amount of oxygen to said mixer: the improvement comprising a plurality of oxygen converters arranged in parallel, each of said converters including an inner chamber adapted to receive a bed of metallic oxide and a heating chamber around said metallic oxide chamber, a first conduit connecting exhaust from said engine to said heating chamber, a second conduit for delivering air to said metallic oxide bed, a third conduit leading from said metallic oxide chamber, a valve in said third conduit, a fourth conduit leading from said valve to the oxygen supply means to said mixer, means for shutting off flow of air to said bed when said metallic oxide has been converted to a higher oxide, and control means for maintaining the temperature of said bed at that which the higher oxide is formed while air is flowing therethrough and then changing said temperature to that at which oxygen is released when it is desired to feed oxygen from said converter to said mixer, said valve being movable from a position where deoxidized air is discharged from the system while air is being fed to the converter to a position where it connects the third and fourth conduits while oxygen is being fed from the converter, whereby one of said converters can be discharged while another converter is being charged.

4,064,841
ROTARY ENGINE
Renaldo V. Jenkins, 1319 Bolton St., Norfolk, Va. 23504, and Alexander P. Sabol, 143 Queens Drive, Williamsburg, Va. 23185
Filed Aug. 18, 1976, Ser. No. 715,608
Int. Cl.² F02B *55/14*
U.S. Cl. 123—8.47 **12 Claims**

1. A rotary engine comprising:
 a drum-like housing having a cylindrical inner surface

bounded at each end by a circular recess extending beyond the circumference of said inner surface,
 the center of said circular recesses being offset from the centerline of said inner surface,
 a flat circular torque plate having an inner and outer face positioned for relative rotative movement in each said circular recess,
 end plates affixed to each end of said housing maintaining said torque plates in position,
 an output shaft extending through said housing having an axis of rotation concentric with said housing circular recesses and fixedly connecting said torque plates to rotate as a unit such that said axis of rotation is more proximate to one location on said housing inner surface than to any other,
 a first plurality of evenly spaced grooves extending radially from the center of said inner face of one of said torque plates,
 a second plurality of evenly spaced grooves extending radially from the center of said inner face of the other of said torque plates, said second plurality of grooves being equal in number to said first and directly opposed thereby,
 a plurality of cylindrical roller vanes extending the length of said inner housing surface and free to turn thereon, each said roller vane having a first end in one of said first plurality of grooves and a second end disposed in said directly opposed groove in the other of said torque plates,
 a cylindrical surface extending the length of said inner hous-

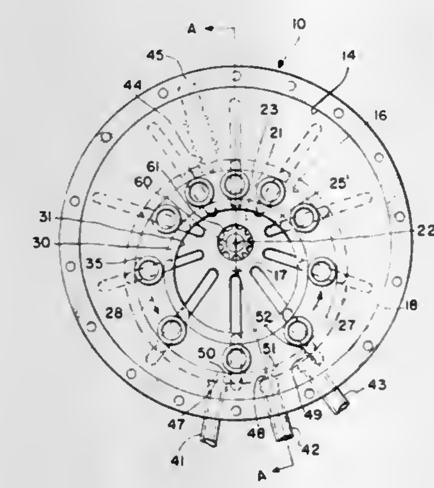

ing surface holding said roller vanes in constant contact thereagainst such that said inner housing surface and said cylindrical surface define respectively an outer and inner race for said roller vanes,
 a slidable rotatable connection between the ends of said roller vanes and said torque plate grooves such that said vanes are freely rotatable against said outer and inner races and translatable along said grooves where said vanes revolve about said inner housing surface and the members of adjacent vane pairs contemporaneously vary in separation between a minimum and a maximum determined by said offset between said axis of rotation of said torque plates and said centerline of said housing inner surface in conjunction with the proximity of each vane to said axis of rotation;
 a plurality of work chambers individually defined by said inner surfaces of said torque plates, said inner and outer races and a pair of adjacent roller vanes, said work chambers having variable individual volumes directly proportional to the separation of the members of said adjacent roller vane pairs;
 a working fluid capable of expansion and contraction;
 means for introducing said working fluid sequentially into each of said work chambers;
 means for rotating said torque plates such that said adjacent roller vanes bounding said work chambers containing said working fluid rotate along said inner housing surface and translate along said torque plate grooves toward said axis of rotation until substantially minimum separation of said adjacent rollers is reached whereby said contained fluid is compressed and, considering said adjacent pairs of roller vanes in the direction of rotation, the leading member of said pair exceeds the trailing member in distance from said axis of rotation;
 means for sequentially expanding said working fluid attaining such compression such that the resulting pressure and the relative position of said vanes to said axis of rotation forces said leading vane away from said trailing vane by continued rotation along said inner housing surface and translation along said torque plate grooves away from said axis of rotation thereby rotating said torque plates and said output shaft by the force of said slidable rotatable connections in said torque plate grooves; and
 means for sequentially returning said work chambers to a condition whereby compression of said contained working fluid is begun anew.

4,064,842
INJECTOR FOR INTRODUCING A LIQUID INTO THE CYLINDERS OF AN INTERNAL COMBUSTION ENGINE
John F. Sherrill, Box L, Plymouth, Ind. 46563
Continuation of Ser. No. 568,978, April 17, 1975, abandoned. This application Dec. 10, 1976, Ser. No. 749,388
Int. Cl.² F02D *19/00*
U.S. Cl. 123—25 L **10 Claims**

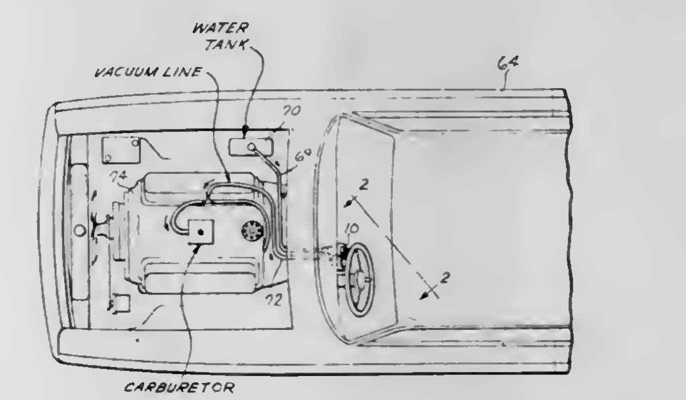

1. An injector used in combination with an internal combustion engine for introducing liquid into the cylinders of said engine, the combination comprising said injector including a housing having a bore therein, said engine cylinders constituting a vacuum source, a liquid inlet and a liquid outlet in said housing communicating with said bore, a piston slidably received within said bore and being shiftable between first and second positions therein in response to the amount of vacuum within said bore, said piston in its first position at a minimum vacuum in said bore and in its second position at a maximum vacuum in said bore, said piston carrying valve means shiftable toward one of said outlet and inlet as said piston shifts into its second position for decreasing the flow rate of liquid through the outlet and away from said one outlet or inlet as said piston shifts into its first position for increasing the flow rate of liquid through the outlet, a liquid source, means placing said liquid source in flow communication with said housing inlet, means placing said housing outlet in flow communication with said vacuum source for producing a vacuum within said bore to cause said liquid to be drawn from the liquid source through said housing and into the vacuum source at a flow rate dependent upon the position of said piston within said bore, said housing including an end wall, said one inlet or outlet in said end wall, said piston having an end face in an opposed relationship to said end wall in all operative positions of said piston within said bore, said valve means located at said end face and being positioned at said one inlet or outlet when said piston is in its second position to define in conjunction with said one inlet or outlet a liquid flow regulating orifice.

4,064,843

FUEL METERING AND INJECTION SYSTEM FOR INTERNAL COMBUSTION ENGINES

Siegfried Holzbaur, Stuttgart, Germany, assignor to Robert Bosch GmbH, Stuttgart, Germany

Filed Sept. 29, 1976, Ser. No. 727,702

Claims priority, application Germany, Sept. 30, 1975, 2543562

Int. Cl.² F02B *3/12*

U.S. Cl. 123—32 EJ **13 Claims**

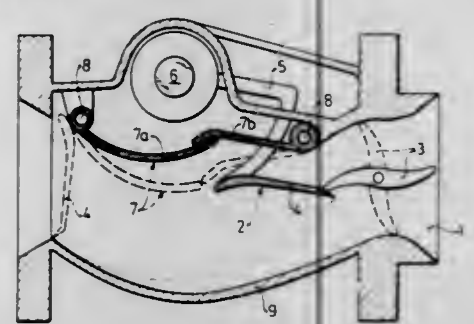

1. In a fuel injection system for internal combustion engines, said system including air flow metering means having a pivotable air flap disposed in the induction tube of the engine, said air flap being pivoted by the forces due to differences of pressure upstream and downstream thereof when the air flow is small and being pivoted by forces due to aerodynamic lift when the air flow is greater, the improvement comprising:

mounting said air flap on a pivotable shaft by means of a connecting bridge which has a flow profile offering substantially minimum resistance to the air flow and in such a manner that the surface defined by said air flap is substantially parallel to and external to said shaft.

4,064,844

APPARATUS AND METHOD FOR SUCCESSIVELY INACTIVATING THE CYLINDERS OF AN ELECTRONICALLY FUEL-INJECTED INTERNAL COMBUSTION ENGINE IN RESPONSE TO SENSED ENGINE LOAD

Junichiro Matsumoto; Haruhiko Iizuka, both of Yokosuka, and Fumiaki Kato, Yokohama, all of Japan, assignors to Nissan Motor Co., Ltd., Yokohama, Japan

Filed Sept. 16, 1976, Ser. No. 724,082

Claims priority, application Japan, Sept. 17, 1975, 50-111703

Int. Cl.² F02B *3/00*

U.S. Cl. 123—32 EA **11 Claims**

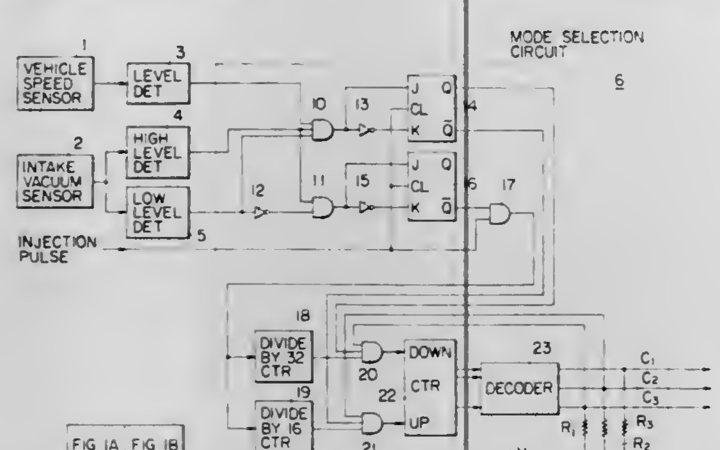

1. Apparatus for controlling the injection of fuel to the cylinders of an electronically fuel injected internal combustion engine mounted on a roadway vehicle having means for generating injection pulses to be applied to the injection unit of each cylinder, comprising:

means for sensing the magnitude of load exerted on said engine;

means for varying the number of active cylinders such that the number of cylinders to be fuel-injected for ignition decreases one at a time when the sensed engine load is below a first predetermined value, increases one at a time when the sensed engine load is above a second predetermined value greater than the first predetermined value and maintains constant when the sensed engine load is between the first and second values; and

means for inhibiting the injection of fuel to one or more cylinders corresponding in number to said number of inactive cylinders.

4,064,845

METERING VALVE FOR PILOT FUEL INJECTION

Hansueli Bart, Whitehall, Mich., assignor to Eaton Corporation, Cleveland, Ohio

Filed Oct. 22, 1975, Ser. No. 625,411

Int. Cl.² F02M *45/02;* **F02D** *1/12*

U.S. Cl. 123—32 G **42 Claims**

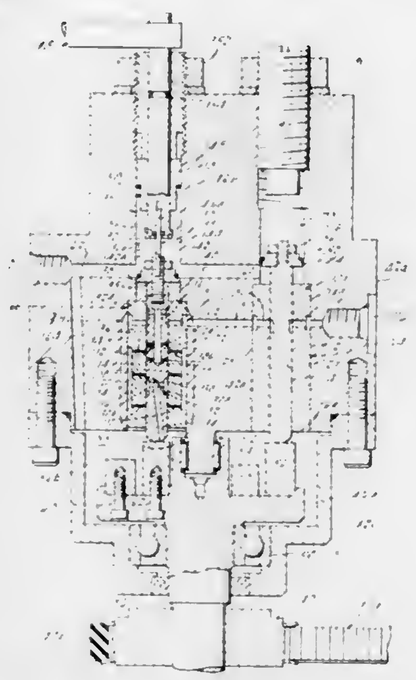

37. A fluid metering valve comprising:

a valve housing having fluid inlet means adapted to be connected to a source of fluid pressure and fluid outlet means;

a valving member disposed for movement in said housing between first and second positions and operative while moving from said second position to said first position to momentarily communicate said inlet means with said outlet means, then momentarily block said communication, and then to again momentarily communicate said inlet means with said outlet means, whereby first and second fluid charges are metered to said outlet means;

first means for moving said valving member from said second position to said first position; and

second means operative to move said valving member from said first position to said second position and then operative to release said valving member and allow said first means to move said valving member at velocities independent of said second means, while said first and second fluid charges are being metered to said outlet.

4,064,846

METHOD AND APPARATUS FOR CONTROLLING AN INTERNAL COMBUSTION ENGINE

Reinhard Latsch, Vaihingen, and Valerio Bianchi, Hochdorf, both of Germany, assignors to Robert Bosch GmbH, Stuttgart, Germany

Filed Feb. 19, 1976, Ser. No. 659,495

Claims priority, application Germany, Feb. 19, 1975, 2507055

Int. Cl.² F02B *3/04*

U.S. Cl. 123—32 EA **19 Claims**

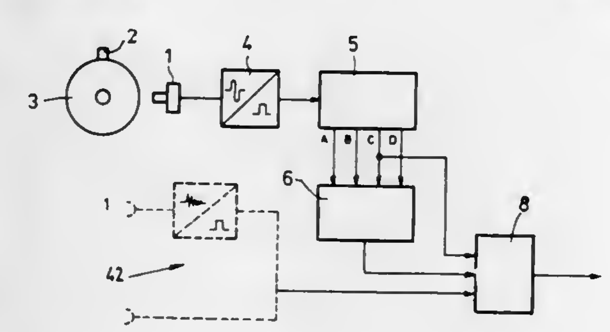

1. A method for controlling an internal combustion engine comprising the steps of

modulating the magnitude of an engine control variable at a frequency locked to the engine speed;

measuring the resultant variation in crankshaft acceleration;

comparing the phase of the modulation with the phase of the resultant crankshaft acceleration;

adjusting the magnitude of an engine control variable according to said comparison of phase.

4,064,847

FUEL INJECTION SYSTEM FOR INTERNAL COMBUSTION ENGINES

Siegfried Holzbaur, Stuttgart, and Horst Barth, Asperg, both of Germany, assignors to Robert Bosch GmbH, Stuttgart, Germany

Filed Oct. 7, 1976, Ser. No. 730,615

Claims priority, application Germany, Oct. 17, 1975, 2546560

Int. Cl.² F02B *3/12*

U.S. Cl. 123—32 EJ **14 Claims**

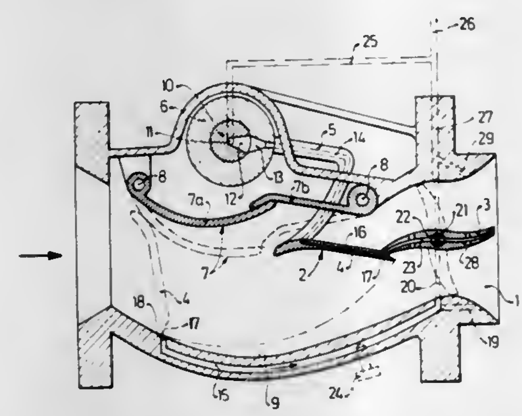

1. A fuel injection system for internal combustion engines, including means for injecting fuel into the air induction tube of the engine at a location upstream of the main throttle valve, the improvement comprising means for delivering a quantity of fuel for engine idling to a location in said induction tube lying downstream of the said main throttle valve.

4,064,848

EQUALIZATION TANK FOR COOLING LIQUID

Rolf Pabst, Neuhausen, and Siegfried Jenz, Illingen, both of Germany, assignors to Daimler-Benz Aktiengesellschaft and Suddeutsche Kuhlerfabrik Julius Fr. Behr, both of, Germany

Filed Aug. 1, 1975, Ser. No. 601,330

Claims priority, application Germany, Aug. 3, 1974, 2437502

Int. Cl.² F01P *3/22*

U.S. Cl. 123—41.54 **19 Claims**

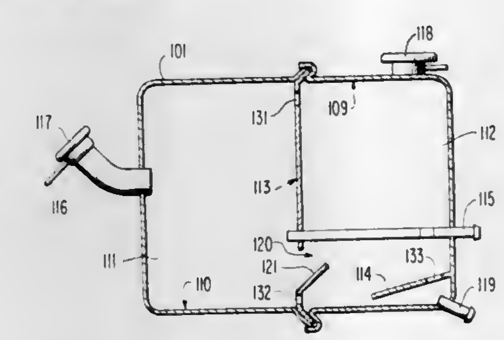

6. An equalization tank for volume equalization and air separation of a liquid heat carrier flowing through a circulating system, especially for a circulatory system for combustion engine cooling spaces and the like, comprising:

separation chamber means,

air chamber space means arranged above said separation chamber means,

venting means communicating the air chamber space means and the separation chamber means for accommodating escape of entrapped air from the liquid flowing through the separation chamber means to the air chamber space means,

the separation chamber means being constructed and arranged to form liquid-air separating means and including a plurality of separate separation chambers, a first of the separation chambers including an inlet portion coupled with a separation flow entrance leading from the circulating system and an outlet portion coupled direcly with a second of the separation chambers, the outlet portion being constructed and arranged to permit passage therethrough of at least a substantial portion of the flow of liquid through the first separation chamber to the second separation chamber,

the outlet portion being provided with a connection means for liquid enriched with bubbles between the first separation chamber and the second separation chamber and a connection means for liquid low in bubbles between the first separation chamber and the second separation chamber, the connection means for liquid enriched with bubbles being located geodetically between the connection means for liquid low in bubbles and the air chamber space means.

4,064,849

INTERNAL COMBUSTION ENGINE

Takashi Nagasawa, Miura, Japan, assignor to Nissan Motor Co., Ltd., Yokohama, Japan

Filed Jan. 15, 1975, Ser. No. 541,105

Claims priority, application Japan, Jan. 17, 1974, 49-8243

Int. Cl.² F02B *17/00;* **F01L** *3/22*

U.S. Cl. 123—75 B **3 Claims**

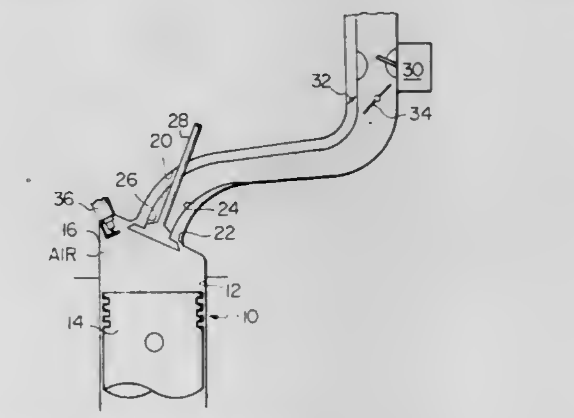

1. In an internal combustion engine

a cylinder;

a reciprocating piston in said cylinder;

a cylinder head closing one end of said cylinder, said reciprocating piston and said cylinder head cooperating to form in said cylinder a combustion chamber;

said cylinder head having an air intake port opening directly into said cylinder;

an air intake passageway terminating at said air intake port for admitting air into said cylinder through said air intake port;

said cylinder head having a combustible mixture intake port opening directly into said cylinder, said combustible mixture intake port being disposed in said air intake passageway and radially inwardly of said air intake port;

a combustible mixture intake passageway terminating at said combustible mixture intake port for admitting a combustible mixture into said cylinder through said combustible mixture intake port; and

an intake valve having a valve stem and valve head, said intake valve being reciprocable mounted in said cylinder head, said valve head closing said air intake port when said intake valve is in a closed position, said valve head having a portion constructed and arranged so as to be received in said combustible mixture intake passageway to close said combustible mixture intake port until said valve head is spaced from said air intake port by a predetermined amount, said portion of said valve head opening said combustible mixture intake port when said valve head is spaced from said air intake port beyond said predetermined amount, said valve head being positioned when said intake valve is in open positions to direct air from said air intake port toward walls of said cylinder to form an air film in areas adjacent the cylinder walls and a crown of said piston, this air film embracing the combustible mix-

ture after it is emitted from said combustible mixture intake port.

4,064,850
INTERNAL COMBUSTION ENGINE WITH MAIN AND AUXILIARY COMBUSTION CHAMBERS
Yasuhiko Nakagawa, Fujisawa; Masahiro Sasaki; Teruyuki Ito, both of Yokohama, and Tosimitu Matuoka, Yokosuka, all of Japan, assignors to Nissan Motor Co., Ltd., Yokohama, Japan
Filed Jan. 16, 1976, Ser. No. 649,596
Claims priority, application Japan, Jan. 17, 1975, 50-7002
Int. Cl.² F02B *19/10*
U.S. Cl. 123—75 B 19 Claims

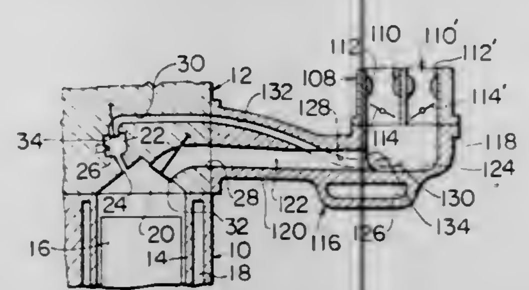

1. An air-fuel mixture induction system for an automotive multiple-cylinder internal combustion engine having main and auxiliary combustion chambers for each of the engine cylinders and combined with a carburetor having a throttle valve, comprising main mixture delivery passageway means having internal wall portions formed with intake ports respectively in communication with the main combustion chambers of the cylinders and an intake manifold consisting of a main tube portion having an internal space communicating with the carburetor downstream of the throttle valve and runner portions branched from said main tube portion and formed with passageways communicating upstream with said internal space in said main tube portion and downstream with said intake ports, and auxiliary passageways each providing communication between each of the auxiliary combustion chambers and said internal space in said main tube portion through an opening in at least one of said internal wall portions.

4,064,851
SERVO CONTROLLED EXHAUST GAS RECYCLE SYSTEM
Wolf Wessel, Oberriexingen, Germany, assignor to Robert Bosch GmbH, Stuttgart, Germany
Filed Aug. 12, 1976, Ser. No. 713,855
Claims priority, application Germany, Sept. 5, 1975, 2539484
Int. Cl.² F02M *25/06*
U.S. Cl. 123—119 B 11 Claims

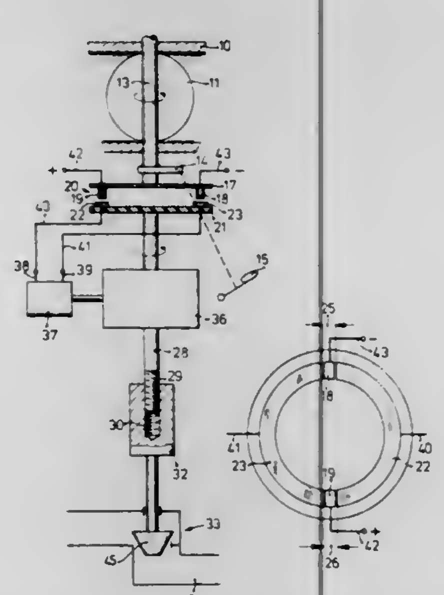

1. In an exhaust recycle system for an internal combustion engine, said system including adjustable valve means adapted to be opened and closed in accordance with the position of the throttle of the engine, the improvement comprising switch means, composed of two complementary switch parts, the first of said switch parts being attached to and moving with said valve means and the second of said complementary switch parts being attached to and moving with said throttle; whereby the cooperation of said first and second switch parts provides a switching action for opening and closing said adjustable valve means.

4,064,852
MICROWAVE ENERGY APPARATUS AND METHOD FOR INTERNAL COMBUSTION ENGINES
Hal Fulenwider, Jr., P.O. Box 971, Palm Beach, Fla. 33480
Continuation of Ser. No. 629,374, Nov. 6, 1975, abandoned. This application Mar. 3, 1977, Ser. No. 774,167
Int. Cl.² F02M *27/04*
U.S. Cl. 123—119 E 12 Claims

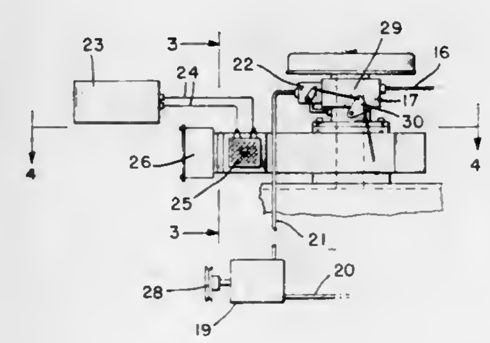

1. A device for vaporizing and heating liquid in combination with an internal combustion engine having inlet means to cylinders for combustion comprising means for supplying liquid to said inlet means, and microwave generating means for subjecting said liquid to microwave energy to volatilize and heat said liquid for combustion prior to entry by said liquid into said cylinders, substantially L shaped wave guide means for directing said microwave energy from said generating means to said inlet means and for dissipating excess microwave energy.

4,064,853
INTERNAL COMBUSTION ENGINE WITH A PRESSURE-COMPENSATING ARRANGEMENT IN THE CRANKCASE OF THE ENGINE
Ernst Hatz, Ruhstorf, Germany, assignor to Motorenfabrik Hatz GmbH & Co. KG, Ruhstorf, Germany
Filed Aug. 9, 1976, Ser. No. 712,779
Claims priority, application Germany, Aug. 12, 1975, 2535950
Int. Cl.² F02M *25/06*
U.S. Cl. 123—119 B 6 Claims

1. An arrangement for compensating the pressure in a crankcase of an internal combustion engine, comprising:

conduit means for providing a fluid connection between said crankcase and a suction pipe for said engine, said conduit means including an operating chamber separate from said fluid connection and auxiliary conduit means for connecting said operating chamber to atmospheric pressure, said operating chamber being directly formed in said fluid connection;

bypass passageway means for providing passage of a fluid from said crankcase to said suction pipe around said operating chamber, said bypass passageway means comprising tubular jacket means enclosing and being spaced from said fluid connection along the length of said operating chamber; and

a shut-off member mounted in said operating chamber and adapted to make or interrupt the connection between said

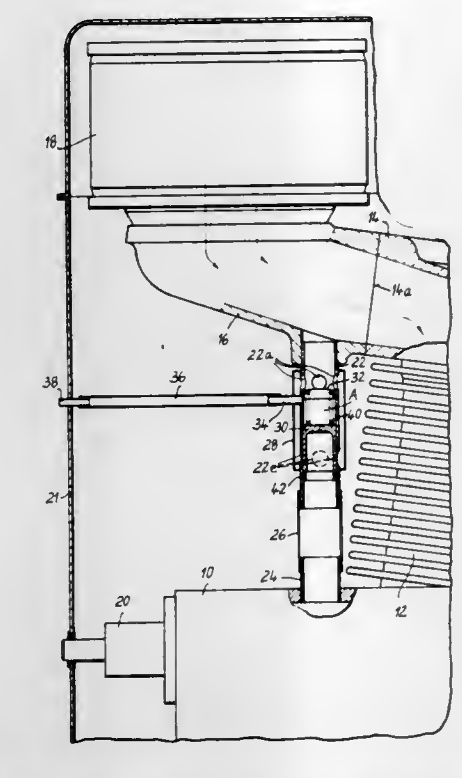

crankcase and said suction pipe through said fluid connection and said bypass passageway means.

4,064,854
AIR VALVE FOR A FUEL INJECTION SYSTEM
Siegfried Fehrenbach, Markgroningen, and Alfred Feuerbacher, Schwieberdingen, both of Germany, assignors to Robert Bosch GmbH, Stuttgart, Germany
Filed Nov. 2, 1976, Ser. No. 737,934
Claims priority, application Germany, Nov. 15, 1975, 2551340
Int. Cl.² F02M *69/00, 39/00, 7/00*
U.S. Cl. 123—139 AW 8 Claims

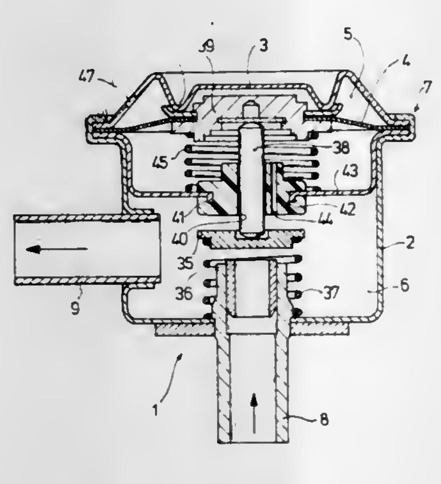

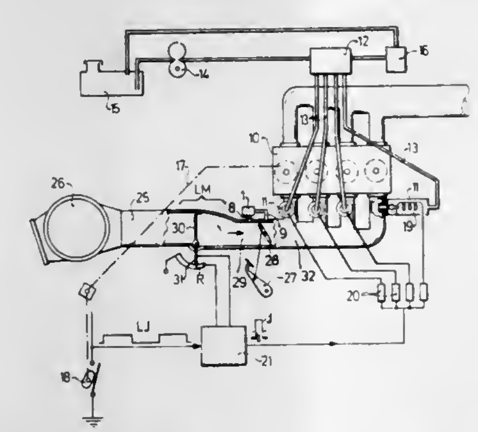

1. An air valve for a fuel injection system of a mixture-compressing externally ignited internal combustion engine, the system comprising: a suction tube into which fuel is injected and within which an air metering member and an arbitrarily displaceable throttle valve are mounted in succession in the direction of air flow; and a bypass line connecting together the sections of the suction tube upstream and downstream of the throttle valve, wherein the cross section of the bypass line is varied by means of an air valve, the air valve comprising:

a. a housing;
b. a membrane within the housing and dividing the space within the housing into a first and second chamber;
c. a movable valve component mounted to control the cross-sectional area of the bypass;
d. a guide plate;
e. a connecting member guided by the guide plate and connecting the membrane to the movable valve component;
f. a guide spring mounted to bias the movable valve component in an open direction;
g. a first line; and
h. pressure spring situated in the second chamber, wherein:
   i. the first chamber communicates with atmosphere;
   ii. the second chamber communicates with the suction tube section upstream of the throttle valve via the first line;
   iii. the first line is closable by the movable valve component; and
   iv. the membrane is concurrently acted upon by the guide spring via the movable valve component and by the pressure spring.

4,064,855
PRESSURE RELIEF AT FUEL INJECTION VALVE UPON TERMINATION OF INJECTION
Lloyd E. Johnson, 700 Highview Road, East Peoria, Ill. 61611
Filed Feb. 17, 1976, Ser. No. 658,252
Int. Cl.² F02M *51/06*
U.S. Cl. 123—139 DP 19 Claims

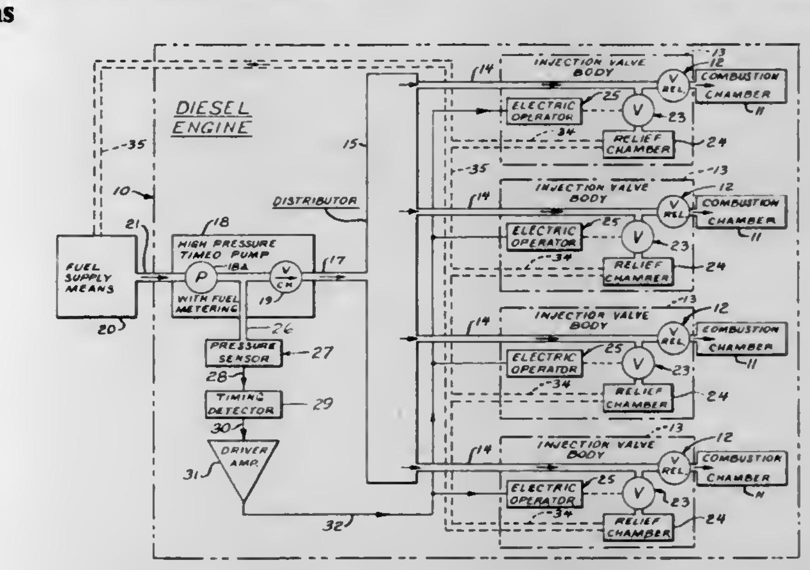

1. In a fuel injection apparatus for an internal combustion engine having a combustion chamber, said apparatus including a fuel injection valve having a downstream side through which fuel is injected into said chamber and an upstream side, fuel pulse supply means connected to said upstream side for supplying metered and timed pulses of fuel to said valve for injection into said chamber, said pulses each having a start and an end, the improvement comprising:

a normally closed relief valve having an intake opening communicating with the upstream side of the injection valve and a discharge opening;

power means connected to the relief valve for opening the relief valve to permit communication between the intake and discharge openings in timed relationship to arrival at the injection valve of said ends of pulses of fuel flow; and

means communicating with said discharge openings to receive fuel that may flow from the intake to the discharge openings when the relief valve is open.

4,064,856
CONTROL MECHANISM FOR INJECTION PUMP
Ulrich Augustin, Stuttgart, Germany, assignor to Daimler-Benz Aktiengesellschaft, Germany
Continuation of Ser. No. 469,451, May 13, 1974, abandoned. This application July 19, 1976, Ser. No. 706,296
Claims priority, application Germany, May 15, 1973, 2324419; May 15, 1974, 2401727
Int. Cl.² F02M *39/00*
U.S. Cl. 123—140 R **86 Claims**

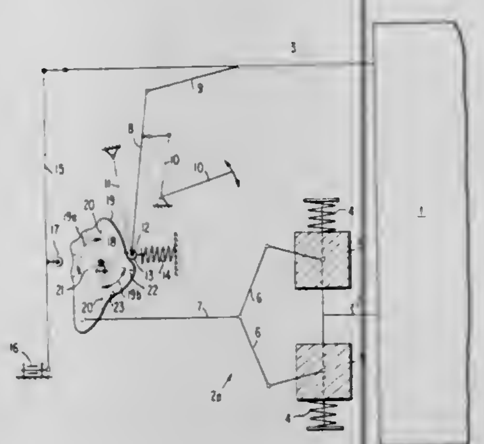

1. In an internal combustion engine having a predetermined operating range and an injection pump which supplies fuel to said engine over said operating range, a control mechanism for controlling said injection pump, said control mechanism comprising:

a control rod member axially displaceable in the injection pump for directly varying the injection quantity of said pump as a function of the position of said control rod member,

a freely movable injection pump adjusting lever,

means for connecting the control rod member with said adjusting lever,

an arbitrarily operable fuel quantity lever,

means for connecting said fuel quantity lever to said adjusting lever,

speed responsive governor means including a governor member movable as a function of the speed of an internal combustion engine,

movable cam means defining first and second linear cam surfaces,

a motion connecting means interposed between said cam means and said movable governor member for moving said cam means in response to the movement of said governor member,

a first cam follower selectively engageable with a first of the linear cam surfaces,

a second cam follower relatively engageable with a second of the linear cam surfaces,

means for mounting said first cam follower to said adjusting lever at a fixed location such that the position of said adjusting lever controls the position of said control rod member in response to the position of the cam means over a first portion of the operating range of said engine,

means for mounting said second cam follower to said control rod member such that when said second cam follower contacts said cam means over a second portion of the operating range of said engine, a displacement of said control rod member in a direction permitting higher quantities of fuel to be injected in the engine is blocked,

said means for mounting said first cam follower to said adjusting lever, said means for mounting said second cam follower to said control rod member, said means for connecting said control rod member with said adjusting lever, and said means for connecting said fuel quantity lever to said adjusting lever being arranged with respect to one another so that in each case only one of said first cam follower and said second cam follower respectively contact their associated cam surfaces with the respective cam followers being alternatingly mutually disengageable from their associated cam surfaces.

4,064,857
IRIS THROTTLE ADAPTOR
David R. Williams, Savannah, Ga., assignor to William O. Plunkett and Robert E. Reavis, both of Savannah, Ga., part interest to each
Filed Apr. 22, 1976, Ser. No. 679,312
Int. Cl.² F02M *29/00*
U.S. Cl. 123—141 **11 Claims**

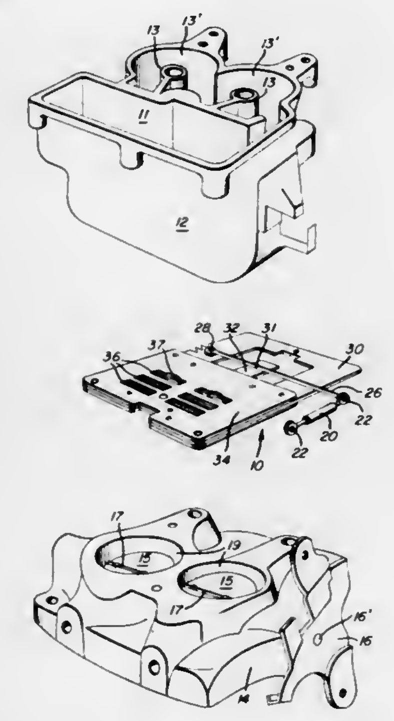

1. In a carburetor having a liquid gasoline containing chamber, an air passageway, an atomizing venturi in said air passageway and connected to the gasoline chamber for the induction of gasoline thereinto by the passage of inducted air through the passageway, the improvement comprising; a throttle structure for association with the air passageway to control the gasoline particles and air passing into the manifold of the internal combustion engine with which the carburetor is used, actuating linkage between the conventional carburetor actuating mechanism and said throttle structure, and said throttle structure including means to effect additional atomization of the gasoline and further breaking up of the suspended gasoline particles as already atomized by the carburetor venturi, the throttle structure is mounted in place of the conventional throttle disk structure, and the throttle structure includes a flat main support plate having at least three apertures therein, a single flat slidably movable throttle plate with apertures therethrough, and means on the slidably movable throttle plate for actuation by the connection to the caburetor actuating mechanism, the means on the slidably movable throttle plate for actuation thereof includes a pivotal lever appropriately mounted on the first said plate by a replaceable pivot block mounted in one of said three apertures, said pivotal lever having a slot therein, and a pin connection between the slot and the throttle plate.

4,064,858
IGNITION SYSTEM WITH MULTIPLEX DISTRIBUTOR FOR ENGINES
Louis Forde, 482 Berriman St., Brooklyn, N.Y. 11208
Continuation-in-part of Ser. No. 665,125, Aug. 5, 1976, abandoned, which is a continuation-in-part of Ser. No. 482,232, June 24, 1974, abandoned. This application Dec. 13, 1976, Ser. No. 750,274
Int. Cl.² F02P *1/00, 5/04;* **H01H** *29/16*
U.S. Cl. 123—148 DS **12 Claims**

1. An ignition system for a multi-cylinder internal combustion engine comprising in combination, a driving shaft, a plurality of rotatable cam means mounted on said shaft in an axially spaced arrangement, each of said cam means having a number of lobes for actuating one of a plurality of substantially identical and concurrently operable circuit breaker assemblies disposed in an axially spaced arrangement, each said circuit breaker assemblies including an actuating cam follower, all of said cam followers being pivoted about the same pivot arm, said pivot arm being affixed to a common ground plate and each of said cam followers engaging a respective one of said cams, a multi-level distributor cover means having at least one terminal contact disposed on each level, a multi level rotor mounted on said driving shaft and rotating within said distributor cover means, a plurality of ignition coils having primary

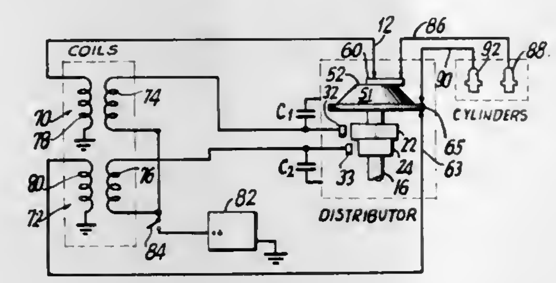

and secondary windings, said ignition coils corresponding in number to the number of levels of said multi-level rotor and said primary windings being connected to a respective one of said breaker assemblies at one end and to a power source at the other end, said multi-level rotor including an input connection for each level connected to a respective one of said secondary windings, each level of said multi-level rotor having an axially spaced and axially aligned output connection tip, said output connection tips having a different radius for each level and connecting the input of each rotor level with said at least one contact on the corresponding level of the multi-level distributor cover means, said contacts being connected to the engine spark plugs.

4,064,859
SEMICONDUCTOR IGNITION SYSTEM
Seiichi Kashiwazaki, Naka, Japan, assignor to Hitachi, Ltd., Japan
Filed Jan. 20, 1976, Ser. No. 650,766
Claims priority, application Japan, Jan. 20, 1975, 50-7746
Int. Cl.² F02P *9/00, 7/06, 5/08*
U.S. Cl. 123—148 E **12 Claims**

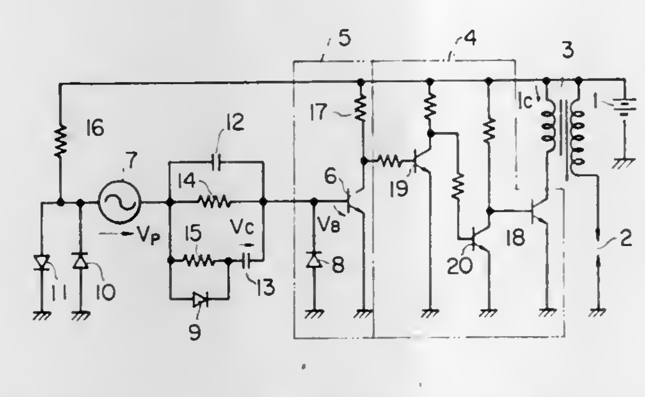

1. A semiconductor ignition system comprising:

an ignition coil having a primary winding and a secondary winding;

spark plugs;

a first connection means to connect the secondary coil of said ignition coil to said spark plugs;

a first transistor having emitter, collector and base electrodes;

a second connection means which connects the emitter and collector electrodes of said first transistor to the primary coil of the ignition coil and to a d-c current supply means in series;

a pick-up coil which generates a-c signals in synchronism with the revolution of the engine;

a second transistor which detects the output of said pick-up coil; and

a switching means which supplies current to the base of said first transistor responsive to the output of said second transistor, for the purpose that the primary current of the ignition coil is controlled responsive to the output of said pick-up coil so that a high voltage which will be fed to said spark plugs is generated on the secondary winding;

the improvement characterized by a parallel circuit of a resistor and a diode, a capacitor connected in series with the parallel circuit and means for connecting said series circuit of said parallel circuit and said capacitor to said pick-up coil and the base of said second transistor.

4,064,860
SPARK-IGNITION ENGINE FOR LEAN AIR-FUEL MIXTURE
Takashi Kato, Susono, Japan, assignor to Toyota Jidosha Kogyo Kabushiki Kaisha, Toyota, Japan
Filed Dec. 31, 1975, Ser. No. 645,814
Int. Cl.² F02B *19/12, 19/18*
U.S. Cl. 123—191 S **11 Claims**

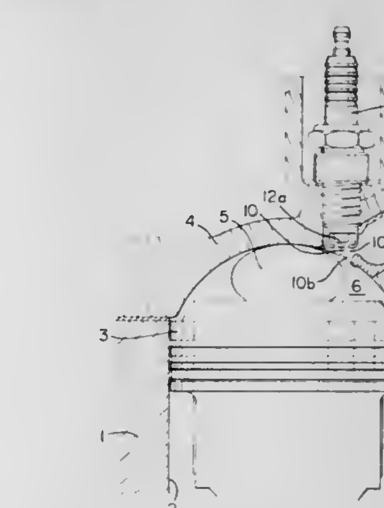

1. In a spark-ignition-type internal combustion engine having a main combustion chamber equipped with an intake valve for an air-fuel mixture, an auxiliary combustion chamber, a transfer passage interconnecting said main combustion chamber with said auxiliary combustion chamber, and a spark plug associated with the transfer passage, the spark plug having an annular threaded portion mounted in a wall defining the transfer passage so that the spark plug electrodes project into said passage, whereby the air-fuel mixture is forced during the compression stroke from the main combustion chamber into the auxiliary combustion chamber and is ignited by the spark plug electrodes, the combustion gas in the auxiliary combustion chamber is injected through said passage into the main combustion chamber, and thus the air-fuel mixture in the main combustion chamber is quickly ignited and combusted, comprising the improvement wherein said transfer passage has a first passage portion of enlarged cross-sectional area and at least one additional passage portion of a smaller cross-sectional area, said electrodes being positioned in said first portion of said transfer passage, and said first portion having a length as measured in the flow direction of the passage which is greater than the outside diameter of the threaded portion of the spark plug.

4,064,861
DUAL DISPLACEMENT ENGINE
William J. Schulz, R-239, West Cornwall, Conn. 06796
Filed Aug. 10, 1976, Ser. No. 713,106
Int. Cl.² F02D *13/06*
U.S. Cl. 123—198 F **9 Claims**

1. An apparatus for disabling at least one selected cylinder of

a conventional four cycle, multi-cylinder, internal combustion engine under light load conditions in order to effect operational economy, said apparatus comprising:
auxiliary valve means located in an intake manifold leading to each selected cylinder;
valve lock-up means acting on an exhaust valve of each selected cylinder to lock said exhaust valve in an open condition, said lock-up means comprising a solenoid having a piston rod, a linkage assembly one end of which is

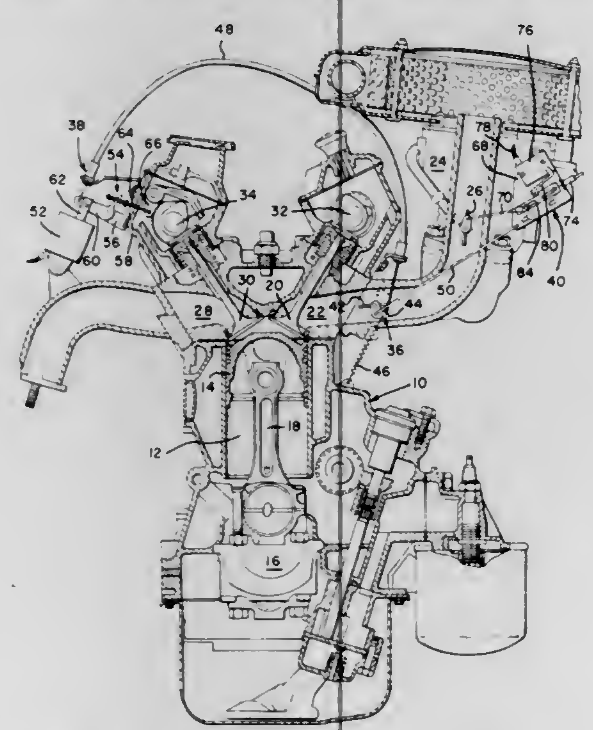

attached to said piston rod and the other end of which is movable out of and into a position in which said exhaust valve is held open; and
control means responsive to actuation of an accelerator and means connecting said control means to said auxiliary valve means and said solenoid for controlling operation of said auxiliary valve means and said exhaust valve lock-up means whereby, under low load conditions, said selected cylinder is disabled by closure of said auxiliary valve and locking open said exhaust valve.

4,064,862
COMPOUND BOW
Norman Arlo Groner, Kalkaska, Mich., assignor to Victor United, Inc., Chicago, Ill.
Filed Mar. 31, 1976, Ser. No. 672,150
Int. Cl.² F41B *5/00*
U.S. Cl. 124—23 R **10 Claims**

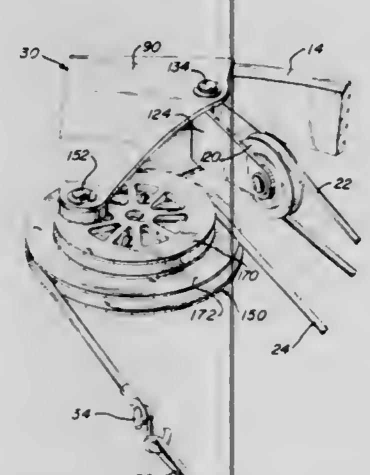

1. A compound bow for propelling an arrow comprising:
handle means for gripping and holding the bow;
a pair of limb means extending outwardly from opposite ends of said handle means for storing energy to propel the arrow;
a pair of cable means attached to the bow for causing flexing movement of said limb means;
a draw string means connected to said cable means for association with an arrow;
eccentric wheel means attached to outer end portions of each of said limb means for association with said cable means;
idler pulley means attached to outer end portions of each of said limb means for association with said cable means;
cable attachment means mounted on each of the outer end portions of said handle means for fixedly attaching said cable means to said bow;
draw weight adjustment means including pulley means mounted on each of the outer end portions of said handle means for association with said cable means;
said draw weight adjustment pulley means comprising:
variably adjustable mounting means for mounting said draw weight adjustment pulley means relative to said handle means whereby said draw weight adjustment pulley means is variably locatable relative to said handle means to vary the tension in said cable means;
each of said cable means having a first terminal portion attached to one of the outer end portions of said handle means by one of said cable attachment means, a first intermediate portion extending from said one cable attachment means to one of said idler pulley means on the outer end portion of the one limb means extending outwardly from the one of the outer end portions of said handle means;
a second intermediate portion extending from said one idler pulley means to one of said draw weight adjustment pulley means on the one of the outer end portions of said handle means;
a third intermediate portion extending from said one of said draw weight adjustment pulley means to one of said eccentric wheel means on the outer end portion of the other limb means; and
a second terminal portion extending from said one of said eccentric wheel means and connected to one adjacent end of said draw string means.
10. A bow for propelling an arrow comprising:
a handle member for gripping and holding the bow;
a pair of limb means extending outwardly from opposite ends of said handle means for storing energy to propel an arrow;
limb mounting means for removable and adjustable mounting of the inner end portions of said limb members on the outer end portions of said handle member;
each of said limb mounting means comprising: a first elongated flat abutment surface on the outer end portion of said handle member;
a transverse semi-cylindrical socket portion at the outer end of said first elongated flat abutment surface;
a semi-circular rib centrally located in said socket portion;
a second elongated flat abutment surface on the inner end portion of said limb member;
a transverse semi-cylindrical rib portion at the inner end of said second elongated flat abutment surface;
a semi-circular groove centrally located in said semi-cylindrical rib portion; said semi-cylindrical rib portion being mounted in rotatable supportive engagement with said semi-cylindrical socket portion with said semi-circular rib being in rotatable supportive engagement with said semi-circular groove and preventing axial displacement of said semi-cylindrical rib portion relative to said semi-cylindrical socket portion; and
threaded fastening means for fixedly adjustably receiving said inner end portion of said limb member to said outer end portion of said handle member.

4,064,863
ARROW REST
James C. Helmick, Grayling, Mich., assignor to Victor United, Inc., Chicago, Ill.
Filed June 11, 1976, Ser. No. 694,938
Int. Cl.² A41B *5/00*
U.S. Cl. 124—41 A **9 Claims**

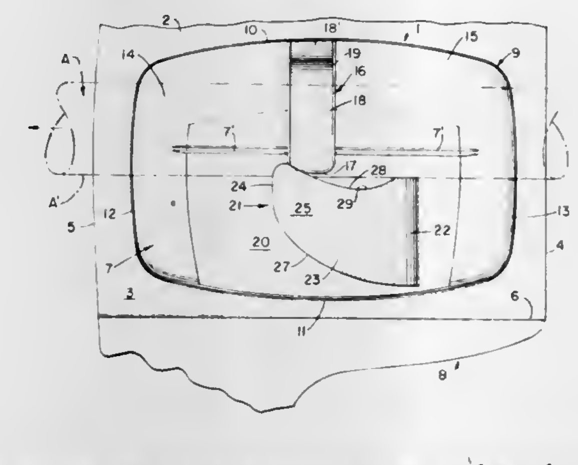

1. An arrow rest for attachment to an archery bow including, a base plate having a front surface and a rear attachment surface, said rear surface engageable with a bow surface whereby said base plate remains a stationary member with said front surface fixedly disposed relative thereto, a stationary guide rib on the upper portion of said front surface and provided with a fixed outer surface spaced outwardly from said plate front surface extending generally vertical downwardly from the uppermost edge of the base plate, a flap means of resilient material having a rear portion fixedly attached to the lower portion of said plate front surface at a point disposed rearwardly of said guide rib and including a forwardly extending main body section provided with a free end, said flap means when in an at-rest position angularly disposed relative to said base plate with said free end spaced away from and forwardly of the vertical plane of said guide rib, said flap means being of substantial depth as compared to its width at the area where the flap means attaches to the base plate, and said flap means being provided with an concave uppermost arrow shaft supporting surface juxtaposed said guide rib whereby an arrow shaft disposed upon said rest is supported upon its lower periphery by said flap means supporting surface and the lateral periphery of an arrow is biased into engagement with said rib outer surface by said flap means, and rearward drawing of an arrow frictionally displaces said resilient flap means rearwardly from its at-rest position while forward release of an arrow frictionally displaces said resilient flap means forwardly past its at-rest position with said flap means returning to its at-rest position after passage of an arrow over said flap means said entire arrow rest being of a one piece integrally molded resilient construction.

4,064,864
HEATING APPARATUS
Marlin V. Husa, Liberty, Nebr. 68381
Filed Oct. 12, 1976, Ser. No. 731,186
Int. Cl.² F24B *7/04*
U.S. Cl. 126—121 **7 Claims**

1. Apparatus for heating an enclosed area having a firebox open on one side toward the area to be heated and a chimney in fluid communication with the firebox on one end and the atmosphere outside the enclosed area on the other end, said apparatus comprising:
a. a plurality of tubular arm members, said arm members each having a first end and a second end with a directional change thus forming a curve therebetween, said first ends of said arm members adapted to project through the open side of the firebox and said second ends of said arm members adapted to project toward the chimney
b. an elongate conduit having first and second ends, said first end of said conduit fixed to and in fluid communication with said second ends of said arm members, said conduit adapted to extend at least partially along and within the chimney and terminating at said second end of said conduit within the enclosed area;
c. an air moving means in fluid flow communication with said conduit intermediate said first and second ends thereof for moving air from said conduit second end through said elongate conduit; and

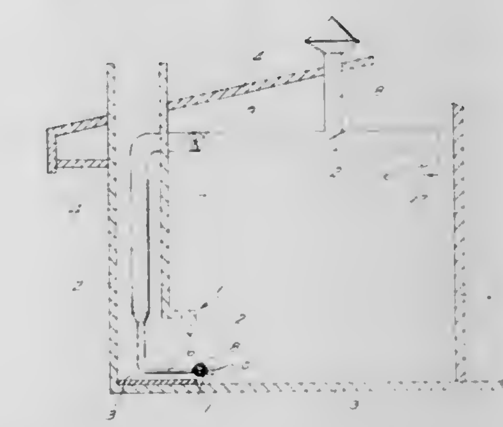

d. an open-ended elongate tubular chamber affixed to and in sealed fluid communication with said first ends of said arm members, said chamber having a multiplicity of orifices along the length thereof directed toward said curved portions of said arm members, the open ends of said chamber being located outside of the firebox; and
e. a valve in each of the open ends of said chamber.

4,064,865
SOLAR ACTUATED BOILER AND APPURTENANCES
Walter L. Depew, 3111 W. 54th Ave., Denver, Colo. 80221
Filed Apr. 28, 1975, Ser. No. 572,083
Int. Cl.² F24J *3/02*
U.S. Cl. 126—271 **10 Claims**

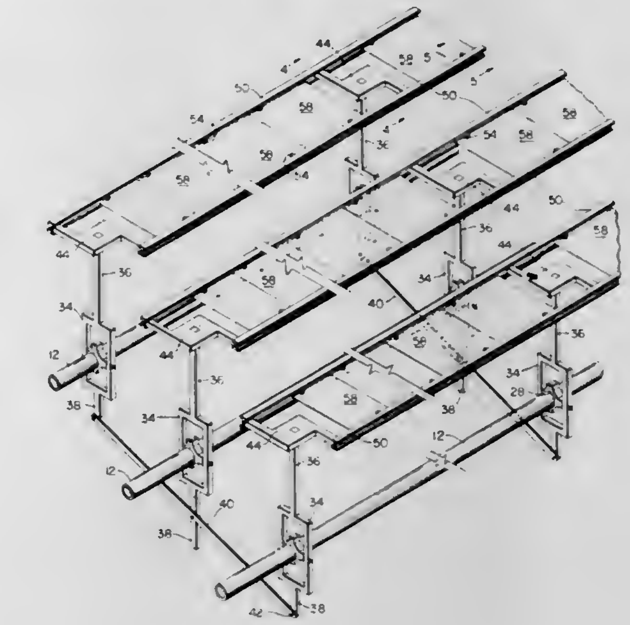

1. A solar boiler comprising:
at least one elongated header pipe, a plurality of ganged, discrete, movable mounted converging lenses adapted to provide a point image positioned adjacent to but spaced from the header pipe with each lense focused thereon to produce an individual and discrete focused point image on the header pipe corresponding to each lense, and tracking means connected to each lense to automatically and synchronously move the lenses through the azimuth to follow a solar body and maintain the focused, concentrated point image of the solar body on the header pipe, whereby the boiler may be maintained in an advantageous configuration for the collection of solar energy on the header pipe by the lenses as the relative position of the solar body and the boiler header pipe change.

4,064,866
FLAT PLATE SOLAR HEAT COLLECTOR
Philip A. Knight, Jr., Concord, Mass., assignor to Raytheon Company, Lexington, Mass.
Filed May 24, 1976, Ser. No. 689,608
Int. Cl.² F24J *3/02*
U.S. Cl. 126—271 **7 Claims**

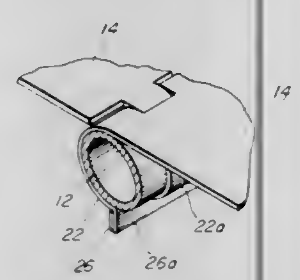

1. A solar heat collector for heating a fluid, comprising an open-topped container, a panel in said container positioned to be contacted by solar radiation entering the container through the open top, said panel comprising a number of collector plates disposed substantially in edge-to-edge relation in a common plane, fluid-conducting conduit disposed in engagement with said panel along adjoining edges of said plates, and gripping means on said plates encircling adjacent sections of said conduit for retaining the conduit in efficient heat-conducting relation with the plates, said gripping means comprising slotted areas disposed in each plate adjacent an adjoining edge and defining gripping members therebetween, the gripping members of a respective plate being interlocked with gripping members on an adjacent plate and defining therewith a channel within which said conduit is located, and a transparent cover disposed over the open top of the container and transmissive to solar radiation.

4,064,867
SOLAR HEAT COLLECTOR
Robert J. Schlesinger, 15150 Raymers, Van Nuys, Calif. 91405
Filed Aug. 2, 1976, Ser. No. 710,613
Int. Cl.² F24J *3/02;* **F24H** *7/00;* **F28F** *7/00*
U.S. Cl. 126—271 **10 Claims**

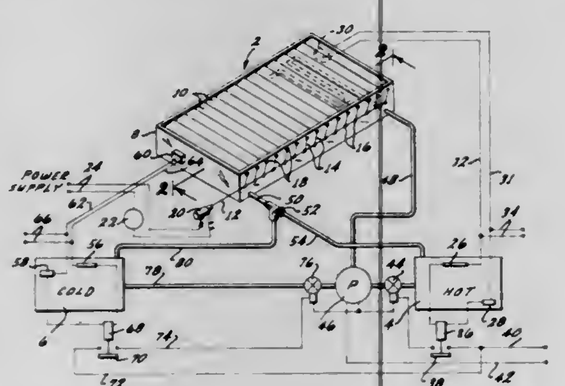

1. A solar heat collector system comprising:
a solar heating enclosure;
a first receptacle for a heated liquid medium;
a second receptacle for a cooled liquid medium;
heat transfer means within said enclosure for transferring heat to or from a liquid medium;
a closure for said enclosure which closure is transparent to radiant energy from the sun;
first means to convey a liquid medium from said first receptacle through said heat transfer means and then back to said first receptacle when said closure is in a closed position;
second means to convey a liquid medium from said second receptacle through said heat transfer means and then back to said second receptacle when said closure is in an opened position;
said transparent closure being made up of a plurality of closure members, and
means to move said closure members to an opened or a closed position in response to the level of radiant energy which impinges on said closure members.

4,064,868
SOLAR HEAT COLLECTOR
Otto J. Nussbaum, Huntsville, Ala., assignor to Halstead Industries, Inc., Scottsboro, Ala.
Filed Oct. 8, 1976, Ser. No. 731,030
Int. Cl.² F24J *3/02*
U.S. Cl. 126—271 **12 Claims**

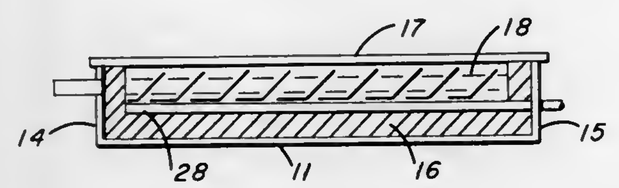

1. A heat collector for absorbing solar radiation, said collector comprising:
a collector panel defined by a thermal insulated backwall with projecting insulated side walls carrying an outwardly-spaced cover plate adapted to conduct incident solar energy toward said backwall,
a conduit extending along in a spaced-apart relation between said backwall and said cover plate to conduct a fluid medium for heating within said panel, and
a plurality of spaced-apart heat transfer fins in intimate contact with said conduit to absorb solar radiation and thereby increase the flux of heat into said conduit for heating the fluid medium therein, said heat transfer fins projecting from said conduit in a generally radial direction with respect to the flow direction of the fluid medium within said conduit, said heat transfer fins each essentially including a bent fin portion that projects along within the space between said conduit and said insulated backwall toward an adjacent fin.

4,064,869
APPARATUS FOR REGULATING THE BREATHING PATTERN
Peter Bernard Defares, Emmalaan 9, Driebergen; Wouter Wies van der Schaar, Laagschardammerweg 3, Schardam, and Eduard Theodorus Verveen, Westlandgracht 87''', Amsterdam, all of Netherlands
Filed Oct. 16, 1975, Ser. No. 623,075
Claims priority, application Netherlands, Oct. 16, 1974, 7413569
Int. Cl.² A61B *5/08;* **A61H** *31/00*
U.S. Cl. 128—2 R **15 Claims**

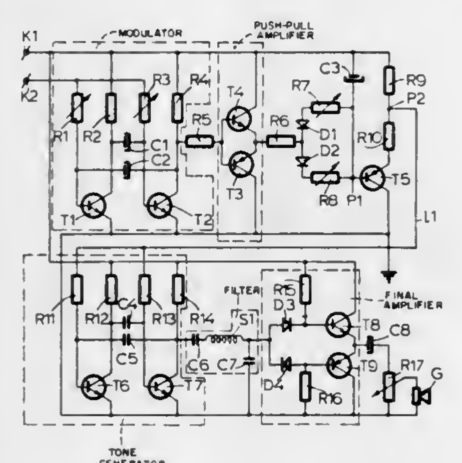

1. Portable apparatus for regulating the breathing pattern of patient, in particular as a remedy against the hyperventilation syndrome, comprising a sensor adapted to be attached to the body of the patient, said sensor including means responsive to the contractions and expansions of the chest for producing sensor output signals, means connected to said sensor for converting the output signals of said sensor into short control impulses of which the repetition frequency is equal to the breathing frequency, timing means adapted to deliver an output signal after elapse of a predetermined time interval and having a reset terminal, means connecting said signal convertng means to said reset terminal for supplying said control impulses to said reset terminal so that said timing means only provides output signals if the breathing frequency is below a prescribed limit frequency, tone generator means connected to said timing means for alternately producing two audible tones having a different character, means for rendering said tones perceptible to the patient connected to said tone generator means, and means connected to said timing means for preventing the operation of said tone generator means connected to said timing means when the ouput signals of said timing means occur regularly.

4,064,870
METHOD AND DEVICE FOR EVALUATING NERVE IMPULSE PROPAGATION VELOCITY AND LATENCY OF ELECTRODERMAL REFLEXES
Ioan Florin Dumitrescu; Constantin Cojocaru, and Constantin Bolintineanu, all of Bucharest, Romania, assignors to Centrul de Protectia si Igiena Muncii, Bucharest, Romania
Filed May 19, 1976, Ser. No. 687,656
Int. Cl.² A61B *5/05*
U.S. Cl. 128—2 N **3 Claims**

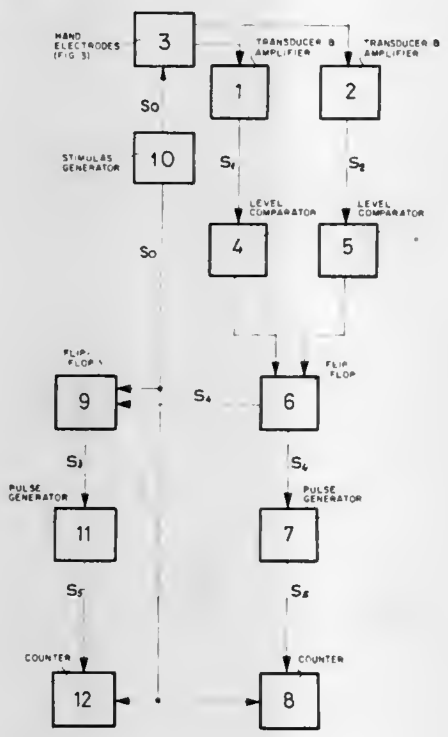

1. A method of evaluating nerve-impulse-propagation velocity through vegetative fibers of a human subject and the latency of electrodermal reflexes, comprising the steps of:
disposing two electrodes with a predetermined spacing on the palm of the hand of a subject in a common innervation area;
generating a stimulus to trigger a nerve response in said subject;
initiating the product of a train of first pulses simultaneously with the generation of said stimulus;
counting said first pulses;
terminating the counting of said first pulses upon detection of an electrodermal reflex at one of said electrodes, the resulting count of the first pulse representing the period of latency of electrodermal reflexes;
initiating a train of second pulses upon the detection of the electrodermal reflex at said one of said electrodes;
counting said second pulses;
terminating the counting of said second pulses upon the detection of a corresponding electrodermal reflex at the other of said electrodes; and
establishing the nerve-impulse progagation velocity of the subject by dividing the distance between said electrodes by the sum of the pulse durations and pulse intervals of the counted second pulses.

4,064,871
DEVICE FOR MAKING PRECISE INCISIONS FOR BLEEDING TIME TESTING AND THE LIKE
Woodrow James Reno, Baltimore, Md., assignor to Becton, Dickinson and Company, East Rutherford, N.Y.
Filed May 11, 1976, Ser. No. 685,370
Int. Cl.² A61B *10/00*
U.S. Cl. 128—2 G **5 Claims**

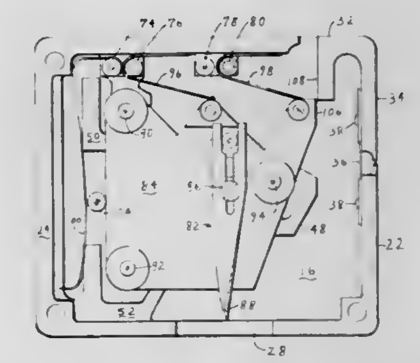

1. A device for the formation of precise incisions for clinically testing the bleeding time of human or animal subjects comprising: a housing; a surface on said housing; a slot extending along said surface defining a longitudinal opening into said housing; a blade mounted for movement within said housing, said blade having a tip end directed toward said slot; and, moving means mounted within said housing and operationally engaging said blade to move said blade (1) a predetermined distance through said slot and (2) a predetermined distance along said slot.

4,064,872
TEMPERATURE MEASURING DEVICE OF A LIQUID CRYSTAL LAMINATE
Sandor Caplan, Lawrenceville, N.J., assignor to Ashley-Butler, Inc., Somerville, N.J.
Filed Sept. 2, 1976, Ser. No. 719,730
Int. Cl.² A61B *6/10;* **C09K** *3/34*
U.S. Cl. 128—2 H **13 Claims**

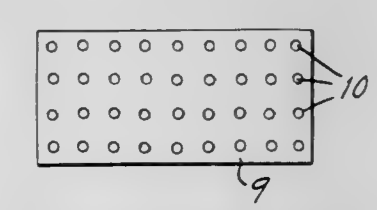

1. A temperature measuring device of high sensitivity and stability comprising a plurality of separate dots of liquid crystals which change color in a selected temperature range, sandwiched between two thin preformed, self-supporting films of heat sealable sheet material containing up to 500 mg per ream of monomeric components of solvents which are reactive with or soluble in the liquid crystal, a bottom opaque film and a top polymer film through which the color changes in the liquid crystals can be observed, the two films being sealed together in a grid pattern along narrow seal lines to form a multiplicity of separate cells, each cell containing a dot of liquid crystal.

4,064,873
TONGUE BLADE FOR MOUTH GAG
Rudolph E. Swenson, 3142 Windsor Court, Lafayette, Calif. 94549
Filed June 10, 1976, Ser. No. 694,541
Int. Cl.² A61B *1/00*
U.S. Cl. 128—12 **6 Claims**

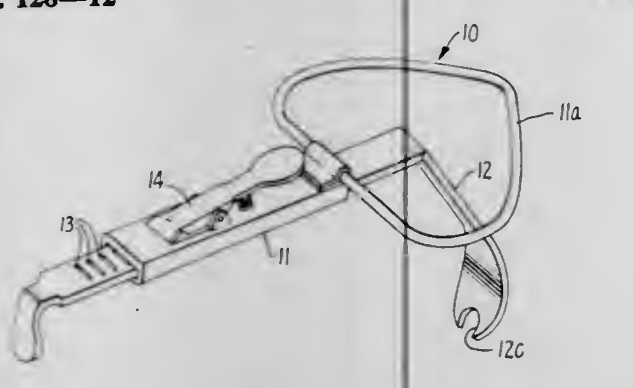

1. A series of tongue blades for use in combination with a frame and forming part of a mouth gag, said tongue blades being formed in various sizes, each blade having a handle portion and a tongue-engaging portion that extends from said handle portion at an obtuse angle between 120° and 135°, said tongue-engaging portion having a curved tip that is formed with a radius of curvature less than three-fourths inch at a distance greater than 2 inches from said handle portion whereby the handle portion and tongue-engaging portion of each tongue blade define an unobstructed obtuse angular void therebetween extending from the handle portion a distance of at least 2 inches.

4,064,874
PROTECTIVE ORTHOPEDIC DEVICE
Norman A. Valin, 4803 N. Crescent Ave., Norridge, Ill. 60656
Filed May 24, 1976, Ser. No. 689,595
Int. Cl.² A61F *3/00*
U.S. Cl. 128—80 C **6 Claims**

1. A compact protective orthopedic device for joints of the body, said device comprising: tubular elastic support means, said support means being adapted to substantially surround one of said joints, said support means having formed axially and peripherally therein sleeve means; and brace means being shaped and dimensioned to be insertingly accommodated by said sleeve means and said brace means being characterized as fully articulated in the normal direction of articulation of said joint, said brace means being further characterized as being rigid in a direction transverse to said normal direction, said bracing means including more than two link members, each said link member being greater longitudinally than laterally and being pivotally articulated to its adjacent partners for flexing in a common plane and each said brace means having more than one pivot for permitting said link members to pivotally articulate with respect to one another and with said joint.

4,064,875
ANTI-SUFFOCATION MEANS FOR AIRCRAFT BREATHING MASK
Robert L. Cramer; Jack E. Dunbar, and James A. Mientus, all of Davenport, Iowa, assignors to The Bendix Corporation, South Bend, Ind.
Filed July 2, 1976, Ser. No. 701,781
Int. Cl.² A62B *7/00*
U.S. Cl. 128—142.2 **7 Claims**

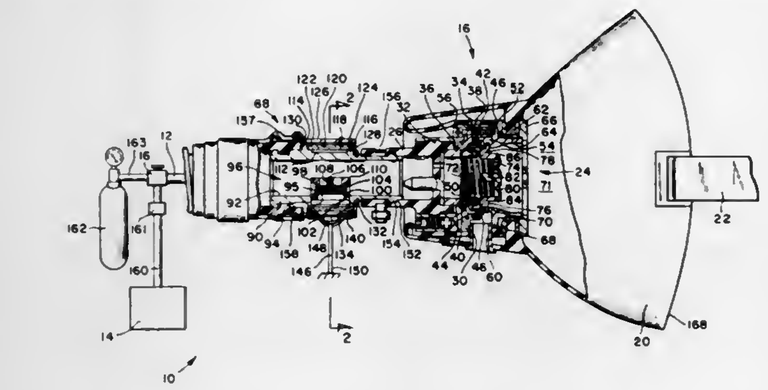

1. Anti-suffocation means for allowing the communication of air from a surrounding environment into a breathing system in an emergency condition when a source of breathable fluid is insufficient to meet an inhalation demand of a recipient, said anti-suffocation means comprising:

a housing having a bore therein adapted to be connected to said breathing system, said housing having an opening connecting said bore to the surrounding environment;

valve means responsive to said inhalation demand for allowing communication of air through said opening;

filter means connected to said opening, said filter having a microporous membrane means for forming a barrier through which the transmission of water is inhibited to prevent contamination of the breathing system by any water present in the surrounding environment during the operation of said valve means by said inhalation demand;

clip means attached to said housing for sealing said opening from the surrounding environment prior to said emergency condition; and

means for removing said clip means from the housing when an emergency condition occurs to allow said anti-suffocation means to operate should the recipient present a predetermined inhalation demand on said breathing system.

4,064,876
AIR-POLLUTION FILTER AND FACE MASK
Charles L. Mulchi, New Carrollton, Md., assignor to Stanley I. Wolf, Rockville, Md., a part interest
Filed Jan. 30, 1976, Ser. No. 653,717
Int. Cl.² A62B *7/10*
U.S. Cl. 128—146.6 **49 Claims**

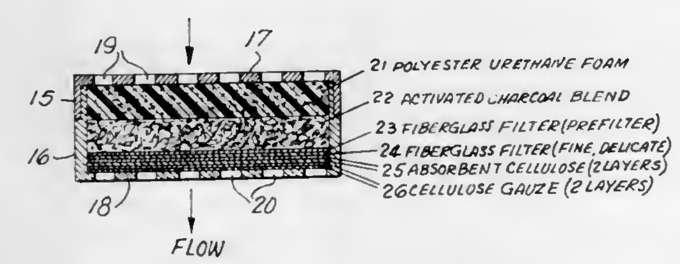

1. A filter having a plurality of component elements which, in combination, provide means for passing a gas stream therethrough at a flow rate which, per circular section of about 5 centimeters in diameter, is in the range of from 50 ± 20 liters per minute at a pressure drop of at most about 6.0 centimeters of water, the elements comprising, in sequence:

i. porous compressible means to filter contaminated gas;

ii. particulate activated charcoal means;

iii. low-resistant prefilter means to supplement physical filtration provided by (i);

iv. low-resistant filter means for filtering particulate matter as small as 0.3 micron in diameter;

v. absorbent means to trap moisture and to protect (iii) and (iv) from mechanical damage; and

vi. means to support and protect preceding elements;

the porous compressible filter means providing means for removal of large dust particles, pollen grains, other particulate matter and aerosol droplets from the gas stream; the particulate activated carbon means providing means for removal of irritating gases from the gas stream; each element being in direct contact with adjacent elements, exerting a positive pressure against such adjacent elements to maintain them in position and having its designated function under such pressure.

4,064,877
SURGICAL TABLE WITH ANESTHETIC DISPENSING MEANS
George S. Moscowitz, Crane Road, Carmel, N.Y. 10512; John F. Rosen, and Sarah Hiatt, both of Baldwin Place Road, Mahopac, N.Y. 10541
Filed Aug. 30, 1976, Ser. No. 718,788
Int. Cl.² A61M *17/00*
U.S. Cl. 128—188 **14 Claims**

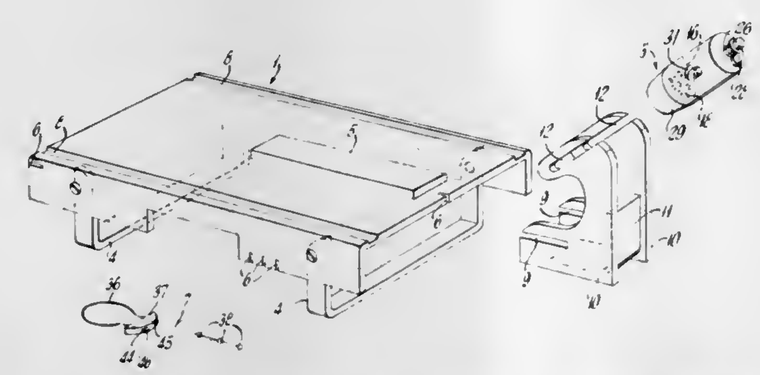

1. An anesthetic dispenser comprising a body of generally cylindrical shape and having two ends, a top on one of said ends, a barrier intermediate said ends and dividing said dispenser into a receiving chamber and a dispensing section,

valve means adapted to control the flow of said anesthetic from said receiving chamber to said dispensing section comprising a generally cylindrical opening in said barrier, a stem in said opening, said stem having a wide portion and a narrow portion, said wide portion being at least of substantially the same size as said opening and said narrow portion being substantially smaller than said opening, means for moving said stem axially of said opening into a first position and a second position, said wide portion blocking said opening when said stem is in said first position and apart from said opening when said stem is in said second position, whereby anesthetic is permitted to flow from said chamber into said section when said stem is in said second position,

the end of said section remote from said barrier being perforated to permit said anesthetic vapor to pass therethrough, said top including an opening having a sealable filling means therein for introduction of said anesthetic into said receiving chamber, diametrically opposed support means extending radially of said body, a stand comprising two substantially parallel, vertical side portions, said side portions being spaced apart horizontally and connected by a web extending therebetween adjacent the bottom end of said stand, a dispenser slot in each side portion adjacent the upper end of said stand, said slots being complementary to said support means, said support means slidably located in said dispenser slots whereby said dispenser is suspended from said stand.

4,064,878
INHALATION DEVICE
Ingemar H. Lundquist, Oakland, Calif., assignor to Syntex Puerto Rico, Inc., Humacao, Panama
Division of Ser. No. 586,771, June 13, 1975, abandoned. This application Oct. 26, 1976, Ser. No. 735,666
Int. Cl.² A61M *15/08*
U.S. Cl. 128—206 **5 Claims**

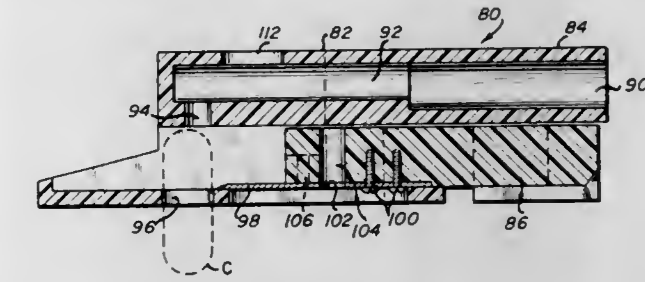

1. An inhalation device for dispensing a powdered medicament from a medicament-holding container comprising

an elongate housing having a passageway for the movement of air therethrough, one end of said housing being an output end adapted for insertion into the mouth or nasal passages of a user thereof, said passageway terminating in an emptying chamber adjacent the output end of said housing, said passageway having an inlet stream of said emptying chamber;

a guide channel on said elongate housing, means for holding a top portion of a closed, powdered-medicament holding container within said guide channel, said guide channel supporting means to open the container;

said container opening means comprising a slideable member slideably mounted within said guide channel, said slideable member having a cutting blade positioned adjacent said holding means whereby a top portion of the container is severed as said blade is moved from a first, retracted position through said container in said holding means to a second, container-severed position;

a first communication means comprising at least one first passageway extending through said slideable member for placing the interior of the severed container in communication with the atmosphere surrounding said inhalation device when said slideable member is in the second position; and

second communication means comprising a second passageway extending through said slideable member for placing the interior of the severed container in communication with said passageway through said elongate housing via said inlet when said opening means is in the second position whereupon, during inhalation, air drawn through said first communication means causes the powdered medicament to be expelled from the container through said second communication means, said inlet, said passageway and said emptying chamber into the nose, throat or lungs of a user thereof.

4,064,879
PRESSURE-INDICATING SYRINGE
Saul Leibinsohn, Rishon Lezion, Israel, assignor to Metatech Corporation, Northbrook, Ill.
Filed Apr. 6, 1976, Ser. No. 674,283
Int. Cl.² A61M *5/00*
U.S. Cl. 128—215 **19 Claims**

1. A syringe comprising: a barrel having an apertured wall at one end and open at its opposite end; a plunger assembly movably received within the open end of the barrel; said plunger assembly including a shaft at its outer end, and a piston at its inner end defining a compartment with the barrel apertured wall for receiving a fluid to be injected through the aperture thereof; finger-gripping elements on the barrel and on the plunger shaft enabling the latter and the piston to be manually

moved towards the apertured wall of the barrel for pressure-injecting fluid therethrough; an elastic connection between the finger-gripping element of the plunger shaft and the piston enabling the piston to be displaced relative to the shaft finger-

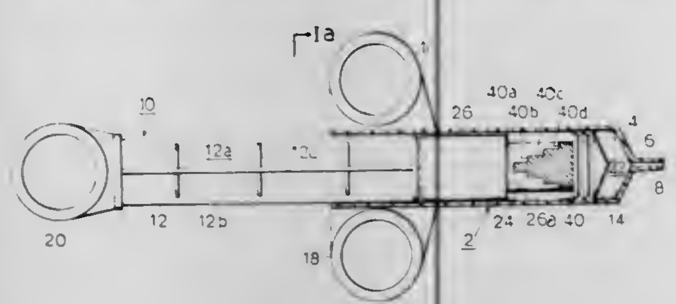

gripping element an amount corresponding to the pressure on the piston during the injection of the fluid, and indicium carried by said piston and viewable through said barrel thereby providing a viewable indication of the injection pressure.

4,064,880

SANITARY TUBULAR NAPKIN FOR MALES

Dexter J. Logan, 1215 W. Farlington St., W. Covina, Calif. 91790

Filed Sept. 7, 1976, Ser. No. 721,099

Int. Cl.² A61F *5/42*

U.S. Cl. 128—294 **1 Claim**

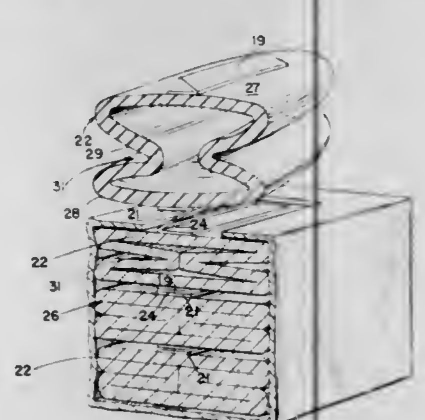

1. A tubular sanitary napkin of the type described, comprising:
 a removal-tab positioned centrally of said napkin;
 said napkin being closed at one end, and being open at the other end thereof, and having an upper portion and a lower portion, wherein said removal-tab is affixed to said upper portion of said napkin;
 a retaining element fixedly positioned centrally on said lower portion of said napkin;
 a second napkin having an upper and a lower portion, including a removal-tab affixed to said upper portion thereof and joined to said retaining element of said lower portion of said first napkin;
 joining means for joining together said tabs;
 a plurality of similar napkins having their removal-tabs joined to the retaining elements of preceding napkins, and having their retaining elements joined to the removal-tabs of subsequent napkins — said plurality of napkins forming a tandem set of napkins, whereby said tandem set of napkins may be compacted to a flat pack;
 and wherein said napkins have an upper surface, a lower surface, and two side surfaces;
 each of said side surfaces having a longitudinal re-entrant fold therein.

4,064,881

SURGICAL CLIP APPLICATOR

Hayden Gwyn Meredith, Kingsbury, England, assignor to Rocket of London Limited, Watford, England

Filed June 1, 1976, Ser. No. 691,324

Claims priority, application United Kingdom, June 6, 1975, 24374/75

Int. Cl.² A61B *17/10, 17/12*

U.S. Cl. 128—325 **5 Claims**

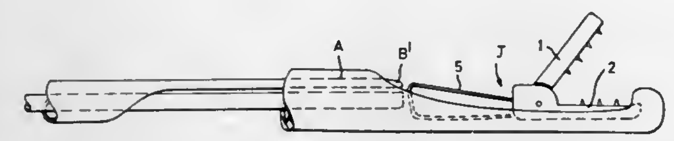

1. In a hand operated surgical clip applicator for positioning and actuating a jaw-like surgical clip and clamping an associated spring thereon comprising an elongated positioning tube having a cradle at one end thereof for holding said clip and spring and independent actuating and clamping controls at the opposite end thereof, a first actuating member slidably mounted within said tube for actuating said jaw-like clip and an independent second actuating member slidably mounted within said tube for clamping said associated spring on said clip, said independent actuating and clamping controls controlling slidable movement of said actuating members, the improvement wherein said controls are of a pistol grip assembly configuration adapted for operation by only one hand of an operator comprising a stationary elongated carriage member depending from said tube in fixed, spaced, substantially parallel relationship thereto and supporting a fixed gripping butt thereon, a trigger member pivotally mounted on said carriage for movement toward and away from said butt and connected to said first actuating member for controlling sliding movement of said first actuating member toward and away from said cradle, and a slide lever slidably mounted on said carriage member for reciprocal sliding movement therealong and connected to said second actuating member for independently slidably moving said second member along said tube as said slide lever slides along said carriage member, said slide lever including a laterally extending actuating portion adapted for actuation by the same hand of the operator gripping said butt and trigger members.

4,064,882

TRACHEOSTOMY TUBE WITH PRESSURE RELIEF VALVE

George Michael Johnson, La Palma; Kenneth Keith Krueger, Tustin, and Todor Pavlov, Laguna Niguel, all of Calif., assignors to Shiley Laboratories, Inc., Irvine, Calif.

Filed Aug. 25, 1975, Ser. No. 607,231

Int. Cl.² A61M *25/00*

U.S. Cl. 128—351 **13 Claims**

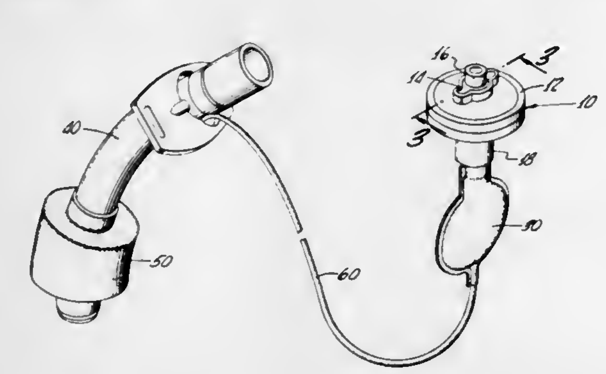

1. In a tracheostomy tube system of the type which includes a tracheostomy tube having an outer end and an inner end adapted to be inserted into the trachea of the user, an inflatable cuff surrounding the tube, and means for inflating the cuff, the improvement wherein the means for inflating the cuff comprises, in combination:

 a fluid inlet adapted to receive the tip of means for supplying fluid under pressure, a fluid outlet and valve means between said fluid inlet and said fluid outlet;
 means for passing fluid under pressure from the fluid inlet through said valve means and then through said fluid outlet connected to the inflatable cuff so that the valve means is interposed between the inlet and the cuff; and
 said valve means including vent valving means in fluid communication with said fluid inlet for venting fluid during the inflation of the cuff only when the pressure in the fluid at the inlet reaches a predetermined pressure value to thereby prevent application of pressure greater than said value to the outlet of said valve means and thereby to the cuff.

4,064,883

DENTAL FLOSS THREADER WITH LOCKING MEANS

George Ronald Oldham, Lakewood, N.J., assignor to Johnson & Johnson, New Brunswick, N.J.

Filed May 3, 1976, Ser. No. 682,282

Int. Cl.² A61C *15/00*

U.S. Cl. 132—93 **3 Claims**

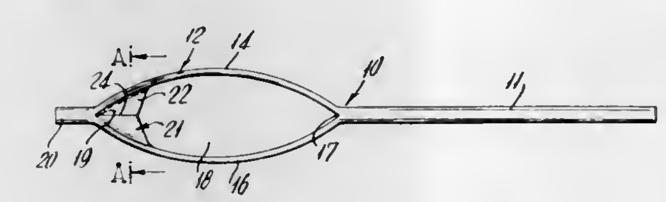

1. A dental floss threader adapted to lock dental floss thereto comprising a semi-rigid shank having smooth surfaces; an eyelet integrally joined at one end of said shank, said eyelet being formed by a division at one end of said shank into two filaments, each filament having a cross sectional area less than the cross sectional area of said shank, said filaments diverging in arcuate opposing relationship and converging at a point spaced from said end of said shank thereby forming an elongated loop, said filaments being integrally merged at the point of convergence to form a short, unitary stem at that end of said eyelet; and locking means integrally joined to said eyelet and responsive to insertion of dental floss therein for locking said dental floss to said threader, said locking means and said eyelet being formed from plastic material, the locking means consisting of a film of plastic material extending from said point of convergence of the filaments a short distance into the plan of the eyelet so that the film connects the converging filaments, said film having a thickness less than the thickness of said filaments, said film being separable between said converging filaments so that when dental floss is inserted into said eyelet, and is urged against said film, said film separates to form a slot therein whereby said slot and separated film portions cooperate to lock said floss in place to prevent slippage of said floss during use.

4,064,884

METHOD AND DEVICE FOR STRIPPING OFF, WASHING AND DRYING SURFACE TREATED OBJECTS IN LONG LENGTHS SUCH AS STRIP, WIRE, ROD, SECTIONS OR FIBRES

Hans Eskil Asp, Hammaro, Sweden, assignor to C. J. Wennberg AB, Sweden

Filed Mar. 25, 1976, Ser. No. 670,432

Claims priority, application Sweden, Mar. 25, 1975, 7503464

Int. Cl.² B08B *1/02*

U.S. Cl. 134—15 **4 Claims**

1. A method for cleaning an elongated object which has been surface-treated at a station with a fluid medium, comprising:
 a. continually moving the object in a direction along its length through a subsequent first station;
 b. continually spraying the entire periphery of the object as it passes through said first station with a liquid of substantially the same kind as said fluid medium, all the spray being directed counter to said direction of movement, and recirculating the sprayed liquid;
 c. thereafter, at least partially drying the object with air moving in said first station in an opposite direction, and separating the used air from the liquid about to be recirculated;
 d. thereafter repeating steps (b) and (c) in at least one subsequent second station, each time using and recirculating a more diluted form of said liquid;
 e. selectively transferring some of the recirculated liquid to the next preceding station; and
 f. said liquid, in the last station, substantially comprising a solvent forming a part of said fluid medium.

4. Apparatus for cleaning an elongated object which has been surface-treated at a station with a fluid medium, comprising:

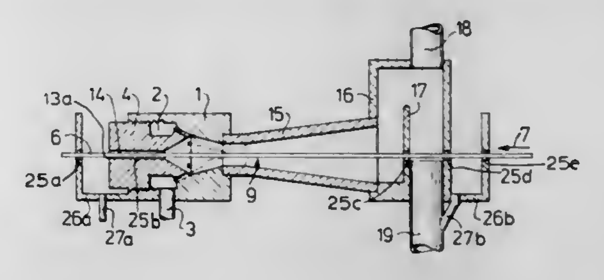

 a. a fluid-inlet assembly having a multiple jet nozzle upstream of a venturi, said inlet assembly having a passage extending therethrough with a cross-section larger than that of the object for enabling the intake of drying gas as the object is passed therethrough in an object-feeding direction, all the jets of said nozzle being directed for guiding liquid through air into impingment with the object at an angle having a vector opposite to said feeding direction;
 b. means for supplying liquid to said jet nozzle of substantially the same type as said fluid medium; and
 c. a discharge assembly connected to said fluid inlet assembly in which moist air and liquid are separated, having an outlet from which moist air is vented to the atmosphere, having a separate outlet through which liquid injected from said jet nozzle is removed, and through which assembly the object passes to said passage.

4,064,885

APPARATUS FOR CLEANING WORKPIECES BY ULTRASONIC ENERGY

Jean G. M. Dussault, Naugatuck; Robert A. Geckle, Newtown, and William L. Puskas, Trumbull, all of Conn., assignors to Branson Ultrasonics Corporation, New Canaan, Conn.

Filed Oct. 26, 1976, Ser. No. 735,601

Int. Cl.² B08B *3/02*

U.S. Cl. 134—58 R **13 Claims**

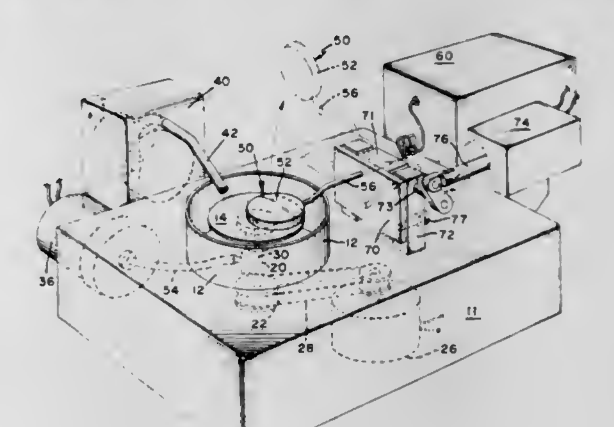

1. Apparatus for cleaning a workpiece, such as a semiconductor wafer, comprising:
 a rotatable support including means for holding a workpiece on said support;

means coupled to said support for rotating said support to cause a workpiece disposed on said support to undergo rotation;
means for flooding the exposed side of the workpiece with a flowing film of cleaning solvent;
mounting means disposed for supporting electroacoustic transducer means opposite said exposed side;
electroacoustic transducer means coupled to said mounting means for providing, when said transducer means is energized, ultrasonic energy to said flowing film of solvent and causing cavitation therein for cleaning said exposed workpiece side;
electrical generating means coupled for energizing said transducer means, and
control means coupled to said means for rotating, said means for flooding and said electrical generating means for providing operation of said respective means in predetermined sequence.

4,064,886
APPARATUS FOR CLEANSING ENDOSCOPES
Helmut Heckele, Knittlingen, Germany, assignor to Riwoplan Medizin-Technische Einrichtungs-Gesellschaft mbH, Knittlingen, Germany
Filed Nov. 17, 1976, Ser. No. 742,579
Claims priority, application Germany, Nov. 20, 1975, 2552011
Int. Cl.² B08B *3/02, 3/12*
U.S. Cl. 134—95 **4 Claims**

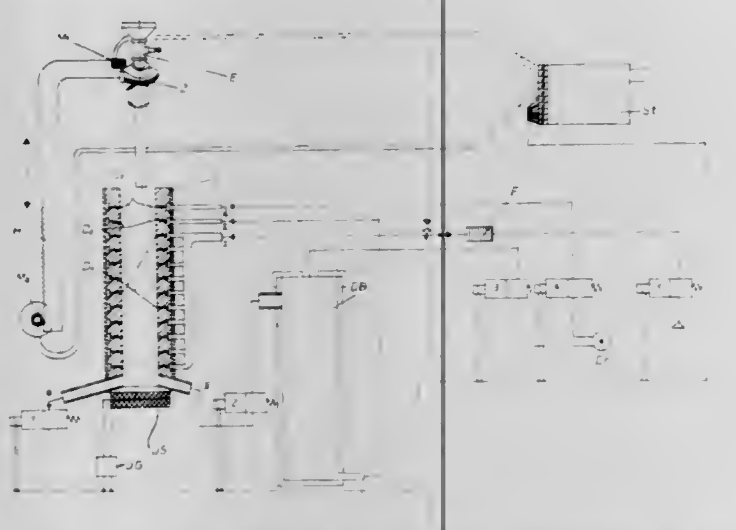

1. Apparatus for cleaning endoscopes comprising a container having a first set of nozzles connected to a source of water, a second set of nozzles connected to a source of disinfecting liquid, and a third set of nozzles connected to a source of compressed air, control valves respectively interposed between each source and the related nozzles, a rotatable mount positioned above the container and adapted to suspend the endoscope, a vertically movable support supporting the mount so that on downward movement the suspended endoscope is submerged in whilst on subsequent upward movement the endoscope emerges from the container, motor means respectively for moving the support and rotating the mount, and control means for selectively operating the motors and the valves.

4,064,887
UPPER LEVEL WASH ARM SYSTEM
Paul B. Geiger; Ernst Grunewald, and Ben J. Vallor, all of Troy, Ohio, assignors to Hobart Corporation, Troy, Ohio
Filed July 27, 1976, Ser. No. 708,926
Int. Cl.² B08B *3/02*
U.S. Cl. 134—144 **10 Claims**

1. In an upper level wash arm system for a dishwashing machine having a tank defining a cleansing chamber, a fluid recirculating pump having an inlet and an outlet, lower and upper racks supportable within the tank and movable horizontally between washing and extended positions, at least one fluid spray member, and vertical adjustment means mounting the upper rack for selective vertical adjustment of the washing position thereof within the dishwasher tank, the improvement comprising:
a. means mounting the fluid spray member on the upper rack for vertical movement therewith in response to vertical adjustment of the rack,
b. a first coupling member supported in the dishwasher at a relatively fixed height in the tank,
c. a conduit for conducting fluid from the pump outlet to said first coupling member,
d. a second coupling member for engaging the first coupling member for receiving fluid therefrom when the upper rack is in any of the selected washing positions thereof within the dishwasher tank,

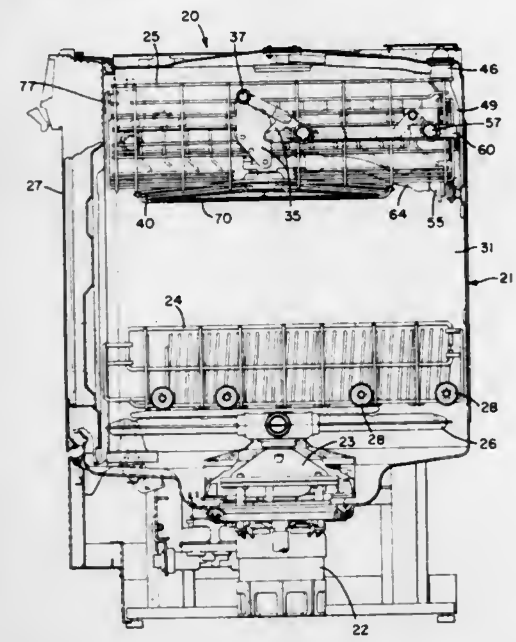

e. means mounting said second coupling member on the upper rack at substantially a constant vertical height when the rack is in any of the selected washing positions within the dishwasher tank for enabling coupling to said fixed height first coupling member independently of the adjusted vertical position of the rack, and
f. means for conducting fluid from said second coupling member to the fluid spray member and for compensating for possible differences in the relative vertical positions between said second coupling member and said spray member when the rack is in a washing position within the tank.

4,064,888
VENT STRUCTURE FOR DISHWASHERS
Howard Diebel, St. Catharines, Canada, assignor to Moyer Diebel Limited, Jordan Station, Canada
Filed Feb. 7, 1977, Ser. No. 766,359
Int. Cl.² B08B *3/02*
U.S. Cl. 134—182 **6 Claims**

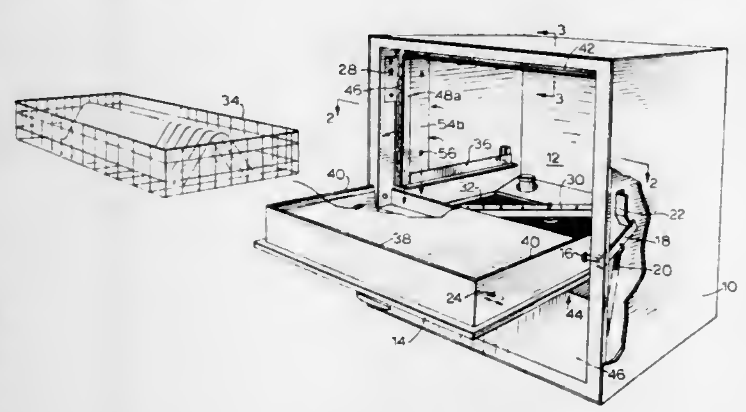

1. A dishwasher of the batch type comprising a body providing an enclosure,

water spray means mounted in the enclosure for spraying water on to dishes placed therein,
a sump within the enclosure receiving liquid that drains thereto,
a door for the enclosure pivotably mounted to the body and movable between open and closed positions,
seal means mounted around the said body opening and engaged by the door in closed position for sealing the junction between the body and the door,
vent means comprising a vent structure mounted to the body to one side of the door, the said vent structure providing at least one labyrinth vent passage connecting the body interior and the ambient atmosphere through which gas and vapour from the body interior can pass with change of direction of flow so as to promote contact thereof with the walls of the vent passage, and
the vent structure also providing at least one vertical drain passage connecting the vent passage and the sump and having passage walls in common with the vent passage whereby moisture condensing on the said walls drains down to the said sump.

4,064,889
BREAK-AWAY SAFETY VALVE
Harold R. Gayle, Wilmington, Del., and Walter D. Wagner, Chadds Ford, Pa., assignors to Sun Oil Company of Pennsylvania, Philadelphia, Pa.
Filed Feb. 17, 1976, Ser. No. 654,503
Int. Cl.² F16K *17/36*
U.S. Cl. 137—68 R **2 Claims**

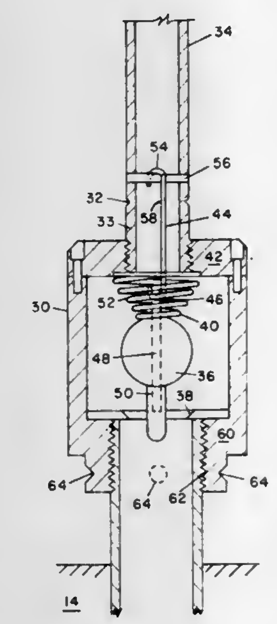

1. A break-away valve system designed to automatically close in the event of damage to the valve and comprising:
a. a valve housing and a break-away section separated from said valve housing having a weakened portion which consists of a groove around the circumference of the break-away section whereby substantial force on the valve system results in separation of the break-away section from the housing
b. said break-away section having a retainer means;
c. a substantially circular valve seat within said valve housing;
d. a valve element in said valve housing having a substantially spherically shaped surface which is adapted to close against said valve seat to close the valve, and a guide element, extending through the valve element and loosely into the valve seat so that the guide element does not normally contact the valve seat when the valve is open, to guide the spherically shaped surface into a seating relationship against said valve seat while the valve is closing;
e. spring means for biasing said valve element towards said valve seat to close the valve; and
f. pin means coupled to said retainer means in said break-away section and extending through a general plane of the weakened groove and holding said valve element away from said valve seat against the bias of said spring means which places said pin means in tension, said pin means being adapted to sever in the event said valve system severs along the weakened portion, whereby the valve element is biased against the valve seat and closes the valve.

4,064,890
PRESSURE REGULATOR AND SAFETY RELIEF VALVE
Jr. Collins, Fort Washington, and James J. Kokinda, Allentown, both of Pa., assignors to Air Products and Chemicals, Inc., Allentown, Pa.
Continuation of Ser. No. 589,442, June 23, 1975, abandoned, which is a division of Ser. No. 437,896, Jan. 30, 1974, Pat. No. 3,911,948. This application Sept. 20, 1976, Ser. No. 724,503
Int. Cl.² F16K *13/04*
U.S. Cl. 137—73 **1 Claim**

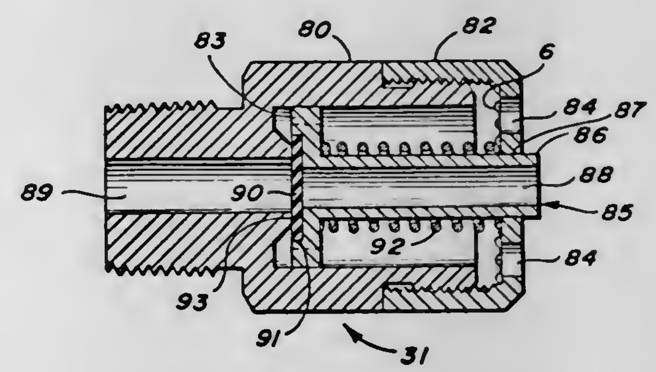

1. In an oxygen pressure regulator for maintaining constant lower pressure of oxygen gas delivered from a relatively high pressure source of the type including a casing having an internal flexible diaphragm dividing said casing into two major chambers, one chamber being vented to the atmosphere and containing adjustable resilient means for exerting a predetermined constant pressure against the diaphragm, and the other chamber being a gas chamber divided into two subchambers, a first inlet sub-chamber for receiving said high pressure gas and a second outlet sub-chamber for accumulating and delivering said gas at a lower pressure to an outlet means provided with valve-controlled inlet means connectable between said first and second sub-chambers to regulate the pressure of said gas in said outlet sub-chamber, the improvement comprising:
a pressure relief valve in communication with said outlet sub-chamber, comprising in combination;
a generally cylindrical housing having an inlet port and an outlet port said outlet port closed by a cap threadably engaging said housing, said cap having a plurality of apertures defining a flow path from said housing to the atmosphere;
a valve closure member in the form of a stepped cylinder having a T-shaped cross-section with a generally cylindrical bore through said valve closure, said bore closed by a single combustible elastomeric element and also being positioned to close said inlet port, said valve closure slidably disposed within said housing and extending outwardly of said cap through a suitable aperture therein said valve closure member exterior and said housing coacting to effect a first passage means to allow passage of fluid from said inlet port to said outlet port when pressure in said outlet sub-chamber exceeds a given value;
a spring disposed around the longer of the cylindrical sections of said valve closure and extending between the base of said cylindrical section of said closure and said cap to urge said valve closure member toward said inlet port to prevent passage of gas until the gas pressure at the inlet exceeds a preset limit said cap movable to adjust the tension on such spring to adjust the pressure at which said valve will open;
whereby if combustion occurs inside said regulator, said

combustible element will be consumed regardless of the pressure on said valve closure member, thus venting said combustion from said regulator to prevent cataclysmic failure of said regulator.

4,064,891
PLURAL FLUID PROPORTIONING APPARATUS
H. Alfred Eberhardt, Paoli, Pa., assignor to Hale Fire Pump Company, Conshohocken, Pa.
Continuation-in-part of Ser. No. 477,156, June 6, 1974, abandoned. This application Dec. 24, 1975, Ser. No. 644,063
Int. Cl.^{2} G05D *11/00*
U.S. Cl. 137—98 **29 Claims**

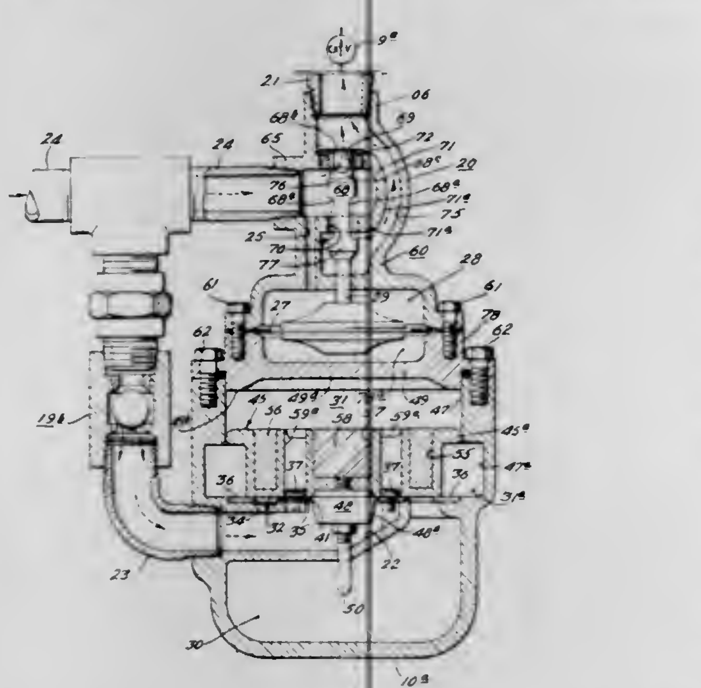

9. A valve for mixing a primary fluid with a secondary fluid in a predetermined proportion comprising: a body having a first inlet for primary fluid and a second inlet for secondary fluid and an outlet, separate port means providing fluid communication between said first and second inlets and said outlet, a valving member extending across said first and second port means and mounted in a chamber for vertical movement in response to fluid flow through said port means, means carried by said valving member to bias said member into a lower limit position normally closing fluid flow through said port means, means slidably mounting said valving member for said vertical movement in said chamber, first bypass port means in said valving member establishing fluid communication between said first inlet and said outlet for said primary fluid and second bypass port means establishing fluid communication between said second inlet and said outlet when said valving means is in its lower closed position, said first bypass means being of a greater cross sectional area than said second bypass port means and said first and second bypass ports being of a predetermined relative cross sectional area to provide flow therethrough in relation to the predetermined ratio of said primary and secondary fluids.

4,064,892
POLLUTION CONTROL DEVICE
Frank Brisko, Box 38, Ojibwa, Wis. 54862
Division of Ser. No. 470,262, May 15, 1974, Pat. No. 3,951,115. This application Jan. 8, 1976, Ser. No. 647,627
Int. Cl.^{2} F16K *11/07*
U.S. Cl. 137—110 **2 Claims**

1. A valve for controlling the flow of crankcase vacuum gases to an engine induction system and for providing a preselected control pressure to a pollution control device comprising a valve housing defining a valve bore, a first port opening into said bore at one end thereof and adapted to communicate with a discharge of a crankcase vacuum system, a second port communicating with said bore at the opposite end thereof and adapted to be positioned in fluid communication with the engine induction system, a valve spool slidably supported in said bore, a third port formed in said housing communicating with said bore between said first and said second ports, means providing communication between said third port and said second port for permitting the flow of gases from said first port through said third port to said second port, means on said valve spool and said housing for varying the degree of fluid communication between said first and said third ports in relation to the position of said valve spool in said valve bore, and a fourth port opening into said valve bore at a point spaced from said valve spool when said valve spool is in one of its extreme positions and being adapted to be closed by said valve spool when said valve spool moves from said one extreme position, said fourth port being adapted to provide a control pressure signal to a pollution control component of the associated engine.

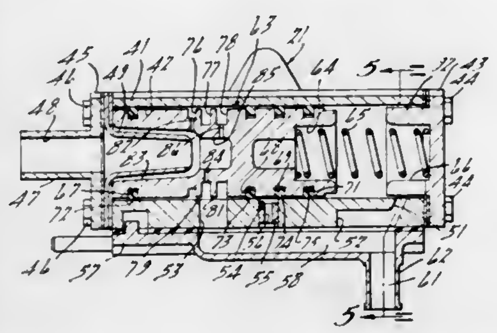

4,064,893
DISCHARGE SYSTEM FOR BALLAST TANK OR THE LIKE
Gillies D. Pitt, Harlow, England, assignor to International Standard Electric Corporation, New York, N.Y.
Filed Nov. 26, 1976, Ser. No. 745,059
Claims priority, application United Kingdom, Dec. 4, 1975, 49822/75
Int. Cl.^{2} G05D *11/00*
U.S. Cl. 137—115 **1 Claim**

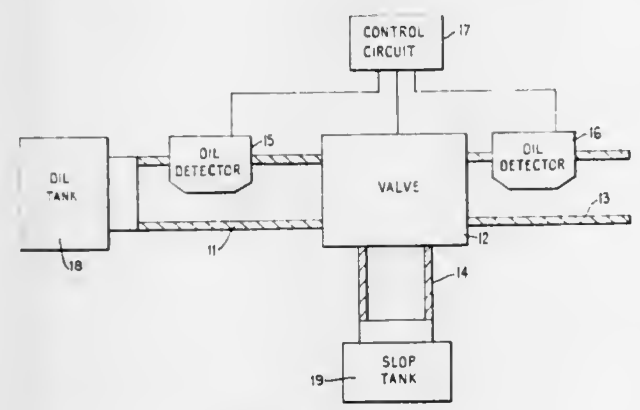

1. A discharge system for a tank containing an oil and water mixture, said system comprising: an oil tank; a valve having an inlet and first and second outlets; a first conduit connected between said oil tank and said valve inlet; a first detector having an output lead, said first detector being fixed in said first conduit and constructed to produce a course output signal on said output lead thereof in accordance with the amount of oil present within said first conduit; a control circuit having a first lead connected from said first detector output lead, and a second lead connected to said valve; a slop tank; and a second conduit connected from said first valve outlet to said slop tank, said control circuit causing the fluid in said first conduit to pass through said first valve outlet when the oil within said first conduit is above a first predetermined threshold level wherein a third conduit is connected from said second valve outlet, a second detector having an output lead connected to said control circuit, said second detector being mounted within said third conduit to produce a fine output signal on said output lead thereof in accordance with the amount of oil present within said third conduit, said control circuit controlling the rate of discharge through said third conduit, said second detector being more sensitive than said first detector.

4,064,894
VACUUM REDUCER VALVE
George C. Ludwig, Troy, Mich., assignor to The Bendix Corporation, South Bend, Ind.
Continuation of Ser. No. 520,325, Nov. 4, 1974, abandoned. This application May 10, 1976, Ser. No. 684,597
Int. Cl.^{2} G05D *11/00;* **F02P** *5/04*
U.S. Cl. 137—116.5 **4 Claims**

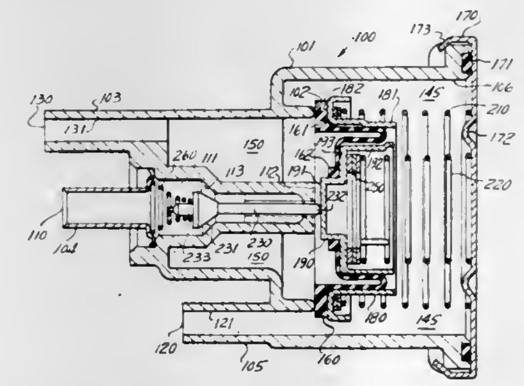

1. In a vacuum reducer valve:
a housing defining a chamber therewithin and having an inlet, an outlet, and a vent communicating with said chamber;
normally open valve means controlling communication through said vent;
normally closed valve means within said chamber dividing the latter into an inlet section communicating with said inlet and an outlet section communicating with said outlet and with said vent;
pressure differential responsive means including a first portion responsive to the pressure differential between said sections for closing said normally open valve means and thereby preventing communication through said vent when the pressure level in said inlet section drops below the pressure level in said outlet section by a first predetermined amount;
said pressure differential responsive means including a second portion responsive to the pressure differential between said sections for opening said normally closed valve means and thereby communicating said inlet and outlet sections when the pressure level in said inlet section drops below the pressure level in said outlet section by a second predetermined amount, said second predetermined amount being greater than said first predetermined amount whereby said normally open valve means is closed to prevent communication through said vent before said normally closed valve means is opened;
said normally open valve means including a valve seating area associated with said vent, a valve poppet associated with said seating area and having an actuating member extending into said chamber and spring means yieldably urging said valve poppet toward said valve seating area;
said first portion of said pressure differential responsive means including a retainer slidable in said chamber and responsive to the pressure differential between said sections, and resilient means urging said retainer toward said actuating member, said resilient means being stronger than said spring means so that said retainer acting through said actuating member urges the poppet away from the valve seating area when the pressure differential is less than the predetermined amount.

4,064,895
NON-SIPHONING FLOAT CONTROLLED VALVE ASSEMBLY
Arden L. Borgen, and Cleon C. Merrill, both of Webster City, Iowa, assignors to Arrow-Acme Corporation, Webster City, Iowa
Filed Aug. 12, 1976, Ser. No. 713,848
Int. Cl.^{2} G05D *9/02;* **F16K** *31/18, 24/02*
U.S. Cl. 137—216 **10 Claims**

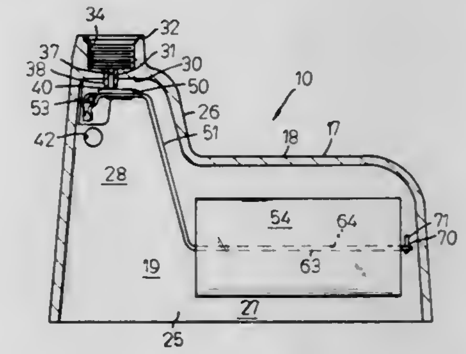

1. A non-siphoning float controlled valve assembly for attachment to a tank to control the supply of liquid from a source to the tank, to regulate the level of the liquid in the tank, and to prevent back-siphoning of liquid from the tank into the liquid supply source comprising:
a one-piece hollow housing having an integrally formed upwardly extending hollow neck near one end thereof, said housing being open at the bottom and defining a float chamber and said neck defining a fill passage and having an upper end;
a liquid fill inlet opening near said upper end of said neck for communicating between said liquid supply source and said fill passage;
a valve seat surrounding said liquid fill inlet opening;
at least one anti-siphon hole extending through said neck below said liquid fill inlet opening;
a float support lever having an upper end and a lower end and extending between said fill passage and said float chamber;
means for pivotally connecting said upper end of said lever to said neck in said fill passage, said means for pivotally connecting said upper end of said lever to said neck comprising at least one pivot pin hole extending through said neck, at least one pivot pin hole through said lever near said upper end thereof, and a pin extending through both said pivot pin holes;
a float disposed in said float chamber and connected to said lower end of said float lever; and
a resilient member connected to said support lever for cooperation with said valve seat to open and close said liquid fill inlet opening in response to pivotal movement of said float support lever and said float.

4,064,896
VACUUM BREAKERS
John Trenary, Fort Collins, Colo., assignor to Teledyne Industries, Inc., Fort Collins, Colo.
Filed Jan. 19, 1976, Ser. No. 650,118
Int. Cl.^{2} F16K *15/04*
U.S. Cl. 137—218 **2 Claims**

1. A vacuum breaker comprising:
a first tubular housing portion having an outwardly facing inlet coupling that opens into an interior bore in which is defined an inwardly-facing first valve seat;
a second tubular housing portion having an outlet coupling facing outwardly and opposite said inlet coupling, said first and second portions being joined together to define a fluid flow path between said inlet and outlet couplings and an interior chamber surrounding said fluid flow path with an interior wall of said chamber defining a second valve seat facing inwardly and toward said first valve seat;

means defining at least one opening from said chamber through said second valve seat to the exterior of said second portion;

a first valve member free-floatingly disposed in said bore and sealingly engageable with said first valve seat upon the flow of fluid toward said inlet coupling from either of said outlet coupling and said opening;

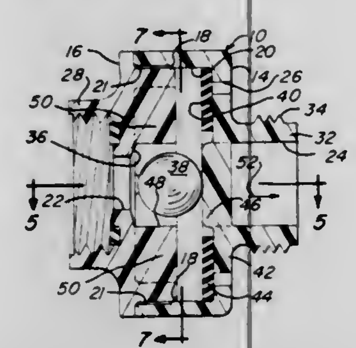

and a second valve member free-floatingly disposed in said chamber in a position exclusive of said fluid flow path and sealingly engageable with said second valve seat in response to the flow of fluid from said inlet coupling to said outlet coupling.

4,064,897
TIRE FILLER VALVE ARRANGEMENT
Rudiger Weber, Neureut, Germany, assignor to Firma Dr. Ing. h.c.F. Porsche AG, Germany
Filed Dec. 12, 1975, Ser. No. 640,180
Claims priority, application Germany, Dec. 12, 1974, 2458729
Int. Cl.² F16K *15/20*
U.S. Cl. 137—224 **8 Claims**

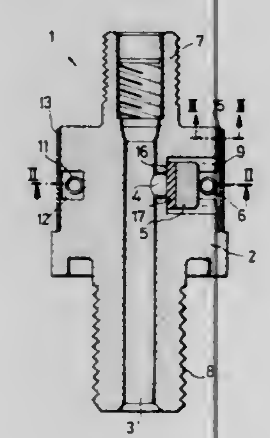

1. A valve arrangement for filling a tire with air, the arrangement comprising: a valve body, a first passage means for communicating said first passage means with the environment, a valve means including a valve plunger disposed at said second passage means for selectively controlling the communication between said first passage means and the environment, said valve means having a first closed position and a second open position, at least one cylindrical helical spring of circular cross-section disposed about a periphery of said valve body and engaging said valve plunger for normally biasing said valve plunger into said closed position, an annular recess means provided about the periphery of said valve body for receiving said cylindrical helical spring, said cylindrical helical spring having a spring characteristic corresponding to a desired inflation value of a vehicle tire whereby, upon the air in a vehicle tire exceeding the desired inflation value, said valve plunger is displaced to said open position against the bias of said cylindrical helical spring to communicate said first passage means with the environment thereby expelling excess air from a vehicle tire, and wherein at least one channel means is provided along at least a portion of the periphery of said valve body extending in an axial direction of the valve body, said channel means communicating with said second passage means whereby the excess air is expelled from a tire through said channel means.

4,064,898
PURGE AND CHARGE EQUIPMENT
Virgil F. Petersen, Cincinnati, Ohio, and Willard L. Skirvin, Rochester, Mich., assignors to Cincinnati Electronics Corporation, Cincinnati, Ohio
Filed Mar. 24, 1976, Ser. No. 670,022
Int. Cl.² B08B *5/00*
U.S. Cl. 137—240 **18 Claims**

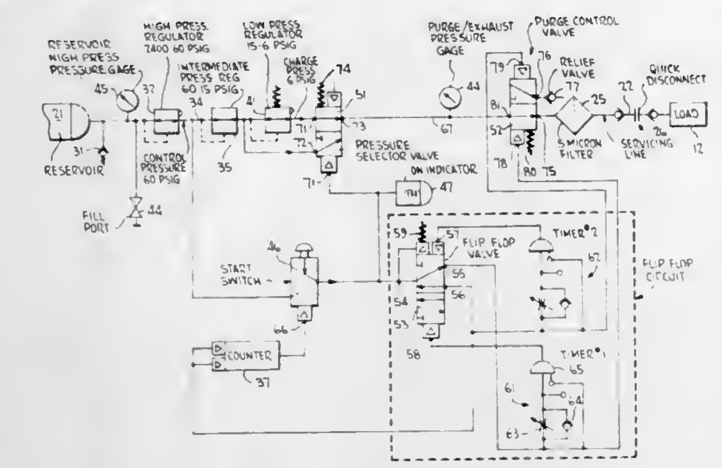

1. Apparatus for scrubbing contamination from a sealed container and for charging the scrubbed container with a gas comprising a relatively high pressure source of said gas, pneumatic signal responsive valve means coupled between the source and the container for selectively (a) applying gas from the source to the container and (b) venting the container in response to a pneumatic signal, pneumatic logic means responsive to the source of the gas for sequentially deriving a preselected number of pneumatic signals that control applying of the gas and venting the container, said valve means being constructed so as to sequentially supply and exhaust a flow of gas from the source into and out of the chamber in response to each of said signals to thereby scrub contamination in the container, said logic means further including means for deriving a further pneumatic signal in response to an indication that a scrubbing cycle of the container has been completed, and means responsive to the further pneumatic signal for activating the valve means to apply charging gas at a predetermined pressure from the source to the container.

4,064,899
CONTROL AND SIGNAL ARRANGEMENT FOR RESPIRATORS
Klaus Dieter Lehmann, Cologne-Deutz, Germany, assignor to Kurt Matter GmbH K.G., Germany
Filed Nov. 13, 1975, Ser. No. 631,651
Claims priority, application Germany, Nov. 13, 1974, 2453734
Int. Cl.² F16K *37/00*
U.S. Cl. 137—269 **53 Claims**

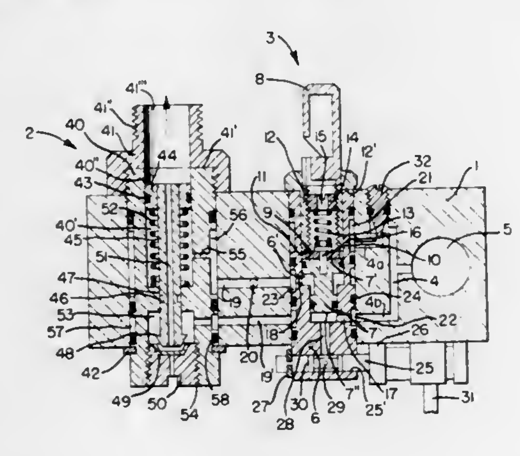

1. A control arrangement for controlling a compressed fluid respirator in which a compressed fluid is fed from a compressed fluid reservoir to a dosing valve, the arrangement comprising: a pressure reducing means for reducing a fluid inlet pressure from the compressed fluid reservoir to an intermediate or back pressure, a fluid pressure supply block means, receiving means provided in said supply block means for receiving said pressure reducing means including at least one first bore extending through said supply block means, said pressure reducing means being fashioned as an independent module and including a housing means inserted in said at least one first bore, said receiving means and said pressure reducing means having a substantially identical cross-sectional configuration, fastening means for selectively fastening said pressure reducing means in said supply block means, said pressure reducing means including at least one radial bore terminating in a continuous groove extending around the housing means for communicating said pressure reducing means with said supply block means, and wherein said supply block means includes at least one supply bore communicating with said continuous groove.

4,064,900
NON-RISE FAUCET ASSEMBLY
William C. Schmitt, Milwaukee, Wis., assignor to Milwaukee Faucets, Inc., Milwaukee, Wis.
Filed Oct. 26, 1976, Ser. No. 735,595
Int. Cl.² F16K *11/20*
U.S. Cl. 137—315 **6 Claims**

1. A non-rise faucet comprising a shank having a lower end through which fluid is introduced and also having an upper end including a stem chamber and communicable with said lower end for the reception of fluid therefrom, an elongated and removable stem slideable into said chamber and having a lower end forming a movable valve in said chamber to permit regulated flow of water through said faucet upon rotation of said stem in said chamber, said upper end of said shank having a slot arranged generally transverse to said elongated stem, said stem having a radial shoulder adjacent its upper end for alignment with said transverse slot, and a removable retainer clip having a portion slideably engaged in said transverse slot, said portion having a recess for embracing and engaging the upper end of said stem when said clip is inserted in said transverse slot, said clip also having a bevelled edge at one side thereof for engagement with said shoulder when said clip is initially inserted in said slot, whereby further engagement of said clip into said slot causes said shoulder and stem to be pushed downwardly in said shank for operative engagement of said valve, said clip when inserted in said transverse slot preventing longitudinal movement of said elongated stem.

4,064,901
GASOLINE SUPPLY ACCESSORY
David P. Bailey, Milton, Canada, assignor to The Raymond Lee Organization, Inc., New York, N.Y.
Filed Oct. 4, 1976, Ser. No. 729,123
Int. Cl.² B60R *27/00*
U.S. Cl. 137—351 **4 Claims**

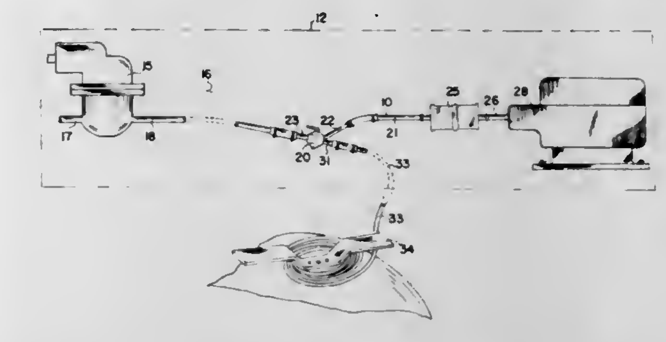

1. An accessory device adaptable for attachment to the gasoline supply system leading to the engine of a vehicle so as to serve as a source of gasoline to a tank exterior of the attached vehicle, consisting of

a flexible hose fitted by a tee connector to the gasoline line in a vehicle, said tee connector mounted in the tubing of the vehicle joining the fuel pump to the carburetor, and

valve means to regulate the flow of gasoline through said hose.

4,064,902
CURB BOX
John Gordon Swenson, 1210 Beaver Drive, Erie, Pa. 16509
Filed June 30, 1976, Ser. No. 701,288
Int. Cl.² F16L *5/00*
U.S. Cl. 137—370 **2 Claims**

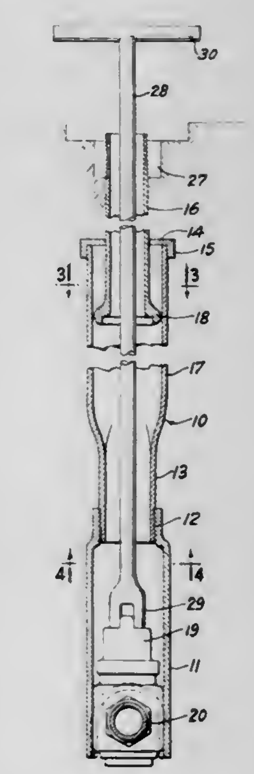

1. A curb box saddle comprising,

a hollow, cylindrical, open-bottomed base housing made of unitary cast material and adapted to rest on a water main having a valve,

the lower end of said base housing being adapted to receive said valve,

pipe means on the upper end of said base housing formed into an oval shape having a major diameter and a minor diameter, means securing said pipe means to said base housing

a stand pipe slidably received in said pipe means,

said stand pipe having a diameter approximately equal to the said minor diameter of said pipe means,

said stand pipe having outwardly extending ears on its lower

end extending outwardly a distance approximately equal to said major diameter,
and a cap separate supported on the upper end of said pipe means,
said cap having a downwardly extending flange receiving the upper end of said pipe means,
a central hole in said cap slidably receiving said upper stand pipe.

4,064,903
NOISE ENCLOSURE FOR HYDRAULIC VALVE
John E. Soulsby, Mentor, and Richard J. Malecha, Cleveland, both of Ohio, assignors to Towmotor Corporation, Mentor, Ohio
Filed July 6, 1976, Ser. No. 702,546
Int. Cl.^{2} F16K *51/00*
U.S. Cl. 137—375 4 Claims

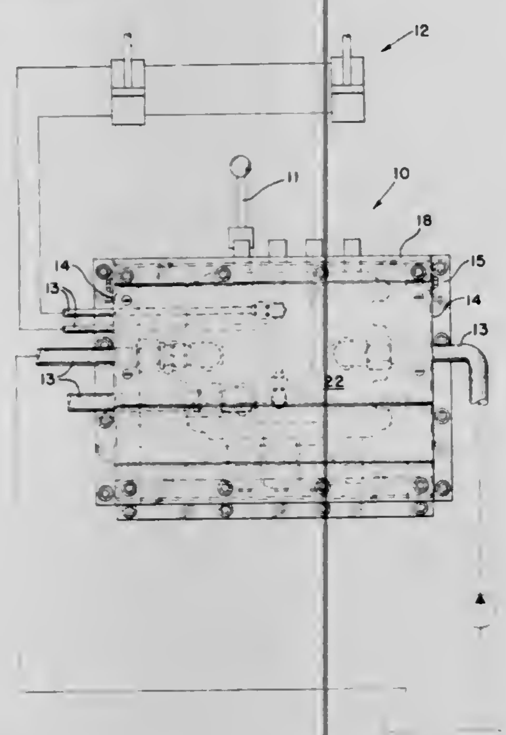

1. A noise attenuating enclosure for a valve having protruding fluid lines and control apparatus, said enclosure comprising; a top member, a bottom member, a pair of oppositely facing spaced-apart side members extending between said top and bottom members and forming therewith a box-like structure, a cover member having first and second flanges for removably attaching said cover member to said side members, sound attenuating lining means associated with each of said top member, bottom member, side members and cover member for substantially reducing the transmission of valve noise through said members, wherein access gaps are provided between said side members and said cover member for the accommodation of said fluid lines, and further including fitted plug means of sound barrier material for sealingly filling said access gaps except for the space taken by said fluid lines.

4,064,904
WASHERLESS CARTRIDGE VALVE FOR FAUCETS
Julius L. Tolnai, Los Angeles, Calif., assignor to Price Pfister Brass Mfg. Co., Pacoima, Calif.
Filed Apr. 30, 1976, Ser. No. 682,180
Int. Cl.^{2} F16K *25/00*
U.S. Cl. 137—454.5 7 Claims

1. In a valve structure for a plumbing fixture or the like:
a. means forming a valve body having an inlet port and an outlet passage;
b. a hollow sealing member made of flexible material confined against the body and having a first opening registering with said body inlet port, said sealing member having a second opening entirely surrounded by a flexible lip capable of deflecting inwardly of the sealing member;
c. closure means having a head;
d. means guiding said closure head for movement in a path substantially parallel to the axis of said second opening to engage said lip near the said second opening so that said lip deflects upon engagement between said lip and said closure head;
e. said body outlet passage and said second sealing member opening being in communication when said closure head is away from said sealing member;

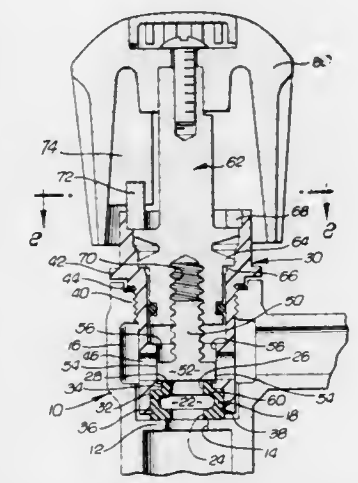

f. means independent of said sealing member for limiting movement of said closure head beyond initial engagement with said sealing member; and
g. the supply pressure inside said sealing member urging said lip into said engagement with said closure head while said lip is free of high compressive stress.

4,064,905
APPARATUS FOR MAINTAINING CONSTANT MASS FLOW
Allan Elvir Nilsson, Tomelilla, Sweden, assignor to Stifab AB, Jonkoping, Sweden
Filed Apr. 21, 1976, Ser. No. 679,058
Claims priority, application Sweden, Apr. 29, 1975, 7504969
Int. Cl.^{2} G05D *7/01*
U.S. Cl. 137—499 6 Claims

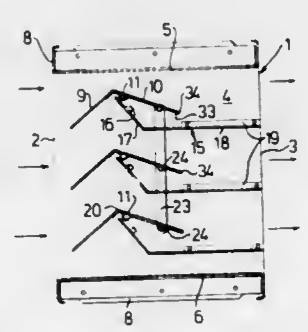

1. An apparatus intended for placing in the path of a fluid flow, e.g. an airstream to maintain a substantially constant mass flow in the flow path downstream of the apparatus independent of pressure alterations in the flow path upstream of the apparatus, said apparatus comprising a regulator housing (1) with a fluid inlet (2) to which the flow path upstream of the apparatus is connected, a fluid outlet (3) to which the flow path downstream of the apparatus is connected and a plurality of throughput passages in the housing, extending from the inlet to the outlet, in said passage, there being arranged a plurality of movable damper elements (7) operable from outside the housing, the adjustment of which causes alteration of the throughput cross-sectional area of the passages, each damper element comprising a damper blade (7), angular in cross section, and having a substantially planar forward blade portion (9) and a substantially planar rear blade portion (10) connected thereto which forms an obtuse angle with the forward blade portion, each said damper blade being carried by and attached to a damper shaft (11) pivotally mounted in the housing and extending transversely through the passage, whereby the

throughput cross-sectional area is determined primarily by the size of a gap (35) between each rear blade portion (10) and a first, fixed wall portion in an adjacent passage, and secondarily by an intermediate space (36) between each forward blade portion (9) and a second fixed or movable wall portion in an adjacent passage and that the damper blade position in the passages is determined by the torque equilibrium about the damper shafts resulting from the fluid forces generated by the fluid mass flow on the forward and rear blade portions, and a torque with which the damper shafts are affected by an adjustable mass body system (14) carried by and acting on a counterweight neck (13) interconnected with the damper shafts and projecting outwardly from the outside of the housing, a baffle plate (15) mounted transverse to the passage and attached to the housing for each damper blade (7), the baffle plate extending between the parallel side walls (4) of the passage, and extending with a planar, forward plate portion (17) in the flow direction from the region of the damper blade shaft (11) down to a line parallel with this shaft beneath and downstream of the shaft, from which line the plate continues outwards with a planar rear plate portion (18) parallel to the top (5) and bottom (6) walls of the passage towards the fluid outlet (3).

4,064,906
VALVE FOR WATER PIPES
Lennart Gustaf Berg, Fylgiavagen 1, S-182 64 Djursholm, Sweden
Filed Aug. 14, 1974, Ser. No. 497,271
Claims priority, application Sweden, Aug. 28, 1973, 7311664
Int. Cl.^{2} F16K *15/00*
U.S. Cl. 137—529 3 Claims

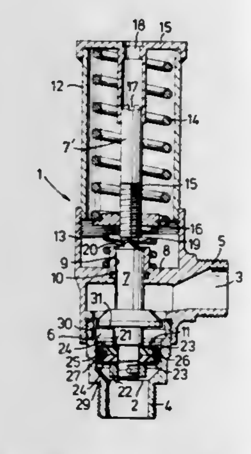

1. A fluid pressure relief valve, comprising:
a. a housing having an inlet opening leading to a through-flow chamber which communicates with an outlet opening, at least a part of said through-flow chamber being a valve seat in the form of a cylindrical wall surface;
b. a spindle slidably guided by said housing for movements in a direction parallel to the axis of said cylindrical wall surface;
c. a piston secured to said spindle for movements along the length of said cylindrical wall surface and having a peripheral seal normally forming a fluid seal therewith, said piston being movable therealong in response to normal variations in fluid inlet pressure, said piston being movable axially beyond said cylindrical valve seat in response to a predetermined excessive fluid inlet pressure to fluidly connect said inlet opening to said outlet opening, said peripheral seal comprising a rigid annular support core of metal, enclosed by a resilient sleeve casing rotatable thereon, whereby as said piston moves along said seat, said casing rolls along said cylindrical wall and rotates about its core;
d. a first preloaded spring acting between said housing and said spindle and biasing said piston in a direction away from said seat; and
e. a second preloaded spring acting between said housing and said spindle and biasing said piston in a direction toward said seat with a greater force sufficient to override said first spring to maintain said fluid seal during said normal variations.

4,064,907
FILL LIMITING FILLER VALVE UNIT
Evans R. Billington, Glenview, and Robert J. Batka, Chicago, both of Ill., assignors to Rego, Chicago, Ill.
Filed Sept. 30, 1976, Ser. No. 728,038
Int. Cl.^{2} F16K *35/00, 33/00*
U.S. Cl. 137—614.2 9 Claims

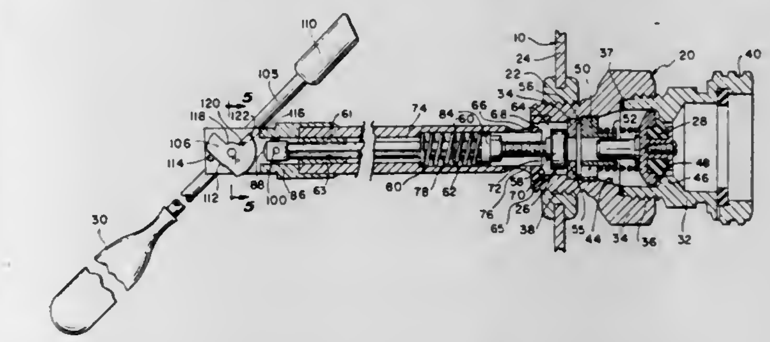

1. A fill limiting filler valve assembly for a liquefied petroleum gas service tank comprising:
a filler valve housing extendable through the wall of a storage tank and pivotally supporting a cam means at the liquid fill limit of the tank and including a normally closed filler backflow check valve for connection to a pressure filler hose in sealed relation and having a valve member coacting with an inlet port to open under inflowing liquid filling pressure;
fill control means having spaced inner and outer open valve ports with a valve chamber between them through which the replenishing liquid flows;
valve means in said chamber including a valve head and valve stem mounted in said housing for reciprocating the valve head in said chamber to obstruct selectively free flow of liquid through said inner and outer ports;
resilient means urging said valve means to open said inner port in the direction counter to the pressurized inflow;
liquid level responsive means including a float pivotally mounted upon said housing and a cam follower on said valve stem coacting with the cam means when the fill level limit of the tank is approached;
said cam means having a cam surface engaged by said follower to hold said valve means in a full flow open position with respect to said inner port during filling operation, said follower moving from said cam surface into the cam relief recess when the fill limit of the tank is reached to permit flow through said inner valve port to be obstructed by said valve head in the direction of flow under inflowing filling pressures;
bleed means for equalizing pressures on opposite sides of said inner valve when closed against its port; and
said resilient means urging said inner valve to open and retract said follower upon equalization of pressures on opposite sides of said inner valve port.

4,064,908
COMBINATION NEEDLE FLOW CONTROL AND SHUT-OFF VALVE FOR PRECISION INSTRUMENTS
Winston C. Loe, 4851 Del Monte Road, La Canada, Calif. 91011
Filed Apr. 5, 1976, Ser. No. 673,753
Int. Cl.^{2} F16K *1/04*
U.S. Cl. 137—614.17 8 Claims

1. A combination needle flow control and shut-off valve for precision instruments comprising a body, an elongated opening formed within said body, separated inlet and outlet passages connected with said opening, an elongated cartridge screw threadedly mounted in said body opening for longitudinal movement within said opening to open and close the connec-

tion between said inlet and outlet passages, said cartridge having an opening therein connecting said inlet and outlet passages when said cartridge is disposed in open position, an elongated needle member screw threadedly mounted within said cartridge for longitudinal movement within said cartridge, said needle member having a tapered needle longitudinally movable within said opening in said cartridge for precisely controlling the flow of fluid between said inlet and outlet passages, means connected to the outer ends of said cartridge and needle member for rotating and longitudinally moving said members independently from each other, so that said cartridge may be moved between open and closed positions to turn the

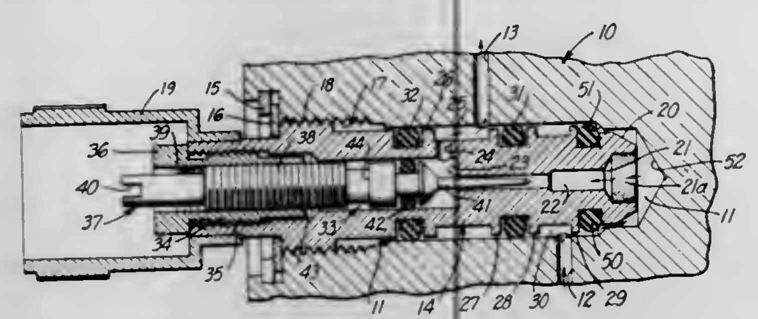

flow of fluid through the valve completely on and off without affecting the precision flow control setting of said needle, an O-ring mounted adjacent to the end of said cartridge surrounding said cartridge, an inwardly extending portion of said body disposed adjacent to said O-ring, said O-ring being adapted to be compressed into sealing engagement with said inwardly extending portion of said body upon inward movement of said cartridge to close off the connection between said inlet passage and said outlet passage, said cartridge having an inner end engageable with the inner end of said body opening after said O-ring has made sealing engagement with said body to limit further inward movement of said cartridge.

4,064,909
SLIDE VALVE APPARATUS
Theodore C. Neward, c/o Neward Enterprises, 976 W. 9th St., Upland, Calif. 91786
Continuation-in-part of Ser. No. 377,801, July 9, 1973, abandoned. This application Oct. 28, 1975, Ser. No. 626,119
Int. Cl.² F16K *3/316*
U.S. Cl. 137—625.48 **12 Claims**

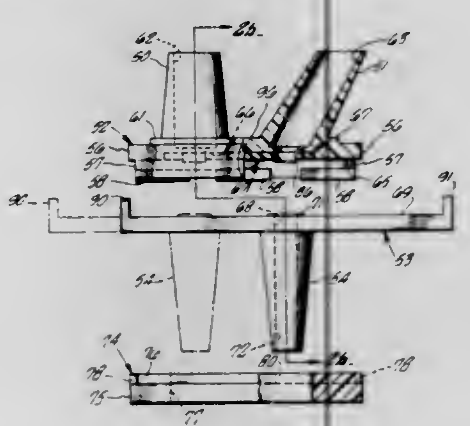

3. A slide valve for control of contaminable fluids, comprising
- a body means defining a flat guideway open at its extremities, and having confronting wall surfaces, one of the wall surfaces having an elongated slot, the opposed wall surface having a shallow depression at least coextensive with the slot,
- a resilient sealing plate received in the depression and forming a sealing surface essentially coplanar with the wall surface surrounding the depression,
- a slider slidably received in the guide passage disposed in sealing engagement with the sealing plate,
- the sealing plate having at least one perforation therethrough,
- the body means having at least one tube defining a flow passage in registry with the perforation,
- the slider having at least one tube extending through the elongated slot in the body means and defining a flow passage having an end in sealing engagement with the sealing plate and movable between a position in registry with the perforation therein for flow of fluid through the slide valve, and a position closed by the sealing plate, and
- the sealing plate being in sealing engagement with and covered by the surface of the depression, and being completely covered by the slider in all positions thereof, thereby to isolate the entire sealing plate from extraneous contamination; and the margins of the perforation being sealed with respect to the body means and the slider in both open and closed positions to prevent leakage into or out of the tube passages.

4,064,910
FLUID CONTROL VALVE
Gottfried Weisenberger, Mainz, Germany, assignor to Effbe-Werk Fritz Brumme & Co. KG, Raunheim, Germany
Filed June 8, 1976, Ser. No. 693,777
Claims priority, application Germany, June 10, 1975, 2525763
Int. Cl.² F16K *11/14*
U.S. Cl. 137—627.5 **8 Claims**

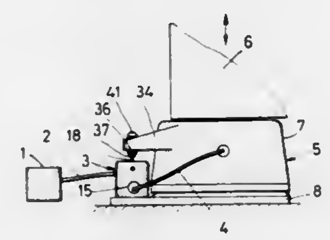

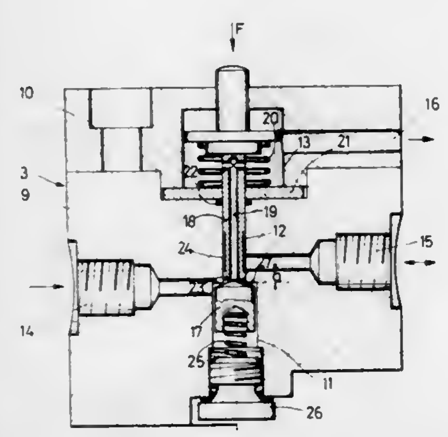

1. A control system for controlling the supply of pressurized fluid to a working element, such as a pneumatic spring, which valve comprises a housing having a bore comprising first and second bore sections with a middle bore section of smaller diameter between the first and second bore sections; a first passage in the housing for connection to a source of said pressurized fluid and communicating with said first bore section; an outlet opening in the housing and communicating with said second bore section; a second passage in the housing for connection to said working element and communicating with said middle bore section; a valve stem sealingly guided in said middle bore section and displaceable in accordance with a controlled variable of said working element, the valve stem having a duct therethrough communicating at one end with said second bore section; a valve closure member which is slidably guided in said first bore section towards the said valve stem and towards a shoulder at the boundary between said first and middle bore sections, the closure member having seating means for closure of said duct in said valve stem and for seating against said shoulder; the said seating means of said closure member being movable away from said shoulder to open a path for conduction of the pressurized fluid from said first to said middle bore section along the surface of said middle bore section; a throttle

in said conduction path, which throttle is operative in dependence upon the position of the valve stem, the throttle being operative for a small deviation of said controlled variable from a datum, but being inoperative for a large deviation, the end of said valve stem remote from said valve closure member being urged by spring pressure against an abutment which is adjustably attached to said working element; and said abutment being subject to a spring pressure which limits the control range in one direction.

4,064,911
HYDRAULIC FLUID RESERVOIR FOR A CLOSED HYDRAULIC SYSTEM
David E. Albrecht, 1383 Granary Road, Blue Bell, Pa. 19422
Filed Nov. 17, 1976, Ser. No. 742,584
Int. Cl.² F16L *55/04*
U.S. Cl. 138—30 **12 Claims**

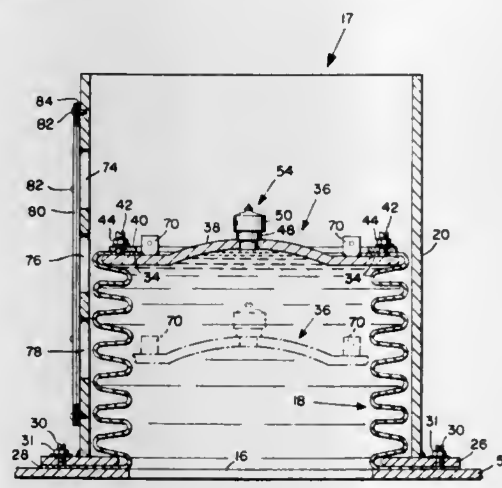

1. In combination with a hydraulic fluid reservoir for a closed hydraulic system including a pump the improvement comprising:
- a substantially vertically oriented air-tight bellows of substantially uniform cross-section and having open upper and lower ends,
- air-tight means including an opening in the top of the reservoir to secure the bellows above the reservoir with substantially the entire cross-section of its lower end in communication with the top of the reservoir,
- a cover closing off the upper end of the bellows,
- a fill inlet secured to the cover and communicating with the interior of the bellows for filling the reservoir and bellows with hydraulic fluid,
- a removable cap for the fill inlet,
- substantially vertical guide means to guide the bellows in substantially vertical movement, and
- mechanical locking means for holding the bellows in an upwardly expanded position for filling and degassing the hydraulic fluid.

4,064,912
GAS MAIN STOPPER
Joseph A. Petrone, 14 Edith St., Old Tappan, N.J. 07675
Filed Nov. 5, 1975, Ser. No. 628,984
Int. Cl.² F16L *55/10, 55/12*
U.S. Cl. 138—94 **1 Claim**

1. A gas main stopper including a tubular housing insertable into a valve housing for receiving a tapping machine and seatable in gas-tight condition at one end upon a portion of a gas main provided with an opening, a slidable tubular rod extending into said tubular housing through the other end of the tubular housing, a stopper body in contracted condition located in said tubular housing and connected to one end of and supported by said tubular rod for introduction into the main through said opening therein and expansible within the main to stop the flow the gas therethrough, first means at said other end of the tubular housing forming a gas-tight closure for said tubular housing and a gas-tight slide guide for said tubular rod, first actuating means connected to said tubular rod outside of said housing for slidably moving said tubular rod in said first means, second means extending into said tubular rod through the other end of such rod and connected to said stopper body, second actuating means connected to said second means outside of said tubular rod for expanding said stopper body, and third means at said other end of said tubular rod forming a gas-tight closure for said tubular rod and a gas-tight joint with said second means, said first actuating means being operable to slidably advance said tubular rod toward the seated end of said housing to transfer said stopper body from said tubular housing

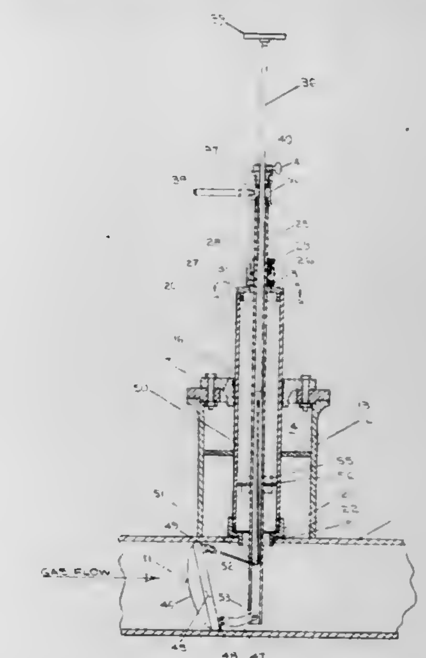

and into said main through the opening in the main, and said second actuating means being operable to retract said second means from said one end of the tubular rod to effect the expansion of said stopper body within the main, said first means being provided with a vent hole for the escape of gas from within said tubular housing and into a venting pipe, and a gas-tight plug normally closing the vent hole, a vent pipe mounted on said other end of said tubular housing and forming an outward extension of the latter, and a coupling enclosing said first means and the vent hole thereof and connecting the adjoining ends of said tubular housing and vent pipe together in gas-tight relation.

4,064,913
FLEXIBLE REINFORCED HOSE AND METHOD OF MAKING THE SAME
Wayne Scott Busdiecker, Stow, and Harold Henry Seymour, North Canton, both of Ohio, assignors to Parker-Hannifin Corporation, Cleveland, Ohio
Filed Oct. 4, 1976, Ser. No. 729,387
Int. Cl.² F16L *11/00;* **C09J** *5/02*
U.S. Cl. 138—125 **13 Claims**

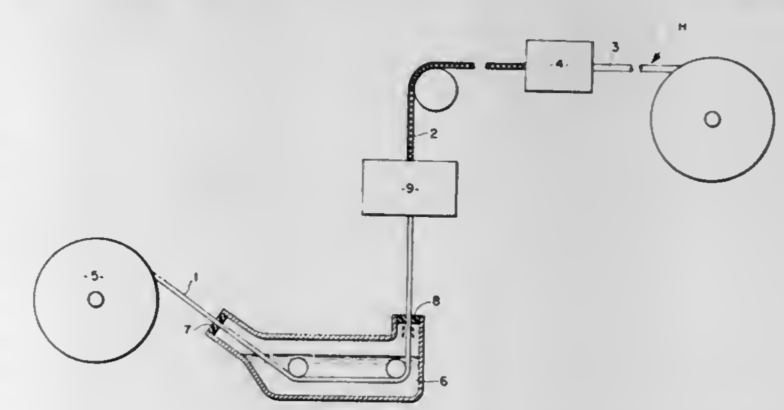

1. The method of making a flexible reinforced hose comprising passing nylon tubing through a heated meta-cresol bath effective to plasticize the outer surface of the tubing; wiping

off excess meta-cresol from the tubing as it emerges from the bath; and applying a reinforcement of a synthetic or natural fiber to the wiped plasticized surface of the tubing thus to bond the inner surface of the reinforcement to the tubing.

8. A flexible reinforced hose comprising a nylon core tube having an outer surface plasticized by immersion in a heated meta-cresol bath and wiped to remove excess meta-cresol; and a reinforcement of a synthetic or natural fiber bonded to the plasticized and wiped surface of said core tube.

4,064,914

POROUS METALLIC LAYER AND FORMATION

Andrew Campbell Grant, Williamsville, N.Y., assignor to Union Carbide Corporation, New York, N.Y.

Continuation of Ser. No. 467,936, May 8, 1974, abandoned, which is a division of Ser. No. 74,131, Sept. 20, 1970, Pat. No. 3,821,018, which is a continuation-in-part of Ser. No. 865,512, Oct. 10, 1969, abandoned. This application Nov. 23, 1976, Ser. No. 744,416

Int. Cl.² F28F *13/18*; F16L *9/14*; F28F *21/08*

U.S. Cl. 138—142 **2 Claims**

1. As an article of manufacture, a copper base material tube of grain size below approximately 0.05 mm. and a porous layer less than 0.125 inch thick on at least one surface of said tube comprising metal particles wherein said particles are of a material selected from the group consisting of copper, copper alloy and steel of 30–500 mesh size in random stacked relation as a uniform structure with interstitial and interconnected pores between adjacent particles having equivalent pore radii of below approximately 7.5 mils, said particles being brazed together and to the tube surface by a bonding metal alloy consisting of approximately 56% silver, 22% copper, 17% zinc, and 5% tin by weight, having a melting point below 1500° F.

2. As an article of manufacture, a copper base material tube of grain size below approximately 0.05 mm. and a porous layer less than 0.125 inch thick on at least one surface of said tube comprising metal particles wherein said particles are of a material selected from the group consisting of copper, copper alloy and steel of 30–500 mesh size in random stacked relation as a uniform structure with interstitial and interconnected pores between adjacent particles having equivalent pore radii of below approximately 7.5 mils, said particles being brazed together and to the tube surface by a bonding metal alloy consisting of 25–95 weight % antimony, 5–75 weight % copper, comprising 10–30 weight % of the metal particle - metal alloy total and having a melting point below 1500° F.

4,064,915

REINFORCEMENT OF RESILIENT ARTICLES

Noel Buyssens, Bossuit, and Germain Verbauwhede, Zwevegem, both of Belgium, assignors to N.V. Bekaert S.A., Zwevegem, Belgium

Filed May 24, 1976, Ser. No. 689,369

Claims priority, application United Kingdom, May 6, 1975, 24291/75

Int. Cl.² D03D *15/02*

U.S. Cl. 139—425 R **18 Claims**

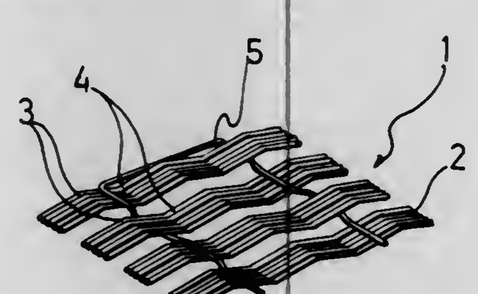

1. A woven fabric for reinforcing a resilient material, wherein the warp of the fabric consists of substantially unstranded wires held together in spaced groups by the weft of the fabric, at least some of said wires being formed with a set so as to have undulations along their length, and wherein the amplitude of the undulations along their length, and wherein the amplitude of the undulations is substantialy perpendicular to the general plane of the fabric.

4,064,916

ARRANGEMENT FOR INTERMITTENT FEEDING OF CABLE COILS ARRESTING ON A DISTRIBUTION CONVEYOR

Hans Peter Dahmen, Wipperfurth, Germany, assignor to Bergmann Kabelwerke AG, Wipperfurth, Germany

Filed May 19, 1975, Ser. No. 578,784

Claims priority, application Germany, May 18, 1974, 2424281

Int. Cl.² B21F *23/00*

U.S. Cl. 140—2 **7 Claims**

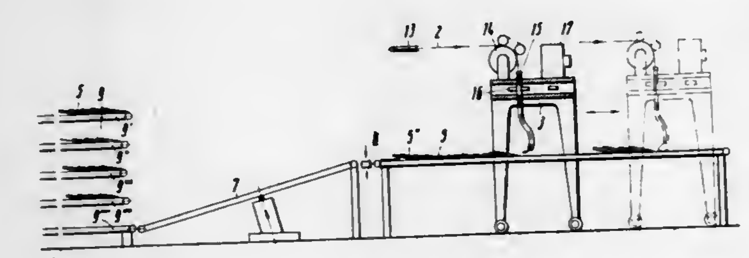

1. An apparatus for intermittent feeding of cable coils cut by means of a cutting arrangement comprising a ring laying unit disposed in feeding relationship to a first discharge conveyor, said ring laying unit being movable with respect to said first discharge conveyor in the ring laying direction during operation, said first discharge conveyor disposed in facing relationship to a cutting unit and terminating in a transport unit, said transport unit selectively in feeding relationship to one of several separately driven conveyor bands.

4,064,917

APPARATUS FOR CUTTING AND FORMING FLEXIBLE BEAM LEADS OF AN INTEGRATED CIRCUIT CHIP

Nelson Ramon Diaz, Phoenix, Ariz., assignor to Honeywell Information Systems Inc., Pheonix, Ariz.

Filed Oct. 18, 1976, Ser. No. 733,557

Int. Cl.² B21F *1/00*

U.S. Cl. 140—105 **17 Claims**

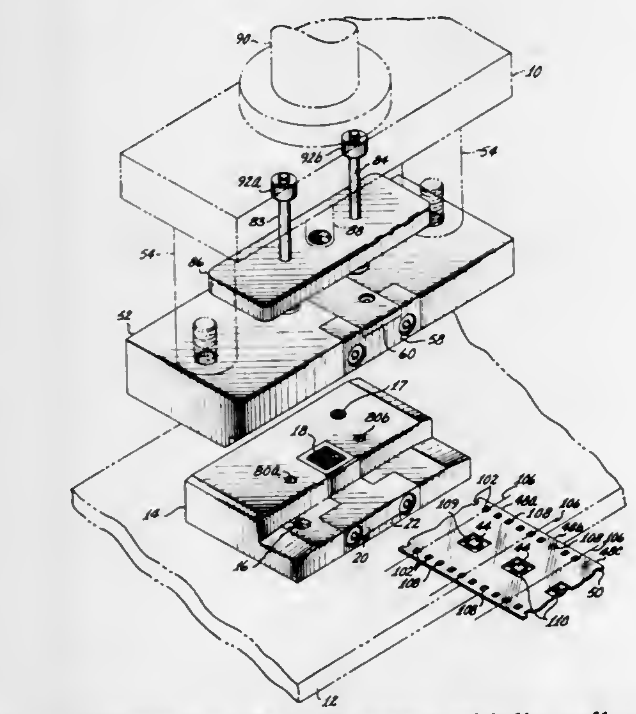

1. In combination: die wall means, said die wall means having a planar upper surface and contiguous inner surfaces substantialy perpendicular to the upper surface, the inner surfaces of the die wall means forming a die recess, the intersections of the upper surface and the inner surfaces defining continuous die cutting edges lying in a die cutting plane, said die wall means adapted to be mounted on the base plate of a punch press;

a forming block removably mounted in the die recess; said forming block having an upper surface and contiguous outer surfaces, continuous forming edges positioned substantially at the intersections of said outer surfaces and the upper surface, the outer surfaces of the forming block being spaced a predetermind distance from the inner surfaces of the die to define a punch receiving space, the upper surface of the forming block substantially lying in the die cutting plane, and a recess formed in the upper surface of the forming block adapted to receive a work piece;

punch wall means, said punch wall means having a planar bottom surface, contiguous outer surfaces and contiguous inner surfaces, the inner and outer surfaces being substantially perpendicular to the bottom surface, the inner surfaces forming a punch recess, the intersections of the bottom surface and the outer surfaces of the punch wall means forming continuous punch cutting edges, and continuous punch forming edges positioned substantially at the intersections of the bottom surface and the inner surfaces; said punch cutting edges lying in a punch cutting plane, a portion of the punch wall means adapted to fit within the punch receiving space of the die, said punch wall means adapted to be mounted on the top plate of a punch press;

a pressure pad reciprocally mounted in the punch recess for reciprocal movement therein; and

means for exerting pressure on the pressure pad to force the pad toward the forming block, said pressure pad normally projecting below the punch cutting plane.

4,064,918

STRAP TENSION SENSING AND CUT OFF MECHANISM

Walter Pobuta, Elizabeth, and Charles Dolgos, Linden, both of N.J., assignors to Thomas & Betts Corporation, Elizabeth, N.J.

Filed Mar. 10, 1977, Ser. No. 776,489

Int. Cl.² B21F *9/02*

U.S. Cl. 140—123.6 **22 Claims**

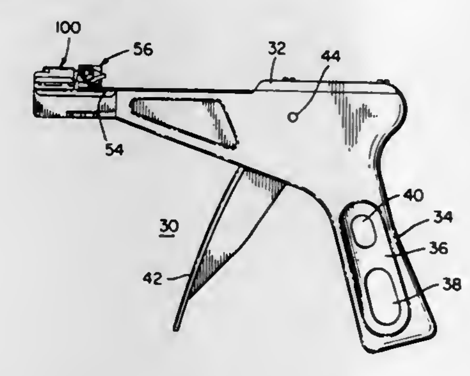

1. A strap tension sensing and cut off mechanism comprising: stationary block means having a first end and a second end and an intermediate wall intermediate said first and second ends; movable block means having a first end and a second end, said movable block means first end adjacent said stationary block means first end and said movable block means second end adjacent said intermediate wall; means for applying a force to said first end of said movable block means; pin means having a first position in engagement with said movable block means to prevent the movement of said movable block means in response to the force applied thereto and a second position out of engagement with said movable block means to permit movement of said movable block means in response to the force applied thereto; and selectively presettable means coupled to said stationary block means for applying a selected restraining force to said pin means to position said pin means in said first position; said pin means moved from said first to said second position when the force applied to said first end of said movable block means exceeds the selected restraining force upon said pin means.

4,064,919

METHOD OF FILLING DYNAMIC SCATTERING LIQUID CRYSTAL DEVICES

Herman Abraham Stern, Bridgewater; Howard Sorkin, Berkeley Heights, and Henry Claude Schindler, East Brunswick, all of N.J., assignors to RCA Corporation, New York, N.Y.

Filed Nov. 22, 1976, Ser. No. 744,128

Int. Cl.² B65B *31/00*

U.S. Cl. 141—7 **3 Claims**

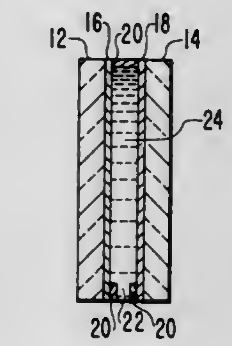

1. A method of filling a dynamic scattering liquid crystal cell comprising a layer of a liquid crystal composition having negative dielectric anisotropy containing an ionic dopant between two electrodes, said cell having a single fill port, which comprises the steps of:

evacuating said cell,

immersing said cell in a solution of an ionic dopant in a volatile solvent to fill the cell with said solution,

evaporating the volatile solvent leaving a film of said dopant on the inside walls of the cell,

evacuating said cell, and

immersing said cell in a dynamic scattering liquid crystal composition containing an ionic dopant to fill the cell.

4,064,920

TENON CUTTING MACHINE WITH CUTTING HEAD

Ernest Piche, 2 Forget St., St. Agathe, Canada

Filed Oct. 21, 1976, Ser. No. 734,736

Int. Cl.² B27F *1/08*

U.S. Cl. 144—200 **4 Claims**

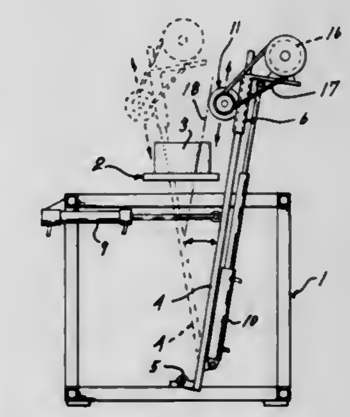

1. A tenon cutting machine for cutting a pair of opposite skew tenon faces at one end of a piece of timber, at a cutting station, with one end of said piece of timber defining laterally opposite faces accessible for cutting therein, said tenon cutting machine comprising a straight arm extending lengthwise transversely of said piece of timber adjacent said one end, said arm being pivotable transversely across said one end of the piece of timber between first and second inclined positions with respect to said laterally opposite faces, first actuation means for moving said arm back and forth from one to the other of said inclined positions, a carriage reciprocatively movable along said one arm, second actuation means connected to said one arm and to said carriage to operatively move the latter back and forth along said arm, a cutting head mounted on said carriage and bodily displaceable therewith transversely of said

piece of timber upon reciprocating movement of said arm, said cutting head including a body rotating about an axis extending longitudinally of said piece of timber, at least one cutter radially projecting from said body and having a cutting edge extending longitudinally of the piece of timber, but inclined thereto, to cut a skew tenon face at one of said laterally opposite faces of said piece of timber, said cutting head body further having at one end face thereof at least one routing cutter having a cutting line extending transversely to the cutting axis of the cutting head and for cutting into said piece of timber a transverse face intersecting said skew tenon face, a motor mounted on said carriage and actuating said cutting head, whereby with said arm in one of said inclined positions, the rotating cutter head will cut one skew tenon face at one of said laterally opposite faces of said piece of timber during reciprocation movement of said cutter head and the rotating cutter will cut a second skew tenon face at the other of said laterally opposite faces of said piece of timber upon reciprocating movement of said carriage with said arm positioned in its other inclined position with respect to said piece of timber.

4,064,921

COILED SPRING LOCK WASHER FOR SOCKET BOLTS

Shigeru Kose, No. 8, 25-Ban, 1-chome, Furuedai, Suita, Osaka, Japan

Filed Sept. 5, 1974, Ser. No. 503,520

Claims priority, application Japan, Sept. 8, 1973, 48-105440[U]

Int. Cl.² F16B *39/24*

U.S. Cl. 151—38 **1 Claim**

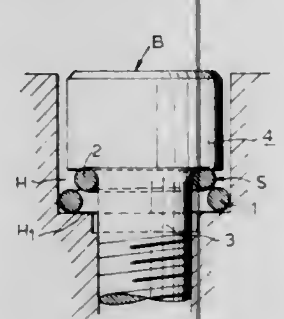

1. A coiled spring lock washer for a socket bolt having a head portion and fitted into a member having a socket for receiving said bolt, said lock washer comprised of an elastic wire rod positioned beneath the head of the bolt in said socket and wound conically into a coil having more than one ring and less than two rings, said coil having a lower ring portion and an upper ring portion conically above the lower ring portion beneath the head of the socket bolt, the upper ring portion having an outside diameter slightly larger than the inside diameter of the lower ring portion, and the lower ring portion having an outside diameter slightly smaller than the inside diameter of the socket in which it is positioned, whereby tightening the bolt causes the upper ring portion of the rod above the lower ring portion contacting the underneath side of the head of the bolt to move downward against the inside diameter of the lower ring portion, forcing the lower ring portion to move downward into the socket and to expand the wedge against the side wall of the bottom of the socket, thus forcing the upper ring portion of the rod to wind around the bolt shaft as it is tightened, hereby locking the bolt into position in the socket.

4,064,922

PUNCTURE SEALING COMPOSITION AND TIRE

Milton Farber, Bethany; Frederick C. Loveless, Cheshire, and Robert F. Peterson, Jr., Woodbury, all of Conn., assignors to Uniroyal, Inc., New York, N.Y.

Continuation-in-part of Ser. No. 557,713, March 12, 1975, Pat. No. 3,981,342. This application May 6, 1976, Ser. No. 683,861

The portion of the term of this patent subsequent to Sept. 21, 1993, has been disclaimed.

Int. Cl.² B60C *21/08*

U.S. Cl. 152—347 **33 Claims**

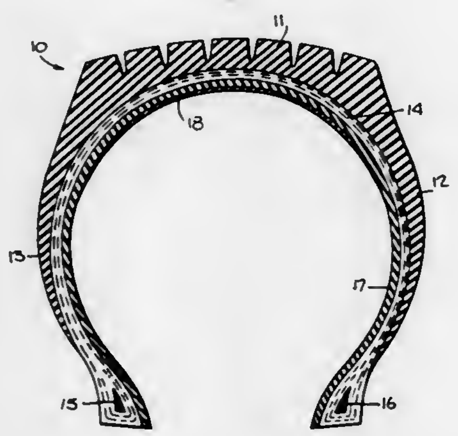

1. A puncture sealing composition for a tubeless pneumatic tire comprising a fiber-free blend of

A. a major proportion by weight of a low molecular weight liquid elastomer in admixture with a tackifying or plasticizing substance, and

B. a minor proportion by weight of a high molecular weight solid elastomer,

and a crosslinking agent for the elastomers in amount effective to partially crosslink the elastomers to an extent sufficient to prevent the blend from flowing at elevated temperatures and centrifugal forces encountered in the tire in use, the blend having in the partially crosslinked state sufficient adhesion and conformability to function as a sealant in the tire, the amount of (A) being from more than 50% to 90% by weight and the amount of (B) being correspondingly from less than 50% to 10% by weight, based on the combined weights of (A) and (B), the said low molecular weight elastomer being a liquid rubber having a Brookfield viscosity at 150° F of from 20,000 to 2,000,000 cps and the said high molecular weight elastomer having a Mooney viscosity of from 20 to 160 ML-4 at 212° F, the said crosslinking agent being selected from the following, present in the amounts recited:

from more than 0.5 to 2.0 parts of sulfur or sulfur-yielding curative;

from more than 0.5 to 2.0 parts of quinoid curative;

from 0.1 to 1.0 part of radical generating curative;

from 2 to 10 parts of polyisocyanate curative; and

from 2 to 10 parts of tetrahydrocarbyl titanate ester curative,

the said parts of crosslinking agent being by weight based on 100 parts of the combined weight of the two elastomers, the gel content of the blend in the partially crosslinked state being from 15 to 60% by weight of the blend, as measured in toluene at room temperature, and the peak Mooney viscosity of the blend in the partially crosslinked state being from 30 to 55 ML at 150° F.

4,064,923

TIRE VALVE ASSEMBLY

Dale F. German, Roxboro, and Charles Nidle, Durham, both of N.C., assignors to Eaton Corporation, Cleveland, Ohio

Filed Apr. 13, 1976, Ser. No. 676,437

Int. Cl.² B60C *29/00*

U.S. Cl. 152—427 **2 Claims**

1. A housing assembly for snap-in installation in an aperture provided in a wheel rim, said assembly comprising:

A. a tubular grommet formed of elastomeric material having

first portions thereof defining a circumferential shoulder about the outer periphery thereof and second portions formed on the outer periphery thereof defining a surface adapted to be received in closely fitting relationship with the inner periphery of said rim aperture, said shoulder being adapted for contacting the inner surface of said rim adjacent said aperture;

B. an elongated generally cylindrical stem member having a first circumferential flange portion provided on the outer periphery thereof, said first flange being sized to prevent passage through said rim aperture, said stem having a second flange portion provided thereon and longitudinally spaced from said first flange portion by an amount less than the free length of said grommet with said second flange portion being sized to pass through said rim aperture, said stem having the outer periphery thereof defining a third portion in the region intermediate said first and second flange portions said third portion being sized to provide an interference fit when received in the inner periphery of said grommet; and

C. said stem having a pilot portion adjacent said second flange portion, said pilot portion having the inner periphery of said grommet received thereover in a slip fitting arrangement such that, upon initial insertion of said grommet, with said stem pilot portion received therein into said rim aperture from the interior side thereof and registry of said second portion of said grommet against the inner surface of said rim adjacent said aperture with portions of said grommet extending through said aperture, further movement of said grommet in said aperture is prevented and upon further insertion of said stem through said aperture and passage of said second flange portion of said stem through the inner periphery of said grommet disposing said first flange portion on the opposite side of said rim aperture from said first stem flange portion and upon application of a longitudinal force to said stem causing compression of portions of said grommet intermediate said first stem flange and said rim, said second stem flange passes through said grommet and extends free thereof and upon release of said longitudinal force on said stem, said grommet is longitudinally compressed between said first and second stem flanges and the said portions of said grommet extending through said aperture are compressed longitudinally to provide a fluid pressure seal around said rim aperture between said grommet shoulder on one side of said rim aperture and said grommet portions extending through said aperture on the other side of the said rim aperture.

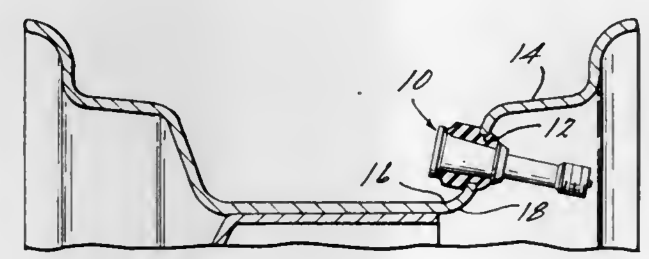

4,064,924

TRAFFIC DOOR

John C. Catlett, Milwaukee, Wis., assignor to Kelley Company, Inc., Milwaukee, Wis.

Filed Dec. 24, 1975, Ser. No. 644,053

Int. Cl.² A47H *23/00*

U.S. Cl. 160—354 **7 Claims**

1. A traffic door to be mounted in a doorway and comprising a frame, means for mounting the door for swinging movement between an open and a closed position, a panel carried by the frame, an edge seal strip connected to a vertical edge of the panel, said strip being generally U-shaped in cross section and including a central generally flexible section and a pair of substantially rigid arms extending outwardly from the central section and disposed in engagement with opposite sides of the panel, said arms having serrations on the surfaces thereof facing the panel, and locking means connected to said arms and located between the flexible section and the panel, said locking means including cooperating male and female locking elements with said elements having cooperating ratchet type teeth.

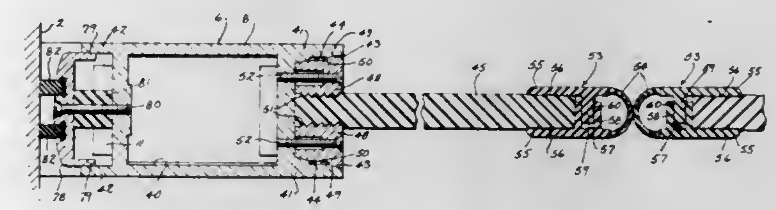

4,064,925

CONTINUOUS CASTING METHOD AND APPARATUS

Thorwald Fastner; Alois Niedermayr, both of Linz; Johann Nakesch, Pasching, and Max Turmer, Linz, all of Austria, assignors to Vereinigte Osterreichische Eisen- und Stahlwerke-Alpine Montan Aktiengesellschaft, Linz, Austria

Filed Feb. 20, 1976, Ser. No. 659,920

Claims priority, application Austria, Feb. 25, 1975, 1402/75

Int. Cl.² B22D *11/10*

U.S. Cl. 164—66 **6 Claims**

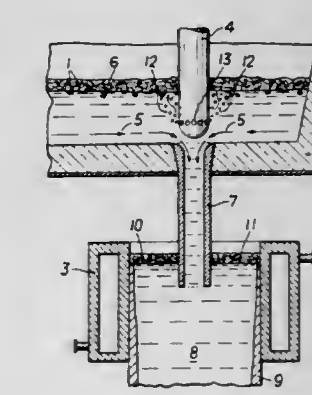

1. A continuous casting method of treating metal salts with flush gas, which comprises the steps of:

supplying molten metal contained in a tundish and covered by a layer of slag particles into a continuous casting mould through an outflow opening in said tundish,

introducing an inert flush gas at a distance above the outflow opening in said tundish during casting, said distance being equal to at least half the diameter of the outflow opening, and

adjusting the amount of inert flush gas introduced to from at least 30 Nl to at most 300 Nl per minute, to form upwardly rising gas bubbles in said tundish, thereby preventing slag particles from being supplied to the mould together with the molten metal.

4,064,926

SAND MOLDING APPARATUS WITH MEANS FOR RECIRCULATING CATALYST

Robert Naegele, Erding, Germany, assignor to Acme-Cleveland Corporation, Cleveland, Ohio

Filed May 17, 1976, Ser. No. 686,838

Claims priority, application Germany, June 16, 1975, 2526875

Int. Cl.² B22C *9/12*

U.S. Cl. 164—154 **51 Claims**

1. An apparatus for hardening a molding article in a molding box which is connected through a feed line provided with a shut-off valve to a catalyst gas source, through a vent line provided with a shut-off valve to the atmosphere and through a suction line to a vacuum pump which evacuates the molding box and sucks the catalyst gas through the molding article for the purposes of hardening, wherein the improvement com-

prises a reversible valve assembly having an inlet and first and second outlets, means connecting said inlet to the pressure side of the vacuum pump, means connecting said first outlet to a return line leading to the catalyst gas source and said second

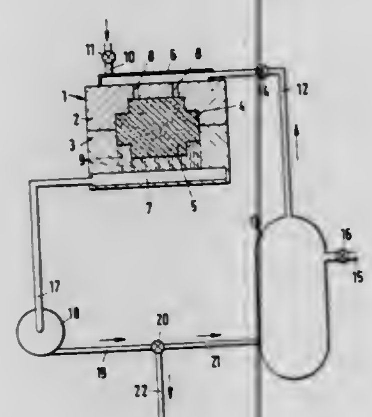

outlet to atmosphere, whereby the reversible valve assembly, in one position, connects the pressure side of the vacuum pump to said return line leading to the catalyst gas source and, in the other position, connects the pressure side of the vacuum pump to the atmosphere.

4,064,927
STANDARDIZED INVESTMENT MOLD ASSEMBLY
Richard C. Ostrowski, Dunlap, Ill., assignor to Caterpillar Tractor Co., Peoria, Ill.
Filed Nov. 11, 1976, Ser. No. 740,995
Int. Cl.^{2} B22C *7/02*
U.S. Cl. 164—244 **18 Claims**

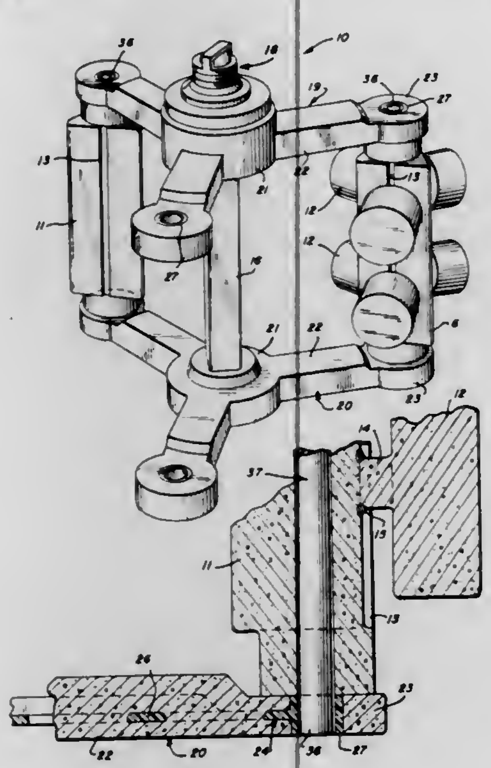

12. A rigidified investment casting wax mold comprising: a first wax sprue forming means; thermally decomposable reinforcing means embedded within said sprue forming means, the strength of the material forming said reinforcing means being substantially greater than that of the sprue forming wax at ambient temperatures thereby causing the reinforced sprue forming means to be rigid; a second wax sprue forming means; second thermally decomposable reinforcing means embedded within said second sprue forming means, said first and second reinforcing means defining interfitted connecting portions for causing the first and second sprue forming means to define a continuous sprue former; and a plurality of wax patterns secured directly to said first wax sprue forming means in substantially spaced relationship to said reinforcing means thereof.

4,064,928
DIE CASTING MACHINE
William G. Wunder, Hamilton, Mich., assignor to Ex-Cell-O Corporation, Troy, Mich.
Filed Nov. 30, 1976, Ser. No. 745,991
Int. Cl.^{2} B22D *17/10, 17/24, 19/00*
U.S. Cl. 164—264 **25 Claims**

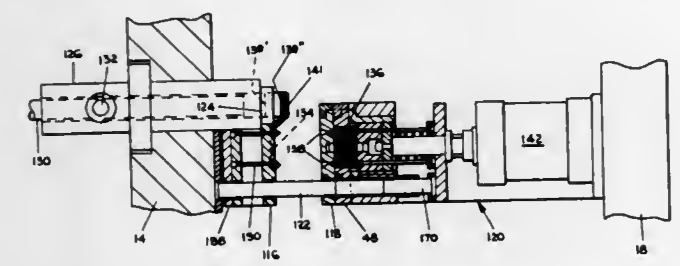

1. Die casting apparatus for casting a part comprising:
a pair of opposed pressure plates, one plate being a fixed plate and the other plate being a traveling plate, the traveling plate being relatively movable in an axial direction toward and away from the fixed plate to close and open the die casting apparatus;
indexing means mounted between the plates for moving the part through a plurality of separate stations, one station being a casting station;
carrier plate means mounted on the indexing means for conveying the part to each station, the carrier plate means being axially movable independent of the fixed and traveling plates, the carrier plate means having a part cavity therein with open ends facing the fixed and traveling plates;
cover die means mounted on the fixed plate at the casting station for axial movement with respect to the fixed plate, the cover die means having an inner side facing the traveling plate and an outer side facing the fixed plate, the cover die means covering one end of the part cavity when the die casting apparatus is closed, the cover die means having gate means therein for conveying molten casting material through the outer side of the cover die means into the interior of the carrier plate part cavity, the gate means being formed such that after a part has been cast, solidified material forming a runner system leading to the cast part can be broken from the cast part by axially moving the cast part away from the runner system;
a runner plate mounted on the fixed plate between the fixed plate and the outer side of the cover die means, the runner plate including runner cavity means in the surface thereof for conveying molten material under pressure along the outer side of the cover die means to the gate means for injection into the part cavity when the die casting apparatus is closed;
ejector die means for covering the other open end of the part cavity in the carrier plate when the carrier plate is in the casting station, said ejector die means being mounted on the traveling plate;
means for moving the traveling plate between open and closed positions so as to open and close the die casting apparatus, the runner plate, cover die, carrier plate, and ejector die all being pressed together when the die casting apparatus is closed, such that molten material injected into the runner conduits under pressure is conveyed into the interior of the part cavity, the traveling plate being moved outwardly a third predetermined distance in moving from its closed to its open position;
means for injecting molten material into the part cavity through the runner cavities and gate means when the die casting apparatus is closed;
cover die operating cylinder means for moving the cover die means outwardly from the runner plate after the completion of a casting operation so as to expose the runner system and break the runner system from the cast part at the gate means, the cover die means and runner plate being formed such that the runner system remains attached to the runner plate when the cover die means is moved away from the runner plate, the cover die operating cylinder means keeping the cover die means pressed against the carrier plate means as the traveling plate moves away from the fixed plate, the cover die operating cylinder means stopping the outward movement of the cover die means after it is moved outwardly a first predetermined distance, said first predetermined distance being shorter than said third predetermined distance, movement of the traveling plate beyond said first predetermined distance serving to remove the cover die from the cast part and carrier plate;
ejector die ejector means for stopping outward movement of the carrier plate means after the carrier plate means has moved outwardly a second predetermined distance, the second predetermined distance being greater than the first predetermined distance but less than the third predetermined distance, movement of the traveling plate past said second predetermined distance serving to separate the ejector die means from the cast part and carrier plate means, leaving the carrier plate means free for movement to a subsequent station; and
runner ejector means for dislodging the runner system from the runner plate after the cover die means has moved away from the cover plate.

4,064,929
APPARATUS FOR VARYING THE MOLD LENGTH OF ENDLESS BELT MOLDS USING INTERCHANGEABLE BELTS
Andre Quehen, Pontoise, and Roger Figueres, Grenoble, both of France, assignors to Secim, Courbevoie and Societe de Vente de l'Aluminium Pechiney, Paris, both of, France
Continuation-in-part of Ser. No. 480,560, June 18, 1974, abandoned. This application Mar. 19, 1976, Ser. No. 668,797
Claims priority, application France, June 26, 1973, 73.23326
Int. Cl.^{2} B22D *11/06*
U.S. Cl. 164—433 **3 Claims**

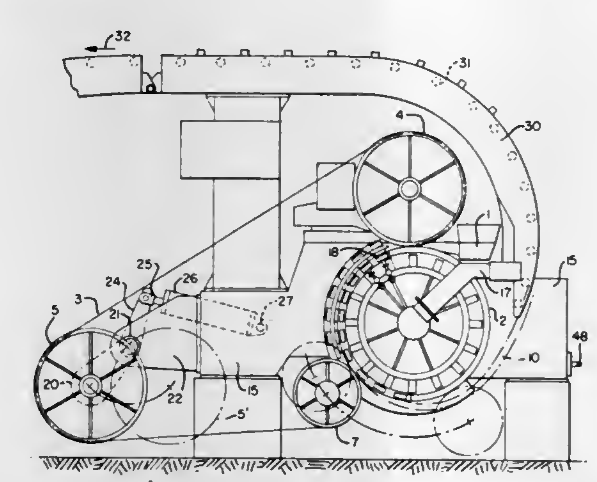

1. Improved machine for the continuous casting of a metallic ribbon comprising a grooved wheel, a base, bearings on said base supporting said grooved wheel, means for rotating said grooved wheel, a motor wheel, a first endless metallic ribbon on said motor wheel and partially surrounding said grooved wheel to form a mold, said motor wheel being substantially tangent to said grooved wheel, bearings mounted on said base for mounting said motor wheel relative to said grooved wheel, means operatively assocated with said motor wheel for rotating said motor wheel at the same peripheral speed as said grooved wheel, a first guide wheel operatively assoicated with said endless metallic ribbon for tensioning said ribbon, movable bearings for moving said first guide wheel mounted on said base, means operatively associated with said movable bearings for moving said movable bearings in a direction tending to apply said ribbon against the periphery of said grooved wheel at a specific tension, a second guide wheel operatively associated with said ribbon, bearings mounting said second guide wheel, arm means supporting said bearings mounting said second guide wheel and pivoting around the axis of rotation of said grooved wheel, the distance between the centers of said two guide wheels being practically equal to the sum of their radii such that said second guide wheel remains substantially tangent to said grooved wheel, means for pivoting said arms articulated around the axis of said grooved wheel and for fixing them in a given position between two extreme positions, said extreme positions forming between them an angle of at least 90°, a plurality of endless metallic ribbons of different lengths from said first endless metallic ribbon and interchangable therewith each corresponding to a different predetermined angular position of said pivoting arms to form molds of different lengths, means operatively associated with the grooved wheel and endless metallic ribbon for pouring liquid metal at the entry of the part of the groove closed by said ribbon in the zone where said motor wheel of the ribbon is substantially in contact with said grooved wheel, means operatively associated with said grooved wheel for cooling the periphery of said grooved wheel, and means operatively associated with said grooved wheel and second guide wheel for guiding the solidified metal blank from the zone where it leaves the groove and where said second guide wheel is substantially in contact with said grooved wheel.

4,064,930
CONTINUOUS CASTING METHOD USING A LADLE BOGIE
Shoji Nakamura, Hirakata, Japan, assignor to Kyoei Steel Ltd., Osaka, Japan
Filed Feb. 3, 1977, Ser. No. 765,405
Claims priority, application Japan, July 8, 1976, 51-81791
Int. Cl.^{2} B22D *11/10*
U.S. Cl. 164—82 **1 Claim**

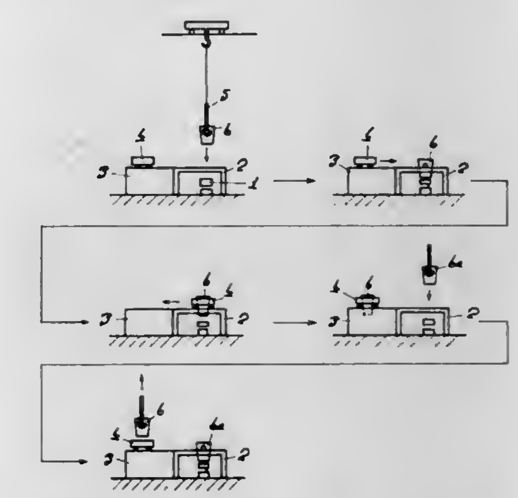

1. A method of continuous casting using a crane and a ladle bogie which is adapted to travel between a ladle shunting position and a position right above a tundish, comprising the steps of:
a. disposing the bogie on a stand in the shunting position;
b. placing a ladle filled with molten steel on a stand right above a tundish by the use of a crane and then teeming steel;
c. causing the bogie to retreat to the shunting position and thereafter supplying a new ladle filled with molten steel onto the stand right above the tundish, thus exchanging ladles quickly for continuous teeming.

4,064,931
FUSION-TYPE THERMAL STORAGE ACCUMULATOR WITH DISCHARGING APPARATUS
Nikolaus Laing, Hofener Weg 35-37, 7141 Aldingen, Germany
Filed Sept. 24, 1975, Ser. No. 616,241
Claims priority, application Austria, Sept. 30, 1974, 7857/74
Int. Cl.^{2} F28D *21/00*
U.S. Cl. 165—1 **7 Claims**

1. Apparatus for thermally discharging a heat storage accu-

mulator containing a fusible storage substance the density of which in the solid state is larger than in the liquid state, characterized in that the accumulator has a heat transfer component located at the center of the accumulator, a heat exchange component located at the bottom of the accumulator and

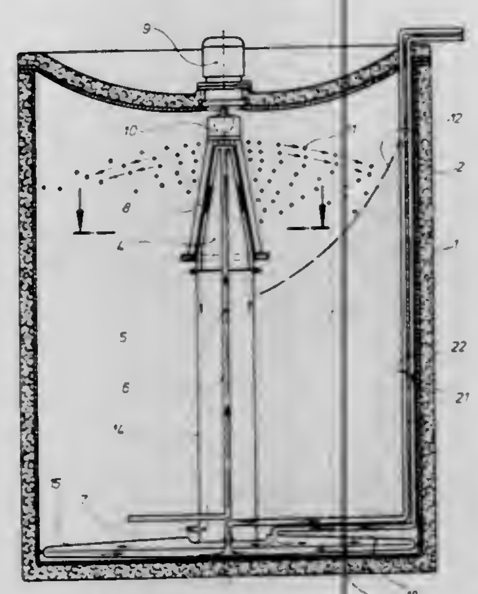

through which a fluid heat carrier is conducted and where the heat exchange component is subdivided by an intermediate wall into two chambers which intercommunicate along the periphery of the component, and means for producing an angular motion of the storage substance in its liquid state around said heat transfer component.

4,064,932

ALL CLIMATE HEAT EXCHANGER UNIT WITH ADJUSTABLE TEMPERATURE AND DEFROST CONTROL

Wilfrido R. Iriarte, Long Beach, Calif., assignor to Hughes Aircraft Company, Culver City, Calif.

Filed Feb. 14, 1977, Ser. No. 768,457

Int. Cl.² F28D *15/00*

U.S. Cl. 165—1 **13 Claims**

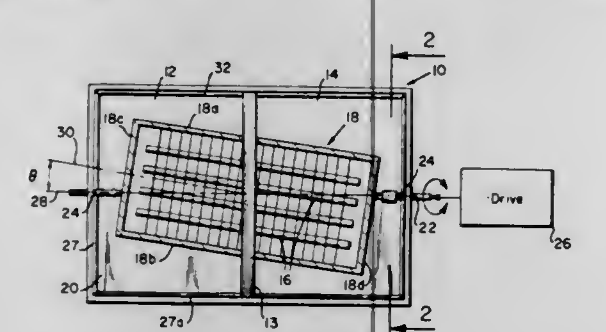

12. A heat exchanger including heat pipes in and thermally coupling at least two paths of fluid flows, in which said heat pipes are angularly movable about an axis, characterized in that said heat pipes have a fixed angular offset from the axis and an angular inclination with respect to gravity for unidirectional transfer of thermal energy between said fluid flow paths.

4,064,933

DEVELOPING ROLLER APPARATUS FOR REPRODUCTION MACHINES

Gordon A. Schuman, Rolling Meadows, Ill., assignor to Dietzgen Corporation, Des Plaines, Ill.

Filed Sept. 29, 1975, Ser. No. 617,784

Int. Cl.² F28D *11/02*

U.S. Cl. 165—89 **2 Claims**

1. A developing roller for use in the development of heat-sensitive copy sheets in a reproduction machine, said roller comprising:

a hollow, thin-walled heat conducting cylinder rotatably mounted in the reproduction machine;

a plurality of relatively small diameter heat pipes mounted along the inner wall of said cylinder between its ends; and

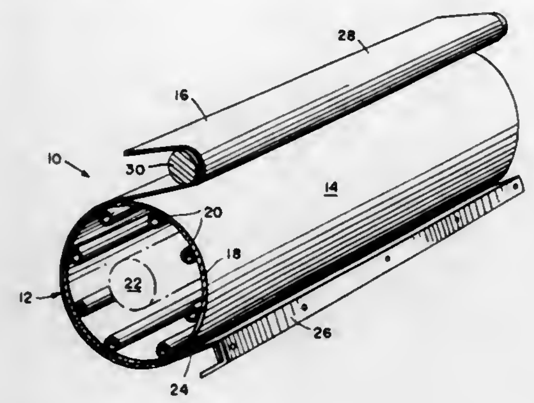

a means for heating said cylinder and heat pipes located within the hollow interior of said cylinder.

4,064,934

RADIATOR AIR FLOW CONTROL MECHANISM

Clyde Paul Kolthoff, Jr., Naperville, and Otto J. Brennolt, Woodridge, both of Ill., assignors to International Harvester Company, Chicago, Ill.

Filed Nov. 7, 1975, Ser. No. 629,932

Int. Cl.² F28F *13/02, 13/12, 27/02;* **F01P** *7/00*

U.S. Cl. 165—97 **6 Claims**

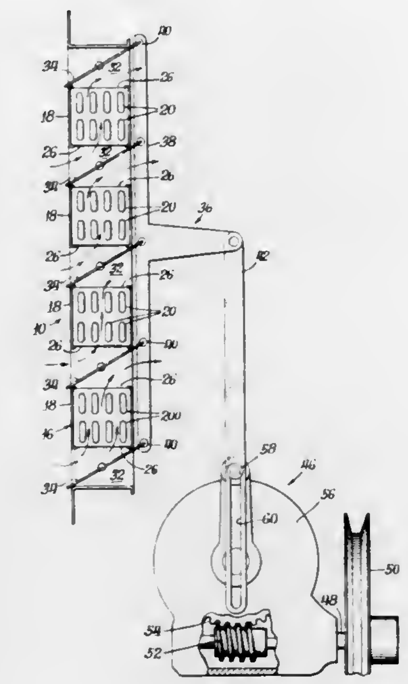

1. An improvement in a radiator system of the type having a radiator core comprising a plurality of parallel spaced core sections arranged in a row with the opposing faces of adjacent core sections being open to define an air flow passageway through each core section at a constant transverse angle to the direction that the cooling air is delivered towards said row of core sections, said improvement comprising gate means having a first position for directing the cooling air through each of said air flow pageways of said core sections in one direction and having a second position for directing the cooling air through each of said air flow passageways in the opposite direction to said one direction, and drive means for continuously reciprocating said gate means between said first and second positions.

4,064,935

OIL WELL STIMULATION APPARATUS

Henry H. Mohaupt, Santa Barbara, Calif., assignor to Kine-Tech Corporation, Sacramento, Calif.

Filed Sept. 13, 1976, Ser. No. 722,796

Int. Cl.² E21B *43/26*

U.S. Cl. 166—63 **6 Claims**

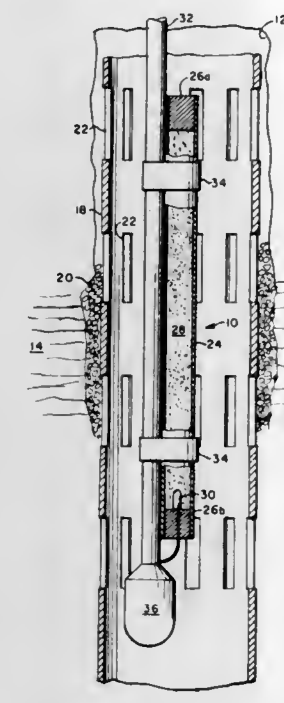

1. An apparatus for stimulating the flow of oil and well fluids in an oil well comprising

means defining an elongated fluid proof frangible housing adapted to be received in an oil well bore,

an elongated, generally evenly distributed burnable chemical gas generating charge having a generally uniform cross section along the length of said charge, and having a linear flame propagation velocity less than the velocity of sound in the well fluid located within said fluid proof frangible housing, and

means for igniting said elongated burnable gas generating chemical charge beginning at one location of said elongated charge.

4,064,936

CHEMICAL TREATING SYSTEM FOR OIL WELLS

L. C. McClure, P.O. Box 505, Midland, Tex. 79701

Filed July 9, 1976, Ser. No. 704,076

Int. Cl.² E21B *3/03*

U.S. Cl. 166—75 R **9 Claims**

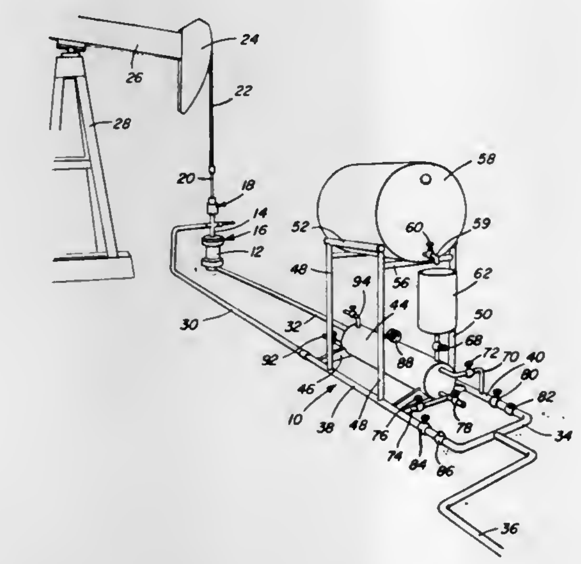

1. An oil well treating system in which the oil well includes a casing in the bore hole and a production tubing string in the casing, said system comprising a pipe communicated with the upper end of the production tubing string and a pipe communicated with the upper end of the casing, said pipes extending away from the oil well and disposed in spaced relation, a stand rigidly interconnecting said pipes and extending above the pipes, a supply tank for chemical additive supported by said stand, a measuring container supported by said stand below the supply tank for receiving a predetermined quantity of chemical additive therefrom, a mixing vessel supported from said stand below the mixing container and communicated therewith, said mixing vessel being disposed above said pipes, a bypass line extending from each of said pipes to said mixing vessel with valves in each of the bypass lines to enable circulation of fluid through the mixing vessel and pipes for flushing chemical additive in the mixing vessel into the oil well for treating down hole equipment in the well.

4,064,937

ANNULUS PRESSURE OPERATED CLOSURE VALVE WITH REVERSE CIRCULATION VALVE

Burchus Q. Barrington, Duncan, Okla., assignor to Halliburton Company, Duncan, Okla.

Filed Feb. 16, 1977, Ser. No. 769,129

Int. Cl.² E21B *43/12, 47/00*

U.S. Cl. 166—162 **7 Claims**

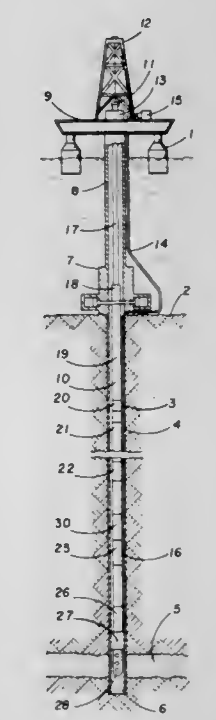

1. An apparatus for use in testing an oil well having a testing string in a borehole extending from the surface of the earth to a formation to be tested, comprising:

a cylindrical housing adapted to be incorporated in said testing string, having an open bore therethrough, and a power port and a circulating port through the walls thereof;

a power mandrel in said open bore having an annular piston for moving said power mandrel in a first direction responsive to fluid pressure exterior of said cylindrical housing communicated to said annular piston through said power port;

frangible restraining means between said power mandrel and said cylindrical housing for restraining movement of said power mandrel in the first direction until the pressure exterior of said housing exceeds a predetermined value, and for frangibly releasing said power mandrel when said pressure exterior of said housing exceeds said predetermined value;

full opening closure valve means in said cylindrical housing having a normally open position and a closed position for providing a fully open flow passageway through the open bore in said housing when in the normally open position;

connecting means connecting said full opening closure valve means to said power mandrel including means for moving said closure valve from the fully open position to a fully

closed position responsive to movement of said power mandrel in the first direction;

first releasing means in said connecting means for selectively releasing said connecting means from said power mandrel after said power mandrel has moved a predetermined distance in the first direction; and

circulation valve means in said housing including a sliding valve mandrel having a normally closed position closing said circulating port and an open position opening said circulating port, said circulation valve means including means for moving said sliding valve mandrel from the closed position to the open position responsive to a predetermined amount of movement of said power mandrel in the first direction.

4,064,938

WELL SCREEN WITH EROSION PROTECTION WALLS

Clarence R. Fast, Tulsa, Okla., assignor to Standard Oil Company (Indiana), Chicago, Ill.

Filed Jan. 12, 1976, Ser. No. 648,357

Int. Cl.² E21B *43/08*

U.S. Cl. 166—236 **2 Claims**

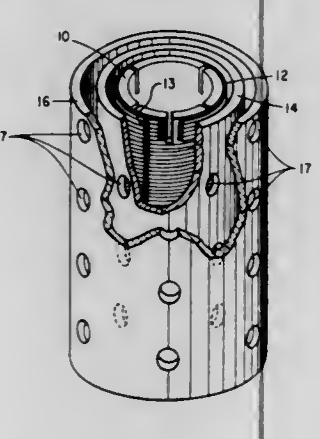

1. A sand screening assembly resistant to erosion when used in oil and gas wells in which sand tends to be entrained in the stream of fluid entering the wellbore, said assembly comprising:

a. an inner section of perforated pipe;

b. at least one layer of wire screen positioned around said pipe; and

c. a stream-deflecting means having an erosion-resistant wall at least one-fourth inch thick positioned around said layer of wire screen for deflecting said stream of fluid to prevent direct impingement of said stream on said layer of wire screen, wherein said stream-deflecting means comprises an outer portion of resilient, petroleum-resistant, elastromeric material, and an inner portion of rigid metal.

4,064,939

METHOD AND APPARATUS FOR RUNNING AND RETRIEVING LOGGING INSTRUMENTS IN HIGHLY DEVIATED WELL BORES

Gerald L. Marquis, London, England, assignor to Dresser Industries, Inc., Dallas, Tex.

Filed Nov. 1, 1976, Ser. No. 737,922

Int. Cl.² E21B *47/00*

U.S. Cl. 166—253 **4 Claims**

1. A method for logging the formations surrounding an earth borehole, comprising:

running a string of drill pipe within an earth borehole;

running a string of tubing inside the said string of drill pipe, said string of tubing having a well logging instrument attached to the lower end of said tubing;

lowering a weighted probe attached to a well logging cable through said tubing until said probe makes electrical contact with said well logging instrument;

clamping said cable to an upper head member attached to the uppermost end of said string of tubing;

lowering said tubing and said well logging instrument out the lower end of said drill pipe; and

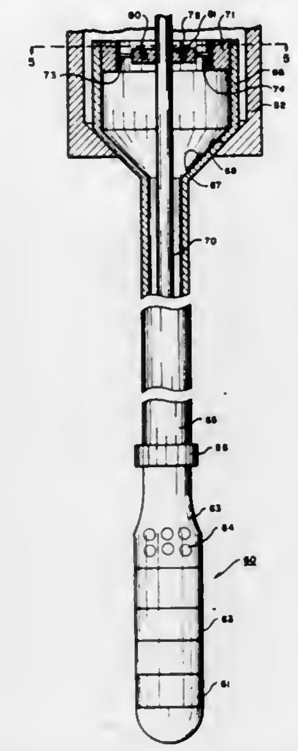

causing said well logging instrument and said tubing to traverse said borehole and to log at least a portion of the formations surrounding the borehole.

4,064,940

WATER CONTROL WITH POLYMERS

Derry D. Sparlin, Ponca City, Okla., assignor to Continental Oil Company, Ponca City, Okla.

Filed Nov. 8, 1976, Ser. No. 739,418

Int. Cl.² F02D *3/14*

U.S. Cl. 166—295 **6 Claims**

1. An improved method of treating a subterranean formation for reducing the flow of aqueous liquids therethrough by injecting a solution of polymer into said formation through a well bore, the improvement comprising injecting a dispersion of

a. a thermoplastic or thermosetting cross-linked or non-cross-linked water-insoluble polyamide having recurring amide groups as an integral part of the main polymer chain, together with

b. an aqueous solution of a water-soluble polymer, wherein

c. the water-insoluble polyamide is dispersed in water in a concentration of from about 10 parts per million (ppm) to 30% by weight and the water soluble polymer in the aqueous solution is in a concentration of from about 100 ppm to about 5,000 ppm based on the total solution.

4,064,941

APPARATUS AND METHOD FOR MIXING SEPARATED FLUIDS DOWNHOLE

Donald M. Smith, 13282 La Vaughn Drive, Garden Grove, Calif. 92664

Filed Aug. 2, 1976, Ser. No. 710,886

Int. Cl.² E21B *43/27, 43/00*

U.S. Cl. 166—300 **29 Claims**

1. Apparatus for admixing within a predetermined time span, two separated fluids downhole in tubular apparatus in a cased well through which tubing extends within said casing from said tubular apparatus to the surface, comprising:

means within said tubular apparatus defining a first fluid compartment,

means within said tubular apparatus defining a second fluid compartment,

means within said tubular apparatus for separating fluids contained in said first and second compartments,

means including a displacement fluid actuatable from the

surface through said tubing for displacing said separating means downhole to permit downhole admixture of the fluids in said first and second compartments, said tubular apparatus including a ported tubular member which is affixed to the lower end of said tubing and in fluid communication with said tubing, and a ported sliding sleeve

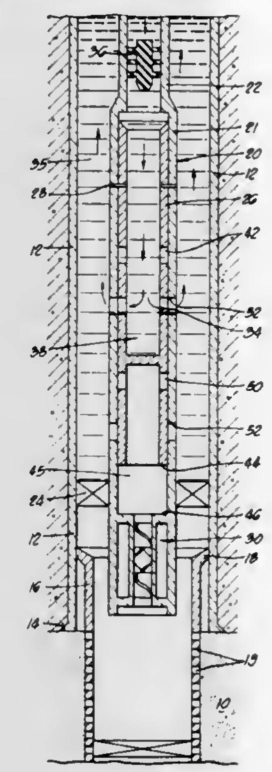

movably disposed within said tubing member for displacing said separating means to admix said first and second fluids in said tubular apparatus, and

an in-line mixer adjacent the lower end of said tubular apparatus for intimately mixing said admixture preparation to injection of said mixture into a well zone.

4,064,942

AQUIFER-PLUGGING STEAM SOAK FOR LAYERED RESERVOIR

Michael Prats, Houston, Tex., assignor to Shell Canada Limited, Toronto, Canada and Shell Explorer Limited, Houston, Tex.

Filed July 21, 1976, Ser. No. 707,170

Int. Cl.² E21B *43/24*

U.S. Cl. 166—303 **7 Claims**

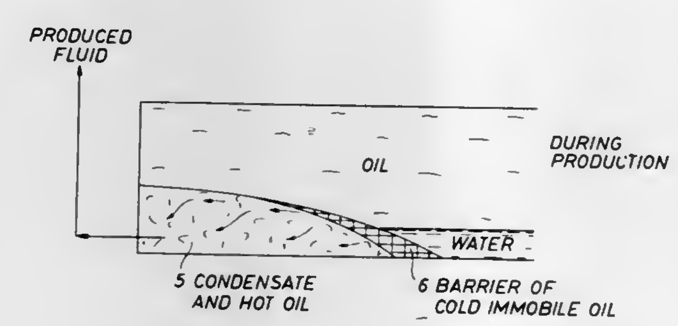

1. A steam soak process for producing oil from a subterranean reservoir in which a relatively viscous oil is contained in a relatively steam impermeable layer overlying a more permeable layer of higher water content, into which reservoir a well is opened into fluid communication with at least a portion of the water layer within which the steam permeability tends to be greater than that in the oil layer because of the absence of the relatively immobile oil, comprising:

injecting steam through the well and into the resevoir at a relatively high rate and volume sufficent to heat the normally relatively immobile reservoir oil, displace a bank of heated oil radially outward and downward into a portion of the water layer, and cause the steam injectivity to become significantly decreased; and

subsequently producing oil by reducing the pressure in the well borehole and withdrawing fluid from the zone immediately around the well and closer to the well than the so-displaced oil bank, which zone contains relatively highly pressurized hot water and oil.

4,064,943

Plugging Permeable Earth Formation With Wax

Daniel C. Cavin, Houston, Tex., assignor to Shell Oil Company, Houston, Tex.

Filed Dec. 6, 1976, Ser. No. 748,034

Int. Cl.² E21B *43/27, 33/138*

U.S. Cl. 166/281 **8 Claims**

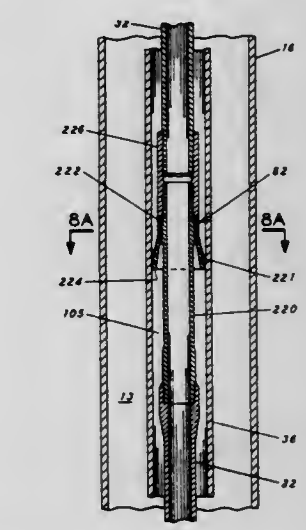

1. A process for reducing the permeability of a subterranean earth formation which is exposed to the fluid in the borehole of a well, comprising:

mixing molten wax substantially homogeneously with an emulsifying agent consisting essentially of at least one salt of a surface active amine or quaternary ammonium compound;

dispersing the molten wax mixture within an aqueous liquid to form an oil-in-water emulsion of relatively high shear stability by imparting sufficient agitating force to form a dispersion in which substantially all of the dispersed particles have mean diameters of less than about 4 microns and adjusting the pH of the aqueous phase to less than about 4;

dissolving a pH-increasing reactant within the aqueous phase of the emulsion, at least substantially as soon as the emulsion flows into the earth formation to be treated, with the kind and amount of said reactant being such that its reaction causes the emulsion to break relatively soon after the emulsion and the reactant have been subjected to the time-temperature exposure involved in flowing a fluid into the earth formation; and

flowing the reactant-containing emulsion into the earth formation at a rate such that wax is deposited within and near the exposed face of the earth formation.

4,064,944

APPARATUS FOR FIRE EXTINGUISHING SYSTEM FOR FLOATING-ROOF TANKS

William F. McClure, SRA Box 1707, Anchorage, Alaska 99507, and David L. Brown, P.O. Box 581, Boyertown, Pa. 19512

Filed Apr. 9, 1976, Ser. No. 675,294

Int. Cl.² A62C *35/54, 37/02, 35/18*

U.S. Cl. 169—60 **2 Claims**

1. A fire extinguishing system comprising:

a source of pressurized expellant fluid;

an agent container containing liquid fire extinguishing agent;

said agent container including an expellant inlet and an agent outlet;

expellant conduit means for conducting expellant fluid from said expellant source to said expellant inlet of said liquid agent container;

control valve means in said expellant conduit means for blocking communication between said expellant source and said liquid agent container until a fire is sensed;

a sprayer duct connected to said agent outlet of said liquid agent container and extending into an area being protected;

an accumulator communicating continuously with said expellant source by being connected with said expellant supply conduit at a point upstream of said control valve means to be pressurized by pressure from said expellant source;

a flow control member in said expellant conduit means

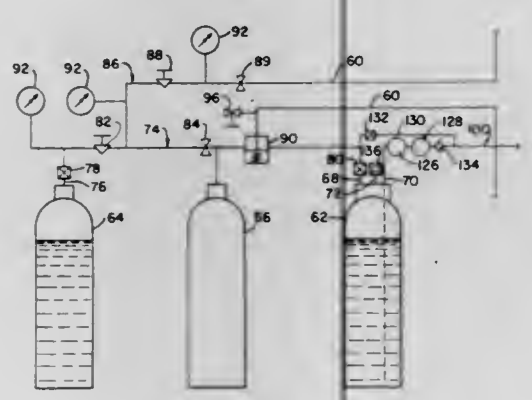

disposed upstream of said accumulator communication point for metering the flow of expellant fluid; and

fire sensing means for detecting a fire in said area being protected and for deactuating said control valve means to in response to fire detection to admit a surge of pressure from said accumulator to said agent container to rapidly displace agent into said sprayer duct, and thereafter admit metered pressure from said expellant source to discharge agent from said sprayer duct at a controlled rate.

4,064,945
ELECTRONIC DEPTH CONTROL SYSTEM
Robert M. Haney, Rockford, Ill., assignor to J. I. Case Company, Racine, Wis.
Filed Mar. 10, 1975, Ser. No. 556,531
Int. Cl.² A01B *63/114*
U.S. Cl. 172—4 **10 Claims**

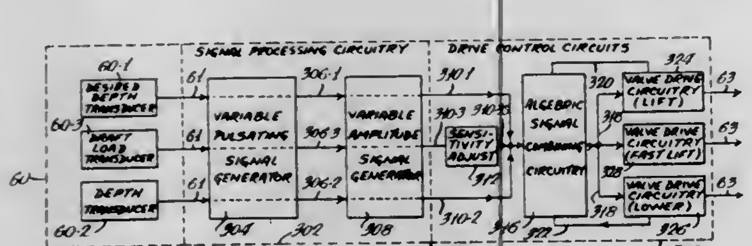

1. An electrical control system for controlling the depth of a vehicle drawn implement of the type having means connecting the implement to the vehicle, hydraulic motor means operable to raise and lower the implement to change the depth thereof, electrically operated valve means for effecting operation of said hydraulic motor means, and means for indicating the values of selected ones of a plurality of variables including a desired depth of the implement, the actual depth of the implement, and the draft load, said control system generating control signals for operating said valve means as a function of the relationship between values of the variables, said control system comprising:

transducer means responsive to said indicating means for sensing the value of each of the selected variables;

first circuit means responsive to each of said transducer means for generating pulsating signals each having a pulse repetition rate which varies as a function of and is representative of the value of one of the selected variables;

second circuit means responsive to each of said representative pulsating signals for generating electrical signals each having an amplitude indicative of the value of one of the selected variables and varying in accordance with the pulse repetition rate of one of said representative pulsating signals;

third circuit means for algebraically combining said variable amplitude signals for producing a combined signal having a polarity and amplitude determined by the algebraic sum of said variable amplitude signals;

fourth circuit means responsive to said combined signal for generating valve control signals in response to said combined signal exceeding a selected amplitude and for applying said control signal to said valve means to effect operation of said hydraulic motor means to selectively raise or lower said implement as a function of the polarity of said combined signal.

4,064,946
SPRING TRIP MECHANISM
Arnold E. Ernst, Wolverton, Minn. 56594
Filed Oct. 10, 1975, Ser. No. 621,470
Int. Cl.² A01B *61/04*
U.S. Cl. 172—710 **7 Claims**

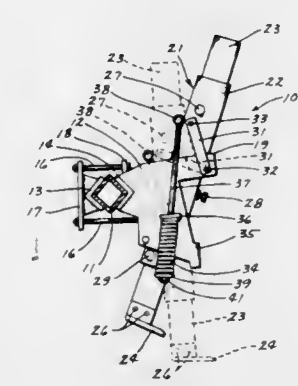

2. A device for connection to an earth working tool comprising:

a housing having a slot therein;

means for connecting said housing to a tool bar;

a tool holding rod extending through said slot, said rod having an earth working tool connected to the bottom end thereof;

at least one lever, said lever having a first pivotal connection on one end thereof pivotally connecting said lever to said housing, said lever having a second pivotal connection on the other end thereof pivotally connecting said lever to said rod; said lever acting as constraining means for said rod constraining said rod to a state of motion wherein as said rod pivots with respect to said housing, the axis around which said rod pivots moves upwardly with respect to said housing.

4,064,947
DRAW BAR FOR A MOTOR GRADER
Carroll Richard Cole, Decatur, Ill., assignor to Caterpillar Tractor Co., Peoria, Ill.
Filed Feb. 27, 1976, Ser. No. 661,880
Int. Cl.² E02F *3/76*
U.S. Cl. 172—781 **20 Claims**

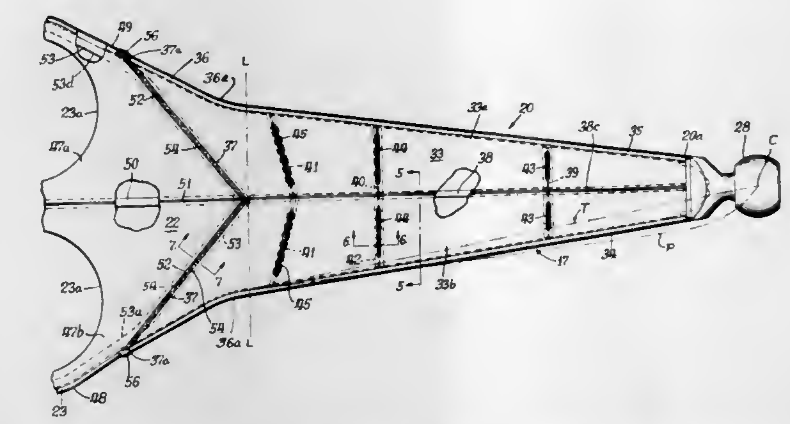

1. An improved motor grader circle mounting bar structure which has a connecting end provided with an integral ball which is adapted to be attached to a motor grader frame for universal movement about its own center, and which has a carrying portion adapted to be suspended from said frame by means which may pivot the mounting bar about said ball center, and said carrying portion being adapted to carry a circle structure for a grader blade, said improved mounting bar structure comprising, in combination:

a box-like beam the width of which increases from its connecting end toward said carrying portion, said beam having side plates, a top plate and a bottom plate both of which fill the entire space between the side plates from said connecting end to said carrying portion, and longitudinal and transverse internal vertical webs, the increase in width of said beam from its connecting end to the intersections of the side plates with a transverse plane which is near to but outside the circle being such that the side plates lie entirely between,

a. an isosceles triangle plotted between the ball center and said intersections and

b. a parabola plotted between said center and said intersections

and a mounting bar carrying portion of box-like cross-section which is structurally integral with the wider end of said beam, said carrying portion having side plates which are extensions of the rear ends of the beam side plates, and having top and bottom plates integrally joined to said carrying portion side plates and integrally and continuously joined to the entire width of the beam top and bottom plates.

4,064,948
POWER WRENCH
Bratt, and Carl Ake Moberg, both of Tyreso, Sweden, assignors to Atlas Copco Aktiebolag, Nacka, Sweden
Filed Mar. 15, 1976, Ser. No. 666,586
Claims priority, application Sweden, Mar. 18, 1975, 7503039
Int. Cl.² B23Q *5/027*
U.S. Cl. 173—12 **7 Claims**

1. A power wrench comprising:

a motor **(14)**,

an output shaft **(12)** powered by said motor **(14)**,

a torque responsive release clutch **(16, 17)** comprising a driving half **(16)** and a driven half **(17)** and being located between said motor **(14)** and said output shaft **(12)**, said release clutch halves **(16, 17)** being angularly displaceable relative to each other between an unloaded position and a released position,

a disengageable torque non-responsive clutch **(70)** located between said release clutch **(16,17)** and said output shaft **(12)**,

cam means **(57,58)** non-rotatably connected to the halves of said release clutch **(16,17)** so as to interengage upon relative rotation of said release clutch halves, and

a maneuver means **(75)** operatively connecting said cam means **(57,58)** to said torque non-responsive clutch **(70)** for disengaging said torque non-responsive clutch upon interengagement of said cam means **(57,58)**,

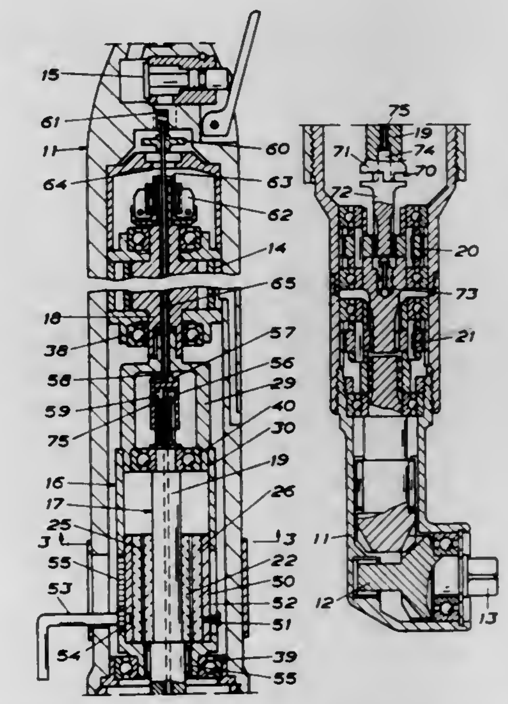

said cam means **(57,58)** being, when said release clutch **(16,17)** is unloaded, interspaced a distance substantially corresponding to the relative angular displacement of said release clutch halves **(16,17)** between said unloaded position and said released position, whereby said cam means **(57,58)** remains inactive until said release clutch halves have reached said released position.

4,064,949
ELECTROPNEUMATIC HAMMER
Franz Chromy, Feldkirch-Levis, Austria, assignor to Hilti Aktiengesellschaft, Schaan, Liechtenstein
Filed Sept. 10, 1976, Ser. No. 722,028
Claims priority, application Germany, Sept. 12, 1975, 2540838
Int. Cl.² E21C *3/00*
U.S. Cl. 173—14 **12 Claims**

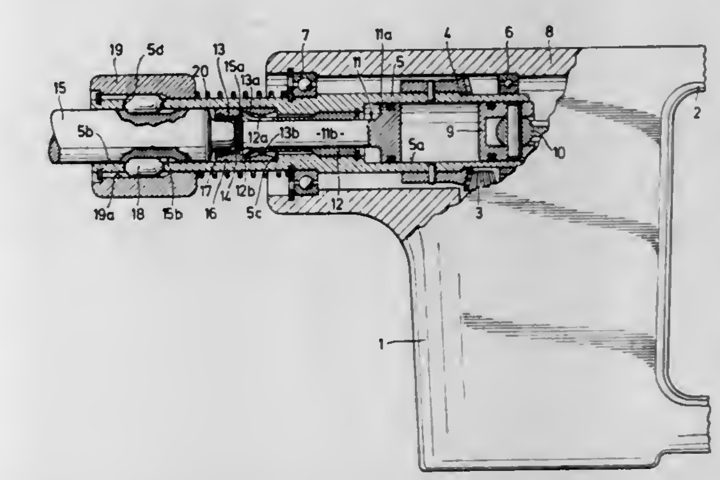

1. In an electropneumatic hammer comprising a housing, an axially extending guide cylinder within said housing, said guide cylinder forming an axially extending bore having a forward end and a rearward end, an exciter piston displaceably mounted within the bore in said guide cylinder, a driving piston displaceably mounted within the bore in said guide cylinder between said exciter piston and the forward end of the bore, wherein the improvement comprises an axially extending

clamping member located within the bore with the axis thereof disposed in parallel relation with the axis of the bore and said clamping member secured against axial displacement in the bore, said clamping member having a first end and a second end with said second end spaced forwardly of said first end toward the forward end of said bore, said driving piston having a first part located adjacent to said exciter piston and a second part extending from said first part toward the forward end of the bore, said second part having an axially extending outer surface thereon arranged to be gripped by said clamping member and said surface extending through said clamping member from the first end toward the second end thereof as said driving piston reciprocates, and said clamping member having a portion thereof being inwardly movable relative to the axis of the bore through said guide cylinder under certain conditions for effecting gripping contact with the outer surface of the second part of said driving piston.

4,064,950
HYDRAULIC DRILLING MACHINE
Pekka Salmi, Tohlopinkatu 5-7 B; Rolf Strom, Kohmankaari 1 B 5, both of 33310 Tampere 31, and Eero Hirvisaari, Kreetantie 7 E 56, 33950 Pirkkala 5, all of Finland
Filed July 19, 1976, Ser. No. 706,574
Int. Cl.² B23Q *5/027*
U.S. Cl. 173—151 **4 Claims**

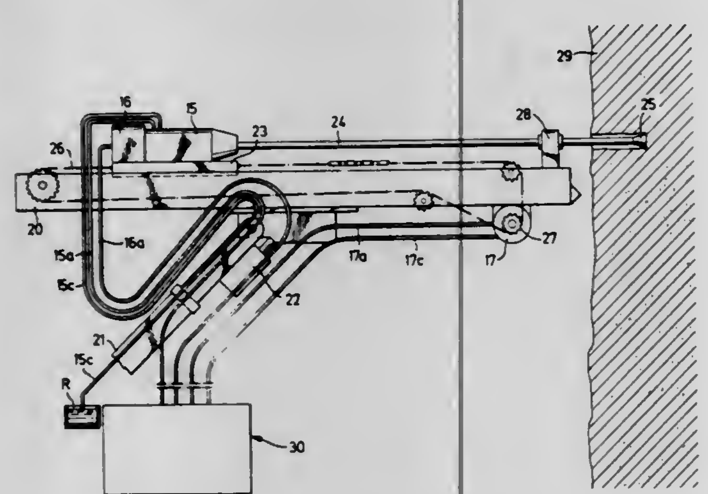

1. In a hydraulic drilling machine including a hydraulic striking apparatus, a rotatable drill rod connected to said striking apparatus at one end and having a bit at the other end, a rotary hydraulic motor for turning said rod and bit and means including a hydraulic feed motor for advancing said striking apparatus and said rod and bit in an axial direction, hydraulic pressure means including hydraulic circuit means for operating said striking apparatus and said hydraulic motor, the improvement wherein said rotary hydraulic motor and said hydraulic feed motor are connected in series in said hydraulic circuit means.

4,064,951
UNDERREAMER HAVING CUTTER ARM POSITION INDICATION
Robert W. Weber, Long Beach, Calif., assignor to The Servco Company, a division of Smith International, Inc., Gardena, Calif.
Filed Mar. 19, 1976, Ser. No. 668,622
Int. Cl.² E21B *47/02*
U.S. Cl. 175—45 **7 Claims**

1. An underreaming tool with combined cutter arm position indicating and cutter cleaning means comprising:
at least one elongated body portion;
at least one cutter arm pivotally mounted on said body portion and a cutter on said arm;
means for pivotally positioning said at least one cutter arm in a cutting position or a different non-cutting position; and
at least one fluid passage in said body portion comprising an input port for receipt of fluid and an output port, said output port being displaced from the cutter arm pivot in said body portion;
said cutter arm having a portion which is adjacent said body portion and substantially blocks said output port when said cutter arm is in said non-cutting position,

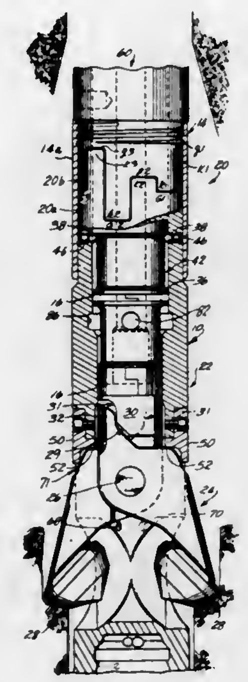

said passage adjacent and including said output port being arranged to direct fluid, passing therethrough, in the direction of said cutter when said cutter arm is in said cutting position.

4,064,952
DEVICE ATTACHABLE TO POWER DRILLS FOR REMOVAL OF MATERIAL RELEASED DURING DRILLING
Helmut Lechner, 3590 Forellenweg 1, Bad Wildungen-Wega, Germany
Filed Feb. 23, 1976, Ser. No. 660,709
Claims priority, application Germany, Feb. 28, 1975, 7506186[U]; Apr. 23, 1975, 2517926
Int. Cl.² E25D *17/14*
U.S. Cl. 175—209 **26 Claims**

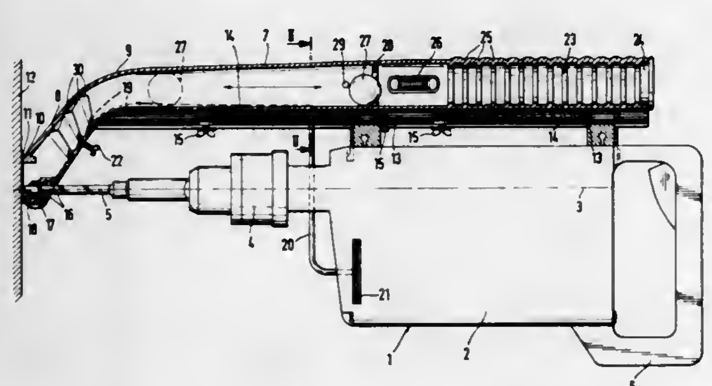

1. A device attachable to a power drill for the collection and removal of material released during drilling comprising, in combination, a collecting tube; clamp means for mounting said tube parallel to the longitudinal axis of the power drill, said power drill having a drill bit; and a spout surrounding the drill bit in proximity of the tip area of the drill bit; ball closure means forming a return closure in said spout; and locking means on said ball closure means for holding said closure means in open position.

4,064,953
SHEAR SUB FOR DRILL STRING
Kenneth L. Collins, Berwick, La., assignor to Gulf Oil Corporation, Pittsburgh, Pa.
Filed June 22, 1976, Ser. No. 698,328
Int. Cl.² E21B *41/00*
U.S. Cl. 175—321 **5 Claims**

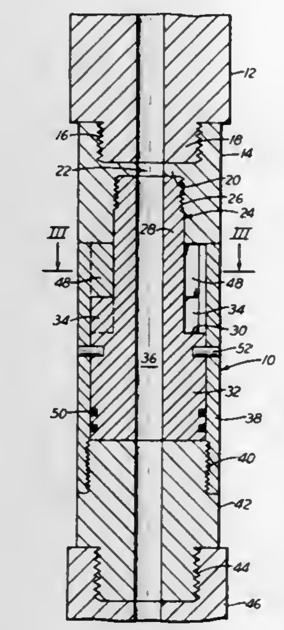

1. A shear sub for installation in a drill string for drilling wells between an upper portion and a lower portion thereof comprising:
a. a tubular mandrel having a cylindrical body and a neck extending vertically from said body,
b. said tubular mandrel being connected to one of said upper portion and said lower portion of the drill string for movement unitarily therewith,
c. a cylindrical housing enclosing the body movable rotatively and limitedly longitudinally on the outer surface of the body of the tubular mandrel,
d. said housing being securely connected to the portion of the drill string other than the portion to which the mandrel is connected,
e. spaced-apart lugs extending inwardly from the housing toward the neck,
f. spaced-apart splines protruding from the mandrel between the neck and the housing,
g. and shear means rupturable by torque engaging the housing and mandrel to hold the housing and mandrel in a set position with the lugs disengaged from the splines,
h. the spacing of the lugs and splines allowing movement of the lugs into spaces between the splines on shearing of the shear means.

4,064,954
COMPUTING POSTAL SCALE AND METHOD WITH TARING CAPABILITY
Frank C. Rock, Santa Rosa, Calif., assignor to National Controls, Inc. Santa Rosa, Calif.
Division of Ser. No. 510,467, Sept. 30, 1974, Pat. No. 3,951,221. This application Dec. 19, 1975, Ser. No. 642,483
Int. Cl.² G01G *23/22, 13/14*
U.S. Cl. 177—25 **9 Claims**

1. In a computing postal scale: a base, a load cell mounted on the base and adapted to provide an electrical signal corresponding to the force applied thereto, load receiving means mounted on the load cell and supported thereby, said load receiving means having an area substantially larger than the load cell for receiving objects to be posted, means responsive to the signal from the load cell for providng digital signals representative of the weight of an object received by the load receiving means, means for storing postal rate information in digital form, means for storing a signal corresponding to the weight on the load receiving means at a predetermined time, means for combining the stored signal with the signals representative of weight to effect subtraction of the weight represented by the stored signal from the weight represented by the signals representative of weight and provide a signal represen-

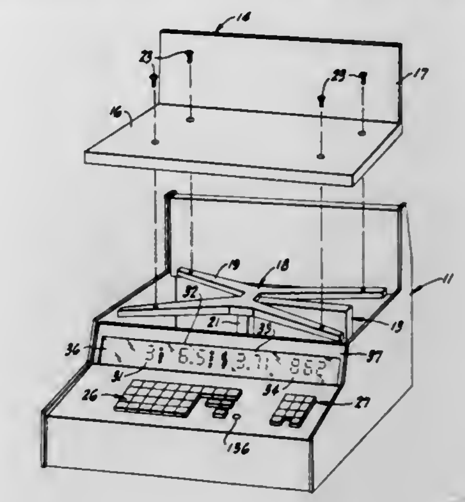

tative of net weight, and means for combining the signal representative of net weight with the rate information to provide a signal representative of the cost of sending the object.

4,064,955
VEHICLE WEIGHING SCALE
George J. Dyck, Saskatoon, Canada, assignor to Canadian Patents and Development Limited, Ottawa, Calif.
Filed Sept. 9, 1976, Ser. No. 721,824
Int. Cl.² G01D *19/02*
U.S. Cl. 177—134 **8 Claims**

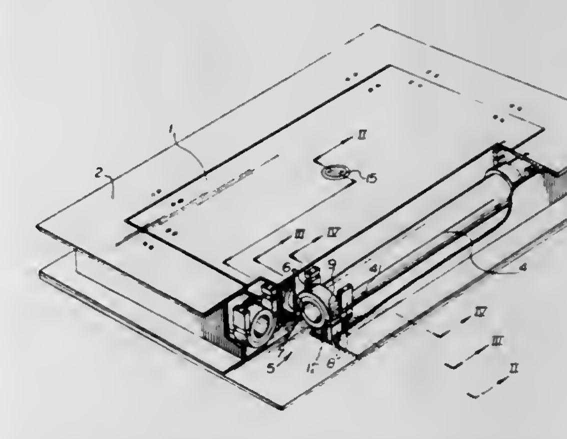

1. A scale for weighing vehicles in motion comprising:
a. a load supporting platform;
b. a fixed base structure;
c. means for interconnecting the platform with the base structure to allow vertical motion of the platform, the interconnecting means comprising at least three torque transmitting bars arranged around the perimeter of the load supporting platform, and a support and roller assembly associated with each end of each torque transmitting bar, each of said support and roller assemblies comprising first, second, third, and fourth support element pairs, the first support element pair being attached to the platform, the second and third pair being attached to horizontally opposite sides of the torque bar and the fourth pair being attached to the base structure, one of each support element pair having an upwardly facing bearing surface and the other of each pair having a downwardly facing bearing surface, and rollers disposed between adjacent upwardly and downwardly facing bearing surfaces of the first and second support element pairs, and between adjacent surfaces of the third and fourth pairs; and
d. a load measuring device operating with low vertical travel disposed between the platform and the base structure.

4,064,956
VEHICLE DRIVE AND SUSPENSION SYSTEM
Allan J. Wildey, Lakeside, Canada, assignor to Eaton Yale Ltd., London, Canada
Filed Jan. 2, 1976, Ser. No. 646,223
Int. Cl.² B62D *61/10*
U.S. Cl. 180—24.05 **9 Claims**

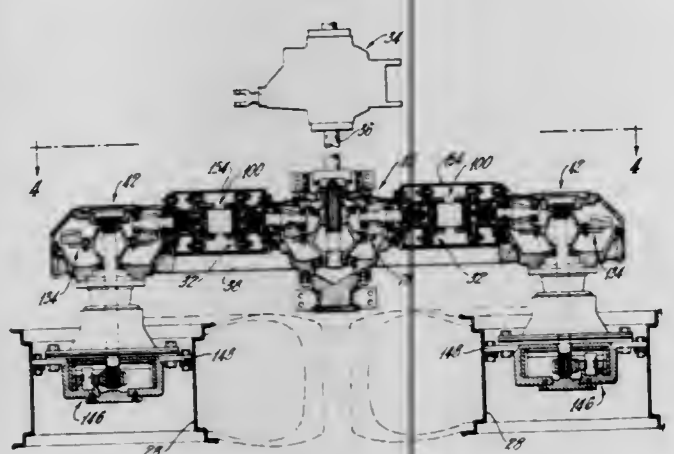

1. In a vehicle having a frame, a differential unit attached to said frame;

a pair of walking beams attached to said frame for rotation about an axis transverse to the longitudinal vehicle axis, each of said walking beams having a central aperture and end apertures spaced apart from said central aperture at opposite ends of said walking beam; a central power transfer unit received in said central aperture, said central power transfer unit comprising a housing fastened to said walking beam, a first input shaft supported for rotation in said housing and operatively connected to the output of said differential, a first input gear mounted on said first input shaft for rotation therewith, a pair of generally opposed first output shafts supported in said housing, and a pair of first output gears mounted on said first output shafts for rotation therewith and in meshing engagement with said first input gear; a pair of wheel end power transfer units received in said end apertures, each of said wheel end power transfer units comprising a housing fastened to said walking beam, a second input shaft supported for rotation in said housing, a second input gear mounted on said second input shaft for rotation therewith, a second output shaft supported for rotation in said housing and operatively connected to one of said drive wheels, and a second output gear mounted on said second output shaft for rotation therewith and in meshing engagement with said second input gear; trunnion bearing means attached to said central power transfer unit with the axis of said trunnion bearing means coincident with the axis of rotation of the input shaft of said central transfer units; attachment means in bearing engagement with said trunnion bearing means and attached to said vehicle frame to support said walking beam for rotation about said axis of rotation; and coupling means connected each of said pair of first output shafts of said central transfer unit with said second input shafts of said wheel end transfer units, each of said coupling means comprising a first annular member having internal gear teeth formed therein, a second annular member having internal gear teeth formed therein, and a shaft member connecting said first and second annular members, said shaft member having first and second sets of external gear teeth formed thereon for meshing engagement with said internal gear teeth, said gear teeth being cut to permit rocking movement of said shaft member within said annular members.

4,064,957
THREE-WHEEL MOTORCYCLE
Harold D. Parham, R.R. 1, White Plains, Ky. 42464
Filed June 4, 1976, Ser. No. 693,119
Int. Cl.² B62D *61/06*
U.S. Cl. 180—27 **6 Claims**

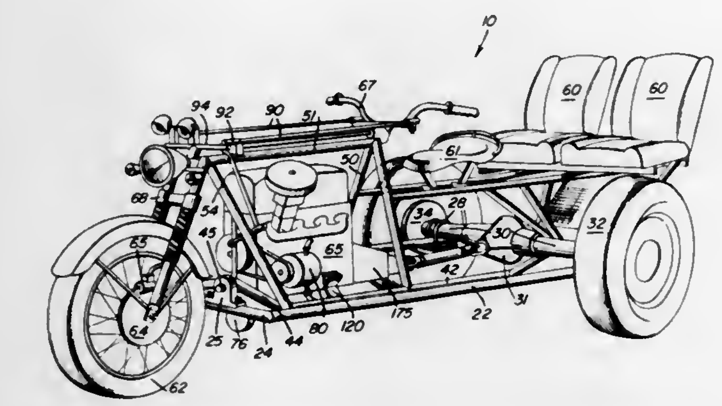

1. In a three-wheel motorcycle device having a prime mover, structure operable with the prime mover to operate the device, and structure used for seating, the improvement comprising:

a first support frame, the first support frame having an axle mounted for rotation on the rear portion thereof, a wheel being mounted on each end of the axle;

a differential mechanism mounted centrally of the axle;

a second support frame mounted for pivotal movement on the first support frame, a third wheel being mounted at the forward portion thereof, the prime mover, structure associated therewith, and seating structure being mounted on the second support frame, the major portion of the gross weight of the motorcycle device thus being carried by the second support frame;

pivotal drive transmission means connecting the prime mover to the differential mechanism for rotating the axle;

pivotal handle means mounted to the second support frame proximate to at least a portion of the seating structure for use by an operator to steer the motorcycle device; and,

means responsive to pivotal movement of the handle means to tilt the second support frame relative to the first support frame when the motorcycle device is turned into a banking maneuver.

4,064,958
TRANSMISSION FOR SINGLE-SHAFT GAS TURBINE ENGINE
Keijiro Kinoshita, Yokohama, Japan, assignor to Nissan Motor Co., Ltd., Japan
Continuation of Ser. No. 514,915, Oct. 15, 1974, abandoned. This application Apr. 28, 1976, Ser. No. 681,172
Claims priority, application Japan, Oct. 23, 1973, 48-119119
Int. Cl.² B60K *17/10*
U.S. Cl. 180—66 A **1 Claim**

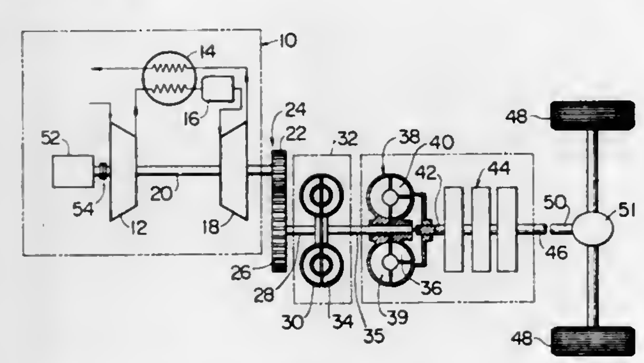

1. In an automobile, a single-shaft gas turbine engine having a combustor, a compressor and a turbine, a single-shaft directly connecting said compressor and said turbine;

a hydraulic coupling having an impeller element driven from said turbine and a turbine element hydraulically driven by said impeller element;

said hydraulic coupling having a slippage band comprising a range of speeds in which it slips at lower speeds of rotation of said impeller element corresponding to speeds at which said engine will stall;

a reduction gear directly connected to said single shaft and having an output shaft thereof connected to said impeller element;

a hydraulic torque converter having an impeller element connected directly to the turbine element of said hydraulic coupling to be driven thereby, a stator, and a turbine element hydraulically driven from the last-mentioned impeller element;

said hydraulic torque converter having a slippage band comprising a range of speeds in which it slips, greater than the speeds of rotation at which said hydraulic coupling slips and corresponding to speeds at which said engine will stall;

a forward-reverse change speed gearbox having an input shaft directly connected to the turbine element of said hydraulic torque converter to be driven thereby and an output shaft;

said turbine developing a torque in which said engine will not stall in an upper range of speeds of said torque converter slippage band;

at least one driving wheel;

means drivingly connecting said wheel to the output shaft of said change speed gearbox;

whereby in a range of lower speeds of rotation of the turbine said hydraulic coupling slips and in a range of speeds of rotation of said turbine higher than the last-mentioned range the hydraulic torque converter slips and said turbine is not loaded at stalling speeds thereof and is loaded only at speeds in which it develops a torque at which it will not stall.

4,064,959
STEERING ARRANGEMENT FOR A DOUBLE ARTICULATED WHEEL TRACTOR
Robert N. Stedman, Chillicothe, and Gerald P. Simmons, Washington, both of Ill., assignors to Caterpillar Tractor Co., Peoria, Ill.
Continuation of Ser. No. 636,502, Dec. 1, 1975, abandoned. This application Mar. 4, 1977, Ser. No. 774,335
Int. Cl.² B62D *5/06*
U.S. Cl. 180—139 **16 Claims**

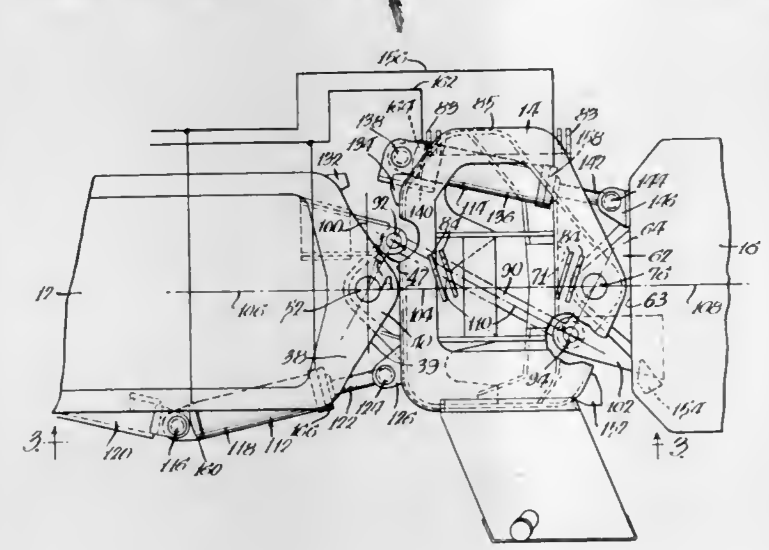

1. A double articulated vehicle comprising: a carriage having a longitudinal axis extending from the front to the rear thereof, a rear frame having a front wall pivotally connected to said carriage along a vertical axis intersecting said longitudinal axis of the carriage, a front frame pivotally connected to said carriage along a vertical axis intersecting said longitudinal axis of the carriage, a link connected to the rear frame for pivotal movement about a vertical axis located on one side of said longitudinal axis, said link being connected to the front frame for pivotal movement about a vertical axis located on the opposite side of said longitudinal axis, a first ram pivotally connected to the rear frame rearward of the front wall and to the rear of the carriage with both said connections being on the side of said longitudinal axis opposite from the connection of said link to said rear frame, a second ram pivotally mounted to the rear of the front frame and to the rear of the carriage with both said connections being on the side of said longitudinal axis opposite from the connection of said link to said front frame, and means for elongating one ram and shortening the other ram to articulate the front frame and rear frame relative to the carriage with the link transmitting movement from one frame directly to the other frame.

4,064,960
NOISE BARRIER
Norio Murakami, Kawasaki, Japan, assignor to Showa Koji K.K., Kawasaki, Japan
Filed Apr. 23, 1976, Ser. No. 679,713
Claims priority, application Japan, Aug. 27, 1975, 50-102887; Dec. 23, 1975, 50-152848; Dec. 27, 1975, 51-176324; Jan. 12, 1976, 51-2148
Int. Cl.² G10K *11/00*
U.S. Cl. 181—210 **13 Claims**

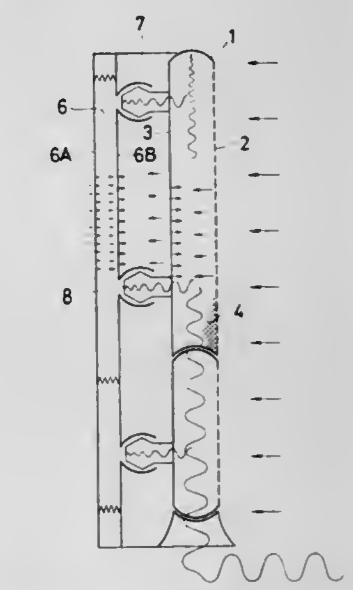

1. A noise barrier comprising (1) a hollow cell type block composed of (a) a perforated sound-absorbing plate falling on the side confronting the noise source, (b) a sound-insulating plate disposed opposite said perforated sound-absorbing plate, (c) partition plates disposed between said two plates so as to divide the intervening space between said two plates into a plurality of cavities and (d) a sound-absorbing material placed to fill said cavities, (2) a free spacing plate disposed parallel to said sound-insulating plate and across a space therefrom so as to enclose a free air layer in conjunction with said sound-insulating plate and (3) vibration-repressing means coupling said hollow cell type block and said free spacing plate.

4,064,961
SLANTED CAVITY RESONATOR
Gudin Tseo, San Diego, Calif., assignor to Rohr Industries, Incorporated, Chula Vista, Calif.
Filed Apr. 5, 1976, Ser. No. 673,398
Int. Cl.² G10K *11/04;* **F02K** *1/26;* **B64D** *33/06*
U.S. Cl. 181—213 **9 Claims**

1. A combination engine plug and muffler for a fan jet aircraft engine comprising:

a central plug structure formed of a plurality of inward slanting, spaced apart elements, said elements fixedly attached to a center member positioned co-axial with the center line of said engine and fixedly attached thereto, said spaced apart elements forming outwardly open and in-

wardly terminating cavities therebetween and pervious material attached to the outer periphery of said elements

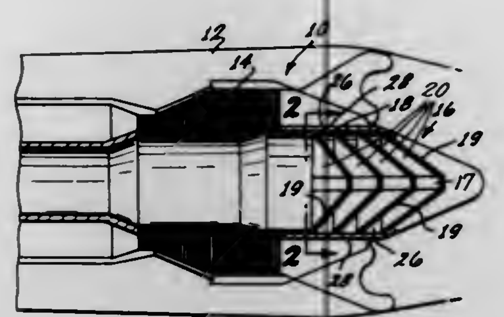

for covering the spaces between said spaced apart elements.

4,064,962
MUFFLER METHOD AND APPARATUS
Raymon E. Hunt, Longview, Tex., assignor to Garlock Inc.
Continuation of Ser. No. 436,149, Jan. 24, 1974, abandoned. This application Oct. 14, 1975, Ser. No. 622,039
Int. Cl.² F01N *1/08*
U.S. Cl. 181—272 **27 Claims**

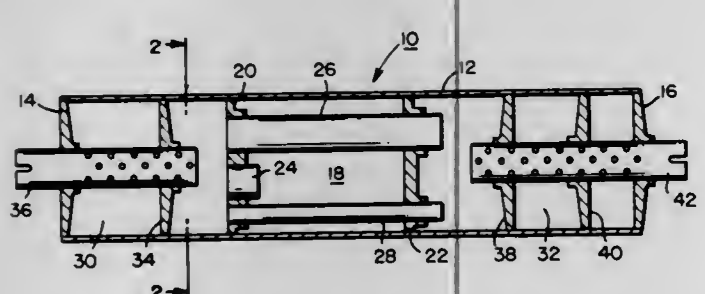

1. The method of reducing the low frequency exhaust noise of a high output high speed diesel engine without increasing the volume of a muffler and without substantially increasing the back pressure imposed by said muffler on the engine, comprising positioning a pair of imperforate spaced-apart baffle plates in said muffler to define a low frequency resonator chamber therebetween, providing a tuning tube through that one of said baffle plates closest to an inlet end of said muffler, said tuning tube being imperforate in said chamber and having an inlet opening thereinto in a first chamber immediately upstream from said low frequency resonator chamber and having an outlet opening therefrom in said low frequency resonator chamber, carrying a portion of the entire downstream net exhaust gas flow through said low frequency resonator chamber through each of a plurality of longitudinal transfer tubes, that are imperforate in said chamber, extend between said pair of baffle plates, have an inlet opening thereinto in a chamber upstream from said low frequency resonator chamber and have an outlet opening therefrom in a chamber downstream from said low frequency resonator chamber, and carrying exhaust gas directly downstream from said downstream chamber.

4,064,963
EXHAUST FOR INTERNAL-COMBUSTION ENGINE
Peter Kaan, Vienna, and Gunther Rudolf Beke, Kammersdorf, both of Austria, assignors to Vereinigte Metallwerke Ranshofen-Berndorf Aktiengesellschaft, Braunau am Inn, Ranshofen, Austria
Filed May 28, 1976, Ser. No. 691,148
Claims priority, application Austria, May 30, 1975, 4107/75
Int. Cl.² F01N *7/16, 1/08*
U.S. Cl. 181—244 **10 Claims**

1. An exhaust for an internal-combustion engine, comprising:

a muffler of a corrosion-resistant malleable metallic material consisting essentially of aluminum, said muffler having a body with a generally cylindrical peripheral wall and a pair of end caps adjoining said wall, at least said end caps being provided with a protective inner layer of heat-resistant material;

two transverse partitions dividing the interior of said body into two outer compartments bounded by said end caps and a central compartment between said partitions;

a pair of nonaligned, substantially axially extending tubular elements each traversing one of said partitions for estab-

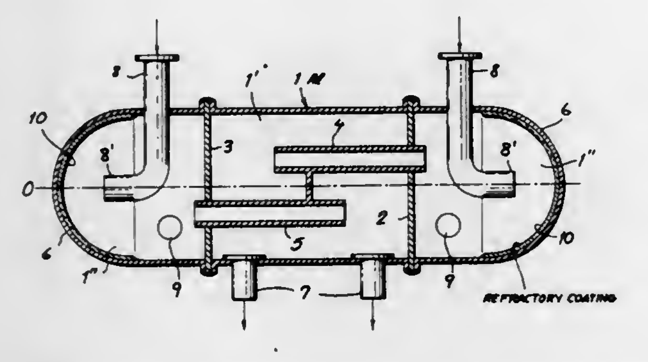

lishing communication between said central compartment and a respective outer compartment;

a pair of inlet pipes extending substantially radially through said wall into said outer compartments for admitting hot exhaust gases into said muffler, said pipes terminating in bent extremities open toward said end caps whereby the incoming exhaust gases impinge upon said protective layer; and

outlet means in said wall between said partitions for discharging the exhaust gases from said muffler.

4,064,964
SEISMIC SIGNAL GENERATING APPARATUS
John A. E. Norden, 709 Normandie Drive, Norman, Okla. 73069
Filed July 12, 1976, Ser. No. 704,174
Int. Cl.² G01V *1/14*
U.S. Cl. 181—114 **19 Claims**

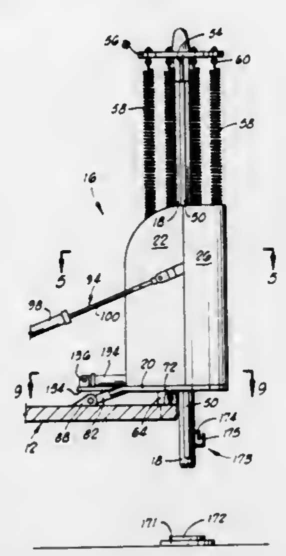

1. A seismic signal generating apparatus comprising:

a vehicle including a rearwardly extending bed;

a ram-supporting framework pivotally mounted on the bed for pivotation about a horizontal axis;

a ram reciprocably mounted in the framework for vertical reciprocation in one position of the framework;

a plurality of catapult tension springs connected between the framework and the upper end of the ram for forcibly reciprocating the ram from an elevated status in which the catapult springs are tensioned, to a lowered, impacting position in which the springs are tensioned to a lesser degree; and

a pair of superimposed metallic striker plates positioned directly below the ram upon the ground.

4,064,965
STETHOSCOPE
Alberta Mae Brown, 1241 W. 53rd St., Los Angeles, Calif. 90037
Filed Mar. 11, 1976, Ser. No. 666,178
Int. Cl.² A61B *7/02*
U.S. Cl. 181—131 **3 Claims**

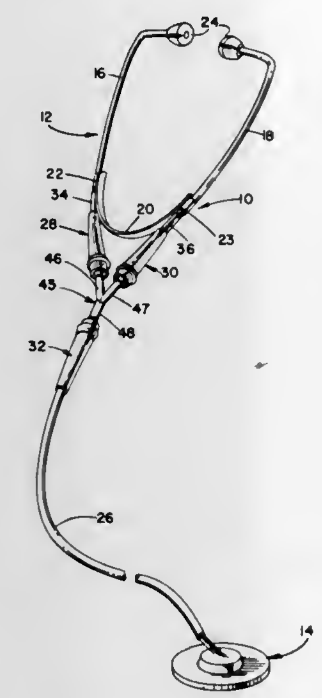

1. In combination with a stethoscope of the type including a head set and a sound-pick-up diaphragm used to detect sounds produced in the body, the improvement comprises:

a plurality of removable connector plugs wherein at least two of said plugs are secured to the head set, and wherein at least one of said plugs is attached to sound-pick-up diaphragm, each of said plugs having a central bore disposed therein for communication therethrough, and between said head set and said sound-pick-up diaphragm, each of said connector plugs including an extended, flexible, tubular member affixed to one end thereof for permanent attachment of the respective head set and sound-pick-up diaphragm, and wherein an enlarged, tapered opening is arranged in the opposite ends of said plugs;

an integrally formed, tubular, yoke member having interconnecting passages disposed therein, said yoke being formed to be removably coupled to each of said plugs, whereby sound is transmitted from said diaphragm to said head set when said diaphragm is positioned for contact with the body, said yoke member comprising three extended leg members formed in a substantially "Y"-shaped configuration; and

engaging means integrally formed about said leg members for removable engagement within said enlarged end of said bore of said connector plugs, thereby allowing said head set and said sound pick-up to be connected or disconnected when required, and wherein other sound-pick-up diaphragms can be readily interchanged with said head set.

4,064,966
LOUDSPEAKER APPARATUS
William D. Burton, 2946 Gertrude Ave., La Crescenta, Calif. 91214
Filed Mar. 11, 1976, Ser. No. 666,006
Int. Cl.² H05K *5/00*
U.S. Cl. 181—144 **2 Claims**

1. A loudspeaker apparatus comprising:

an enclosure having an internal sound chamber;

at least a pair of loudspeaker units secured in said sound chamber in fixed spaced apart relationship, each of said loudspeaker units facing in opposite directions in back-to-back relationship;

an air column carried in said enclosure having one end terminating adjacent the front of a selected one of said loudspeaker units and the other end terminating in close proximity to said other loudspeaker unit and having a length so that acoustic wave energy radiation from said other loudspeaker unit and from said air column is additive over a predetermined frequency range;

said air column is folded over upon itself so as to reverse the radiation direction of acoustic wave energy radiating from said selected loudspeaker unit;

a partition fixly carried in said enclosure having opposite wall surfaces defining a portion of said air column;

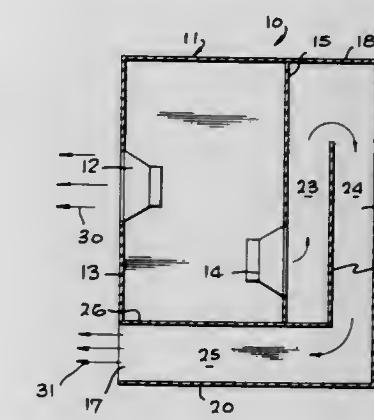

said partition associated with said selected loudspeaker unit for elongating and folding said air column so as to achieve said reverse direction of acoustic wave energy radiation;

said partition further includes a wall separating adjacent portions of said air column and a third portion of said air column extending at a right angle to said adjacent portions;

each of said loudspeaker units includes a vibrating cone and wherein said cones are electrically coupled in an out-of-phase relationship so that said cones move in unison.

4,064,967
STEERING MECHANISM
Mac R. Doolittle, Charlotte, Mich., assignor to Clark Equipment Company, Buchanan, Mich.
Filed July 23, 1976, Ser. No. 707,961
Int. Cl.² B62D *5/10, 7/10*
U.S. Cl. 180—155 **20 Claims**

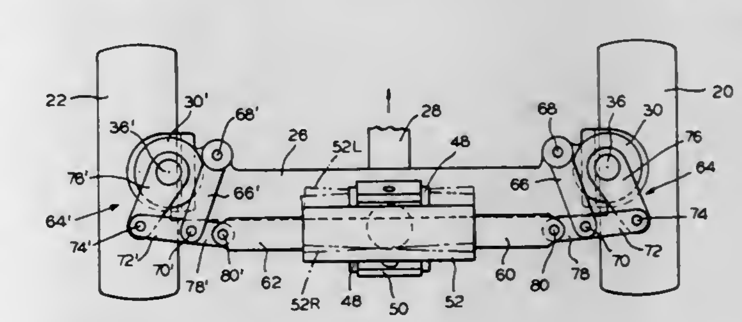

1. A steering mechanism for wheeled vehicles having right and left steer wheels comprising a modified four-bar steer linkage operatively connected to each said wheel, and tie rod means connected to both said four-bar linkages for actuating said linkages and wheels to steer the vehicle in either direction, each of said linkages comprising an intermediate steering link, a steering arm connected at one end pivotably to said link, pivot means connected rigidly to the opposite end of said steering arm and connected to the adjacent wheel for steering the wheel, a guide link connected at one end pivotably to said intermediate link and a relatively fixed member to which the opposite end of said guide link is pivotably connected, said intermediate link including a rigid extension which extends a predetermined distance inwardly beyond the connection thereto of said guide link, said tie rod means being connected pivotably at each end thereof to an adjacent inner end of the rigid extension of the respective intermediate link.

4,064,968

SCAFFOLD FOR WORKING ON A PIPELINE MOVABLE RELATIVE TO A BASE

William B. Cook, Jr., Orange, Calif., assignor to Santa Fe International Corporation, Orange, Calif.

Filed May 20, 1976, Ser. No. 687,980

Int. Cl.² E04G *3/16*

U.S. Cl. 182—13 **2 Claims**

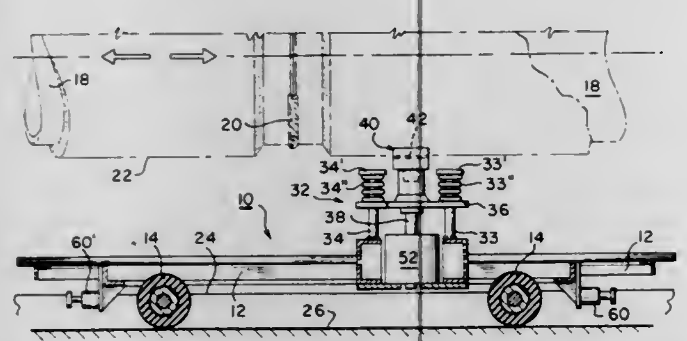

1. A scaffold adapted to follow the movements of a coated pipeline relative to a base having a depressed trackway, comprising:

a platform supported on a pair of spaced cylindrical rollers having their longitudinal axes transverse to the center line of the scaffold, said trackway limiting the lateral movements of said rollers;

a fluid-operated system including extensible means movable between said platform and said pipeline;

a flexible pipe support member carried by said extensible means for frictionally engaging said pipeline, said member having an arcuate surface adapted to engage the coating of the pipeline and being adapted to allow relative movements between said member and said pipeline; and

said system including operating means for selectively moving said extensible means with said pipe support member into and out of frictional engagement with said pipeline.

4,064,969

OIL DRAIN BAG

Charles A. Black, 777 S. Lawrence St., Montgomery, Ala. 36101

Filed Nov. 4, 1976, Ser. No. 738,833

Int. Cl.² F16N *33/00*

U.S. Cl. 184—1.5 **3 Claims**

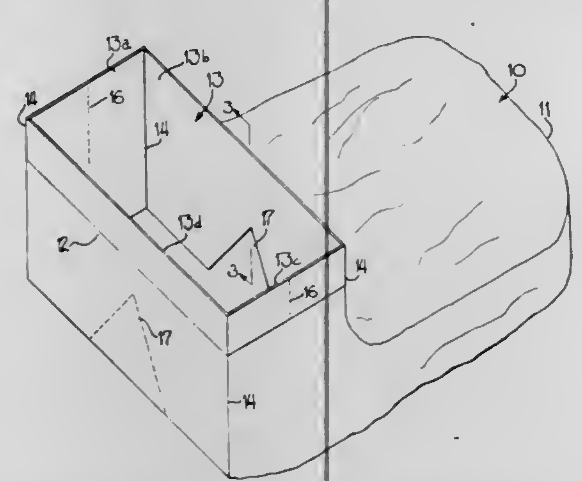

1. In a container adapted to rest on a support beneath a spout, hole or the like to receive liquid therefrom,

a. an elongated, flexible, sack-like body having a mouth and being of a size to contain a predetermined amount of liquid,

b. a flat-foldable insert of substantially rigid material permanently attached to the inside of the mouth of the sack adjacent the upper end of the sack and extending into the sack a minor length of the body of the sack, said insert when unfolded forming a rigid column which holds the sack mouth open and holds the mouth of the sack above the level of the major length of the sack when the sack rests on a substantially flat surface, and

c. the lower edge of the insert being unconnected to the sack body thereby forming a passage through which liquid may pass from the unfolded insert into the sack.

4,064,970

CONVEYOR LUBRICATING APPARATUS

Gordon P. Reeves, 2519 43rd St., SW., Grand Rapids, Mich. 49509

Filed Mar. 10, 1975, Ser. No. 556,973

Int. Cl.² F16N *7/34*

U.S. Cl. 184—15 B **26 Claims**

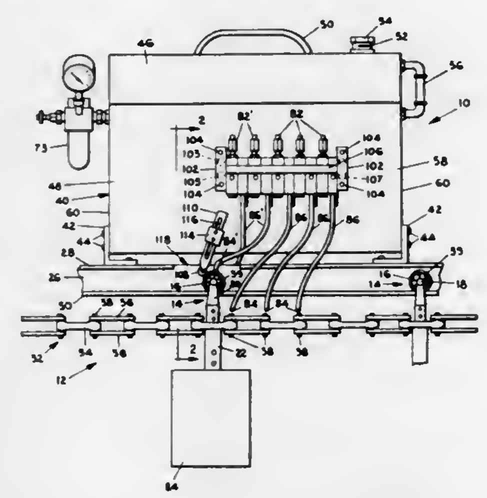

1. Conveyor lubricating means for lubricating moving parts of a conveyor mechanism wherein a series of interconnected wheeled trolleys ride along a track, said lubricating means comprising:

oil supply means for supplying liquid lubricant to the lubricating means;

actuator valve means for controlling the flow of pressurized air to the lubricating means, said actuator valve means having inlet means for receiving air from an air supply means and outlet means for delivering air from the actuator means to the lubricating means, said actuator valve means having an open position wherein air is permitted to flow to the lubricating means and a closed position wherein the flow of air to the lubricating means is blocked;

oil dispensing valve means having air inlet means for receiving pressurized air from the outlet means of the actuator valve means, oil inlet means for receiving liquid lubricant from the outlet of the oil supply means, and oil outlet means for delivering liquid lubricant from the oil dispensing valve means, said oil dispensing valve means being actuated by the receipt of pressurized air through the air inlet means and being adapted to discharge a predetermined quantity of liquid lubricant from the oil outlet means each time the oil dispensing valve is actuated, said oil dispensing means being actuated only once each time the actuator valve means is opened and delivering the same predetermined quantity of liquid lubricant from the oil outlet means regardless of the amount of time the actuator valve remains open before closing, said oil dispensing valve means comprising a hollow housing including an oil chamber of predetermined volume and an air driven plunger slidably mounted in the housing for reciprocation into and out of the oil chamber, the plunger having a predetermined stroke into the oil chamber, the oil inlet and outlet means being formed in the oil chamber, with the oil outlet means including means to prevent liquid lubricant from being drawn back into the oil chamber when the plunger is withdrawn from the oil chamber, said air inlet means being formed in an air chamber adjacent the end of the plunger facing away from the oil chamber such that the introduction of pressurized air into the air inlet means drives the piston into the oil chamber and causes the ejection of a predetermined quantity of liquid lubricant from the oil outlet means, said oil dispensing valve means including resilient biasing means for urging the plunger out of the oil chamber when the air pressure in the air chamber is relieved;

oil conduit means having a conduit inlet connected to the oil dispensing valve oil outlet means and a conduit outlet positioned adjacent a predetermined position on the track, said oil conduit means being adapted to convey liquid lubricant from the oil dispensing valve oil outlet means to said predetermined position when the oil dispensing valve means is actuated;

air assist means for urging mechanically dispensed liquid lubricant from the oil conduit outlet to said predetermined position, said air assist means including air conduit means having an inlet in communication with the outlet means of the actuator valve means and an outlet adjacent said predetermined position and adjacent but not in said oil conduit outlet, said air assist means being adapted to convey pressurized air from the air conduit outlet means over the outside of the oil conduit outlet to said predetermined position when the actuator valve means is open;

nozzle means connected to the outlets of the air and oil conduit means, said nozzle means being formed such that liquid lubricant dispensed from the outlet of the oil conduit is entrained in the air leaving the outlet of the air conduit and urged from the nozzle means to said predetermined position; and

actuating means for temporarily opening the actuator valve means each time a part to be lubricated reaches said predetermined position on the track such that liquid lubricant discharged from the nozzle means is deposited on the part.

4,064,971

ELEVATOR SERVICE INFORMATION APPARATUS

Tatsuo Iwasaka; Takashi Kaneko, both of Katsuta, and Seiichi Shimazaki, Kamagaya, all of Japan, assignors to Hitachi, Ltd., Japan

Filed May 3, 1976, Ser. No. 682,343

Claims priority, application Japan, May 12, 1975, 50-54538

Int. Cl.² B66B *3/00*

U.S. Cl. 187—29 R **9 Claims**

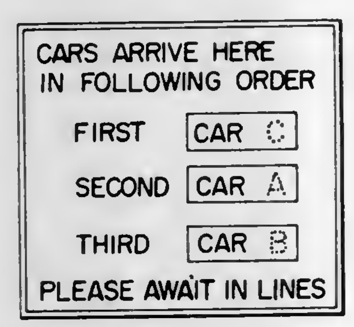

1. A service information apparatus for an elevator system including a plurality of elevator cars installed in juxtaposition for serving a plurality of floors and means for detecting positions of said cars, comprising means for predicting an order in which the elevator cars arrive at a predetermined floor from position signals delivered from said position detecting means, and means for giving information about the predicted arrival order of the elevator cars at the predetermined floor.

4,064,972

CALIPER BRAKE FOR BICYCLES FOR MAINTAINING EQUAL DISTANCE BETWEEN BOTH BRAKE SHOES AND A WHEEL THEREBETWEEN

Kiyoshi Ohtani, Ageo, and Kikuzo Takamiya, Kitamoto, both of Japan, assignors to Bridgestone Cycle Co. Ltd., Tokyo, Japan

Filed Dec. 2, 1976, Ser. No. 746,870

Claims priority, application Japan, July 12, 1976, 51-81955

Int. Cl.² B62L *3/00*

U.S. Cl. 188—24 **11 Claims**

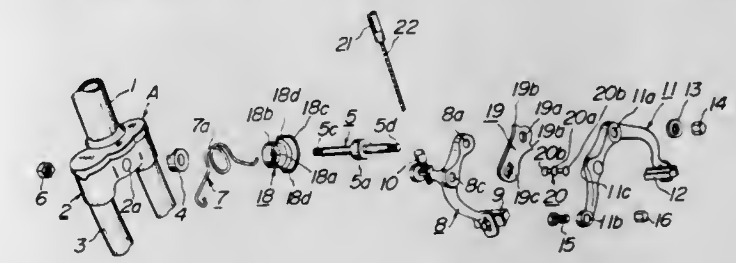

1. a caliper brake for use on a bicycle, comprising:

left and right caliper arms rotatably fitted to a pivot shaft and having at their ends brake shoes adapted to be urged against a rim of a wheel of a bicycle,

a rocking arm having a base portion, for pivotally mounting to a frame of a bicycle, between said caliper arms on said pivot shaft in a semi-fixed condition, the rocking arm having at its end a through-hole, opposite to which the left and right caliper arms each have bottomed holes, and

a universal joint lever having at its middle portion a midle protrusive ball portion and at each end an end protrusive ball portion, said middle protrusive ball portion fitting in said through-hole of the rocking arm and said end protrusive ball portions fitting in said bottom holes of the left and right caliper arms, respectively, for maintaining the distance of free gaps between left and right brake shoes and a bicycle wheel rim always substantially equal.

4,064,973

ACTUATING AND ADJUSTING MECHANISM FOR DISC BRAKES

Brian Charles Deem; Matthew Edward Markert, and Bruce Earl Latvala, all of Elyria, Ohio, assignors to The Bendix Corporation, South Bend, Ind.

Filed Nov. 18, 1976, Ser. No. 742,802

Int. Cl.² F16D *65/38*

U.S. Cl. 188—71.7 **9 Claims**

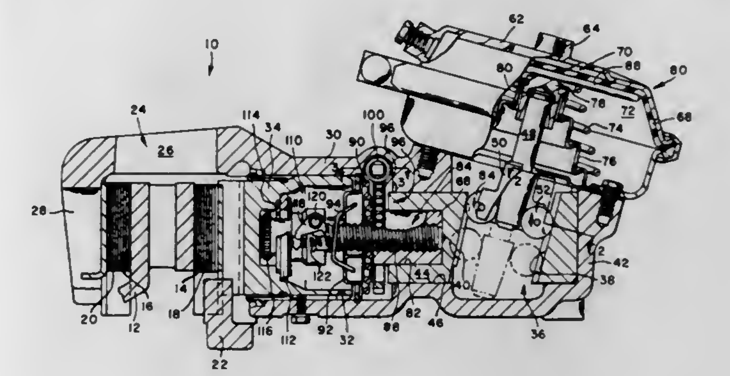

1. In a disc brake, a rotor having a pair of friction faces, a pair of friction elements disposed adjacent each of said friction faces, a torque member mounted adjacent said rotor, a caliper slidably mounted on said torque member and straddling said rotor for urging said friction elements into frictional engagement with said friction faces when a brake application is effected, said caliper including a housing, actuating means carried by said housing, said actuating means including an extensible force-transmitting member slidably mounted in said housing and movable therein in a direction generally parallel to the axis of rotation of the rotor, one end of said extensible member

being adapted to operably engage one of said friction elements for transmitting brake actuation forces to the latter when a brake application is effected and to limit retraction of the one friction element when the brake is released, means engaging the other end of said member for urging the latter toward the rotor when a brake application is effected, automatic adjustment means responsive to movement of said extensible member in excess of a predetermined amount to extend said extensible member and thereby limit retraction of said friction element to said predetermined amount, and manual adjustment means for extending said extensible member to thereby effect a manual adju.tment and for retracting said extensible member to allow the friction elements to move away from said rotor a distance greater than said predetermined amount when the brake is serviced, said extensible member including a pair of coaxial, relatively rotatable components arranged so that one of said components extends from, or retracts into, the other component upon relative rotation between said components, and a piston adapted to be engaged by one end of said one component to provide a force transmitting back to one of said friction elements when a brake application is effected, said automatic adjustment means including a ratchet mechanism carried by said one component and by said piston for effecting rotation of the one component in a direction extending it from the other component when an automatic adjustment of said brake is effected, said manual adjustment means including gearing means for rotating said other component upon rotation of the gearing means, and means frictionally engaging the wall of said housing and engaging said one component, said frictionally engaging means yielding when the force applied to the manual adjusting means attains a level sufficient to overcome the frictionally engaging force between the housing and the frictionally engaging means to prevent damage to the manual adjusting means.

4,064,974

ACTUATOR MOUNTING ASSEMBLY FOR A MULTI-DISC BRAKE

Rene Filderman, Asnieres, France, assignor to Societe Anonyme Francaise du Ferodo, Paris, France

Filed June 8, 1976, Ser. No. 694,015

Claims priority, application France, June 13, 1975, 75.18525

Int. Cl.[2] F16D *55/36*

U.S. Cl. 188—71.3 **8 Claims**

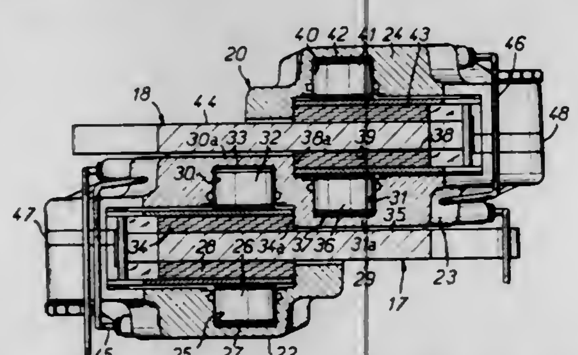

1. In a multi-disc brake comprising at least two rotating discs fixed to each other and spaced apart axially and rigidly fixed on a rotor of said brake, and stirrup means rigidly fixed to a stator of said brake and comprising first and second external portions between which said discs are disposed and at least one intermediate portion disposed between said discs, each said external portion having at least one cylinder and piston assembly for applying a friction lining means associated therewith axially against an adjacent said disc, said at least one intermediate portion therefor insuring at least one pair of cylinder and piston assemblies oriented in opposite axial directions from said at least one intermediate portion to apply friction lining means associated therewith against said discs on opposite sides of said at least one intermediate portion, said cylinder and piston assemblies of said at least one intermediate portion being circumferentially staggered and said cylinders being blind and each extending axially over a depth close to the thickness of said at least one intermediate portion; the improvement in which said first and second external stirrup portions and said at least one intermediate stirrup portion are constituted by separate members, and means releasably fixing together all said stirrup portions in an angular sector of about 180° about the axis of said rotor, said fixing means being disposed in three groups spaced apart peripherally about said discs and disposed substantially at the corners of a triangle, a first of said corner groups of said fixing means being disposed at one end of said first external portion and at one end of said intermediate portion, a second of said corner groups of said fixing means being disposed at one end of said second external portion and at the other end of said at least one intermediate portion, and a third of said corner groups of said fixing means being disposed at the other ends of said first and second external portions and substantially at a central zone of said at least one intermediate portion.

4,064,975

LAMINATED NOISE-PREVENTING SUPPORT FOR THE FRICTION LINING OF A BRAKE SHOE

Rene Gabriel Filderman, Asnieres, France, assignor to Societe Anonyme Francaise du Ferodo, Paris, France

Filed Aug. 3, 1976, Ser. No. 711,352

Claims priority, application France, Sept. 12, 1975, 75.27991

The portion of the term of this patent subsequent to Jan. 29, 1993, has been disclaimed.

Int. Cl.[2] F16D *65/04*

U.S. Cl. 188—73.5 **10 Claims**

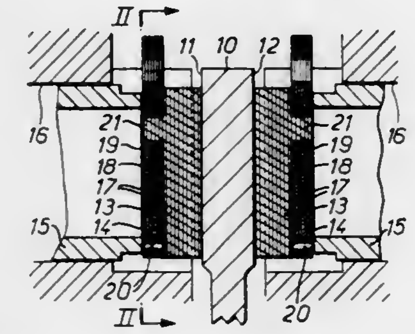

1. A noise-prevention support for a friction lining of a braking member in which the lining is fixed to said support and is adapted to be applied against a friction track by the effect of a force applied to said support over a contact area by force-applying means, said support comprising a stack of a plurality of wholly metallic sheets contiguous to each other over their entire surface and assembled together by localized assembly means, at least part of said assembly means being formed over said contact area by which the force-applying means applies force to said support.

4,064,976

CAR RETARDER SHOE STRUCTURE

Westley C. Muller, 2557 Golden Rain Road No. 7, Walnut Creek, Calif. 94595

Filed Nov. 26, 1976, Ser. No. 745,282

Int. Cl.[2] F16D *65/04*

U.S. Cl. 188—234 **10 Claims**

1. In a car retarder wherein a wheel-engaging shoe member is detachably mounted on a support member by fastening means and includes a protruding rib having a wheel-engaging surface, the improvement comprising the shoe member having a tapered hole therethrough, said hole being proximate to said protruding rib, and fastening means comprising a bolt disposed in said hole, said bolt having an exposed head at one end thereof and a tapered shank portion adjacent said head, the taper of said shank portion conforming substantially to the taper of said hole, said bolt head protruding from and being

outwardly spaced from said hole said exposed and protruding head being shaped to contact said protruding rib in said shoe

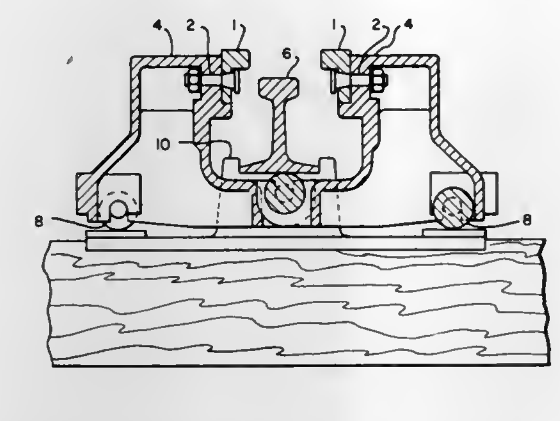

member to prevent rotation of said bolt when disposed in said hole.

4,064,977

FLUID AMPLIFIED SHOCK ABSORBER HAVING DELAVAL NOZZLE

Douglas P. Taylor, Grand Island, N.Y., assignor to Tayco Development, Inc., North Tonawanda, N.Y.

Continuation of Ser. No. 616,800, Sept. 25, 1975, abandoned, which is a continuation of Ser. No. 520,939, Nov. 4, 1974, abandoned, which is a continuation of Ser. No. 399,165, Sept. 20, 1973, abandoned, which is a continuation of Ser. No. 225,570, Feb. 11, 1972, abandoned. This application Apr. 25, 1977, Ser. No. 790,439

Int. Cl.[2] F16F *9/19, 9/34*

U.S. Cl. 188—317 **6 Claims**

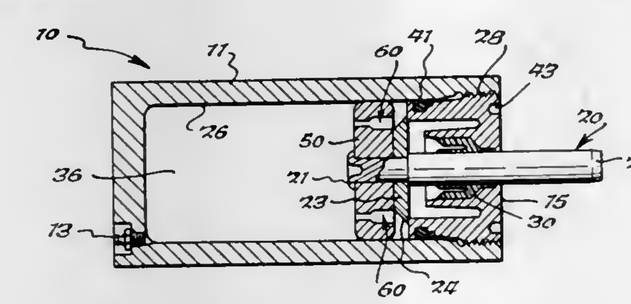

1. A shock absorber comprising:

a housing means charged with a compressible fluid;

sweeping means slidably disposed within said housing for traversing said housing means, said sweeping means separating said housing means into at least two chambers; and

at least one DeLaval nozzle-shaped fluid passage disposed in said sweeping means and providing the exclusive means for the flow of fluid between said separated chambers formed in said housing means, said passage being configured to accommodate the flow of said compressible fluid at velocities approaching Mach 0.6 and greater and to produce a relatively constant resistance force with increasing fluid velocity therethrough, whereby the flow of said fluid through said passage at said velocities provides fluid amplification upon movement of said sweeping means.

4,064,978

ARRANGEMENT AND METHOD OF DRUM BRAKE SPRING ATTACHMENT

Langley H. Wunderlich, Dayton, Ohio, assignor to General Motors Corporation, Detroit, Mich.

Filed Nov. 29, 1976, Ser. No. 745,552

Int. Cl.[2] F16D *65/00*

U.S. Cl. 188—331 **2 Claims**

1. In a drum brake assembly having a pair of brake shoe assemblies with adjacent ends thereof separated by adjustable spacing means, and tension spring means attached to said shoe assemblies and acting substantially parallel to said adjustable spacing means to hold said shoe assembly ends and said adjustable spacing means in operating relation, the improvement in which:

each of said shoe assemblies has a web section with a spring-receiving aperture therethrough adjacent said shoe assembly ends;

said spring means is a coil tension spring having an axially extending coiled body section and transversely extending opposite end sections formed to provide V-shaped end hooks extending generally perpendicularly with respect to the axis of said coiled body section and transversely beyond said coiled body section in the same direction relative to each other when said spring is in the free condition, the spring having terminal ends at the extreme ends of said V-shaped end hooks located transversely beyond said coiled body sections, said terminal ends being shorter than the portions of the V-shaped end hooks joining said coiled body section, the width of said V-shaped ends hooks at said spring terminal ends being greater than the width of said apertures and the apexes thereof being of substantially less width than the width of said apertures, said V-shaped end hooks being flexible to permit insertion thereof through said apertures with said coiled body section being in tension and when said terminal ends pass through and beyond said apertures, said terminal ends springing back toward their free positions to hook on said webs on the opposite sides thereof from said spring coiled body section and retaining said spring means on said shoe assembly

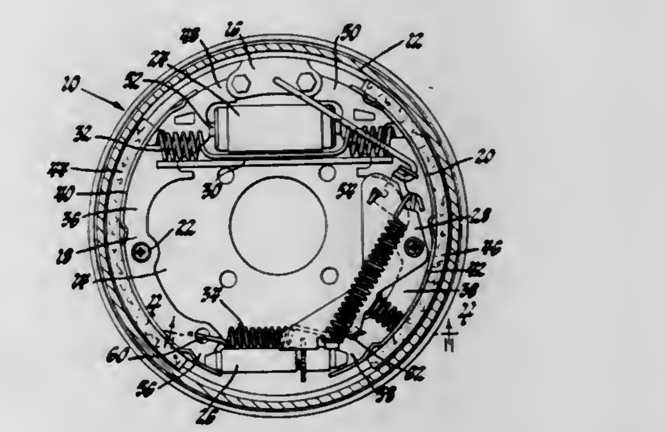

webs with the tension in said coiled body section holding said shoe assembly in operating relation with said adjustable spacing means.

2. The method of installing an adjustable spacing means holding spring having V-shaped end hooks in apertures in a pair of shoe webs of adjacent brake shoe ends connected by an adjustable spacing means comprising the steps of:

a. providing a coiled spring having an axially extending coiled body section and V-shaped end hooks extending substantially perpendicular to said coiled body section;
b. providing a pair of axially parallel notched end shafts capable of relative spreading movement and of concurrent axial movements;
c. engaging the notches of the pair of notched end shafts with the V-shaped end hooks;
d. spreading the notched end shafts apart along the spring axis to tension the spring and align the V-shaped end hooks and shafts with the apertures;
e. moving the shafts axially and concurrently toward said apertures and inserting the end hooks and shafts through the apertures by such movement while yieldably closing the V-shaped end hooks as necessary to pass the end hooks through the apertures until the end hook terminal ends pass through and beyond the apertures;
f. springing the end hook terminal ends back to their free positions so that they hook on the shoe assemblies beyond the apertures;
g. and axially withdrawing the notched end shafts.

4,064,979
SYNCHRONIZING CLUTCH
John H. Crankshaw, Erie, Pa., assignor to Dynetics, Inc., Erie, Pa.
Continuation-in-part of Ser. No. 639,910, Dec. 11, 1975. This application Aug. 17, 1976, Ser. No. 715,047
Int. Cl.² F16D *23/06*
U.S. Cl. 192—53 F **19 Claims**

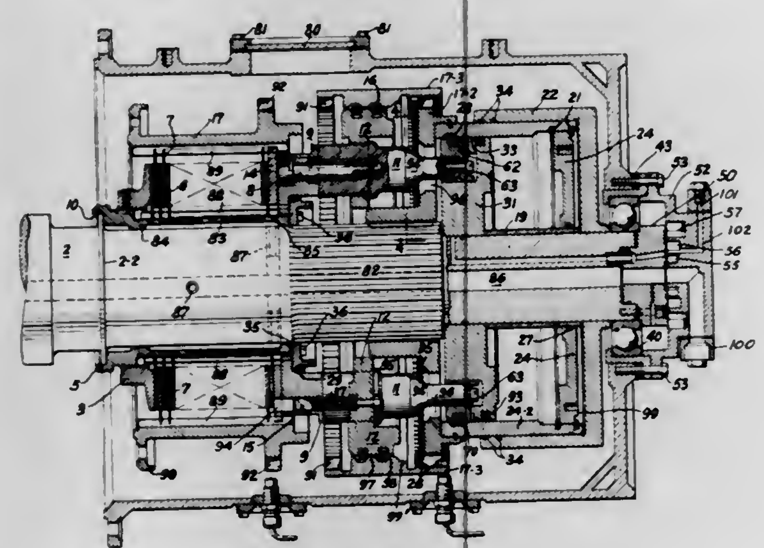

1. A synchronizing clutch comprising,
a first member including a first coupling teeth,
a second member including a second coupling teeth adapted to be moved into engagement with said first coupling teeth,
synchronizing means on said clutch for synchronizing said coupling teeth,
said synchronizing means comprising a cylindrical disc carrier on said first member having an adjusting ring fixed to one end thereof and a retaining ring fixed to the other end defining a space,
first discs supported on said disc carrier in said space,
a pressure ring on said disc carrier adjacent said retaining ring,
second discs connected to said second member and supported between said first discs,
one of said second discs being relatively thick and having kidney-shaped holes therein and disposed in engagement said with said pressure ring,
and drive pins extending through said pressure ring and adapted to engage said holes in said relatively thick disc when said first member and said second member are synchronized with each other,
said pressure ring constituting a positive locating means for said relatively thick disc relative to said drive pins whereby the position of said pins relative to said relatively thick disc is determined.

4,064,980
DUAL SPEED VISCOUS FLUID COUPLING
Thomas H. Tinholt, Marshall, Mich., assignor to Eaton Corporation, Cleveland, Ohio
Filed Oct. 12, 1976, Ser. No. 731,263
Int. Cl.² F16D *35/00, 43/25*
U.S. Cl. 192—58 B **11 Claims**

1. A viscous fluid coupling adapted to be driven by a prime mover, the fluid coupling comprising:
a. an output coupling member rotatable about an axis and defining a low speed fluid chamber and a high speed fluid chamber;
b. a first input coupling member rotatably disposed within said low speed fluid chamber;
c. a second input coupling member rotatably disposed within said high speed fluid chamber;
d. means for transmitting a given motion of the prime mover into a rotational speed X of said first input coupling member and into a rotational speed Y of said second input coupling member, said rotational speed X being greater than said rotational speed Y for any given motion of the prime mover;
e. first means for providing a quantity of viscous fluid in said low speed fluid chamber below a certain speed of the prime mover to transmit torque from said first input coupling member to drive said output coupling member at a rotational speed A which is less than X but greater than Y; and

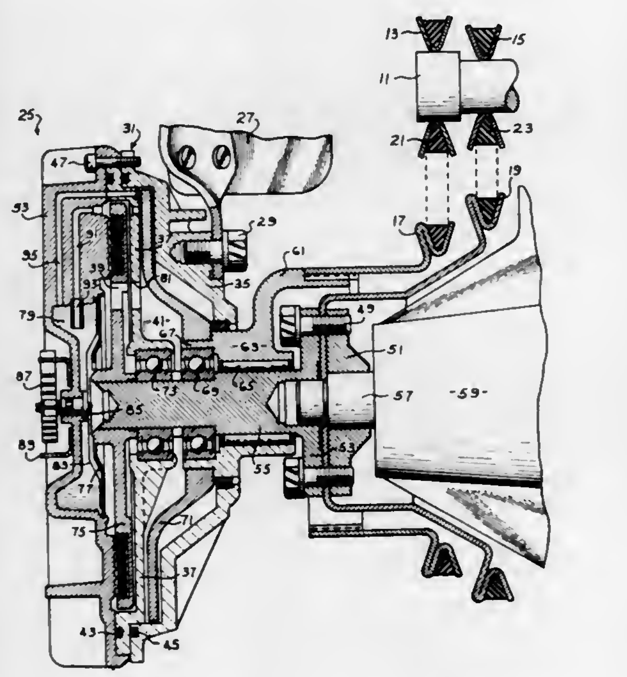

f. second means for providing a quantity of viscous fluid in said high speed fluid chamber above said certain speed of the prime mover to transmit torque from said second input coupling member to drive said output coupling member at a rotational speed B which is less than said rotational speed Y.

4,064,981
LIMIT STOP
William H. House, and Gerald A. Pierik, both of Palos Verdes Peninsula, Calif., assignors to The Garrett Corporation, Los Angeles, Calif.
Filed Feb. 24, 1975, Ser. No. 552,840
Int. Cl.² F16D *71/00*
U.S. Cl. 192—141 **7 Claims**

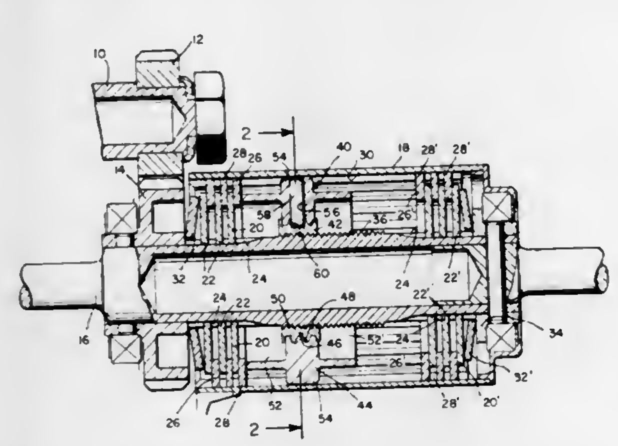

1. Limit stop apparatus for a rotating shaft, said apparatus comprising first jackscrew means including a rotating shaft and a first travelling member, second jackscrew means including said first travelling member, a second travelling member, means for preventing rotation of said second travelling member, stop means for energizing said second travelling member, and means for permitting limited relative motion between said first and second travelling members for stopping rotation of said shaft in one direction and releasing said shaft upon rotation in another direction.

4,064,982
PRINTING RIBBON
Rainer Anton, Nuremberg; Ernst Beyer, Hannover, and Bodo Bielefeld, Hemmingen, all of Germany, assignors to Triumph Werke Nurnberg A.G., Nuremberg, Germany
Filed Sept. 20, 1976, Ser. No. 724,526
Int. Cl.² B41J *31/05*
U.S. Cl. 197—1 R **5 Claims**

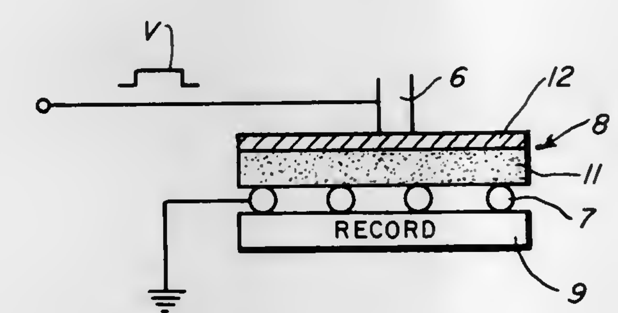

1. A printing ribbon adapted to be placed between a writing electrode and a permeable counterelectrode for transferring marking material thereof to a record adjacent the outer side of said counterelectrode on experiencing multiple dielectric breakdowns in response to voltages applied directly across said writing and counter-electrodes,
said ribbon comprising a discrete continuous layer of dielectric material having a predetermined breakdown voltage of lesser magnitude than the voltage applied across said writing and permeable counterelectrodes,
pigments within said layer,
said pigmented layer constituting said marking material.

4,064,983
JAPANESE CHARACTER WORD PROCESSING SYSTEM
Fumiyuki Inose, San Jose, and Don Winston Geri, Palo Alto, both of Calif., assignors to Hitachi, Ltd., Tokyo, Japan
Filed Aug. 2, 1976, Ser. No. 710,716
Int. Cl.² B41J *1/02, 3/50*
U.S. Cl. 197—1 A **16 Claims**

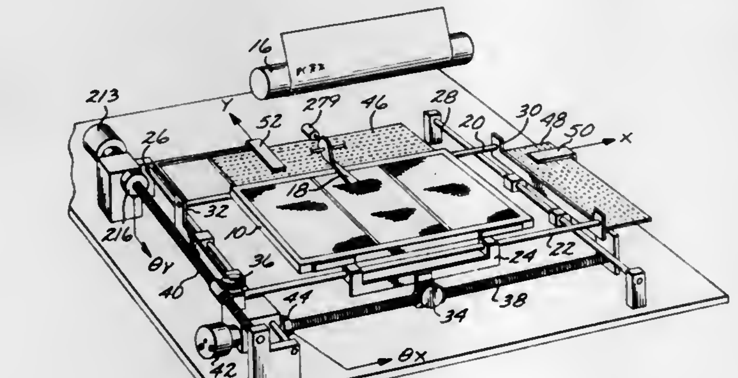

1. An automatic word processing printer system for use with a large number of characters comprising:
a movable font storage means for storing individual font characters;
support means for movably mounting the storage means including an X-directional guideway and a Y-directional guideway, said X-directional guideway movably supporting said font storage means and said Y-directional guideway movably supporting said X-directional guideway and said font storage means;
a hammer assembly for receiving a font from the storage means and impacting it against an appropriate medium;
first motor means for driving the font storage means along the X axis and Y axis guideways relative to the hammer assembly;
control means for driving the first motor means to a predetermined font character;
monitor means for generating a hammer fire signal when the predetermined font character is aligned with the hammer assembly;
second motor means for actuating the hammer assembly when a hammer fire signal is generated;
first encoder means for generating an X direction positional signal of an individual font character; and
second encoder means for generating a Y direction positional signal of said individual font character, said first and second encoder means comprise one encoder plate member and a sensor member mounted adjacent the encoder plate member, the encoder plate member of said first encoder means is mounted to said font storage means for movement therewith, and wherein the sensor member of said first encoder means is mounted to said Y-directional guideway for movement therealong.

4,064,984
FASTENING DEVICE FOR PRINT HEAD
Thurston H. Toeppen, R.D. 3 - Lois Lane, Poughkeepsie, N.Y. 12603
Filed Oct. 12, 1976, Ser. No. 731,718
Int. Cl.² B41J *1/60*
U.S. Cl. 197—52 **6 Claims**

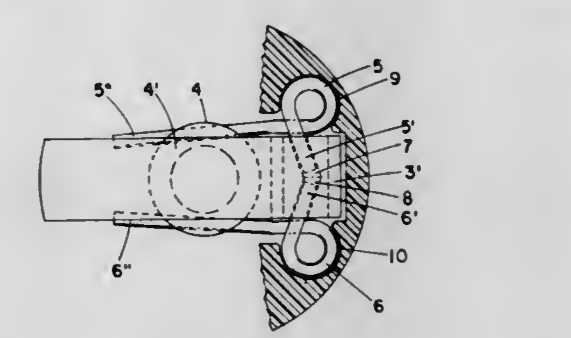

1. A releasable fastening device for fastening a unitary print head to a projecting mounting post provided with first indexing means, an abutment surface and a circumferential groove comprising:
said print head having a plurality of type characters embossed on its periphery and an axial hole formed therein for slidable positioning on said mounting post;
second indexing means formed on said head to mate with said first indexing means on said mounting post for predetermined relative angular positioning of said print head with respect to said mounting post;
an annular shoulder formed on said print head to mate with said abutment surface of said mounting post to limit the axial position of said print head in a first direction;
manually-controllable locking means operatively associated with said print head for cooperating with said circumferential groove in said mounting post to limit the axial position of said print head in a second direction, comprising locking members in the form of one or more bent levers, each of said bent levers being capable of pivotal movement between an unlocked position out of said groove in which each of said bent levers is unstressed, and a locked position in which each of said bent levers is deflected into a stressed position within said groove, and control lever means capable of pivotal movement between corresponding unlocked and locked positions, said control lever means being provided with journal bearing means intersecting its effective pivot axis at an acute angle for moving said locking means between the unlocked and the locked positions.

4,064,985
SELECTABLE DUAL RATCHET FEED FOR A PRINTER PLATEN
William Harold Castle, Winchester; William Ray Crowe, and James Lester Herriford, both of Lexington, all of Ky., assignors to International Business Machines Corporation, Armonk, N.Y.
Filed June 1, 1976, Ser. No. 691,943
Int. Cl.² B41J *19/32*
U.S. Cl. 197—114 R **2 Claims**

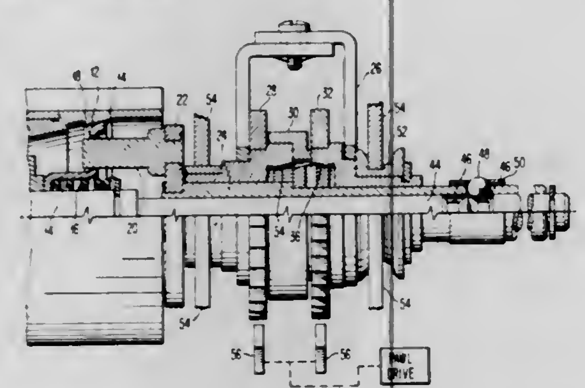

1. A line feed control for a printer platen comprising:
a rotatable and axially moveable sleeve;
a pair of dissimilar pitch ratchet wheels freely rotatably mounted on said sleeve, said sleeve shiftable axially with respect to said ratchet wheels;
means to separate said ratchet wheels by a fixed distance;
engaging means fixedly attached to said sleeve and shiftable therewith for selectively drivingly engaging said sleeve to one of said ratchet wheels.

4,064,986
ESCALATOR HAVING GUIDE WHEELS AND GUIDE TRACK WITH COOPERATIVE NON-FLAT SURFACES
Matthew G. Bertovich, Monroeville Borough, Pa., assignor to Westinghouse Electric Corporation, Pittsburgh, Pa.
Filed Apr. 30, 1976, Ser. No. 681,963
Int. Cl.² B66B *9/12*
U.S. Cl. 198—326 **16 Claims**

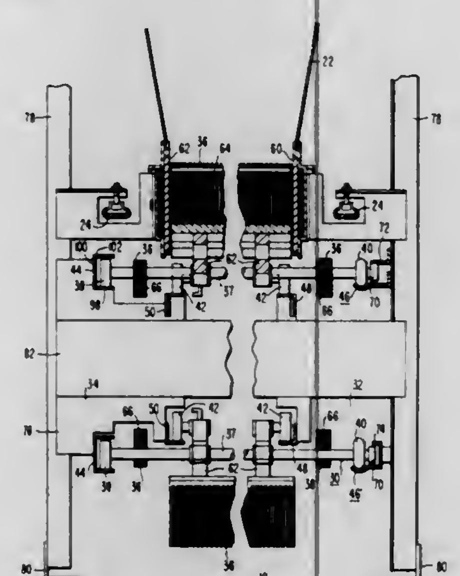

2. An escalator, comprising:
an endless belt having first and second sides,
a plurality of steps attached to said endless belt,
means for driving said endless belt in a loop which includes load bearing and return runs for said steps,
and means for guiding said belt about said loop including a plurality of guide wheels rotatably mounted on said first side of said endless belt on axes perpendicular to the travel direction of the endless belt, and a guide track adjacent to said first side, said guide wheels having a non-flat portion and said guide track having a cooperative non-flat portion, providing a curved interface which guides said guide wheels, with the cross-sectional configurations of the non-flat portions of the guide wheel and guide track defining first and second different curves selected to promote substantially a line contact between each guide wheel and said guide track, wherein only a predetermined central portion of each guide wheel normally comes into contact with the guide track.

4,064,987
CONVEYOR SYSTEM FOR HANDLING NON-RIGID CONTAINERS
Daniel J. Rowan, 26 Strawberry Hill Ave., Stamford, Conn. 06902
Filed Feb. 12, 1976, Ser. No. 657,613
Int. Cl.² B41J *33/44*
U.S. Cl. 198—604 **18 Claims**

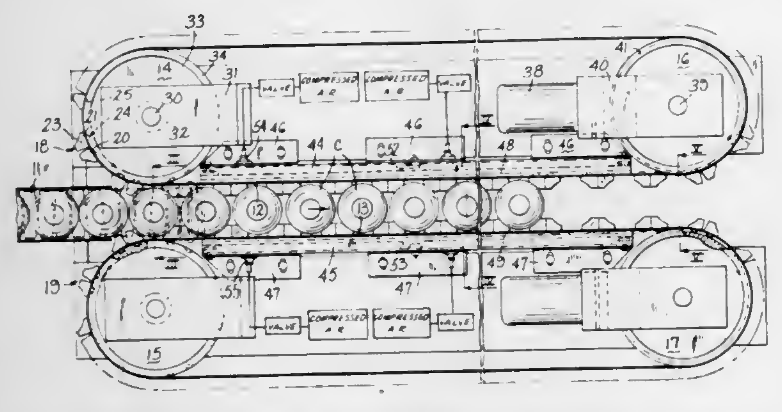

1. A conveyor system for handling containers, comprising a pair of endless belts carried by rollers and arranged to have straight parallel conveying runs, said belts being spaced by a distance commensurate with the diameter of the containers to be conveyed, each belt being provided on its outer surface with a pair of spaced holding jaws for each container, means for synchronously driving said belts, and means including at least one air bag and a source of air under pressure for applying a plurality of adjustable pressures to at least one belt over a plurality of portions of its conveying run to urge said at least one belt toward the other belt in corresponding portions of its conveying run to hold each container without bottom support by applying different pressures to the containers through said holding jaws in each of said plurality of portions of the conveying run of said at least one belt.

4,064,988
DISPLAY CONTAINER
Lowell I. Mazie, 2126 Packard Road; Henry C. Friedman, 1906 Foothill Drive, both of, Huntingdon Valley, Pa. 19006; Nathaniel Getzler, 1213 Davisville Road, Southampton, Pa. 18966, and Jack D. Grollman, 550 Lafayette Road, Merion, Pa. 19066
Filed July 29, 1976, Ser. No. 709,552
Int. Cl.² B65D *5/32*
U.S. Cl. 206—44 R **12 Claims**

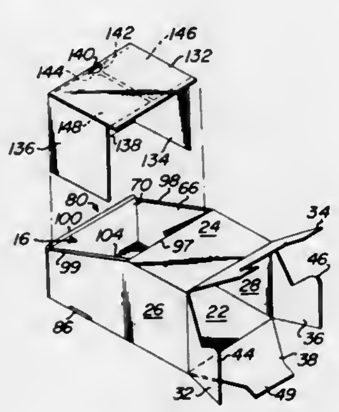

1. A container comprising
a box including integral opposed bottom and top walls, opposed side walls, and flaps forming opposed end walls, said box having an opening formed by said top wall, said side walls and one of the end walls,
a cover being received in said opening, said cover including a lid wall, two legs integral with said lid wall, and an end wall integral with said lid wall, said legs resting on said bottom wall inside said box, said lid wall having a portion extending under said top wall of said box, said legs being high enough and long enough to bias a portion of said lid wall which extends under the top wall of said box against the latter.

4,064,989
SHIPPING CARTON CONSTRUCTION
Robert Charles Olsen, Streamwood, Ill., assignor to Illinois Tool Works Inc., Chicago, Ill.
Filed July 9, 1976, Ser. No. 703,988
Int. Cl.² B65D *65/32*
U.S. Cl. 206—428 **3 Claims**

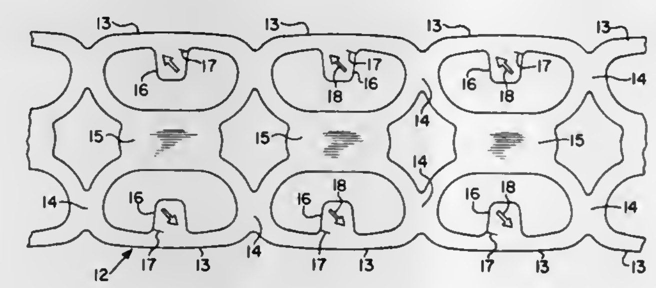

1. A package comprising a shipping carton and a plurality of groups of cylindrical containers carried in said carton in upstanding side-by-side abutting positions, each of said containers having an upper chime extending radially outwardly of the outer side wall surface thereof, the outer diameter of said chime being greater than the maximum diameter of the outer side wall of said containers, a packaging device mounted on each of said groups of containers, each of said packaging devices comprising a sheet of resilient plastics material formed in the shape of a plurality of bands arranged in two adjacent rows, first webs integrally interconnecting the adjacent bands in each row, second webs integrally interconnecting the transversely adjacent bands in said two adjacent rows, each of said bands being elongated in the direction of said rows, a tab integrally formed on each of said bands on the outer band segment of each band substantially at the longitudinal center thereof and extending from the inner periphery of each band, the initial inner peripheral dimension of each of said bands being less than the circumferential dimension of the outer side wall surface of said containers, each of said tabs having a slit extending from one side thereof and substantially into said tab, each of said slits being aligned in said tabs at an acute angle to an imaginary line drawn through said tabs as an extension of the inner periphery of said outer band segment therethrough, and each of said slits positioned in said tabs short of any crossing of said imaginary line into said outer band segments, the distance between the end of each of said slits in said tabs and the other side of each of said tabs opposed to said one side thereof being substantially greater than the transverse width of said outer band segments of each band adjacent to said tabs, each of the bands of said packaging devices being substantially stretched and circumferentially embracing the outer side wall surface of one of said containers with the inner periphery of the band immediately below the upper chime of said container and with the tab of the band extending upwardly to cover said upper chime, and said groups of containers arranged in said carton with the tabs of adjacent packaging devices in an abutting relationship.

4,064,990
PACKAGE FOR WRAPPING PAPER
Walter E. Bennett, Fitchburg, Mass., assignor to Fox Valley Corporation, Appleton, Wis.
Filed June 3, 1976, Ser. No. 692,559
Int. Cl.² B65D *85/62*
U.S. Cl. 206—494 **4 Claims**

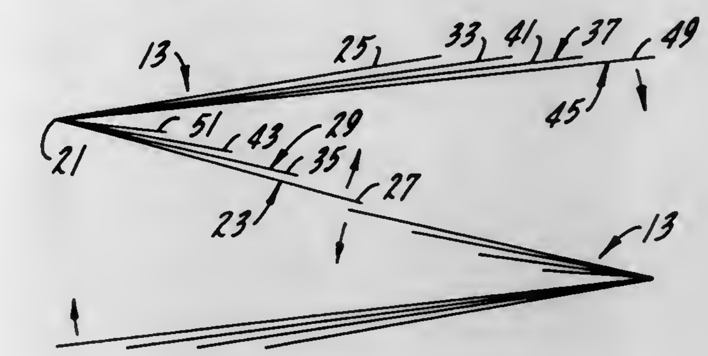

1. A package for folds of decorative wrapping paper, said package including:
two nests of folds,
each nest of folds including a plurality of folds, each fold being formed of at least one sheet of decorative wrapping paper and having a front panel and a rear panel immediately connected to each other at a backbone,
said front panels of each nest being of different lengths,
said folds being nested one inside the other with the backbones located adjacent to one another and the front panels arranged with longer panels located inwardly of the shorter panels so that all of the front panels of a nest are visible in the nested position of the folds,
each front panel being at least as long as its rear panel, and said nests being positioned so that the rear panels of the fold of one nest are adjacent the rear panels of the folds of the other nest and the backbones of the nests are located at opposite ends of the package.

4,064,991
PAINT BRUSH MERCHANDISING DISPLAY
Harold Swanson, New York, N.Y., assignor to Baker Brush Co., Inc., Springdale, Conn.
Filed Feb. 28, 1977, Ser. No. 772,869
Int. Cl.² A47F *7/00*
U.S. Cl. 211—49 R **5 Claims**

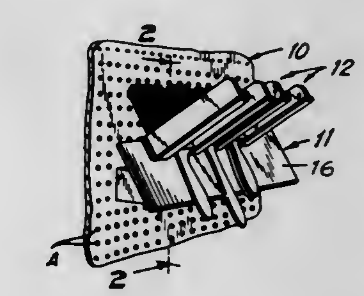

1. A paint brush merchandising display apparatus adaptable to support brushes of a variety of widths comprising, in combination, a generally vertically arrayed display panel, a support tray assembly including attachment means for securing said tray assembly to said panel, said assembly including a horizontally extending planar mounting plate member, said mounting plate member being angularly oriented relative to said panel and including an upper free marginal portion defining an uninterrupted support ledge, and a plurality of brush support members mounted on said ledge and adjustably positionable therealong, said support members including clamp members in the form of inverted U configurations disposed over and frictionally engaging said ledge, a vertically directed divider portion extending from said clamp portion and a transversely directed support web extending from said clamp portion, said web

being fixed to the under surface of said divider portion and extending laterally a distance to both sides of said divider, said web terminating in free edges paralleling said divider portion, said divider portion and said web being inclined away from said panel the opposed webs of adjacent said support members defining spaced parallel tracks whereby a plurality of inverted paint brushes may be mounted between adjacent said support members with the head portions of said brushes seated on said tracks and the handle portions of said brushes extending downwardly through the spaces between said tracks.

4,064,992
SPACESAVER TILTABLE STORAGE UNIT
John Pershing Ralston, 633 Pumosa Drive, Vista, Calif. 92083; Warren Huntsman Turpin, deceased, late of Huntington Beach, Calif., and by Lola Turpin, legal representative, 16411 Rhone Lane, Huntington Beach, Calif. 92647
Filed Sept. 2, 1975, Ser. No. 609,570
Int. Cl.² A47B *73/00*
U.S. Cl. 211—75 **1 Claim**

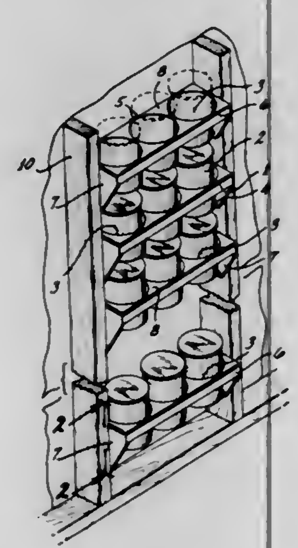

1. In a storage unit comprising frame members pivotally secured to fixed adjacent spaced-apart generally vertical structural support members for limited pivoted travel between a normal generally vertical storage position and a forwardly inclined access position by pivot and motion restraint means comprising a pivot and a coacting arcuate slot and stop pin received therein the improvement comprising:
at least one frame member of a semi-resilient material and sized to generally correspond to the distance between the adjacent spaced-apart support members and having a generally horizontal upper surface including at least an opening adapted to receive a container and including a pair of integral downwardly and outwardly diverging end plate members; and
means for enabling assembly of the frame member to the adjacent fixed spaced-apart support members comprising a generally straight slot in each of said end plate members generally normal to and having one end in communication with the arcuate slot and extending linearly toward the pivot for reception of the stop pin for positioning the stop pin in the arcuate slot, whereby said frame member is operatively secured to the fixed spaced-apart support members.

4,064,993
MULTI-PURPOSE STAND
Edwin S. Getner, 2549 Alveston Drive, Bloomfield Hills, Mich. 48013
Filed Oct. 18, 1976, Ser. No. 733,393
Int. Cl.² A47G *29/00*
U.S. Cl. 211—85 **13 Claims**

1. A knockdown stand assembly comprising: a plurality of leg members, an intermediate retaining member including openings for receiving said leg members for holding said leg members together at an intermediate point and an upper retaining member including openings for receiving said leg members for holding the upper ends of said leg members together; said leg members including an upper portion having cross-sectional dimensions capable of pasage through said openings in said intermediate retaining member, locating means for locating said intermediate retaining member and said upper retaining

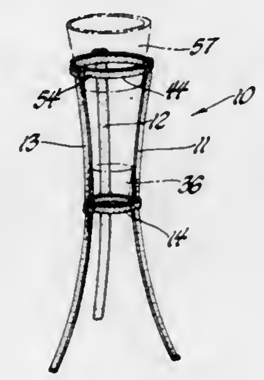

member relative to said leg members, said locating means for said intermediate retaining member comprising an enlarged section having a cross-sectional dimension greater than that of said opening in said intermediate retaining member to prevent further passage of said leg member and releasable snap lock means for locking said intermediate and upper retaining member in place.

4,064,994
DEFLECTION-RESISTANT RACK
Vladimir J. Ondrasik, II, 17044 Westbury Drive, Granada Hills, Calif. 91344
Filed June 23, 1976, Ser. No. 698,896
Int. Cl.² A47F *5/00*
U.S. Cl. 211—153 **8 Claims**

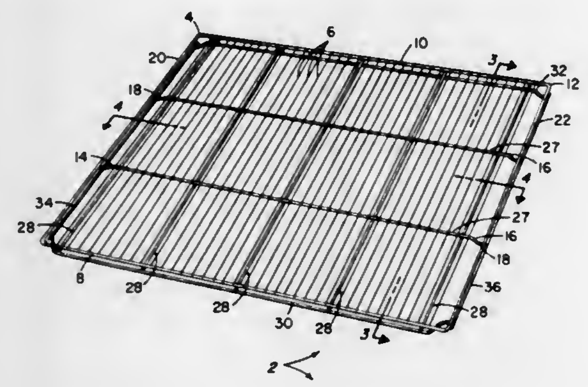

1. A deflection-resistant rack comprising:
a rack member having an endless rectangular structural perimeter member with integral front, rear, left and right members, and a plurality of evenly spaced parallel support members disposed above and rigidly attached to the front and rear members of the structural member; and
a deflection-resistant frame having a plurality of spaced cross-members and a plurality of spaced longitudinal members whereby said spaced longitudinal members are rigidly attached to the bottom of, and in perpendicular relation to, the cross members, the deflection-resistant frame is attached to the bottom of the rack member, the ends of the longitudinal members being attached to the bottom of the front and rear members of the structural member and the ends of the cross-members being attached to the bottom of the left and right members of the structural member such that the longitudinal members of the deflection-resistant frame are in parallel relation to the support members, the ends of the cross-members are bent downwardly and outwardly such that the top edges of the body of the cross-member are in substantially the same plane as the bottom edges of the support member, the cross members being rigidly attached to the support member whereby to form a space double-bar deflection-resistant support structure.

4,064,995
DISPLAY RACK
Rafael T. Bustos, 1629 Folkstone Road, N.D., Atlanta, Ga. 30329
Filed Feb. 17, 1976, Ser. No. 658,351
Int. Cl.² A47F *5/10*
U.S. Cl. 211—187 **4 Claims**

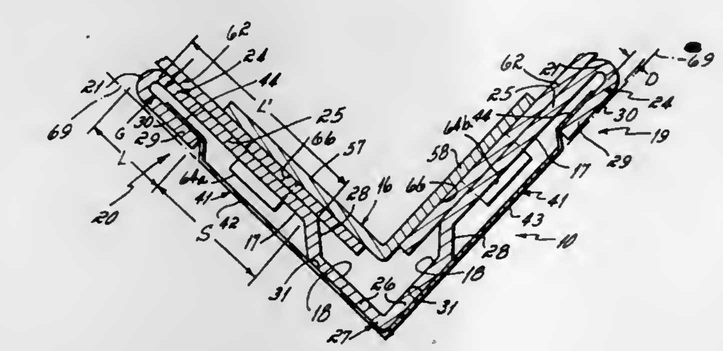

1. A display rack comprising
at least one shelf,
a corner post of a generally angular configuration, said corner post including a corner rib positioned at the angular corner of said corner post, a decor strip connector structure laterally spaced from said corner rib and extending along each longitudinal edge of said corner post, a side wall section connected between said corner rib and each decor strip connector structure with at least one of said side wall sections being set back inwardly from a planar external face that includes an exterior surface of said corner rib, and a plurality of shelf locater holes provided along the length of said post in said set-back wall section for establishing a plurality of potential shelf support levels along the length of said post for said shelf,
at least one shelf support clip mounted on the internal face of said corner post, said clip including at least one finger adapted to extend through one of said shelf locater holes to establish said clip at the desired shelf support level, and each shelf being located and supported by a clip relative to the ends of said post, and
a decor strip mounted in said decor strip connector structure on the external surface of said corner post, said decor strip being structured to permit removal of said decor strip from operable combination with said corner post, said corner rib and each of said decor strip connector structures cooperating with said decor strip to define a substantially planar external face for each external face of said post, and said decor strip being structured to overlie said clip's finger for preventing inadvertent contact therewith and for hiding unused shelf locater holes from sight when the corner post's external faces are viewed by an observer.

4,064,996
RACK SYSTEM
Robert L. Shillum, 12 Tupper Court, Kitchener, Ontario, Canada, assignor to Robert L. Shillum, Kitchener, Ontario, Canada
Filed Dec. 17, 1975, Ser. No. 641,414
Int. Cl.² A47B *43/00*
U.S. Cl. 211—191 **4 Claims**

1. A rack system comprising:
a plurality of upright support frames, each support frame including at least one post having first and second side ribs extending longitudinally, and a centre portion extending between the side ribs and defining longitudinally spaced slots, the side ribs being symmetrically disposed to either side of the centre portion and each side rib including an outer portion lying generally perpendicularly to a plane containing the centre portion, a front portion lying generally parallel to the centre portion, and a side portion extending from the front portion to the centre portion at a small angle of divergence with the outer portion; and
shelf support elements adapted to be releasably attached to the support frames for extending horizontally in pairs between adjacent support frames to support a shelf in a horizontal position, each shelf support element comprising: a stringer and a pair of opposite-handed end connectors attached one to each of the ends of the stringer for engagement with the posts of two adjacent support frames, each end connector having a channel shape adapted to fit over a side rib of one of the posts, the channel shape being defined by first and second side portions diverging from one another be said small angle for respective surface-to-surface contact with said outer portion and said side portion, and a front portion extending between these side portions and proportioned such that with said surface-to-surface contact there is a clearance between this front portion and said front portion of said rib, the end

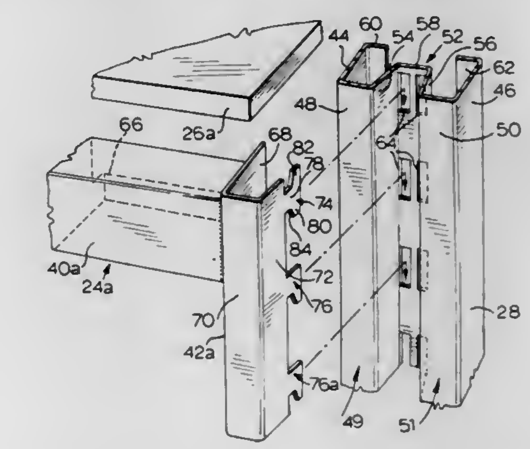

connector being attached to the stringer by the first portion and further comprising first and second coupling elements extending rearwardly from the second portion for engagement in said slots, each of the coupling elements having a cantilever portion and a downward projection dependent from an end of the cantilever portion, the downward projection having a forward face inclined downwardly and rearwardly for engagement with a rearward side of the centre portion of one of the posts upon engaging the coupling elements in such a post, whereby a downward force on the end connector will result in a first wedging action as the rearward faces of the coupling elements ride on the centre portion thereby drawing the end connector into firm and snug engagement with the corresponding side rib of the post and a complementary second wedging action as said face-to-face engagement causes frictional locking between the post and the end connector, this second wedging action being allowed by said clearance between the respective front portion of the ribs and end connector.

4,064,997
CRANE SWING SAFETY CONTROL
Eugene Richard Holland, 121 S. Reese Place, Burbank, Calif. 91506, and Melvin Glynn Schlieman, Murphys, Calif. 95247
Filed Mar. 29, 1976, Ser. No. 671,567
Int. Cl.² B66C *13/48*
U.S. Cl. 212—39 B **10 Claims**

1. Means to warn a crane operator of his attaining the limit of a permissible angular rotation of the rotatable turrent of the crane on the platform on which the turret of the crane is caried; said means comprising:
a. electrically operable alarm device;
b. a source of electric current;
c. an electrically operated relay, said relay being connectable to said source of electric current and having a first contact in circuit with said source of electric current and

said warning means and said contact being normally closed to actuate the warning means; said relay having a second contact in circuit with said source of electric current and with the energizing coil of said relay and normally maintained in open circuit breaking position; said relay, when actuated, opening the first contact and closing the second contact; first switching means disposed peripherally on the crane turret to rotate therewith, said first switching means being in series with said second contact and being switched to and maintained in its "on" position, said first switching means when switched to its "off" position serving to open the relay circuit and thereby close the said first contact to operate said warning device;

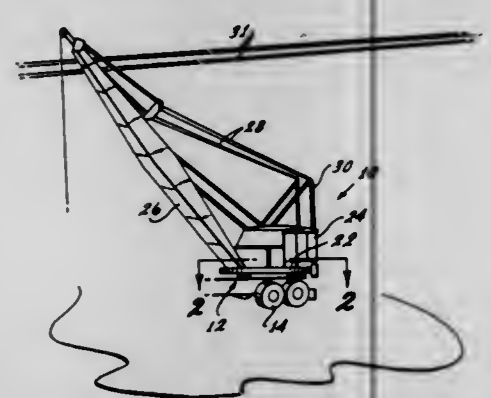

d. second switching means serving momentarily to connect said source of current to said relay to actuate and the latter; and thereby open the first contact and close the second contact;

e. projecting means to operate said first switching means, said projecting means being disposable fixedly adjacent the periphery of said crane turrent and at least one predetermined point on, and within the arc of swing of said first switching means on said crane turret, whereby, when said turret is rotated to cause said first switching means to pass and strike said projecting means, said first switching means will be switched from its "on" position to its "off" position, thereby breaking the relay circuit with said power source to de-energize said relay, and cause said second contact to close and operate said warning device.

4,064,998

RAILWAY COUPLER AND DRAFT RIGGING

Walter C. Dilg, Elma, and Wilbert G. Glauser, Alden, both of N.Y., assignors to Dresser Industries, Inc., Dallas, Tex.

Filed Oct. 31, 1975, Ser. No. 627,638

Int. Cl.² B61G *9/00*

U.S. Cl. 213—69 **8 Claims**

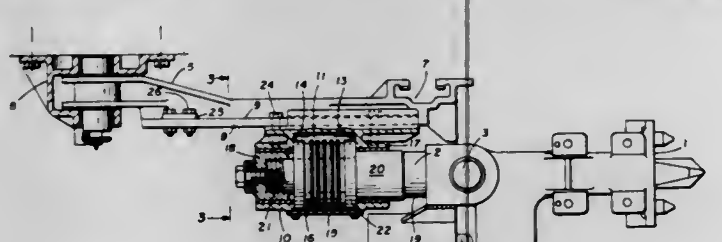

1. In a draft rigging for a railway car, a longitudinally extending drawbar having a lower beam member with an upper bearing surface, a housing having a pocket for containing a cushioning means disposed below the beam member, the housing having means thereabove for slidably engaging the bearing surface of the beam member, the housing containing cushioning means within the pocket and a yoke passing through the cushioning means and extending forwardly from the housing, the yoke being pivotally connected to a coupler.

4,064,999

ADJUSTABLE BUILDING PANEL SCAFFOLD

Simon Young, P.O. Box No. 41, Mamou, La. 70554

Filed July 7, 1976, Ser. No. 700,681

Int. Cl.² E04F *21/18*

U.S. Cl. 214—1 SW **1 Claim**

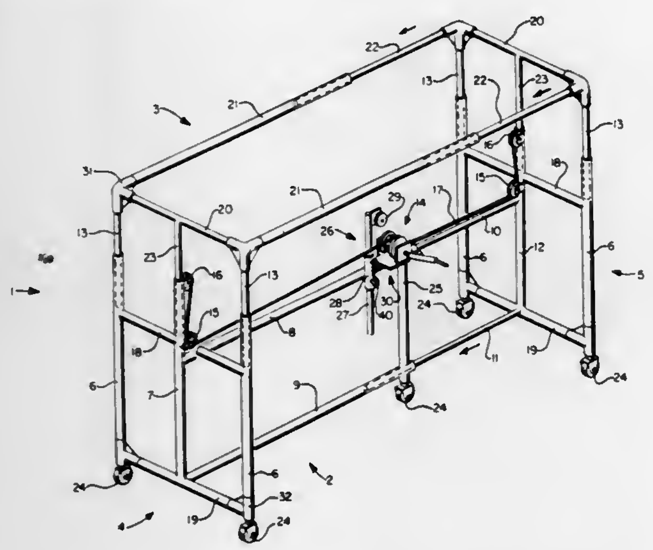

1. A panel lifting apparatus for raising and hold ceiling panels in place during attachment thereof to ceiling joists including:

a. a base unit having first and second generally rectangular end units each consisting of three hollow vertical leg members connected at their lower ends and adjacent their upper ends by an upper and lower transverse horizontal brace, said first end unit connected to said second end unit longitudinally by an upper and lower central hollow horizontal brace member, said upper central hollow horizontal brace member being connected adjacent the upper end of the central vertical leg on said first end unit and said lower central horizontal brace member being connected at one end at the bottom of the central vertical leg of said first end unit and having inserted in the opposite ends of said upper and lower central hollow horizontal brace members, one end of each of an upper and lower solid central horizontal brace member, respectively, and having the opposite end of each of said upper and lower solid central horizontal brace members being connected, respectively, adjacent the upper end of the central vertical leg of said second end unit and to the bottom of said central vertical leg of said second end unit so that said base unit is slidably adjustable longitudinally;

b. a carriage unit of a generally rectangular frame registerable over said first and second end units in a horizontal plane normal to the vertical above said first and second end units and said carriage unit being slidably adjustable longitudinally in the same manner as the basement and being slidably connected to said base unit by downwardly extending solid vertical legs, each of which is slidably engaged in a vertical leg of said base unit; and

c. actuating means located on said upper central hollow horizontal brace member including a cable attached to the lower end of each central downwardly extending vertical leg from said carriage unit and attached over a suitable arrangement of pulleys to winch means whereby on operation of the actuating means, said carriage unit is raised or lowered vertically as desired.

4,065,000

PHARMACEUTICAL TABLET AND CAPSULE COUNTER

Gary Murton, P.O. Box 1391, Sonora, Calif. 95370

Filed June 3, 1976, Ser. No. 692,529

Int. Cl.² G07D *9/06*

U.S. Cl. 214—1 C **1 Claim**

1. Apparatus comprising:

a base comprising a rectangular box with bottom and sides but without a top, and having openings in the sides at two opposite corners;

a slotted plate having a single row of slots, said slotted plate being rectangular and being disposed parallel to and at a selected distance from the bottom of the base, said distance being less than the height of the sides of the rectangular box to thereby form a region within the base and beneath the slotted plate;

a removable rectangular counting plate slidably disposed on the slotted plate for movement parallel to said sides, said counting plate having an array of openings of semicircular shape arranged in rows and columns wherein the rows are parallel to the slots in the slotted plate;

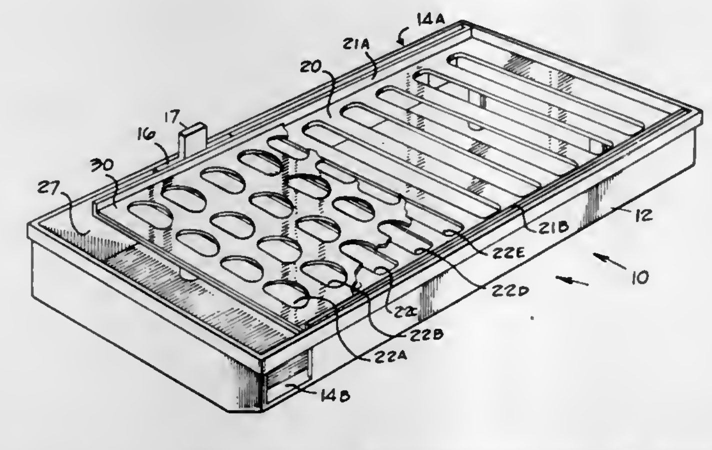

a slidably movable partition disposed between the slotted plate and the bottom and sides of the base, said partition being less thick than the distance separating adjacent rows of openings in the counting plate and said partition being disposed perpendicular to the bottom and sides of the base to thereby divide the region within the base and beneath the slotted plate into two separate portions; and

wherein the number of slots in the slotted plate is equal to the number of rows of openings in the counting plate, wherein the rows of openings in the counting plate are spaced a distance apart equal to the spacing of the slots and the width of the slots is at least as great as the corresponding dimension of a row of the openings in the counting plate.

4,065,001

MANIPULATOR

Makoto Ohnaka, Yokohama, Japan, assignor to Shiroyama Kogyo Co., Ltd., Japan

Filed June 15, 1976, Ser. No. 696,250

Int. Cl.² B65G *47/91*

U.S. Cl. 214—1 BV **8 Claims**

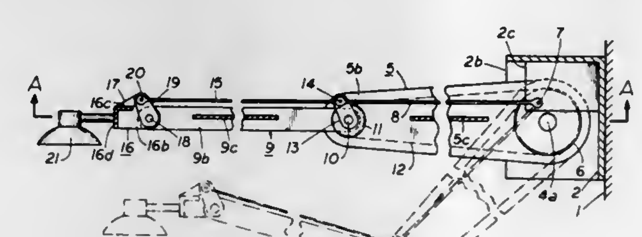

8. A manipulator comprising a first arm assembly having a base end portion and a free end portion attachment means on which said base end portion is pivotally mounted by first pivotal means for pivotal movement about a first pivotal axis, first power means operatively connected to said first arm assembly to effect rotation of the latter about said first pivotal axis, a second arm assembly having a base end portion and a free end portion, second pivotal means pivotally mounting said base end portion of said second arm assembly to said free end portion of said first arm assembly for pivotal movement about a second pivotal axis, second power means, coupling means coupling said second power means to said second arm assembly to effect rotation of the latter about said second pivotal axis, holding means on said free end portion of said second arm assembly for holding an article which is to be moved by the manipulator, third pivotal means for pivotally mounting said holding means to the free end of said second arm assembly for pivotal movement about a third axis, a first coupling lever disposed parallel to the longitudinal axis of said first arm assembly and having a length equal to the length of said first arm assembly, link means pivotally mounting said first coupling lever to said attachment means and to said second pivotal means to thereby define a first parallelogram, a second coupling lever disposed parallel to the axis of said second arm assembly and having a length equal to the length of said second arm assembly, and second link means pivotally mounting said second coupling lever to said second pivotal means and to said third pivotal means to thereby define a second parallelogram, whereby said second pivotal means has an axis which is common in both said first and second parallelogram and said holding means is maintained in a generally horizontal disposition independently of the relative pivotal positions of said first and second arm assemblies.

4,065,002

POCKET DOOR SHIP LOADER

James Thomas Cunningham, Caldwell; Frederick Orren Snow, III, Wayne; Joseph Richard April, Wallington, and A. Tobey Yu, Kinnelon, all of N.J., assignors to Orba Corporation, Fairfield, N.J.

Filed Apr. 22, 1976, Ser. No. 679,330

Int. Cl.² B63B *27/10*

U.S. Cl. 214—14 **4 Claims**

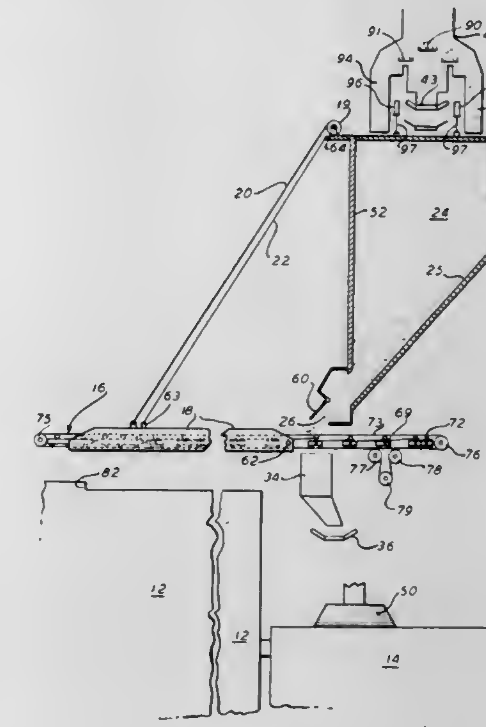

1. A pocket dock ship loader of the type wherein bulk materials are transported from an off dock storage to a dock storage site in preparation for loading of a vessel and wherein the bulk materials may be loaded on such vessel at a speed such as to minimize the demurrage time of such vessel, comprising:

a. at least one pocket constructed on a dock, said pocket to accommodate dock side storage of bulk material;

b. first conveyor means for transporting bulk material from an off-dock source to said pocket;

c. an apron, said apron extending perpendicular to the face of said dock and being positionable in a generally horizontal operating position and a generally vertical stowed position;

d. a first track section mounted on said dock under said at least one pocket;

e. a second track section mounted on said apron, said second track section being aligned and coplanar with said first

track section when said apron is in said generally horizontal operating position;

f. second conveyor means for transporting said bulk material from said pocket to a drop point above the cargo hatch of a bulk material carrying vessel, said second conveyor means being extensible from a stowed position, in which it is entirely supported by said first track section, to an operating position in which it is supported by both said first and said second track sections; and

g. means, mounted on said at least one pocket above said second conveyor means, for regulating the flow of bulk material from said at least one pocket to said second conveyor means.

4,065,003

RAISABLE AND LOWERABLE MAT-LOADING AND PRESS-TRAY UNLOADING DEVICE FOR A MULTI-LEVER PRESS

Werner Hostettler, Zurich, Switzerland, assignor to Peter Fahrni, Zurich, Switzerland

Filed Apr. 19, 1976, Ser. No. 678,229

Claims priority, application Switzerland, Apr. 28, 1975, 5447/75

Int. Cl.[2] B65G *1/04*

U.S. Cl. 214—16.6 **7 Claims**

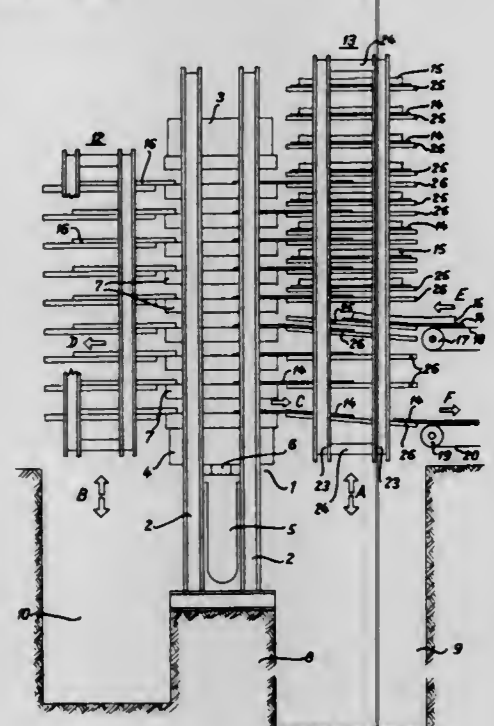

1. A mat loading and press-tray unloading apparatus for a multi-level press having a plurality of plates for the manufacture of boards said apparatus comprising a raisable and lowerable structure; a set of loading and unloading levels connected to said raisable and lowerable structure, each set corresponding in number to the number of press levels whereby the press is loaded with mats on trays from the loading levels and whereby the unloading levels receive the empty trays; means for raising and lowering said structure, and means for feeding said levels; said loading and unloading levels being arranged one above another such that at one end of said structure at least two loading levels are directly adjacent to each other, at the other end of said structure at least two unloading levels are directly adjacent to each other, and at an intermediate portion of said structure at least one unloading level is disposed between two loading levels.

4,065,004

METHOD AND APPARATUS FOR RESEALING THE LARGE BELL ROD IN A DOUBLE BELL CHARGING SYSTEM FOR A BLAST FURNACE

Ronald M. Chadwick, Collinville, and David A. Shearlock, Granite City, both of Ill., assignors to National Steel Corporation, Pittsburgh, Pa.

Filed May 27, 1976, Ser. No. 690,725

Int. Cl.[2] F27B *11/12*

U.S. Cl. 214—36 **31 Claims**

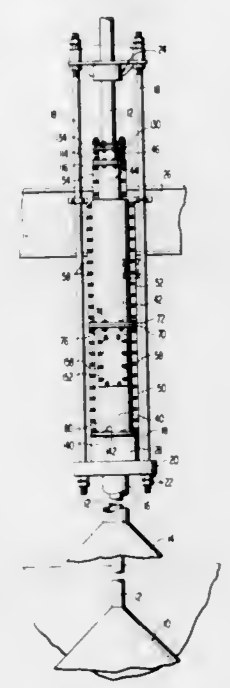

1. In a blast furnace having a double bell system for charging the furnace through the top thereof, the system including a large bell and a first bell rod for raising and lowering the large bell, and a small bell and a second rod received about the first rod for raising and lowering the small bell, and a first seal between the large and small bell rods at a certain location along the large bell rod; a method of establishing a second seal in situ along the large bell rod at a location spaced from the first seal when the first seal becomes worn, the steps comprising leaving the first seal and the first bell rod in tact, forming an enclosure about the large bell rod at a location above the first seal and with the enclosure having upper and lower open ends, sealing the lower end of the enclosure about the first seal so that any leakage of fluid or material from the interior of the small bell rod along the large bell rod passing through the first seal will be trapped in the enclosure, and sealing the space between the upper end of the enclosure and the large bell rod to seal the interior of the enclosure.

7. In a blast furnace having a double bell system for charging the furnace through the top of the furnace including a large bell rod, a small bell rod received about the large bell rod, and a first seal assembly including at least one seal ring positioned about the large bell rod to seal the interior of the small bell rod; an assembly for establishing a second seal above the first seal around the large bell rod when the first seal ring becomes worn, the assembly including a hollow enclosure positioned about the large bell rod and having a lower end sealed about the first seal assembly, and a second seal between the upper end of the enclosure and the large bell rod for sealing the interior of the enclosure.

4,065,005

DEVICE FOR LOADING RAILROAD CARS FROM A GRAIN STORAGE COMPLEX

Howard C. Mahle, Minnetonka, Minn., and Harris B. Thomas, Ames, Iowa, assignors to Todd & Sargent, Inc., Ames, Iowa and Nott Company, Minneapolis, Minn., part interest to each

Filed Nov. 8, 1976, Ser. No. 739,572

Int. Cl.[2] B65G *67/06*

U.S. Cl. 214—41 R **2 Claims**

1. In combination with a grain storage facility having a

railroad siding adapted to receive grain carrying hopper cars, the invention comprising,

an overhead track structure positioned over said railroad siding and above any hopper cars thereon,

crane means mounted on said overhead track structure, said crane means comprising a first crane member longitudinally movably mounted on said overhead track structure and a second crane member laterally movably mounted on said first crane member,

a telescopic delivery tube having its lower end universally connected to said second crane member and having its upper end universally connected to said grain storage facility and being adapted to receive grain from said grain storage facility,

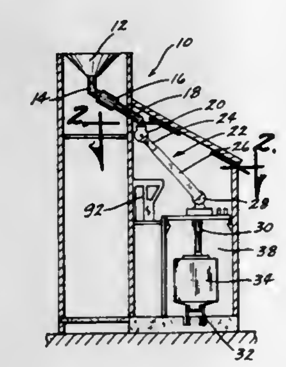

power means to move said telescopic delivery tube and said crane members longitudinally and laterally with respect to said track structure,

a normally vertically disposed telescopic tube extending downwardly from said crane means and being in communication with said telescopic delivery tube to deliver grain to hopper cars on said railroad siding, and

said vertically disposed telescopic tube being operatively pivotally connected to said telescopic delivery tube and means for moving said telescopic tube from a vertically disposed grain delivery position to an inclined stored position.

4,065,006

CONTAINER SIDE-TRANSFER SYSTEM

Leonard D. Barry, 19300 Pennington Drive, Detroit, Mich. 48221

Continuation of Ser. No. 428,873, Dec. 27, 1973, abandoned. This application June 27, 1975, Ser. No. 591,101

Int. Cl.[2] B61K *1/00*

U.S. Cl. 214—42 R **22 Claims**

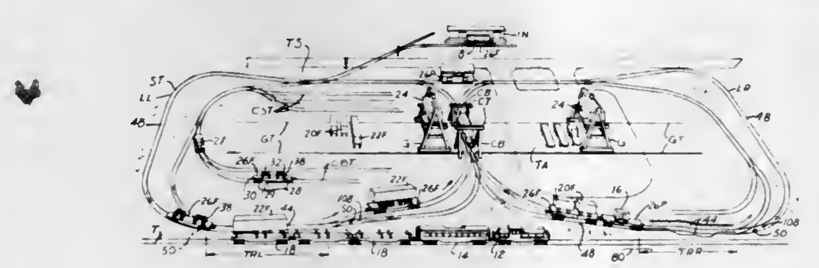

1. A first and a second track having at least one parallel running transfer run, at least a first and a second vehicle on respectively said first and second track, side transfer means on said first vehicle for extending over to said second vehicle to transfer a load, cam rider means on said first vehicle for operating said transfer means, a cam track extending aways along said first track for each said transfer run with lateral displacement and return for said cam rider means to guide on to displace laterally to extend said transfer means out over to said second vehicle and back to transfer a load to or from said first vehicle, and engaging-disengaging means for engaging a load on said second vehicle with said transfer device and for releasing a load from said transfer means to said second vehicle, and means for keeping said vehicles aligned while moving along said tracks for the transfer run.

4,065,007

ARTICLE DELIVERY AND UNLOADING DEVICE

Yutaka Kurahashi, c/o Tokyo First Factory, Ishikawajima Harima Jukogyo Kabushiki Kaisha, 1-1 2-chome, Tsukuda, Chuo, Tokyo, Japan

Filed Apr. 21, 1976, Ser. No. 678,817

Int. Cl.[2] B65G *67/24*

U.S. Cl. 214—62 A **16 Claims**

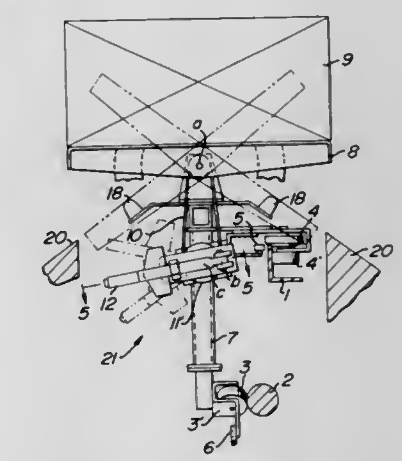

1. Apparatus comprising:

a single track conveyor line;

at least one unloading station positioned adjacent to said conveyor line;

a stop means positioned along said conveyor line adjacent said unloading station;

at least one vehicle supported by said conveyor line for movement along said conveyor line;

said vehicle including a frame means;

at least one carrier wheel supported by said frame means and adapted for rolling contact with said single track;

a drive wheel supported by said frame means below the elevation of said carrier wheel and adapted to be driven by a drive means carried by said conveyor for driving said frame means along said track;

said vehicle including an article supporting platform and means for rotatably mounting said supporting platform to said frame means;

means for maintaining said platform in a substantially horizontal position;

an actuator means mounted on said vehicle; and

said actuator means cooperating with said stop means when said vehicle is adjacent said unloading station for deactuating said maintaining means and for rotating said platform into a inclined position whereby an article is allowed to slide off of said platform.

4,065,008

REFUSE COLLECTION VEHICLES

Houston Ratledge, Maryville, Tenn., assignor to Carrier Corporation, Syracuse, N.Y.

Filed Aug. 5, 1976, Ser. No. 711,834

Int. Cl.[2] B65F *3/00*

U.S. Cl. 214—83.3 **13 Claims**

1. A refuse collection vehicle comprising:

a rear hopper having an inlet into which refuse is dumped by an operator,

a packer plate for compacting refuse in said hopper,

power means connected to said packer plate for displacing said packer plate through a loading cycle wherein refuse in said hopper is compacted within the hopper, and

cycle interrupt means automatically responsive to the arrival of said packer plate at a predetermined location in said cycle relative to said hopper prior to full compaction of the refuse for deactivating said power means, and

manually actuable means for reactivating said power means to continue said loading cycle subsequent to such deactivation.

13. In a method of loading refuse into a rear end loader vehicle in which an operator dumps refuse over a rear transverse edge of said vehicle and into a hopper portion of the vehicle and subsequently manually activates a power system on the vehicle which displaces a packer plate through a loading cycle within the hopper in which the packer plate travels downwardly past said transverse edge, compacts the refuse in

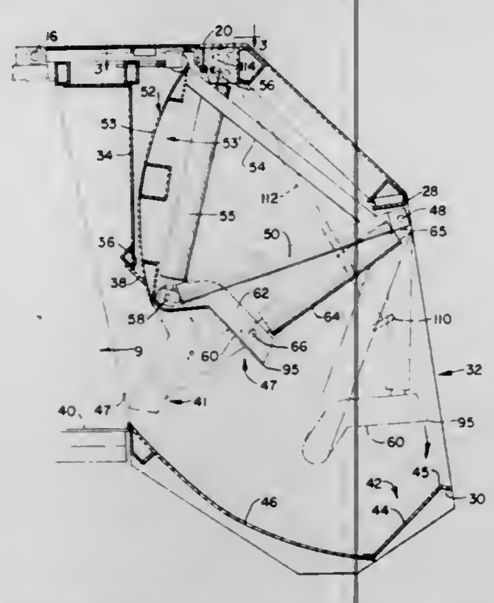

the hopper, and transfers the refuse from the hopper to a storage portion of the vehicle, the improvement comprising the steps of:

causing said power system to be automatically deactivated solely in response to the arrival of said packer plate at a predetermined position above said transverse edge and independently of manual activation of said power system, and

maintaining said power system deactivated in the absence of manual reactivation by an operator.

4,065,009
MATERIAL HANDLING APPARATUS
John L. Old, Kenilworth, England, assignor to Massey-Ferguson Services N.V., Curacao, Netherlands
Filed Sept. 4, 1975, Ser. No. 610,363
Claims priority, application United Kingdom, Sept. 19, 1974, 40828/74
Int. Cl.² E02F *3/72*
U.S. Cl. 214—131 A **7 Claims**

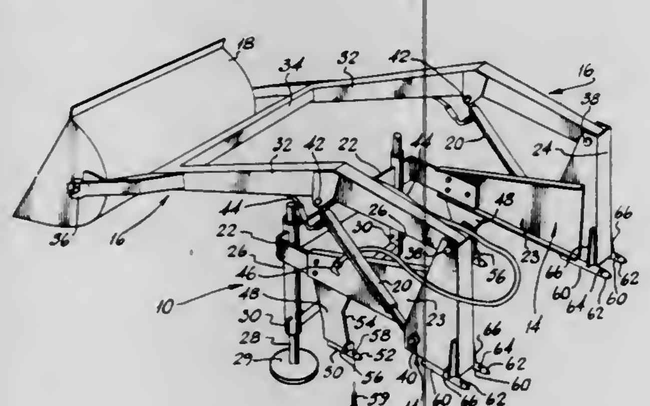

1. Material handling apparatus for attachment to a tractor, the apparatus comprising:

a U-shaped support structure to fit round the front end of a tractor;

a pair of posts forming part of said support structure and rigidly secured thereto so as to extend upwardly when the apparatus is attached to a tractor;

a boom, said boom being pivotally mounted at one end on each of said posts, the other end of the boom being adapted to have mounted thereon a material handling implement;

a thrust device connected to the boom, said thrust device being operable to effect pivotal movement of the boom relative to the posts;

attachment means at each side of said support structure whereby the support structure may be attached to and detached from a tractor; and

a stand connected to the support structure and operable to support the material handling apparatus when said apparatus is detached from a tractor;

characterized in that each of said attachment means comprises two laterally spaced pairs of attachment elements, each pair of attachment elements comprising a rod member secured to said support structure in the region of the lower end of its respective post and structure defining a socket fastenable to a tractor, the rod members extending longitudinally of a tractor when mounted thereon; and that

said rod members and said structures defining said sockets are mounted in positions such that said stand supports the material handling apparatus in a position so that said rod members are approximately axially aligned with said sockets whereby the only operations required for attachment of said apparatus to the tractor is driving the tractor toward the apparatus and inserting retaining pins; and that

a guide structure is mounted adjacent at least one of said attachment means, the guide structure being engageable with at least one of its respective rod members upon forward movement of a tractor on which the apparatus is to be mounted, the guide structure being effective to guide said rod member into its respective socket; and that at least two of said structures defining a socket are formed integrally with a U-shaped bracket one at each end thereof, the U-shaped bracket being proportioned so as to pass underneath a tractor and being adapted to be fastened thereto.

4,065,010
SWING VALVE CIRCUIT
David L. Worback, Highland, Mich., assignor to Massey-Ferguson Inc., Detroit, Mich.
Continuation-in-part of Ser. No. 559,271, March 17, 1975, Pat. No. 4,007,845. This application Feb. 2, 1976, Ser. No. 654,675
The portion of the term of this patent subsequent to Feb. 15, 1994, has been disclaimed.
Int. Cl.² E02F *3/32*
U.S. Cl. 214—138 D **24 Claims**

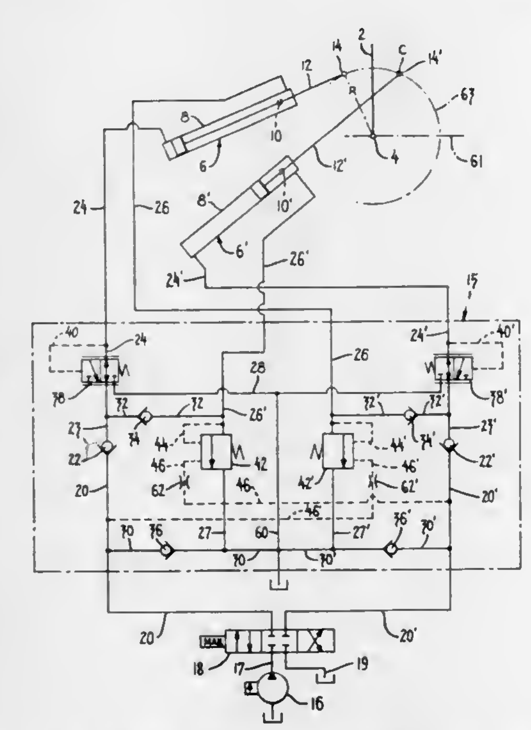

1. Control for a swing member mounted for side-to-side swinging movement having power means connected with the swing member for causing the swing member to swing in opposite directions in response to flow of fluid in opposite directions to and from the power means including at least one pair of lines for conducting fluid to and from the power means; the swing member being responsive to flow of fluid to said power means in one of said lines to swing in one direction, and responsive to flow of fluid to the power means in the other of said lines to swing in the opposite direction; a pressure reducing metering valve controlling one of said lines, said pressure reducing metering valve being operable to limit pressure to the power means through said one line to a predetermined maximum pressure upon movement of the swing member in one direction, and to meter fluid from the power means through said one line upon movement of the swing member in opposition to fluid supplied to the power means, and a metering valve operable to permit flow of fluid from said power means through said other line during the swinging movement of the swing member only when a predetermined minimum pressure exists in one of said lines.

4,065,011
PORTABLE WATER SCOOP
John J. Teti, Saltville, Va., assignor to Pyott-Boone Machinery, Corporation, Saltville, Va.
Filed Sept. 3, 1976, Ser. No. 720,103
Int. Cl.² E02F *3/81*
U.S. Cl. 214—146 E **11 Claims**

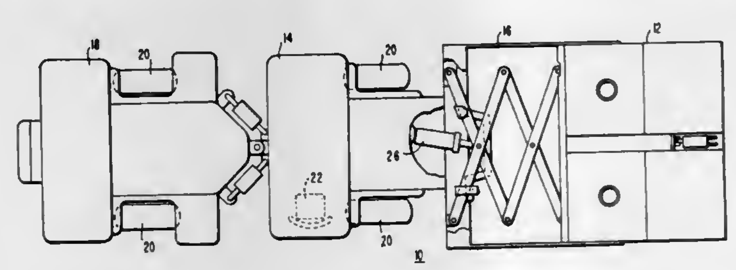

1. A self-powered rubber tired operator controlled mine vehicle for collecting, transporting and discharging water comprising:

a scoop bucket, having an open end and a closed end, supported on one end of the mine vehicle;

a blade, which is hydraulically operated, disposed within said scoop bucket movable between an extended position in proximity to the open end of said scoop bucket and a retracted position, in proximity to the closed end of said scoop bucket;

a hook formed on said hydraulically operated blade;

a water scoop, defining a generally closed vessel, having a pocket formed therein adapted to engage said hook and being formed to fit the contour of said scoop bucket and said blade to permit being drawn into said scoop bucket when engaged by said hook and said hydraulically operated blade is retracted;

said water scoop having a pocket formed therein adapted to engage said hook and being formed to fit the contour of said scoop bucket when engaged by said hook and said hydraulically operated blade is retracted;

said water scoop having a sealable opening formed in one end thereof through which water can flow when unsealed; and,

gate means operable in response to the vehicle operator for opening and closing the sealable opening formed in said water scoop.

4,065,012
LOW LIFT TRUCK
Jack O. Rocco, Burlington, Mich., assignor to Clark Equipment Company, Buchanan, Mich.
Filed Apr. 2, 1976, Ser. No. 673,221
Int. Cl.² B60P *1/02*
U.S. Cl. 214—510 **15 Claims**

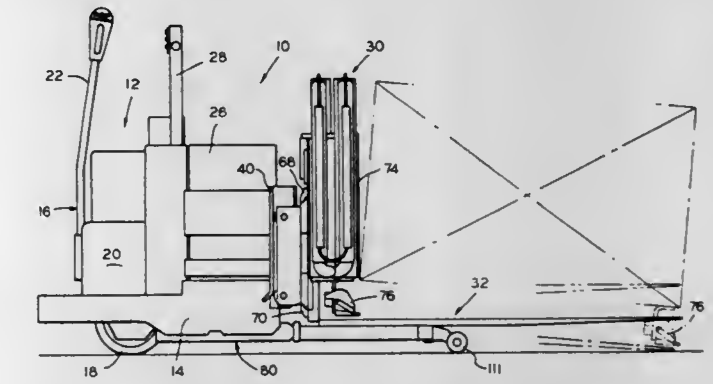

1. In a low lift powered truck, a tractor drive portion having a main frame, hydraulic actuator and guide means supported from and rearwardly of the forward end portion of said frame, vertical guide means supported from a forward end portion of said frame, a relatively short L-frame assembly having a horizontal leg portion extending beneath and forwardly of said main frame and a vertical leg portion actuatable by said hydraulic actuator for guided vertical movement, a pivoted load wheel means and actuator assembly connected to said L-frame assembly and cooperating with said hydraulic actuator means to raise and lower said L-frame bodily vertically, and a relatively long L-frame assembly coupled with said vertical guide means for guided vertical movement in at least a portion of its travel, said long L-frame overlapping, extending forwardly of and elevatable by said short L-frame.

4,065,013
FORKLIFT ATTACHMENT FOR MOVING THREE-POINT MOUNTED EQUIPMENT
Henry K. Orthman, Lexington, Nebr., assignor to Orthman Manufacturing, Inc., Lexington, Nebr.
Filed Sept. 30, 1976, Ser. No. 728,292
Int. Cl.² B66F *9/12;* B60D *1/04*
U.S. Cl. 214—620 **6 Claims**

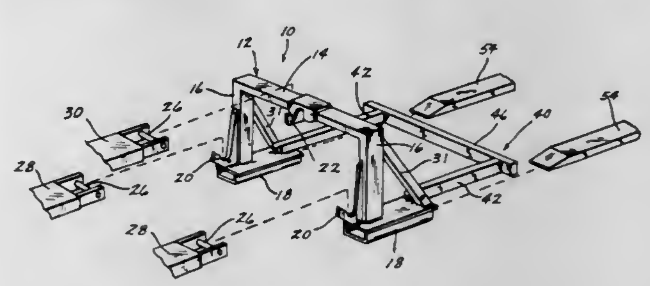

1. A forklift attachment for moving three-point mounted equipment comprising,

an upstanding frame having a cross member and oppositely disposed legs,

connecting means on each leg adapted to detachably engage the arms of a forklift vehicle,

connecting means on each leg and on said cross member adapted to detachably engage the connecting means on a three-point mounted implement, and

a stop means on said frame for selectively spacing said frame from a forklift vehicle by said stop being positioned to engage the upstanding standard on the forklift vehicle, said stop being U-shaped and having a cross member and perpendicularly extending oppositely disposed arms pivotally and operatively connected to said frame legs.

4,065,014
SLIPSHEET PALLET TOOL AND METHOD
Darrell J. Sagmiller, Rte. 1, Box 114, Cornelius, Oreg. 97113
Filed Sept. 27, 1976, Ser. No. 727,226
Int. Cl.^{2} B66F *9/12*
U.S. Cl. 214—621 **4 Claims**

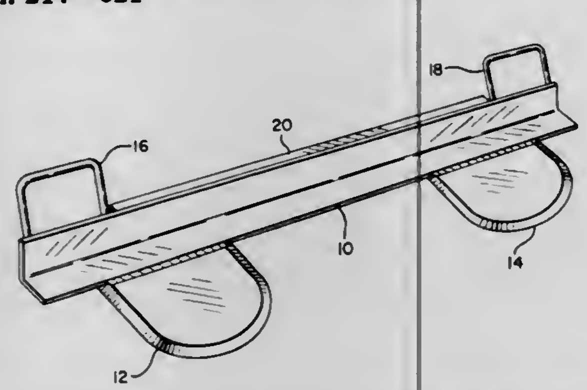

1. A hand-held tool for enabling a pair of lift truck forks to operatively engage and lift a load while said load is stacked on a slipsheet resting directly on a floor, said tool comprising:
a. a laterally extending elongate frame;
b. a pair of plates, having upper and lower major surfaces, attached to said frame at laterally spaced positions along the length of said frame and projecting forwardly from the bottom of said frame in a direction perpendicular to the length of said frame for inserting beneath said slipsheet, said major surfaces of each said projecting plate extending laterally with respect to said frame;
c. a generally laterally extending leading edge on the forwardly projecting portion of each of said plates, each said leading edge being tapered forwardly and downwardly from the upper surface of said plate toward the lower surface thereof so as to form a sharp edge substantially coincident with the lower surface of said respective plate;
d. a pair of laterally spaced, laterally extending cam surfaces, each of said cam surfaces being connected to the rear of a respective one of said plates and being inclined forwardly and downwardly to a level coincident with the lower surface of said plate for engagement by said lift truck forks;
e. a laterally extending rear surface of said frame extending vertically upward from the rear of said plates for engagement by said lift truck forks to push said plates beneath said slipsheet; and
f. means extending rearwardly from the top of said rear surface of said frame for preventing said forks from disengaging upwardly from said rear surface.

4,065,015
FORK AND FRAME ASSEMBLY
Louis Radakovich, 13324 Green Drive, Chesterland, Ohio 44026
Filed Sept. 18, 1969, Ser. No. 858,932
The portion of the term of this patent subsequent to Sept. 27, 1994, has been disclaimed.
Int. Cl.^{2} B66F *9/00*
U.S. Cl. 214—750 **1 Claim**

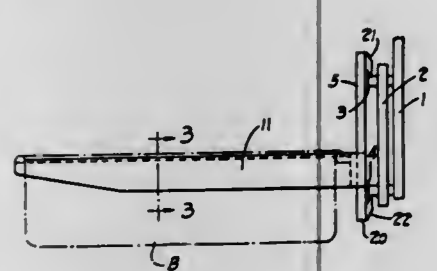

1. In lift frame construction of the class described, in combination, a frame, said frame including a vertical frame section having means for connection to a fork lift truck, horizontal frame means extending outwardly therefrom, said frame means comprising a pair of forks for a fork lift truck arranged in the form of a U-shaped member by connecting together the ends of the normally vertical arms thereof to constitute the cross bar of the said member, the side edges of the normally horizontal arms thereby becoming upper surfaces of the spaced arms of the said U-shaped member, the vertical frame section comprising a pair of vertical parts secured at their lower ends to the side edges of the normally vertical arms, a cross piece extending between the parts at their upper ends, downwardly open upper hooks at said ends, a cross piece connected to the lower side edges of the arms aforesaid, and upwardly open hooks on the latter for connecting the frame to such fork lift truck in cooperation with the upper hooks aforesaid.

4,065,016
COMPOUND VESSEL
David R. Perkins, 41 Wheeler St., Gloucester, Mass. 01930
Filed Dec. 27, 1976, Ser. No. 754,427
Int. Cl.^{2} B65D *1/04*
U.S. Cl. 215—6 **6 Claims**

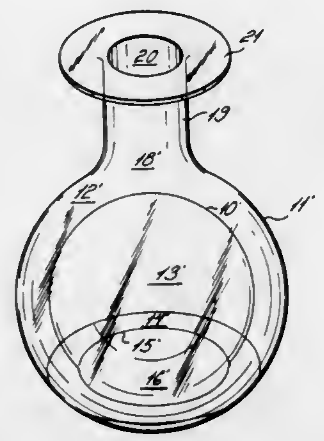

1. A compound vessel formed of a transparent clear material and having a spheroidal main body, comprising spheroidal inner and outer walls with an annular space defined therebetween, the annular space constituting an outer vessel of the compound vessel and the interior space contained by the inner wall constituting an inner vessel of the compound vessel, the outer and inner walls joining at one extremity of the spheroidal main body of the compound vessel to close the outer vessel and form the periphery of a generally circular mouth opening into the inner vessel, said inner vessel being otherwise closed, the outer wall terminating at an opposite extremity of the spheroidal main body of the compound vessel to form the periphery of a generally circular mouth opening into the interior of the outer vessel, said outer vessel being otherwise closed said outer vessel being filled with a transparent clear liquid so that the liquid fills the outer vessel to cover the inner wall when the compound vessel is positioned upon a supporting surface, whereby the inner vessel and the supporting surface completely enclose the interior space of the inner vessel to fully enclose objects contained therein, said spheroidal shape and said liquid cooperating to magnify objects placed in the interior space viewed from any position on the exterior side of the compound vessel.

4,065,017
SAFETY CONTAINER AND CLOSURE
George William Burton, London, England, assignor to Johnsen & Jorgensen (Plastics) Limited, London, England
Filed Oct. 18, 1976, Ser. No. 733,420
Claims priority, application United Kingdom, Oct. 22, 1975, 43418/75
Int. Cl.^{2} B65D *55/02, 85/56;* A61J *1/00*
U.S. Cl. 215—211 **8 Claims**

1. A container and closure assembly comprising a container having a circular mouth, plug means matingly received securely within said mouth, said plug means having a top and a generally cylindrical side wall, said top being configured to prevent a user from gripping and pulling said plug means from said mouth, said container having a side wall with an opening therethrough adjacent said mouth sized to enable a user's finger to solidly contact the plug side wall through said opening, a minor segment of the circumference of said plug side wall having an irregular surface providing sufficient friction to enable a user to manually push said plug means out of said

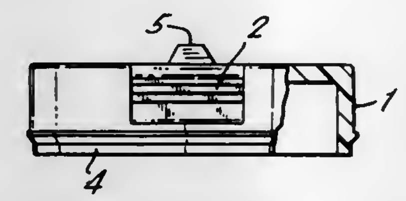

mouth, the major portion of the circumference of said plug side wall having a smooth surface providing insufficient friction to enable a user to manually push said plug means out of said mouth, and said plug means being manually rotatable within said mouth to selectively expose the irregular surface or a portion of the smooth surface of the plug side wall through the opening through the container side wall.

4,065,018
CLOSURE MEANS AND METHOD
William J. Megowen, Carlisle, and Harvey M. Cohen, Needham, both of Mass., assignors to William J. Megowen, Carlisle, Mass.
Filed Aug. 2, 1976, Ser. No. 710,412
Int. Cl.^{2} B65D *51/26, 53/00*
U.S. Cl. 215—231 **15 Claims**

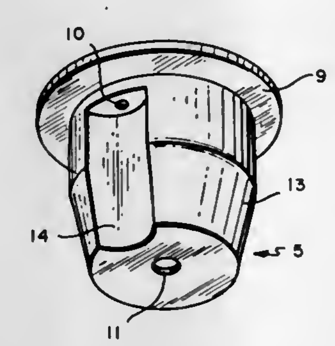

1. A volumetric member for insertion into a fragile container for gassy liquids, said member having a thimble-like shape and having at least two openings extending through the walls thereof, one opening being above the other, the lower of said openings being of a size sufficient to permit liquid within said member to drain therefrom by gravity and the upper of said openings being smaller than the lower of said openings and of a size sufficient to permit pressure equalization between said member and a sealed fragile container into which said member is inserted.

4,065,019
FLUID-TIGHT ISOTHERMAL TANK FOR LIQUEFIED GAS
Jean-Claude Letourneur, Sainte Adresse, and Pierre Jean, Montivilliers, both of France, assignors to GAZ-Transport, Paris, France
Filed Aug. 9, 1976, Ser. No. 712,965
Claims priority, application France, Aug. 22, 1975, 75.25965
Int. Cl.^{2} B65D *25/18*
U.S. Cl. 220—9 LG **23 Claims**

1. In a fluid-tight thermal insulating tank for holding a liquid product, said tank comprising two sets of successive sealing and thermal insulating barriers, a primary set positioned to contact the product contained in the tank and a secondary set located between the primary insulating barrier and an external supporting structure, at least the primary sealing barrier comprising metallic plates having inwardly projecting flanged edges welded together and terminating at the intersection between two walls of the supporting structure in a deformable ring the improvement according to which said ring comprises; a composite deformable angle assembly, said angle assembly comprising, a first flange and a second flange, each flange comprising a plurality of generally parallelopipedic shaped modules, a facing surface including a strip of metal connected to and spacing said modules regularly and in a longitudinally

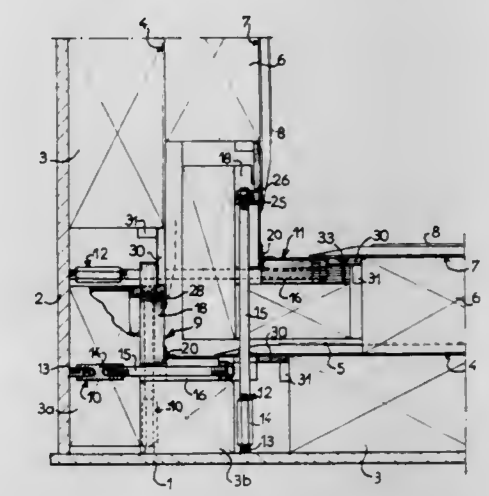

juxtaposed arrangement, and connecting means for joining said facing surface of one of said flanges to the facing surface of the other of said flanges at essentially a right angle so that the modules of said one flange bear against the modules of the other said flange; and securing means connected between the angle assembly and the external supporting structure for holding said modules against the subjacent insulating barrier.

4,065,020
METER BOX HAVING ROTATABLE COVER AND INTERLOCKING MEANS
John Reese Carson, LaVerne, Calif., assignor to Carson Industries, Inc., La Verne, Calif.
Continuation-in-part of Ser. No. 601,047, July 30, 1975, Pat. No. 3,952,908. This application Feb. 23, 1976, Ser. No. 660,061
Int. Cl.^{2} B65D *25/24;* H02G *3/08;* B65D *43/16*
U.S. Cl. 220—18 **10 Claims**

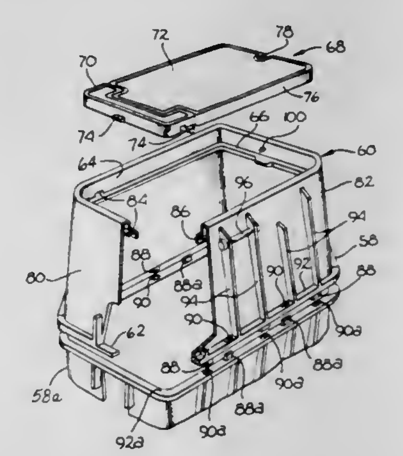

1. A meter box assembly comprising:
a. a round meter box having an open top with an upwardly extending rim forming a ledge member and a plurality of inward extending support members disposed on the inside surface of said box adjacent the top thereof, said support members disposed beneath said rim a predetermined distance;
b. a cover member configured so as to rest on said support members and being axially rotatable between a first open position and a second closed position, said cover having means for engaging said ledge member when in said first position, said means for engaging said ledge member are disengaged therefrom and said cover is removable, and when in said second position, said means for engaging said ledge member engage said ledge member thereby preventing removal of said cover from said box; and

c. locking means, said locking means disposed on said cover such that when said cover is in said second position, actuation of said locking means prevents the substantial rotation of said cover in any direction.

4,065,021
PAD AND DIVIDER COMBINATION
Elizabeth Kedzierski, 775 Austin Ave., Oradell, N.J. 07649
Filed Oct. 28, 1976, Ser. No. 736,609
Int. Cl.² A47B *88/12*
U.S. Cl. 220—22 **4 Claims**

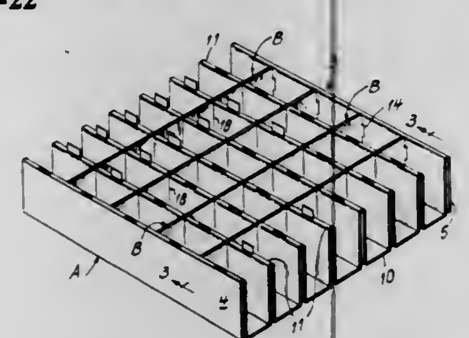

1. A pad and divider of the releasably engaging aperture and notched sheet-type constructed from cut and scored fiberboard or the like and forming partitions intersecting at right angles for dividing a walled container into a plurality of rectangular indexed compartments, said pad and divider comprising;

a. a plurality of suitably cut substantially rectangular blanks forming a series of transverse panels, said transverse panels having vertical slots therein communicating with their lower edges,
b. a substantially rectangular blank suitably cut and scored and folded forming a pad of smaller area than the blank area and a series of parallel lateral upstanding dual coplanar panels hinge-folded at their upper edges, said coplanar panels having spacially related lateral slots within said hinge-folds and having vertical slots therein communicating with the hingefolded edges, said vertical slots interengaging the slots of the transverse panels and interlocking the transverse and coplanar panels at the points of intersection, and
c. indexing means for the compartments of the pad and divider consisting of a plurality of substantially rectangular blanks removably interposed between the walls of the coplanar panels and protruding upwardly through the lateral spacially related slots in the hinge-folded upper edge of said panels to provide an exposed section of blank of sufficient area for accepting indicia.

4,065,022
CISTERN CONTAINER
Henri Cainaud, Talant, France, assignor to Societe des Establissements Hugonnet, Paris, France
Filed Feb. 14, 1977, Ser. No. 768,561
Claims priority, application France, Mar. 5, 1976, 76.06348
Int. Cl.² B65D *7/42;* **A47G** *23/02*
U.S. Cl. 220—71 **13 Claims**

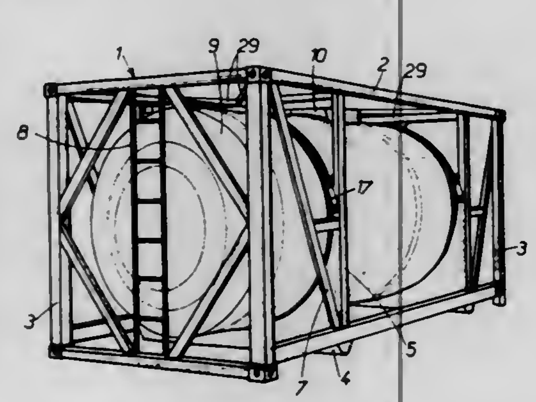

1. A cistern container assembly comprising: a cistern; a frame; a number of substantially semi-circular cradles in the frame on which cradles the cistern rests; a similar number of external reinforcing hoops on the cistern, each hoop corresponding to an associated one of said cradles; an external groove in each reinforcing hoop; and resilient padding means located in each of said grooves; each cradle engaging in the external groove of the associated reinforcing hoop.

4,065,023
CONTAINER AND METHOD OF FORMING
Kenneth R. Rentmeester, Barrington; John A. Jurcenko, Chicago, and John D. Welks, Barrington, all of Ill., assignors to American Can Company, Greenwich, Conn.
Filed Nov. 24, 1975, Ser. No. 635,152
Int. Cl.² B65D *7/34;* **B29D** *23/10*
U.S. Cl. 220—75 **15 Claims**

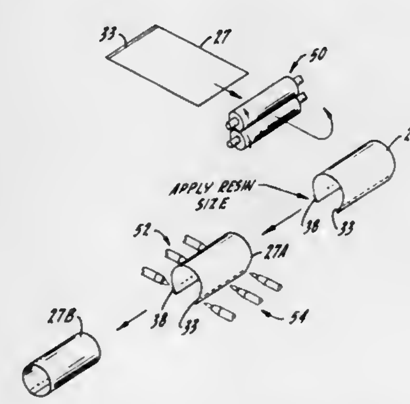

1. A method of producing a sheet metal container body having opposed longitudinal margins overlapped to form a bonded lap side seam, comprising the following steps starting with a pre-cut body blank having one side with a surface to which a bonding resin will bond and having a surface on the other side to which an adhesive will bond:

A. applying to the lap margin of the body blank on said one side a bonding resin size in an area limited to substantially no more than the area of the lap seam, said bonding resin being one which may be initially cured by heat and which attains a stage of final cure when re-heated;
B. heating the body blank substantially in the restricted area of the resin size to a temperature which will initially cure the resin;
C. applying said adhesive to the lap margin of the body blank at said other side, said adhesive being one which attains a stage of activation in the presence of heat and in that stage will bond to the resin; and
D. pressing the lap margins together under conditions of final cure for both the resin and adhesive to complete the bonded seam.

4,065,024
SAFETY CLOSURE FOR PORTABLE RECEPTACLES
Max Raymond Atwell, 1461 Kingsberry Drive, Casper, Wyo. 82601
Filed Oct. 7, 1975, Ser. No. 620,262
Int. Cl.² B65D *47/20;* **A47G** *19/14*
U.S. Cl. 220—203 **6 Claims**

1. A unitary safety pouring and sealing accessory for vessels of the type having a primary opening therein for permitting ingress and egress of liquids and a relatively small venting opening adjacent and coplanar with such primary opening for normally venting the interior of such vessel to the surrounding atmosphere when said primary opening is closed, comprising
flash-arresting means,
intermediate means connected to said flash-arresting means and having a mouth-defining means for the ingress and egress of fluids passing through said flash-arresting means,
cap means forming a closure for said mouth-defining means,

biasing means for resiliently urging said cap means into sealing contact with said mouth-defining means,
securing means intermediate said flash-arresting means and said mouth-defining means for removably securing said unitary safety accessory in the primary opening of such a vessel with said flash-arresting means positioned within such vessel and said mouth-defining means exterior thereof, and an imperforate

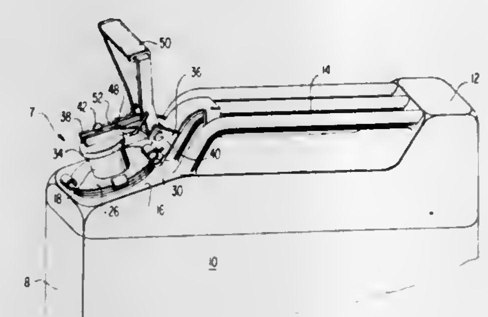

annular gasket means and cooperating flange means contiguous with said securing means and encircling said accessory, said gasket means and said flange means being adapted to form a fluidtype seal between said accessory and the vessel around such primary opening therein, said annular gasket means and said flange means having a sufficient outer diameter to overlie and sealingly close the adjacent venting opening in such vessel, whereby the sole means of ingress and egress of fluids into and from such vessel is through said flash-arresting means.

4,065,025
EASY OPENING CAN END WITH PUSH-IN TABS
Vinson S. Potts, Cherry Hill, N.J., assignor to Crown Cork & Seal Company, Inc., Philadelphia, Pa.
Continuation-in-part of Ser. No. 637,867, Dec. 4, 1975, abandoned, and a continuation-in-part of Ser. No. 596,530, July 16, 1975, abandoned. This application July 1, 1976, Ser. No. 701,623
Int. Cl.² B65D *51/22*
U.S. Cl. 220—258 **56 Claims**

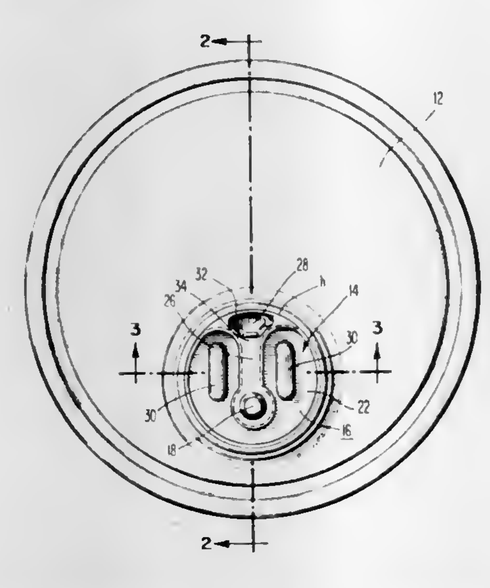

1. A can end of the easy opening type comprising:
an end panel having a preformed dispensing opening therein and a rivet receiving opening; and
a tab adapated to be pushed inwardly including a rivet extending through said rivet receiving opening to the exterior side of said end panel, said tab including a closure portion closing said dispensing opening on the interior side of said end panel.

4,065,026
COMPLIANT GROOVED SEALING RING FOR THREADABLY SECURED ASSEMBLY
Donald L. Williams, Port Clinton, and James T. Baker, Sandusky, both of Ohio, assignors to General Motors Corporation, Detroit, Mich.
Filed Oct. 28, 1976, Ser. No. 736,428
Int. Cl.² B65D *55/14*
U.S. Cl. 220—304 **2 Claims**

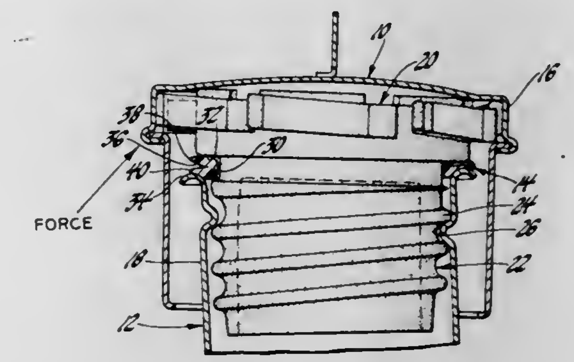

1. In combination, a pair of tubular members threadably secured together which are forceable into a relatively tilted relationship, said members having axially spaced annular seats, an elastomeric seal ring of circular cross-section arranged between and engaging said seats but free to expand radially, said sealing ring having a radially facing circumferential V-shaped groove with a depth substantially greater than half the thickness of the ring and an included acute angle that provides lips between said seats such that when a predetermined tightening torque is applied to tighten one member on the other and the ring is thereby squeezed between the seats and expands radially while the lips are forced toward but do not touch each other and then on forced substantial relative tilting of the members which tends to unseat the ring at some circumferential location the lips at this location remain preloaded to maintain sealing while at the diametrically opposite location the lips are forced toward direct contact.

4,065,027
HINGE ARRANGEMENT FOR ROOM AIR CONDITIONER ACCESS DOOR
Bruce J. Ruark, and Richard L. Shaner, both of Louisville, Ky., assignors to General Electric Company, Louisville, Ky.
Filed Apr. 11, 1977, Ser. No. 786,111
Int. Cl.² B65D *43/14, 51/04*
U.S. Cl. 220—343 **5 Claims**

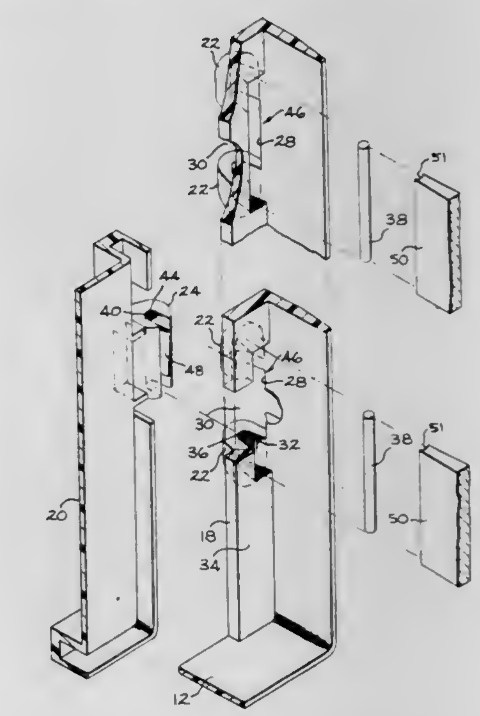

1. A room air conditioner unit including a control means, a front panel member having an opening communicating with

said control means, a cover hingedly mounted on said panel being rotatable between a closed position over said opening to an open position to provide access to said control means through said opening, a plurality of hinge means, each comprising:

a pair of support members formed integral with the front wall portion of said panel, being arranged on the axial ends of an aperture in said panel to form a receiving area between said support members;

axially aligned notch means opening in the rear wall portion of said panel extending into said support members being arranged so that their axial ends extend into said opening in said receiving area;

a hinge member formed integral with said cover being dimensioned to be positioned in said receiving area between said support members;

a longitudinally disposed slot in said hinge member having its opening communicating with said opening in said panel being in axial alignment with said notches in said support members to provide a continuous channel area including the open portion of said notches and slots communicating with said rear wall portion when said hinge member is positioned in said receiving area in its closed cover position;

a pivot pin arranged in said channel area for allowing rotational movement of said cover relative to said panel, while preventing removal of said cover from said panel when it rotates from its open position inasmuch as said pivot pin is trapped between the hinge member and the support members when said cover is rotated from its closed position and the slot opening in said hinge member forming a portion of said channel is disposed radially relative to the openings of said notches.

4,065,028
PAPER NAPKIN DISPENSER
John B. Merila, 6223 E. 127th St., Grandview, Mo. 64030
Filed June 4, 1976, Ser. No. 693,004
Int. Cl.² B65H *1/06, 3/26*
U.S. Cl. 221—36 **2 Claims**

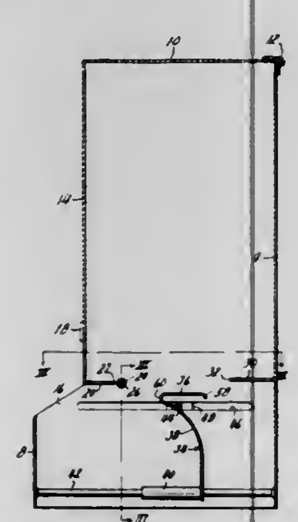

1. In combination with a stack of folded paper napkins each having a final fold producing a pair of flaps extending unequal distances from said fold, a dispenser comprising:

a. a housing having a top, a bottom and forward, side and rearward walls for receiving said napkin stack with their final folds extending forwardly and with the shorter flaps thereof lowermost,

b. spaced apart ledges fixed in said housing and disposed respectively along the forward and rearward walls of said housing, in spaced relation above the bottom of said housing, and respectively supporting the forward and rearward edge portions of said napkin stack, said rearward ledge being of insufficient forward extent to project beneath the shorter flap of the lowermost napkin of the stack, whereby said flap hangs downwardly between said ledges by gravity, and

c. an ejector carried in said housing below said ledges for horizontal forward and rearward reciprocal movement, and including a horizontal top panel extending substantially the full width of said housing in closely spaced apart relation beneath said ledges, and having parallel front and rear edges extending transversely of said housing, the forward edge of said top ejector panel, when said ejector is in its rearmost position, being generally in vertical alignment with the forward edge of said rear ledge, and being disposed, when said ejector is in its forwardmost position, well forwardly of the rearward edge of said front ledge, and a front panel extending the full width of said top panel and being inclined rearwardly and downwardly from the front edge of said top panel, whereby upon forward movement of said ejector, the forward edge of said top ejector panel engages and folds said shorter flap of the lowermost napkin under the rearward edge of said front ledge and projects it outwardly through an opening formed in the front wall of said housing beneath the vertical level of said ledges.

4,065,029
VALVE ASSEMBLY
Stephen Peter Chernock, Flax Mill Lane, Milford, Conn. 06460
Continuation-in-part of Ser. No. 503,365, Sept. 5, 1974, abandoned. This application Jan. 14, 1976, Ser. No. 649,220
Int. Cl.² B67B *7/24*
U.S. Cl. 222—3 **37 Claims**

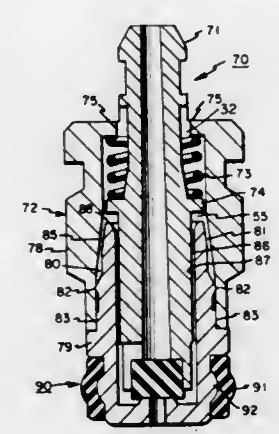

1. A valve assembly for controlling the flow of a combustible fluid comprising:

A. a housing incorporating
  a. a combustible fluid portal at one end thereof positioned for receiving and passing said combustible fluid therethrough,
  b. retaining means formed on the opposite end thereof for securely holding a flexible member in position
  c. an inner wall portion which is slidingly engaged with a valve stem, and a concave debris collecting zone
    1. formed in the housing and
    2. having an entrance located between the retaining means and the slidingly engaged portion of the inner wall of the housing, providing a particulate debris collecting and storing zone;

B. a valve stem
  a. slidably mounted within said housing and extending therefrom,
  b. movable from a first closed position to a second open, fluid flow position,
  c. having an outer wall, a portion of which is in sliding engagement with said inner wall portion of the housing, forming a sliding zone therebetween, and
  d. incorporating a shoulder radially extending from the outer wall thereof towards the peripherally encircling housing and spaced above the entrance of the collection zone, thereby providing a deflector for directing particulate debris into the collection zone and away from the sliding zone, preventing debris fouling of the sliding zone; and,

C. a flexible member
  a. mounted under compression between said shoulder portion of said valve stem and said retaining means of said housing in direct contact with said retaining means, and
  b. normally biasing said valve with said housing in said first closed position.

4,065,030
APPARATUS FOR METERING PARTICLES CONTAINING LIGNOCELLULOSE, SUCH AS WOOD CHIPS OR THE LIKE, WHICH ARE TO BE PROVIDED WITH BINDERS
Berndt Greten, Springe, Germany, assignor to Bison-werke Bahre & Greten GmbH & Co. KG, Germany
Filed May 20, 1976, Ser. No. 688,320
Claims priority, application Germany, May 20, 1975, 7515958[U]
Int. Cl.² B67D *5/14*
U.S. Cl. 222—55 **6 Claims**

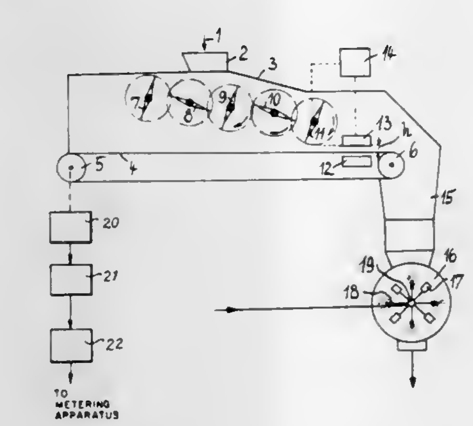

1. Apparatus for metering particles containing lignocellulose, such as wood chips or the like, and binders, for the continuous manufacture of panels, especially chipboards, wherein constant amounts of particles and constant quantities of binder corresponding to the amounts of particles are fed per time unit to a continuously operating mixing machine, comprising a measuring and control unit which measures by radioactive radiation and senses volumetrically any fluctuations in the bulk density of a quantity of said lignocellulose-containing particles; wherein said apparatus for metering said particles and binders maintains the quantitative ratio of said particles and binders at a constant value, with a metering tank equipped with levelling elements and a levelling rake, the metering tank having a bottom consisting of an endless bottom belt guided over deflector rolls and drivable at a constant speed, said bottom belt feeding the material present in the metering tank to a gluing mixer, said gluing mixer being connected to a pump conveying binder from a storage bin, and wherein a top run of the endless bottom belt is associated, between the levelling rake and the deflector roll corresponding to the delivery point, with a radiation-emitting and receiving device serving for the control device for vertical adjustment of the levelling rake and comprising pulse generating means for a vibrating capacitor in order to sense volumetrically any fluctuations in the bulk density.

4,065,031
PROGRAMMABLE DEVELOPMENT CONTROL SYSTEM
Douglas G. Wiggins, Rochester, and Edward L. Kushall, Ontario, both of N.Y., assignors to Xerox Corporation, Stamford, Conn.
Filed July 23, 1976, Ser. No. 708,150
Int. Cl.² B67D *5/08*
U.S. Cl. 222—56 **4 Claims**

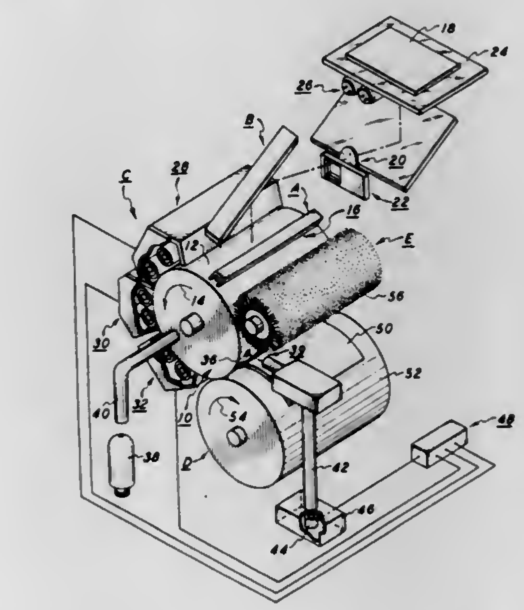

1. A control device for regulating particle dispensing from a storage container to a mix, including:

means for sensing the concentration of particles in the mix at predetermined sampling intervals, said sensing means generating successive signals indicative of the particle concentration within the mix at each sampling interval;

means for summing the signals from said sensing means and forming a plurality of output signals therefrom; and

programmable means, operating on the output signals received from said summing means having operator reprogrammable circuitry to develop predetermined differing actuating signals energizing the storage container to dispense predetermined differing quantities of particles into the mix corresponding to the actuating signal transmitted therefor, said programmable means develops a first actuating signal energizing the storage container to dispense a first predetermined quantity of particles into the mix in response to said summing means generating an output signal indicating that said sensing means detected a particle level concentration beneath a predetermined level for one sampling interval, and said programmable means develops a second actuating signal energizing the storage container to dispense a second predetermined quantity of particles into the mix in response to said summing means generating an output signal indicating that said sensing means detected a particle level concentration beneath a predetermined level for at least three successive sampling intervals with the second predetermined quantity of particles being greater than the first predetermined quantity of particles.

4,065,032
CONTAINER-FILLING MACHINE WITH FILL ADJUSTMENT DURING OPERATION
George C. Lydiksen, Pleasanton, Calif., assignor to Simplex Filler Company, Hayward, Calif.
Filed Oct. 12, 1976, Ser. No. 731,134
Int. Cl.² G01G *13/34;* **G01F** *11/16*
U.S. Cl. 222—77 **12 Claims**

1. In a container-filling machine having a conveyor for moving an open-topped container to and away from a filling station, a filler tube at said filling station for filling said container, a reservoir of material to be filled into said container, a cylinder having an inlet connected to said reservoir and an

outlet connected to said filler tube, means including a reciprocable piston in said cylinder for drawing material into said cylinder from said reservoir upon movement of said piston in one direction and for discharging said material from said cylinder to said filler tube upon opposite movement of said piston, a rotatable member mounted on the frame of said machine, means for rotating said member about a fixed axis, said member having a cam thereon offset from said axis and movable with said member through an orbital path around said axis, and means for reciprocating said piston in response to orbital movement of said cam, the improvement comprising:

- said rotatable member having a slot therein extending radially of said axis,
- a screw-threaded shaft having its axis in a plane perpendicular to the axis of said rotatable member,
- means mounting said shaft in said slot for permitting rotation of said shaft about its axis while restraining said shaft against endwise movement relative to said slot,
- a follower block threaded on said shaft and riding in said slot for translatory movement along said slot in response to rotation of said shaft,
- said cam being mounted on said follower block,

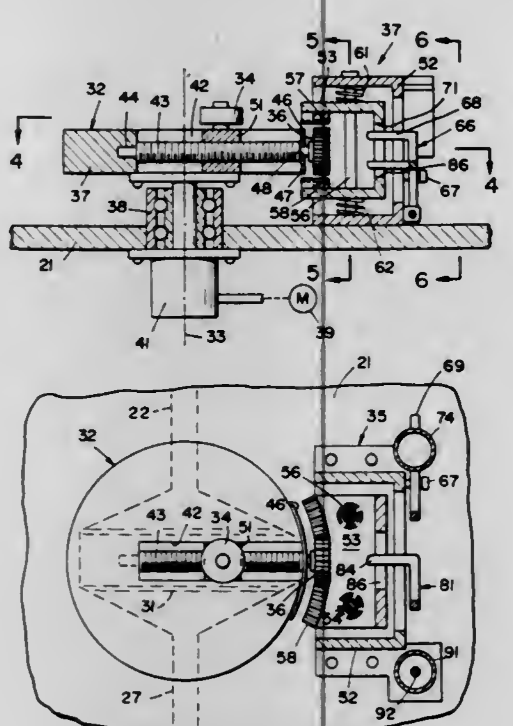

- a pinion gear fixed to said shaft coaxially therewith, said gear being movable through an orbital path in said plane upon rotation of said rotatable member about its axis,
- an arcuate rack member disposed parallel to said orbital path of said pinion gear and spaced from one side of said plane of movement of said pinion gear,
- housing means on said frame mounting said rack member for movement towards and away from said plane of orbital movement of said pinion gear,
- means for moving said rack member towards and away from said plane and into and out of meshing engagement with said pinion gear.

5. In a container-filling machine as set forth in claim 3, the improvement further comprising:

- means for measuring the weight of the material filled into said container and comparing said weight with a reference weight,
- and means responsive to a predetermined degree of deviation in the weight of the material filled into said container from said reference weight for actuating said power means to move said rack member into meshing engagement with said pinion gear.

4,065,033
TUBE CONTAINER

Billy N. Nilson, Mjolby, Sweden, assignor to KeNova AB, Malmo, Sweden

Filed Apr. 2, 1975, Ser. No. 564,551

Claims priority, application Sweden, Apr. 26, 1974, 7405618

Int. Cl.[2] B65D *35/12*

U.S. Cl. 222—107 6 Claims

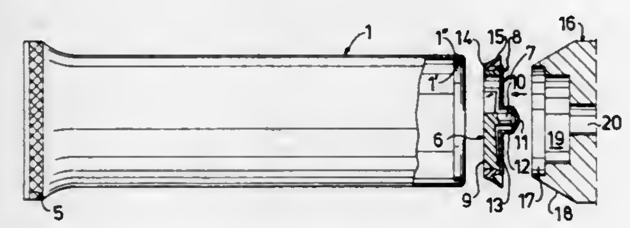

1. A container comprising a tubular member having a first end and a second end, the first end of said tubular member folded inwardly to form a first annular flange at said first end directed toward said second end and defining a first annular space between said first annular flange and said tubular member, a discharge member attached to said tubular member at said first end and being designed to dispense the contents of the container, said discharge member having a peripheral portion with a resilient second annular flange formed thereon having an outer lip portion of unflexed maximum diameter greater than the inner diameter of said tubular member directed toward said first end of said tubular member and defining a second annular space between said resilient annular flange and said discharge member, said resilient annular flange of said discharge member being in resilient contact with the inner surface of said tubular member and with said lip portion sealingly retained in said first annular space, and said first annular flange of said tubular member being retained in said second annular space.

4,065,034
GUN-TYPE DISPENSER FOR HEAT SOFTENABLE ADHESIVE OR SEALANT COMPOUNDS

John E. Callan, Broken Arrow, Okla., assignor to Cities Service Company, Tulsa, Okla.

Filed July 30, 1976, Ser. No. 710,068

Int. Cl.[2] B67D *5/62*

U.S. Cl. 222—146 HE 1 Claim

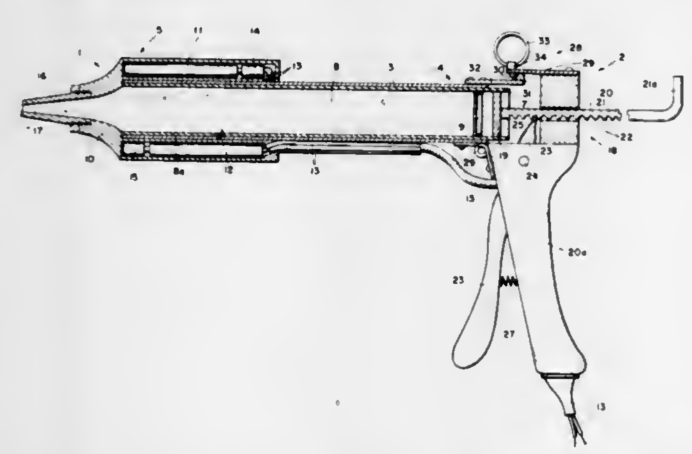

1. A gun-type dispenser for applying a heat softenable adhesive or sealant compound to a receiving surface therefor, comprising:

- a. a barrel having a breech at the inner end and a discharge orifice at the outer end, said breech having an opening therein for the loading of cartridges that is oriented axially with respect to said barrel,
- b. electric heating means for heating said outer end of the barrel,
- c. breech access means for uncovering said opening in the breech for insertion of a cartridge of said compound into the breech and for closure of said opening following insertion of a cartridge therein, said breech access means comprising a plunger having a plunger carrier means that is pivotally connected to said barrel whereby said plunger swings outwardly from said barrel for uncovering said opening in the breech, and swings inwardly for closure of the opening following insertion of a cartridge of said compound, said plunger including a toothed portion which extends rearwardly of said barrel, said toothed portion having a set of longitudinally aligned teeth, and further comprising a hand operated, toothed driving element which engages the teeth of said plunger, and wherein said plunger is advanced toward said outer end of the barrel when said driving element is operated, said carrier means for said plunger including a handle, and said driving element being pivotally connected to the handle and hand operable upon gripping said handle, said driving element comprising a pawl and said teeth on the plunger being ratchet teeth, and
- d. mechanical feeding means at the inner end of the barrel for urging the compound of an inserted cartridge into said outer end of the barrel, said feeding means being hand operated.

4,065,035
POURING FITMENT FOR METAL TOPPED CONTAINER

John C. Eissler, Drexel Hill, Pa., assignor to Crown Cork & Seal Company, Inc., Philadelphia, Pa.

Continuation of Ser. No. 475,981, June 3, 1974. This application July 12, 1976, Ser. No. 704,322

Int. Cl.[2] B65D *25/42*

U.S. Cl. 222—153 4 Claims

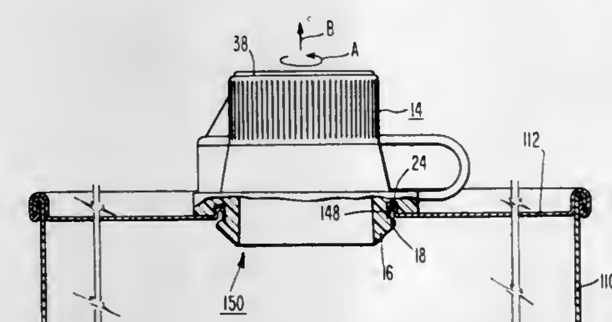

1. An improved child-proof, closure-container combination comprising:

- a plastic closure including
  - an annular portion extending generally downwardly in a direction substantially parallel to the axis of the closure and having a radially outwardly extending protuberance,
  - a flange extending radially outwardly from said annular portion above said protuberance and having a downwardly extending projection spaced radially outwardly from said annular portion so as to form an annular groove between the radially inwardly facing surface of said downwardly extending projection and a radially outwardly facing surface of said annular portion above said radially outwardly extending protuberance,
  - an annular neck extending from said flange and said annular portion and having a dispensing opening at the upper end thereof, and
  - a cap removably covering said dispensing opening, said cap and said neck including means responsive to the sequential application of torque about the axis of said closure and an axially directed force to remove said cap from said dispensing opening;
- a metal container including a metallic member having an opening receiving said downwardly extending annular portion of said plastic closure, said metallic member having a bead extending above said metallic member at said opening and into said groove with the radially innermost portion of said bead extending generally downwardly and having a terminal edge in bitting engagement with said annular portion at said closure at said protuberance; and
- a substantial portion of said radially inwardly facing surface is inclined at an angle less than 10° with respect to said axis and said bead includes a radially outwardly facing surface adjacent said panel juxtaposed to said radially inwardly facing surface and inclined at an angle of less than 10° with respect to said axis.

4,065,036
ACTUATOR CAP HAVING A BUTTON ROTATABLY BETWEEN DISPENSING AND NON-DISPENSING POSITIONS

Donald C. Kirk, Jr., Naugatuck, Conn., assignor to VCA Corporation, Baton Rouge, La.

Filed Dec. 6, 1976, Ser. No. 747,440

Int. Cl.[2] B65D *83/14*

U.S. Cl. 222—153 9 Claims

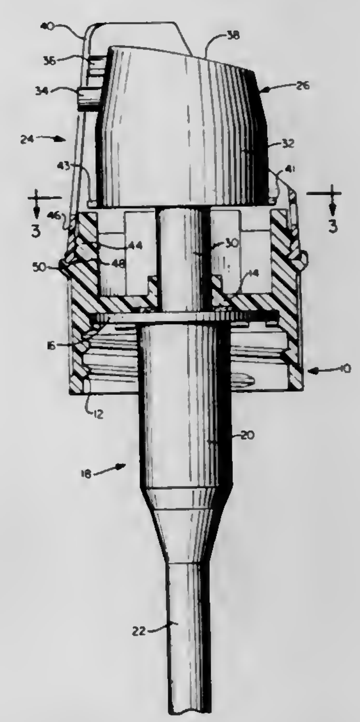

1. An actuator assembly for a dispensing device comprising, in combination:

- a. a cap means having means for attachment to a container and a series of flat means projecting upwardly from said cap means;
- b. an operable dispensing button and means movably mounting said button on said cap means for both turning and axial movement, said button having a series of flat sides, at least one of said sides having tab means thereon, said flat sides and said tab means being arranged to be received within said flat means when properly positioned;
- c. cover means enclosing said button adapted to expose a portion of the button for finger engagement; and,
- d. guide means on said button and said cover means for preventing relative turning therebetween while enabling relative axial movement to be had.

4,065,037
NON-SPURTING TWIST-OPEN DISPENSING CLOSURE

Thomas L. Haller, Cincinnati, Ohio, assignor to The Procter & Gamble Company, Cincinnati, Ohio

Filed July 15, 1976, Ser. No. 705,725

Int. Cl.[2] B65D *47/26*

U.S. Cl. 222—153 12 Claims

1. A two-piece, non-spurting dispensing closure for a container of the type having a finish, said closure comprising a shell and a tip, said shell having a top portion and an annular skirt for surrounding said container finish, means for attaching said skirt to said container finish, an upstanding cylindrical chimney being located centrally of said top portion of said shell, said chimney having a dispensing passageway extending

axially therethrough and through said top portion of said shell, a cylindrical plug, means for supporting said plug axially and at the upper end of said chimney so as to extend thereabove, a pair of upstanding diametrically opposed posts located on said top portion of said shell to either side of and spaced from said chimney, each of said posts having a thread-receiving groove opening away from said chimney, said tip comprising a top portion and a downwardly depending skirt portion, said top portion of said tip having a dispensing opening located centrally thereof and passing therethrough, said tip having a cylindrical wall surrounding said dispensing opening and depending downwardly from said top portion thereof, said cylindrical wall surrounding said shell chimney and having an inside diameter so sized as to be rotatable about and axially shiftable with respect to said shell chimney, a pair of diametrically opposed inclined planes to either side of said cylindrical wall,

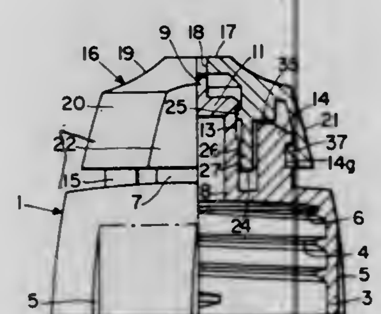

each of said inclined planes contacting an upper edge of one of said shell posts, a pair of thread segments located on diametrically opposed inside surface portions of said tip skirt, each of said thread segments paralleling and being spaced from one of said inclined planes and being engaged in said groove of one of said shell posts whereby when said tip is twisted relative to said shell in one direction each of said shell posts cooperates with its respective tip thread segment and inclined plane to elevate said tip with respect to said shell from a retracted closed position wherein said plug is located in and closes said tip dispensing opening to an extended open position wherein said plug is withdrawn from said tip dispensing opening and when said tip is twisted relative to said shell in an opposite direction each of said posts cooperates with its respective thread segment and inclined plane to lower said tip with respect to said shell from said extended open position to said retracted closed position.

4,065,038
PUMP SPRAYER
Wallace Farnholm Magers, Leawood, Kans.; Larry Lee Hudson, and James Phillip Workman, both of Lee's Summit, Mo., assignors to Realex Corporation, Kansas City, Mo.
Filed Apr. 7, 1976, Ser. No. 674,577
Int. Cl.² G01F *11/36*
U.S. Cl. 222—321 **2 Claims**

1. In a hand pump having a tubular plunger and a coaxial valve sleeve on the plunger shiftable freely between port opening and port closing positions in response to relative movement between the plunger and a barrel that telescopically receives the plunger and sleeve in frictional engagement with the sleeve, the improvement comprising:

said plunger having a neck encircled by said sleeve and said neck being of diametrically reduced dimensions with respect to the remainder of the plunger,

said neck including a radially inwardly tapering section at one end thereof and a radially outwardly tapering section at the opposite end thereof,

there being a receiving port in the neck between said sloping sections thereof for communicating the inside of the plunger with the barrel when the sleeve is in its port opening position,

said sleeve being generally hyperbolic in longitudinal cross section, having a radially inwardly bowed inner surface that is generally complemental to the neck of the plunger, said inner surface of the sleeve having a pair of radially outwardly extending, annular steps therein on opposite sides of said receiving port, presenting a pair of shoulders at the radially inward extent of said steps in position for alternate sealing engagement with the corresponding tapering sections of said neck as the sleeve moves between its port opening and port closing positions,

said plunger being of mutually detachable two-part construction at said neck, a first of said parts containing said inwardly tapering section of the neck and the second of said parts containing said outwardly tapering section of the neck,

said receiving port being located in said second part,

said first part being provided with a first transversely extending annular end face circumscribing the tubular pas-

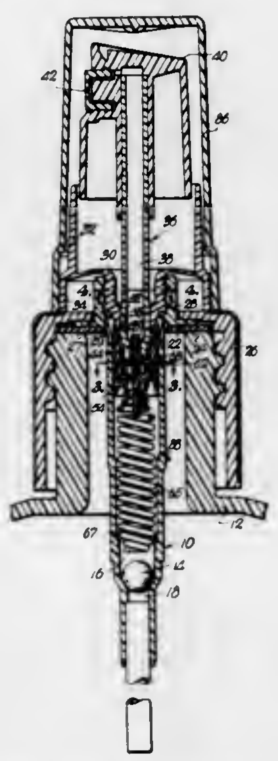

sage of the plunger, said second part being provided with a second transversely extending, annular end face abutting said first face in coaxial registration therewith and circumscribing a recess in the second part, said receiving port comprising a notch through said second face that communicates said recess with the exterior of the plunger,

said second part being provided with a fluted stem projecting out of said recess and into the passage of the plunger, said stem being frictionally retained by said passage,

said second part being provided with an alternative symmetrical set of outwardly tapering section, second annular face, receiving port notch, recess, and fluted stem opposite the aforementioned corresponding components such that said second part may be inverted end-for-end during assembly of the two parts.

4,065,039
SPRING ASSEMBLY FOR FRONT OPENING HOLSTER
John E. Bianchi, and Richard D. E. Nichols, both of Fallbrook, Calif., assignors to Bianchi Leather Products, Inc., Temecula, Calif.
Division of Ser. No. 492,757, July 29, 1974, Pat. No. 3,977,583. This application Apr. 23, 1976, Ser. No. 679,771
Int. Cl.² F41C *33/02*
U.S. Cl. 224—2 B **3 Claims**

1. A spring assembly for biasing handgun front opening holster sides together comprising;

first and second springs, each including an elongated, generally straight outer end portion, and an intermediate bight portion generally in one plane and an inner end;

the inner ends of said first and second springs defining a plane generally normal to the plane of said respective outer end portion and intermediate bight portions;

means securing said inner ends together whereby said outer end portions constitute a pair of parallel free ends which define a gap therebetween and cooperate to provide spring resistance to opening of the gap therebetween; and

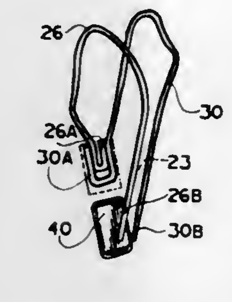

wherein said inner ends each include a reentrant portion of different nestable size.

4,065,040
TENNIS BALL HOLDER
Stephen D. Steere, 6364 Trancas Canyon Road, Malibu, Calif. 90265
Continuation of Ser. No. 545,873, Jan. 31, 1975, abandoned. This application Aug. 30, 1976, Ser. No. 718,577
Int. Cl.² A45F *5/02*
U.S. Cl. 224—5 D **5 Claims**

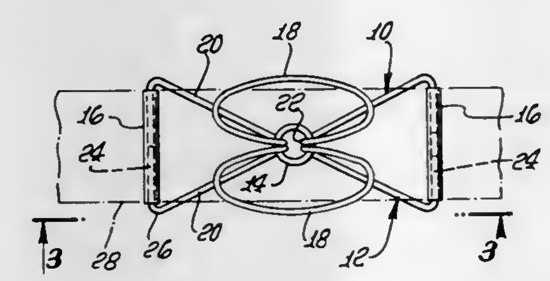

1. In a belt-mounted tennis ball holder, the combination of:

a. a one-piece upper wire member provided with a central portion formed into a downwardly facing, substantially closed loop having adjacent ends integrally joined to inner ends of laterally extending legs which have downturned outer end portions;

b. a one-piece lower wire member substantially identical to said upper wire member and provided with a central portion formed into an upwardly facing, substantially closed loop having adjacent ends integrally joined to inner ends of laterally extending legs which have upturned outer end portions;

c. first connecting means connecting said downturned outer end portions to said upturned outer end portions, respectively;

d. second connecting means connecting said upper wire member to said lower wire member adjacent the junctions of said ends of said loops with said inner ends of said legs of said upper and lower wire members, said connecting means resisting movement of said loops away from each other; and

e. the connections between said downturned outer end portions of said upper wire member and said upturned outer end portions of said lower wire member being spaced apart a distance greater than the diameter of said loops, said spaced outer end portions providing a stable base for said loops.

4,065,041
WRAP-AROUND ROOF RACK
Clifford Arnold Stegavig, 1500 6th Avenue E., Prince Rupert, British Columbia, Canada (V8J 1Y2), and David McNair Stringer, 1506 7th Avenue E., Prince Rupert, British Columbia, Canada (V8J 2K3)
Filed June 21, 1976, Ser. No. 698,476
Claims priority, application Canada, June 25, 1975, 230122
Int. Cl.² B60R *9/04*
U.S. Cl. 224—42.1 D **7 Claims**

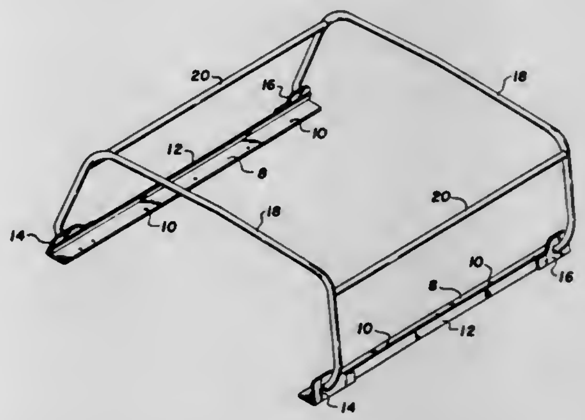

1. A rack for a recreational vehicle having a rear portion formed with a longitudinal sill at each side and including a body supported by the sills and generally enclosing the rear portion, the body having side walls and a roof of relatively poor load-bearing characteristics, the rack comprising:

spaced first and second runners adapted to be located on the longitudinal sills between the body and the sills;

a plurality of load-bearing members for extending upwardly and across the vehicle between the first and second runners externally of the side walls and roof of the body and for carrying loads above the roof.

4,065,042
WEB TRANSPORTING APPARATUS
Erich Zielinski, Bergen, N.Y., assignor to Eastman Kodak Company, Rochester, N.Y.
Filed Feb. 22, 1977, Ser. No. 770,952
Int. Cl.² G03B *1/56*
U.S. Cl. 226—92 **9 Claims**

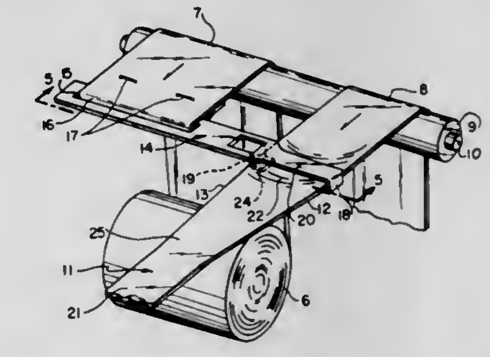

1. Web transporting apparatus comprising:

an endless transport element having at least one reduced width section;

means for longitudinally moving said transport element; and

means for connecting a leading portion of a web and said transport element for moving the web with said transport element,

said connecting means including gripper members spaced apart a distance greater than the width of said reduced width section of said transport element to allow said reduced width section to be received between said gripper members, but said distance being sufficiently less than the width of another section of said transport element following said reduced width section to cause said following section to be engaged by said gripper members after said

reduced width section is longitudinally moved from between them.

4,065,043
ROTARY SPEED MINUTE REGULATING DEVICE FOR OUTPUT SHAFT IN PULLER APPARATUS
Katsuji Ohashi, 28-2, 1-chome, Yawataya, Osaka, Japan
Filed Apr. 23, 1976, Ser. No. 679,314
Claims priority, application Japan, Apr. 23, 1975, 50-49991
Int. Cl.² B65H *17/22*
U.S. Cl. 226—141 **7 Claims**

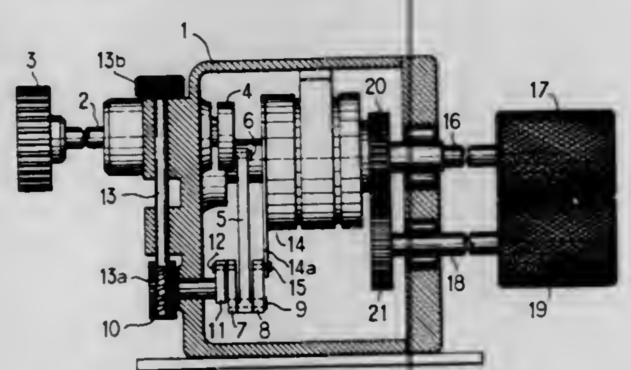

1. For use with a sewing machine, a cloth pulling apparatus comprising a casing, a rotatable input shaft carried by said casing and adapted for coupling to a rotary drive source, a pair of output shafts carried by said casing and provided with cloth-pulling rotors mounted so as to feed cloth through a nip between rotors when rotated in opposite directions, and variable transmission means within the casing for converting rotary movement of said input shaft to intermittent unidirectional rotation of at least one of said output shafts and cloth-pulling rotors, said transmission means comprising a rod carried eccentrically and pivotally at one of its ends by said input shaft such that rotation of said input shaft effects oscillation of the other end of said rod, a one-way drive member coupled to said output shafts such that oscillatory movement of said one-way drive member effects intermittent unidirectional but respectively opposite rotation of said output shafts, means for effecting oscillatory movement of said one-way drive member in accordance with oscillation of said other end of said rod, adjustable means coupled to said eccentric rod for determining and varying the oscillatory path of said other end of said rod, and manually actuatable means accessible on the exterior of said casing for adjusting said adjustable means so as to adjustably set the oscillating path of said other end of said rod and hence the oscillatory movement of said one-way drive member, said adjustable means comprising a first link mounted for pivotal movement about an adjustably movable center and coupled to said rod such that pivotal movement of said first link about its center determines the oscillatory path followed by said other end of said rod, and said manually actuatable means comprising an adjustment member extending from the exterior of said casing and coupled with said adjustably movable center for determining and varying the location of said adjustably movable center within said casing.

4,065,044
CAPSTAN
Alan Painter, 4276 Lindblade Drive, Apartment 9, Los Angeles, Calif. 90066; Daniel R. O'Neill, 745 24th St., Santa Monica, Calif. 90402, and George L. Glaeser, Jr., 11431 Jo Anne Place, Culver City, Calif. 90231
Filed Dec. 29, 1975, Ser. No. 644,886
Int. Cl.² B65H *17/20*
U.S. Cl. 226—188 **5 Claims**

1. In a magnetic tape transport system, a capstan, driven by a capstan motor having a drive shaft, for accelerating a length of magnetic tape, comprising:

a. a monolithic member having a pair of disc-shaped sidewalls and a cylinder-shaped sidewall coupling the peripheries of said disc-shaped sidewalls so that they are parallel to each other, said monolithic member being formed from a metallic material which is substantially thin wherein said capstan is adapted to be coupled to the drive shaft of the capstan motor and each of said disc-shaped sidewalls has a plurality of outer holes, each of said holes being substantially adjacent to the periphery of said disc-shaped sidewall and aligned with one of said outer holes in the other of said disc-shaped sidewalls; and

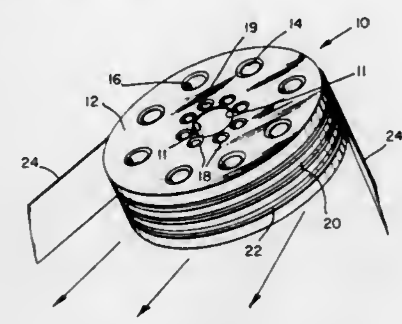

b. a plurality of hollow, cylindrical posts, disposed perpendicular to the plane of said disc-shaped sidewalls in some of said outer holes and coupling said disc-shaped sidewalls together in order to reinforce said capstan.

4,065,045
FASTENER DRIVER TOOL
Winston C. Pray, Lombard, Ill., assignor to Flexible Steel Lacing Company, Downers Grove, Ill.
Filed Dec. 1, 1976, Ser. No. 746,636
Int. Cl.² B25C *1/02*
U.S. Cl. 227—147 **6 Claims**

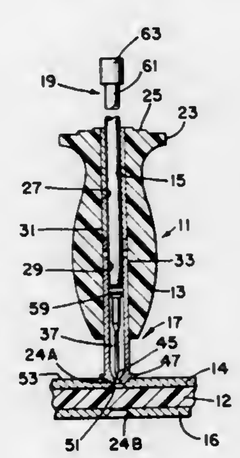

1. In a tool for use in positioning and inserting elongated fastening devices in a workpiece, the improvement comprising expandable housing means defining an elongated bore having a longitudinal axis and extending through said housing means, said bore having a receiving end and a discharging end, elongated laterally expandable chuck means disposed at least partly within said bore in axial alignment with said bore, said chuck means receiving said fastening device, said chuck comprising at least two elongated jaws cooperatively defining an axial bore having a receiving end and a discharging end, the inner diameter of which tapers radially inwardly from a point within said bore toward said discharging end, an orienting means integral with said jaw means for orienting the longitudinal axis of said housing means including a means defining a truncated conical outline at the discharging end of said jaws and a radially outwardly extending shoulder means located above said truncated conical outline, and driver means including a force-receiving end and a driving end slidably received within said chuck means.

4,065,046
METHOD OF MAKING PASSAGE STRUCTURES
John A. Roberts, North Chelmsford, and Peter R. Roberts, Groton, both of Mass., assignors to Brunswick Corporation, Skokie, Ill.
Division of Ser. No. 333,112, Feb. 16, 1973, Pat. No. 3,868,792, which is a division of Ser. No. 3,931, Jan. 19, 1970, Pat. No. 3,737,367, which is a division of Ser. No. 778,679, Nov. 25, 1968, Pat. No. 3,506,885, which is a continuation-in-part of Ser. No. 471,123, July 12, 1965, abandoned. This application Dec. 16, 1974, Ser. No. 533,032
Int. Cl.² B23P *17/00;* **B32B** *3/10*
U.S. Cl. 228—156 **14 Claims**

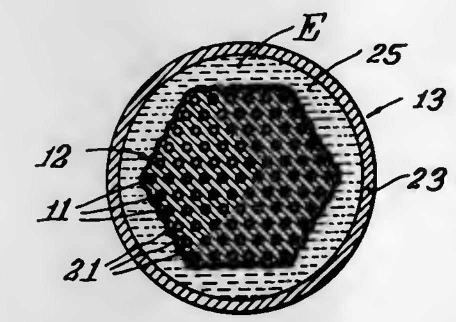

1. A method of making a passage structure having a plurality of substantially parallel unmachined through passages comprising the steps of:

1. providing a plurality of sacrificial elongated metal elements each surrounded by a metal tube, the metal of the elements differing from that of the tubes thereby forming a plurality of composite elements;
2. tightly packing the composite elements in a substantially parallel arrangement;
3. reducing the arrangement
   i. to consolidate it into a substantially void free body, and
   ii. to subsequently further reduce the body to integrate by solid state diffusion the adjacent tubes into a monolithic metallurgical matrix with a homogenous microstructure and concomitantly substantially diminish the cross section of the elements and the thus formed matrix between the elements;
4. cutting the body into preselected lengths; and
5. removing the sacrificial elements from the tubes to define a plurality of unmachined passages.

14. A method of making passage structures having substantially parallel unmachined through passages comprising the steps of:

1. providing a plurality of sacrificial elongated metal elements each surrounded by a metal tube, the metal of the elements differing from that of the tubes, to form a plurality of composite elements,
2. tightly packing the composite elements in a parallel manner inside a first enclosure, the packing arranged to achieve a maximum packing density and the enclosure made from the same metal as the tubes;
3. evacuating the first enclosure;
4. sealing the evacuated first enclosure;
5. heating the sealed evacuated first enclosure and its contents;
6. reducing the sealed evacuated enclosure to
   i. form a void free arrangement eliminating any interstices between the tubes,
   ii. reduce the arrangement in cross section to integrate the tubes into a monolithic first matrix by solid state diffusion, and
   iii. mechanically reduce the cross section of the integrated matrix and the cross section of the elements to a substantially smaller size;
7. cutting the constricted arrangement into elongated sections of a preselected length;
8. tightly packing the sections in a parallel manner inside a second enclosure, the second enclosure made from the same metal as the first enclosure and the tubes;
9. heating the second enclosure and its contents;
10. reducing the second enclosure to
   i. form a void free second arrangement eliminating any interstices between the elongated sections,
   ii. reduce the second arrangement in cross section to integrate the sections and the second enclosure into a monolithic second matrix by solid state diffusion, and
   iii. mechanically reduce the cross section of the integrated first and second matrixes and the cross section of the elements to substantially smaller size thus forming a matrix unit;
11. cutting the matrix unit into preselected lengths; and
12. removing the sacrificial elements thus providing the desired passage structure.

4,065,047
POLYGONAL CARTON WITH BOTTOM REINFORCEMENT AND BLANK THEREFOR
Walter B. Swan, 1400 W. 44th St., Chicago, Ill. 60609
Continuation-in-part of Ser. No. 719,245, Aug. 31, 1976, which is a division of Ser. No. 601,593, Aug. 4, 1975, Pat. No. 3,977,594. This application Sept. 1, 1976, Ser. No. 719,435
Int. Cl.² B65D *5/10, 5/36*
U.S. Cl. 229—41 C **16 Claims**

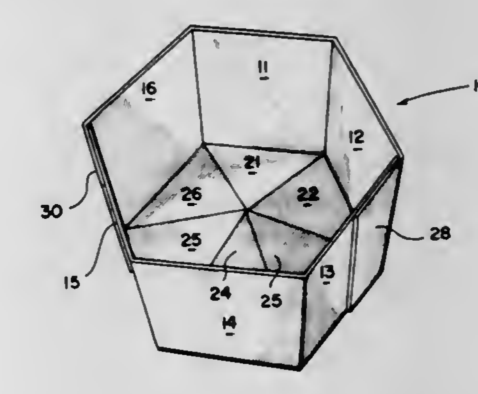

1. A polygonal carton having a plurality of side panels and a strong weight supporting bottom formed by a plurality of generally triangular bottom panels equal in number to said side panels and a plurality of interconnecting webs, each web extending between a pair of adjacent bottom panels, each said bottom panel being hingedly connected to one of said side panels, being inclined upwardly from the bottom edge of the side panel to which it is connected so as to form an acute angle therewith, having two side edges which abut adjacent side edges of adjacent bottom panels and having said webs on either side thereof hingedly connecting said bottom panel to an adjacent panel, and each said web having a fold line therein which divides said web into two rib sections and being folded approximately 180° at said fold line to form a double-ply reinforcing rib, at least one of said fold lines extending along a line which is parallel to said side panels and which extends downwardly from a point coincident with the apexes of two adjacent bottom panels interconnected by that web, whereby a load which is placed on said bottom and which urges said bottom panels downwardly will be supported by the locking and bearing engagement between said abutting edges of said bottom panels and by said interconnecting webs.

4,065,048
SELF-LOCKING FLANGED CAP
William M. Pilz, III, Eldridge, Iowa, assignor to Container Corporation of America, Chicago, Ill.
Filed Sept. 29, 1976, Ser. No. 727,717
Int. Cl.² B65D *5/64, 43/08*
U.S. Cl. 229—43 **2 Claims**

1. In a self-locking cap, for a tubular container having opposed pairs of side and end walls with integral flanges extend-

ing outwardly and downwardly from the upper edges thereof, the combination of:

a. a generally rectangular top wall having opposed pairs of first and second flanges depending therefrom to form a box-like structure open at the bottom for receiving the upper end of an open top container;

b. each of said flanges including an outer panel, foldably joined at its upper edge to a side edge of said top wall and extending downwardly therefrom, and an inner panel, foldably joined to a lower edge of said outer panel and extending upwardly therefrom on the inside thereof, which form a pocket for receiving a downwardly extending flange of said container;

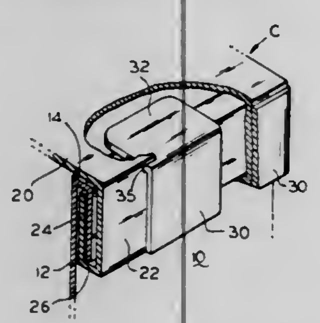

c. integral retaining means for maintaining said cap and container flanges in interlocking relationship;

d. said retaining means including:

i. opposed pairs of retaining flaps each foldably joined at one end edge to a related side edge of a first flange outer panel and folded to overlie an adjacent second flange outer panel;

ii. a lock tab foldably joined to an upper edge of each retaining flap adjacent the other end thereof and receivable with a related aperture in said second flange, which aperture is located adjacent the juncture of said top wall and said second flange outer panel.

4,065,049

MULTI-LAYER BAG OPEN AT ONE SIDE

Fritz Achelpohl, and Herbert Schmedding, both of Lengerich, Germany, assignors to Windmoller & Holscher, Lengerich, Germany

Filed Dec. 11, 1975, Ser. No. 639,710

Claims priority, application Germany, Dec. 30, 1974, 2461828

Int. Cl.² B65D *33/02*

U.S. Cl. 229—55 **3 Claims**

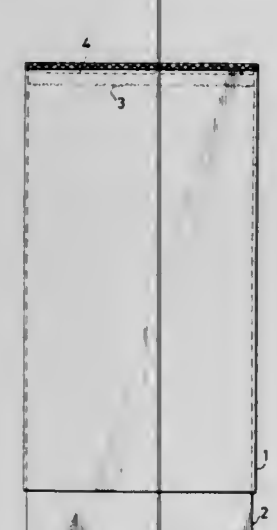

1. A bag open at one side, comprising an outer bag of at least one ply of paper and having a base seam and an inner bag of plastics film provided with a base weld seam at a first end and a Z fold at a second end wherein the first end of the inner bag is securely fastened to the base seam of the outer bag and having a tear-off line of weakness disposed between the base seam of the outer bag and the base weld seam of the inner bag.

4,065,050

SIGNAL DEVICE FOR RURAL TYPE MAILBOXES

Harrell E. Hunt, 152 Oakwood Estates, Scott Depot, W. Va. 25560

Filed Jan. 27, 1977, Ser. No. 763,032

Int. Cl.² A47G *29/12*

U.S. Cl. 232—34 **17 Claims**

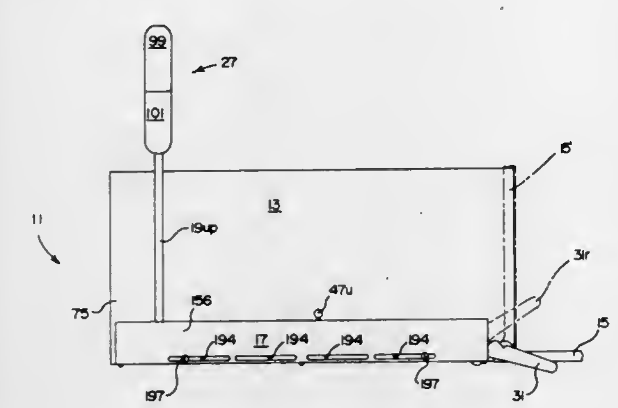

1. A signal device for attachement to rural mailboxes of the type having an outwardly swinging door substantially constituting the front end thereof, said signal device comprising elongated frame means for attachment to the lowermost side of the mailbox with the longitudinal axis of said frame means substantially coextending along a front to rear dimension of the mailbox, signalstaff means having lower and upper ends thereto with said lower end thereof being pivotally attached to said frame means for pivotal movement between an upright position and a recumbent cocked position, signalstaff bias means for yieldably urging said signalstaff means toward said upright position, omnidirectional signalhead means attached to said upper end of said signalstaff means for providing conspicuous evidence from any angle of view that the door of the mailbox has been opened, trigger means pivotally attached to said frame means for selectively holding said signalstaff means in said recumbent cocked position when the door of the mailbox is closed and for releasing said signalstaff means as the door is opened, said trigger means including actuating lever means disposed adjacent the door for operable engagement therewith and whereby said trigger means is operated to enable said signalstaff bias means to carry said signalstaff means to said upright position as the door is opened, and lock means for precluding movement of said signalstaff means upon the releasing of said signalstaff means by said trigger means as the door of the mailbox is opened.

4,065,051

REFUSE CONTAINER

Frederick J. Jones, 2310 Cherry Ridge Lane, Brandon, Fla. 33511

Filed July 1, 1976, Ser. No. 701,523

Int. Cl.² B65D *91/00*

U.S. Cl. 232—43.2 **12 Claims**

1. The refuse container means comprising an upper and lower container member arranged in telescoping relation relative to each other, said upper container member comprising a substantially hollow element having a lid attached to the upper portion thereof, said lid including an aperture formed therein and an access door hingedly attached thereto, said access door movable between an open and closed position to permit selective access to said refuse container when said access door is in said open position, said lower container member comprising a substantially hollow element having a plurality of discharge doors hingedly attached to the lower portion thereof, said hingedly attached discharge doors movable between an open and closed position to permit selective discharge from said refuse container means when said discharge doors are in said open position, and a plurality of cables corresponding to said plurality of discharge doors, each said cables attached to the first hollow element at the upper end and each said cable attached to said corresponding discharge door at the lower end thereof, said first and second substantially hollow element moveable between an extended and re retracted position such that said discharge doors are moved from said closed position to said open position when said first and second substantially

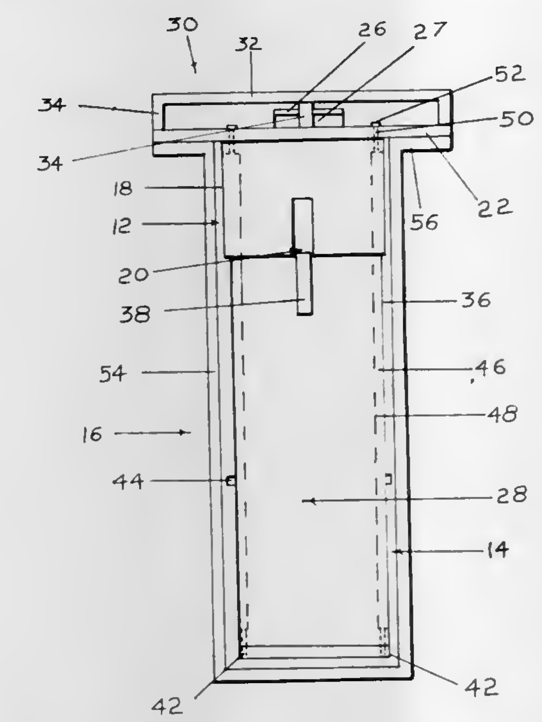

hollow elements are in said retracted position and said discharge doors are moved from said discharge position to said closed position when said substantially hollow first and second element are moved from said retracted position to said extended position.

4,065,052

DUAL ACTION CONTROL MECHANISM

Michael R. Ridenour, Fremont, Ind., assignor to Evans Products Company, Portland, Oreg.

Filed Nov. 4, 1976, Ser. No. 738,836

Int. Cl.² G05D *23/02*

U.S. Cl. 236—86 **3 Claims**

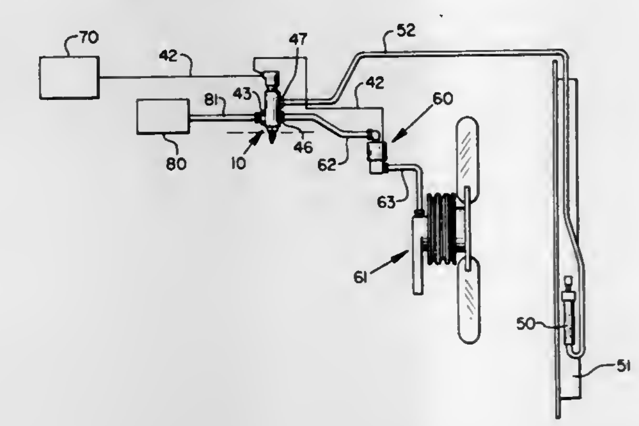

1. A dual action control mechanism for supplying fluid under pressure to a first and a second fluid actuatable device comprising:

a. a valve body having an inner end and an outer end;

b. a valve chamber located within said valve body;

c. an opening in said valve body for communicating a ource of fluid under pressure with said valve chamber;

d. an exhaust chamber located at the outer end of said valve body;

e. a connecting passageway communicating the valve chamber with the exhaust chamber;

f. a reciprocal valve rod located within said valve chamber, which said valve rod is reciprocally movable from a first position adjacent the inner end of said valve chamber to a second position removed from said inner end, a portion of said valve rod extending into said connecting passageway and having a passageway therein communicating said valve chamber with said connecting passageway in the first position of said valve rod;

g. a thermal sensor located at the inner end of said valve body, said thermal sensor having a push pin extending into the valve chamber and into contact with the inner end of said valve rod, said valve rod being in its first position when said push pin is unextended and in its second position when said push pin is fully extended;

h. a housing member located at the outer end of said valve body, said housing member having a bore communicating with said exhaust chamber, a reciprocal needle valve located and movable within said bore, said needle valve having a conical head portion at its inner end extending through said exhaust chamber into sealing relationship with the connecting passageway at the first position of said valve rod and into sealing relationship with the passageway of that portion of the valve rod extending into said connecting passageway at said second position of said valve rod, the bore of said housing member communicating with the atmosphere through a peripherally located exhaust port;

i. a first fluid passageway for communicating the valve chamber with a first fluid actuatable device via a solenoid valve;

j. a second fluid passageway for communicating the connecting passageway with a second fluid actuatable device; and

k. a limit switch located at the outer end of said housing member having an actuating pin extending into the bore of the housing member in a position such that at the second position of said valve rod the outer end of said needle valve is in actuating contact with said actuating pin, said limit switch being connected to said solenoid valve for controlling the flow of fluid through said first fluid passageway to said first fluid actuatable device.

4,065,053

LOW COST SOLAR ENERGY COLLECTION SYSTEM

James C. Fletcher, Administrator of the National Aeronautics and Space Administration, with respect to an invention of; Charles G. Miller, Pasadena, and James B. Stephens, La Crescenta, both of Calif.

Filed July 24, 1975, Ser. No. 598,969

Int. Cl.² F24J *3/02*

U.S. Cl. 237—1 A **17 Claims**

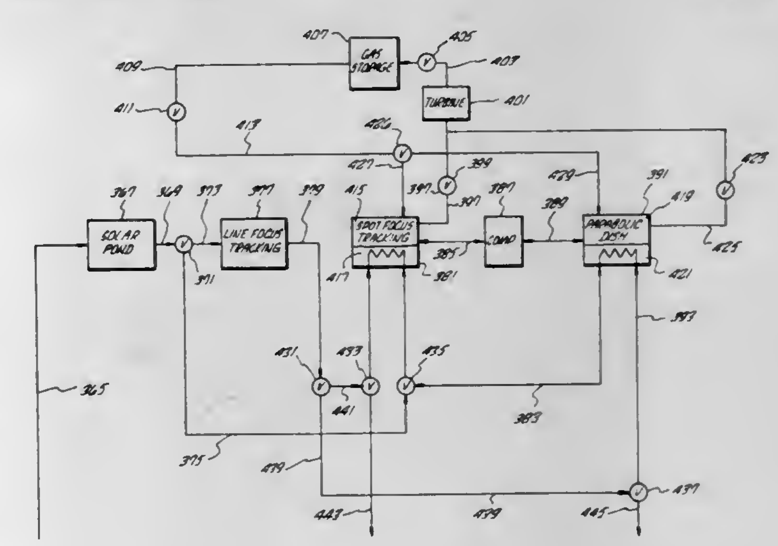

1. A solar energy collection system for producing superheated water, having a plurality of solar energy collection stages, each stage adapted to be most efficient within its temperature range, said system comprising:

a first stage, including a solar pond, for raising the temperature of water from ambient to its predetermined efficiency limit;

a second stage, receiving the water from said first stage and raising its temperature, said second stage including a line-focusing, sun-tracking collection system having at least one combination of a linear primary reflector, a linear

absorber carrying the water therethrough, and a line-imaging secondary reflector for concentrating the energy rays reflected by the primary reflector into a line on said target; and

a third stage receiving the water from said second stage and raising its temperature, said third stage including a spot-focusing, sun-tracking collection system having at least one combination of a linear primary reflector, a linear absorber carrying the water therethrough, and a plurality of spot-imaging secondary reflectors for concentrating the energy rays reflected by the primary reflector into spots on said linear absorber.

4,065,054
CIRCULATING WATER HEATER
Hans Meier, Remscheid, Germany, assignor to Joh. Vaillant KG, Remscheid, Germany
Filed June 3, 1976, Ser. No. 692,521
Int. Cl.² F24D *3/08*
U.S. Cl. 237—8 R **1 Claim**

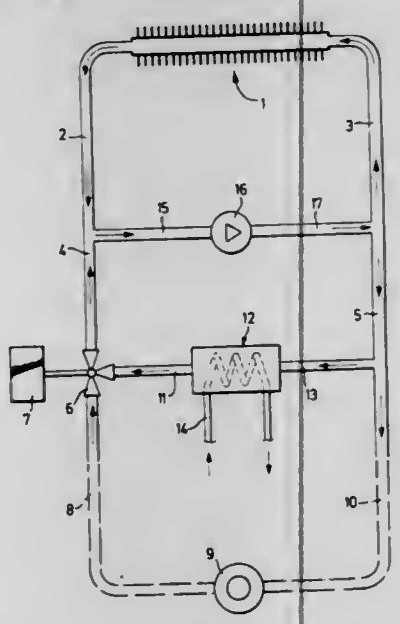

1. A circulating water heater comprising a water heater, a first supply flow line having a first end connected to said water heater and a second end spaced therefrom for conducting flow from said water heater, a first return flow line having a first end connected to said water heater and a second end spaced therefrom for returning flow to said water heater, a pipe circuit interconnecting the second ends of said first supply flow line and said first return flow line and having a first end connected to said first supply flow line and a second end connected to said first return flow line, a short-circuit line having a first end and a second end with the first end thereof connecting the junction of the second end of said first supply flow line and the first end of said pipe circuit and the second end thereof connecting the junction of the second end of said first return flow line and the second end of said pipe circuit for conveying flow of water from the first end to the second end thereof, a domestic water heater located in said pipe circuit, said pipe circuit comprising a domestic water return flow line having a first end and a second end with said first end connected to said domestic water heater, a selectively adjustable change-over valve connected to the second end of said domestic water return flow line, a second return flow line having a first end and a second end with the first end thereof connected to said change-over valve for receiving flow from said domestic water return flow line and with the second end thereof connected to the second end of said first supply flow line and to the first end of said by-pass line, a domestic water supply flow line having a first end and a second end, the first end thereof connected tosaid domestic water heater, a second supply flow line having a first end and a second end with the first end thereof connected to the second end of said domestic water supply flow line and the second end thereof connected to the second end of said first return flow line and to the second end of said short-circuit line, wherein the improvement comprises a pump located in said short-circuit line between the first and second ends thereof, at least one heat exchanger a third return flow line having a first end and a second end with the first end thereof connected to said heat exchanger and the second end thereof connected to said change-over valve, and a third supply flow line having a first end and a second end with the first end thereof connected to said heat exchanger and the second end thereof connected to the second end of said domestic water supply flow line and to the first end of said second supply flow line whereby in the cold condition with said change-over valve closed preventing flow from said domestic water return flow line and from said third return flow line into said second return flow line, flow from said water heater can be circulated through said first supply flow line, said short circuit line and said first return flow line back into said water heater and when the point of condensation temperature is exceeded, said change-over valve can be opened for connecting at least one of said domestic water return flow line and said third return flow line to said second return flow line thereby increasing the flow through said short-circuit line and through said pump therein.

4,065,055
COMPLETE SYSTEM FOR A HOME AIR HEATING AND COOLING, HOT AND COLD WATER, AND ELECTRIC POWER
Michael J. De Cosimo, c/o George Spector, 3615 Woolworth Bldg, 233 Broadway, New York, N.Y. 10007
Filed Jan. 14, 1976, Ser. No. 649,132
Int. Cl.² B60H *1/02*
U.S. Cl. 237—12.1 **1 Claim**

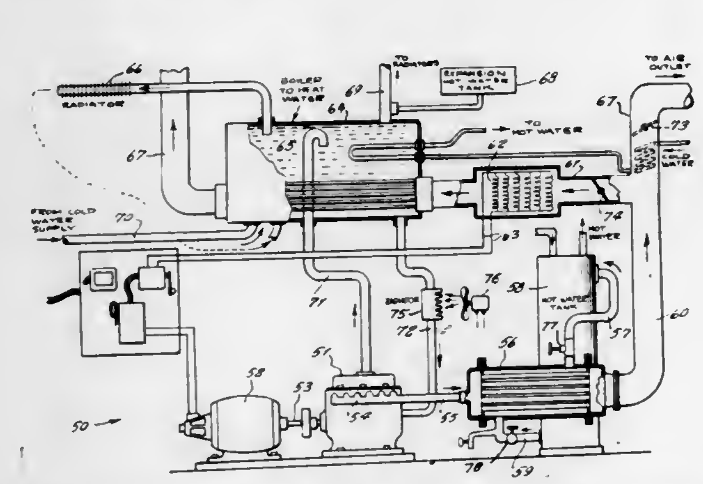

1. A system for providing heat and electricity for a building, comprising an internal combustion engine driving the input shaft of an electric generator, wherein said exhaust manifold of said engine is in communication with the intake of a heat exchanger, including heat exchanging tubes mounted in said heat exchanger, in further combination with water supply means in fluid communication with said exchanger, further including an exhaust gas outlet from said heat exchanger in communication with a second heat exchanger separate from said first heat exchanger, said second heat exchanger being in communication with heating means for the building whereby heat from the exhaust gases is transferred to the heating means for the building via the second said heat exchanger in further combination with ducts from the engine cooling system in communication with said second heat exchanger whereby additional heat generated by the engine is transferred to the second said heat exchanger thereby augmenting the heat transferred to the said means for heating the buildings further including electric coils heating the exhaust gas between the said first and second said heat exchangers whereby the said coils are provided with current from said generator.

4,065,056
METHOD AND DEVICE FOR THERMALLY CONTROLLING A UTILIZATION UNIT FED BY A CONDENSABLE VAPOR DISTRIBUTING SYSTEM
Pierre Eugene Regamey, 33 Plein Soleil, 42580 L'Etrat, France
Filed Dec. 15, 1975, Ser. No. 641,016
Claims priority, application France, Dec. 16, 1974, 74.41374
Int. Cl.² F24D *1/08*
U.S. Cl. 237—67 **16 Claims**

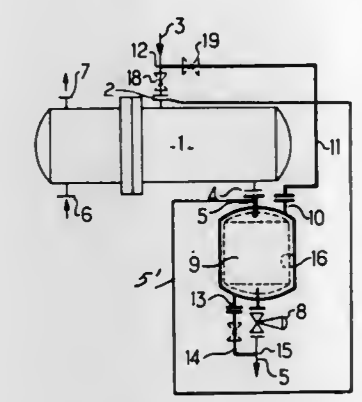

1. A method for thermally controlling a utilization apparatus heated with condensable steam, mounted in a live steam distribution plant comprising a condensate drain line system for dry gravity return of the condensates which also contains live steam, said method consisting in a selectively variable storage of the condensates through modulated retention within said utilization apparatus, wherein the improvement comprises the step of reheating said condensates and permitting said condensates to contact the steam after reheating only.

4,065,057
APPARATUS FOR SPRAYING HEAT RESPONSIVE MATERIALS
George J. Durmann, 97 Intervale Ave., Farmingdale, N.Y. 11735
Filed July 1, 1976, Ser. No. 701,592
Int. Cl.² B05B *7/16*
U.S. Cl. 239—79 **19 Claims**

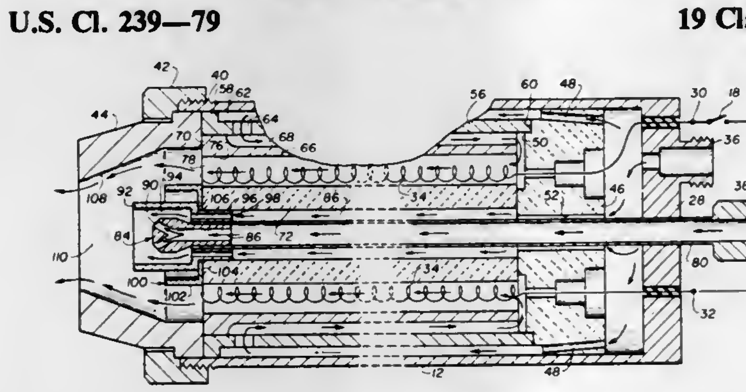

1. Apparatus for spraying heat responsive materials, said apparatus comprising:

a housing having inlet means for a compressed fluid comprising air or inert gas and for the material to be sprayed, and outlet means for a mixture thereof;

a core contained in said housing, said core including heat generating means adapted to be connected to a source of electrical energy, said heat generating means being arranged to heat a first portion of the compressed air or inert gas prior to the discharge thereof;

compressed air or inert gas passageway means in said housing and in communication with said inlet means and said outlet means thereof;

nozzle means in communication with said inlet means for the material to be sprayed; and

baffle means surrounding said nozzle means for preventing mixing of the heated, compressed air or inert gas and the material to be sprayed until the heated, compressed air or inert gas and the material to be sprayed are downstream of said nozzle means.

4,065,058
FUEL INJECTION NOZZLE WITH COMPRESSIBLE VALVE
Richard S. Knape, and Joseph Lukas, both of Grand Rapids, Mich., assignors to General Motors Corporation, Detroit, Mich.
Filed May 21, 1976, Ser. No. 688,694
Int. Cl.² B05B *1/30*
U.S. Cl. 239—88 **5 Claims**

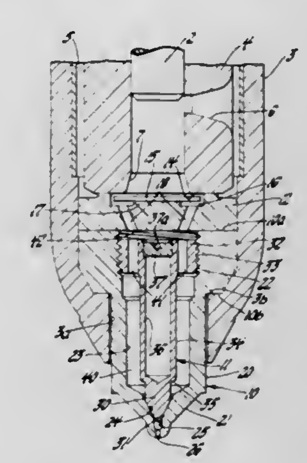

1. A nozzle body with compressible valve assembly for use in a fuel injector nozzle assembly, said nozzle body with compressible valve assembly including a nozzle body having an inlet body portion at one end and a spray tip at its opposite end, said spray tip having fuel outlet means therein, said nozzle body further having a bore extending from said inlet end providing an annular valve seat in said spray tip in fluid communication with said fuel outlet means therein and, a compressible valve positioned in said nozzle body with said compressible valve having a reduced diameter valve head at one end thereof with an enlarged diameter stem extending therefrom, said stem including a tubular compressible stem portion connected to said valve head by an annular radial shoulder, said stem at its opposite end having an enlarged diameter stem end adjustably fixed to said nozzle body against axial movement in either direction and in position in said bore so that said valve head is in loaded abutment against said valve seat, said compressible valve forming with the internal wall provided by said bore in said nozzle body an annular fuel chamber, longitudinally extending fuel passage means in said enlarged stem end in communication at one end with said annular fuel chamber and connectable at its other end with an intermittently supplied source of fuel at high pressure, said tubular compressible stem portion being of substantially uniform diameter and having an annular wall of predetermined thickness for a predetermined longitudinal length whereby when fuel at a predetermined high fuel pressure is in said annular fuel chamber, said wall of said tubular compressible stem portion will be compressed radially so as to effect an axial reduction of the normal length of said compressible valve whereby said valve head is moved to an open position relative to said valve seat and when fuel at a reduced pressure below a predetermined low pressure is in said annular fuel chamber, said tubular compressible stem portion of said compressible valve will expand back to its normal longitudinal length whereby said valve head is positioned in abutment against said valve seat.

4,065,059
REPAIR GUN FOR COKE OVENS
Richard Jablin, P.O. Box 514, Winchester, Va. 22601
Filed Sept. 7, 1976, Ser. No. 721,095
Int. Cl.² B05B *13/06;* **B05C** *7/02*
U.S. Cl. 239—184 **6 Claims**

1. A repair gun for spraying repair material into cracks in the walls of a coke oven comprising:

a. A sight tube which is supported at one end by a structure which has power-assisted devices to permit an operator to tilt and rotate said sight tube.

b. A pipe internal to and axially aligned with said sight tube

and terminating in a nozzle at the end of said tube such that refractory repair material may be sprayed through said pipe and nozzle into cracks of the oven walls.

c. A tank for containing the refractory repair material, said tank being equipped for delivering said material through a hose to said internal pipe.

d. A telescope mounted on the operator-end of said sight tube and directed axially along said tube to an angled mirror and through a sight port at the end of said tube such that the operator can observe the deposition of repair material into the cracks of the oven walls.

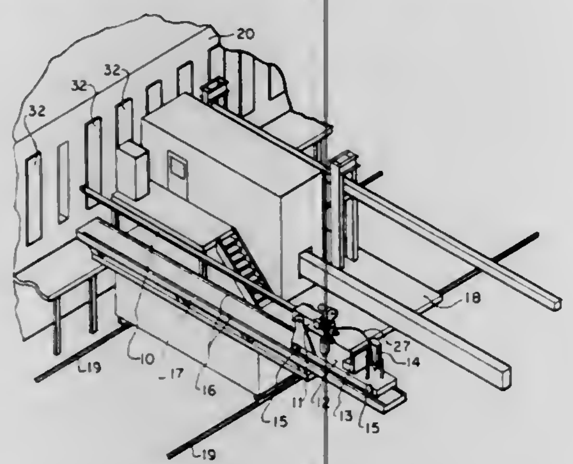

e. A fan for blowing air through said sight tube to cool said tube, said air leaving at high velocity through said sight port such that particles of refractory repair material are prevented from entering said sight port and clouding said mirror.

f. A power-operated trolley upon which said sight tube, said tank and an operator's control station are mounted such that said trolley may be moved to or away from said oven and said operator may control all motions of said tube and the flow of refractory repair material and, at the same time, observe through said telescope.

g. A bridge with rails for supporting said trolley.

4,065,060
METAL FLAKE PRODUCTION
A. David Booz, New Kensington, Pa., assignor to Aluminum Company of America, Pittsburgh, Pa.
Filed Oct. 6, 1976, Ser. No. 730,181
Int. Cl.² B02C *23/10*
U.S. Cl. 241—16 **17 Claims**

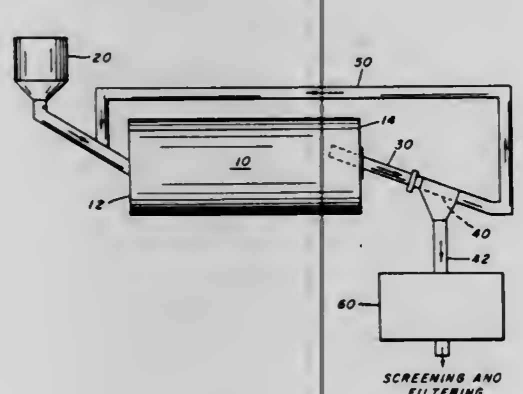

1. A method of forming metal flake from metal particles comprising:

a. charging a ball mill with milling media and with materials to provide a mix therein of said materials comprising approximately 35 to 65 wt.% metal particles, 0.4 to 7 wt.% lubricant, the remainder solvent;
b. operating the mill to form said metal flake;
c. removing a portion of the metal flake, liquid and milling material from the mill at a rate commensurate with said charging thereto; and
d. separating the milling material from the liquid and metal flake by washing the milling material substantially free of said metal flake.

4,065,061
BALL MILL
Jean-Paul Bombled, 89 bis, rue des Fermettes, 78420 Carrieres sur Seine, France
Filed Dec. 21, 1976, Ser. No. 757,225
Claims priority, application France, Jan. 8, 1976, 76.00309
Int. Cl.² B02C *23/08*
U.S. Cl. 241—81 **4 Claims**

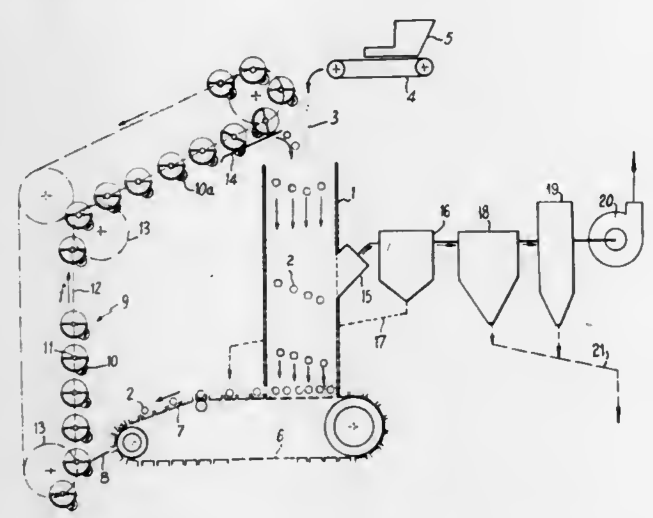

1. A ball crusher comprising a stationary substantially vertical tube, means for feeding the material to be crushed into the upper end of said tube together with crusher balls to drop same into the tube, means for removing said balls and the crushed material out of the lower end of the tube, means for raising the balls thus removed together with any insufficiently crushed material up to the upper end of the tube to return same into the latter and means for separating at least part of the crushed material from the balls at a predetermined point of its travel inside the tube and removing and raising means to discharge said crushed material.

4,065,062
STACK FEEDER
Lorne C. Heslop, Guelph, Canada, assignor to McKee Bros. Limited, Elmira, Canada
Continuation-in-part of Ser. No. 571,833, April 25, 1975, abandoned. This application Apr. 1, 1976, Ser. No. 672,820
Int. Cl.² B02C *13/04*
U.S. Cl. 241—101.7 **7 Claims**

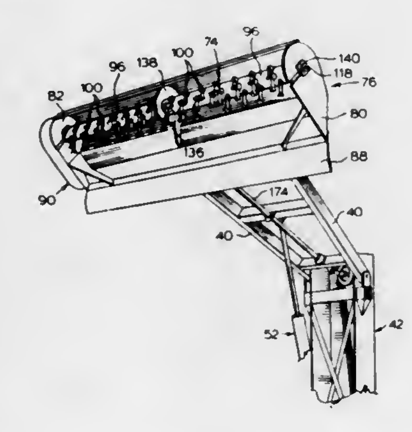

1. A stack feeder for use in association with a stack mover arranged to advance a haystack in a direction longitudinally of the stack feeder, the stack feeder comprising:
a base frame;
a flail assembly located above the base frame and positioned transversely with respect to said longitudinal direction;
means coupling the flail assembly to the base frame for pivotal movement with respect to the base frame about a horizontal axis so that the flail assembly can be moved up and down along an arcuate path above the frame;
means for moving the flail assembly along said arcuate path;
the flail assembly including: a rotary flail which comprises: an elongate cylindrical support rotatable about a horizontal axis and formed in two cylindrical sections arranged co-axially with respect to one another; axle means rigidly coupling the inner ends of said sections; two stub axles projecting from the respective outer ends of the sections; bearing means on said axle means; a thin plate supporting said bearing means and disposed between the inner ends of said cylindrical sections of the flail support; a plurality of knives carried by said support sections for action on a haystack in use, each said knife being coupled to the associated support section for free pivotal movement about an axis extending parallel to said horizontal axis of rotation of the support, whereby the knives can swing outwardly relative to the support when the flail is in use; a fixed blade assembly on each of said cylindrical support sections, each said fixed blade assembly being positioned adjacent said thin support plate for the bearing means and including a plate secured to the associated support section and positioned in a plane transverse to the longitudinal axis of the support; a plurality of fixed knives attached to and projecting outwardly of said plate, each said knife having an outer end and being positioned so that said end rotates closely adjacent to said thin support plate for the bearing means between the flail sections when the flail is in use; and a hood which extends longitudinally of the flail;
means for rotating the flail at a speed in the range 1,600 to 2,600 r.p.m.; and,
conveyor means supported on the base frame below the flail assembly and extending transversely of the base frame to a discharge location laterally of said frame;
whereby, in use, the leading end portion of a haystack advanced to a position in said arcuate path of the flail assembly is shredded and fluffed up by the action of the rotary flail upon movement of the flail assembly along said path, and the resulting hay is directed downwardly onto the conveyor means for discharge at said discharge location.

4,065,063
IMPACT CRUSHER
Louis W. Johnson, Eugene, Oreg., assignor to El-Jay, Inc., Eugene, Oreg.
Filed July 6, 1976, Ser. No. 702,394
Int. Cl.² B02C *13/09*
U.S. Cl. 241—275 **16 Claims**

1. In an impact crusher:
a rotatable distributor table,
a plurality of impeller shoes mounted in spaced positions around the distributor table,
and a plurality of segmental wear plates forming portions of an annulus and extending around the distributor table between the impeller shoes,
said table having a groove therearound,

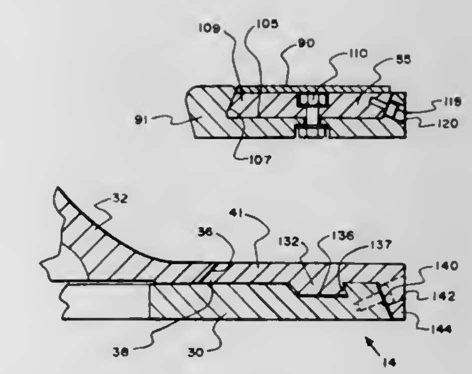

each wear plate having a rib projecting into said groove for retaining purposes.

4,065,064
LINERS FOR CRUSHER
James Anthony, Roanoke, Va., assignor to Fuller Company, Catasauqua, Pa.
Filed Oct. 19, 1976, Ser. No. 733,963
Int. Cl.² B02C *2/00, 17/22*
U.S. Cl. 241—299 **4 Claims**

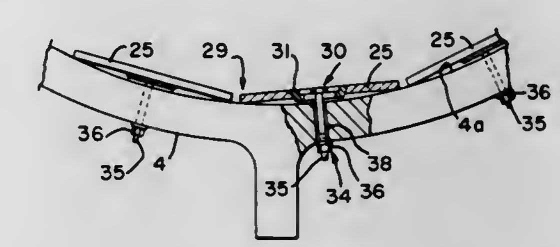

1. A wear resistant lining for the bottom shell of a crusher wherein the inside of the bottom shell is a hollow generally truncated cone comprising:
a plurality of wear resistant plates each mounted on the inside of the bottom shell of the crusher adjacent to each other, to thereby encircled the inside of the bottom shell;
each of said plates being substantially flat and having at least one hole therethrough;
a plurality of fastener means, each operatively associated with one of the holes in said plates and the bottom shell of the crusher for securing said plate to the inside of the bottom shell; and
a plurality of universal fittings, each adapted to be positioned in one of the holes in said plates;
each of said fastener means being operatively associated with one of the universal fittings for securing its associated fitting in its respective hole in said plate.

4,065,065
METHOD AND APPARATUS FOR COLLECTING STRAND MATERIAL
John Kallenborn, Murrysville, Pa., assignor to PPG Industries, Inc., Pittsburgh, Pa.
Continuation of Ser. No. 677,359, April 15, 1976, abandoned. This application Jan. 7, 1977, Ser. No. 757,722
Int. Cl.² B65H *54/10*
U.S. Cl. 242—18 G **20 Claims**

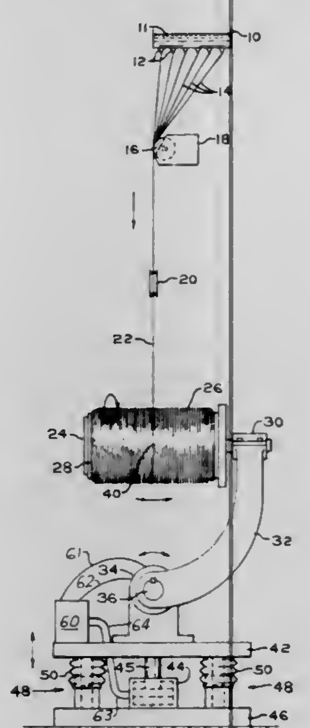

1. In a method of forming glass strand comprising attenuating filaments from molten glass through bushing tips in a bushing, gathering the filaments into strand in a gathering means and collecting the strand on a rotating surface, the improvement comprising oscillating the mid point of the rotating surface through an included angle from the horizontal, oscillating the rotating surface in the vertical direction and timing said vertical oscillations in response to said oscillations of the mid point of the rotating surface through the included angle from the horizontal to maintain a constant length of strand between the gathering means and the rotating surface.

4,065,066
CABLE HANDLING
Alan M. Swett, Milton, and Roderick D. Swift, Belmont, both of Mass., assignors to The United States of America as represented by the Secretary of the Department of Health, Education and Welfare, Washington, D.C.
Filed Sept. 30, 1976, Ser. No. 728,312
Int. Cl.² B65H *51/20*
U.S. Cl. 242—47.12 **6 Claims**

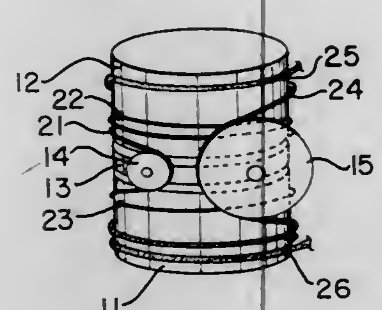

1. Cable handling apparatus comprising,
first and second drum means axially displaced along and relatively rotatable about a common axis for carrying flexible cables thereon,
pulley carrier means separating said first and second drum means and relatively rotatable about said common axis with respect to said first and second drum means for carrying pulley means,
first and second pulley means mounted on said pulley carrier means for guiding flexible cables along first and second arcuate paths respectively of different lengths so that said pulley carrier means moves about said common axis as said pulleys guide cables over said arcuate paths,
a first flexible cable having first and second points secured to said first and second drum means respectively and a standing part therebetween guidable over said first arcuate path by said first pulley means,
and a second flexible cable having first and second points connected to said first and second drum means respectively and a standing part therebetween guidable over said second arcuate path by said second pulley means.

4,065,067
SYSTEM FOR AUTOMATIC COUPLING OR SPLICING OF BOBBINS, SUBMITTING A STRIP TO A CONTINUOUS FEED PROCESS FOR PAPER MANUFACTURING MACHINES
D. Manuel Torres Martinez, Sancho El Fuerte 21-8°C, Pamplona, Spain
Filed Sept. 20, 1976, Ser. No. 724,992
Claims priority, application Spain, Sept. 30, 1975, 441391
Int. Cl.² B65H *19/18*
U.S. Cl. 242—58.1 **10 Claims**

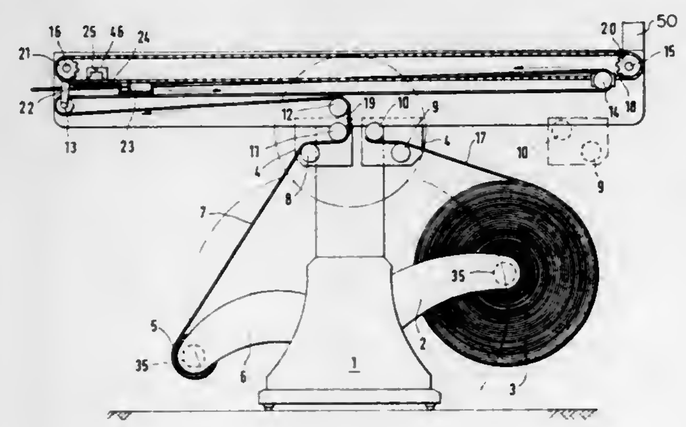

1. Apparatus for continuously supplying paper in sequence without interruption from a plurality of supply rolls comprising:
a. a support frame;
b. said support frame having first and second support means for supporting first and second supply rolls of paper;
c. first and second means for retarding the rotation of said first and second supply rolls of paper respectively;
d. one of said supply rolls supplying paper, the other supply roll being available to begin supplying paper upon the at least partial exhaustion of the paper on said one supply roll;
e. first means for holding the leading edge of paper from said other supply roll adjacent to paper being supplied from said one supply roll;
f. a first roller;
g. said paper being supplied passing over said first roller;
h. said first roller being supported at its first and second ends by first and second arms;
i. said first and second arms being independently pivoted whereby said first roller is free to move in rotation about a common axis and to skew;
j. first and second pressure cylinders having plungers therein connected respectively to said first and second arms;
k. said first and second pressure cylinders being connected to a common source of pressure;
l. at least a second roller;
m. said paper being supplied passing over said second roller;
n. means for controlling translation of said second roller toward said first roller;
o. second means for holding the paper being supplied;
p. means for pressing the leading edge of the paper from said other supply roll against said paper being supplied;
q. means for severing the paper being supplied while it is being held by said second means for holding whereby the supplying of paper is transferred to said other supply roll; and
r. means for returning said second roller to its initial spaced position from said first roller.

4,065,068
ADDING MACHINE TAPE REVERSING REWINDER
John William Treadwell, 8617 Chestnut Oak Road, Baltimore, Md. 21234
Filed Oct. 6, 1976, Ser. No. 730,080
Int. Cl.² B65H *17/02, 23/26;* **B41J** *29/00*
U.S. Cl. 242—67.1 R **5 Claims**

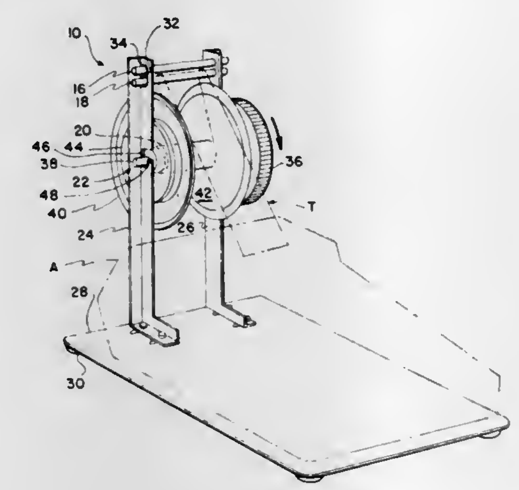

1. A reversing rewinder for use with adding machines or the like employing tapes, comprising: horizontal guide means comprising a pair of leveller bars, a spindle assembly having a detachable roll for rewinding and storing tape, the spindle assembly including an axle with the roll slidably mounted thereon and a side plate slidably mounted on the axle at each end of the roll, means for frictionally braking said spindle assembly, a pedestal having upright means for detachably holding the leveller bars and the spindle assembly in parallel spaced relation below the leveller bars, the upright means including a pair of laterally spaced uprights with means defining in each upright a respective aperture, the apertures proportioned for holding the ends of the leveller bars, means defining in each upright a lateral slot with a lip at the lower outboard portion thereof for holding the ends of the axle of the spindle; a base extending forwardly from the pedestal for receiving said an adding machine with a tape having a first side and a reverse side, with the tape first side upward and the tape extending rearwardly and upwardly from said an adding machine through the horizontal guide structure and then downwardly and around the front of the spindle assembly; a knob for rotating the spindle assembly and storing the tape upon the roll with the reverse side of the tape outward, and the reversing rewinder being provided with means for preventing accidental detachment of the spindle assembly in that the side plates are circular and the combined dimension of a side plate radius and the radius of the axle of the spindle exceeds the dimension from the slot lip to the leveller bars and prevents spindle disengagement from said upwardly opening slots.

4,065,069
EMERGENCY LOCKING RETRACTOR
Per Olaf Weman, Haslah, Germany, assignor to Sigmatex, A.G., Basel, Switzerland
Continuation-in-part of Ser. No. 342,236, March 16, 1973, abandoned. This application Oct. 1, 1973, Ser. No. 402,448
Int. Cl.² A62B *35/02;* **B65H** *75/48*
U.S. Cl. 242—107.4 A **10 Claims**

1. A seat belt retractor comprising: a rotatable reel shaft to which one end of a seat belt is fixed; a rotatable circular ratchet fixed to the reel shaft and rotatable therewith; a locking pawl movable between a first position wherein it allows rotation of the reel shaft in a belt extending direction and a second position wherein it engages said ratchet to prevent rotation of the reel shaft in the belt extending direction; and a first mechanism for locking said reel shaft in response to rotational acceleration of said reel shaft, said first mechanism comprising: a cylindrical section of said reel shaft, said cylindrical section having a face; a flywheel rotatably supported on the reel shaft for rotation thereon, said flywheel having a surface disposed adjacent to said face of said cylindrical section of said reel shaft; a spring supported on said face of said cylindrical section, said spring disposed between said cylindrical section and the flywheel

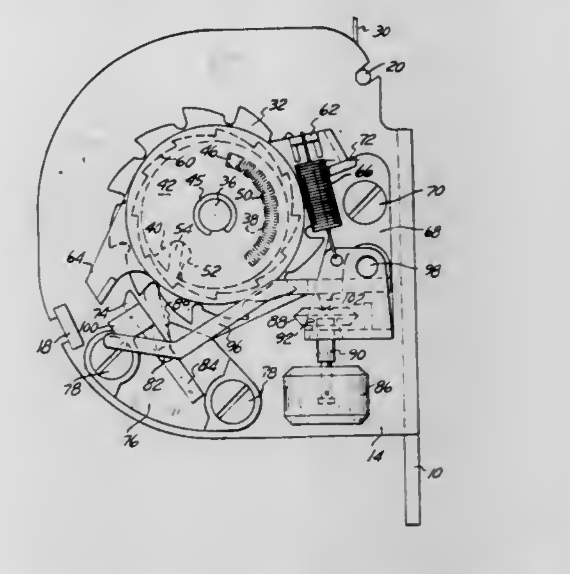

surface, means projecting from said flywheel to said spring so as to urge the flywheel to rotate with the reel shaft when the reel shaft rotates in such a direction as to extend the belt; and actuator means including a locking dog separate from said locking pawl and adapted to be coupled to the reel shaft and to the flywheel and operative to urge said locking pawl into its second position upon the occurance of rotational acceleration of the reel shaft in the belt extending direction, whereby locking forces to prevent rotation of the reel shaft are exerted on said locking pawl, but not on said separate locking dog, thereby enabling said locking dog to be relatively light in weight in comparison to said locking pawl to avoid unbalancing said flywheel.

4,065,070
DUAL SPOOL RETRACTOR
Regis V. Pilarski, Utica, and Gerald A. Yates, Milford, both of Mich., assignors to The Firestone Tire & Rubber Company, Akron, Ohio
Filed Mar. 18, 1976, Ser. No. 668,070
Int. Cl.² A62B *35/02;* **B65H** *75/48*
U.S. Cl. 242—107.4 A **4 Claims**

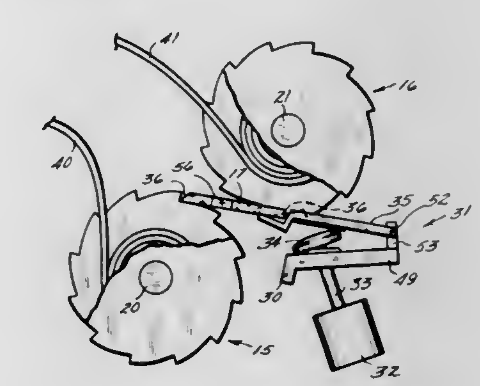

1. In a multi-spool structure for safety belts and the like, the combination comprising:
a mounting frame;
a pair of spaced-apart spools journalled on said frame, said

spools having webbing retractable thereon and extendable therefrom and the axes of said spools being in spaced-apart parallel relation;

a retractor spring on each of said spools and connected to said frame urging retraction of said webbing onto said spools;

ratchet flanges on said spools confining said webbing therebetween and said ratchet flanges on one of said spools being in planes parallel with the corresponding ratchet flanges of the other of said spools;

a pawl tiltable in said frame between said spools on an axis offset and parallel to the axes of said spools and intermediate said spools, said pawl having plural oppositely facing dogs and said dogs in blocking registry with said ratchet flanges on both of said spools and upon tilting said dogs in blocking engagement with said ratchet flanges of both of said spools; and

movable means supported by said frame and operably positioned to selectively displace said pawl.

4,065,071
SAFETY BELT RETRACTOR
Gote Eskil Yngve Holmberg, Postlada 2010, S-330 20 Anderstorp, Sweden
Filed Aug. 31, 1976, Ser. No. 719,477
Claims priority, application Sweden, Sept. 2, 1975, 7509720
Int. Cl.^{2} A62B *35/02;* B65H *75/48*
U.S. Cl. 242—107.4 A **12 Claims**

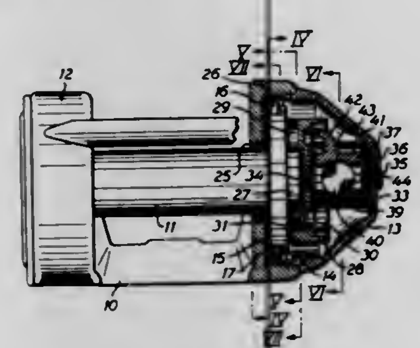

1. A safety belt retractor comprising a frame, a spindle rotatably mounted in said frame; means biasing said spindle in a belt-retracting direction; a non-circular portion formed by said spindle; a first locking mechanism resiliently connected with the spindle for rotation therewith and for displacement thereby between nonrotating locking and rotatable non-locking positions; and including a support; two opposed radially displaceable locking members mounted on the support; bias means biasing the locking members to resiliently engage said non-circular portion of the spindle at slow rotational movements of the spindle; a stationary locking element on the frame, said locking members being displaced by the spindle into engagement with said stationary locking element by a rapid rotational movement of the spindle exceeding the biasing force of the bias means, whereby the non-circular portion cams the locking members into nonrotating locking position with the stationary locking element for locking the spindle against rotational movement; a second locking mechanism cooperating with the first locking mechanism to actuate the first in response to at least one of the parameters inclination and deceleration of the retractor; the second locking mechanism including a toothed rim and a resilient drive connection between the support and the toothed rim; and further including a locking means responsive to inclination or deceleration of the retractor for engaging said toothed rim to thereby prevent said toothed rim from rotating with the spindle and thereby actuate the first locking mechanism.

4,065,072
SEAT BELT RETRACTOR WITH WINDING PREVENTION MECHANISM
Joseph J. Magyar, Rochester, Mich., assignor to General Motors Corporation, Detroit, Mich.
Filed July 30, 1976, Ser. No. 710,250
Int. Cl.^{2} A62B *35/00;* B65H *75/48*
U.S. Cl. 242—107.7 **3 Claims**

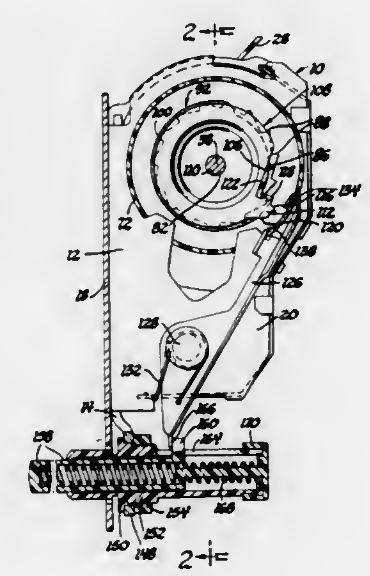

1. A vehicle occupant restraint belt retractor comprising:

a rotatably mounted belt reel having a restraint belt attached thereto for winding and unwinding upon belt reel rotation;

a windup spring biasing the belt reel in the belt winding direction, the windup spring providing a winding effort on the belt reel to tension the belt about the occupant when the belt is unwound from the belt reel to an occupant restraining position and provide a winding effort for rewinding the belt to the stored position on the belt reel;

a detent mechanism operatively associated with the reel and normally permitting belt winding reel rotation by the windup spring and being operable to block belt winding reel rotation by the winding spring to hold the belt in a slackened restraining position about the occupant without exerting tension on the occupant;

control means having a control surface coacting with the detent mechanism for controlling operation of the detent mechanism to the blocking position upon operator induced unwinding reel rotation subsequent to the belt being unwound and rewound to a taut restraining position about the occupant, the coaction of the detent mechanism with the control means imparting a frictional force to the reel which impedes belt winding reel rotation and windup of the belt by the effort of the winding spring;

and means responsive to operator actuation to selectively terminate the coaction between the control means and detent mechanism during full windup of the belt to thereby terminate the frictional impediment to belt windup spring whereby the necessary winding effort of the winding spring is minimized.

4,065,073
CREEL CARRIAGE
Joachim Rohner, Monchen-Gladbach, Germany, assignor to W. Schlafhorst & Co., Monchen-Gladbach, Germany
Filed Aug. 2, 1976, Ser. No. 711,080
Claims priority, application Germany, Jan. 8, 1975, 2534507
Int. Cl.^{2} B65H *49/02;* D02H *1/00;* D03J *5/08*
U.S. Cl. 242—131 **5 Claims**

1. In a creel carriage for warping creels, a plurality of spikes formed as hollow members for receiving textile coils thereon,

the spikes having at the tips thereof respective suction nozzles for sucking the end of a thread wound on a respective textile

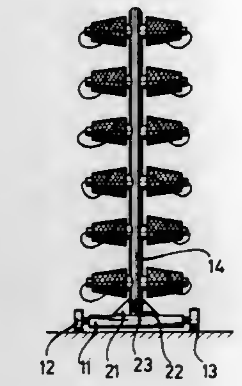

coil into the hollow spike, and means for connecting the hollow spikes to a negative pressuregenerating pneumatic device.

4,065,074
REEL SERVO CONTROL SYSTEM
David Robert Anderson, Murray; Wilbert Cleon Anderson, Salt Lake City, and Vaughn Junior Jenkins, Bountiful, all of Utah, assignors to Sperry Rand Corporation, New York, N.Y.
Filed June 2, 1976, Ser. No. 692,175
Int. Cl.^{2} 318 *6;* G11B *15/58*
U.S. Cl. 242—184 **20 Claims**

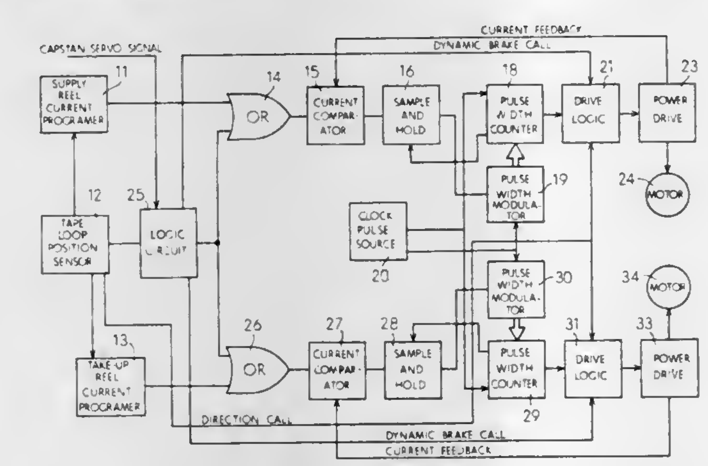

1. A tape reel servo control system for use in a tape transport system comprising in combination:

a supply reel;

a take-up reel;

a tape drive capstan;

a first vacuum loop box for receiving a tape loop between said supply reel and said capstan;

a second vacuum loop box for receiving a tape loop between said capstan and said take-up reel;

a motor responsive to drive pulses for driving each of said supply and take-up reels;

first means for controlling the acceleration of each of said motors in accordance with the position of a tape loop within its associated loop box; said first means for each of said motors, comprising:

a tape loop sensor means for providing an output indicative of the position of a tape loop within its associated loop box;

current programmer means connected to said tape loop sensor means for providing one of several discrete current levels as an output dependent on the position of said tape loop in its associated loop box;

current comparator means connected to said current programmer means;

feedback means for connecting a feedback signal from the associated motor to said current comparator means;

digital means comprising:

an up-down counter;

a hold circuit connected between said current comparator means and said up-down counter;

a pulse width counter connected to said up-down counter for receiving the counter in said up-down counter at the end of each of said drive pulses;

a clock pulse source connected to said pulse width counter;

said hold circuit causing said up-down counter to count up one or down one at the end of each motor drive pulse depending on whether the current from said current programmer means is greater or lesser than said feedback signal provided by said feedback means; and

said pulse width counter counting down to zero at the end of each motor drive pulse from the adjusted count registered therein.

4,065,075
TAPE TRANSPORT FOR A CASSETTE
Larry Wayne Holcomb, Rte. 2 Box 130-A, Warrenton, Va. 22186
Filed Apr. 14, 1976, Ser. No. 676,904
Int. Cl.^{2} G11B *23/10, 15/60*
U.S. Cl. 242—199 **6 Claims**

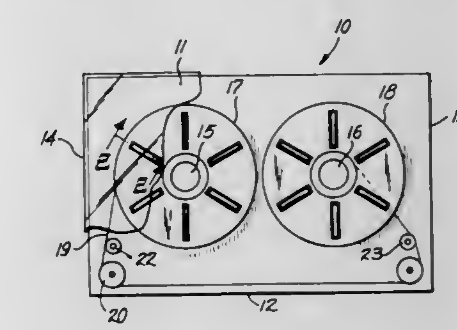

2. A tape cassette including a set of driven reversibly mounted feed and take-up reels wherein each of said reels includes recessed portions in the outer faces thereof, three or more, in multiples of three, equidistantly spaced spring actuated pin rollers located in said portions recessed and extending outwardly from said faces of said reels whereby frictional contact between the cassette and the reels is reduced during tape movement.

4,065,076
PIPELINE FOR PNEUMATIC TRANSPORTATION OF CARGOES IN CONTAINERS
Adolf Moritsovich Alexandrov, Federativny prospekt, 6, korpus 3, kv. 8; Vladimir Efimovich Aglitsky, Zatsepsky val, 6/13, kv. 61; Jury Abramovich Tsimbler, Sojuzny prospekt, 10, kv. 261; Mikhail Vladimirovich Lurie, ulitsa Veernaya, 40, korpus 3, kv. 43; Jury Arnoldovich Topolyansky, ulitsa Matveevskaya, 10, korpus 4, kv. 233; Ilya Solomonovich Kantor, Teply stan, mikroraion 8-a, korpus 10ab, kv. 98; Anatoly Petrovich Chizhikov, ulitsa Petrovka, 26, kv. 3, all of Moscow, and Dmitry Rudolfovich Gun, Komsomolskaya ulitsa, 7, kv. 29, Ljubertsy Moskovskoi oblasti, all of U.S.S.R.
Filed July 9, 1976, Ser. No. 703,838
Claims priority, application U.S.S.R., July 10, 1975, 2154918
Int. Cl.^{2} B65G *51/20*
U.S. Cl. 243—38 **5 Claims**

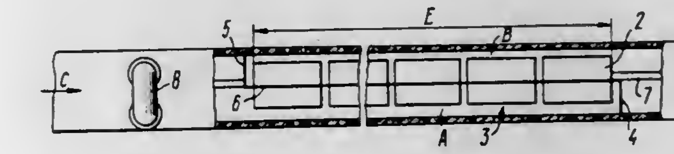

1. A pipeline for pneumatic transportation of cargoes in containers and container trains having front and rear half-seals connected by longitudinal seals which cooperate to cause the train to ride on an air cushion, said pipeline having a container breaking zone comprising a bypass pipeline extending substan-

tially transverse to the pipeline and having a gate which closes said bypass pipeline to permit the containers to pass freely through the braking zone and opens during braking of the containers wherein the bypass pipeline is mounted at the beginning of the container braking zone such that one of its ends is connected to only a lower part of the transportation pipeline below the longitudinal seals and the other one, only to an upper part of the transportation pipeline above the longitudinal seals whereby when the container passes through the braking zone and the gate of the bypass pipeline is open, pressure under and above the container is equalized and said container is braked.

4,065,077
ATTACHMENT FOR ATTACHING JET PROPULSION ENGINES TO FIXED STRUCTURE
Leslie John Brooks, Aston-on-Trent, England, assignor to Rolls-Royce Limited, London, England
Filed Apr. 25, 1977, Ser. No. 790,609
Claims priority, application United Kingdom, Apr. 30, 1976, 17642/76
Int. Cl.² B64D *27/12*
U.S. Cl. 244—54 **5 Claims**

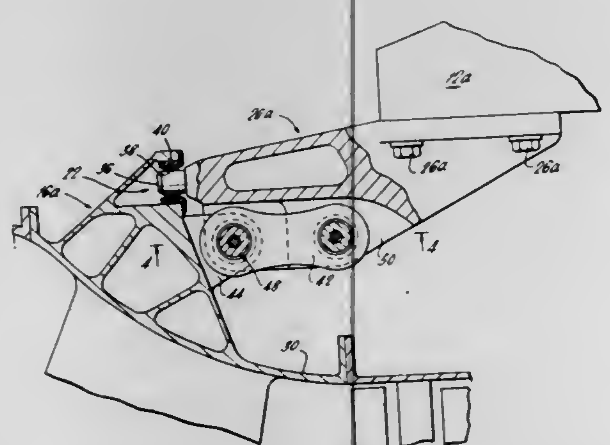

1. Jet engine attachment apparatus comprising a jet engine casing having a boss structure with a projection on its external surface, a bracket adapted for rigid fixing to vehicle structure and having a first portion adapted for close fitting engagement with said boss structure to support a jet engine's weight, a second portion adapted for remote connection with said projection for transmission of jet thrust loads to vehicle structure via the bracket and a third portion adapted to surround said projection in close spaced relationship, so that in the event of breakage of said engaging or connecting features during operation of a jet engine attached to vehicle structure by the apparatus, the jet engine will move to engage said third portion and be restrained thereby.

4,065,078
AIRCRAFT UNDERCARRIAGE SUSPENSION
Stanley Frederick Noel Jenkins, Tarporley; Roy Fairclough, Warrington, both of England; Brian Arthur Howard, Hawarden, Wales, and Frederick Miley, Widnes, England, assignors to Automotive Products, Leamington Spa, England
Filed Mar. 3, 1976, Ser. No. 663,436
Claims priority, application United Kingdom, Mar. 19, 1975, 11520/75
Int. Cl.² B64C *25/60*
U.S. Cl. 244—104 FP **21 Claims**

1. An aircraft undercarriage for supporting an aircraft structure comprising:
a ground contacting element;
a variable length liquid-filled strut operatively connected to the aircraft structure and the ground contacting element to support a proportion of the weight of the aircraft structure;
resilient means for controlling the length of said strut in dependence on the load supported thereby;
a first liquid-filled chamber in said strut from which liquid is displaced by upward movement of the ground contacting element relative to the aircraft structure;
a second liquid-filled chamber closed by a movable wall acting on said resilient means in a direction to increase the load thereon under the pressure of liquid displaced from said first chamber;
a valve block;
first and second flowpaths defined by the valve block connecting said first chamber and said second chamber;

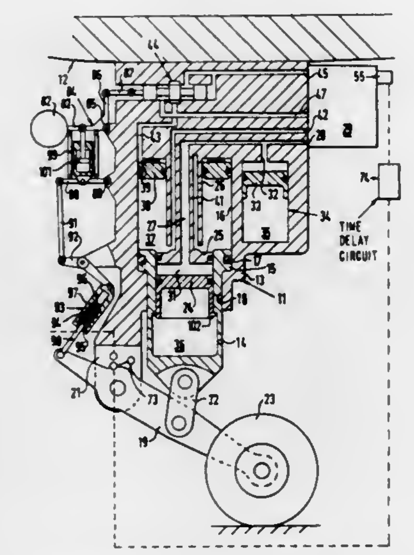

first flow restricting means in said first flow path and second flow restricting means in said second flow path to damp movement of the ground contacting element relative to the aircraft structure;
a selector valve in the valve block operable to direct the displaced liquid selectively through each of said flow paths;
and means responsive to aircraft landing to control said selector valve such that said first flow path is operative while the aircraft is landing and the second flow path is brought into operation when the aircraft is taxiing.

4,065,079
PARACHUTE REEFING DEVICE
Christopher John Winchurch, Biggleswade, England, assignor to Irvin Great Britain Limited, Letchworth, England
Filed Mar. 1, 1976, Ser. No. 662,296
Claims priority, application United Kingdom, Mar. 5, 1975, 9184/75
Int. Cl.² B64D *17/08*
U.S. Cl. 244—152 **15 Claims**

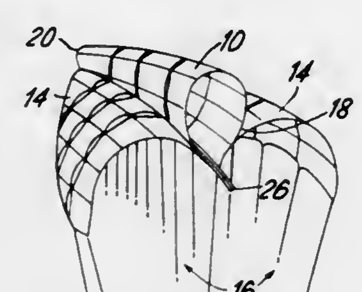

10. A parachute having a plurality of gores extending radially from a central region thereof and including smoothly releasable reefing means for securing together normally spaced parts of the canopy thereof as a reefed section in a first stable stage of canopy development wherein the canopy thereof is reduced in size by the elimination of said reefed section thereof intermediate said parts as an effective drag area of said parachute, said reefed section comprising at least one of said gores, and release means operable independently of the forces of inflation of said canopy for releasing said reefing means after said first stable stage of canopy development to allow said reefed section thereof to smoothly inflate and providing a second stable stage of canopy development wherein the canopy is fully developed.

4,065,080
KITE REEL SYSTEM
Dave R. Alison, 21102 Brighton Ave., Torrance, Calif. 90501
Filed Nov. 26, 1976, Ser. No. 745,046
Int. Cl.² B64C *31/06*
U.S. Cl. 244—155 A **10 Claims**

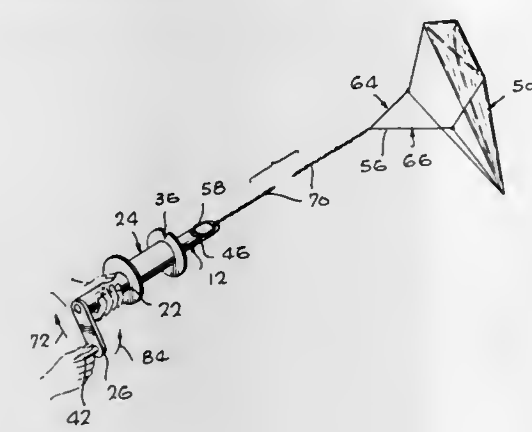

6. A method of flying a kite having the first end of each of a plurality of lengths of line attached thereto, each of the lengths of line having an opposite second end, comprising the steps of:
1. securing the second ends of the lengths of line to a member and rotating the member while the kite is in flight to twist the lengths of line together over a portion thereof;
2. winding the twisted portion of the lengths of line onto storage means;
3. again rotating the member to twist at least a portion of any remaining untwisted portion of the lengths of line together;
4. winding any twisted portion of the lengths of line produced by step 3) above mounted onto the storage means; and
5. repeating steps 3) and 4) above as necessary until the lengths of line are substantially completely twisted together and wound onto the storage means.

8. A kite reel system for use with a kite having two different lengths of line coupled thereto comprising:
an elongated structure rotatable about an axis along the length thereof;
handle means extending along a portion of the length of the elongated structure;
line storage means encircling the elongated structure at a location along the length thereof; and
means for releasably coupling two different lengths of line to the elongated structure, and including means for temporarily securing a twisted portion of the two different lengths of line at or adjacent said axis.

4,065,081
ALTERNATING CURRENT TRACK CIRCUITS
Jerry P. Huffman, Churchville; John P. LaForest, Conesus; William A. Petit, Rochester, and James A. Smith, Conesus, all of N.Y., assignors to General Signal Corporation, Rochester, N.Y.
Filed Dec. 9, 1976, Ser. No. 749,144
Int. Cl.² B61L *23/16*
U.S. Cl. 246—34 R **5 Claims**

1. Alternating current track circuits for several adjoining track sections of a stretch of railway track, each of the track circuits comprising an alternating current code transmitter and an alternating current code receiver connected to track rails at opposite ends of an associated section for detecting track occupancy, for communicating signal control rate codes through the track rails and for detecting broken down insulating rail joints which may be used to define boundaries of the several track sections, wherein improvements in the track circuit for each track section comprise;
a. circuit means including an alternating current line circuit extending along the stretch of railway track for normally communicating alternating current from the line circuit at a selected modulated rate code through rails of the associated track sections, current in any two adjoining track sections being of opposite instantaneous polarity for broken down joint protection, and
b. the circuit means comprising means responsive to the rate coded alternating current communicated through the

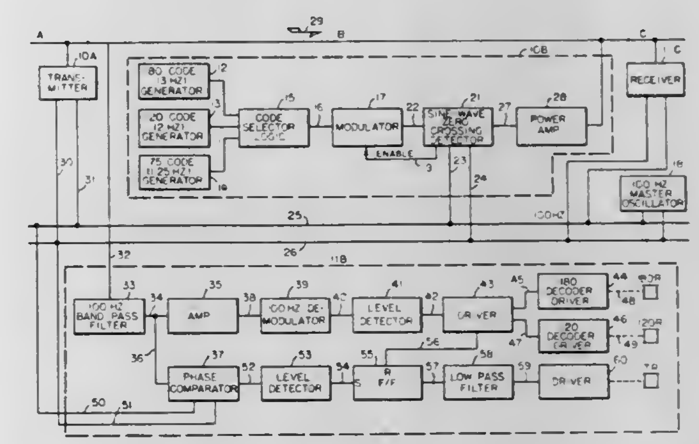

track rails for governing energization of a track relay comprising,
1. phase sensing means including comparator means for comparing the rate code modulated alternating current communicated through the track rails with a steady reference source connected to the line circuit and for generating an output rate code pattern comparable to modulations in the track rails only provided that the alternating current in the track rails is substantially 180° out-of-phase with the reference source of the associated track circuit, and 2. means including a flip-flop circuit and a low pass filter for energizing the track relay only in response to the direct current rate code pattern output of the phase sensing means.

4,065,082
ENGINE MOUNTING APPARATUS
Shingo Oota, Komatsu, Japan, assignor to Kabushiki Kaisha Komatsu Seisakusho, Tokyo, Japan
Filed Oct. 21, 1976, Ser. No. 734,633
Claims priority, application Japan, Oct. 23, 1975, 50-143644
Int. Cl.² B60G *11/18*
U.S. Cl. 248—9 **3 Claims**

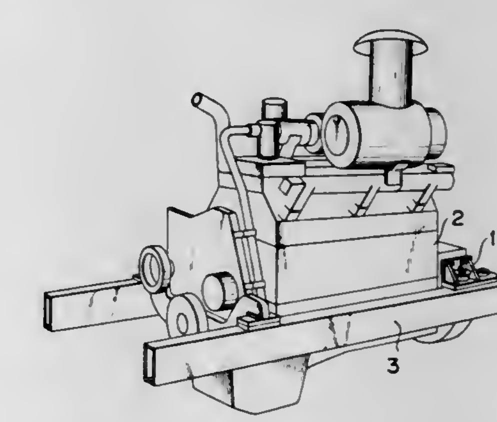

1. An engine mounting apparatus adapted to absorb engine vibrations in every direction comprising a base frame of a vehicle, a bracket for mounting the engine on said base frame, a first bolt means extending through a first aperture in said

bracket and having a washer for fastening said bracket against said base frame, a first spacer disposed coaxially about said first bolt means, a cushion rubber disposed coaxially about said first bolt means and said first spacer between said washer and said base frame for holding said bracket, a second bolt means provided in spaced relation with said first bolt means extending through a second aperture in said bracket, and a second spacer disposed coaxially about said second bolt means, a clearance being provided between said second aperture in said bracket and the outer periphery of said second spacer, said clearance being large enough to allow vibration of said bracket during the normal running condition of the engine and small enough to allow collision of said bracket against said second spacer when excessive vibration of the engine occurs.

4,065,083
EQUIPMENT SECURITY DEVICE
James Scott Gassaway, 2356 Glendon Ave., Los Angeles, Calif. 90064
Filed Feb. 9, 1976, Ser. No. 656,097
Int. Cl.² F16B *41/00*
U.S. Cl. 248—19 **30 Claims**

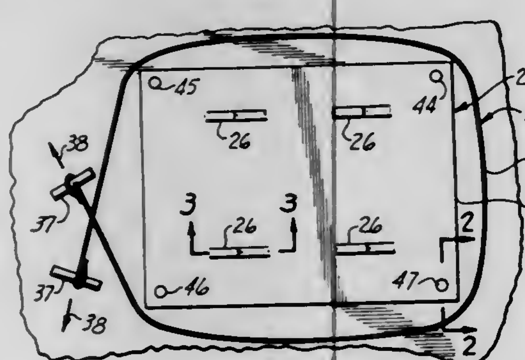

1. Garrot-resistant means for use with apparatus for holding equipment to a surface, said apparatus having plate means to which the equipment is attachable, an adhesive bond means on the bottom of said plate means for attaching the plate means to said surface, said garrot-resistant means comprising: at least three cut-resistant bodies attachable to the said surface independently of and adjacent to said plate means, each body being of sufficient length as to extend from at least substantial contiguity with said surface to an elevation above said bottom of said plate means, at least one of said bodies being disposed off of a line drawn between two of the other bodies, whereby to form a pattern which will exclude a garrot wire from cutting through said adhesive bond means to permit the plate means to be cut loose from the surface, or through sufficient of said adhesive bond means to permit the plate means readily to be broken loose from the said surface.

4,065,084
FOLDABLE STAND
Hans Wiener, Taby, Sweden, assignor to Pressmaster Ltd., Stockholm, Sweden
Filed Mar. 31, 1976, Ser. No. 672,335
Claims priority, application Sweden, Apr. 15, 1975, 7504281
Int. Cl.² D06F *75/40*
U.S. Cl. 248—117.1 **10 Claims**

1. A foldable stand for a soldering iron having a handle, comprising a holder and a supporting bracket therefor, said holder having a rear end articulated to said bracket and a front end forming a seat for said handle, said bracket having a pair of forwardly converging flexible arms; a slider shiftably engaging said arms; and a link pivotally connecting said front end with said slider for drawing said seat toward said bracket upon a rearward shifting of said slider from an advanced position in which said seat is separated from said bracket by a distance approximating the length of said link, said arms having free

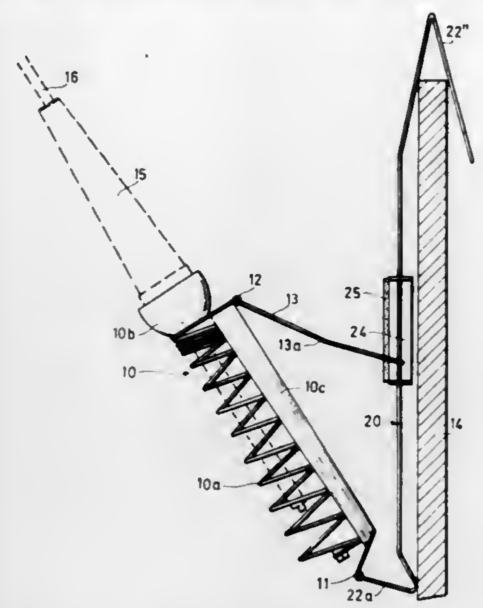

ends spread apart in said advanced position of the slider but closely juxtaposed in a rearwardly retracted position thereof.

4,065,085
FIRE PIT HANGER
Walter L. Gellatly, 350-35th St., Ogden, Utah 84403
Filed Sept. 30, 1976, Ser. No. 728,310
Int. Cl.² A47J *37/00;* **F24B** *3/00*
U.S. Cl. 248—124 **3 Claims**

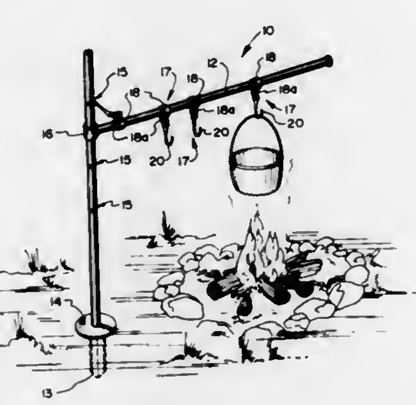

1. A pit fire hanger comprising
an upright support post having an open upper end;
a collar closely fitting around and slidable on said support post;
a support arm fixed to and cantilevered outwardly from said collar;
a plurality of holes spaced along the length of the support post, each said hole having a vertical portion extending axially of the post and a transversely extending portion at a lower end of the vertical portion and extending partially around the post; and
a plurality of hangers carried by and slidable along said support arm, each said hanger including a hook adapted to be suspended from said support arm and at least one said hook being adapted to selectively engage the upper end of the support post or one of said plurality of holes to prevent movement of said collar axially along the post while allowing pivoting movement of said arm with respect to said post.

4,065,086
LEG ASSEMBLY FOR A BABY'S GO-CART
Shinroku Nakao, Yokohama, Japan, assignor to Combi Co., Ltd., Tokyo, Japan
Filed Aug. 24, 1976, Ser. No. 717,422
Int. Cl.² A47D *13/04*
U.S. Cl. 248—188.6 **1 Claim**

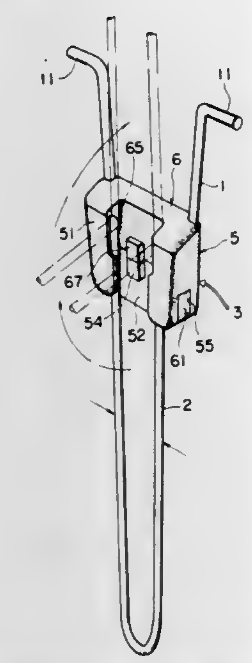

1. A foldable leg assembly for a baby's go-cart comprising an upper member, a lower member and a connecting member; said upper member being generally U-shaped, said lower member having two legs biased away from one another at the upper end thereof and terminating in outwardly extending pivotal posts; said connecting member comprises in combination an outer frame and an inner frame, each of hard synthetic resin, said outer frame having the form of a box with a bottom and having in the central lower half of a front wall thereof a recessed wall, said front wall and said recessed wall coming together and defining facing grooves for receiving said legs respectively of said lower member, said inner frame shaped to fit into said outer frame and having a groove whose section is like a letter "C", said latter groove being adapted to engage with the cross portion of said U-shaped upper member, and having a pair of elongate grooves formed along both sides of said latter groove for receiving the vertically elongated parts of said upper member therein, and having a pair of pivot grooves for fitting said pivotal posts therein provided near the lower end portion of a front wall of said inner frame whereby the squeezing together of said two legs frees said legs from said grooves in said outer frame to permit pivoting of said lower member about said pivotal posts so that said leg assembly can be folded.

4,065,087
MOUNTABLE ATTACHMENT
LeRoy Solden, St. Peter, Minn., assignor to Widen Tool & Stamping, Inc., St. Peter, Minn.
Filed July 15, 1976, Ser. No. 705,414
Int. Cl.² A47B *96/06*
U.S. Cl. 248—201 **5 Claims**

1. A mountable attachment device for mounting accessory items in vehicles and the like, such device including:
a. a first plate member, generally rectangular in shape and including an upstanding lip member along at least a portion of one of the longitudinal sides of said plate to provide a first article retaining element, said lip member being angularly directed to overlie said plate;
b. means for attaching said plate member to a supporting surface;
c. track means including at least a pair of spaced passages through said plate and being arranged transversely with respect to said first article retaining element
d. second article retaining means being arranged in said track means including at least a pair of lip members which lip members are angularly directed to overlie said plate and being directed towards said first retaining element; and,

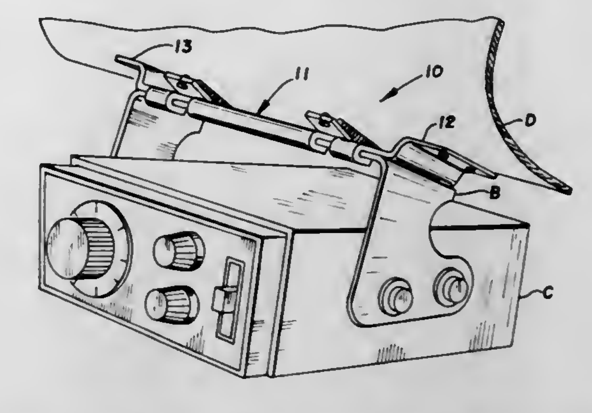

e. biasing means associated with said second article retaining means for normally biasing the same towards said first article retaining element for holding articles therebetween.

4,065,088
UPRIGHT AND BRACKET ARRANGEMENT
Irving W. Shell, 422 Wellington Ave., Chicago, Ill. 60657
Continuation-in-part of Ser. No. 500,574, Aug. 26, 1974. This application Aug. 13, 1975, Ser. No. 604,145
Int. Cl.² A47G *29/02*
U.S. Cl. 248—242 **7 Claims**

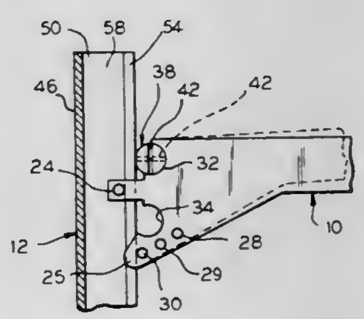

1. In an upright support member and bracket, said bracket comprising:
a first abutting means for contacting the inside of said support member;
a second abutting means for contacting the outside of said support member, the cooperation of said first and second abutting means enabling the vertical position of said bracket to be incrementally varied along the length of said support member;
a third abutting means for contacting the outside of said support member for finely setting the slant of the bracket and locking it in position; and
said support member including a rear wall, opposed side walls and a flange extending inward from each of the side walls to define a gap therebetween, said walls and flanges defining a channel communicating with a gap, said first abutting means contacting the inside of the flanges and spanning the width of said gap, and said second and third abutting means contacting the outside of the flanges and also spanning the width of said gap.

4,065,089
CANTILEVER RACK CONSTRUCTION
Donald Frazier, Mendham Road, Far Hills, N.J. 07931, and John R. Hardin, Jr., Pottersville Road, Gladstone, N.J. 07934
Filed Mar. 9, 1977, Ser. No. 775,742
Int. Cl.² A47B *96/12*
U.S. Cl. 248—245 **19 Claims**

1. A cantilever rack construction comprising:
a. a rigid, horizontally disposed connector plate for securing a cantilever beam to a column,

b. a pair of integral, rigid arms on the front of the connector plate,
c. the arms converging toward each other, and embracing an elongated space between the arms and the connector plate,
d. a threaded passage in the end of each arm,
e. a threaded member in each threaded passage,
f. a cantilever beam for supporting objects, attached to the back of the connector plate,
g. a column,
h. a web on the column between the ends of the arms of the connector plate,

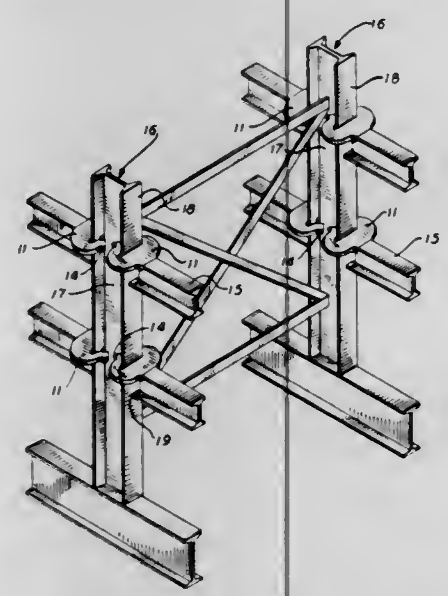

i. a flange on the web of the column in the elongated space,
j. the threaded passages directed into the elongated space generally toward the intersection of the web with the flange of the column,
k. the threaded members engaged with the back of the flange of the column at the intersection of the flange and the web of the column,
l. the connector plate between the arms being in abutment with the front of the flange, when the threaded members are tightened.

4,065,090
CLIP ASSEMBLY FOR CEILING TRACK RAILINGS
Harold D. Mauney, 2095 Laura Lane, West Palm Beach, Fla. 33406
Filed Mar. 5, 1976, Ser. No. 664,090
Int. Cl.² B42F *13/00;* **A44B** *21/00*
U.S. Cl. 248—318 **2 Claims**

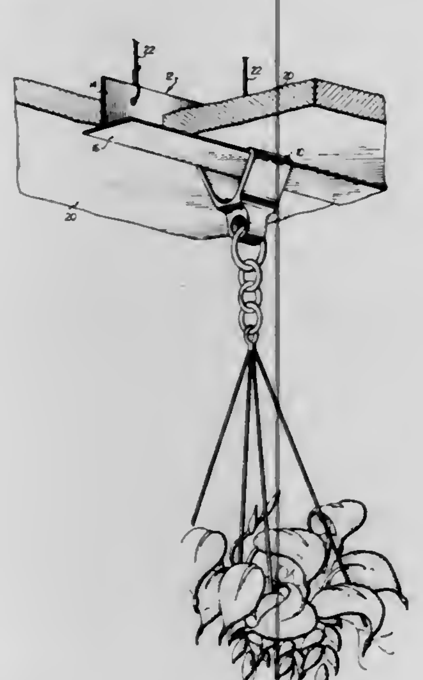

1. A clip assembly formed out of a single piece of substantially rigid material for suspending objects from ceiling track railings having flat ceiling supporting surfaces, said clip comprising:
a. opposed side walls and an end wall joining one end of each of said side walls, said side walls extending substantially their entire length at an angle relative to each other, the other end of each of said side walls having an end portion formed inwardly thereof such that the end portion of each side wall is disposed opposite the other and spaced therefrom, said end portions having an inner surface area which is flat and which lies in the same plane for engaging said flat ceiling supporting surfaces of said track railing, and
b. web means integrally formed with said end wall, said web means having a recess formed therethrough for suspending said objects, said angle having a vertex at the approximate center of said recess through said web.

4,065,091
PICTURE FRAME SUPPORT
John Ulrich, Chicago, Ill., assignor to Nu-Dell Plastics Corporation, Chicago, Ill.
Filed Dec. 13, 1976, Ser. No. 750,284
Int. Cl.² A47F *7/14*
U.S. Cl. 248—473 **6 Claims**

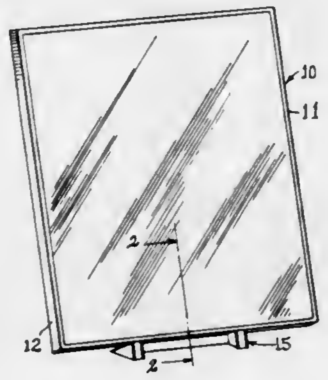

1. A combination picture frame and stand therefor comprising
a. an open-back rectangularly shaped frame having a transparent face defined by a laterally extending peripheral flange,
b. a base support substantially triangular in cross section presenting horizontal bottom edge surfaces and an inclined upper face,
c. forwardly projecting leg members formed from opposite side walls of said base support providing continuous horizontal bottom edge surfaces and substantially flat frame-supporting surfaces extending coplanar with said inclined upper face of said base support,
d. means extending in a spaced parallel relation to said leg members of said base cooperating with said frame-supporting surfaces for frictionally holding a portion of said peripheral flange of said frame thereon so as to support said transparent face of said frame vertically from said inclined upper face of said base.

4,065,092
QUICK RELEASE SECURITY LATCH DEVICE FOR RADIO ANTENNA BASE
Maurice H. Spinks, Sr., and Yvon E. Juge, both of Fort Worth, Tex., assignors to SouthCom, Inc., Fort Worth, Tex.
Filed Apr. 12, 1976, Ser. No. 675,996
Int. Cl.² B65J *1/22*
U.S. Cl. 248—503 **2 Claims**

1. A security latch device for quickly releasably mounting and removing a radio antenna base upon supporting structure of a vehicle comprising: a clamping loop connectible with said radio antenna and base and movable between a tensioned locking condition and a relaxed release condition; and a tension lever assembly securable with said supporting structure of said vehicle including a mounting bracket formed by a channel shaped member having a central portion adapted to be secured with said vehicle supporting structure and a tension lever formed of a channel shaped member having locking recess means for engagement by said clamping loop and pivotally

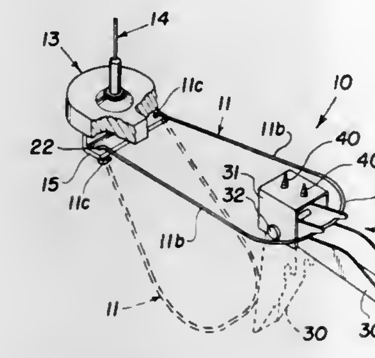

secured within said mounting bracket for movement between locking and release positions for releasably engaging said clamping loop for imposing a locking tension on said clamping loop to hold said antenna base on said supporting structure of said vehicle.

4,065,093
FLOW CONTROL DEVICE
Thomas E. Phillips, Ingleside, Ill., assignor to Baxter Travenol Laboratories, Inc., Deerfield, Ill.
Filed May 24, 1976, Ser. No. 689,321
Int. Cl.² F16K *7/06*
U.S. Cl. 251—6 **12 Claims**

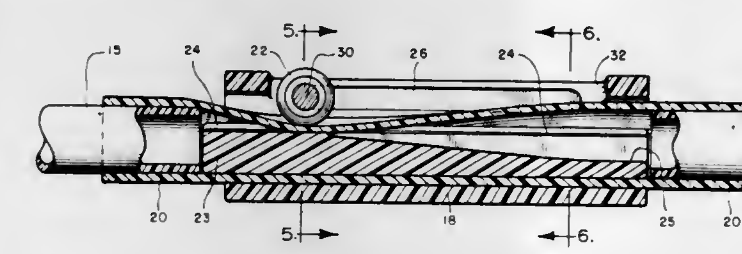

1. A flow control device for establishing a desired flow rate in a fluid flow system comprising, in combination:
a conduit having a resilient wall;
a generally cylindrical insert member disposed within said conduit, said insert member including an axially-extending depression of uniform cross-section;
a flow bypass channel of progressively increasing cross-sectional area along the axis of said depression, said depression and channel defining in conjunction with said resilient wall a fluid passage through said conduit communicating with the ends of said conduit; and
flow control means for forcing the wall of said conduit into said depression at a desired location along said axis to restrict flow in said fluid passage to a predetermined underlying portion of said flow bypass channel thereby providing said desired flow rate.

4,065,094
HYDRAULIC ACTUATOR
Ted Adams, Cleveland Heights, Ohio, assignor to Parker-Hannifin Corporation, Cleveland, Ohio
Filed Aug. 19, 1976, Ser. No. 715,983
Int. Cl.² F16K *31/12;* **F15B** *18/00, 20/00*
U.S. Cl. 251—26 **33 Claims**

1. A self-contained hydraulic actuator comprising a housing adapted to be secured to a valve housing for opening and closing said valve by hydraulically actuating a movable valve member is said valve housing; said actuator housing comprising a hydraulic motor having a hydraulically-actuated component adapted to be secured to said valve member, a reservoir, an air-driven hydraulic pump, and an air-piloted directional control valve operatively interconnected together for fluid pressure actuation of said component selectively in opposite directions in response to operation of said directional control valve; and first and second solenoid-operated pilot valves operative when energized and deenergized to vent and pressurize a first pilot air chamber in said directional control valve

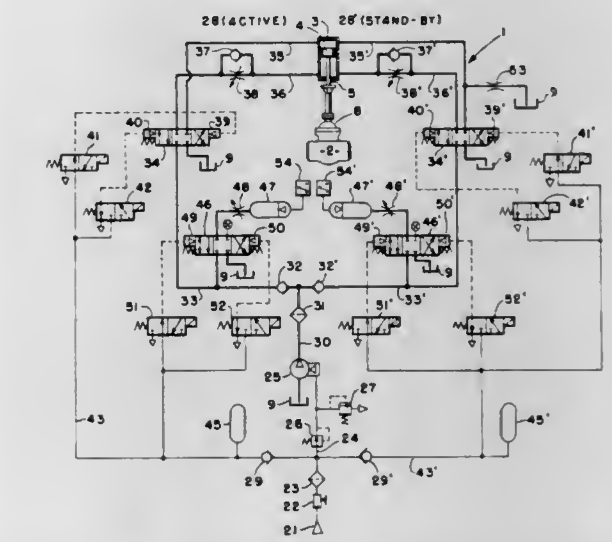

and to pressurize and vent a second pilot air chamber in said directional control valve to actuate said component to respectively open and close said valve; said actuator housing having an air pressure inlet port communicating with said pump and said first and second pilot valves.

4,065,095
FLUID LEVEL CONTROL VALVE
Dwight N. Johnson, 325 N. Bell Air St., Anaheim, Calif. 92801
Continuation of Ser. No. 550,220, Feb. 18, 1975, abandoned, which is a division of Ser. No. 339,548, March 9, 1973, Pat. No. 3,895,645. This application Sept. 1, 1976, Ser. No. 719,817
Int. Cl.² F16K *47/02*
U.S. Cl. 251—118 **9 Claims**

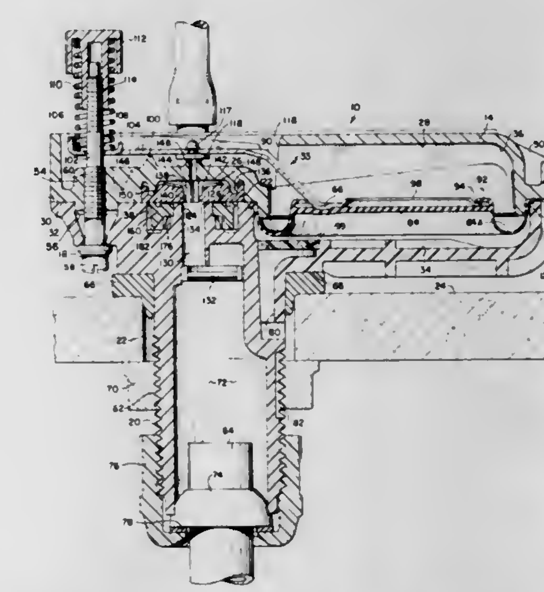

1. A valve comprising a housing having a generally annular valving surface surrounding a generally annular valve seat, an inlet passage communicating with the radially inner side of said valve seat, said surface lying in a plane generally transverse to the axis of said inlet passage, said surface including a plurality of rib portions extending generally radially outward from said valve seat, and defining between adjacent ribs a plurality of valve outlet passages extending from said valving surface in a direction generally parallel with the axis of said inlet passage, said passages terminating at said valving surface in outlet ports coplanar with said valving surface, said ports having increasing widths in the radially outward direction, and a flexible annular valve member having an inner periphery overlying said valve seat, an outer periphery fixed against said valving surface, and an intermediate portion engageable with said valving surface and overlying said outlet ports.

4,065,096
SOLENOID-ACTUATED VALVE
Virgil L. Frantz, Salem, and Thomas D. Taylor, Roanoke, both of Va., assignors to Graham-White Sales Corporation and Graham-White Manufacturing Co., both of Salem, Va.
Filed July 1, 1976, Ser. No. 701,514
Int. Cl.² F16K *31/06;* **H01F** *7/18*
U.S. Cl. 251—137 **6 Claims**

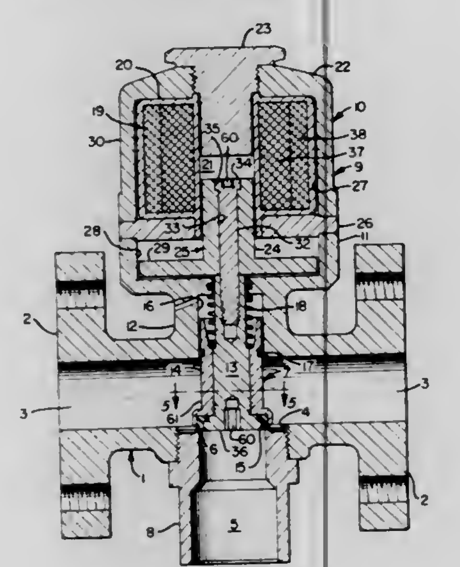

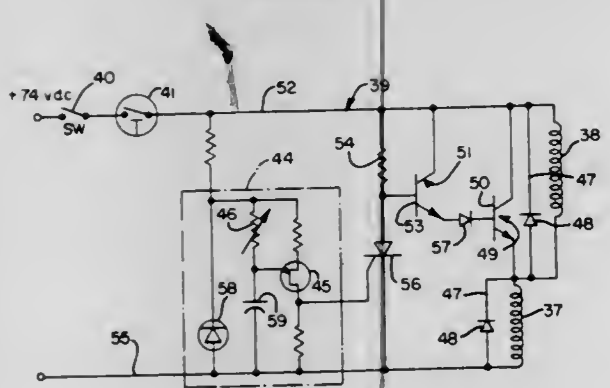

1. A solenoid-actuated valve, comprising a valve member, a solenoid having a coil divided into a plurality of windings of different power, and a solid state control circuit connecting said windings in series to a direct current power source for automatically energizing in succession a high power of said windings to open said valve member and a low power of said windings to hold said valve member in open position, said control circuit, for predetermining a time delay between energizing of said high and low power windings of a duration to preclude overheating of said high power winding, including switching transistor means connected in parallel with said low power winding for initially shunting current therepast, initially off SCR means between said switching transistor means and ground, and a unijunction transistor for turning on said SCR means after said predetermined time delay and by discharging said switching transistor means to ground diverting current to and energizing said low power winding.

4,065,097
SLOT SEALING VALVE FOR VACUUM COATING APPARATUS
Mitchell E. Timin, Berkeley, Calif., assignor to Airco, Inc., Montvale, N.J.
Filed May 17, 1976, Ser. No. 686,851
Int. Cl.² F16K *13/00*
U.S. Cl. 251—228 **8 Claims**

1. In equipment for vacuum coating substrates including a vacuum chamber having an access opening in a wall thereof through which a substrate can be moved, an apparatus comprising: a sealing valve for said opening pivotally mounted to open for substrate clearance and to close for making a vacuum-tight seal, means for actuating the valve, guide roller means pivotally mounted on the valve actuating means, fixed guide means for guiding the roller means for reciprocal movement along a linear path, and a thrust member mounted co-pivotally with the roller means for interconnecting the actuating means and the valve defining a line-of-thrust therebetween, the acute angle between the line-of-thrust and the line of motion of the actuating means increasing toward 90° as the valve approaches

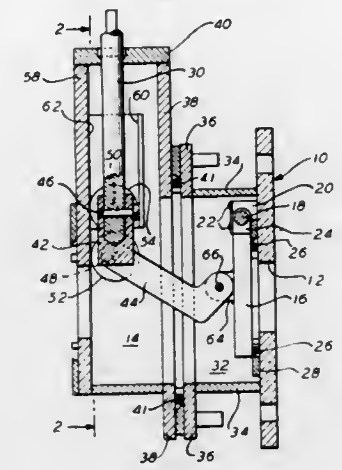

its closed position, whereby the ratio of linear travel of the actuating end of the thrust member to the arcuate travel of the valve-connected end thereof increases materially during the final closing and valve-sealing movement of the thrust member.

4,065,098
WEDGE PUSH-IN APPARATUS FOR A WIRE TENSIONING PRESS
Hans-Rudolf Siegwart, Kilchberg, and Rene Kaser, Wettingen, both of Switzerland, assignors to Bureau BBR Ltd., Zurich, Switzerland
Filed June 16, 1977, Ser. No. 807,294
Claims priority, application Switzerland, July 2, 1976, 8512/76
Int. Cl.² E21B *19/00*
U.S. Cl. 254—29 A **10 Claims**

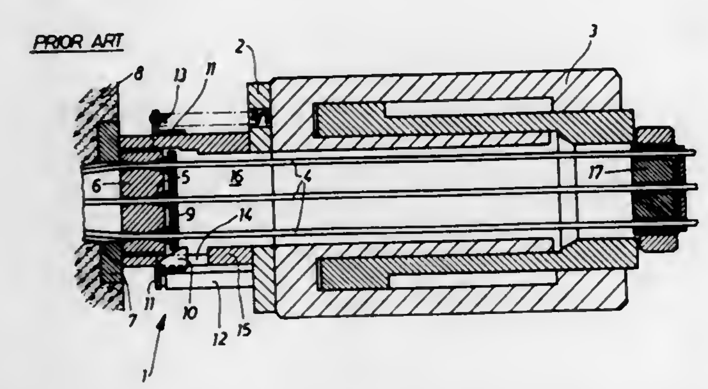

1. In a wedge press-in apparatus for a tensioning press for tensioning a bundle of wires, the individual wires of which can be anchored by means of wedges in an anchoring head, a wedge push-in plate serving to push-in the wedges, the improvement which comprises:
push-in elements for actuating the wedge push-in plate;
means providing a common, lengthwise displaceable support movable out of a starting position;
means mounting the push-in elements at said common, lengthwise displaceable support means for movement between a rest position and a work position;
said push-in elements being mounted at said support means such that with said support means in its starting position said push-in elements do not extend into the interior of the wedge push-in apparatus; and
means for placement of the push-in elements into their work position for actuating the wedge push-in plate.

4,065,099
IN-POST TENNIS NET TIGHTENER
Stanley A. Germain, Glendale, Calif., assignor to L. A. Steelcraft Products, Inc., Pasadena, Calif.
Filed Jan. 2, 1976, Ser. No. 646,079
Int. Cl.² A63B *61/04*
U.S. Cl. 254—164 **3 Claims**

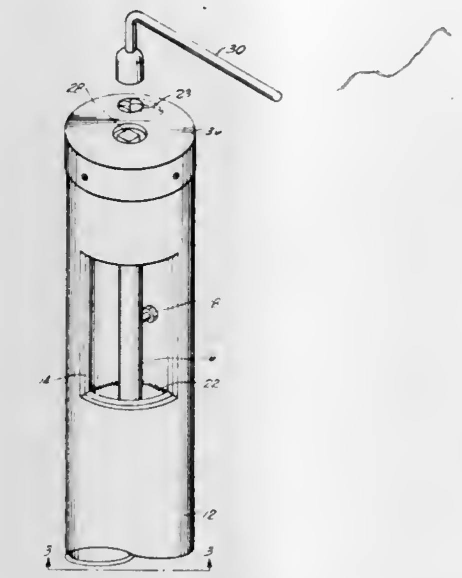

1. A tamper-proof tennis net tension mechanism comprising:
a. an open ended support pole for a tennis net;
b. an open ended cylindrical casing within the pole substantially axially aligned with the pole, and wherein the pole open end and casing open end face in the same direction;
c. an axle coaxial with the casing inside the casing and rotatably supported thereby;
d. means for securing a tennis net support cable to the axle;
e. means secured to the axle for engaging a tool for applying tension to the tennis net by rotating the axle;
f. a ratchet connected to the axle;
g. a pawl secured to the casing and engagable with the ratchet to prevent release of tension on a tennis net support cable secured to the axle;
h. a cap for the open end of the pole;
i. an opening in the cap for access to the means for engaging the tension applying tool;
j. an opening in the cap for access to the pawl for disengaging the pawl from the ratchet; and
k. openings in the pole and the casing for access to the means for securing a net cable to the axle.

4,065,100
HOIST LOAD BRAKE
Michael M. Walsh, Northville, Mich., assignor to Eaton Corporation, Cleveland, Ohio
Filed Feb. 5, 1976, Ser. No. 655,334
Int. Cl.² B66D *1/00*
U.S. Cl. 254—167 **7 Claims**

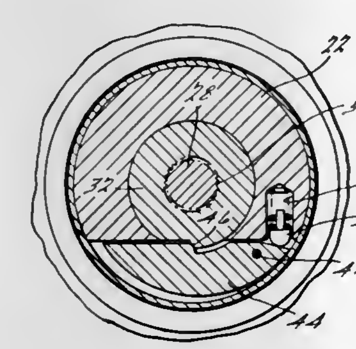

1. A hoist for lifting loads having an input drive and an output drive, the output drive being adapted to engage a chain attached to the load, the hoist having means to transmit force from the input drive to the output drive, the transmitting means comprising:
a splined shaft rotatably mounted within a housing and attached to the output drive;
a plate, having friction material on one face thereof, rigidly mounted on the splined shaft;
an annular member mounted on the splined shaft, having a gripping surface on the surface facing the plate and a spiral cam follower surface on the opposite face, the member being adapted for rotational and axial movement along the splined shaft;
a ratchet wheel having a plurality of teeth rotatably mounted on the shaft between the plate and a spiral cam member so that the gripping surface can engage the sides of the ratchet wheel, the ratchet wheel being adapted to transmit force from the input drive;
a pawl which allows rotation of the ratchet wheel in only one direction;
the spiral cam member mounted on the splined shaft is prevented from either angular or axial movement relative to the shaft and has associated therewith biasing means for biasing the spiral cam member into engagement with the spiral cam follower so that the sides of the ratchet wheel are firmly gripped by the friction material;
means for rotationally moving the spiral cam member relative to the cam follower to a disengaged position whereby the ratchet wheel is not contacted by the frictional material; and
a locking means suitable for holding the spiral cam member in a disengaged position to allow free chaining of the hoist, the locking means being sensitive to an acceleration of a first magnitude produced by a force acting at an angle to a surface of the locking means which will cause the locking means to disengage and the locking means being sensitive to an angular velocity of a second magnitude produced by a centrifugal force acting through the center of mass of the locking means which will cause the locking means to disengage; the disengagement of the locking means releases the biasing means which moves the spiral cam member into engagement with the annular member thereby applying a braking force to the output drive and stopping the free movement of the chain.

4,065,101
TORSION SPOOL
Mehmet D. Korkut, 3848 Veteran Blvd., Metairie, La. 70002
Filed Oct. 7, 1976, Ser. No. 730,502
Int. Cl.² B66D *1/26*
U.S. Cl. 254—184 **9 Claims**

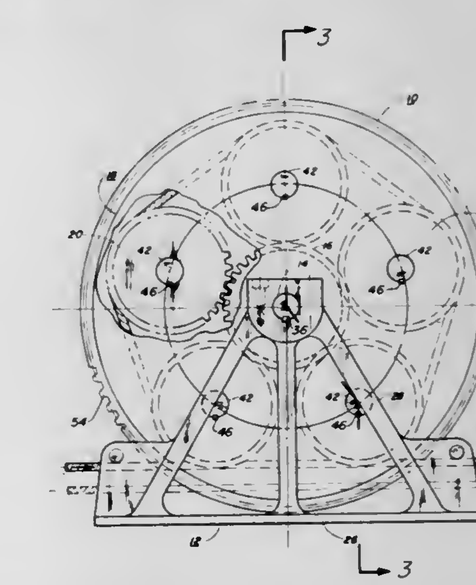

1. An improved torsion spool for reeling spooling line in and out comprising:
a. a stand secured to supporting structure and extending substantially thereabove;
b. a stationary shaft supported by its ends on said stand;
c. a center gear fixed on said stationary shaft and adjacent and end thereof;

d. a composite drum having circular end plates center mounted on and around said stationary shaft for rotation therearound, said end plates being spaced apart by a plurality of transverse shafts mounted for rotation therein and therebetween without interference with each other, said transverse shafts being mounted intermediate the center and the perimeter of said circular end plates;

e. a plurality of satellite gears, similar to and meshing with said center gear, keyed respectively to said transverse shafts for rotation therewith as said drum end plates rotate around said stationary shaft;

f. a plurality of satellite cylinders fixed to said transverse shafts for rotation therewith, said cylinders having circumferential surfaces defining respectively similar helical grooves and adjustable with respective shafts and satellite gears to position for said grooves of adjacent cylinders to be in helical alignment; and

g. means to rotate said end plates.

4,065,102

METHOD OF REMOVING PRINTING PRESS ROLLERS AND REMOVAL MECHANISM FOR USE THEREIN

Laurence E. Johnson, 2063 S. Birch, Santa Ana, Calif. 92707, and Duane S. Reynolds, 1180 Bryan, No. D, Tustin, Calif. 92680

Filed Aug. 9, 1976, Ser. No. 712,912

Int. Cl.^{2} B66D *1/00*

U.S. Cl. 254—186 HC **4 Claims**

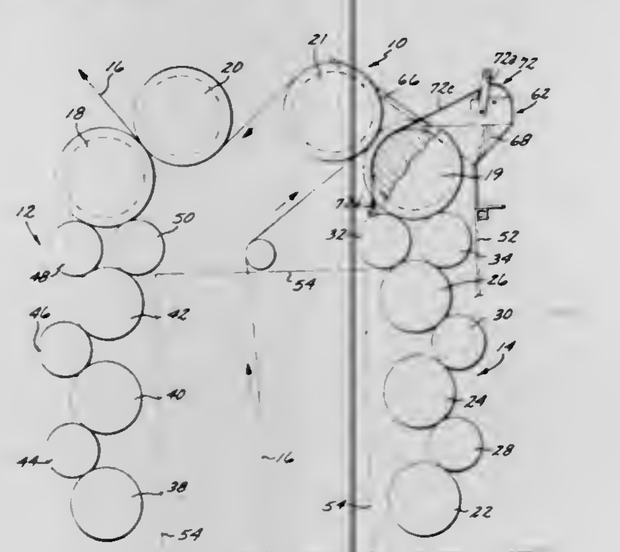

1. A handling mechanism for handling a printing press roller comprising in combination,

a frame,

a support for said frame formed with a generally vertically disposed leg and a generally horizontally disposed leg for ready attachment and removability to a structural member of a printing press,

said frame comprising an extension fixed to said vertical leg of said support and forming an obtuse angle therewith to engage a pair of press rollers when said support is attached to said structural member,

mounting means on said extension and positioned between said extension and said support and comprising a generally horizontal mounting pad,

and a winch secured to said mounting pad and having a line which is directed generally horizontally toward said extension and thereby being coupled to a printing press roller for handling thereof and also provide the effect that a pulling force on said line exerts a force on said pair of press rollers.

4,065,103

FENCE ATTACHMENT

Charles R. Sweezey, Rte. 4, Box 40, Piedmont, S.C. 29673

Filed Mar. 29, 1976, Ser. No. 671,681

Int. Cl.^{2} E04H *17/00*

U.S. Cl. 256—11 **2 Claims**

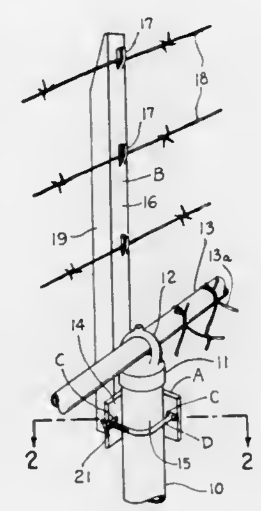

1. An attachment for use in stringing barbed wire and the like on existing chain link fences having vertical posts comprising:

a vertical angle having diverging legs for receiving and engaging a vertical post therebetween;

an upright member, extending above the fence, having a web and a lower end integrally connected to said vertical angle adjacent a junction of said legs;

barbed wire receiving and securing means carried on said web;

a horizontal channel adjacent a free edge of each of said diverging legs of said vertical angle;

an arcuate shank extending through each of said channels, said shank being disposed horizontally and defining a bight for receiving said vertical post therewithin;

a first abutment carried by said shank adjacent one end thereof abutting the exterior of one of said diverging legs adjacent one of said channels for retaining said shank in said channel;

a second abutment threadably carried upon said shank adjacent the remote end thereof for abutting the exterior of the other of said diverging legs adjacent said other channel for securing the attachment tightly upon said vertical post; and

said other channel being open at said free edge of its respective diverging leg for receiving said shank when pivoted in a generally horizontal movement about said first abutment.

4,065,104

SCHOOL CROSSING BARRICADE

Sidney M. Pass, 910 Pickens Ave., Pensacola, Fla. 32503

Filed Mar. 16, 1976, Ser. No. 667,376

Int. Cl.^{2} A01K *3/00*

U.S. Cl. 256—13.1 **1 Claim**

1. A portable barricade for use at school crossings, and the like, comprising, in combination:

a. a frame movable over a support surface;

b. a signal means mounted on the frame for warning parties approaching the barricade of the presence of certain hazardous conditions; and

c. brake means mounted on the frame for permitting selective retention of the barricade in a desired location, the brake means including a brake arm pivotally mounted on the frame for moving between a disengaged position and a position engaging the support surface which supports the frame for restraining the frame from movement relative to the support surface, the frame including wheels rotatably mounted thereon for facilitating movement of the frame,

the frame having a pair of longitudinally spaced ends, and wherein the wheels include a caster disposed adjacent an end of the frame, with the brake arm being pivotally mounted on the frame adjacent the caster and of a length sufficient to lift the caster from the support surface which supports the frame when the brake arm is in the position engaging the support surface, the brake means further including an actuating lever cantilever mounted on the brake arm and arranged extending away from the frame for facilitating movement of the brake arm from the disengaged position to the position engaging the support surface by the application of foot pressure to the lever, and a tension spring connected to and extending between the actuating lever and the frame for biasing the brake arm toward its disengaged position, the wheels further including a pair of axially spaced, fixed wheels disposed on the frame at the end thereof spaced from the caster, the frame further including a plurality of sections selectively connectible to one another in predetermined numbers to vary the length of the frame, the signal means including a lamp assembly and a power supply connected to the lamp assembly, the lamp assembly including a pole pivotally mounted on the frame for swinging movement between an operative position extending away from the frame and a storage position substantially adjacent the frame, there being a plurality of lamp assemblies each pivotally mounted on the frame, each of the lamp assemblies including a flashing lamp, and the power supply being a rechargeable battery pack mounted on the frame and including an electrical switch for selectively energizing the flashing lamps.

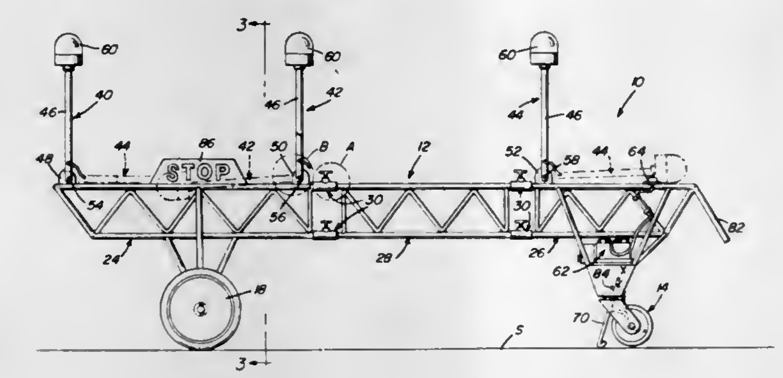

4,065,105

FLUIDIZING MEANS FOR REDUCING VISCOSITY OF SLURRIES

Guy W. Lussiez, Golden, Colo., and Hugh F. Reid, Union City, Calif., assignors to Amax Inc., Greenwich, Conn.

Filed Sept. 17, 1976, Ser. No. 724,364

Int. Cl.^{2} B01F *7/16, 9/00*

U.S. Cl. 366—348 **11 Claims**

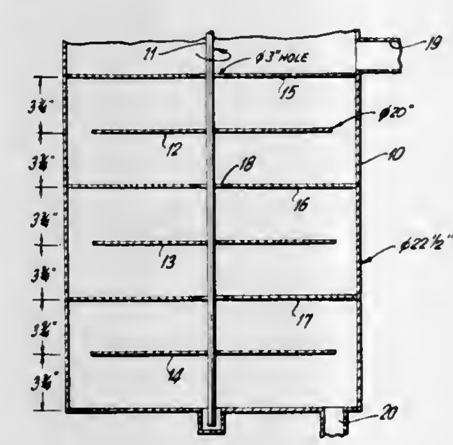

1. A process of reducing the viscosity of a work hardened slurry of finely divided ore having a pulp density of at least about 15% by weight of solids which comprises,

gently mechanically agitating a mass of said work hardened slurry confined in a container whereby to cause relative movement between said mass and a contacting surface such that said mass is subjected to shear forces,

the relative movement with respect to said contacting surface being at a selected linear velocity sufficient to provide shear forces in said agitated mass in contact therewith effective for reducing the viscosity to a desired level more than 50% below the original viscosity,

and continuing said agitation at substantially said selected linear velocity until the viscosity has been reduced to said desired level.

4,065,106

MIXING HEAD FOR MACHINES FOR PRODUCING MULTICOMPONENT PLASTICS

Ferdinand Althausen, Neunkirchen, and Reiner Raffel, Siegburg, both of Germany, assignors to Maschinen Fabrik Hennecke GmbH, Leverkusen, Germany

Filed May 8, 1975, Ser. No. 575,848

Claims priority, application Germany, May 15, 1974, 2423492

Int. Cl.^{2} B01F *15/00*

U.S. Cl. 366—76 **7 Claims**

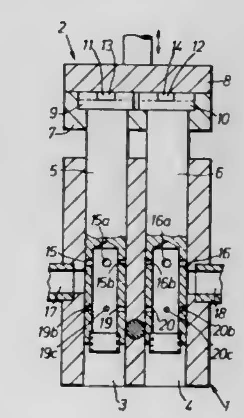

1. A mixing head for a machine for producing multicomponent plastics, comprising a housing, and at least two hollow slides which are guided in bores in the housing, said slides being coupled together by a yoke and having inlet openings which communicate with feedlines and injection openings which, in the mixing position of the slides, open into a mixing chamber, wherein the lift slides have a plurality of injection openings differing in cross-sectional area from one another, arranged in a single plane perpendicular to the axis of the slides and wherein the slides are provided with heads which carry changeover detents engaging with the yoke the detents being so arranged that selected injection openings can be brought into communication with the mixing chamber.

4,065,107

APPARATUS FOR MIXING LIQUIDS

Judd Van Horbek, Box 884, El Granada, Calif. 94018

Filed Oct. 29, 1976, Ser. No. 736,711

Int. Cl.^{2} B01F *7/16*

U.S. Cl. 366—343 **7 Claims**

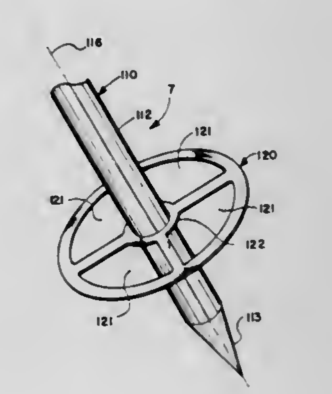

1. An apparatus for mixing liquids, comprising:

a handle having an upper and a lower portion, said lower portion terminating in a salient surface; and

one or more slotted mixing blades attached to the lower portion of the handle;

wherein said one or more slotted mixing blades are first, second and third blades, said first slotted mixing blade forms an outer circular ring and is planar with its plane perpendicular to said handle and its center concentric with the center of the handle, and said second and third slotted mixing blades are rectangular and planar, and perpendicular and parallel to the handle, and the second and third blades bisect the handle and the handle bisects the second and third blades, and the first blade forms an outer circular ring.

4,065,108

NON-RETURN VALVE FOR MOTTLE CHARGE IN PLASTIC INJECTION MOLDING MACHINE

Bernie A. Olmsted, East Longmeadow, Mass., assignor to Package Machinery Company, East Longmeadow, Mass.

Filed Nov. 11, 1976, Ser. No. 740,933

Int. Cl.² B29B *1/06*

U.S. Cl. 366—76 **2 Claims**

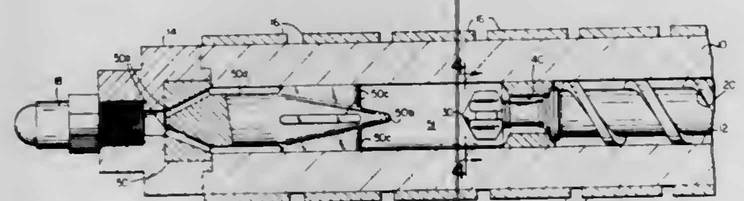

1. In a plastic injection molding machine having a heated barrel, a screw in the barrel bore which is rotated to advance thermoplastic material, including pellets, toward a nozzle and thus to build up a charge of such material under pressure between the nozzle and front end of the screw, the screw being adapted to slide rearwardly in the bore from the pressure of such charge and being further adapted to be thrust forwardly and thus force the collected charge through the nozzle; an improved non-return valve comprising a stud on the front end of the screw having a forwardly extending reduced diameter portion and a larger diameter cylindrical rear portion and also having an enlarged diameter nose secured to its front end, flow passage means for the thermoplastic material and defined at least in part by said nose, and an annular valve shuttle engaging the wall of the barrel bore but slidable therein, the inside diameter of the shuttle providing a close sliding fit over the corresponding diameter cylindrical rear portion on the stud, said shuttle defining said flow passage means with said nose and providing space around the reduced diameter portion of the stud, and the shuttle being located with respect to the screw and stud so that during screw rotation the shuttle is forced forwardly by the advancing material into engagement with the stud nose in the open position for the valve and so that the screw is thrust forwardly the corresponding diameter rear porton of the stud slides into the inside diameter of the shuttle to close the valve against flow of the material rearwardly of the advancing screw.

4,065,109

TORCH CUTTING MACHINE AND DRIVE CONTROL ARRANGEMENT THEREFOR

Ralph Ogden, 1304 Fisher St., Munster, Ind. 46321

Filed Dec. 27, 1976, Ser. No. 754,361

Int. Cl.² B23K *7/10*

U.S. Cl. 266—69 **12 Claims**

1. In a wheeled frame riding on a trackway and having at least one of its wheels driven by hydraulic motor means, and a hydraulic system for actuating said motor means including a hydraulic liquid flow orienting means for controlling the flow of hydraulic liquid to and from the motor means,

a drive control arrangement for controlling the operation of said flow orienting means and comprising:

a stepping motor assembly mounted on said frame for free floating shifting rectilinear movement longitudinally of the trackway and including a stepping motor,

a rack extending longitudinally of the trackway and made stationary with respect thereto,

a gear driven by said motor and carried by said motor assembly,

said gear being in meshing relation with said rack for rolling movement along said rack when said stepping motor is driven to drive said gear,

said flow orienting means comprising a flow orienting valve including a housing made fast to said frame, a flow orienting valve member mounted in said housing and movable

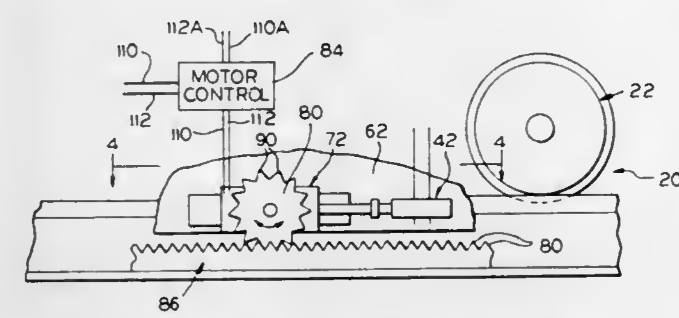

between null and hydraulic motor driving positions, and means for biasing said valve member to its said null position,

with said valve member being connected to said stepping motor assembly for movement thereby when said stepping motor assembly is moved relative to said frame under the action of said gear rolling on said rack when said gear is driven by said motor,

and means for driving said stepping motor,

whereby when said stepping motor is at rest, said valve member is in its null position precluding driving of said hydraulic motor means, and when said stepping motor is driven said valve member is moved to a hydraulic motor driven position for driving said frame along the trackway through said hydraulic motor means to the exclusion of said stepping motor.

4,065,110

METHOD AND APPARATUS FOR PURIFYING BLISTER FURNACE EFFLUENT

Ralph A. Koenig, Tulsa, Okla., assignor to John Zink Company, Tulsa, Okla.

Division of Ser. No. 587,957, June 18, 1975, Pat. No. 4,009,240. This application Dec. 10, 1976, Ser. No. 749,236

Int. Cl.² B01D *53/34*

U.S. Cl. 266—78 **7 Claims**

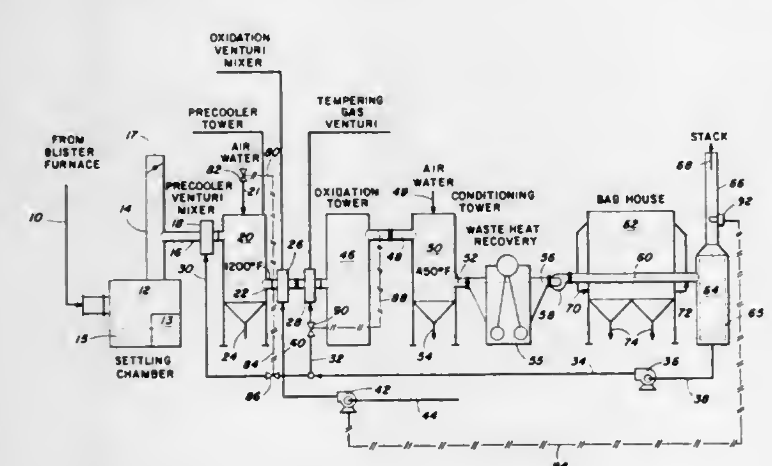

1. Apparatus for processing the effluent gases from a copper blister furnace during the charge and melt cycle and poling cycle comprising:

a. settling chamber means for receiving said effluent, and lowering the velocity of said effluent gases;

b. means for precooling said effluent gases with air and water;

c. air mixing means for oxidizing the oxidizable material in said effluent gases.

d. means for cooling said oxidized gases;

e. means for venting said cooled oxidized gases; and

f. means selectively operable during said poling cycle to recycle cooled gases from said venting means to the input to said precooling means;

g. means selectively operable during said poling cycle to inject air into the output gases from said precooling means; and

h. means selectively operable during said poling cycle to close the supply of air and water to said precooling means.

4,065,111

COVER FOR THE IGNITION CARRIAGE IN A SINTERING PLANT

Eero Kyto, Soukankuja 2 A 9, 02360 Espoo 36, Finland

Filed Apr. 21, 1976, Ser. No. 678,859

Claims priority, application Finland, Apr. 22, 1975, 751192

Int. Cl.² C21B *1/10*

U.S. Cl. 266—138 **7 Claims**

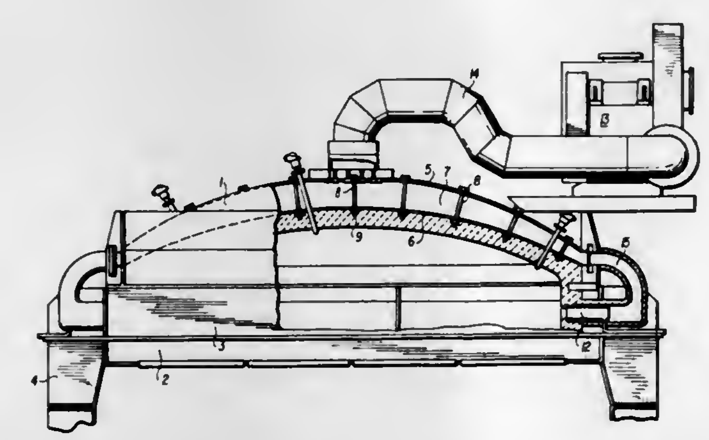

1. In a cover for the ignition frame of a sintering apparatus wherein said cover includes sides, burners mounted substantially horizontally on the sides of the cover and means for supplying combustion air to said burners, the improvement comprising said combustion air supplying means including a blower and an intermediate, enclosed space arranged in said cover, a pipe connecting said blower to a central portion of said cover for communicating said blower with said space and insulated pipes connected to said burners and to said space adjacent the sides of said cover for communicating said space with said burners whereby combustion air is conducted from said blower via said space to the burners.

4,065,112

HYDRAULIC JACK CUSHIONING APPARATUS

Edward V. Leskovec, Eastlake, and Ralph D. Porter, Euclid, both of Ohio, assignors to Towmotor Corporation, Mentor, Ohio

Filed Aug. 23, 1976, Ser. No. 716,847

Int. Cl.² B66F *3/24*

U.S. Cl. 267—34 **9 Claims**

1. Apparatus for cushioning the movement of one telescopic member of a hydraulic jack toward another, comprising:

wall means carried by one of said telescopic members and forming a blind bore having an open end and an opposite closed end;

a plunger reciprocably mounted within said blind bore for movement between a first position adjacent the open end of the bore and a second position adjacent its closed end and defining a variable chamber therebetween;

surface means carried on the other of said telescopic members for engagement with said plunger to effect the displacement of the plunger toward its second position as the telescopic members approach a predetermined position relative to each other;

a plurality of axially spaced orifices formed through said wall means between said first and second positions of the plunger so as to be sequentially closed off by the plunger as it moves towards its second position, thereby progressively restricting the escape of fluid from the chamber as the plunger approaches its second position;

biasing means for normally biasing said plunger toward its first position;

said plunger has an inner end having a spring cavity formed therein, and said biasing means includes a helical compression spring having one end seated within said spring cavity and its other end seated against the closed end of the blind bore;

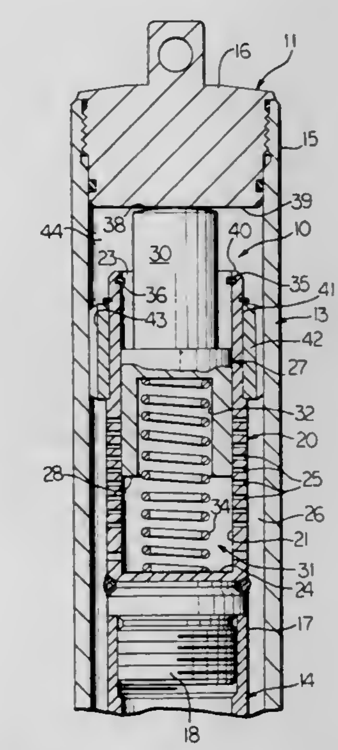

a snap ring disposed within a groove formed adjacent the open end of the bore for retaining the plunger therewithin;

said other member has an end cap closing one end thereof, said end cap having an inner transverse surface thereon providing said surface means;

said other member has an end portion adjacent said end cap and said wall means is mounted to said end portion with the open end of said bore facing said end cap of the outer member; and

said plunger has an elongated stem extending therefrom, said stem having a distal end extendable from the open end of the bore for engagement with the transverse surface of the end cap.

4,065,113

SPRING LOADING SYSTEMS

David Allan Wright, Edinburgh, Scotland, assignor to Ferranti Limited, Hollinwood, England

Filed Apr. 5, 1976, Ser. No. 673,541

Claims priority, application United Kingdom, Apr. 11, 1975, 15032/75

Int. Cl.² F16F *1/04*

U.S. Cl. 267—156 **12 Claims**

1. A spring loading system comprising a former surface of substantially constant curvature, a spring strip of substantially uniform cross section adapted to be wound from a naturally unstressed state to conform closely with the surface of the former in a stressed state, coupling means connectd to a driven member to couple movements of the member with winding or

unwinding of the strip, and means for ensuring that the strip conforms substantially to a predetermined shape for a pre-

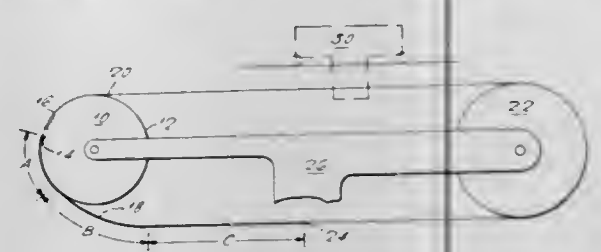

scribed distance away from its point of contact with the former surface, or with itself if spiral wound.

4,065,114
GUIDE FOR A MOTORIZED CIRCULAR HANDSAW
Charles A. Pennington, 2910 E. Virginia, No. 17, West Covina, Calif. 91790
Filed Dec. 3, 1976, Ser. No. 747,368
Int. Cl.² B25B *3/00*
U.S. Cl. 269—2 **9 Claims**

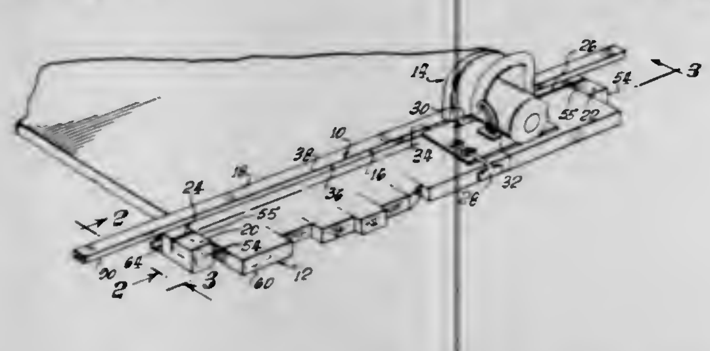

1. Guide means for guiding a saw along a workpiece, the saw having a slide plate with an edge surface thereon which is parallel to the saw line of the saw, said guide means including:
a guide member having a workpiece engaging surface and at least one guiding abutment surface against which the edge surface of the saw slide plate can slide and be guided, said guide member being shaped to define a longitudinal channel therewithin,
a pair of clamp members for retaining said guide member in the desired guiding position on the workpiece, said members each having an end portion adapted to slidingly engage said guide member channel and to be retained thereby, a resilient member adapted to frictionally and forcibly engage the workpiece on the opposite side thereof from said guide member workpiece engaging surface, and means forming a connection between said end portion and said resilient member of said clamp member, said means forming a connection between said end portion and said resilient member including a body portion, said end portion forming one end thereof, a lever arm including means to retain said resilient member thereon, pivot means connecting said body portion and said lever arm, and means to retain said lever arm in desired positions with respect to any body portion, said means to retain said lever arm in desired positions with respect to said body portion including a lock lever having first frictional means thereon,
lock lever pivot means which pivotally restrain said lock lever to said body portion, and
second frictional means on said lever arm in position to be selectively engaged with said first frictional means to enable said lock lever to jam said lever arm in position with its resilient member engaged with the workpiece.

4,065,115
FOLDABLE CUTTING BOARD
Samuel J. Popeil, and Lorenzo Anthony Ruiz, both of Chicago, Ill., assignors to Popeil Brothers, Inc., Chicago, Ill.
Division of Ser. No. 683,479, May 5, 1976, Pat. No. 4,015,330. This application Dec. 13, 1976, Ser. No. 749,606
Int. Cl.² A47J *47/00*
U.S. Cl. 269—16 **19 Claims**

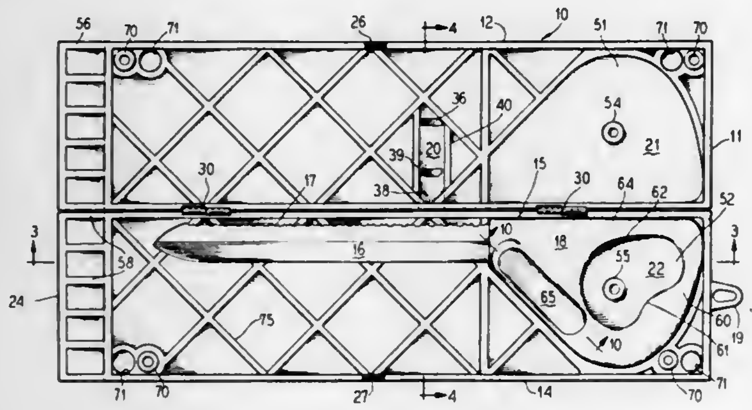

1. A cutting board comprising:
hinged opposed half portions,
a cutting surface formed on correspondingly aligned opposed surfaces of said half portions,
releasable lock means for holding both said half portions together when said half portions are disposed in folded relationship relative to each other,
and latch means for securing said half portions when said half portions are opened in a cutting board configurations,
said latch means having mutual releasing mutual interlocking members one of which traverses said hinged opposed half portions,
whereby, when said cutting board is opened, said half portions lockingly form a rigid cutting surface.

4,065,116
CLAMPING OF BATTERY PLATE BLOCK ASSEMBLIES
Hans-Georg Lindenberg, Hannover; Joachim Illmann, Stelingen, and Hans-Joachim Golz, Hannover, all of Germany, assignors to Varta Batterie Aktiengesellschaft, Hannover, Germany
Filed Sept. 22, 1976, Ser. No. 725,638
Claims priority, application Germany, Dec. 2, 1975, 2554069
Int. Cl. A61g *13/00*
U.S. Cl. 269—22 **11 Claims**

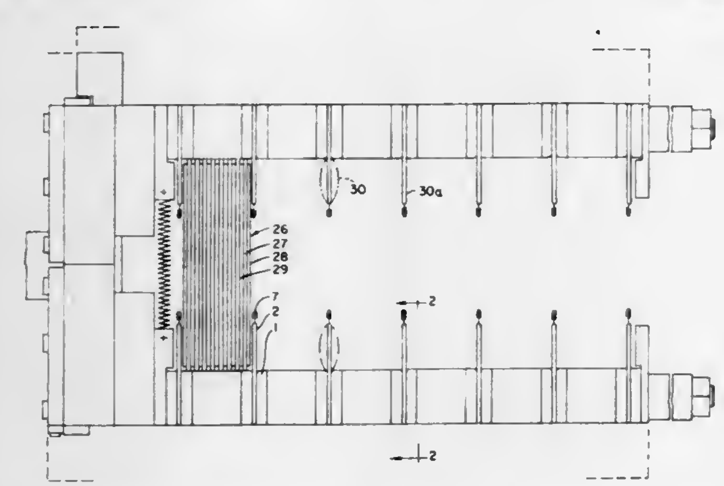

1. Apparatus for clamping together the plate blocks of lead storage batteries, comprising:
at least one clamping element positioned adjacent an outer surface of the block,
the element having generally planar face engaging the block surface,
the element being constructed so that the planar face is pneumatically deformable so as to bulge toward the adjacent block surface, thereby to apply a controllable clamping force to said surface,
the element having a multi-layer construction, including innermost layers formed of an elastic membrane, and resilient plates adjacent portions of the outer surfaces of the membrane, and means for introducing gas under pressure between the innermost layers,
the elastic membrane being responsive to the gas pressure to expand, thereby pressing outwardly against the resilient plates and causing them to bulge and provide the clamping force, and
the element having bulkheads positioned between the membrane and the plates, the bulkheads having cut-outs through which the membrane can bear against the plates.

4,065,117
METHOD AND AN APPARATUS FOR ADDRESSING AND STACKING INDIVIDUAL PIECES OF PRINTED MATTER FOR MAILING, ESPECIALLY MAGAZINE COPIES, BOOKLETS AND OTHER BINDERY ARTICLES
Ivar Thorsheim, Kalkfjellet 15, 1370 Asker, Norway
Filed May 25, 1976, Ser. No. 689,844
Int. Cl.² B65H *39/02*
U.S. Cl. 270—58 **15 Claims**

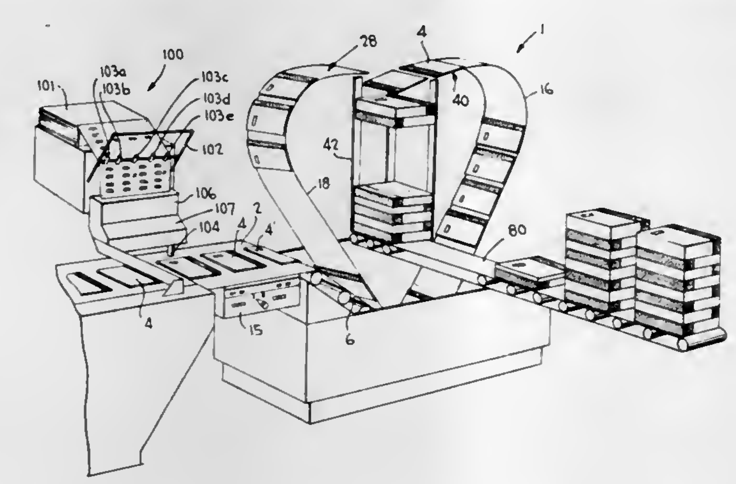

1. A method for addressing and stacking individual pieces of printed matter for mailing, such as sheets of paper, magazine copies, booklets and other bindery articles wherein each mailing piece has a back, comprising the steps of:
a. applying individual address identification data to each mailing piece from computer-processed recording means, the application of the individual address data being accomplished by means of data record-forming means;
b. conveying such labelled mailing pieces one by one to at least one stacking machine, said pieces entering said stacking machine with the address label and the back of each mailing piece oriented in the same way, said stacking machine including a stacking chamber for receiving said articles, first and second conveying means each having an inlet and an outlet, said first and second outlets each associated with a respective opposite side of said stacking chamber, and a shift member adapted for diverting predetermined numbers of pieces to either said inlet of said first conveying means or said inlet of said second conveying means;
c. operating said shift member, the operation of said shift member being in response to a first set of symbol combinations stored at appropriate locations in said computer-processed recording means so as to stack the mailing pieces in batches comprising a selected number of pieces, the backs and the address labels of the pieces of each batch being oriented the same way, but oppositely of the backs of the pieces in an underlying batch, based on the said conveying means on which the pieces are conveyed;
d. operating a selector means for initiating removal of a full pile composed of a plurality of batches of such oriented mailing pieces, the operation of said selector means being in response to a second set of symbol combinations stored at appropriate locations in said computer-processed recording means.

10. Apparatus for stacking individual pieces of printed matter for mailing, such as sheets of paper, magazine copies, booklets and other bindery articles wherein each mailing piece has a back edge, said articles entering the stacking machine one by one oriented the same way and having an address label attached thereto at approximately the same location on each article, said apparatus comprising
a stacking chamber for receiving said articles,
first and second conveying means each having an inlet and an outlet, said first and second outlets each associated with a respective opposite side of said stacking chamber,
a shift member adapted for diverting predetermined number of articles to either said inlet of said first conveying means or said inlet of said second conveying means,
and a selector means for initiating removal of a pile of articles collected in said stacking chamber,
the improvement comprising: means for driving said first and second conveying means at the same conveying speed, said conveying means including uninverted conveying paths for the articles conveyed there along, so that each article conveyed along the first conveying means will be delivered to the stacking chamber with its address label turned downwards and have its back edge facing away from said first outlet, and so that each article conveyed along the second conveying means will be delivered to the stacking chamber with its address label turned upwards and have its back edge facing away from the second opposite outlet,
and the improvement further comprising: a detector means and a control unit, the shift member and the selector means being connected to the control unit for the operation of said shift member and said selector means in response to signals which are generated by the detector means, said detector means being positioned to detect pertinent code data associated with a data bank containing all the address data of the address labels, so as to operate said shift member in response to a first set of code data combinations for thereby stacking articles in batches comprising a selected number of articles all oriented the same way, and so as to operate said selector means in response to a second set of code data combinations for thereby removing a pile composed of a plurality of batches.

4,065,118
MONO-PAGE PAPER DISTRIBUTOR
George M. Dudley, 69 N. Boxwood St., Hampton, Va. 23365
Filed Nov. 29, 1972, Ser. No. 310,617
Int. Cl.² B65H *3/08, 5/10*
U.S. Cl. 271—14 **6 Claims**

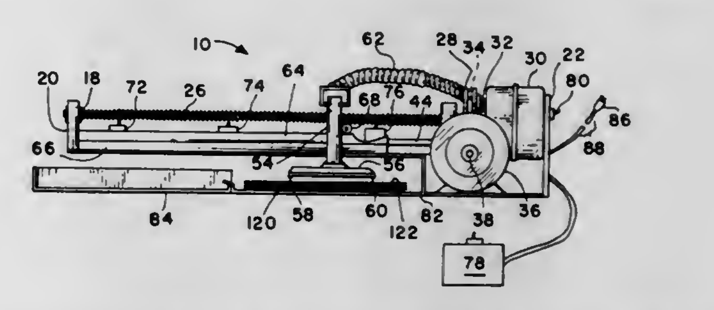

1. An improved device for removing the top sheet from a stack of sheets and transporting said top sheet to a predetermined location comprising:
a stack of sheets including a top sheet;
means for displacing said top sheet thereby separating said top sheet from said stack of sheets;
means for thereafter creating a vacuum, said vacuum means having suction head means associated with said sheet displacing means such that when said top sheet is in the displaced condition said suction means picks up and moves said top sheet from said stack of sheets;

means for transporting said sheet displacing means from said stack of sheets to a predetermined location and back to said stack of sheets; said means for transporting said sheet-displacing means toward and away from said stack of sheets being a rotating threaded shaft on which said sheet-displacing means is threadably mounted;
means for simultaneously controlling the operation of said vacuum means and said transporting means such that when said sheet-displacing means is at said stack of sheets said vacuum means operates and when said sheet displacing means is at said predetermined location, said vacuum means does not operate; and prime mover means for energizing said above-mentioned means.

4,065,119
PROCESS AND APPARATUS FOR TRANSPORT OF ORIGINALS IN A REPRODUCTION APPARATUS
Herbert Schröter, Taunusstein, Germany, assignor to Hoechst Aktiengesellschaft, Germany
Filed Oct. 18, 1976, Ser. No. 732,980
Claims priority, application Germany, Oct. 16, 1975, 2546438
Int. Cl.[2] B65H *29/64*
U.S. Cl. 271—172 **19 Claims**

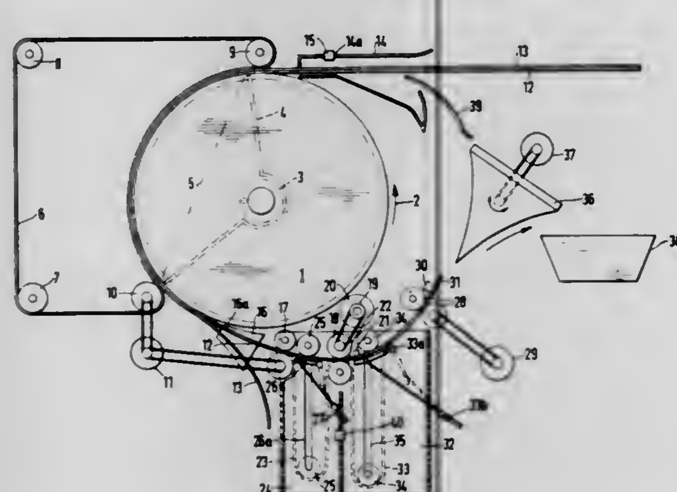

1. A process for the transport through a copier of an original having a leading and a trailing edge, which comprises transporting the original at least once along a path wherein it passes in the stated order a third point, an illumination zone, a fourth point, a first point, a second point and, if transported more than once, the third point, the illumination zone, the fourth point, the first point and the second point again, wherein if the trailing edge has not passed the third point when the leading edge passes the second point the path length between the first and second points is extended and wherein if the trailing edge has not passed the second point when the leading edge passes the first point the path length between the illumination zone and the first point is extended and wherein the speed of the original past the first point is increased relative to its speed in the illumination zone while an extended path is followed between the zone and the first point and after the trailing edge has passed the second point.

4,065,120
COPY PAPER STRIPPING MEANS
Masaru Imaizumi, Shinshiro, and Syotaro Inagaki, Okazaki, both of Japan, assignors to Minolta Camera Kabushiki Kaisha, Osaka, Japan
Filed Oct. 4, 1976, Ser. No. 729,642
Claims priority, application Japan, Oct. 17, 1975, 50-142045; Nov. 5, 1975, 50-151025
Int. Cl.[2] B65H *29/54*
U.S. Cl. 271—174 **14 Claims**

1. In a photocopying machine wherein a sheet of copy paper carrying toner particles defining the image of an original document is passed between a heating roll and a press roll constituting a fuser assembly, whereby said toner particles are fused and fixed in position, copy paper stripping means comprising:
at least one stripper element having a tip portion for contacting the peripheral surface of one of said rolls for effecting detachment of copy paper from said roll;
mounting means for freely rotatably mounting said stripper element about a center of rotation thereof for rotational movement relative to said roll and for movement of said center of rotation in a direction at least partly toward and away from the roll means, and normally positioning the center of rotation of said stripper element in an area intermediate the periphery of said roll and a plane which is

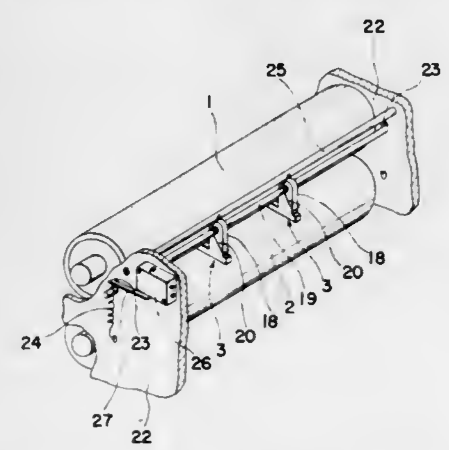

tangential to the periphery of the roll at the line of contact thereof with said tip portion of said stripper element; and
force application means for exerting a force on said stripper element and acting in a first direction and urging said stripper element when it is in the normal position of the center of rotation toward a position wherein said tip portion thereof contacts said roll, said mounting means accommodating movement of said stripper element to a position wherein said tip portion thereof is out of contact with said roll when said stripper element is subjected to a supplementary external force which is greater than said force acting in said first direction and exerted by said force application means.

4,065,121
SHEET DETACHING DEVICE FOR ELECTROPHOTOGRAPHIC COPYING MACHINE
Giorgio Siletto; Piero Bena, both of Turin, and Bruno Cestari, Collegno (Turin), all of Italy, assignors to Ing. C. Olivetti & C., S.p.A., Ivrea (Turin), Italy
Filed Nov. 3, 1976, Ser. No. 738,197
Claims priority, application Italy, Nov. 10, 1976, 69760/76
Int. Cl.[2] B65H *29/56*
U.S. Cl. 271—174 **5 Claims**

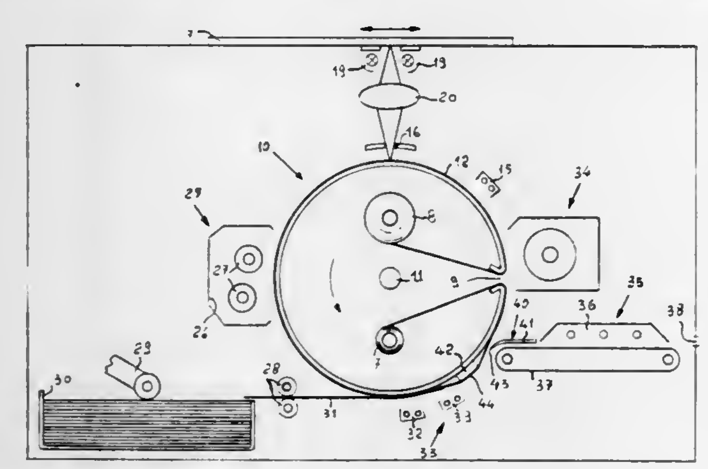

1. Device for detaching a copy sheet held by electrostatic attraction to the photoconductive element carried by the drum of an electrophotographic copying machine comprising:
means defining a radial protuberance in the periphery of the drum between its surface and said element in the zone in which the leading edge of the copy sheet contacts the element,
a pick off finger fixedly mounted adjacent the drum at such a distance as to engage said element only in correspondence with said protuberance, whereby during the rotation of the drum the pick off finger engages the leading edge of the copy sheet and detaches it from the element.

4,065,122
EMERGENCY BRAKE FOR MOVABLE CONVEYOR
Jamshid Rejai, Lindenwold, N.J., assignor to Molins Machine Company, Inc., Cherry Hill, N.J.
Filed July 14, 1976, Ser. No. 705,191
Int. Cl.[2] B65H *29/50*
U.S. Cl. 271—201 **4 Claims**

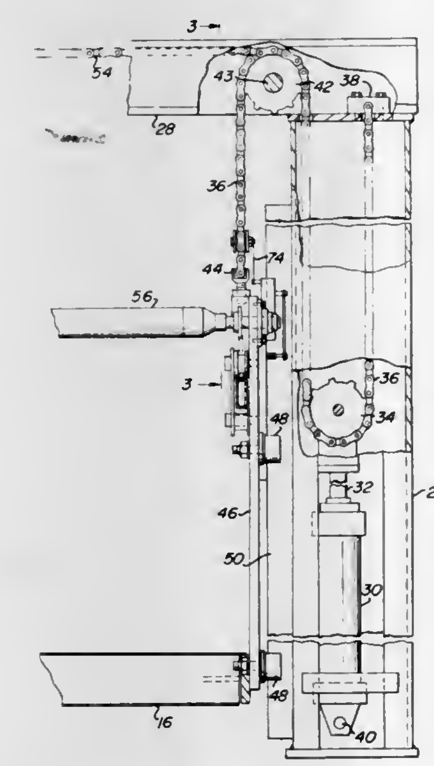

2. Sheet stacking apparatus comprising a stacking conveyor adapted to receive sheets and discharge the same from one end thereof sequentially to form a vertical stack, a standard adjacent the discharge end of said conveyor, the discharge end of said conveyor being coupled to a first end of a chain, a second end of said chain being attached to said standard, said chain being received about first and second rotatable sprockets, said second sprocket being rotatable about a fixed axis and said first sprocket being movable in a vertical direction, power means for lowering said first sprocket and for thereby raising the discharge end of said conveyor in synchronism with increase in the height of the stack, a vertical guide for the discharge end of the conveyor as it is moved vertically, braking means adjacent the discharge end of the conveyor for potential engagement with said guide to arrest accidental descent of the discharge end of said conveyor, restraining means for preventing engagement of said braking means with said guide while said chain is under tension, said restraining means being coupled between said braking means and said chain, and biasing means for urging said braking means toward engagement with said guide when said restraining means is ineffective.

4,065,123
APPARATUS FOR STACKING DOCUMENTS IN SEQUENCE
Fred Victor Arrasmith, San Jose; Donald George Bruns, Saratoga; John Stuart Moffitt, San Jose, and Stanton Kline Moss, Gilroy, all of Calif., assignors to International Business Machines Corporation, Armonk, N.Y.
Filed Dec. 2, 1976, Ser. No. 746,760
Int. Cl.[2] B65H *31/06*
U.S. Cl. 271—215 **20 Claims**

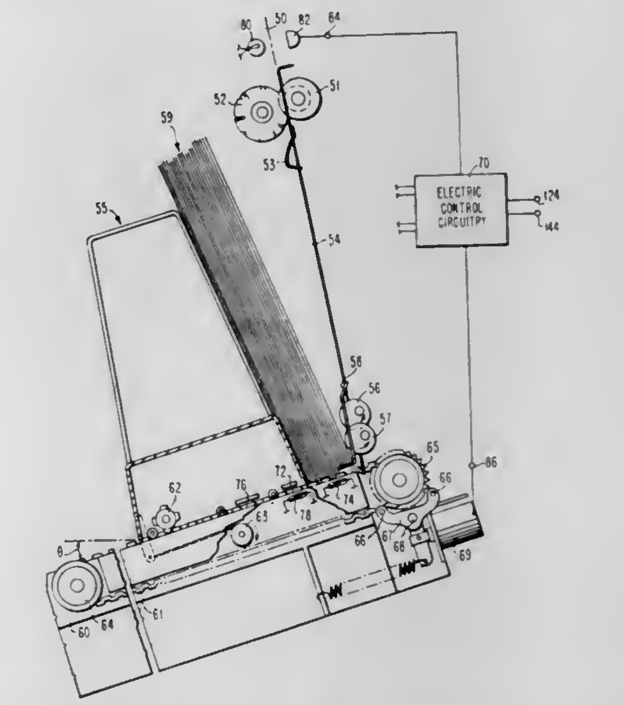

1. Apparatus for stacking documents in sequence, comprising
a bed assembly on which said documents are to be stacked,
a backstop assembly slidably arranged on said bed assembly,
a backplate assembly arranged at one side of said backstop assembly,
electric circuit components on said bed assembly and on said backstop assembly arranged at a spacing proportional to a predetermined initial increment of stacking space located between said backplate and said backstop assemblies,
a sensing assembly for detecting the entrance of a document into the space between said backstop and backplate assemblies,
an escapement assembly arranged on said bed assembly and coupled to said backstop assembly for alternatively fixing and freeing said backstop assembly with respect to said bed assembly and having an electric control element for actuating said escapement assembly,
an electric control signal generating circuit arrangement having input terminals connected to said electric circuit components, output terminals connected to said escapement control element, and other input terminals connected to said sensing assembly, and
circuitry intermediate said terminals for counting a series of said documents entering the stacking space between said backstop assembly and said backplate assembly within said initial increment of stacking space, for storing said count for use in each succeeding incrementing of said backstop assembly, and for actuating said escapement assembly for subsequent incrementing of said backstop assembly along said bed assembly.

4,065,124
HIGH-BOUNCE AMUSEMENT AND EXERCISE AIR BAG
Michael F. Egan, 16 Rose St., Timonium, Md. 21204
Filed July 29, 1976, Ser. No. 709,604
Int. Cl.[2] A63B *5/00*
U.S. Cl. 272—65 **2 Claims**

1. In an amusement and exercise air bag for one or more players, the improvement comprising: a rounded air bag body

having generally planar upper and lower surfaces; bellows structure, the bellows structure having pneumatic connection with the air bag body at the upper central portion of the air bag body, comprising the bellows structure being generally inverted-cup-shaped with the lower periphery having sealing connection at an opening in the air bag body for unrestricted passage of air between the bellows structure and the air bag body; the bellows structure being upwardly distendable from

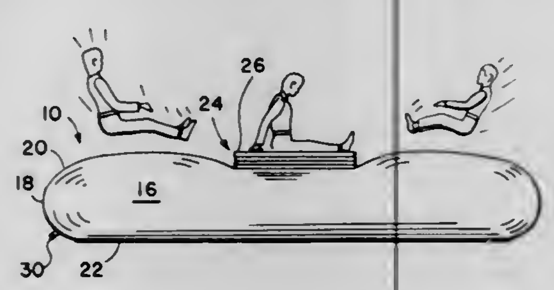

the air bag body upon compression of the air bag body for upwardly projecting a player resting thereon and having associated therewith resilient bellows-retractive structure, the bellows structure having relatively rigid top structure larger in diameter than said lower periphery for preventing the rigid top structure from being pressed below the air bag upper surface, and the air bag body extending as a safety margin around the bellows structure.

4,065,125
MULTIPURPOSE GAME APPARATUS
Peter Chan, Toronto, Canada, assignor to The Raymond Lee Organization, Inc., New York, N.Y., a part interest
Filed Apr. 29, 1977, Ser. No. 792,329
Int. Cl.² A63D *15/04*
U.S. Cl. 273—5 R **1 Claim**

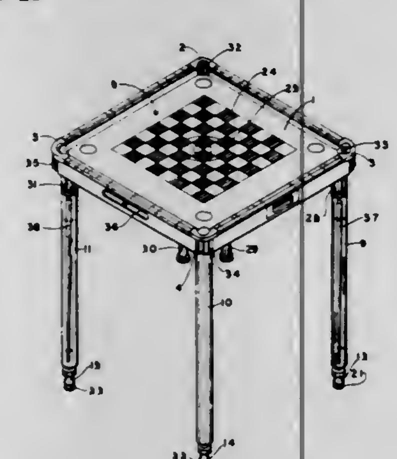

1. Multipurpose game apparatus for billiards, snooker, checkers and chess, said game apparatus comprising
- a table having a table top of substantially square shape with four corners, an oversurface and an undersurface, and a plurality of support legs each threadedly coupled to the table top at the undersurface thereof with each support leg at a corresponding one of the corners, each of the support legs having a support member universally mounted thereon for length adjustment and positioning at the bottom thereof, the upper surface of the table top having a checker board marked thereon and a fouls circle at the center thereof;
- a plurality of short legs a fraction of the length of the support legs each threadedly coupled to the table top at the undersurface thereof in the area of a corresponding corner for supporting the table top a short distance above a supporting surface when the support legs are removed;
- a plurality of pockets formed in the oversurface of the table top each at a corresponding corner thereof;
- a drawer slidably mounted on the undersurface of the table top;
- a plurality of cue sticks;
- clamp means on each of the support legs for releasably supporting the cue sticks on the legs; and
- a plurality of chess disks and checkers removably stored in the drawer.

4,065,126
PRACTICE TENNIS BALL AND APPARATUS
David Mantz, 7950 Henry Ave., Philadelphia, Pa. 19128
Filed June 30, 1975, Ser. No. 591,858
Int. Cl.² A63B *37/12*
U.S. Cl. 273—58 A **3 Claims**

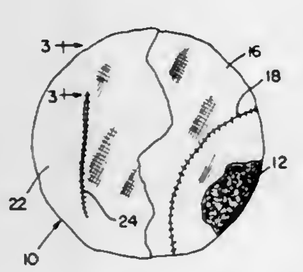

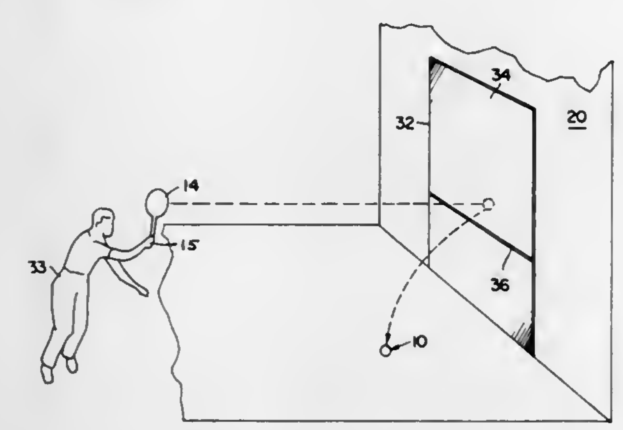

1. A practice playing ball comprising:
- a soft inner core of pliable material;
- an inner fabric cover surrounding and enclosing said inner core, said inner fabric cover being cut and sewn to enclose said inner core in a substantially spherical form;
- a soft knitted fabric outer cover for enclosing said inner cover;
- said soft knitted fabric outer cover having an opening through which said inner core and inner cover can be readily inserted and removed;
- elastic means for securing said outer cover around said inner cover; and
- powdered chalk impregnated in said knitted fabric outer cover. for indicating a contact point of said ball on a surface rebounded thereagainst.

4,065,127
GOLF CLUB GRIP ATTACHMENT
William J. Fagan, 715 Karen Lane, San Antonio, Tex. 78218
Filed July 2, 1976, Ser. No. 702,283
Int. Cl.² A63B *53/14*
U.S. Cl. 273—81 D **1 Claim**

1. In combination a golf club having a hand grip portion on the upper end of the shaft of the club and a head portion on its opposite end and a non-wrapped, exposed grip attachment secured thereto, said grip attachment comprising an elongate body attached to the surface of the grip portion and extending longitudinally therealong, said body being in the form of an isosceles trapezoid in plan and symmetrical on its opposite longitudinally extending sides and having a flat front surface extending along the length of body said, alignment means formed on said body to accommodate the placement of both hands of the player thereon comprising side walls formed on

the longitudinally extending sides of said body, rounded corner portions connecting between the adjoining edges of said side walls and said flat front surface, a bottom end wall defining the lowermost transverse edge of said body and which is spaced upwardly on said grip portion from the lower end thereof, said flat front surface of said body being disposed at an angle of approximately 95° with respect to the leading edge of the head of the club, whereby said alignment means is gripped by both

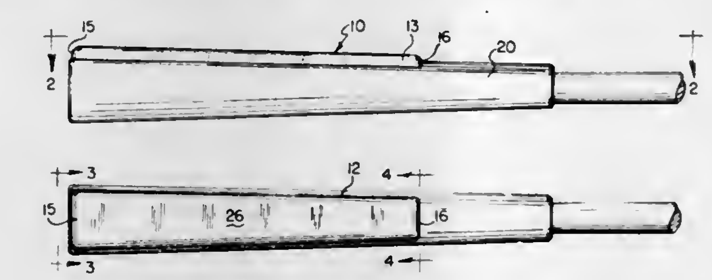

hands of the player such that the side walls and corner portions of the body are oriented in preselected position with respect to the fingers of the player's hand and the thumb of the lower hand is disposed over the bottom wall of said body in predetermined position thereon, said grip being thus effective to regulate the orbit of swing of the hands of the player as he swings the golf club and the consequent direction of flight and distance traveled by the golf ball upon being struck by the golf club.

4,065,128
ELECTRONIC TABLE SOCCER GAME
Alexandre Gomori, 10-12, Rue Arnold Van Gennep, Bourg-la-Reine, France
Filed Nov. 17, 1975, Ser. No. 632,831
Int. Cl.² A63F *7/06*
U.S. Cl. 273—85 D **7 Claims**

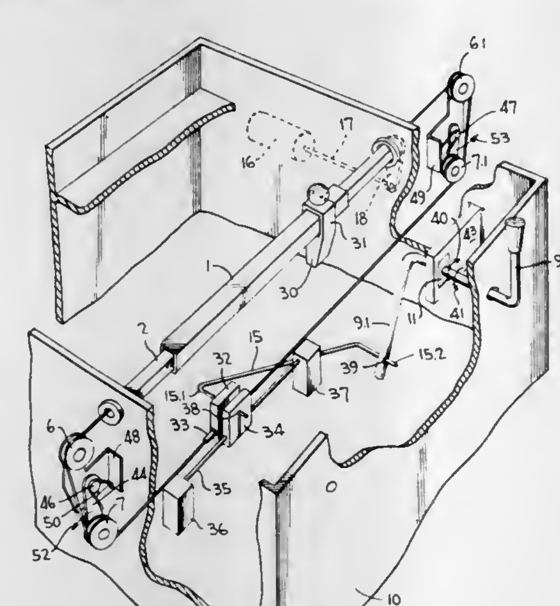

1. In a table game, such as soccer, hockey or the like, including a playing field with goals at either end, across which are arranged a plurality of rows of controllable figurines for maneuvering a ball or disk across said playing field and into an opponent's goal, said game further including means for slidably mounting said rows of figurines on a mounting support bridging side walls of the playing field such that the transverse location of said figurines is mechanically adjustable through control handles operable by players of the game at opposite ends of the playing field, said rows of figurines each further adapted such that, through rotation of the mounting support in response to the operation of a solenoid, the figurines are rotated about a horizontal axis with the lower portion of one of said figurines contacting said ball or disk and propelling said ball or disk in longitudinal directions along said playing field, said solenoid being operable in response to a player closing a switch on the control handle and biased such that after said rotation, the solenoid and figurines return to a vertical orientation, said improvement in said game comprising:
- means for transforming circular movements of each of said control handles into rectilinear movements and for applying said rectilinear movements to a row of figurines;
- restrictor means for limiting rotational movement of said control handles;
- photoelectric control means for counting the number of times said ball or disk is propelled into an opponent's goal; and
- means for automatically returning said ball or disk to said playing field after a goal is scored.

4,065,129
PIN BALL BUMPER MECHANISM WITH ROTATIONAL DRIVE
Stephen Bartok, Rancho Palos Verdes, Calif., assignor to Ideal Toy Corporation, Hollis, N.Y.
Filed Dec. 6, 1976, Ser. No. 747,831
Int. Cl.² A63F *7/10*
U.S. Cl. 273—121 A **25 Claims**

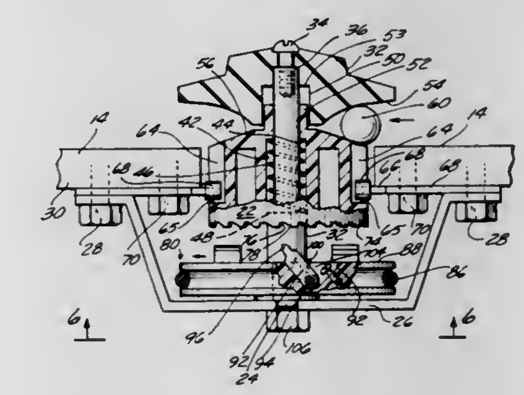

10. A bumper mechanism adapted to be mounted in a pin ball machine having a play surface along which pin balls can be projected, said bumper mechanism comprising first and second bumper elements defining a slot therebetween, means for mounting one of said bumper elements for sliding movement between a first normal position adjacent the other of said bumpers and a second position remote from the other of said bumpers in response to the entrance of a pin ball into said slot; a drive element adapted to be rotatably mounted in said pin ball machine adjacent said bumper elements, and means for rotating said drive element; said one of said bumper elements and said drive element including cooperating means engaging each other in the second position of said one bumper element for driving said one bumper element from its second towards its first position in response to rotation of said drive element, thereby to squeeze a pin ball in said slot and project it from the bumper.

4,065,130
BOARD GAME WITH TIME INDICATOR MEANS
Vincent M. Geraci, 1550 N. Lake Shore Drive, Apt. 3G, Chicago, Ill. 60610
Filed Feb. 23, 1976, Ser. No. 660,050
Int. Cl.² A63F *3/00*
U.S. Cl. 273—130 AB **5 Claims**

1. Apparatus for a game of logic and strategy, said apparatus comprising:
- board means characterized by a plurality of regularly-arrayed playing piece site means;
- a plurality of playing piece means adapted to selectively occupy said playing piece site means; and
- elapsed time indicator means,
- said indicator means activated by placement of one of said playing piece means at a selected one of said playing piece site means,

said indicator means thereby signalling occupation of said selected site means,

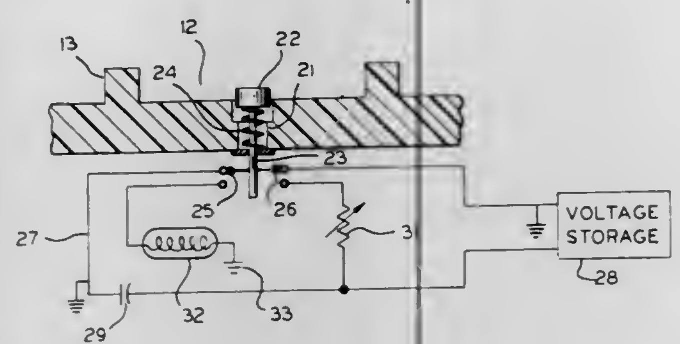

said signalling persisting for a predetermined length of time before ceasing.

4,065,131
BOARD GAME APPARATUS
Richard Thomas Martin, Jr., 10202 Club Creek Drive, No. 308, Houston, Tex. 77036, and David Michael Engert, 2834 Ursulines St., New Orleans, La. 70119
Filed July 12, 1976, Ser. No. 704,230
Int. Cl.² A63F *3/00*
U.S. Cl. 273—134 B **15 Claims**

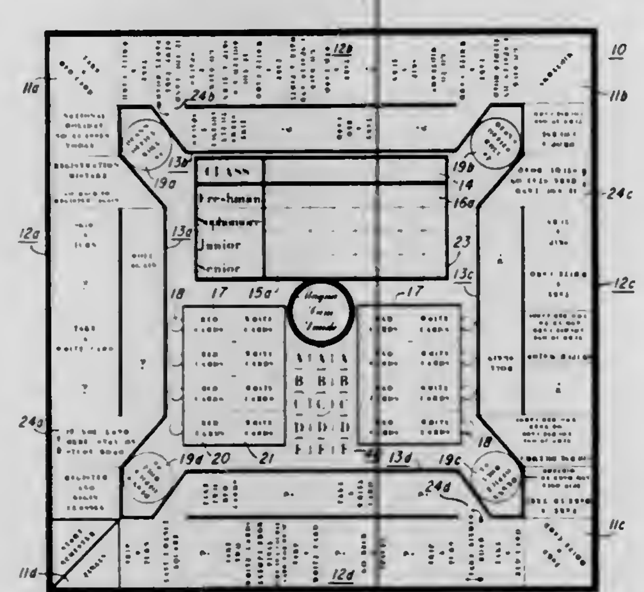

1. A game board apparatus for a plurality of players comprising:
a. a board having first and second alternate paths of travel indicated thereon, wherein:
i. each of said paths consists of a series of spaces representing movement steps,
ii. said first path includes a greater number of spaces than said second path,
iii. a plurality of the spaces of said first path are coincident with a respective plurality of spaces of said second path, and
iv. a plurality of the spaces of said first and second paths are action spaces, each directing that an action be taken by a player landing thereon;
b. action indicator means for specifying a plurality of pairs of actions to be taken by a player in response to landing on one of said action spaces, wherein:
i. the first action of each pair is associated with said first path and the second action of each pair is associated with said second path, and
ii. the first actions are statistically of greater relative benefit and less relative consequence than the second actions; and
c. selection means for indicating which of said plurality of pairs of actions are to be followed when a player lands on one of said action spaces.

4,065,132
MAZE PUZZLE
William Giakas, 2008 Grant Ave., South Plainfield, N.J. 07080
Filed Feb. 17, 1976, Ser. No. 658,762
Int. Cl.² A63F *9/08*
U.S. Cl. 273—153 R **3 Claims**

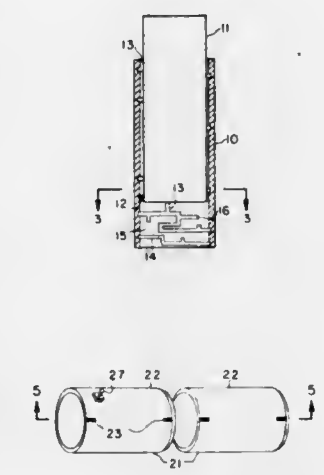

1. An improved maze puzzle of the type wherein there is a cylindrical container whose inner wall has a plurality of spaced raised portions to form horizontal trackways with at least one transverse slot to connect the said trackways, said trackways and transverse slots being disposed to constitute a maze, said maze including a plurality of blind stops and having an axial shaft passing rotatably through end walls attached to the cylindrical container, which axial shaft has a laterally extending arm on said shaft, the outer end of the arm riding in one of the said trackways, wherein the improvement comprises:
a. An inner cylinder, replacing said axial shaft and end walls, dimensioned to telescope within said container, having a laterally extending arm slightly shorter than the depth of the raised portions, and being slideably insertable into the cylindrical container so that the laterally extending arm may ride in said trackway, said cylindrical container consisting of a plurality of segments, having fiduciary marks at each segment end, each segment being insertable into any other segment in random order such that, when the fiduciary marks are aligned, a completed maze puzzle is formed from one end of the assembled segmented cylindrical container to the other

4,065,133
GOLF CLUB HEAD STRUCTURE
Ambrose L. Gordos, 4301 E. 2nd St., Long Beach, Calif. 90803
Filed Mar. 26, 1976, Ser. No. 670,733
Int. Cl.² A63B *53/04*
U.S. Cl. 273—167 E **2 Claims**

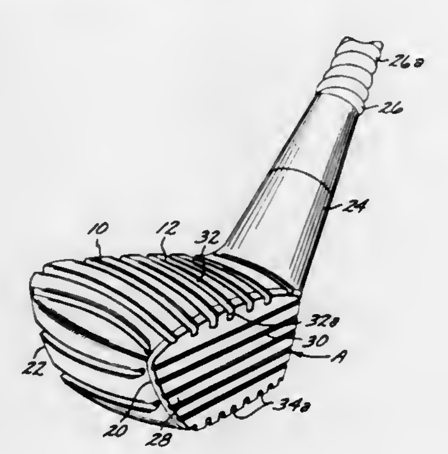

1. In combination with a golf club shaft having a first end portion, a golf club head having a top surface, a flat bottom surface, first and second side surfaces, a flat leading ball striking surface and a trailing surface, and a tubular member that extends upwardly from said golf club head and has said first end portion of said shaft situated within the interior thereof and bonded thereto, said golf club head being characterized by a plurality of spaced substantially parallel grooves defined therein that extend inwardly from each of said top, bottom and second side surfaces and said grooves on said top and bottom surfaces extending from said leading ball striking surface to said trailing surface, with said plurality of grooves as said club is swung having air flowing rearwardly therethrough and acting as directional vanes to maintain said club in a desired arcuate path to minimize twisting of the club and forcing said ball striking surface to remain normal to said arcuate path during impact with a golf ball, and said grooves in said bottom surface lessening the area of the latter that may contact the ground surface just prior to impact with a golf ball, and this lessened bottom surface lessening the frictional drag that results from contact between said bottom surface and ground surface wherein increased kinetic energy is transferred from said golf club heat to said golf ball to drive the latter, with the major portion of said club formed from wood and said ball striking surface defined by a non-metallic plate secured to the leading surface of said wood portion, and said grooves defined in said top and bottom extending through the top and bottom edge portions of said plate.

4,065,134
NEEDLE ASSEMBLIES FOR PHONOGRAPH PICKUP CARTRIDGES
Henry J. Cvetko, and John L. Kuykendall, both of Conneaut, Ohio, assignors to The Astatic Corporation, Conneaut, Ohio
Filed Dec. 2, 1975, Ser. No. 637,078
Int. Cl.² G11B *3/02;* **H04R** *1/18, 17/08*
U.S. Cl. 274—37 **6 Claims**

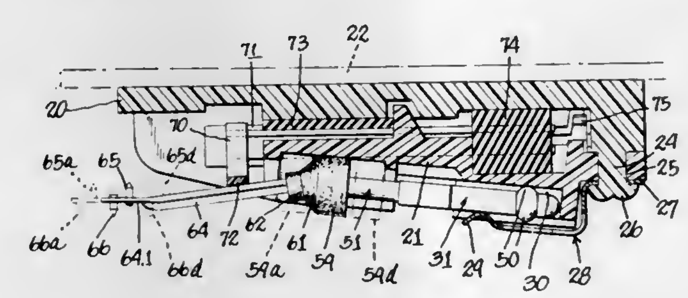

1. In a phonograph cartridge having housing means adapted to be connected to the tone arm of a phonograph, at least one mechanoelectric transducer carried by said housing means and adapted to generate electric signal output when flexed, and a drive member connected to one end of said transducer and extending therefrom, the improvement in a needle assembly for and connectable to said housing means, comprising:
a body to be held to said housing means,
an elongated stud slidable within an opening in said body for longitudinal movement relative thereto and having a free end extending from said body,
a coupler member secured to said stud free end,
a stylus rod having one end connected to said coupler member and having a stylus point at its free end and adapted to engage in a groove in a rotatably supported phonograph record and thereby cause movement of said stylus rod, said stylus rod being adapted to be engaged by said drive member whereby movement of the former causes flexing of said transducer,
longitudinal movement of said stud relative to said body causing corresponding longitudinal movement of said stylus rod,
whereby when said needle assembly is connected to said housing means, said drive member may be engaged with said stylus rod at various positions along the length of the latter,
said body opening having a series of spaced grooves, and said stud having a detent seatable within a selected groove, whereby to releasably hold said stylus stud in a desired position.

4,065,135
TURNTABLE FOR RECORD DISC
Robert L. Doughty, 36 Sylvan Ave., West Hartford, Conn. 06107
Filed June 17, 1976, Ser. No. 697,197
Int. Cl.² G11B *3/60*
U.S. Cl. 274—39 R **5 Claims**

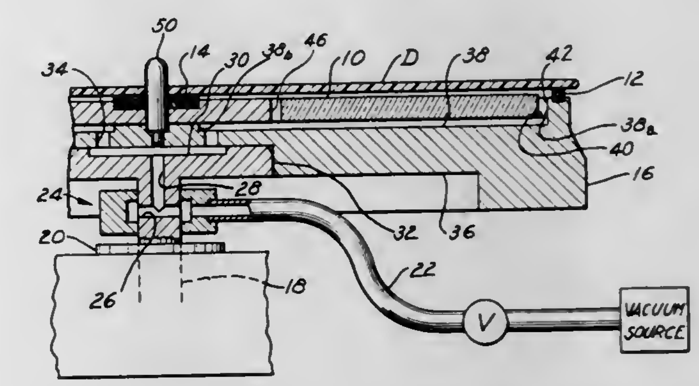

1. A turntable for relatively thin flexible phonographic record disc having recording grooves formed in both sides thereof, said turntable having a center locating pin and resilient means surrounding said locating pin, annular resilient means supporting the disc adjacent its periphery, an annular platen of inflexible impervious material having a flat rigid uninterrupted upper surface spaced below the underside of the flexible record disc when the disc is in a first position supported by said resilient means, a source of vacuum, turntable structure defining an annular cavity of greater radial extent than that of said annular platen and having a floor supporting said inflexible impervious platen, and said turntable structure defining internal passageways which communicate with radially extending grooves in the floor of said annular cavity, means rotatably supporting said turntable structure, fluid coupling means providing communication between said internal passageways defined by said turntable structure and said vacuum source, said turntable structure cavity having an outer wall defining annular opening means between said cavity wall and the outer periphery of said annular platen, and said internal passageways and radial grooves providing communication between said vacuum source and said annular opening means, vacuum at said opening means being adapted to draw the disc downwardly compressing both said resilient means until the underside of the disc abuts said flat rigid upper surface of said inflexible impervious platen.

4,065,136
SHAFT SEAL ASSEMBLY FOR A ROTARY MACHINE
William H. Miller, Jr., Bethlehem, and Carl H. Geary, Greensburg, both of Pa., assignors to Carrier Corporation, Syracuse, N.Y.
Filed Jan. 21, 1977, Ser. No. 761,093
Int. Cl.² F16J *15/42*
U.S. Cl. 277—3 **6 Claims**

1. In a fluid shaft seal assembly for use in a rotary machine wherein the working fluid contained within the machine is prevented from escaping about the shaft by a high pressure fluid barrier maintained between the shaft and the machine frame, the improvement comprising:
a seal member encircling said shaft and comprising a pressure breakdown bushing for throttling the seal fluid from an injection region of high pressure to a region of lower pressure as the fluid moves between the shaft and the bushing, and a seal ring integrally connected to said bushing to prevent the working fluid of said rotary machine from escaping into said low pressure region, said breakdown bushing of said seal member including an axially extending constant diameter step portion adjacent to said high pressure injection region and spaced from said shaft a relatively small distance to define therebetween a restircted flow path for said high pressure fluid moving from said injection region toward said low pressure region, the

flow of fluid through said restricted flow path developing a radially acting hydrostatic force on the surface of said step portion, with the center of gravity of said seal mem-

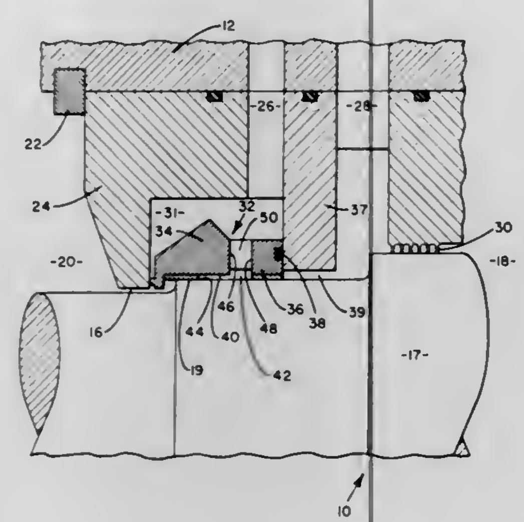

ber being located above the center of said step portion whereby the hydrostatic force developed on said step portion radially centers said seal member with respect to said shaft.

4,065,137
PLASMA-PROCESS VACUUM SEAL
Werner Rueggeberg, and Joseph J. Wiker, both of Lancaster, Pa., assignors to Armstrong Cork Company, Lancaster, Pa.
Filed Aug. 24, 1976, Ser. No. 717,109
Int. Cl.² F16J *15/14*
U.S. Cl. 277—34 **5 Claims**

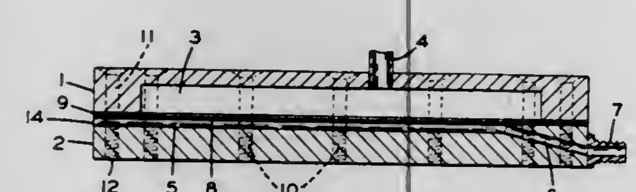

1. A vacuum seal adapted to permit continuous passage of filamentous material therethrough to a vacuum system, said seal comprising:
a. a first rigid body member having at least one substantially flat surface with a fluid-receiving chamber extending inwardly therefrom;
b. a second rigid body member having at least one substantially flat surface with a longitudinal groove therein extending from one end of the body to a point spaced inwardly from the other end thereof;
c. means for fastening said body members together with said chamber and said groove in opposed relation to each other;
d. a flexible membrane positioned between the body members and covering said chamber and said groove;
e. means on said first body member in communication with said chamber for supplying fluid under pressure thereto;
f. attaching means on said second body member for attaching said seal to a vacuum system; and
g. means connecting said groove to said attaching means so that the material may pass from the groove through said connecting and attaching means into the vacuum system.

4,065,138
METAL MESH STRIP AND EMBEDDED FIN GASKET FOR SHIELDING AGAINST ELECTROMAGNETIC INTERFERENCE
John Severinsen, Middletown, N.J., assignor to Metex Corporation, Edison, N.J.
Filed Mar. 7, 1977, Ser. No. 774,805
Int. Cl.² F16J *15/00*
U.S. Cl. 277—230 **22 Claims**

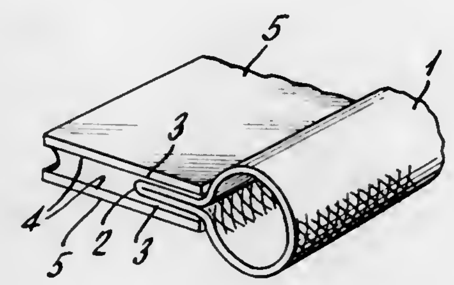

1. A gasket comprising a tubular metal wire mesh strip having a longitudinal fin; said fin being surrounded by a thin flexible layer; said layer having two major faces that are generally flat and parallel to said fin; a thin, generally-flat, flexible ribbon affixed to one of said faces, said ribbon being at least as stiff as said layer; the fin, the layer, and the ribbon forming a flexible member which is thinner than the diameter of the tubular portion of the metal mesh strip.

4,065,139
DRILL CHUCK
Günter Horst Röhm, Heinrich-Rohm-Str. 50, Sontheim, Germany (7927)
Filed July 9, 1976, Ser. No. 704,045
Claims priority, application Germany, July 29, 1975, 7524037
Int. Cl.² B21B *31/04*
U.S. Cl. 279—62 **2 Claims**

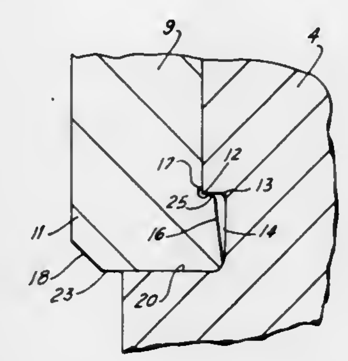

2. A method of assembling a chuck comprising the steps of:
forming a sleeve with an internal circumferential groove spaced from a forward end thereof;
fitting said sleeve over an externally toothed ring having an external circumferential groove defined between a rearwardly-facing flank and a forwardly-facing flank constituting a shoulder having an edge so that said end rests against said rearwardly-facing flank and said internal groove is juxtaposed with said shoulder, said ring being mounted on a chuck body for actuation of chuck bodies carried thereby; and
upsetting said end of said sleeve into said external groove, thereby substantially enclosing said edge in said internal groove.

4,065,140
SKI SEAT
Louise G. Cadwalader, P.O. Box 135, Homewood, Calif. 95718
Filed Jan. 27, 1976, Ser. No. 652,668
Int. Cl.² A63C *11/00;* **A47C** *9/10*
U.S. Cl. 280—11.37 E **8 Claims**

1. A portable seat to be suspended between a pair of ski poles

comprising a narrow elongated fabric web having a pocket formed at each end of the web facing toward the center, said fabric web comprising essentially a flattened tube having two layers of superposed fabric material, the two layers of material being formed together across their entire width along a short length of the respecting opposite ends of web to define the

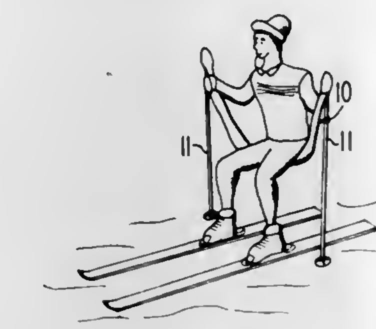

bottom of the respective pockets at each end, a pair of slits being produced in one layer of said fabric to provide access to the interior of each of the respective pockets to thereby permit the pockets to receive the upper extremities of the ski poles to suspend the medial portion of the web between the pair of poles.

4,065,141
BULK MAIL CONTAINER
James D. Wilson, Newport Beach, Calif., assignor to Banner Metals Div. of Intercole Automation, Compton, Calif.
Continuation-in-part of Ser. No. 688,143, May 20, 1976, abandoned. This application Dec. 13, 1976, Ser. No. 749,732
Int. Cl.² B62B *11/00*
U.S. Cl. 280—33.99 H **6 Claims**

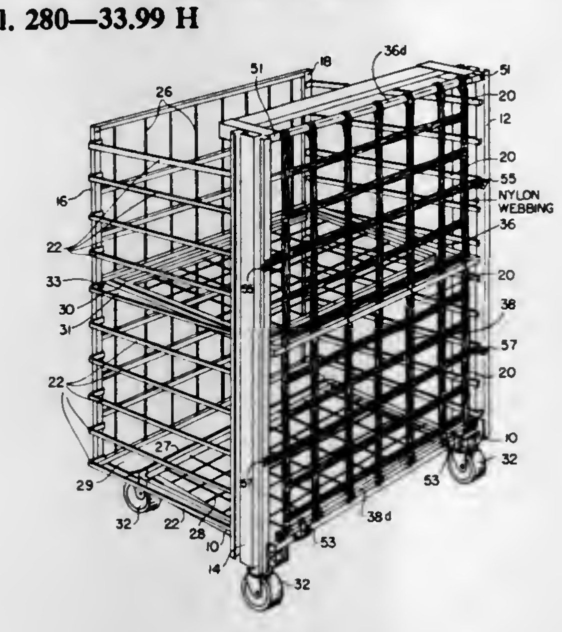

1. A container for bulk mail, and the like comprising: a lower U-shaped horizontal frame having a rear member and side members which diverge outwardly from the rear member and which define an open front; a plurality of spaced and parallel upright posts mounted on the frame at the front and rear thereof; a rectangular-shaped intermediate shelf; a rectangular-shaped intermediate frame surrounding said intermediate shelf, said intermediate frame having a forward edge and a rear edge and being upwardly turnable from a generally horizontal position to an upright position to permit other like containers to be received in the open front of the container; means pivotally mounting the rear end of said intermediate shelf and of said intermediate frame to the posts at the rear of said horizontal frame to permit the intermediate shelf and the intermediate frame to be upwardly turnable from a generally horizontal load-supporting position to an upright position; bracket means mounted on the posts at the front of the horizontal frame to support the intermediate frame in a generally horizontal position; and upper and lower gate members to the forward edge of the intermediate frame to be adjustable to positions enclosing the open front of the container when the intermediate frame is turned down to its generally horizontal position in which the upper gate encloses the area above the intermediate frame and the lower gate encloses the area below the intermediate frame.

4,065,142
CHILD SEAT FOR CART
Houston Rehrig, 1401 S. Oak Knoll Ave., Pasadena, Calif. 91109
Filed Apr. 29, 1976, Ser. No. 681,462
Int. Cl.² B62B *11/00*
U.S. Cl. 280—33.99 B **20 Claims**

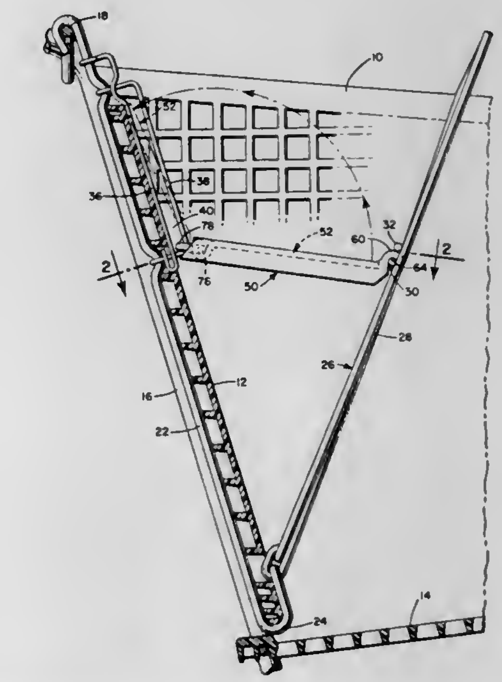

1. A foldable child seat for a grocery cart or the like having a cart rear panel provided with at least one leg opening, and a pair of substantially vertically extending slide wires said child seat comprising:
a movable seat back frame pivotally attached to said cart rear panel and movable between an open position pivoted away from said cart rear panel and a closed position adjacent to said cart rear panel,
a plastic seat panel pivotally attached at its forward edge to said seat back frame and at its rear edge to a rear support wire, said rear support wire being slidably mounted on the slide wires provided on said cart rear panel so that said seat panel can be moved from a generally horizontal position when said seat back frame is in said open position to a generally vertical position when said seat back frame is in said closed position,
a plastic leg opening cover pivotally attached along one edge to said rear support wire and movable when said seat back frame is in its open position between a first position in superimposed relationship with said seat panel and a second position in superimposed relationship with said cart rear panel and covering said leg openings,
said rear edge of said seat panel comprising at least one first extension extending across less than the entire width of said seat panel and having a first recess in each said first extension for accommodating said rear support wire, said first recess opening in a first direction when said seat panel is generally horizontally oriented, said leg opening cover comprising at least one second extension at said one edge extending across less than the entire width of said leg opening cover and having a second recess in each said second extension for accommodating said rear support wire, said first and second extensions being in interdigitating relationship with one another, said second recess opening in a second direction substantially opposite to said first direction when said leg opening cover is in said first position, each one of said second recesses comprising an inner portion in which said rear support wire is accommodated and an entrance portion at least in part having a cross-sectional dimension less than the diameter of said

rear support wire so that said rear support wire must be forced through said entrance portion into said inner portion and is held therein.

4,065,143
FLUID SUSPENSION SYSTEM
Akio Iida, Kawasaki, Japan, assignor to Kabushiki Kaisha Komatsu Seisakusho, Tokyo, Japan
Filed Apr. 14, 1976, Ser. No. 678,593
Claims priority, application Japan, Apr. 14, 1975, 50-49282[U]; Apr. 14, 1975, 50-49283[U]
Int. Cl.² B62D *61/12*
U.S. Cl. 280—43.23 **4 Claims**

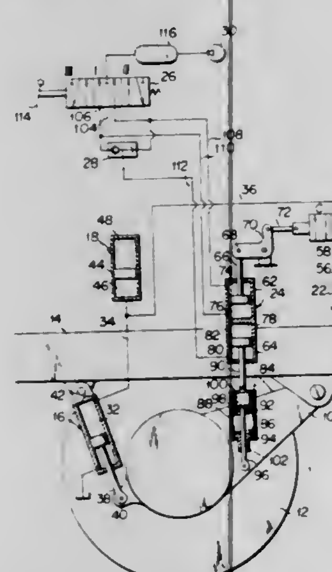

1. In a fluid suspension system for a vehicle having a suspension arm rotatably supporting each wheel of the vehicle adjacent one end and pivotally connected to a vehicle body at another end so as to permit up-and-down motion of the vehicle body relative to the wheel, wherein the suspension system is of the type comprising a cushioning jack operatively connected between the vehicle body and the one end of the suspension arm, an accumulator in constant communication with the cushioning jack, and a first source of fluid under presure for supplying pressurized fluid to the cushioning jack, the combination thereof with:

a. a height control valve operatively connected between said cushioning jack and said first source, said height control valve being normally held in a center position and displaced on actuation to either of two offset positions for communicating said cushioning jack with said first source or with a drain;

b. dual cylinder means comprising:

1. a first fluid actuated cylinder having a piston rod operatively connected to said height control valve for actuating same, said first cylinder having a first rod end chamber and a first head end chamber; and
2. a second fluid actuated cylinder having a piston rod operatively connected to said suspension arm, said second cylinder having a second rod end chamber and a second head end chamber, said second head end chamber being in constant communication with atmosphere;
3. said first and second cylinders being connected to each other with their head ends in opposed relationship;

c. a second source of fluid under pressure; and

d. suspension control valve means for selectively communicating said second source with said first and second rod end chambers or with said first head end chamber and said second rod end chamber and thus for actuating said height control valve to either of said two offset positions, said suspension control valve means having a neutral setting where all said chambers of said dual cylinder means are communciated with atmosphere.

4,065,144
CAMBERING VEHICLE
Frank J. Winchell, Orchard Lake, Mich., assignor to General Motors Corporation, Detroit, Mich.
Filed Aug. 11, 1975, Ser. No. 603,532
Int. Cl.² B60G *19/00*
U.S. Cl. 280—771 **6 Claims**

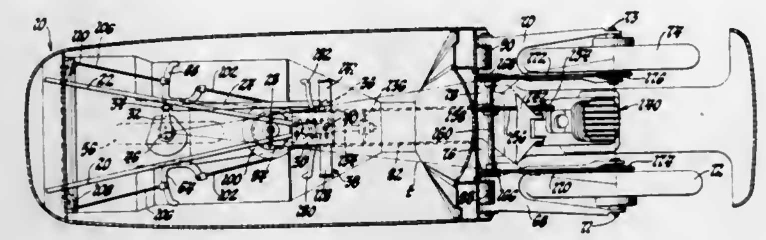

3. A steerable narrow track vehicle having a camber control system independent of steering comprising a vehicle body, steerable wheel means operatively supported by said body for limited turning movement about a substantially vertical steering axis, manual steering means operatively connected to said steerable wheel means for turning said steerable wheel means about said steering axis, a pair of arms extending longitudinally rearwardly from said body, pivot means securing said arms for limited swinging motion with respect to said body independent of said manual steering means, separate road wheel means rotatably mounted on each of said arms adjacent to the free ends thereof, connector cable means operatively connecting each of said arms to each other for equal movement in opposite directions, foot support means for receiving the left and right feet of a vehicle operator operatively connected to said connector cable to permit said operator to actuate said connector means and thereby camber said wheel means and said vehicle, and unitary ride control spring means yieldably urging said connector cable means in one direction to thereby urge said wheels supported by said arms into engagement with a supporting surface.

4,065,145
WHEELED VEHICLE FOR SEMI-AMBULATORY MEDICAL PATIENTS
Carter Carl Chambers, P.O. Box 576, Parker, Ariz. 85344
Filed Mar. 30, 1976, Ser. No. 671,755
Int. Cl.² B62K *3/16*
U.S. Cl. 280—87.02 R **5 Claims**

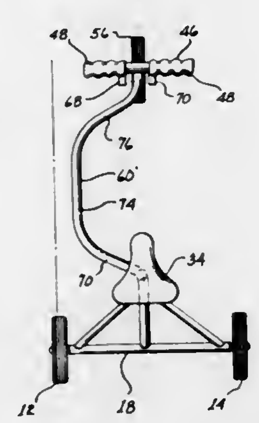

1. A patient vehicle comprising a support component comprising two spaced wheels, a seat, and means for supporting said seat on said wheels; a steering component comprising a wheel having steering means; means connecting said components and defining a center line dividing said vehicle into right and left parts, said means having a portion offset to one side of the center line of the vehicle to allow clearance for the feet of the user; said seat being positioned over the rear portion of said offset portion such that a patient may mount the seat without stepping over said offset portion.

4,065,146
CAMBERING DEVICE FOR CAMBERING VEHICLE
Richard E. Denzer, Bloomfield Hills, Mich., assignor to General Motors Corporation, Detroit, Mich.
Filed Sept. 28, 1976, Ser. No. 727,591
Int. Cl.² B60G *19/00;* **B62K** *15/00*
U.S. Cl. 280—278 **3 Claims**

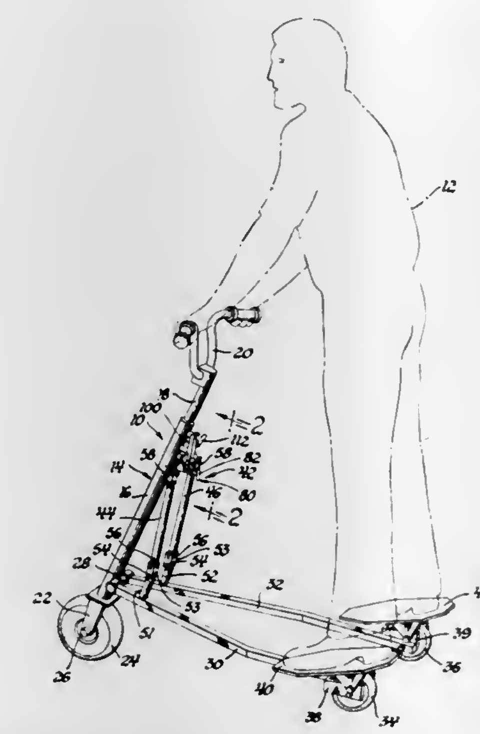

1. In combination with a cambering vehicle having a steering frame provided with a pair of pivotally supported trailing arms, a mechanical cambering device for interconnecting the trailing arms so they move in equal and opposite directions when the vehicle is leaned into a turn, said cambering device including a bell crank comprising a pair of wing members mounted on said steering frame for pivotal movement about a common axis, a pair of links, means pivotally connecting one of said links between one of said wing members and one of said trailing arms, means pivotally connecting the other of said links between the other of said wing members and the other of said trailing arms, each of said wing members having an opening formed therein, a locking pin carried by one of said wing members and adapted to be located in the opening in each wing member for securing said wing members together in a first position wherein said trailing arms are positioned relative to the steering frame for normal operation of said vehicle, a handle connected to said locking pin for removing the latter from the opening in one of the wing members so that the wing members are movable to a second position wherein said trailing arms are located adjacent said steering frame so the vehicle can be stowed in a minimum of space, and a lock device carried by said steering frame and including a pair of jaws for clamping said wing members therebetween and thereby maintaining said bell crank in a fixed position relative to said steering frame when said wing members are in either of said first or second positions.

4,065,147
SYSTEM FOR ALIGNING TRAILER HITCHES
John E. Ross, 1540 Casa Rio Drive, Orlando, Fla. 32807
Filed June 1, 1976, Ser. No. 691,370
Int. Cl.² B60D *1/16*
U.S. Cl. 280—477 **3 Claims**

1. A system for aligning a leading vehicle with a vehicle to be trailed, wherein said leading vehicle is of the type having two rearward windows in a direction facing said trailing vehicle, said system comprising:

a mark on each of said rearward windows of said leading vehicle;
means for changing the dimension of said rod in a first direction toward said leading vehicle;
means for changing the dimension of said rod in a second direction substantially transverse to said first direction;
a rod mounted on said trailing vehicle, said rod dimensioned such that the extremity thereof contacts said window immediately adjacent said indicating means on said rear-

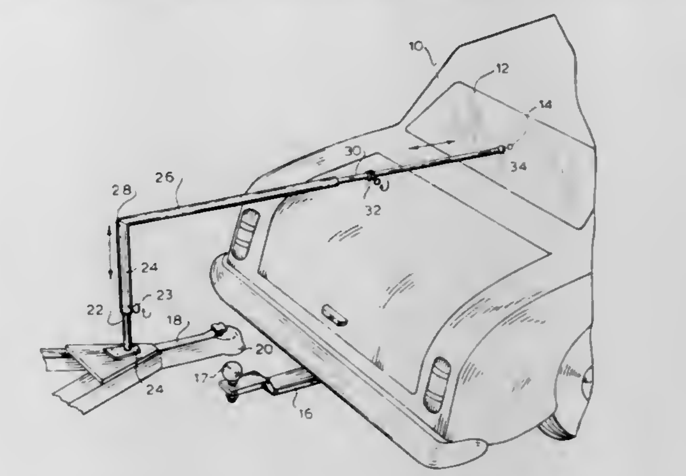

ward window of said leading vehicle when proper alignment of said leading vehicle with said trailing vehicle has been effected; and wherein
said rod includes two arms at said extremity with each arm adapted to contact one of said windows at the corresponding mark on said windows.

4,065,148
ANTI-JACK-KNIFING APPARATUS
László Koroknay, and Janos Urbantsok, both of Budapest, Hungary, assignors to Autoipari Kutato Intezet, Budapest, Hungary
Filed July 13, 1976, Ser. No. 704,946
Claims priority, application Hungary, July 14, 1975, AU 345
Int. Cl.² B62D *53/08*
U.S. Cl. 280—432 **4 Claims**

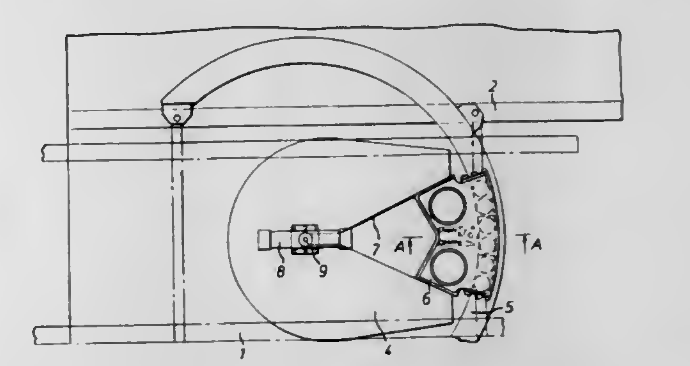

1. An anti-jack-knifing apparatus for an articulated vehicle including two members, namely a tractor (1) and a trailer (2), and a king-pin (3) for articulating said members together, the apparatus comprising a brake disc mechanism arranged coaxially with said king-pin and having cooperating braking elements (5) respectively connected to said tractor and to said trailer; a hydraulic pressure source (8) having a stationary part and a movable part (9), said stationary part being connected to one of said members (1, 2) while said movable part is connected to the other member; two working chambers (14, 15) and a throttle opening (13) being defined in said pressure source to establish throttled flow communication between said chambers; a plurality of brake cylinders (19); ducting connecting said cylinders with said chambers; and a respective controllable throttling valve unit (18*a*, 18*b*) in said ducting, each valve unit including a by-pass duct (17*a*, 17*b*) and a non-return valve (16*a*, 16*b*); wherein said braking elements are constituted by a brake disc formed as an arcuate segment (5) arranged on said trailer and a floating brake calliper (6) sandwiching said disc; and a coupling mechanism (4) on said tractor; a V-shaped groove (7) being defined in said coupling mechanism, and said brake calliper being fixed in said groove.

4,065,149
ANTI-JACKKNIFE APPARATUS
Bernard E. Roth, Barrie, Canada, assignor to Safe Track Manufacturing Limited, Burlington, Canada
Continuation-in-part of Ser. No. 626,146, Oct. 28, 1975, abandoned. This application May 24, 1976, Ser. No. 689,302
Int. Cl.² B62D *53/10*
U.S. Cl. 280—432 **5 Claims**

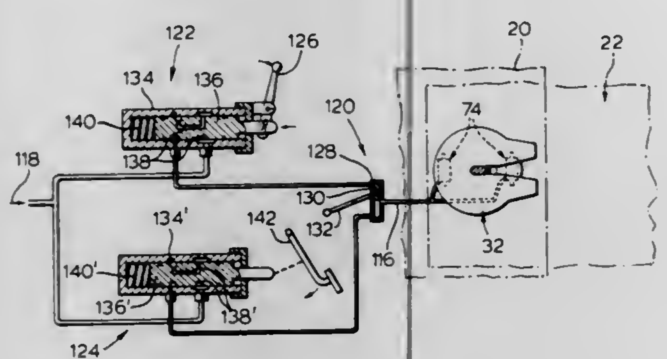

1. A tractor unit having an anti-jackknife apparatus and including:
a fifth wheel formed with a slot to receive a coupling pin on a trailer to be coupled to the tractor unit;
bearing means disposed between the fifth wheel and the tractor unit and adapted to permit the fifth wheel to turn with respect to the tractor unit about an upright axis;
means for preventing a trailer coupled to the tractor unit from turning with respect to the fifth wheel, the trailer and fifth wheel turning together about said axis when the tractor unit is coupled to a trailer and is negotiating a turn in use;
braking means associated with the fifth wheel and including at least one fluid pressure operated actuator adapted to be coupled to a source of fluid pressure independent of the normal road wheel braking circuit of the tractor unit, said braking means being arranged, when operated, to restrict turning of the fifth wheel about said axis and thereby to arrest or prevent uncontrolled swinging of the trailer with respect to the tractor unit; and,
control means for said braking means, said control means including:
a first variable pressure valve which has an input connected directly to said source of fluid pressure, and an output, and which is operable manually under the control of a driver of said tractor unit in use to vary the fluid pressure at said output of the valve;
a second variable pressure valve disposed in parallel with said first variable pressure valve and having an input connected directly to said source of fluid pressure, and an output, and which is coupled to a foot brake of the tractor unit so that the valve is operated in response to operation of the foot brake to vary the fluid pressure at said output of the valve; and,
a selector valve which has an output coupled to said actuator of the braking means, first and second inputs coupled respectively to the outputs of said first and second variable pressure valve, and a valve member which is movable between a first position in which the first input of the selector valve is coupled to said output so that the braking means are controlled exclusively by said first variable pressure valve under the control of a driver of the tractor unit, and a second position in which said second input of the selector valve is coupled to said output and said braking means is operated exclusively by said second variable pressure valve under the control of the foot brake of the tractor unit.

4,065,150
SKI AND METHOD OF MAKING SAME
Richard L. Van Auken, Bridgewater, N.J., assignor to Exxon Research and Engineering Company, Linden, N.J.
Filed Jan. 26, 1976, Ser. No. 652,331
Int. Cl.² A63C *5/12*
U.S. Cl. 280—610 **17 Claims**

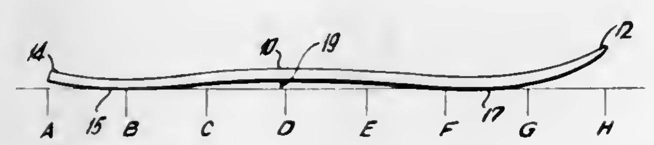

1. A ski comprising a ski body formed from a laminated structural material having a plurality of plies of alternating laminae of reinforcing fibers and elastomer modified syntactic foam, said fibers being continuous glass fibers oriented at 0° and 90° with respect to the longitudinal axis of the ski, said elastomer modified syntactic foam being selected from the group consisting of syntactic epoxy, polypropylene and nylon foams containing about 5 wt. % to 30 wt. % glass microballoons and having a cured density in the range of about 0.75 to 1.0 gm/cc, whereby said ski has viscoelastic properties.

4,065,151
RETRACTABLE SKI BINDING
Burton A. Weinstein, New York, N.Y., and Gordon C. Lipe, Teton Village, Wyo., assignors to National Recreation Industries, Inc., Westport, Conn.
Filed Feb. 27, 1976, Ser. No. 662,108
Int. Cl.² A63C *9/08*
U.S. Cl. 280—618 **14 Claims**

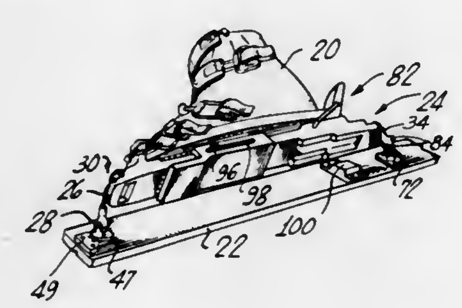

1. A ski binding comprising:
boot-engaging means adapted for detachable connection to a ski boot;
mounting means adapted for attachment to a ski;
leash means for connecting said boot-engaging means and said mounting means and applying a tension force therebetween to yieldably resist separation of said boot-engaging means and said mounting means, said leash means being extendable to permit said boot-engaging means and said mounting means to separate and retractable to draw them back together;
force-transmitting link means mounted on one of said boot-engaging means and mounting means, and coupled to said leash means; and
engagement means on the other of said boot-engaging means and mounting means which engages said force-transmitting link means to vary the effectiveness with which such tension force is applied as a function of leash extension.
8. A ski binding comprising:
boot-engaging means adapted for detachable connection to a ski boot;
leash means for connecting said boot-engaging means to a ski and applying a tension force therebetween to yieldably resist separation of said boot-engaging means from the ski, said leash means including an elongated, flexible cord;
connecting means for attaching said leash means to said ski; and
cooperating means including engagement means carried by said boot-engaging means which engage with a rigid link connected to said cord when said boot-engaging means and ski are in close proximity to one another for enhancing the effectiveness with which said tension force is applied by said leash means between said boot-engaging means and said ski.

4,065,152
UNCOUPLED STRUT SUSPENSION SYSTEM
Alfred D. Bodnar, Pontiac, Mich., assignor to General Motors Corporation, Detroit, Mich.
Filed Aug. 11, 1976, Ser. No. 713,373
Int. Cl.² B60K *17/30*
U.S. Cl. 280—668 **4 Claims**

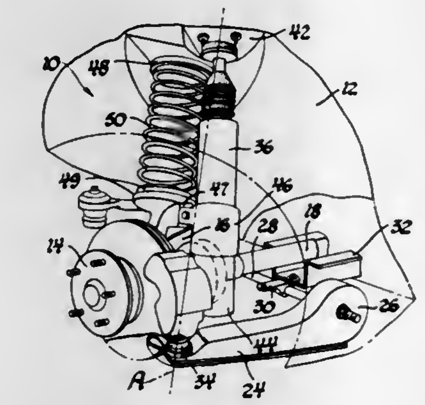

1. A low profile, uncoupled strut suspension system for a motor vehicle having an undercarriage supporting a body, and a road wheel operatively connected to said undercarriage, said system comprising a laterally extending control arm having its inner end pivotally connected to said undercarriage, a steering knuckle pivotally connected to the outer end of said control arm for rotatably supporting said wheel, a vertically oriented shock absorber having its lower end extended adjacent and below the axis of said wheel and secured to said steering knuckle and its upper end pivotally connected to said body at a point which together with the axis of the pivotal connection between the steering knuckle and the control arm defines a predetermined kingpin axis, an upper retainer bracket formed on said body adjacent said upper end of said shock absorber and a lower retainer bracket formed on one of said steering knuckle and said shock absorber members substantially coincident with said kingpin axis for minimizing bending moments across said shock absorber, and a vertically oriented coil spring mounted between said upper and lower retainer brackets, said upper and lower retainer brackets serving to retain the respective ends of said coil spring during turning operations.

4,065,153
VEHICLE WHEEL SUSPENSION ASSEMBLY
William L. Pringle, Grosse Pointe Shores, Mich., assignor to United States Steel Corporation, Pittsburgh, Pa.
Filed Aug. 19, 1976, Ser. No. 715,886
Int. Cl.² B60G *11/12*
U.S. Cl. 280—704 **15 Claims**

1. A vehicle wheel suspension assembly capable of moving a vehicle wheel between a surface-engaging position and a retracted position, said assembly comprising: a support structure, bracket means for attaching said support structure to a vehicle, an arm for rotatably supporting a vehicle wheel, said arm being pivotally connected to said support structure to permit reciprocal movement of said arm in a generally vertical plane, resilient means supported by said support structure, and combined connecting and lifting means connecting the free end of said arm to said resilient means; said connecting and lifting means being movable between a first mode in which the vehicle wheel is in a surface-engaging position and a second mode in which said vehicle wheel is in a retracted position, said connecting and lifting means including a collapsible link connected between the free end of said arm and said resilient means which maintains a fixed distance of separation between the points of connection when said connecting and lifting means is in said first mode and causes a reduction in the distance of separation upon collapse when said connecting and

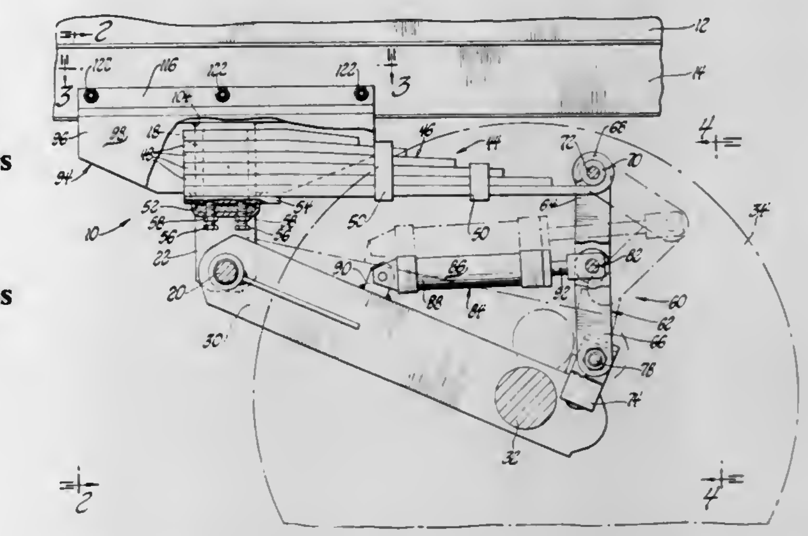

lifting means is moved toward said second mode to move said arm toward resilient means and control means operatively connected to said collapsible link for selectively moving said connecting and lifting means between said first and second modes.

4,065,154
VEHICLE SUSPENSION SYSTEMS
Stanley George Glaze, Brierley Hill, England, assignor to Lucas Industries Limited, Birmingham, England
Filed June 7, 1976, Ser. No. 693,179
Claims priority, application United Kingdom, June 7, 1975, 24595/75
Int. Cl.² B60G *9/00*
U.S. Cl. 280—707 **5 Claims**

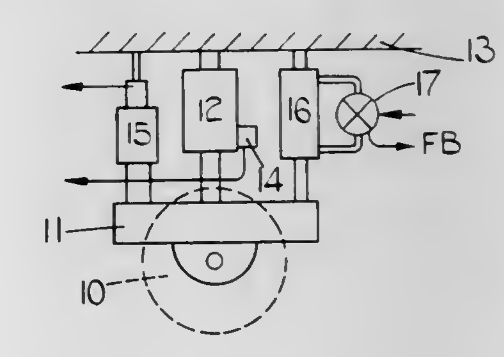

1. A vehicle suspension system comprising a plurality of hydraulic suspension units for respective wheels of the vehicle, electro-hydraulic transducer means associated with each hydraulic suspension unit and producing an electrical output corresponding to the hydraulic pressure in the associated suspension unit, a plurality of wheel velocity transducers associated respectively with the suspension units and each producing an electrical signal corresponding to the velocity of movement of the associated wheel axis relative to the vehicle body, a plurality of damping control valves associated respectively with the respective suspension units and control means for the damping control valves, said control means having inputs from the pressure transducers and the velocity transducers and providing outputs to vary the damping effect of each damping valve so as to establish a desired functional inter-relationship between the pressure and velocity signals, the control circuit including means for generating an electrical signal dependent on the difference between the average velocity sensed by a pair of the velocity transducers associated with a front pair of wheels of the vehicle, and the average velocity sensed by a further pair of the velocity transducers associated with a rear

pair of wheels of the vehicle, a signal generating circuit connected to said signal generating means and producing an electrical output signal corresponding to the desired value of the difference between the front and rear pressure transducer signals, a summing network for combining the signal from the signal generating means with a signal derived from the pressure transducers and means controlled by said summing network for controlling the damping control valves.

4,065,155
BELT RETRACTOR WITH WINDING PREVENTION MECHANISM
Lloyd W. Rogers, Jr., Utica, Mich., assignor to General Motors Corporation, Detroit, Mich.
Filed Dec. 15, 1976, Ser. No. 750,692
Int. Cl.² B60R *21/10*
U.S. Cl. 280—744 **4 Claims**

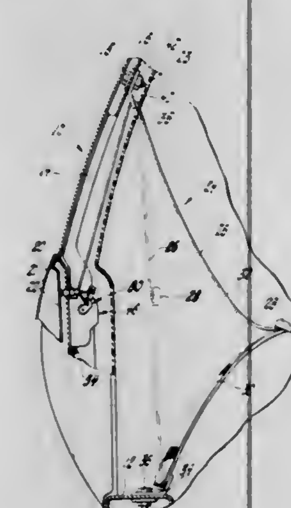

1. In combination, an automotive vehicle having an occupant seat, a restraint belt for restraining an occupant in the seat, a reel having the belt wound thereon, a winding spring urging belt winding reel rotation to retract the belt on the reel and pull the belt taut against the occupant, a locking mechanism effective to prevent belt extension only in response to a sensed acceleration condition so that the occupant may normally lean forwardly in the seat by extending the belt from the reel, a ratchet wheel conneted with the reel for rotation therewith, a pawl selectively engageable with the ratchet wheel to prevent belt winding reel rotation by the winding spring, spring means acting on the pawl and urging the pawl toward engagement with the ratchet wheel, a control member mounted for rotation with the reel and having a cam surface for controlling movement of the pawl into and out of engagement with the ratchet wheel in response to a predetermined sequence of rotation of the control member, said spring means going overcenter upon predetermined movement of the pawl away from engagement with the ratchet wheel so that the spring holds the pawl in a disabled condition irrespective of rotation of the control member to a position which would otherwise engage the pawl with the ratchet wheel, and said control member having cam means thereof adapted to operate the pawl to and from the disabled position.

4,065,156
SEAT BELT SYSTEM
Yutaka Tanaka, Aichi; Yutaka Kondo, Toyota, and Akira Yamanaka, Okazaki, all of Japan, assignors to Toyota Jidosha Kogyo Kabushiki Kaisha, Toyota, Japan
Filed Apr. 12, 1976, Ser. No. 675,782
Int. Cl.² B60R *21/02*
U.S. Cl. 280—747 **1 Claim**

1. A vehicle seat belt system for reducing the effective load impressed upon the seat belt fitting which secures the seat belt retractor means to the vehicle, comprising:

belt means integrally defining a shoulder belt and a lap belt;

a first slip joint secured to the upper part of an interior side wall of a center pillar of said vehicle;

a second slip joint secured to a rocker panel disposed within the floor region of said vehicle;

a tongue plate disposed upon said belt means;

said center pillar extending vertically and being provided with a hollow portion access to which is provided by means of a window defined within said interior side wall of said pillar;

a cover disposed over said window for covering said window;

seat belt retractor means comprising two seat belt retractors disposed within said hollow portion of said center pillar, said retractors being arranged vertically in a series so as to define upper and lower seat belt retractors and being mounted upon a common retractor fitting secured to the surface of said cover which faces said hollow portion of said pillar;

a shoulder belt port defined within the upper part of said cover for permitting said shoulder belt to pass therethrough, and a lap belt port defined within the lower part of said cover for permitting said lap belt to pass therethrough;

said shoulder belt having one end thereof wound upon said upper seat belt retractor which has a belt port defined within the upper part thereof;

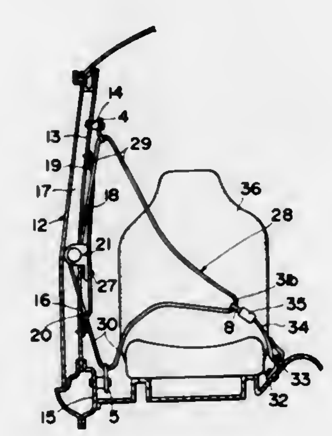

said lap belt having one end thereof wound upon said lower seat belt retractor which has a belt port defined within the lower part thereof;

said shoulder belt extending upwardly from said upper seat belt retractor and through said upper seat belt retractor belt port and said shoulder belt port defined within said cover so as to pass through said first slip joint and extend toward said tongue plate;

said lap belt extending downwardly from said lower seat belt retractor and through said lower seat belt retractor belt port and said lap port defined within said cover so as to pass through said second slip joint and extend toward said tongue plate; and

the other ends of said shoulder and lap belts being passed through said tongue plate,

whereby as a result of said mounting of said two seat belt retractors upon said common fitting, and said upward disposition of said shoulder belt from said upper seat belt retractor to said first slip joint as well as said downward disposition of said lap belt from said lower seat belt retractor to said second slip joint, when said vehicle is suddenly decelerated, forces will be transmitted through said shoulder and lap belts to said common fitting, yet the net effective force impressed upon said common fitting will be equal only to the difference in the magnitudes of said forces transmitted through said shoulder and lap belts.

4,065,157
KNEE PROTECTOR
Fumiyuki Abe; Kazuo Ikawa, both of Yokohama; Mituo Ehama, Yokosuka, and Naoki Ogawa, Yokohama, all of Japan, assignors to Nissan Motor Co., Ltd., Yokohama, Japan
Filed June 1, 1976, Ser. No. 691,942
Claims priority, application Japan, June 6, 1975, 50-76644[U]
Int. Cl.² B60R *21/04*
U.S. Cl. 280—751 **6 Claims**

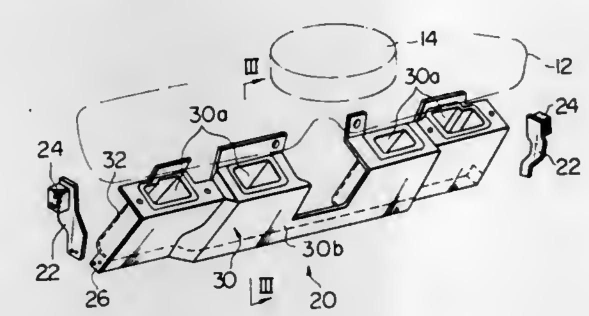

1. A knee protector for protecting knees and legs of a vehicle seat occupant upon collision of the vehicle comprising:

a lateral elongated bottom panel extending between and anchored to both side walls of an occupant space defined by the body of the vehicle, substantially in juxtaposition to the knees of the seated occupant, said bottom panel having a rear end disposed rearwardly relative to the vehicle body,

an upright panel extending substantially upright from the rear end of the bottom panel and having a plurality of laterally spaced openings facing the chest of the seated occupant, and

a plurality of box-shaped crushable elements mounted in the openings in the upright panel, each of said elements extending forwardly of the vehicle body from the upright panel, each of said elements having a generally cenral axis in a vertical plane parallel to the longitudinal axis of the vehicle and substantially parallel to the bottom panel, each of said elements having an opening in alignment with the corresponding one of said openings in the upright panel, said elements being collapsible by the knees of the occupant upon collision of the vehicle.

4,065,158
RECORDING SHEET FOR FORMING INTENSELY COLORED IRIDESCENT INDICIA
Chester Davis, 415 E. Fifth St., Newport, Ky. 41071
Filed Feb. 13, 1975, Ser. No. 549,706
Int. Cl.² B41L *1/36;* **B41M** *5/12, 5/16*
U.S. Cl. 282—27.5 **18 Claims**

1. A recording sheet comprising, a colorless base web having a substantially white surface coating comprising,

an iridescent pigment of the type comprising an essentially transparent micaceous substrate having thereon at least one optical interference overcoating of an essentially transparent material having a refractive index over about 2.0 and characterized by an interference reinforced wave band reflected back from the optical interference overcoating,

and an organic solvent-free binder for said iridescent pigment.

13. A manifolding system comprising

a receiving sheet having an upper surface with a coating thereon comprising

an iridescent pigment of the type comprising an essentially transparent micaceous substrate having thereon at least one optical interference overcoating of an essentially transparent material having a refractive index over about 2.0 and characterized by an interference reinforced wave band reflected back through the optical interference overcoating,

and a binder for said pigment,

and a transfer sheet having a reverse surface with a coating thereon comprising an encapsulated dye solution, said solution having an absorption band complementary to the interference reflection color of the iridescent pigment,

said transfer sheet being arranged so that pressure on the top surface transfers the dye solution to the receiving sheet surface, thereby forming an intensely colored iridescent indicia.

14. A manifolding system comprising

a receiving sheet having an upper surface with a coating thereon comprising

a mixture of

at least 25% of an iridescent pigment of the type comprising an essentially transparent micaceous substrate having thereon at least one optical interference overcoating of an essentially transparent material having a refractive index over about 2.0 and characterized by an interference reinforced wave band reflected back through the optical interference overcoating,

and up to 75% of a water-insoluble diluent material, said diluent material being transparent and having a refractive index less than 1.8,

and a binder for said mixture,

and a transfer sheet having a reverse surface with a coating thereon comprising an encapsulated dye solution, said solution having an absorption band complementary to the interference reflection color of the iridescent pigment,

said transfer sheet being arranged so that pressure on the top surface transfers the dye solution to the receiving sheet surface, thereby forming an intensely colored iridescent indicia.

17. A manifolding system comprising

a receiving sheet having an upper surface with a coating thereon comprising

a mixture of

an iridescent pigment of the type comprising an essentially transparent micaceous substrate having thereon at least one optical interference overcoating of an essentially transparent material having a refractive index over about 2.0 and characterized by an interference reinforced wave band reflected back from the optical interference overcoating,

and up to about 5% by weight of a solvent soluble organic coloring matter present in the form of finely divided particles, said organic coloring matter having an absorption band complementary to the interference reflection color of the iridescent pigment,

and an organic solvent free binder for said mixture,

and a transfer sheet having a reverse surface with a coating thereon comprising an encapsulated solvent for the finely divided particles,

said transfer sheet being arranged so that pressure on the top surface thereof transfers the solvent for the particles to the receiving sheet where it dissolves the particles and spreads the said coloring matter over the iridescent pigment thereby forming an intensely colored indicia.

18. A self-contained substantially colorless recording sheet comprising a colorless base web having thereon a coating comprising

a mixture of

an iridescent pigment of the type comprising an essentially transparent micaceous substrate having thereon at least one optical interference overcoating of an essentially transparent material having a refractive index over about 2.0 and characterized by an interference reinforced wave band reflected back from the optical interference overcoating,

and up to about 5% by weight of an encapsulated dye solution of an organic coloring matter, said solution having an absorption band complementary to the interference reinforced reflection wave band of the iridescent pigment,

and an organic solvent-free binder for said mixture.

4,065,159
ROTARY CONNECTOR
Pierre Leroy, Saint-Germain-en-Laye, and Emile Sprunck, Moyeuvre-Grande, both of France, assignors to E. Sprunck, Moyeuvre-Grande and Creusot-Loire, Paris, both of, France
Filed Jan. 9, 1976, Ser. No. 647,766
Claims priority, application France, Jan. 22, 1975, 75.01925
Int. Cl.² F16L *27/08*
U.S. Cl. 285—136 **12 Claims**

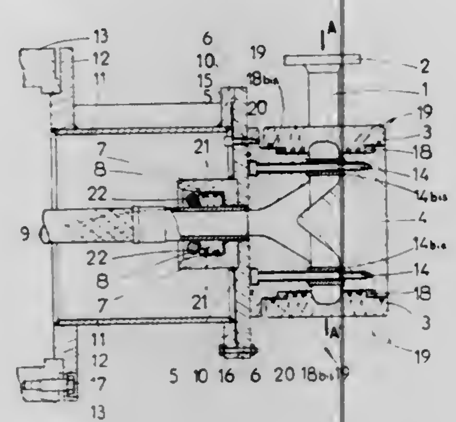

1. A rotary connector for connecting a fixed pipe to a movable pipe for fluid flow therebetween, the connector comprising a cylindrical stator having an inlet for supplying fluid thereto tangentially of the axis of said stator and adapted to be coupled to the fixed pipe, and a rotor projecting within said stator and rotatable about the axis of said stator, said rotor having an outlet extending in a direction perpendicular to the plane of said tangential inlet and connectable to the movable pipe, the rotor comprising a plurality of demountable parts, said stator having an inner surface and being provided, on its inner surface, with oppositely directed shoulders, said rotor comprising first and second main bodies received by said stator and abutting the respective shoulders on said stator, said bodies having spaced opposed faces between which said inlet opens and which faces are shaped to cause fluid to flow in the direction of said axis, said outlet being formed in said second body, means for releasably connecting said first body to the second body and means for sealing the joint between said first and second bodies and said stator.

4,065,160
ANTI-VANDALISM LOCK DEVICE FOR PANIC-TYPE DOORS
David D. Gilmore, Jr., 129 Miller Road, Kingwood, W. Va. 26537
Filed Dec. 13, 1974, Ser. No. 532,619
Int. Cl.² E05C *19/18*
U.S. Cl. 292—92 **9 Claims**

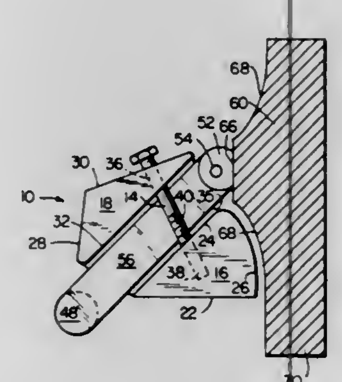

1. A lock device for use upon a panic-type door assembly which includes a transversely extending panic-bar pivotably supported by means of pivotable lever arms operatively connected in a locking assembly of said door and which is adapted to be depressed downwardly for actuating a locking mechanism disposed within said locking assembly, comprising:

means adapted to be secured to one of said pivotable lever arms and interposed between said one of said pivotable lever arms and said locking assembly of said door for preventing pivotable movement of said one of said pivotable lever arms and consequent actuation of said locking mechanism disposed within said locking assembly of said door as a result of a downward depression of said panic-bar; and p1 fastener means secured within said means for fixedly securing said means upon said one of said pivotable lever arms.

4,065,161
CONTAINER OR PANEL CLAMP
Edward MacMaster, New Milford, N.J., assignor to Rexnord Inc., Milwaukee, Wis.
Continuation of Ser. No. 476,049, June 3, 1974, abandoned. This application Sept. 22, 1975, Ser. No. 615,164
Int. Cl.² E05C *5/00*
U.S. Cl. 292—113 **4 Claims**

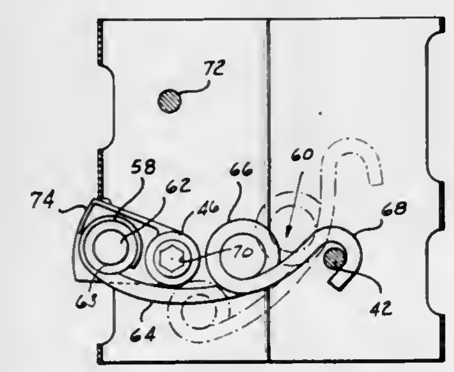

1. A fastener assembly for securing a first member in assembled relationship with a second member which carries a strike including in combination, a first member having a pair of side walls formed with respective trunnion-receiving openings; an arm, a first hub on said arm, and trunnions on the ends of said hub received in said trunnion-receiving openings for mounting said arm on said first member for pivotal movement around a first axis between a first position and a second position, a drawhook of resilient material, said drawhook being formed with a complete loop intermediate the ends thereof, a hook at one end of said drawhook for engaging said strike, a second hub on said arm at a location spaced from said first hub, and a loop adjacent to the other end of said drawhook received by said second hub for mounting said drawhook on said arm for movement around a second axis spaced from said first axis and for movement between a retracted position corresponding to the first position of said arm and a latching position of said drawhook corresponding to the second position of said arm and in which latching position said second axis occupies a beyond-dead-center position with respect to said first axis, the arrangement being such that a plane perpendicular to said first and second axes extends through a portion of said drawhook mounting means and said loop adjacent to said arm mounting means in the latching position of said drawhook and flange acting interengageable flange on said arm abutting said drawhook in intermediate positions of said arm and said drawhook for moving said drawhook fully to its retracted position as said arm moves from its second position to its first position.

4,065,162
LOCK STRIKE CONSTRUCTION
Ernest L. Schlage, Burlingame, Calif., assignor to Schlage Lock Company, San Francisco, Calif.
Filed Sept. 20, 1976, Ser. No. 724,929
Int. Cl.² E05C *21/02*
U.S. Cl. 292—340 **5 Claims**

1. A lock strike construction for use with a wall having an upright structural cripple and an upright door casing side rail parallel to and separated from said cripple by an intervening space comprising an elongated planar plate having a longitudinal axis, means defining an elongated bolt opening entirely enclosed in said planar plate and extending along and substantially symmetrical with said axis, means forming a pair of screw-receiving circular holes in said planar plate on said axis and on opposite ends of said bolt opening, means forming a pair of screw rod holes in said planar plate both on one side of said axis and on opposite ends of said bolt opening, a pair of screw rods in said screw rod holes and extending through said side

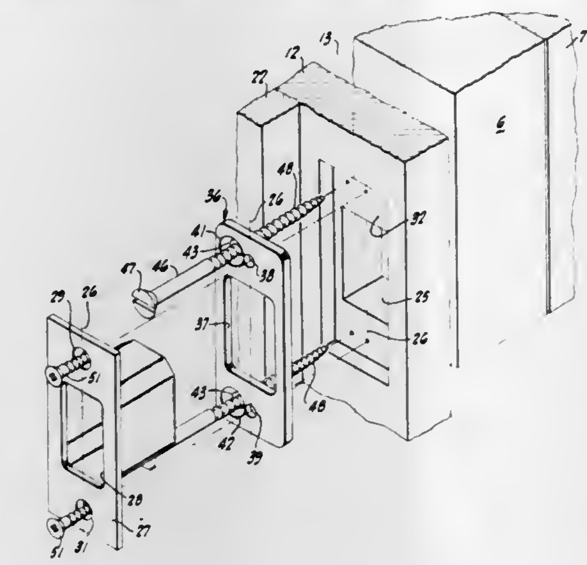

rail and through said space and into said cripple, a strike plate abutting said planar plate and said screw rods and in substantial registry with said planar plate, means defining a bolt opening and screw openings in said strike plate substantially registering with said elongated bolt opening and said screw receiving holes, and screw fasteners disposed in said screw receiving holes in said strike plate freely passing through said screw receiving circular holes in said planar plate and laterally engagable by both said strike plate and said planar plate.

4,065,163
STRIKE PLATE FOR HOOK BOLT LOCK SETS
Mitsuo Nagase, Kurobe, Japan, assignor to Yoshida Kogyo K.K., Tokyo, Japan
Filed Aug. 30, 1976, Ser. No. 718,821
Claims priority, application Japan, Sept. 1, 1975, 50-121021[U]
Int. Cl.² E05C *5/02*
U.S. Cl. 292—341.15 **3 Claims**

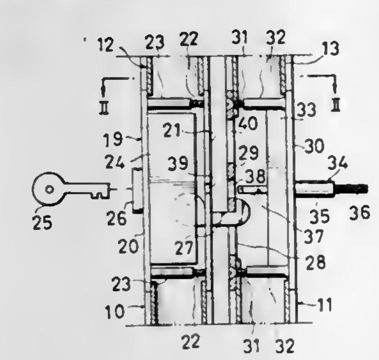

1. A hook bolt lock set for use on a pair of closure members slidable in adjacent planes and having a pair of overlapping stiles, comprising:

a. a lock for being mounted in one of the overlapping stiles, said lock having a hook bolt for spanning the space between said planes and capable of projection toward and retraction from the other overlapping stile in a direction normal to the planes in which the closure members are movable;

b. an invertible strike plate for being attached to said other overlapping stile in a position parallel to said planes, said strike plate having a central opening and a pair of apertures alternatively receptive of said hook bolt, and located one on each side of and symmetrically in position with respect to said central opening, one of said apertures being wider in width than the other; and

c. means connected to said plate and slidable through said central opening for actuating said lock from the side of said other overlapping stile.

4,065,164
FIRE-SAFE LEVER HANDLE
Vernon A. Bartels, Alameda, Calif., assignor to Schlage Lock Company, San Francisco, Calif.
Filed Nov. 26, 1976, Ser. No. 745,358
Int. Cl.² E05C *21/00*
U.S. Cl. 292—347 **10 Claims**

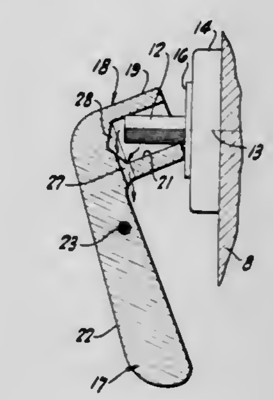

1. A fire-safe lever handle comprising a lock spindle, means for supporting said spindle for rotation about a horizontal axis, a lever handle having a center of gravity off of said axis, a hub on said lever handle, a meltable material when solid interposed between and engaging said hub and said spindle against relative rotation, and means on said lever handle forming a drain for said material when melted.

4,065,165
DOOR HANDLE MECHANISMS
Richard David Hamblin, Birmingham, England, assignor to Archibald Kenrick and Sons Limited, West Bromwich, England
Filed Mar. 25, 1975, Ser. No. 561,950
Claims priority, application United Kingdom, Mar. 27, 1974, 13535/74; Mar. 27, 1974, 13544/74
Int. Cl.² E05C *21/00*
U.S. Cl. 292—348 **14 Claims**

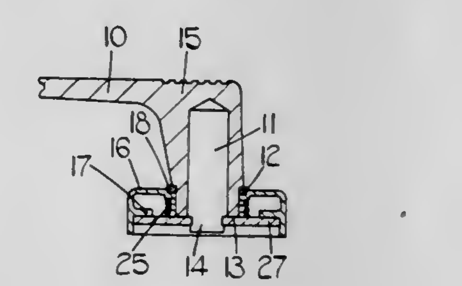

1. A door handle mechanism comprising a handle, a shank on said handle, the shank having a circular section bore therein, an attachment plate, the attachment plate having an opening therein, the shank being journalled in the opening in the attachment plate, a member non rotatably engaged on the shank and retaining it in the opening in the attachment plate, means for limiting angular movement of said handle with respect to said attachment plate, spring means arranged to oppose angular movement of said handle in one direction, two parallel inwardly presented edges on said member, said edges being disposed within the circular section bore in the shank and at least in part defining a hole shaped non-rotatably to engage a non-circular section spindle.

4,065,166
DEMOUNTABLE EXTENSION ENCLOSURE FOR MOTOR VEHICLES
Brian C. Shoemaker, 2707 W. 144th St., Gardena, Calif. 90249
Filed Aug. 26, 1976, Ser. No. 718,143
Int. Cl.^{2} A45F *1/06*
U.S. Cl. 296—23 G 10 Claims

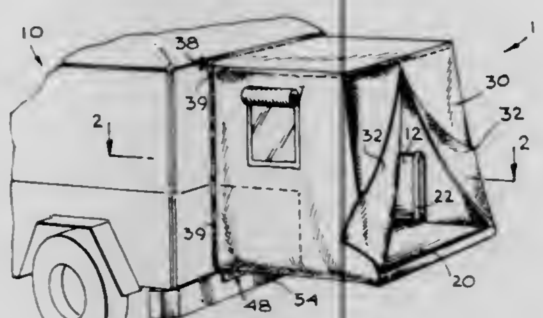

1. A demountable extension enclosure for a motor vehicle provided with an enclosed rear compartment having at least one doorway opening covered with a plurality of door panels, with two door panels of said plurality of panels comprising a substantially symmetrical and cooperating pair and being laterally openable on hinges arranged along the opposed, vertical side frames of said doorway, said extension enclosure comprising:
a flat floorboard substantially aligned with, and forming an outward, horizontal extension of, the floor of said vehicle compartment;
locating and securing means for maintaining and affixing said floorboard along the lower frame of said doorway, proximate to said floor;
support means disposed on the inner face of each of said laterally openable doors and secured thereto for supporting said floorboard near its outboard edge; and
a flexible fabric housing attached to said vehicle and disposed about the sideboard and outboard edges of said floorboard, enclosing the volume defined by said floorboard in plan and the height of said vehicle compartment in elevation, said fabric housing being open with respect to the doorway of said vehicle.

4,065,167
SAFETY ENCLOSURE FOR MINING MACHINES
Newton E. Wright, P.O. Box 884, Lebanon, Va. 24266
Filed Sept. 16, 1976, Ser. No. 723,736
Int. Cl.^{2} B62D *27/06*
U.S. Cl. 296—28 C 7 Claims

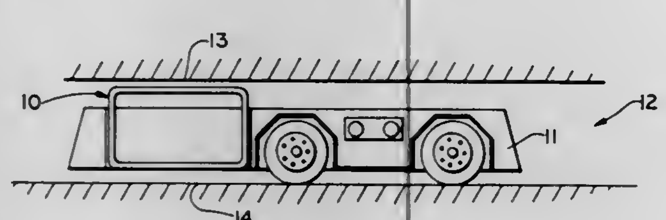

1. In a mining machine or the like, improved safety apparatus for protecting the operator thereof from overhead falls and the like comprising:
a. a cage-like enclosure for receiving and surrounding said operator while operating said machine;
b. means in association with said machine and said cage-like enclosure for securing said cage-like enclosure to one side of said machine and for allowing sliding displacement of said cage-like enclosure relative to said machine in a vertical direction;
c. means for adjustably maintaining said cage-like enclosure at a predetermined distance above the floor of said mine, said latter mentioned means being adapted to release said cage-like enclosure for sliding displacement to the floor of said mine in response to an overhead fall causing a predetermined force on the top of said cage-like enclosure.

4,065,168
TRAILER VAN CONSTRUCTION
Richard G. Gregg, Kewanee, Ill., assignor to Pines Trailer Corporation, Chicago, Ill.
Filed June 12, 1972, Ser. No. 261,610
Int. Cl.^{2} B62D *33/04*
U.S. Cl. 296—28 M 6 Claims

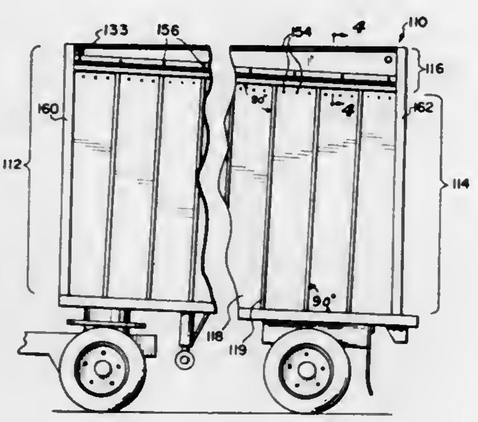

1. An elongate framing structure for use in the construction of a side wall of a trailer van, said framing structure comprising, an elongate rail having a top edge and a depending plate portion and laterally extending means for supporting a roof of the trailer van, said plate portion having a substantially unobstructed flat surface, an elongate capping member having a covering portion adapted to extend over and cover the upper edge of a panel part of said side wall, the capping member including flange means for attachment to said plate portion, and fastening means for securing the capping member with an upper margin of said panel part retained thereon to the flat surface of the plate such that the covering portion and the upper edge of the panel extends at an angle with respect to the top edge of the rail.

4,065,169
MOTOR TRUCK
Akira Yamanaka, Yokohama, Japan, assignor to Mitsubishi Jidosha Kogyo Kabushiki Kaisha, Tokyo, Japan
Continuation-in-part of Ser. No. 503,398, Sept. 5, 1974, abandoned. This application July 28, 1976, Ser. No. 709,312
Int. Cl.^{2} B62D *33/00*
U.S. Cl. 296—35 R 3 Claims

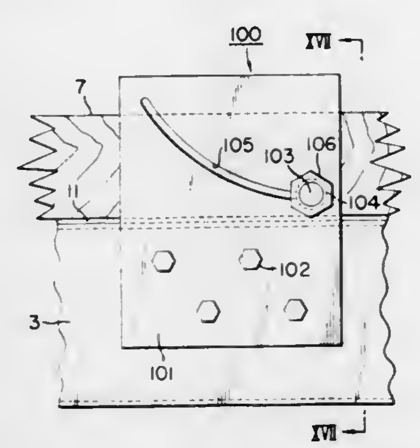

1. A motor truck comprising a frame device, a body device movable relative to the frame device, bolt members extending vertically at opposite sides of said frame and body devices to hold said devices together, and an energy transforming means comprising a plate member fixed to one of said devices and formed with an elongated slot inclined forwardly and upwardly and with a bore at a lower end of said slot, the diameter of said bore being greater than the width of said slot, and a cylindrical member fixed to the other of said devices and passing through said bore whereby said body device can be moved upwardly by said energy transforming means when a longitudinal impacting force of or greater than a predetermined value is applied and said slot and cylindrical member are moved relative to each other to cause deformation of said slot and said plate member.

4,065,170
FRONT SECTION OF A MOTOR VEHICLE, ESPECIALLY OF A PASSENGER MOTOR VEHICLE
Frank-Dietrich Fabian, Rommelshausen, and Rainer Leucht, Stuttgart, both of Germany, assignors to Daimler-Benz Aktiengesellschaft, Germany
Filed Sept. 11, 1975, Ser. No. 612,353
Claims priority, application Germany, Sept. 12, 1974, 2443636
Int. Cl.^{2} B60R *11/00*
U.S. Cl. 296—37.1 30 Claims

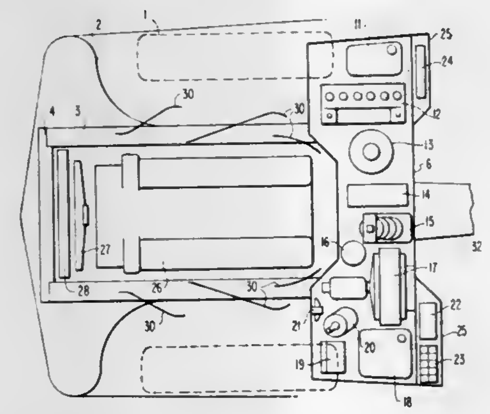

1. In a front section of a motor vehicle having an engine compartment defined by a pivotal hood, by longitudinal bearer members and wheel casings at the sides of the vehicle, and by the end wall of the passenger space, the improvement comprising means for enclosing operational components of said vehicle within said engine compartment separately from the engine, and sealing profile means for sealing said means for separately enclosing said operational components of said vehicle, such that said means for separately enclosing said operational components of said vehicle protects said operational components from environmental conditions both inside and outside said engine compartment.

4,065,171
GLARE SHIELD FOR AUTOMOBILES
Frank Nagy, 8400 Seymour Road, Gaines, Mich. 48436
Filed Feb. 6, 1976, Ser. No. 655,683
Int. Cl.^{2} B60J *3/00*
U.S. Cl. 296—97 E 6 Claims

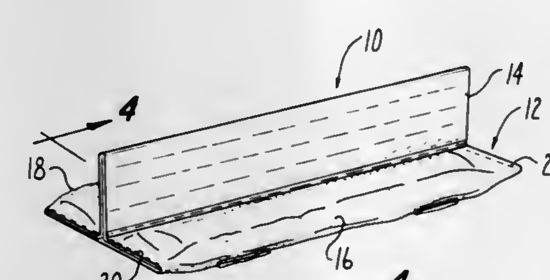

1. A glare shield for use with automobiles or the like comprising; a base member having walls of flexible cloth-like material forming a closed compartment, ballast means in the form of separate particles loosely contained in said compartment, and a flexible shield member formed of the same cloth-like material as said base member and being less flexible than said walls of said compartments, said shield member being joined to said base member for deflection to various selected angular positions relative to said base member for any given position of said base member.

4,065,172
ADJUSTABLE DECK CHAIR
Louis S. Gawlinski, 1550 Bervy St., San Diego, Calif. 92110
Filed May 20, 1976, Ser. No. 688,397
Int. Cl.^{2} A47C *4/00*
U.S. Cl. 297—19 2 Claims

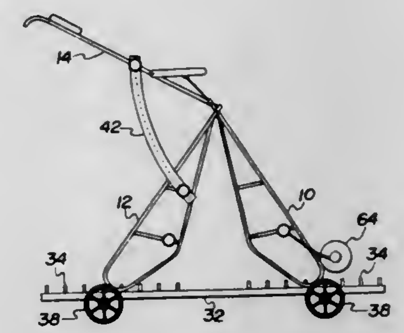

1. An adjustable deck chair comprising;
a. an upper platform and a lower platform hinged together to define an elongated deck portion of a chair;
b. a ground support member pivoted to one of said platforms to support same above a generally horizontal surface;
c. a rigid support brace structure connected to and between said upper platform and said ground support; and
d. means connecting said lower platform and ground support together such that upon receiving the weight of a person tension is applied to said connecting means, and said platforms, connecting means, ground support, and brace structure are maintained rigid;
e. said connecting means comprising an elongated member extendable on a horizontal surface and having means to releasibly engage at a plurality of different positions thereon both said lower platform and said ground support to prevent the separation thereof;
f. said elongated member being rigid and provided with wheels such that said chair is easily mobile when said ground support and lower platform are engaged on said elongated member.

4,065,173
FOLDING CHAIR
Robert S. Gittings, Tiburon, Calif., assignor to Gold Medal, Inc., Racine, Wis.
Filed Oct. 28, 1975, Ser. No. 626,284
Int. Cl.^{2} A47C *4/28*
U.S. Cl. 297—45 16 Claims

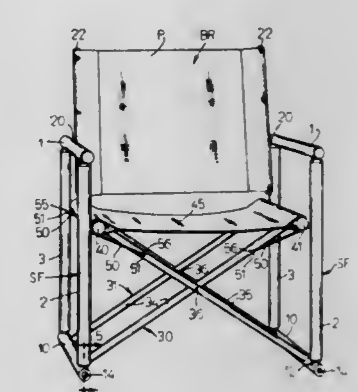

1. A folding chair comprising, a pair of parallel side frames, each side frame comprising, a front leg and rear leg, an arm member rigidly secured between said front and rear legs, and a lower, floor engaging, generally horizontal member, a pivotal connection between said lower member and each of said legs of said side frame, said chair also having a pair of intermediate frames, said intermediate frames each comprising a pair of

cross members for opening and closing in scissors fashion, said intermediate frames being spaced apart in a front and rear direction in respect to said chair and having their lower ends rigidly secured to the respective generally horizontal members of said side frames, said cross members each having upper ends, a seat rail for each pair of said upper ends of said cross members which are located at opposite sides of said chair, said rails having holes for the reception of said upper ends of said cross members, and screws between said upper ends of said cross members and rails, whereby said rails are removably but rigidly secured between said upper ends of said cross members, a flexible seat member mounted between said seat rails, said seat member having looped ends slipped over said rails, said side frames being movable toward and away from one another between operative seating and collapsed, storage positions, during which said lower members of said side frames oscillate along with said cross frames and relative to said legs.

4,065,174
AUTOMOTIVE SEAT CONVERTIBLE TO A BED
Masao Yokohama, and Shoji Sakai, both of Yokohama, Japan, assignors to Nissan Motor Co., Ltd. and Ikeda Bussan Company, Limited, both of Yokohama, Japan
Filed Sept. 28, 1976, Ser. No. 727,612
Claims priority, application Japan, Sept. 30, 1975, 50-132903[U]
Int. Cl.² A47C *1/02*
U.S. Cl. 297—66 **7 Claims**

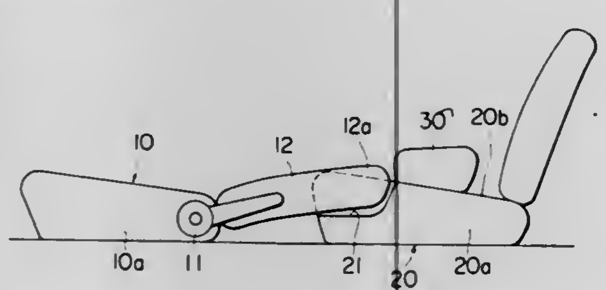

1. A convertible seat for an automotive vehicle, comprising a front seat with a seat cushion and a tiltable backrest, a rear seat with a seat cushion spaced from the front seat by a predetermined distance, a forward part of the rear seat cushion being cut away to form an upwardly and forwardly opening recess, and a foldable cushion snugly received within the recess of the rear seat cushion and partially connected to the rear seat cushion, the foldable cushion being foldable to be laid upon the rear seat cushion.

4,065,175
CONVERTIBLE CHAIR
Giuseppe Perego, Piazza Martiri Liberta 6, 20043 Arcore, Italy
Filed July 6, 1976, Ser. No. 703,055
Int. Cl.² A47C *13/00*
U.S. Cl. 297—130 **9 Claims**

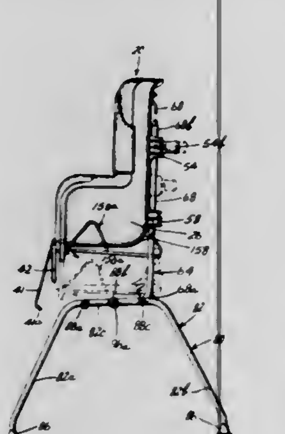

1. A convertible chair comprising:
a framework comprising a plurality of elongate legs connected at their upper ends and disposed in outwardly angled configuration in relation to one another, the lower ends of said legs being engageable with a supporting surface;
a chair mounted in pivotable relation to said framework and swingable to a first upright position for occupant seating support relative said framework and to a second inverted position between two of said legs whereby said chair is disposed substantially between said legs;
releasable means for releasably securing said chair to said framework in said first position; and
adjusting means for vertically adjusting said chair relative said framework when said chair is in said first position.

4,065,176
CHAIR CONTROL
Frank J. Fontana, Stratford, Conn., assignor to Stewart-Warner Corporation, Chicago, Ill.
Filed Aug. 19, 1976, Ser. No. 715,910
Int. Cl.² A47C *3/00, 1/024*
U.S. Cl. 297—304 **4 Claims**

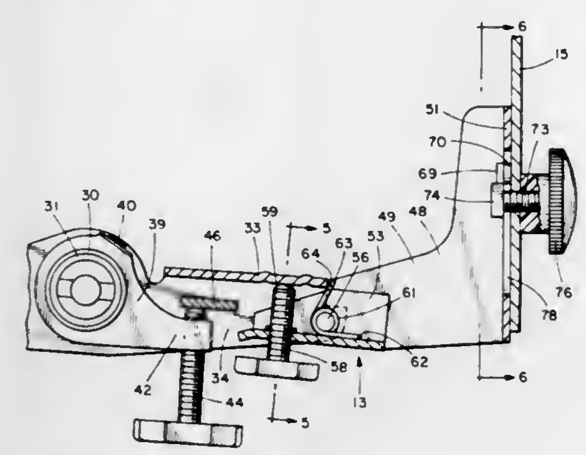

1. A chair control for supporting a seat and a back rest, comprising; a seat frame, a back member projecting rearwardly from said seat frame, said back member having a generally vertial wall, an elongated aperture in said wall, a back rest support extending upwardly from said back member for supporting a back rest at the upper end thereof, said back rest support having a T-shaped projection extending, the top of the "T" having a length greater than the width of the elongated aperture in said back member so that the projection may be inserted in said aperture and the back rest support rotated 90° holding the back rest support on said back member, and fastening means for holding said back rest support to said back member.

4,065,177
INFANT CARRIER ASSEMBLY
Richard E. Hyde, Palos Verdes, and Lee T. Carmichael, Pasadena, both of Calif., assignors to California Strolee, Inc., Compton, Calif.
Filed Nov. 26, 1976, Ser. No. 745,183
Int. Cl.² B62B *7/08*
U.S. Cl. 297—327 **8 Claims**

1. An infant carrier assembly comprising:
a frame;
an infant carier;
first and second sets of pins extending from one of said frame and said carrier;
first and second brackets, each having channel means therein, mounted on the other of said frame and said carrier, said first bracket being positioned to receive one of said first and said second sets of pins in the channel means therein and said second bracket being positioned to receive the other of said first and said second sets of pins in the channel means therein;
each said channel means having a first path for receipt of one pin of said first and said second sets of pins and a second path for receipt of a second pin of the same set of said first

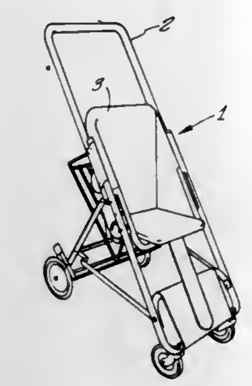

and said second sets of pins, said first path being arcuate and said second path being substantially linear and extending toward and away from said arcuate path.

4,065,178
EASY ENTER SEAT ASSEMBLY
Richard F. Carella, Mount Clemens, Mich., and Thomas W. Perry, South Bend, Ind., assignors to General Motors Corporation, Detroit, Mich.
Filed Mar. 18, 1977, Ser. No. 779,085
Int. Cl.² B60N *1/02*
U.S. Cl. 297—341 **3 Claims**

1. A vehicle seat including a cushion and a seat back, track means including spaced rail members attached to said seat cushion and corresponding rail members attached to the vehicle floor slidingly engageable together for movement of said seat cushion in a fore and aft direction with respect to the vehicle, said stationary rails being attached to the vehicle floor and having a vertical wall with elongated slots therein extending in a fore and aft and generally horizontal direction, seat locater means extending between said stationary rails with end portions within said elongated slots and provision for selectively fixing said end portions at desirable locations along said elongated slots corresponding to a desired fore and aft seat cushion position, arm members extending from said seat back and being pivotally mounted to said stationary rails rearward of said end portions of the seat locater means to permit forward tilting movement of the seat back, said pivotal mounts of the seat back arms having an axis extending through said elongated slots and slidable rearwardly within said elongated slots as said seat back is tilted forward, connecting means between said seat back arms and said seat cushion to produce forward movement of the cushion as the arms are pivoted in response to forward tilting of the seat back, said connecting means limiting the degree of forward tilt and sliding movement of the cushion to a constant forward location irrespective of the position of said seat locater means, stop means extending from said slidable seat cushion and attached rail forwardly of the seat locater means and engageable therewith upon rearward return movement of the seat cushion to relocate said cushion in its preselected position along said stationary rails when the seat back is returned to its drive position.

4,065,179
NURSING CARRIAGE
Takao Takasaki, No. 4920-2, Ooazahirano, Nichinan, Miyazaki, Japan
Filed Nov. 22, 1976, Ser. No. 743,599
Claims priority, application Japan, Nov. 27, 1975, 50-124737
Int. Cl.² A61G *1/02*
U.S. Cl. 297—384 **11 Claims**

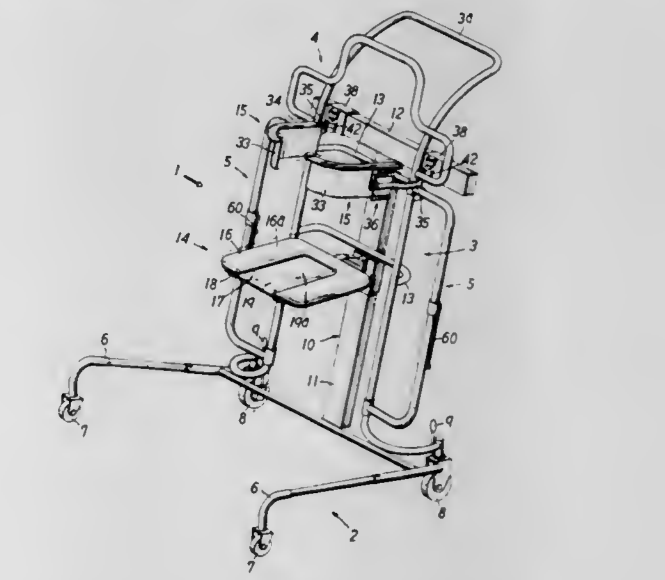

1. A nursing carriage comprising in combination:
a base frame having a pair of substantially parallel extending feet, each with a caster at the toe and heel ends thereof;
a body frame having a substantially rectangular shape and erected on said base frame in a slightly reclined position;
a T-shaped support securely mounted on said body frame and having a vertical column and a transverse beam;
a seat swingably mounted on said vertical column of said T-shaped support;
a pair of embracing arms swingably mounted on said transverse beam of said T-shaped support;
an arm operating mechanism having means for locking said embracing arms in embracing positions and means for displacing said embracing arms toward each other upon application of a weight thereon;
a top frame mounted securely on said body frame at a position above said embracing arms;
side frames attached at opposite sides of said body frame; and
auxiliary legs swingably mounted on said said frames.

4,065,180
LEG-RESTRAINING DEVICE FOR GERIATRIC CHAIR
John Karay, 1408 College St., Bowling Green, Ky. 42101
Filed Jan. 5, 1977, Ser. No. 756,955
Int. Cl.² A47C *31/00*
U.S. Cl. 297—384 **5 Claims**

1. In a chair including a generally planar seat member having a front edge and opposite sides, and a frame member supporting the seat member above and substantially parallel to a floor surface, a leg-restraining device comprising:
a. an elongated, generally planar, leg-restraining member having opposite end portions,
b. two elongated support members, each support member being attached to one of the opposite end portions of said leg-restraining member,
c. means mounting each of said support members to the frame member on opposite sides of said seat member to dispose the plane of said restraining member normal to the plane of said seat member, and spaced in front of, slightly below, and parallel to the front edge of said seat member,

d. said leg-restraining member being normally spaced proximate to and in front of the shins of the person seated upon the seat member of the chair with his legs depending over the front edge of the seat member, said leg-restraining member being positioned to block the movement of the shins of a person sliding forwardly from his seat-supported position on said seat member, and

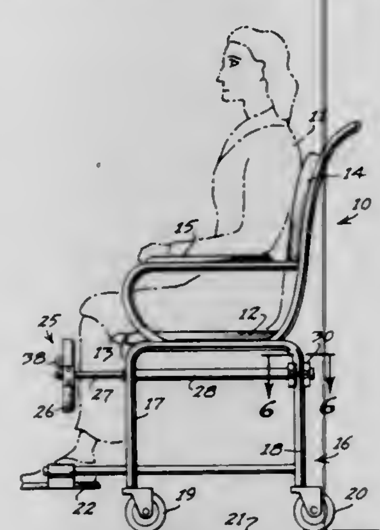

e. means operatively connected to said support member for removing said leg-restraining member from said frame member and for adjusting the position of said restraining member toward and away from said frame member below said seat member.

4,065,181
CUSHION RETENTION FOR A VEHICLE SEAT
Donald E. Gunlock, Birmingham, and John A. Manetta, Sterling Heights, both of Mich., assignors to General Motors Corporation, Detroit, Mich.
Filed Aug. 30, 1976, Ser. No. 718,882
Int. Cl.² A47C *7/02*
U.S. Cl. 297—452 **6 Claims**

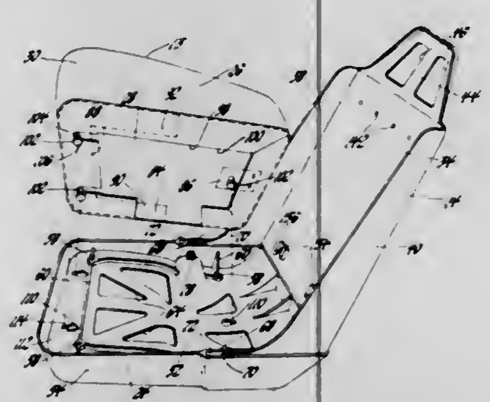

6. In a seat, the combination comprising:
a cushion bun of resilient foam having an underface and an edge wall;
a support member having a generally planar support wall adapted for supporting engagement by the underface of the cushion bun and having sidewalls extending generally perpendicularly from the support wall adjacent the edge wall of the cushion bun to support the edge wall of the cushion bun;
a seat cover for enveloping the cushion bun and having an opening in the underside thereof overlying the support wall of the support member and having a size sufficient to permit insertion of the cushion bun only when the cushion bun is compressed, the cushion bun being in a somewhat compressed state when installed within the seat cover so that the seat cover and cushion bun exert opposing forces on one another;
rigid panel means secured to the underface of the cushion bun along only a portion thereof not interfering with compression of the cushion bun sufficient to permit insertion of the cushion bun into the seat cover;
attachment means acting between the seat cover and the rigid panel means to attach the seat cover to the cushion bun;
and fastening means acting between the support member and the rigid panel means to mount the cushion bun on the support member;
the rigid panel means having an outer edge being generally coextensive with the edge wall of the cushion bun to provide rigidity and prevent the opposing forces imposed by the seat cover and cushion bun from altering the shape of the cushion bun by compressing of the cushion bun at the juncture between the underface and edge wall.

4,065,182
CUSHION RETENTION FOR A VEHICLE SEAT
Michael J. Braniff, Troy, and James L. Waller, Sterling Heights, both of Mich., assignors to General Motors Corporation, Detroit, Mich.
Filed Aug. 30, 1976, Ser. No. 718,881
Int. Cl.² A47C *7/02*
U.S. Cl. 297—452 **3 Claims**

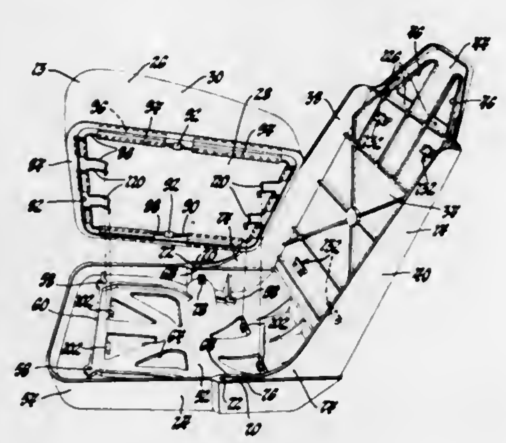

1. A vehicle seat comprising:
a support member having a generally planar support wall;
a seat cushion for mounting on the support member in engagement with the support wall of the support member, said seat cushion having a cushion bun of resilient foam for comfortably seating an occupant on the support member and a seat cover enveloping the cushion bun, the seat cover having an edge portion and an opening adjacent the edge portion through which the cushion bun may be inserted by compressing the cushion bun and then allowing expansion of the cushion bun to fill the seat cover;
a resilient retainer wire extending around the opening and being attached along the edge portion of the seat cover so that the resilience of the foam bun urges the seat cover outwardly in the direction enlarging the opening and exerting tension on the retainer wire;
a plurality of abutment means on the support member and a plurality of cooperable abutment means formed integrally in the retainer wire, the respective abutment means being matingly engageable upon flexure of the retainer wire in the direction which decreases the size of the opening of the seat cover and opposes the tensioning effort exerted on the border wire by the resilience of the cushion bun acting on the seat cover whereby the resilience of the cushion bun cooperates with the resilience of the retainer wire to maintain the integrally formed abutment means on the retainer wire in engagement with the mating abutment means on the support member to attach the seat cushion on the support member.

4,065,183
RECOVERY SYSTEM FOR OIL SHALE DEPOSITS
David A. Hill, Hermosa Beach; Durk J. Pearson, Palos Verdes Estates; Ethelyn P. Motley, Rancho Palos Verdes, all of Calif.; Thomas N. Beard, Denver, Colo., and James L. Farrell, Palos Verdes Estates, Calif., assignors to TRW Inc., Redondo Beach, Calif.
Filed Nov. 15, 1976, Ser. No. 741,817
Int. Cl.² E21C *41/10*
U.S. Cl. 299—4 **16 Claims**

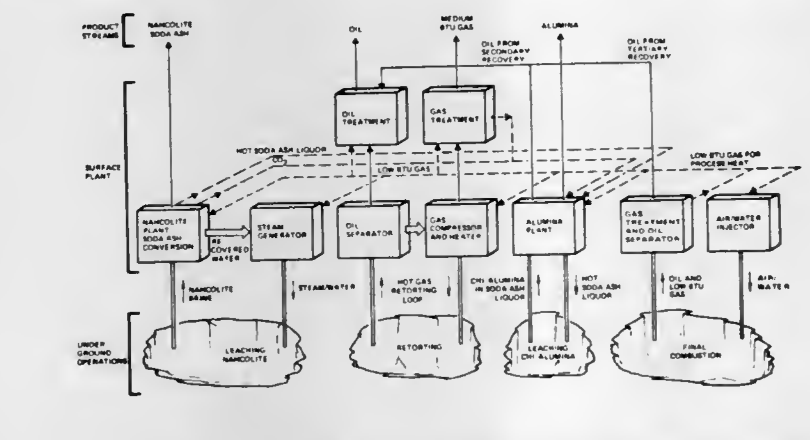

1. A process for the in-situ recovery of hydrocarbon values and associated minerals from subsurface oil shale deposits in which a gas-tight retort chamber can be produced comprising the steps of:
A. drilling into said oil shale deposits;
B. injecting heated water into said shale deposits to dissolve and extract said associated minerals which are water soluble thereby forming a substantially gas-tight chamber;
C. injecting hot, pressurized gas into said shale deposit in said chamber whereby said associated minerals are decomposed and hydrocarbon fluids extracted;
D. injecting a solvent-surfactant into said deposit and extracting said decomposed minerals and hydrocarbon fluids;
E. removing said solvent-surfactant from said deposit;
F. instituting a flame front to combust hydrocarbon and carbonaceous residue; and
G. filling said chamber with a fluid selected from the group consisting of water, aqueous solutions, and aqueous slurries.

4,065,184
PLOW CUTTER ASSEMBLY
John M. Tipper, Tams, W. Va. 25933
Filed Oct. 27, 1976, Ser. No. 736,149
Int. Cl.² E21C *35/20*
U.S. Cl. 299—34 **9 Claims**

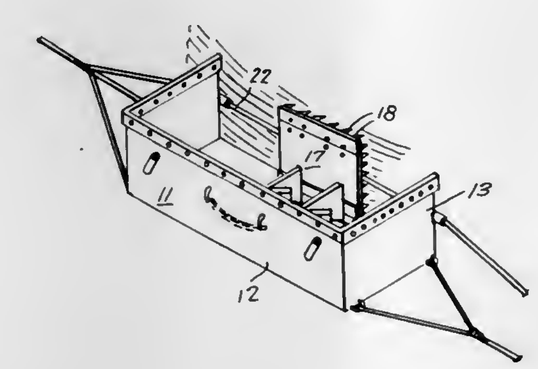

1. An apparatus to be pulled in a direction of travel for scraping and conveying coal from a mining site to a point remote therefrom comprising, at least one hollow rectanguloid container having two open faces which are substantially parallel to the direction of travel of the container, and two closed faces also parallel to the direction of travel and disposed orthogonally to each other, and two end walls perpendicular to the direction of travel and connected to said closed faces provided with means for pulling said container along the face of a coal deposit, and means disposed on one of said closed faces within said container for attaching scraping means thereto so that said scraping means extends out from at least one of said open faces to provide a cutting surface.

4,065,185
POINT-ATTACK BIT
Gerald W. Elders, 38 Yakashba Estates, Prescott, Ariz. 86301
Filed July 22, 1976, Ser. No. 707,647
Int. Cl.² E21C *35/18*
U.S. Cl. 299—86 **7 Claims**

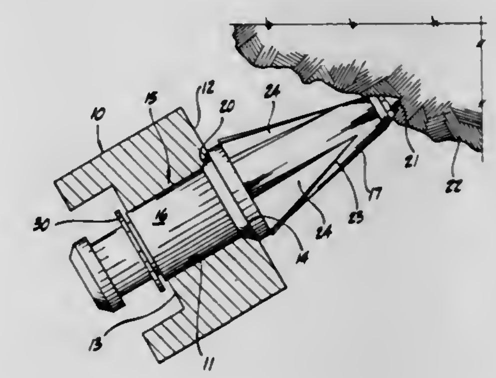

1. A point-attack bit for removing material from a mine face, comprising:
a. an elongate shank, and
b. a head integral and coaxial with the shank, the head including a plurality of peripherally spaced, laterally projecting vanes extending generally longitudinally of the bit, each vane being substantially triangular with a narrow leading end and a wider trailing end, and having relatively diverging sides that extend from the leading end to the trailing end, and contact with material being mined to effect a positive turning of the bit upon picking of the mine face.

4,065,186
DUAL FLANGED WIDE BASE TIRE CARRYING RIM AND WHEEL
William D. Walther, Kettering, Ohio, assignor to Dayton-Walther Corporation, Dayton, Ohio
Continuation-in-part of Ser. No. 592,501, July 9, 1975, abandoned, and Ser. No. 592,502, July 9, 1975, abandoned. This application Jan. 11, 1977, Ser. No. 758,451
Int. Cl.² B60B *23/10*
U.S. Cl. 301—12 R **4 Claims**

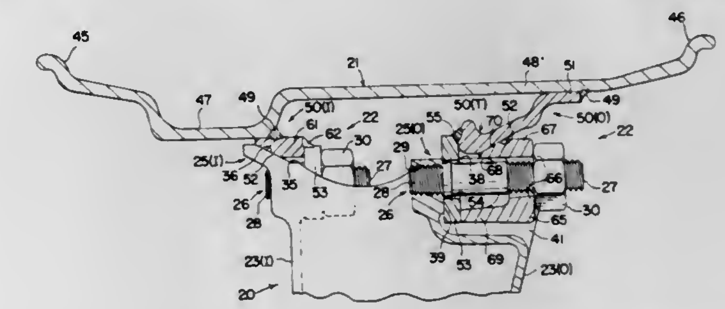

1. A combination of a tire carrying rim mounted by fastening assemblies on a vehicle wheel,
said wheel having two series of alternating spoke members, each of said series having an axially spaced-apart and staggered relation to the other of said series, each of said spoke members having a felloe comprising a radially directed surface substantially perpendicular to the rotational axis of said wheel and providing a mounting location for an axially projecting component of said fastening assemblies,
said rim having bead flanges projecting radially outwardly from a rim base comprising a well portion and a lateral

portion between said bead flanges, said rim having two axially spaced-apart radially inwardly projecting mounting flanges, one of said mounting flanges being integrally attached to said rim base well portion and the other of said mounting flanges being integrally attached to said rim base lateral portion, each of said mounting flanges having a radially directed terminal portion substantially perpendicular to the rotational axis of said rim and having a series of bores therein for receiving an axially projecting component of said fastening assemblies,

whereby, said rim is mounted on said wheel by tightening of said fastening assemblies against each said mounting flange terminal portion and the full surface engagement of said terminal portions with said radially directed wheel felloe surfaces.

4,065,187

SEMICONDUCTOR LATCH CIRCUIT USING INTEGRATED LOGIC UNITS AND SCHOTTKY DIODE IN COMBINATION

Yasoji Suzuki, Ayase; Yukuya Tokumaru, and Masanori Nakai, both of Yokohama, all of Japan, assignors to Tokyo Shibaura Electric Co., Ltd., Tokyo, Japan

Filed Nov. 30, 1976, Ser. No. 746,159

Claims priority, application Japan, Dec. 1, 1975, 50-142180

Int. Cl.² H03K *3/286*

U.S. Cl. 307—279 **14 Claims**

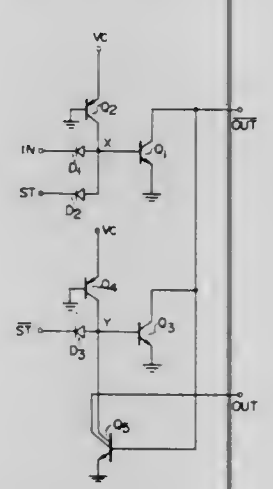

1. A semiconductor latch circuit operative with a power source comprising a first integrated injection logic unit formed of a first switching transistor and a first injector transistor; a second integrated injection logic unit formed of a second switching transistor and a second injector transistor; an output signal leading-out transistor having first and second collectors; an input terminal for receiving a pulse signal to be latched; a first Schottky diode connected between the base of the first switching transistor and said input terminal; strobe signal input means operatively connected to the respective bases of said first and second switching transistors for providing strobe signals thereto; an output terminal connected to the first collector of the output signal leading-out transistor; wherein the emitters of the first and second injector transistors are connected to the power source; the collector of the first injector transistor and the collector of the second injector transistor are connected to the bases of the first and second switching transistors, respectively; the bases of the first and second injector transistors are connected to a reference potential; the collectors of the first and second switching transistors are connected to the base of the output signa leading-out transistor; the emitters of the first and second switching transistors are connected to the reference potential; the second collector of the output signal leading-out transistor is connected to the base of the second switching transistor; and said first Schottky diode is rendered nonconductive when a pulse signal supplied to the pulse signal input terminal has a level of "1".

4,065,188

LINEAR BEARING FOR PARALLEL TRACKING ARM

Keith Douglas Ridler, Fulbourn; Alexander Bennett Gosling, Linton, and Gordon Malcolm Edge, Saffron Walden, all of England, assignors to Strathearn Audio Limited, Great Britain

Continuation of Ser. No. 548,602, Feb. 10, 1975, abandoned. This application July 14, 1976, Ser. No. 705,026

Int. Cl.² F16C *39/06, 32/04*

U.S. Cl. 308—10 **6 Claims**

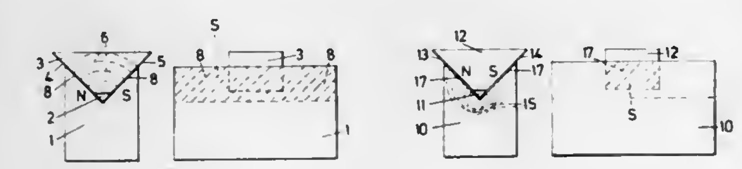

1. A linear bearing arrangement including a slide having a first bearing surface, a slider having a second bearing surface, a thin film of magnetic fluid lubricant material between the said surfaces, the thin film of magnetic fluid lubricant material adhering to one of the said bearing surfaces under the influence of a magnetic field and means to provide a magnetic field extending from one of the said bearing surfaces to the magnetic fluid lubricating material to maintain the said material on said one surface.

4,065,189

MAGNETICALLY SUSPENDED ANGULAR MOMENTUM WHEEL

Daniel J. Sikorra, Belleair, Fla., assignor to Honeywell Inc., Minneapolis, Minn.

Filed Oct. 14, 1975, Ser. No. 622,324

Int. Cl.² F16C *39/00*

U.S. Cl. 308—10 **6 Claims**

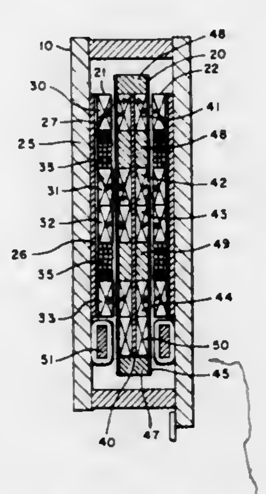

1. An angular momentum storage apparatus comprising:

a rotor member in the shape of a circular disk having two parallel flat sides, the diameter of said rotor member being substantially greater than its thickness;

a pair of stator members each having a flat surface of area substantially equal to the area of one flat side of said rotor member, the two stator members being positioned such that their two respective flat surfaces are parallel and facing each other and are separated from each other by a distance slightly greater than the thickness of said rotor member; and

means for supporting said rotor member between said stator members free of mechanical contact with said stator members and free for rotation about a spin axis said means for supporting including,

a plurality of single polarity axially magnetized permanent magnet rings mounted on the flat sides of said rotor member and the flat surfaces of said stator members,

electromagnetic field generating means mounted on said stator members for generating a differential magnetic field between said stator members and said rotor member,

position sensing means for detecting the displacement of said rotor from a predetermined position with respect to said stator members and for generating a signal which is a function of said rotor member displacement, and

means for receiving the signal from said position sensing means and connected to said electromagnetic field generating means to control said magnetic field so as to maintain said rotor member in said predetermined position.

4,065,190

SELF ADJUSTING ELEVATING TEMPERATURE BEARING AND HOUSING

Stig Lennart Hallerback, Vastra Frolunda, Sweden, assignor to SKF Industrial Trading and Development Company, B.V., Jutphaas, Netherlands

Continuation-in-part of Ser. No. 566,080, April 8, 1975, abandoned. This application Apr. 29, 1976, Ser. No. 681,718

Claims priority, application Sweden, May 3, 1974, 7405905

Int. Cl.² F16C *17/22, 27/00, 35/00, 39/00*

U.S. Cl. 308—15 **9 Claims**

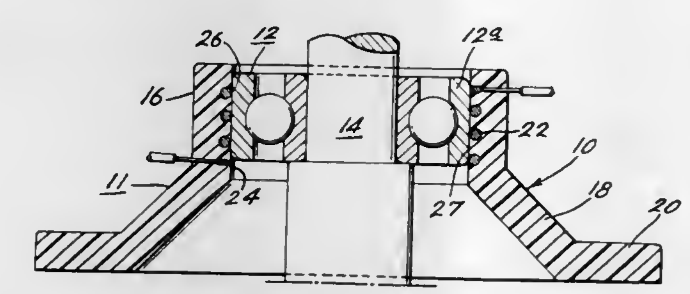

1. A bearing housing which is subjected to varying temperatures for mounting an annular bearing element including a section having a generally cylindrical surface defining a seat of a predetermined diametral dimension in relation to the annular bearing element to firmly support the same and formed of a molding material having a first longitudinal expansion coefficient and a spiral cast in the molding material having at least a portion thereof confronting the annular bearing element when mounted in the seat, said spiral being of a material having a second longitudinal expansion coefficient the same as the annular bearing element and different from said molding material, said section of the bearing housing with the spiral cast therein providing a seat having substantially the same heat expansion coefficient as the annular bearing member.

4,065,191

ROLLER SKEW CONTROL FOR TAPERED ROLLER BEARINGS

Erik Magnus Kellstrom, Partille, Sweden, assignor to SKF Industries, Inc., King of Prussia, Pa.

Filed May 13, 1976, Ser. No. 686,030

Int. Cl.² F16C *19/00, 33/00*

U.S. Cl. 308—202 **16 Claims**

1. A bearing comprising inner and outer members having inner and outer raceways confronting one another to define an annular space, at least one rolling element rotatable about an axis in said annular space adapted to engage said members at inner and outer raceway contact zones and mounting said members for rotation relative to one another in a path about a bearing axis, said rolling element having a profile tapered at a predetermined angle with respect to its rotational axis, the apex of the taper angle of the rolling element being spaced from said bearing axis when the bearing is under a predetermined external load and surface means on at least one of said raceways to cause said rolling element at a predetermined position in the load zone to assume a non-negative skew angle within a predetermined angular range, said rolling element having a skew angle when the rolling element axis and bearing axis are not coplanar and said skew angle being positive when the axial friction force component on a raceway arising between said

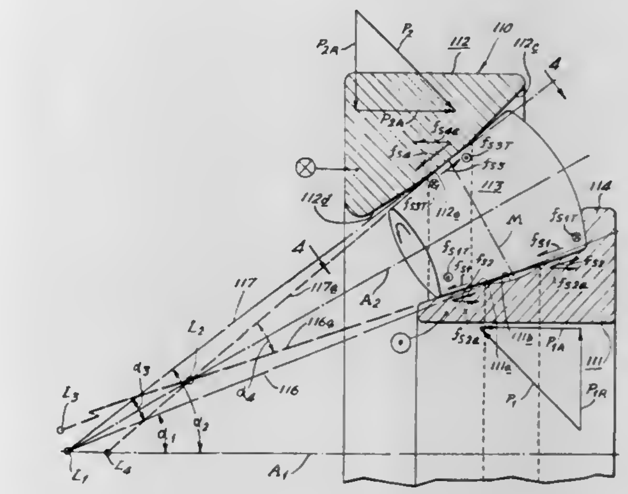

rolling element and said raceway in said contact zone is so directed that it counteracts the axial component of the external load on said one raceway.

4,065,192

RACE INSERT FOR BEARING

John E. Sague, Philadelphia, Pa., assignor to Messinger Bearings, Inc., Philadelphia, Pa.

Filed July 19, 1976, Ser. No. 706,756

Int. Cl.² F16C *33/58*

U.S. Cl. 308—215 **6 Claims**

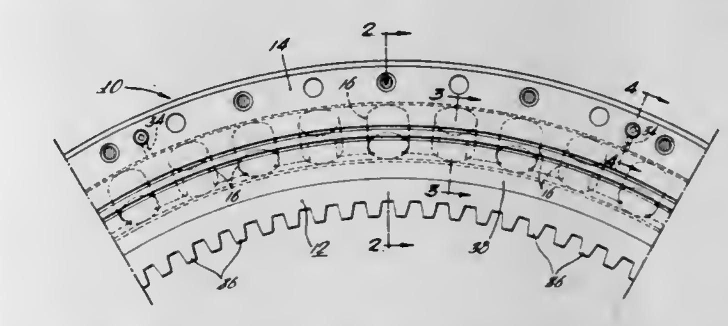

1. A ring for a bearing assembly having generally parallel inner and outer faces, means defining a pocket in the surface between said faces for an insert having a load carrying surface defining a raceway, said pocket including a circumferentially extending first wall generally parallel to said faces and spaced therebetween, a second circumferentially extending frusto-conical wall which diverges inwardly from one face toward said first wall, an endless annular insert adapted to seat in said pocket having a frusto-conical surface portion confronting and complementing said second wall portion and dimensioned to provide an interference fit therewith.

4,065,193

THRUST BALL BEARING

Horst Manfred Ernst, Eltingshausen; Armin Olschewski, Schweinfurt; Rainer Schurger, Schwanfeld; Lothar Walter, Schweinfurt; Manfred Brandenstein, Aschfeld; Erich Burkl, Stammheim, and Heinz Kiener, Waigolshausen, all of Germany, assignors to SKF Industrial Trading and Development Company, B.V., Nieuwegein, Netherlands

Filed June 7, 1976, Ser. No. 693,510

Claims priority, application Germany, July 9, 1975, 7521786

Int. Cl.² F16D *23/00*

U.S. Cl. 308—233 **11 Claims**

1. In a thrust bearing having thin-walled inner and outer rings, at least one of which has a closed end, and a rolling ball

assembly between said rings; the improvement wherein said closed end is cup-shaped and curved, with the center of curvature of said closed end being on the side thereof toward said rolling ball assembly.

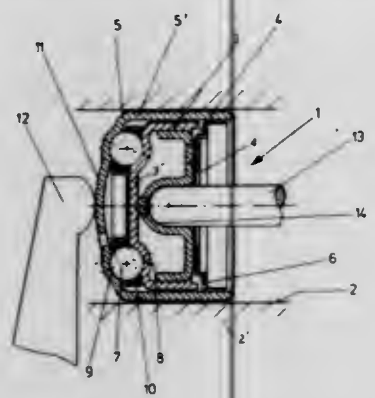

4,065,194
PULPIT ELEVATING AND LOWERING SYSTEM
Armand D. Mattia, 4058 Apore St., La Mesa, Calif. 92041
Filed May 20, 1976, Ser. No. 688,177
Int. Cl.² A47B *51/00*
U.S. Cl. 312—247 **3 Claims**

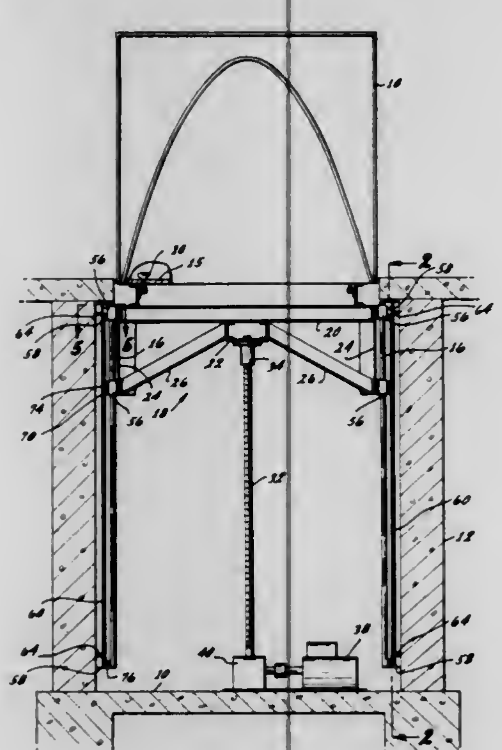

1. A system for moving a pulpit between an elevated position at a selected elevation for use and a lowered stored position which comprises:
- a walled pit adapted to be located immediately beneath a floor;
- a plurality of upstanding parallel guide rails located adjacent to vertical walls of said pit;
- a plurality of pillow blocks slidably engaging said guide rails;
- a carriage mounted on said pillow blocks and spanning the space between said guide rails;
- a drive nut secured to said carriage at substantially the center thereof;
- a drive screw engaging said drive nut, said drive screw extending upwardly from the bottom of said pit substantially parallel to said guide rails;
- drive means within said pit adapted to rotate said screw selectively in either direction;
- a pulpit releasably mounted on the top of said carriage for vertical movement therewith;
- separate hinged lid means spring loaded toward closing said pit when said carriage and pulpit are entirely within said pit;
- guide means on the upper surface of said pulpit to engage said lid means about the lid hinge as said pulpit is moved upwardly;
- a hinged extension on the upper surface of said pulpit adapted to engage said hinged lid as said pulpit is lowered so that said extension is pivoted about a hinge to a stored position behind said guide means whereby further lowering of said pulpit is unobstructed;
- control means to selectively operate said screw drive in a direction which elevates said pulpit to a selected height and opens said lid means and in a direction which lowers said pulpit into said pit and allows said lid to close, providing an unobstructed floor surface; and
- stop means comprising a finger extending from said carriage toward an adjacent wall of said pit, an upper limit switch secured to said adjacent wall positioned to be engaged by said finger when said carriage is at the maximum elevated position, a lower limit switch secured to said adjacent wall positioned to be engaged by said finger when said carriage is at the maximum lowered position, and electric circuit means interconnecting said upper and lower limit switches said control means and said screw drive motor whereby said drive motor is stopped whenever one of said upper and lower limit switches is engaged by said finger.

4,065,195
COLLAPSIBLE DOG FEEDER
John H. Fahmie, 8805 Bird Road, Miami, Fla. 33156
Filed May 12, 1976, Ser. No. 685,702
Int. Cl.² A47B *43/00, 48/00*
U.S. Cl. 312—258 **3 Claims**

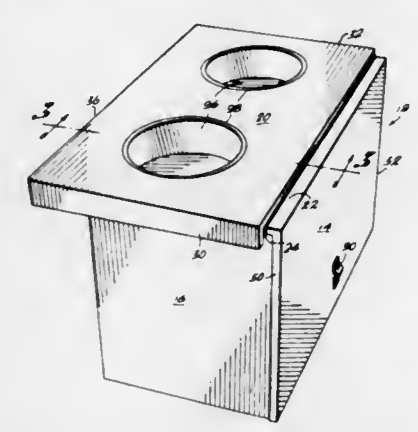

1. A portable animal feeder stand comprising:
- a front panel of rigid material having opposed side edges and an upper edge and a lower edge and having an inner face and an outer face extending between the edges,
- a pair of side panels of rigid material and of similar size to one another, each having opposed side edges and a top edge and a bottom edge,
- hinge means connecting one edge of one of said pair of panels to the inner face of the front panel and hinge means connecting the other of said pair of panels to the inner face of the front panel, each of said hinge means being adjacent and parallel to one of the side edges of said front panel, and the bottom edge of each side panels being at the plane of the bottom edge of said front panel and the top edge of each of said side panels being spaced from the top edge of said front panel on said inner face, a common distance with their top edges defining a support surface,
- the distance between the side edges of each panel being not greater than one-half the distance between the side edges of the front panel for overlaying the front panel when collapsed,
- the top edge of said front panel having a lip extending from the inner face of a predetermined dimension, and
- a top panel having an inner surface an an outer surface, a front edge, a rear edge and side edges and said side edges being spaced from one another a distance slightly greater than the distance between the side edge of said front panel and the distance between said front and rear edge of said top panel being spaced from one another a distance greater than the distance between the top and bottom edges of said side panel,
- hinge means connecting the front edge of the top panel to the front panel, and
- means to connect the panels together when the side panels are hingedly moved into a common plane parallel to the plane of the front panel and the top panel is moved into a plane parallel to said side panels and front panel, said recessed are provided in the top panel sized to receive feeding parts, said top panel includes flanges extending from the inner surface on the side and rear edges defining a threesided skirt and said front panel having a flange along the top edge extending away from said inner face, said flanges defining a receptacle for said side panels when said panels are hingedly moved into coplanar relation overlaying said inner face of said front panel and said top panel is hingedly moved into parallel alignment with said front panel.

4,065,196
POSITIVE ACTION FRONT RELEASE DRAWER SLIDE ASSEMBLY
Robert R. Stein, Mount Kisco, N.Y., assignor to Hardware Designers, Inc., Mount Kisco, N.Y.
Continuation-in-part of Ser. No. 654,238, Feb. 2, 1976, Pat. No. 3,995,927. This application Nov. 3, 1976, Ser. No. 738,586
Int. Cl.² A47B *88/16;* F16C *21/00*
U.S. Cl. 312—333 **8 Claims**

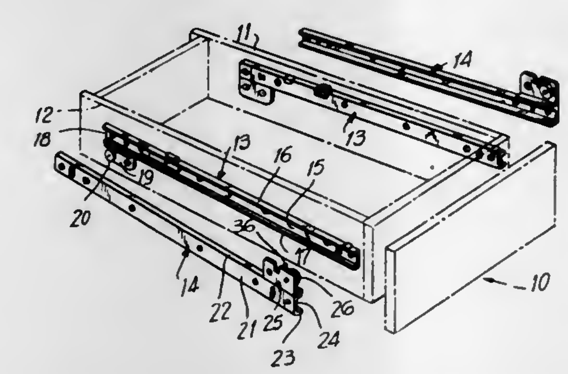

1. A front removable drawer slide assembly comprising, in combination, a drawer channel and a cabinet channel, said channels being elongate and generally U-shaped in transverse section, said channels each including a central web defining the branch of said U and a pair of spaced parallel track portions extending from the extremities of said branch and defining the legs of said U, said channels being disposed in vertically stacked parallel relation, with said webs being in lateral offset vertical planes and said branches extending in opposite directions, with the lower branch of the upper channel being in proximate spaced relation to the upper branch of the lower channel, an anti-friction roller mounted adjacent an extremity of each said channel, said rollers extending into the other said channels for slidably supporting said channels for translatory movement, a latch member movably mounted on one said channel, said latch member being shiftable between locking and unlocking positions, a stop member on the other said channel positioned to engage said latch member in the locking position thereof and limit separating movements of said channels, said latch member, in the unlocking position thereof, being disposed in the path of said roller of said other channel and being shifted to said locking position responsive to engagement with said roller.

4,065,197
ISOLATED PATHS CONNECTOR
Charles H. Kuist, Mendham, N.J.; Vincent Squitieri, Billerica, and Richard E. Seeger, Topsfield, both of Mass., assignors to Chomerics, Inc., Woburn, Mass.
Filed June 17, 1974, Ser. No. 479,668
Int. Cl.² H01R *13/48*
U.S. Cl. 339—17 M **2 Claims**

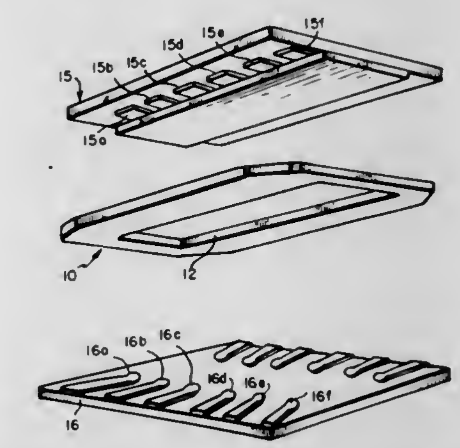

1. An electrical one piece connector in the form of a sheet having a thickness of between 1 to 100 mils and having top and bottom surfaces and which comprises a homogeneous mixture of a flexible insulator material binder and metal particles, said connector having means for providing at least when uncompressed a low through resistance of less than 1,000 ohms between opposite aligned points on said top and bottom surfaces as well as a high isolation resistance, which is greater than 100,000 ohms, along the top and bottom surfaces between points at a distance apart equal to five times the thickness of the connector between said top and bottom surfaces further characterized in that the connector exhibits said low through resistance through the volume between aligned opposed electrical contacts placed on opposite top and bottom surfaces thereof merely in surface contact therewith and said high isolation resistance between diagonal electrical contacts placed on opposite top and bottom surfaces thereof as well as between adjacent electrical contacts placed on the same surface thereof all merely in surface contact therewith at a distance apart equal to five times the thickness of the connector between said top and bottom surfaces, and in which the connector contain 9 to 18 volume percent of metal particles.

4,065,198
LED MOUNTING RETAINER AND DISPLAY
Thomas W. Jordan, Berkeley, Ill., assignor to Wescom, Inc., Downers Grove, Ill.
Filed Dec. 13, 1976, Ser. No. 749,740
Int. Cl.² H05K *1/18*
U.S. Cl. 339—17 D **14 Claims**

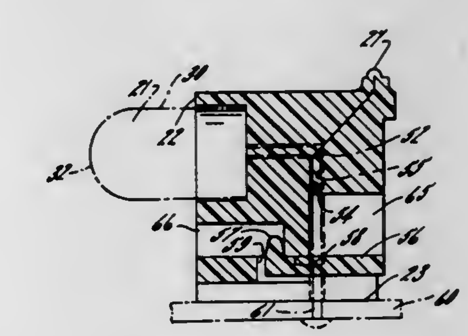

1. A retainer for mounting an LED of the type having leads projecting perpendicularly from a base, said retainer comprising a body portion, a locking portion movable with respect to said body portion from an open to a closed position locked to said body portion, seating means on the body portion for seating the LED, a supporting base substantially at right angles to said seating means, apertures through the seating means for

receiving said leads when the LED is seated and allowing said leads to project through said body portion, means on the locking portion for engaging the leads as the locking portion is moved toward said closed position to bend said leads toward said supporting base, said body portion and locking portion mating in said closed position to bend leads at substantially right angles for projection below said supporting base, thereby to form a right angle mount.

4,065,199
FLAT CABLE WIRING HARNESS AND METHOD OF PRODUCING SAME
Michael G. Andre, Palatine; Melvin J. Schmidt, Elk Grove Village, and Kenneth L. Osman, Chicago, all of Ill., assignors to Methode Electronics, Inc., Chicago, Ill.
Filed Feb. 11, 1977, Ser. No. 767,754
Int. Cl.² H01R *11/20*
U.S. Cl. 339—17 F **16 Claims**
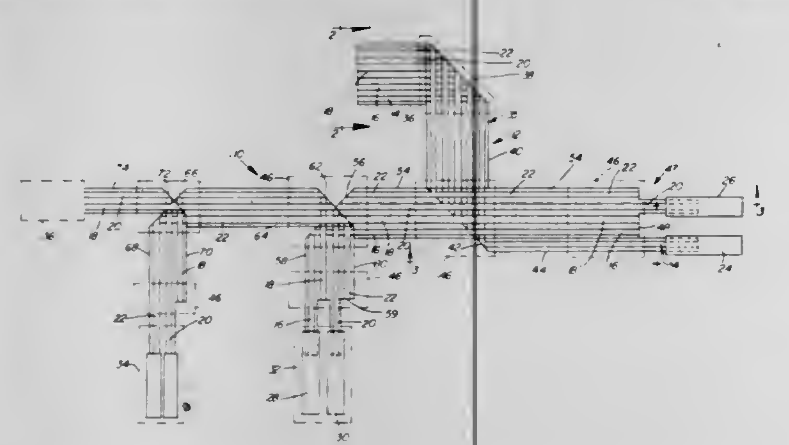
1. A cable harness assembly comprising:
a flat ribbon cable having a plurality of longitudinally extending conductors encapsulated in a longitudinally extending insulator for insulating said conductors from each other and from external engagement,
said cable folded at respective positions for extending said conductors in a selected direction to a first termination position at which said insulator is longitudinally slit to form a first projecting conductor extending from a fold edge of said cable,
a folded end on said projecting conductor for extending said conductor in the direction of said cable fold edge,
means establishing an electrical connection to the projecting conductor,
and a plurality of reverse bends in another conductor of said cable extending from said fold edge at the end of said slit and having a length substantially equal to the folded projecting portion of said projecting conductor for extending said one and other conductor in a common cable portion to another position.

4,065,200
MOUNTING RACK FOR CIRCUIT PANELS
Raymond W. D'Angelo, 18 Coventry Circle, North Haven, Conn. 06473
Filed Apr. 19, 1977, Ser. No. 788,803
Int. Cl.² H01R *13/62;* H05K *7/18*
U.S. Cl. 339—65 **1 Claim**

1. A mounting rack for circuit panels with oppposite end edges and a side edge, comprising a cage with opposite walls each of which has an aperture; at least one pair of identical opposite guide channels with a common median plane for sliding reception of a circuit panel with its end edges, of which each guide channel is formed by a pair of resilient metal leaves disposed side-by-side and bowed toward each other to leave them with apices intermediate their lengths, with the leaves of each pair being arranged symmetrically about said median plane and being with their ends secured to a cage wall, and the leaves of each pair having at their apices lateral fingers extending into the aperture in the cage wall to which said leaves are secured for limiting separating movement of said leaves; and a connector block mounted in said cage and having a groove in substantial alignment with said median plane, with a circuit

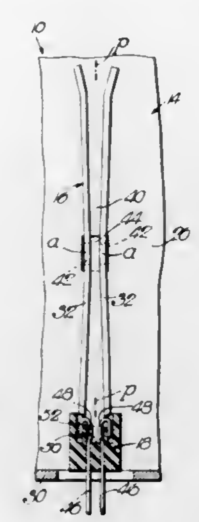

panel in said guide channel being tiltable about the apices of said leaf pairs as a fulcrum and being locked in position therein on sliding the circuit panel with its side edge into register with said groove.

4,065,201
CONNECTOR
Chander M. Wahi, Waseca, Minn., assignor to E. F. Johnson Company, Waseca, Minn.
Filed Nov. 19, 1976, Ser. No. 743,420
Int. Cl.² H01R *13/58*
U.S. Cl. 339—103 R **7 Claims**

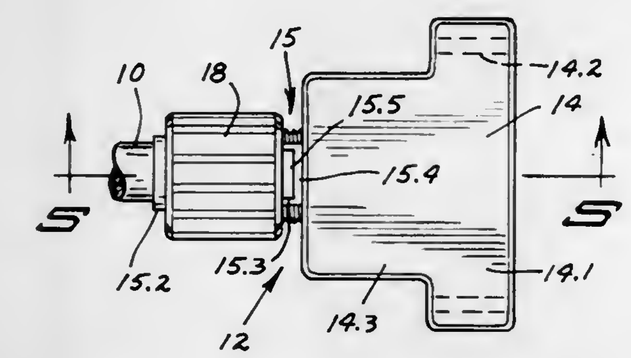

1. A cable connector for securely connecting an electric cable to the housing of an electric device and including an internally threaded nut and an integral body, the body having a rearwardly extending, elongated neck with an internal bore through which may be passed a cable, the neck being externally threaded along at least a portion of its length to receive the threaded nut and the walls of the neck having slots therethrough to provide at least one forwardly-extending ear movable radially inwardly and outwardly of the neck, the ear having a radial thickness at its forward end greater than the thickness of the adjacent walls of the neck, whereby, as the nut is threaded forwardly onto the neck, the at least one ear is cammed inwardly of the bore to firmly grasp a cable.

4,065,202
PROJECTION SYSTEM FOR DISPLAY OF PARALLAX AND PERSPECTIVE
Robert L. Kurtz, Huntsville, Ala., assignor to The United States of America as represented by the United States National Aeronautics and Space Administration, Washington, D.C.
Filed Nov. 6, 1975, Ser. No. 629,458
Int. Cl.² G02B *27/00*
U.S. Cl. 350—3.5 **6 Claims**

1. A three-dimensional holographic projection system comprising:

positioning means for positioning a holographic transparency in a position where light may be transmitted through it;
light source means for projecting a beam of monochromatic light along a movable path through a hologram positioned by said positioning means;
scanning and blanking means coupled to said light source means for causing said beam to be selectively and sequen-

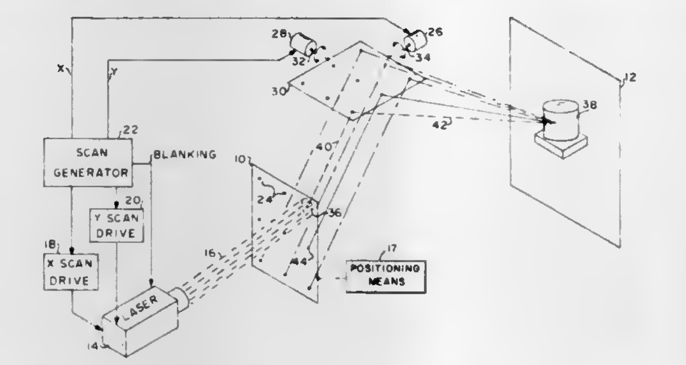

tially displaced to selectively strike said hologram at a plurality of selected perspective angles and said light to be blanked except when striking said hologram at said selected perspective angles;
a viewing screen; and
mirror means responsive to resulting displaced beams omitted from the holographic transparency for reflecting said beam in register on said screen.

4,065,203
COUPLERS FOR ELECTRO-OPTICAL ELEMENTS
James E. Goell, Roanoke, Va., and H. David Brandt, S. Hamilton, Mass., assignors to International Telephone and Telegraph Corporation, Nutley, N.J.
Filed Dec. 10, 1975, Ser. No. 639,546
Int. Cl.² G02B *5/14*
U.S. Cl. 350—96 C **20 Claims**

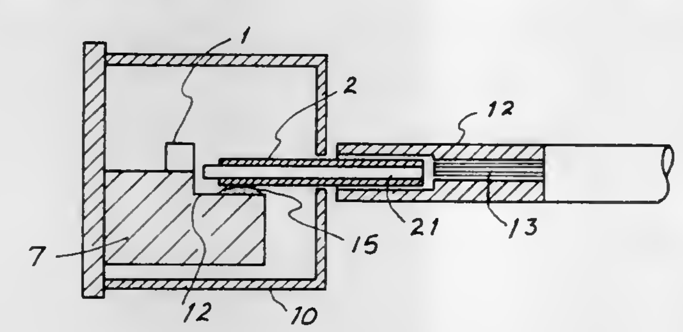

1. A coupler for connecting between optical fibers and electro-optical elements of the type having a supporting header comprising:
first coupling means for providing optical connection with said electro-optical elements a connector optical fiber within a support tube fixedly attached to the header; and
second coupling means for connecting between said optical fibers and said electro-optical elements when said fibers are connected with said second coupling means and said second coupling means are connected with said first coupling means, said second coupling means comprising a dual diameter tube for receiving the support tube at one end and at least one optical fiber at the other end for providing optical continuity between said at least one electro-optical element and said at least one optical fiber.

4,065,204
LATERAL TRANSFER RETROREFLECTORS
Morton S. Lipkins, 3 Nemeth St., Malverne, N.Y. 11565
Continuation-in-part of Ser. No. 475,133, May 31, 1974, Pat. No. 3,936,194. This application Jan. 29, 1976, Ser. No. 653,479
Int. Cl.² G02B *5/122*
U.S. Cl. 350—102 **8 Claims**

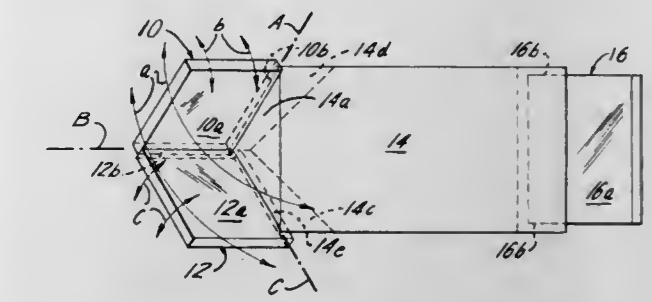

2. A hollow lateral transfer retroreflector, including first and second reflector plates having reflecting flat faces disposed to from a roof reflector, a third reflector plate having a reflecting flat face, and a central member, said third plate being united to a first portion of the central member and being disposed in relation to said roof reflector to constitute therewith a hollow lateral transfer retroreflector, a second portion of said central member spaced from said first portion having a mounting flat face parallel to the reflecting face of said third reflector plate, an edge of said second reflector plate abutting said mounting flat face, an edge of the first reflector plate abutting the reflecting flat face of said second reflector plate, and said mounting face having an edge abutting the reflecting flat face of said first reflector plate, each of said first and second reflector plates and said central member being united where they abut one another.

4,065,205
SHORT FOCAL LENGTH OPTICAL SYSTEM WITH LARGE APERTURE
Andor A. Fleischman, Northbrook, Ill., assignor to Bell & Howell Company, Chicago, Ill.
Filed July 27, 1976, Ser. No. 709,047
Int. Cl.² G02B *9/34, 9/62*
U.S. Cl. 350—216 **3 Claims**

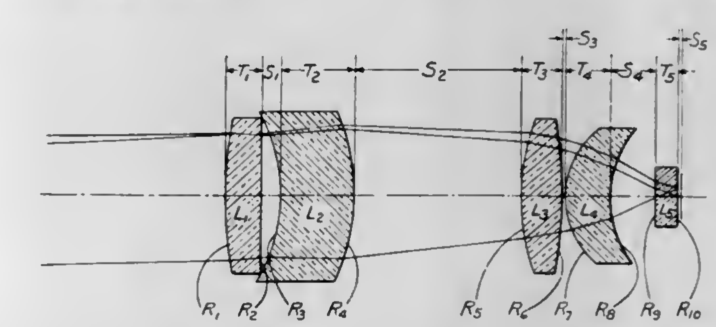

1. An optical system of short focal length and large effective aperture having substantially the following specification:

EFL = 8.26mm (.3253 inches)
Half Angle of Field = 2.58°
(Dimensions in Inches where applicable)

Lens	Radii	Thickness	Spacing	N_D	V
	R_1 = .9100				
L_1		T_1 = .0780		1.805	25.4
	R_2 = 52.8905				
			S_1 = .0410		
	R_3 = −.3670				
L_2		T_2 = .1580		1.494	66.1
	R_4 = .4500				
			S_2 = .3800		
	R_5 = .5000				
L_3		T_3 = .0910		1.494	66.1
	R_6 = .9966				
			S_3 = .0030		
	R_7 = .1780				
L_4		T_4 = .1000		1.805	25.4

-continued

EFL = 8.26mm (.3253 inches)
Half Angle of Field = 2.58°
(Dimensions in Inches where applicable)

Lens	Radii	Thickness	Spacing	N_D	V
	$R_8 = -.2170$				
			$S_4 = .1000$		
L_5	$R_9 =$ Inf.	$T_5 = .0433$		optical	material
	$R_{10} =$ Inf.				
			$S_5 = .0050$		

wherein the first column lists the lens elements numerically; the second column lists the respective radii of the elements, using the convention that convex surfaces have positive radii and concave surfaces have negative radii; the third column lists the respective thickness of the elements; the fourth column lists the axial spacings between adjacent elements; and the fifth and sixth columns list respectively the dispersion and refractive indices of the optical materials for the lens.

4,065,206
BALLISTIC PROTECTED PERISCOPE CONSTRUCTION

Gerald Tausch, Salem, Ohio, assignor to Miller-Holzwarth, Inc., Salem, Ohio

Filed June 21, 1976, Ser. No. 697,933
Int. Cl.² G02B *5/08*

U.S. Cl. 350—301 **6 Claims**

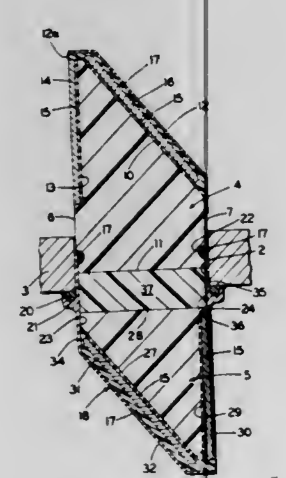

1. A periscope construction of the type having a protective housing and an optical system mounted within the housing, in which the optical system includes:
   a. a first transparent block of material forming an object viewing section having an object viewing surface a first reflective surface and a first end surface;
   b. a second transparent block of material forming an eyepiece viewing section having an eyepiece viewing surface, a second reflective surface, and a second end surface;
   c. said first and second transparent blocks being mounted at generally opposite ends of the protective housing, with the first and second reflective surfaces and the object and eyepiece viewing surfaces being generally parallel with respect to each other, respectively, and forming a parallelogram in cross section;
   d. the first and second end surfaces being spaced from each other and forming a void therebetween, said void being located within the protective housing and generally intermediate the reflective surfaces;
   e. shock absorbing means mounted within and filling the void between the first and second end surfaces of the blocks to reduce the transmission of shock waves between said blocks when the first block is struck by a projectile; and
   f. said shock absorbing means including a layer of soft and pliable optical adhesive which bonds the blocks together and which remains in a soft, rubbery, heavy gelatin state.

4,065,207
PROGRAMMABLE POWER ATTENUATOR FOR CONTINUOUS CO_2 LASERS

Peter D. Zavitsanos, Norristown; Joseph A. Golden, Pennsburg, and Frederick N. Alyea, King of Prussia, all of Pa., assignors to The United States of America as represented by the Secretary of the Army, Washington, D.C.

Filed Sept. 17, 1976, Ser. No. 724,039
Int. Cl.² G02B *5/24*

U.S. Cl. 350—312 **2 Claims**

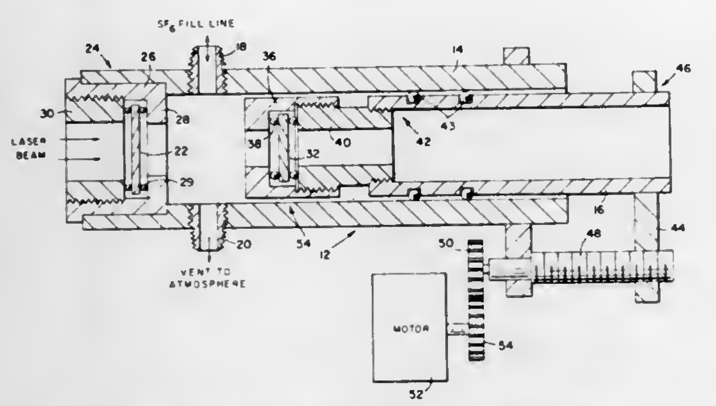

1. An optical cell of variable effective axial length comprising:
   a. an outer cylindrical cell having a fill and vent opening and a first transparent planar window fixedly secured to one end of said cylindrical cell;
   b. an inner cylindrical cell slidably carried in said outer cylindrical cell and having a second transparent planar window member secured therein to form a volume between said windows, said inner cylindrical cell including a first tubular member, a second tubular member having a first end in threaded relation with said first tubular member, a third tubular member having a first end in threaded relation with the second end of said second tubular member, the second end of said third tubular member being flanged with an opening therethrough, said flanged end being in spaced relation with the second end of said second tubular member to form a space therebetween to receive said second window therein;
   c. displacing means for moving said inner cylinder within said outer cylinder to vary the distance between said windows, said displacing means including a first support member secured to said inner cylinder, a second support member secured to said outer cylinder, a threaded shaft carried in said first and second support members, and, an electric motor disposed for rotation of said threaded shaft in said first and second support members to control the rate and distance said windows are separated thereby controlling the incident radiation passing through said windows; and,
   d. a radiation attenuating fluid disposed in said volume.

4,065,208
OPHTHALMOSCOPE

Thomas A. Currey, 87 Wallace Road, Memphis, Tenn. 38117

Filed Oct. 29, 1974, Ser. No. 518,612
Int. Cl.² A61B *3/12*

U.S. Cl. 351—6 **3 Claims**

1. An ophthalmoscope for allowing an observer to view the retina of a patient's eye during retina surgery, said opthalmoscope comprising:
   a. a straight, tubular body member having a first end portion and a second end portion;
   b. objective means attached to said first end portion of said body member for placement over the patient's eye, said objective means including a contact lens member fixedly attached to said first end portion of said body member for contacting engagement with the cornea of the patient's eye;
   c. ocular means attached to said second end portion of said body member for allowing the observer to view the patient's eye through said objective means;
   d. magnification means positioned in said body member between said objective means and said ocular means for causing the patient's eye to be magnified as the observer views the patient's eye through said ocular means, said magnification means including a plurality of magnification lens for varying the magnification of the patient's eye;
   e. light means for directing light through said objective means and against the patient's eye to allow the patient's eye to be illuminated, said light means including a light source and a fiber optic light-conducting member for

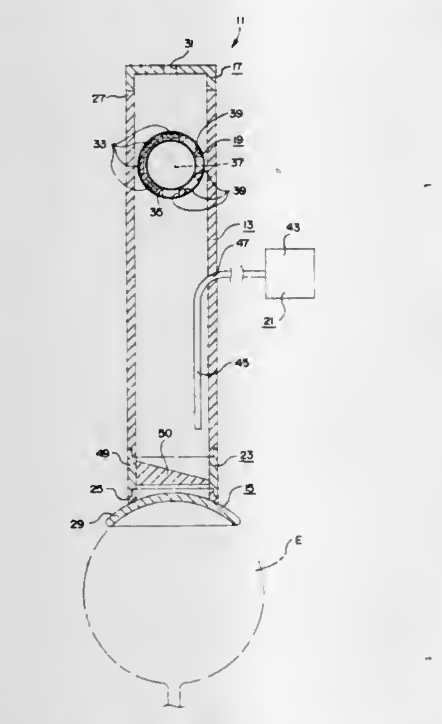

guiding the light from said light source to the patient's eye; and;
   f. deflection means positioned in said body member adjacent said objective means for directing the light from said fiber optic light-conducting member and the line of sight from said ocular means into the retina of the patient's eye to allow the observer to clearly view the retina of the patient's eye, said deflection means including means for allowing the angle the light from said fiber optic light-conducting member and the line of sight from said ocular means are being directed into the retina of the patient's eye to be changed thereby allowing the observer to view a particular area of the retina of the patient's eye.

4,065,209
CASSETTE REWIND STOP CONTROL FOR A MOVIE CAMERA

Otto Freudenschuss, Vienna, Austria, assignor to Karl Vockenhuber and Raimund Hauser, both of Vienna, Austria

Filed Mar. 29, 1976, Ser. No. 671,549
Claims priority, application Austria, Mar. 28, 1975, 2408/75
Int. Cl.² G03B *23/02*

U.S. Cl. 352—72 **4 Claims**

1. A movie camera of the type arranged to accommodate two different types of cassettes having surface portions characteristic of each type, at least one of the cassettes having a releasable rewind stop for at least one of the two film spools in the cassette, comprising, in combination, means for releasing the rewind stop on the one cassette, an actuating member movable between an operative position for actuating said rewind stop releasing means and an inoperative position for deactuating said rewind stop releasing means, a movably mounted scanner operatively associated with said actuating member for engagement by a cassette of a first type inserted into the camera, said scanner being movable into one position by insertion of a cassette of the first type in the camera to move said actuating member into said operative position for actuating said rewind stop releasing means for releasing the cassette rewind stop and into a second position upon insertion of a cassette of the second type into the camera to release said actuating member from said operative position into said inoperative position for deactuating said rewind stop releasing means.

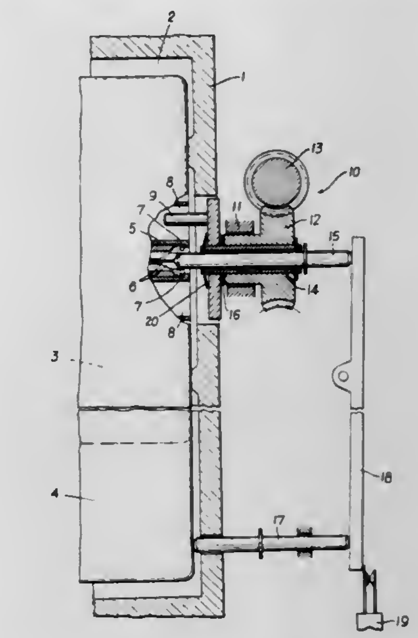

4,065,210
VACUUM CONTACT PRINTER

Ralph N. Milburn, 3702 Chatham Road, Ellicott City, Md. 21043

Filed July 12, 1976, Ser. No. 704,363
Int. Cl.² G03B *27/20*

U.S. Cl. 355—91 **19 Claims**

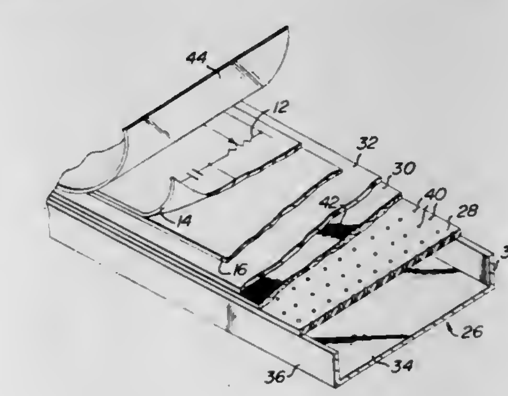

1. A contact printer for printing indicia formed on a translucent drawing sheet on a photo-sensitized sheet, comprising:
   a. light means for passing light consecutively through said drawing sheet to said photo-sensitized sheet;
   b. light drive means for linearly displacing said light means in a plane parallel to said drawing and photo-sensitized sheets;
   c. vacuum chamber having a vacuum pump for maintaining a pressure drop from an external to an internal environment of said vacuum chamber, said sheets being mounted adjacent an upper wall of said vacuum chamber, said wall having a first plurality of openings passing therethrough; and,
   d. sheet mounting means for securing said sheets to said upper wall in fixed planar relation, said sheet mounting means being secured to said upper wall of said vacuum chamber for distributing pressure drop load forces acting on said sheets over an extended surface area of said sheets, said sheet mounting means including load distribution means secured to said upper wall of said vacuum chamber, said load distribution means having a second plurality of through openings passing therethrough, said sheet mounting means further including sheet contact means adjacently positioned to an upper surface of said load distribution means, said sheet contact means being porous.

4,065,211
PRECISION X-RAY DIFFRACTION SYSTEM INCORPORATING A LASER ALIGNER
John R. Vig, Colts Neck, N.J., assignor to The United States of America as represented by the Secretary of the Army, Washington, D.C.
Filed Mar. 1, 1976, Ser. No. 662,655
Int. Cl.² G01B *11/26;* G01N *21/00*
U.S. Cl. 356—152 **3 Claims**

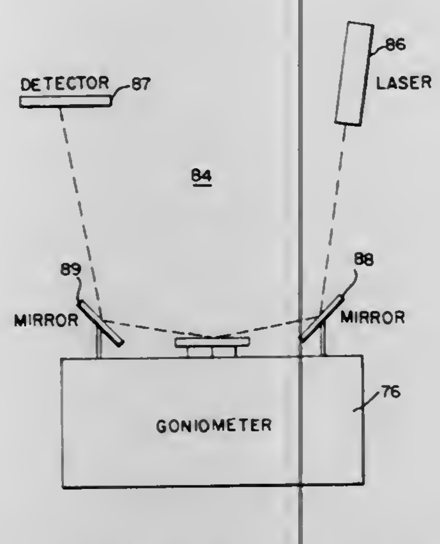

1. A method by which the angle between an atomic plane of a crystal plate and the face of the crystal plate can be determined by means of a goniometer instrument including an X-ray detector arranged to receive that portion of an incident X-ray beam reflected from said crystal plate, said crystal plate being mounted for independent rotation about three mutually perpendicular axes, a first axis being normal to the instrument plane defined by said X-ray beam and the center of said X-ray detector, a second axis being normal to the crystal plate face, and a third axis perpendicular to said first and second axes, comprising the steps of:

a. directing a collimated optical beam onto the crystal plate face for reflection therefrom onto a position sensing photodetector;
b. sequentially and controllably adjusting the rotation of said crystal plate about said first and second axes to discrete controlled positions at each of which a peak reading of the X-ray detector is obtained; and
c. adjusting the rotation of said crystal plate about said first and third axes after each of the adjustments about said second axis to obtain a null reading of said photodetector indicating correction of any wobble of said second axis introduced during step (b).

4,065,212
INSPECTION TOOL
James Garman Belleson, Hillsborough, Calif., and Kendall Clark, Poughkeepsie, N.Y., assignors to International Business Machines Corporation, Armonk, N.Y.
Filed June 30, 1975, Ser. No. 592,154
Int. Cl.² G01B *11/00*
U.S. Cl. 356—167 **17 Claims**

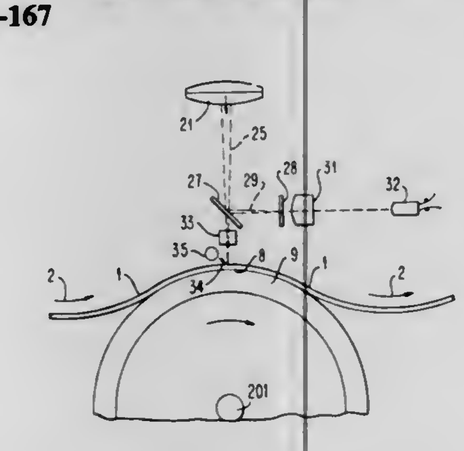

1. An inspection tool comprising: means to feed a workpiece to be inspected into a work zone, said workpiece having a pattern thereon to be inspected; a source of coherent light and means to effect a sweep of said coherent light across said work zone; a grating having a plurality of parallel interdigitated light receiving and light transmitting lines thereon; means intermediate said source of coherent light and said work zone to reflect at least a portion of said coherent light into a light beam onto and traversing said grating across said lines with said lines extending at an angle transverse said light beam imaging thereon as the light is swept across said work zone; light detector means positioned to continuously receive and sense light transmitted by said light transmitting lines of said grating so that the position of said sweep of coherent light across said work zone may be determined; and means to alter said angle of said lines transverse said reflected light beam as it sweeps across said lines on said grating to compensate for differences in the position of the pattern on a workpiece relative to a nominal pattern position.

4,065,213
APPARATUS FOR AND METHOD OF INSPECTING TUBULAR TEXTILE GOODS
Curt Lennart Nyman, Billdalsgaten 24, 502 64 Boras, Sweden
Continuation of Ser. No. 81,761, Oct. 19, 1970, abandoned. This application July 22, 1976, Ser. No. 707,755
Claims priority, application Sweden, Oct. 22, 1969, 14443/69
Int. Cl.² G01N *21/16*
U.S. Cl. 356—200 **17 Claims**

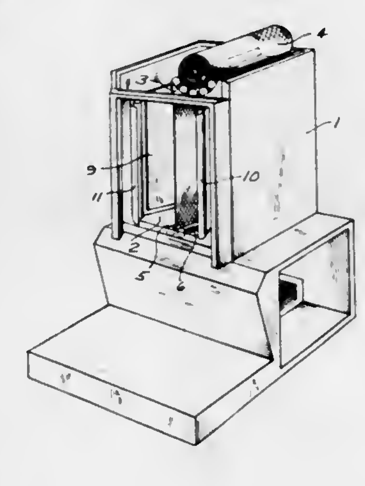

1. In an apparatus, for use in the inspection of tubular textile goods, of the type including means for guiding longitudinally advancing tubular textile goods along a path of travel, and means disposed within the longitudinally advancing tubular textile goods for flattening a portion of the longitudinally advancing tubular textile goods into a web-like configuration having a pair of major opposed spaced sides jointly comprising the entire surface area of the flattened portion of the advancing tubular textile goods in order to permit simultaneous inspection of substantially the entire surface of the advancing tubular textile goods as they advance by simultaneously inspecting the pair of major opposed sides of the flattened portion of the advancing tubular textile goods, the improvement which comprises:

said means for guiding comprising means defining an open elongated narrow slot unobstructed by any structural elements of the apparatus for receiving the longitudinally advancing tubular textile goods in the flattened web-like configuration; and
said means for flattening a portion of the longitudinally advancing tubular textile goods comprising a plate-like member disposed within the tubular textile goods and dimensioned to stretch a portion of the tubular textile goods to form the flattened portion of the same and said plate-like member being sufficiently thick to prevent its passage through the slot, said plate-like member being disposed in use within the tubular textile goods above and supported by said means defining an open elongated narrow slot to flatten a portion of the tubular textile goods as they progressively longitudinally advance over said plate-like member and through said open narrow elongated slot, said tubular textile goods conforming to the shape of the plate-like member as they advance whereby the flattened portion of the tubular textile goods is formed above said means defining an open elongated narrow slot and the major opposed sides of the flattened portion converging as the tubular textile goods advance into the open elongated slot and pass between said plate-like member and said means defining an elongated slot whereby said plate-like member forms the flattened portion of the advancing tubular textile goods while being supported by said means defining an open elongated narrow slot and is maintained positioned above the slot by the advancing tubular textile goods.

4,065,214
PORTABLE WAX APPLICATOR AND REMOVER
Emill F. Daum, 2911 Via San Gorgonio, San Clemente, Calif. 92672; Terry R. Daum, 34581 Via Verde, Capastrano Beach, Calif. 92624, and Dennis Daum, 2911 Via San Gorgonio, San Clemente, Calif. 92672
Filed Aug. 30, 1976, Ser. No. 718,460
Int. Cl.² A46B *11/08;* A47L *13/32;* B43M *1/02*
U.S. Cl. 401—2 **7 Claims**

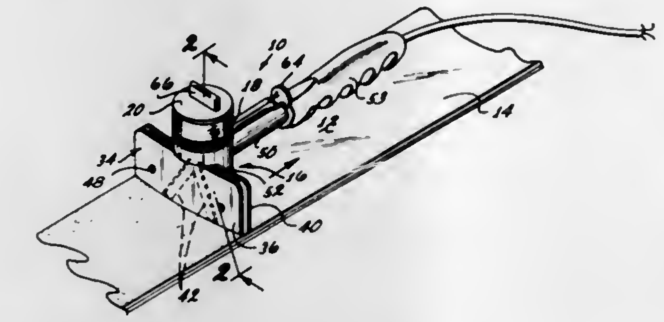

1. A portable wax applicator comprising:
a housing member having an open upper surface for containing wax to be applied, said housing member having an aperture through the bottom wall thereof;
a handle attached to and extending from said housing member;
a spreader member positioned transverse to said handle and attached to said bottom wall and extending downward therefrom; and
a heater means;
said spreader member comprising a pair of flat plate members secured together with said heater means sandwiched therebetween, one of said plate members having wax distributing channels in alignment with and extending from said aperture in said bottom wall to the lower periphery of said spreader, said heater element having substantially the same surface area as said plate members.

4,065,215
WRITING INSTRUMENT
Katsumi Otsuka, Funabashi, Japan, assignor to Toplan Manufacturing Inc. and Teibow Company Limited, both of, Japan
Filed Jan. 14, 1976, Ser. No. 648,840
Claims priority, application Japan, Jan. 14, 1975, 50-7783[U]
Int. Cl.² B43K *8/00*
U.S. Cl. 401—199 **4 Claims**

1. In a writing instrument comprising a cylindrical casing having a rear end and a forward end axially spaced apart from each other, an ink reservoir in said casing, and a writing nib having its rear end in said ink reservoir and its forward end projecting from the forward end of said casing, said nib having a rounded tip portion extending forwardly from said forward end of the casing and having an inner capillary conduit which extends axially through the nib;
the improvement wherein said inner capillary conduit forms, in a transverse cross section of the nib, at least one straight slit which extends from the center of the cross section toward the outer periphery of the nib in the substantially radial direction of the cross section, and forms a plurality of radially spaced apart arc shaped slits which are coaxial

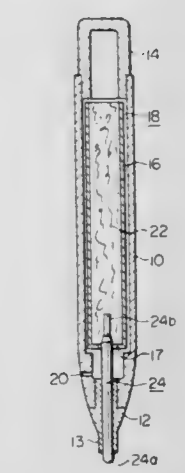

with each other about said center, a part of each of said arc shaped slits interconnecting with said straight slit, said radially spaced apart arc shaped slits being opened to a rounded outer surface of the tip portion.

4,065,216
ADJUSTABLE FAUCET HANDLE ASSEMBLY
Merritt J. Nelson, Sparta, Mich., assignor to Zin-Plas Corporation, Grand Rapids, Mich.
Filed Sept. 17, 1976, Ser. No. 725,085
Int. Cl.² F16B *1/00*
U.S. Cl. 403—4 **8 Claims**

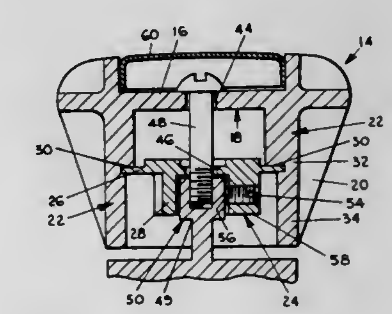

1. A faucet handle assembly comprising:
a skirt on the handle having a hollow interior and retaining sides;
an insert; and
two sets of alterate interengaging means on the skirt and insert each of the sets having means for preventing relative rotation in clockwise and counterclockwise directions between the skirt and insert, said interengaging means being so shaped as to provide one axial position of the insert within the skirt when one interengaging means is operative and providing a second axial position of the insert when the second interengaging means is operative.

4,065,217
NOSE TIP LOCKING DEVICE
John A. Andersen, and Gene R. Harty, both of Albuquerque, N. Mex., assignors to The United States of America as represented by the United States Energy Research and Development Administration, Washington, D.C.
Filed Nov. 24, 1976, Ser. No. 744,472
Int. Cl.² F16B *1/00*
U.S. Cl. 403—24 **5 Claims**

1. A mechanism for releasably locking a nose tip to a vehicle comprising:
a shaft having first and second ends, the first end of said shaft comprising a ratchet and the second end of said shaft comprising a pinion;

means comprising a pawl, operably connected to said first end of said shaft, for engaging said ratchet, said ratchet being turnable in only one direction while engaged with

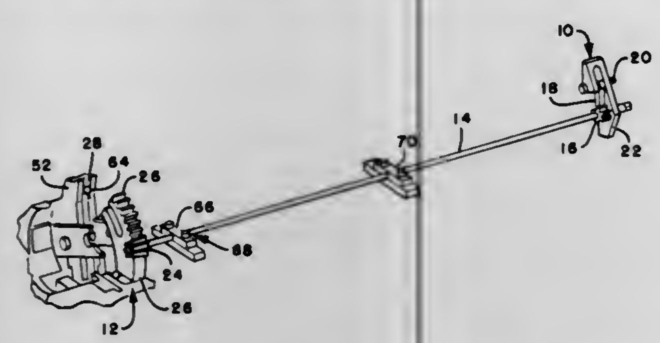

said pawl, but being turnable in the other direction when said pawl and said ratchet are out of contact; and
means for releasably locking said nose tip operably connected to said pinion on said shaft.

4,065,218
SEISMIC BRACE
John D. Biggane, Oakland, Calif., assignor to Super Strut, Inc., Oakland, Calif.
Filed Nov. 10, 1976, Ser. No. 740,557
Int. Cl.² F16C *11/00*
U.S. Cl. 403—71 **2 Claims**

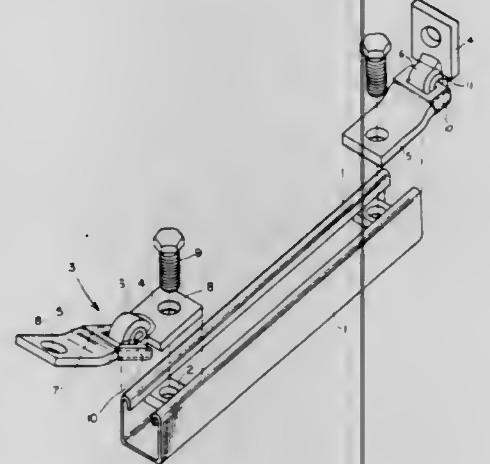

1. An articulated connection comprising
a pair of flat plates,
one plate having a transverse slot adjacent one end thereof,
a tongue on one end of the other plate inserted through said slot, turned upon itself and having its end welded to said other plate,
an acoustical snubber coating bonded to all sides of said slot and to all surfaces of said one plate adjacent said slot,
each plate having a hole adjacent its other end for receiving a securing element,
and a member of substantially U-shaped cross-section,
a nut fixed near each end of said member, and a bolt extended through said hole of said one plate and secured in said nut thereby to form a pivotal connection for said end of said member.

4,065,219
SHAFT ADAPTER
Fred Levine, P.O. Box 380876, Miami, Fla. 33138
Filed Aug. 26, 1976, Ser. No. 718,039
Int. Cl.² F16D *1/00*
U.S. Cl. 403—287 **3 Claims**

1. In combination with a fan motor having a shaft and with a fan blade, a shaft adapter for mounting the fan blade on the shaft of the fan motor, the shaft adapter comprising an elongated member having a pair of spaced ends, a socket portion forming one of the ends and a shaft portion forming the other of the ends, with the socket portion being arranged for receiving a shaft of a fan motor for rotation with the shaft, and the shaft portion being arranged for mounting a fan blade for rotation with the member, the socket portion being provided with a receptacle arranged for receiving the shaft of the fan motor, and wherein the shaft portion includes a longitudinally

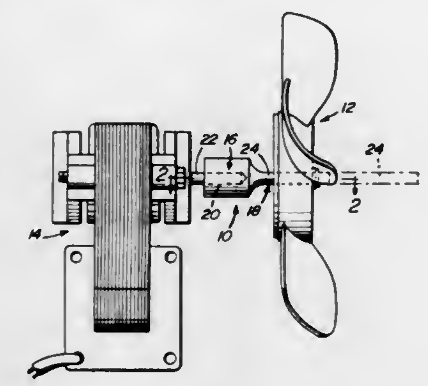

extending shaft, there being a plurality of adapters forming a set, each of the adapters having a receptacle of a diameter equal to the diameter of the receptacle of the other adapters, and a shaft having a diameter different from the diameters of each of the other adapters.

4,065,220
STRUCTURAL SYSTEM CONNECTION
Wayne Ruga, 2163D Coosawattee Road, Atlanta, Ga. 30319
Filed July 16, 1976, Ser. No. 705,885
Int. Cl.² F16B *7/04*
U.S. Cl. 403—169 **8 Claims**

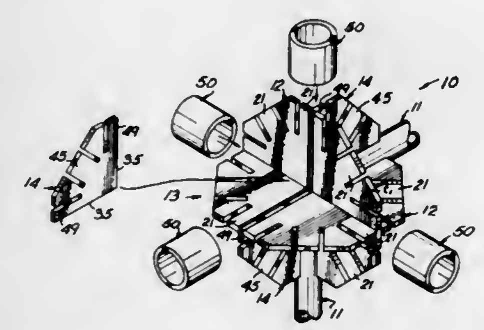

1. An interlocking structural system comprising:
a plurality of tubular strut members defining a central opening in the ends thereof of a prescribed diameter; and,
at least one connector for selectively interconnecting said plurality of tubular strut members, said connector including a plurality of removably interconnected plate members, one of said plate members lying generally in a first plane; at least a second of said plate members lying generally in a second plane intersecting said first plane so that said plate members intersect along a first common line and at least a third of said plate members lying generally in a third plane transversely intersecting said first and second planes at a point of intersection intermediate the ends of said first common line, intersecting said first plane along a second common line and intersecting said second plane along a third common line; each of said plate members defining a plurality of connector tangs thereon generally radially oriented with respect to said plate member, one of said connector tangs on said one of said plate members intersecting one of said connector tangs on said another of said plate members along one of said common lines, said connector tangs sized to be received in said central opening in the end of one of said strut members so that said strut member can be slipped over said intersecting connector tangs to connect said strut member to said connector and to hold said plate members together whereby said connector, when assembled, supports said tubular struts simultaneously with said tubular struts holding said connector assembled.

4,065,221
CLAMP FOR SHEATHED ROD, STRAND OR ROPE
Stephen Cawthorne, Wadworth, near Doncaster, England, assignor to Bridon Limited, Yorkshire, England
Filed Dec. 3, 1975, Ser. No. 637,240
Claims priority, application United Kingdom, Dec. 3, 1974, 52211/74
Int. Cl.² F16G *11/00*
U.S. Cl. 403—284 **9 Claims**

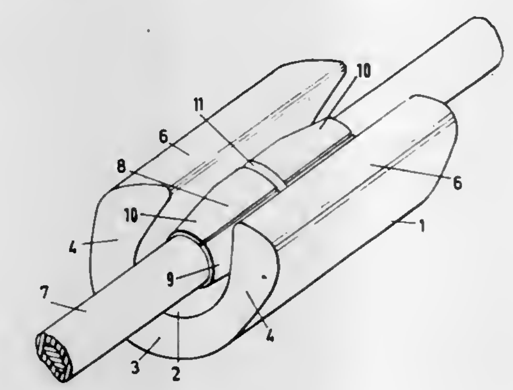

1. A clamp for application to a plastics-sheathed line, comprising a hard tubular element divided longitudinally into at least two separable parts, retaining means for holding parts of said tubular element together, and a ductile metallic elongate clamp body longer than said tubular element and having a longitudinal channel which receives said tubular element said longitudinal channel being of substantially U-shaped cross-section and having side walls whose thickness increases between the bottom and the mouth of said channel.

4,065,222
POT BROACH
Eugene J. Bistrick; Axel B. Abrahamsson, both of Warren; Andrew J. Szewczyk, Harper Woods; Frank A. McCabe, Detroit; Richard A. Schlaf, Sterling Heights, and Leonard A. Gabriele, Warren, all of Mich., assignors to Lear Siegler, Inc., Santa Monica, Calif.
Filed Oct. 20, 1976, Ser. No. 734,301
Int. Cl.² B26D *1/00*
U.S. Cl. 407—18 **9 Claims**

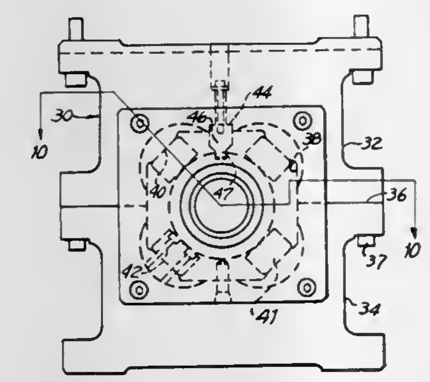

1. A pot broach assembly for cutting a multiplicity of gear teeth on the periphery of an initially cylindrical blank in a single pass, said assembly comprising
a longitudinally segmental rigid tubular support body,
a first series of flat sided abutting internally toothed cutting rings, each ring having a multiplicity of cutting teeth arranged in a single circumferentially extending array, and
a second series of flat sided abutting locating and support rings, said second series rings having internally open, radially extending, circumferentially spaced slots, flat sided elongated sticks received in said slots, said sticks having progressively stepped cutting teeth adapted to remove material from the bottom of tooth spaces cut by the cutting teeth of said first series of rings.

4,065,223
DISPOSABLE CUTTING INSERT AND TOOL HOLDER THEREFOR
Stanford C. Nelson, 8 S. Merrill Ave., Park Ridge, Ill. 60068
Filed July 31, 1975, Ser. No. 600,264
Int. Cl.² B26D *1/00;* B23B *29/00*
U.S. Cl. 407—114 **3 Claims**

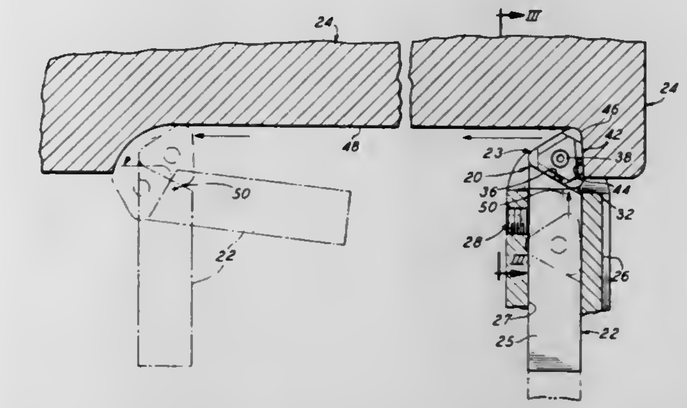

3. An indexible carbide cutting tool insert comprising a pair of parallel spaced mounting surfaces and three side walls disposed at uniform angles relative to one another and extending perpendicularly between said parallel mounting surfaces and forming cutting edges at the juncture of each face and side wall, each side wall being joined to an adjacent side wall by a nose-cutting radius with each nose-cutting radius having a pair of spaced cutting flats formed thereon and extending between the parallel mounting surfaces and providing a cutting edge flat at the juncture with each parallel mounting surface, each parallel mounting surface of the cutting tool insert including a stepped nose chip breaker formed adjacent each nose-cutting radius and parallel to the planes of said parallel mounting surfaces, a stepped chip breaker formed along each side wall for cooperation therewith parallel to the planes of said parallel mounting surfaces and extending between each pair of said nose chip breakers, said nose chip breakers and said chip breakers formed along said mounting surfaces and extending along said side walls being disposed at different elevational levels to provide a stepped relationship therebetween.

4,065,224
TWIST DRILLS
Keith Siddall, Sheffield, England, assignor to Osborn-Mushet Tools Limited, Sheffield, England
Continuation of Ser. No. 579,085, May 19, 1975, abandoned. This application Oct. 7, 1976, Ser. No. 730,442
Claims priority, application United Kingdom, May 17, 1974, 22130/74
Int. Cl.² B23B *51/00*
U.S. Cl. 408—230 **6 Claims**

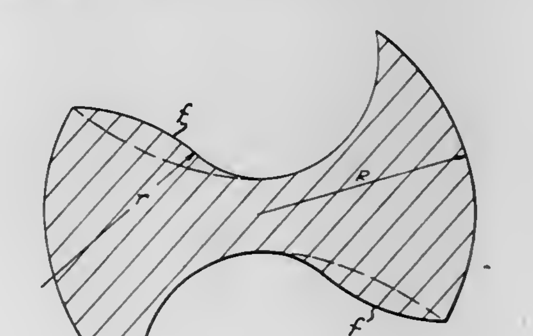

1. A twist drill having a cross-sectional shape which is convex in the surfaces of the drill faces, the convexity being of such an extent that it conforms substantially to a radius of between 0.9 and 1.2 of the drill radius, the lip rake angle being substantially constant along the cutting edges radially out-

wards of the core portion of the drill, the helix angle being between 25° and 45°, and the point angle being between 90° and 150°, whereby the cutting edges are curved but contained in the surface of an imaginary cone so that the drill can be sharpened on a conventional machine.

4,065,225
MULTIVANE WINDMILL
William D. Allison, 39 Radnor Circle, Grosse Pointe Farms, Mich. 48236
Filed Apr. 22, 1976, Ser. No. 679,157
Int. Cl.² F03D *1/02, 7/04*
U.S. Cl. 416—121 **6 Claims**

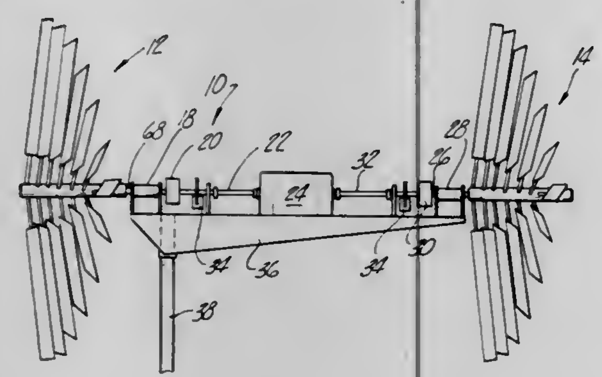

1. A windmill comprising; a rotor rotatable on a horizontal axis extending in the direction of the wind, said rotor comprising a plurality of pairs of diametrically opposed vanes, said vanes being pitched equally and in the same direction to cause rotation of the rotor in one direction, each pair of vanes progressing rearwardly away from the forward end of the axis being offset circumferentially relative to the preceding pair of vanes and in the direction of rotation of the rotor, said rotor including a hub assembly including an axially extending torque member, a support member for each pair of vanes extending radially and in opposite directions from said torque member, and a shaft passing through all of said support members and retaining said support members fixed relative to said torque member.

4,065,226
WATER WELL MONITOR
Gordon M. Campbell, 17700 N. Highway 101, Willits, Calif. 95490
Filed Dec. 1, 1976, Ser. No. 746,295
Int. Cl.² F04B *49/04*
U.S. Cl. 417—40 **5 Claims**

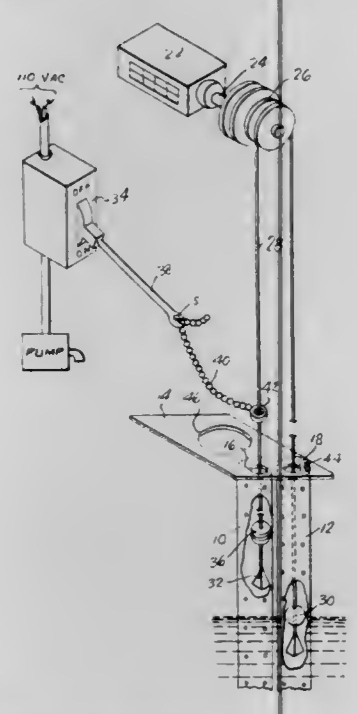

1. A well monitor comprising in combination a mechanical counter, a rotatable shaft actuating said counter, a sheave on said rotatable shaft, a drive-line passing over said sheave and having a first end of said drive-line depending from one side of said sheave to extend down the well, a float secured to the end of said first end adapted to float on the surface of the water in the well, a second end of said drive-line depending from the other side of said sheave to extend down into the well, a weight on said second end of said drive-line, said sheave having a circumference such that when a unit of lengths of said drive-line passes over said sheave, said counter indicates numerically the length of drive-line that has passed to indicate changes of the depth of water in the well, a cut-off safety switch for turning off a pump motor disposed in the well, and means to actuate said switch or deenergize said pump comprising a heavy ring loosely mounted about said second end of said drive-line, a length adjustable flexible means connected to said ring, a lever connected to said length adjustable flexible means at one extremity, and to said switch at the other, and a tripping disk clamped onto said second end of said drive-line below said heavy ring, said tripping disk serving to raise said heavy ring upwardly as the water level in the well falls, and to lower said heavy ring as the water level in the well rises.

4,065,227
CONTROL CIRCUIT
Ronald N. Rose, 5960 Main St. NE., Minneapolis, Minn. 55432
Filed Aug. 17, 1976, Ser. No. 715,190
Int. Cl.² F04B *49/00;* G02B *27/00;* H03K *3/42*
U.S. Cl. 417—45 **9 Claims**

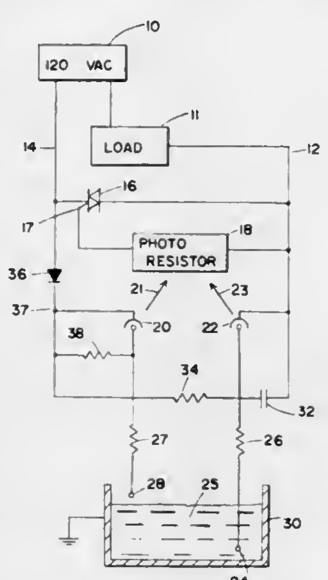

1. A control circuit for maintaining a medium between upper and lower limits comprising:

upper and lower limit probes for detecting the medium at said upper and lower limits respectively;

medium control means to move said medium at least between said upper and lower limits;

a power source;

a switching means controlled by a radiation sensitive means, said medium control means and said switching means connected in series across the power source;

a first radiation producing means connected to and operable by the voltage from the connection point between the medium control means and the switching means, said first radiation producing means controlled by a signal from said lower limit probes; and

a second radiation producing means connected to the circuit on the other side of the switching means from said first radiation producing means and controlled by said upper limit probe, both of said radiation producing means situated to direct radiation at the radiation sensitive means.

4,065,228
HYDRAULIC CONTROL FOR VARIABLE DISPLACEMENT PUMPS
William D. McMillan, Joliet, Ill., assignor to Caterpillar Tractor Co., Peoria, Ill.
Filed Feb. 24, 1977, Ser. No. 771,506
Int. Cl.² F04B *49/00*
U.S. Cl. 417—212 **5 Claims**

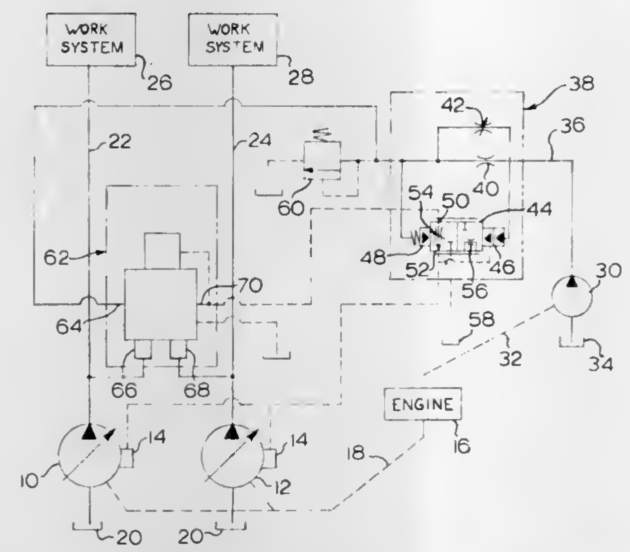

1. In a hydraulic system for controlling the output of at least one variable displacement pump driven by a single prime mover, the combination of:

a source of pilot fluid under pressure including a fixed displacement pump adapted to be driven by the prime mover proportional to the speed thereof;

means defining an underspeed control valve connected to said source and having an inlet and an outlet adapted to be connected to the variable displacement pump (s) for controlling the displacement thereof; and

load sensing means having an input connected to said source and adapted to be associated with said variable displacement pump(s) for sensing the loading thereon, and having an output connected to said inlet for directing a fluid signal thereto proportional to a sensed load;

whereby changes in speed of the prime mover will not affect displacement of the variable displacement pump (s) unless it is loaded in excess of a predetermined amount.

4,065,229
VARIABLE CAPACITY RADIAL-4 COMPRESSOR
Dennis A. Black, Dayton, Ohio, assignor to General Motors Corporation, Detroit, Mich.
Filed Oct. 1, 1976, Ser. No. 728,545
Int. Cl.² F04B *1/10, 49/00*
U.S. Cl. 417—270 **4 Claims**

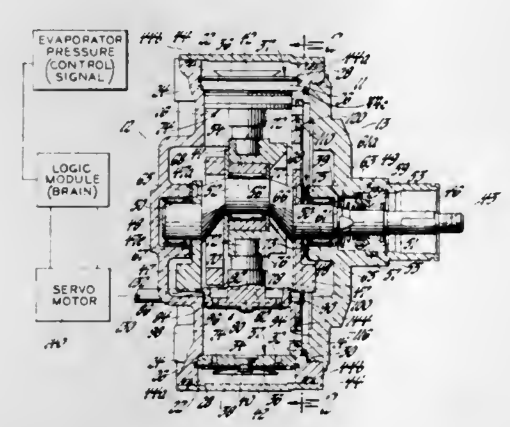

1. A radial compressor of the type including a cylinder housing having a unit axis and cross bores including cylinder walls therein along axes normal to each other forming compression chambers, the axes of said cylinder bores intersecting in a common transverse plane diametrical to said cross bores; a drive shaft on said unit axis rotatably mounted in the closed ends of said housing with said unit axis normal to said transverse plane at the intersection of said cross bore axes, a piston slidable in each of said bores, means forming inlet and outlet valves for said compression chambers, means in said housing operatively related to the pistons to reciprocate the pistons in said bores as said shaft is rotated, said cylinder housing being formed to include suction and discharge cavities, wherein the improvement comprises a circular recess being formed in one end of said housing having a modulator port surface coaxial with said unit axis; each cylinder side wall having housing port means therethrough for conveying gas from said bores to said suction cavity, said housing port means having their exits located in said modulator surface, a modulator ring being mounted in said recess for selectively opening and closing said port means by the rotary adjustment of the ring relative to said port means, means for rotating said ring in either direction to provide said rotary adjustment for controlling the effective output of said compressor, said modulator ring having a plurality of openings therein of varying size and operative to register in one manner respectively with the housing port means of each bore upon rotation of said ring to a first position, whereby each of the housing port means is open allowing gas to flow from the compression chamber of each bore to said suction cavity so that a minimum of pumping work is done on the gas, and said modulator ring openings operative to register in a second manner respectively with the housing port means of each bore upon rotation of said ring in one direction a predetermined angular distance to a second position, whereby said ring closes each of said port means so that said compressor pumps at maximum capacity.

4,065,230
RECIPROCATING INFUSION PUMP AND DIRECTIONAL ADAPTER SET FOR USE THEREWITH
Walter A. Gezari, Killingworth, Conn., assignor to Hart Associates, Inc., East Hartford, Conn.
Continuation-in-part of Ser. No. 541,882, Jan. 17, 1975, abandoned. This application Oct. 24, 1975, Ser. No. 625,581
Int. Cl.² F04B *9/08, 35/02*
U.S. Cl. 417—317 **18 Claims**

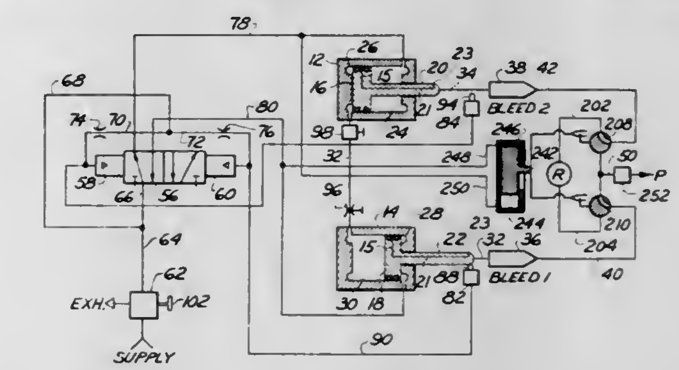

1. An infusion pump including:

a first cylinder;

a second cylinder;

first piston means in said first cylinder dividing said first cylinder into first and second chambers;

second piston means in said second cylinder dividing said second cylinder into first and second chambers;

first rod means connected to said first piston means and extending out of said first cylinder, said first rod means being adapted for connection to the plunger of a syringe;

second rod means connected to said second piston means and extending out of said second cylinder, said second rod means being adapted for connection to the plunger of a syringe;

hydraulic conduit means connecting said first chamber of said first cylinder to said first chamber of said second cylinder for fluid communication therebetween;

incompressible fluid means in said first chamber of each of said cylinders and in said hydraulic conduit means;
actuator means for positioning valve means to control the flow of a fluid to and from said syringes;
third cylinder means;
third piston means in said third cylinder means, said third piston means being operatively connected to said actuator means;
delivery means for delivering fluid under pressure to said second chambers of said first and second cylinders and to said third cylinder means; and
control means for alternately delivering fluid through said delivery means to the second chamber of one of said cylinders to activate the piston means associated therewith and transfer fluid from the first chamber of said one cylinder to the first chamber of the other cylinder and then to the second chamber of the other of said cylinders to activate the piston means associated therewith and transfer fluid from the first chamber of said other cylinder to the first chamber of said one cylinder, said control means further alternately delivering fluid under pressure to opposite sides of said third piston means to cause said third piston means to operate said actuator means in synchronism with said first and second piston means.

4,065,231
MOTOR DRIVEN PUMP
David P. Litzenberg, 1523 Bryant Lane, Meadowbrook, Pa. 19046
Continuation-in-part of Ser. No. 541,491, Jan. 27, 1975, abandoned. This application Oct. 12, 1976, Ser. No. 731,303
Int. Cl.² F04B *17/00, 35/04*
U.S. Cl. 417—357 **5 Claims**

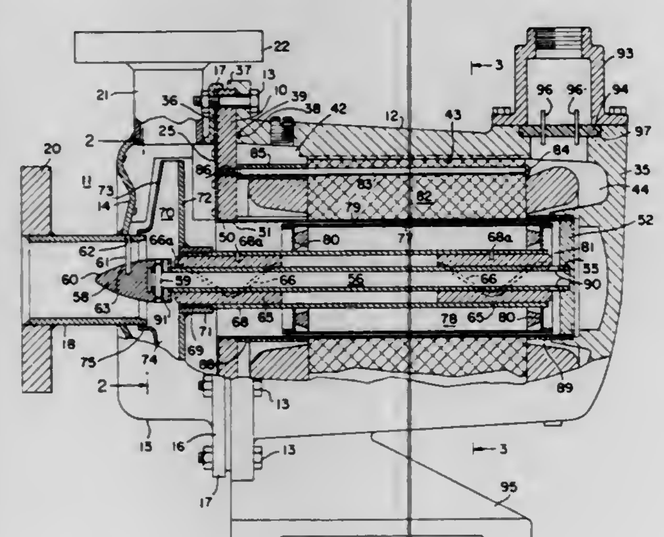

1. A motor driven pump comprising
a rigid post member,
an impeller housing carried by said post member on one side thereof and having a fluid inlet connection and a fluid delivery connection communicating with the interior thereof,
a motor housing carried by said post member on the other side thereof, and having a motor stator therein,
said post member having a motor stator isolating sleeve extending therefrom and into said motor housing interiorly of said motor stator,
said sleeve having an end closure remote from said post member,
a hollow mandrel carried at one end in said impeller housing and at the other end in said end closure,
a rotary impeller shaft journalled on said mandrel and movable axially thereon,
an impeller in said impeller housing secured to said shaft and a motor rotor in said motor housing and in spaced relation to said sleeve,
said motor rotor being in spaced relation to said sleeve to provide a fixed orifice with an inlet in communication with said impeller housing at the outlet of the impeller and with an outlet in communication with a pressure chamber between said motor rotor and said end closure,
said mandrel being in communication at one end with the inlet of said impeller and at the other end having port means communicating with said pressure chamber,
said motor rotor being longitudinally axially movable for varying the size of said port means and the discharge of fluid and control of pressure in said pressure chamber.

4,065,232
LIQUID PUMP SEALING SYSTEM
Andrew Stratienko, 8503 Elliston Drive, Philadelphia, Pa. 19118
Filed Apr. 8, 1975, Ser. No. 566,078
Int. Cl.² F04B *17/00*
U.S. Cl. 417—368 **7 Claims**

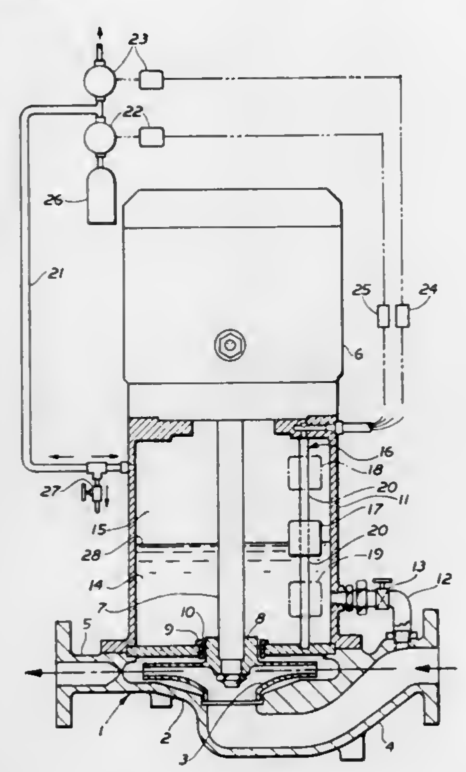

1. In the combination of a motor, a pump having a discharge and a suction, a rotatable shaft extending vertically downward from said motor, said shaft being operatively connected to said pump at a shaft entrance, a liquid pump sealing system comprising the elements:
a reservoir tank hermetically sealed to said pump around said shaft entrance and to the interior of said motor, said reservoir tank being partially filled with pumped liquid, said reservoir tank having a normal inherently stable liquid level range,
a volume of gas in said reservoir tank above said liquid level, said gas being at the order of and slightly in excess of the suction pressure at said pump, said gas being displaced within said reservoir tank solely responsive to a differential pressure between said reservoir tank and said suction
a bearing gap between said shaft and said pump at said shaft entrance, one side of said gap communicating with said discharge of said pump and the other side of said gap communicating with the interior of said reservoir tank, a suction return bleed line communicating from said reservoir tank to said pump suction, to provide a continuous flow of liquid from said pump discharge through said bearing gap into said reservoir and a continuous flow from said reservoir through said suction return bleed line to said pump suction, said flow being controlled responsive to pressures of said gas within said reservoir tank, said continuous flows inherently tending to equal each other, and to provide a normal inherently stable liquid level range in said reservoir tank above said suction return bleed line and below the top of said reservoir tank, said elements being the sole necessary means to maintain said liquid level inherently stable within said range during normal pump operation, said reservoir tank including means to sense said liquid level,
a pressurized gas source controllably communicating with said reservoir tank through a pressurizing valve,
a vent controllably communicating with said reservoir tank through a venting valve,
said liquid level sensor being operatively connected to said valves to open said pressurizing valve when said liquid level rises above said normal range, and to open said venting valve when said liquid level falls below said normal range, and to close both said valves when said liquid level is within said normal range.

4,065,233
ELECTRIC BLOWER ASSEMBLY HAVING VOLUTE PASSAGES TO DIRECT AIR INTO MOTOR HOUSING
Masao Torigoe, Amagasaki; Kunihito Mori, Toyonaka; Mitsuru Tsuchiya, Suita, and Seiji Takemura, Osaka, all of Japan, assignors to Matsushita Electric Industrial Co., Ltd., Kadoma, Japan
Filed July 14, 1975, Ser. No. 595,421
Claims priority, application Japan, July 16, 1974, 49-81835; July 16, 1974, 49-82834; Dec. 18, 1974, 49-145942; Dec. 18, 1974, 49-145976; Jan. 7, 1975, 50-4750; Feb. 26, 1975, 50-24433; Feb. 26, 1975, 50-145941
Int. Cl.² F04B *35/04, 39/06*
U.S. Cl. 417—368 **5 Claims**

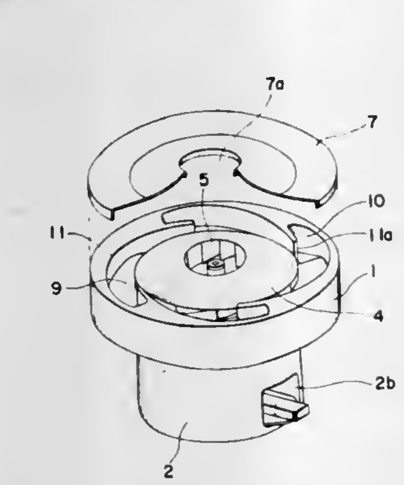

1. An electric blower assembly which comprises:
an electric motor having a drive shaft rotatable in one direction when said motor is energized;
at least one impeller mounted on said drive shaft for rotation together with said drive shaft;
an air guide structure comprising an air guide block having front and rear compartments formed therein, and a front cover adapted to close said front compartment with said impeller operatively accommodated in said front compartment, said front cover having a central bore formed therein in alignment with said drive shaft, said air guide structure being secured to said motor with said drive shaft rotatably extending into said front compartment through said rear compartment;
said front compartment including a circular chamber, in which said impeller is positioned, and a plurality of volute chambers substantially spirally, radially outwardly extending from and in communication with the periphery of said circular chamber;
said rear compartment opening towards said electric motor and having therein a plurality of exhaust chambers separate from each other and equal in number to the number of said volute chambers;
said motor having air inlet openings equal in number to the number of said exhaust chambers and communicating with said exhaust chambers for passage of air from said exhaust chambers into the body of said motor;
said air guide block further having passages equal in number to the number of said volute chambers, each of said volute chambers having one end terminating adjacent to and in communication with the corresponding one of said passages, said passages respectively communicating said volute chambers to the respective exhaust chambers in said rear compartment and inclined so that streams of air, which have entered the respective volute chambers after having been sucked into said front compartment through said central bore in said front cover and subsequently expelled from the outer periphery of said impeller, can smoothly flow into said exhaust chambers and, thereafter, into the body of said motor to cool the latter.

4,065,234
MAGNETICALLY DRIVEN ROTARY PUMPS
Honma Yoshiyuki, and Yamazaki Fumio, both of Tokyo, Japan, assignors to Nihon Kagaku Kizai Kabushiki Kaisha, Tokyo, Japan
Filed Dec. 22, 1975, Ser. No. 643,204
Int. Cl.² F04B *17/00*
U.S. Cl. 417—420 **7 Claims**

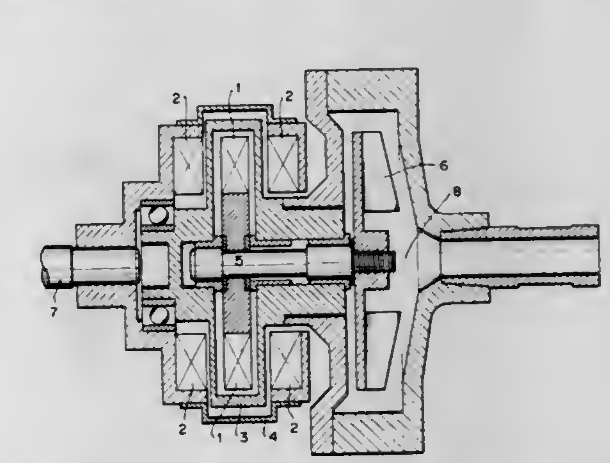

1. In a magnetically driven rotary pump driven from a power source comprising a casing, a rotary shaft rotatably mounted in said casing, a pump impeller mounted on said rotary shaft, a pump chamber means disposed about said pump impeller and in which said pump impeller operates, said pump chamber means being axially juxtaposed at one longitudinal end of said casing, at least one driven permanent magnet secured to said shaft, said driven magnet being in the form of a disc and being housed in said casing, driven means comprising at least two driving permanent magnets secured to a drive shaft which is driven by said power source, said driven means being rotatably mounted independently of the rotatable mounting of said rotary shaft, said drive shaft having its axis concentrically disposed relative to the axis of said rotary shaft and being axially juxtaposed at the side of said casing opposite to the side of the casing at which the pump housing means is axially juxtaposed, said at least two driving magnets being located outside of said casing with each driving magnet having a generally disc-like configuration having a central opening such that the latter encircles portions of said casing, said at least two driving magnets being axially spaced from one another and being located on opposite sides of said at least one driven magnet such that the latter is sandwiched between said at least two driving magnets, said at least two driving magnets being separated from said at least one driven magnet by said casing, said at least two driving magnets having outer peripheries which are connected by a joint plate disposed radially outwardly of said casing, whereby said at least one driven magnet is caused to be rotated by said at least two driving magnets by virtue of the magnetic attraction between said at least two driving magnets and said at least one driven magnet, said disposition of said at least two driving magnets on opposite sides of said at least one driven magnet resulting in substantially eliminating axial thrust of said rotary pump.

4,065,235
GEAR PUMP

Donn Breen Furlong, San Rafael, and Dickey Steele Londahl, Walnut Creek, both of Calif., assignors to Tuthill Pump Company, San Rafael, Calif.
Filed June 1, 1976, Ser. No. 691,904
Int. Cl.² F04B *17/00*
U.S. Cl. 417—420 **5 Claims**

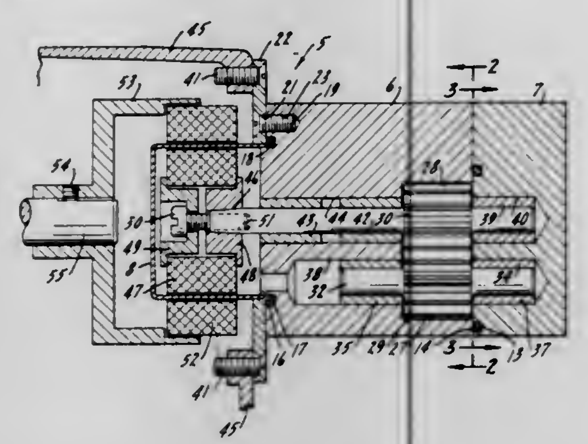

1. A magnetically driven gear pump isolated from its power source in a sealed housing comprising, a pair of gear cavities in said housing; a pair of essentially identical, circular toothed, hard metal mating gears, one of which is in each gear cavity; a rotatable axial shaft passing through the center of one of said gears; said shaft having a magnet on its end; power driven magnetic means external of said housing for turning said magnet and said one gear; the other gear being mounted on another shaft and the ends of each shaft extending beyond its gear, said shaft ends being received in sleeve bearings that are substantially softer than said gears and shaft ends; an inlet chamber and an outlet chamber in said housing on opposite sides of said gears; the pressure in said inlet chamber being lower than the pressure in said outlet chamber whereby said gears are biased toward said inlet chamber; a first tip seal hole in said housing below said inlet chamber and communicating with one of said gear cavities, and a second tip seal hole in said housing above said inlet chamber and communicating with the other of said gear cavities; a separate, removable stationary gear tip seal made from a non-metallic material substantially softer than said gears filling each tip seal hole and protruding slightly into said gear cavities, said tip seal being shaped like a truncated right circular cylinder which intersects one of said gear cavities, and the surface of said tip seal contacted by gear teeth being shaped like an arc of such circular gear cavity, said tip seal extending for a distance greater than the circumferential separation of the tips of the teeth of its associated gear, whereby at least one tooth of a gear will be biased against each tip seal so as to prevent leakage of liquid from said outlet chamber to said inlet chamber.

4,065,236
FUEL INJECTION PUMP FOR AN INTERNAL COMBUSTION ENGINE

Gerald Hofer, Weissach-Flacht; Gunter Bofinger, Vaihingen, Enz; Heinz Nothdurft; Mohammad-Ali Khosrawi, both of Stuttgart; Helmut Simon, Goppingen, and Karl Konrath, Ludwigsburg, all of Germany, assignors to Robert Bosch GmbH, Stuttgart, Germany
Filed Oct. 17, 1975, Ser. No. 623,383
Claims priority, application Germany, Oct. 17, 1974, 2449333
Int. Cl.² F04B *7/06;* F02M *59/34*
U.S. Cl. 417—493 **4 Claims**

1. In a fuel injection pump which includes:
A. a housing within which are formed a fuel chamber, a cylindrical bore and at least one connecting channel between said chamber and said bore;
B. a pump piston, disposed to move rotatably and axially within said cylindrical bore and defining with said housing a pressure chamber as part of the cylindrical bore, said pump piston being provided with longitudinal grooves at one end thereof, each opening into the pressure chamber and each being capable of establishing and interrupting communication between said chamber and said cylindrical bore; the improvement comprising:

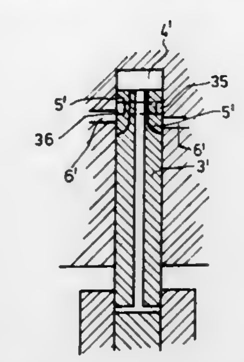

C. an annular fuel conduit formed in the pump piston to intersect each of the longitudinal grooves, said annular fuel conduit defining control edges extending transversely to the pump axis which control obturation of the annular fuel conduit during the axial excursion of the pump piston and after the onset of the pressure stroke of the piston.

4,065,237
VALVE APPARATUS FOR EXPANSIBLE CHAMBER

Walter J. Webb, Cincinnati, Ohio, assignor to The Scott & Fetzer Company, Lakewood, Ohio
Filed May 17, 1976, Ser. No. 687,098
Int. Cl.² F16K *15/16;* F04B *21/00*
U.S. Cl. 417—503 **25 Claims**

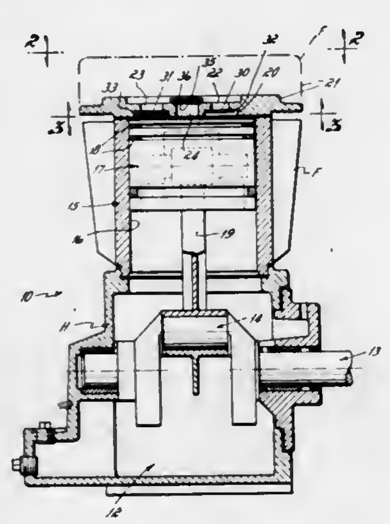

1. In an expansible compression chamber apparatus operatively connected to intake means and to exhaust means, and having an expansible chamber defined in part by a cylinder head, an improved intake valve apparatus connecting said chamber to a common pressure fluid source and comprising:
two laterally spaced intake ports in said head defining said intake means, said ports operatively connected to said expansible compression chamber and through which a fluid to be compressed is introduced into said chamber from said common pressure fluid source,
a first valve member disposed and biased to normally positively close one intake port, said first valve member opening said one port in response to a first intake pressure differential, and
a second valve member spaced from the first valve member and disposed and biased to normally positively close another of said intake ports, said second valve member opening said other port in response to a second intake pressure differential different from said first intake pressure differential.

4,065,238
APPARATUS FOR MANUFACTURING MOLDED ARTICLES FROM A KNEADABLE MATERIAL, E.G., CLAY

Hendrik Sinnema, Sneek, Netherlands, assignor to Machinefabriek W. Hubert & Co. B.V., Sneek, Netherlands
Division of Ser. No. 541,035, Jan. 14, 1975. This application Mar. 24, 1977, Ser. No. 780,947
Int. Cl.² B28B *13/02*
U.S. Cl. 425—94 **6 Claims**

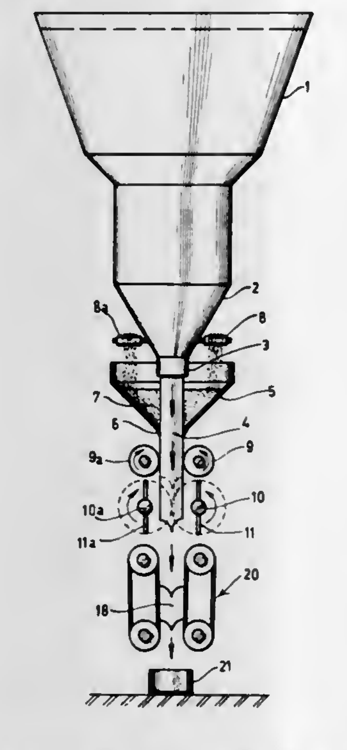

1. An apparatus for making molded articles comprising:
a. means for continuously producing a vertical strand of plastic material, the strand moving continuously along a vertical path,
b. means vertically beneath said strand-producing means for severing the strand at regular intervals to produce a succession of individual pieces of plastic material,
c. a mold vertically beneath said strand-severing means, and
d. means vertically beneath said strand-severing means and vertically above said mold for receiving each individual piece and for throwing each piece along the vertical path into said mold with sufficient kinetic energy that the piece plastically deforms and fills the mold.

4,065,239
JAM PREVENTION DEVICE FOR EXTRUSION PROCESS

Alex Sandor Gergely, Bon Air, Va., assignor to Philip Morris, Inc., Richmond, Va.
Continuation of Ser. No. 623,497, Oct. 17, 1975, abandoned. This application Feb. 9, 1977, Ser. No. 766,965
Int. Cl.² B29F *3/00*
U.S. Cl. 425—141 **5 Claims**

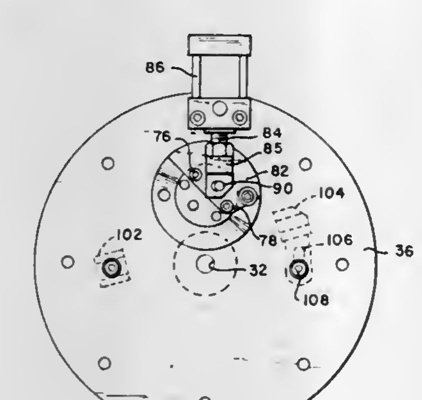

1. In an apparatus for forming a continuous thermoplastic workpiece including means for extruding a continuous workpiece of thermoplastic material as an extrudate of predetermined dimension, chamber means for receiving a liquid coolant therein, means for advancing the extrudate from said extruding means through a sizing aperture in said chamber means and through said chamber means, detection means for detecting any outsized variation dimension of the extrudate from a predetermined dimension beyond a certain allowable limit as the extrudate enters said sizing aperture, and means responsive to the detection by said sensing means of an outsized extrudate for moving rectilinearly a linking rod coupled thereto from a first to a second position, a cutter mechanism actuated upon movement of said linking rod from said first to said second position for severing the extrudate,
wherein the improvement comprises:
a cutter blade having an extended, curved cutting edge and being coupled to said rectilinearly movable linking rod for actuation thereby; and
said cutter blade being pivotally mounted to a fixed support at a point offset from its center to permit rapid rotation of said cutter blade across the path of the extrudate adjacent said aperture as said linking rod is moved rectilinearly from its first to its second position, thereby amplifying the effect of the rectilinear motion and effecting a rapid severing of the extrudate to prevent further extrudate from being drawn into said chamber means.

4,065,240
CARBON BLACK PELLETER WITH EVEN PIN DISTRIBUTION

Clinie E. Cole, Borger, Tex., assignor to Phillips Petroleum Company, Bartlesville, Okla.
Filed July 15, 1976, Ser. No. 705,482
Int. Cl.² B01J *2/10*
U.S. Cl. 425—222 **8 Claims**

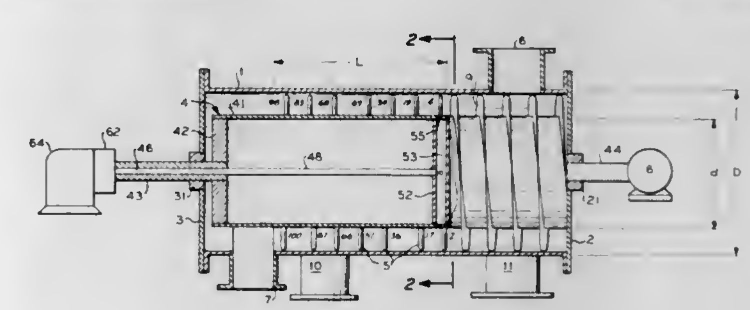

1. A carbon black pelleter comprising
a. a housing with a cylindrical internal surface,
b. a shaft coaxially and rotatably arranged within said housing; and
c. a plurality of pins evenly distributed on said shaft with the pin density being approximately the same for the entire length of the shaft, said pins extending essentially radially outwardly from said shaft into close proximity with the internal surface of the housing, and wherein said pins are arranged on the shaft so that the pitch of axially adjacent pins, defined by the formula

$$p = 360° / a \cdot t$$

wherein p is the pitch of axially adjacent pins, a is the azimuthal angular distance in degrees between axially adjacent pins along the shaft and t is the axial distance between these axially adjacent pins, changes at least one time.

4,065,241
MOLDING APPARATUS AND METHOD
Gerald J. Orlowski, Scottsdale, Ariz., assignor to Armour and Company, Phoenix, Ariz.
Filed July 14, 1976, Ser. No. 705,160
The portion of the term of this patent subsequent to Sept. 21, 1993, has been disclaimed.
Int. Cl.² A23P *1/00*
U.S. Cl. 425—228 3 Claims

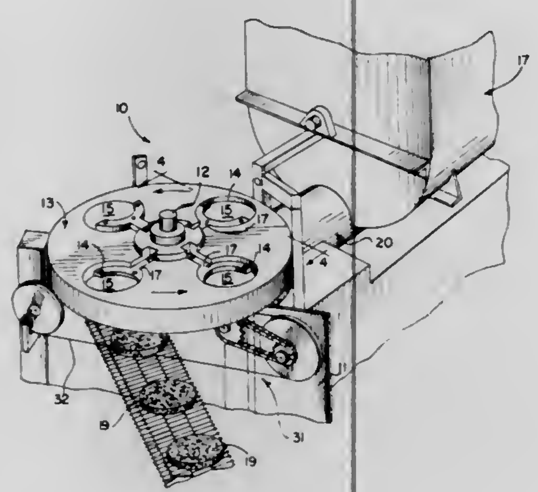

1. In an apparatus for forming a plurality of uniformly shaped patties from a mass of agglomerable edible material; said apparatus including:
a frame;
a drive means retained on said frame;
a hopper attached to said frame for receiving a mass of said edible material;
a turret rotatably mounted to said frame and drivingly connected to said drive means including a plurality of cavities located in spaced angular and radial relation therearound, each cavity having a barrier means mounted for reciprocal movement axially therein, each said barrier means having a bottom surface coating with each said cavity to form a mold;
housing means including auger means therein positioned between said hopper and said turret for moving said edible material through said hopper and substantially upwardly into said mold, filling it, and forming a patty therein as each mold opening is positioned in communication with said material moving means during a portion of each turret rotation;
means coacting with the turret for reciprocating said barrier means through said cavity as said turret rotates to push a patty substantially downwardly out therefrom at a portion of rotation substantially opposite the patty-forming portion; and
means connected to the frame for separating a patty from said barrier means in a manner preventing its deformation during separation;
the improvement wherein said patty separation means includes:
opposing spatially related pulley means mounted on said frame,
a continuous wire band mounted on and between said pulley means for movement in a loop therearound, and a portion of said band loop being positioned adjacent the bottom of said turret with said band crossing the surface of said barrier means at the lowest portion in the path of travel thereof.

4,065,242
DEVICE FOR FACILITATING THE BENDING AND FORMING OF PLASTIC PIPE OR OTHER STRUCTURES
John W. Dickey, Stanardsville, Va., and Larry F. Babb, Sandusky, Ohio, assignors to Emerson Electric Co., St. Louis, Mo.
Filed July 8, 1976, Ser. No. 703,527
Int. Cl.² B29C *17/06*
U.S. Cl. 425—384 11 Claims

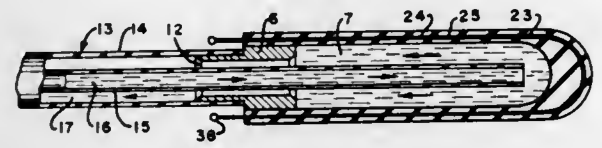

1. A device for facilitating the bending and forming of a structure having an internal wall defining an opening in said structure, which comprises:
a tubular elastomer boot having a first closed end and a second end, said elastomer boot defining a mandrel insertable in said structure for supporting the internal wall of said structure, said boot having a first diameter for insertion and a second diameter for supporting the internal wall of said structure, said elastomer boot including a support wall;
adapter closure means mounted to the open end of said boot, said adapter means forming a fluid seal for said boot along the open end of said boot, said adapter having an axial opening in it;
conduit means attached to said adapter, said conduit means including first and second passageways communicating with said tubular boot, said conduit means forming a fluid seal with said adapter means; and
means for heating said structure to bending temperature by heat transfer outwardly from said elastomer boot to said structure, said heater means comprising an electrically operable device associated with said support wall.

4,065,243
APPARATUS FOR FORMING A THICKENED BELL END ON THERMOPLASTIC PIPE
Petrus Marinus Acda, and Jacob Karreman, both of Enkhuizen, Netherlands, assignors to Polva Nederland B.V., Enkhuizen, Netherlands
Division of Ser. No. 607,770, Aug. 26, 1975, Pat. No. 4,006,757. This application Oct. 7, 1976, Ser. No. 730,362
Claims priority, application Netherlands, Feb. 28, 1975, 7502374
Int. Cl.² B29C *1/12*
U.S. Cl. 425—393 4 Claims

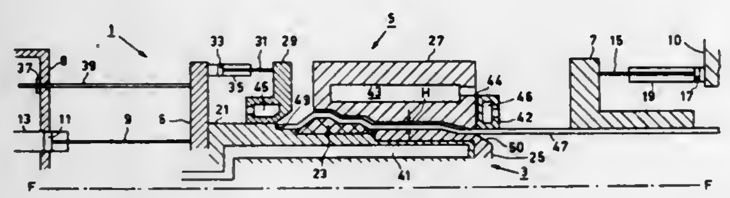

1. An apparatus for forming a bell end in a pipe of thermoplastic material, comprising a mandril which is symmetrical about an axis and has a metal core with a pipe clamp end and a bell end portion and an elastic shaping ring around said core between said end and end portion, a shaping sleeve, pipe clamp, and an upsetting member; means for mounting and positioning said mandril, shaping sleeve, pipe clamp and upsetting member coaxially with respect to one another and for relative axial movement, in an operating position the mandril and shaping sleeve being concentrically arranged and bounding an annular shaping space between outer diameters of the mandril and inner diameters of the shaping sleeve, said outer and inner respective diameters increasing along conical transition portions between cylindrical steps, from the pipe clamp end of the shaping mandril to a sealing chamber portion of the annular shaping space, and decreasing again to the bell end portion, the height of the shaping space increasing from the pipe clamp end of the shaping mandril to a surface in the sealing chamber and decreasing again.

4,065,244
APPARATUS FOR MOLDING POLYMERIC MATERIALS
Alan I W Frank, Pittsburgh, Pa., assignor to The Alan I W Frank Corporation, Exton, Pa.
Division of Ser. No. 539,483, Jan. 8, 1975, abandoned. This application June 10, 1976, Ser. No. 694,596
Int. Cl.² B29C *3/00*
U.S. Cl. 425—412 4 Claims

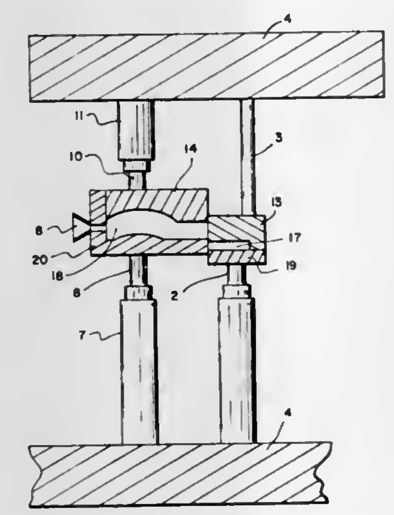

1. A molding apparatus comprising first and second mold cavities adapted for communication with each other to define a product to be molded, said first mold cavity formed by a pair of mold sections, at least one of said sections being movable with respect to said other section for increasing or decreasing the volume of said first mold cavity whereby decreasing said volume substantially defines that portion of the product to be molded in said first mold cavity, means for moving at least one of said sections operably connected thereto, and means for admitting material to be molded into said first mold cavity; said second mold cavity of fixed volume defining the remaining portion of the product to be molded and adapted for communication with said first mold cavity; and means for bringing said mold cavities into communication with each other to define the product to be molded.

4,065,245
APPARATUS FOR PRODUCING SHEETING HAVING A FIBROUS SURFACE
Hugo Brendel, Memmingen, and Heinz Federau, Amending, both of Germany, assignors to Metzeler Schaum GmbH, Memmingen, Germany
Division of Ser. No. 498,928, Aug. 20, 1974, Pat. No. 4,000,230. This application Sept. 14, 1976, Ser. No. 723,134
Claims priority, application Austria, Aug. 21, 1973, 7267/73; July 26, 1974, 6185/74
Int. Cl.² B29C *23/00*
U.S. Cl. 425—503 7 Claims

1. In an apparatus for manufacturing of a product comprising a carrier web and a fibrous surface formed from a nonfibrous polymer, which apparatus comprises means for supplying a polymer to a zone intermediate the carrier web and a heatable drawing surface, means for heating the polymer to render it molten, means for separating the carrier web and the drawing surface to provide a fiber-forming region in which fibers are formed from the molten polymer and adhere to the surface of the carrier web, and means for introducing a fluid into the fiber-forming region, the improvement comprising:
a. means for heating the molten polymer at a temperature of at least the melting point of the polymer;
b. means for separating the carrier web from the drawing surface to create a fiber forming region; and
c. at least one nozzle means positioned and arranged to:
1. introduce the fluid at a point contiguous to the carrier web and on the reverse side of said web directly opposite to the fiber forming region, whereby the fluid is

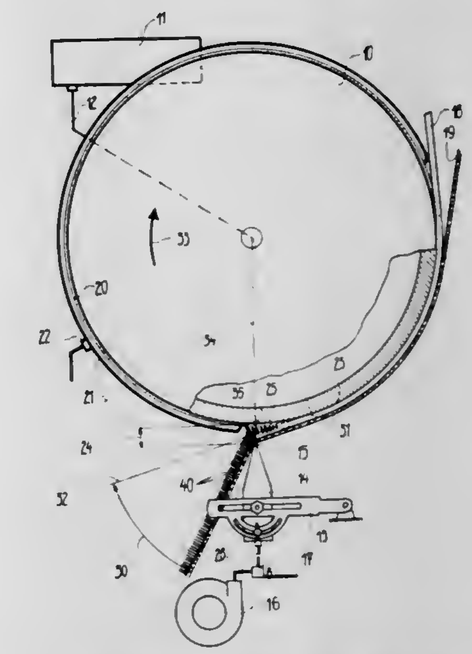

directed through the web into the fiber-forming region, and
2. deflect the carrier web having fibers formed thereon by an angle of 5°–90° in a direction away from the drawing surface and in the area in which the fluid is directed through the carrier web.

4,065,246
INJECTION BLOW MOLDING APPARATUS
Paul Marcus, 85 Pascack Road, Pearl River, N.Y. 10965
Continuation of Ser. No. 551,274, Feb. 20, 1975, abandoned, and a continuation-in-part of Ser. No. 558,819, March 16, 1975, Pat. No. 3,990,826, which is a continuation of Ser. No. 318,703, Dec. 27, 1973, abandoned, which is a division of Ser. No. 158,161, June 30, 1971, Pat. No. 3,776,991. This application July 20, 1976, Ser. No. 707,087
Int. Cl.² B29D *23/03*
U.S. Cl. 425—528 35 Claims

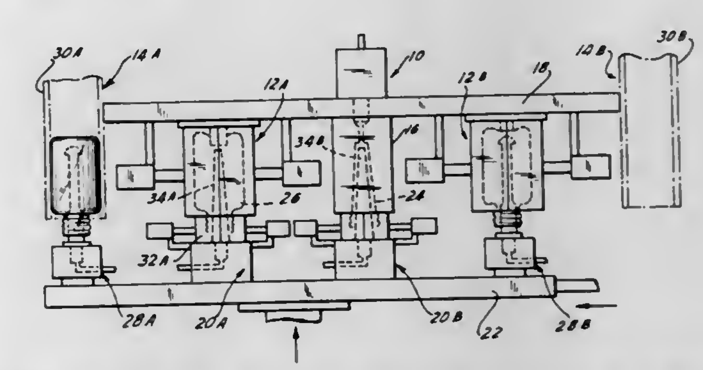

1. An ejection blow molding apparatus for making plastic receptacles comprising:
an injection station, including means at the injection station injection molding a parison of selected configuration;
an expansion and blowing station including means to position the parison and then to expand the parison to a predetermined length and then to blow mold the parison into a predetermined lateral and final configuration;
an ejection station with product removing means at the ejection station removing the finished product from the apparatus;
the injection station, expansion and blowing station, and ejection station being positioned in an adjacent linear side-by-side cooperating arrangement;
a linear transfer means being reciprocally movable toward

and away from the injection station, expansion, and blowing station, and ejection station and being reciprocally movable in a path perpendicular to the direction of reciprocal movement toward and away from the stations;

the linear transfer means being positioned with respect to the injection station, expansion and blowing station, and ejection station so that movement thereof away from the stations will permit the linear transfer means to remove a parison from the injection station along a first path and to simultaneously remove a finished product along a second path parallel to the first path and then along a third path perpendicular to the first and second paths to bring the parison into alignment with the expansion and blowing station and the finished product into alignment with the ejection station and then transfer the parison along a fourth path into the expansion and blowing station and simultaneously the finished product along a fifth path parallel to the fourth path to the ejection station.

4,065,247
APPARATUS FOR INCINERATING WASTE GASES
Noboru Okigami; Yoshitoshi Sekiguchi; Takusen Ito, and Kenji Onose, all of Osaka, Japan, assignors to Hitachi Shipbuilding and Engineering Co., Ltd., Osaka, Japan
Filed Nov. 19, 1976, Ser. No. 743,251
Claims priority, application Japan, Apr. 16, 1976, 51-48244[U]
Int. Cl.^{2} F23D *13/20*
U.S. Cl. 431—202 **9 Claims**

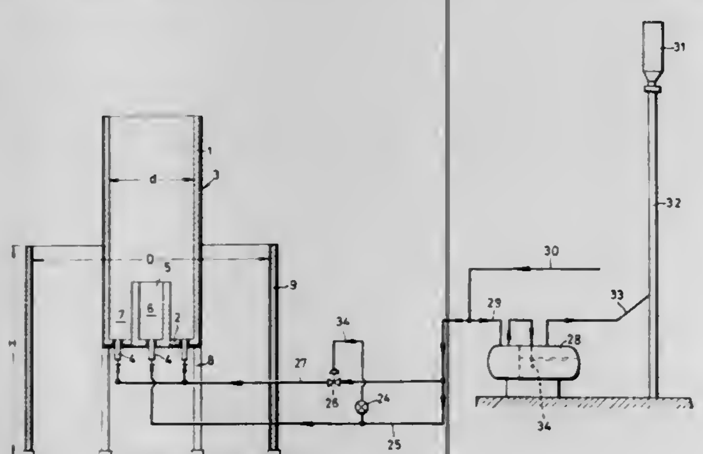

1. An apparatus for incinerating a waste gas comprising a combustion furnace main body having a peripheral wall and a hearth and a plurality of flare burners disposed on the hearth, each of the flare burners including a burner main body having a peripheral wall and a bottom wall, at least one of the walls of the burner main body being formed with air intakes, an inwardly projecting flange provided on an upper portion of the peripheral wall of the burner main body, gas-air mixture tubes downwardly extending through the flange and arranged at a given spacing, a waste gas main pipe disposed under the burner main body, waste gas branch pipes extending upward from the waste gas main pipe, and gas nozzles mounted on the upper ends of the waste gas branch pipes respectively and positioned at the lower ends of the gas-air mixture tubes.

4,065,248
GROUND FLARE
John F. Straitz, III, Meadowbrook, and Vicente A. Mendoza, Norristown, both of Pa., assignors to National Airoil Burner Co., Inc., Philadelphia, Pa.
Filed Jan. 8, 1976, Ser. No. 647,362
Int. Cl.^{2} F23D *13/24;* **F16L** *1/02*
U.S. Cl. 431—202 **2 Claims**

1. A flare for use on the ground comprising
wall members enclosing a space,
a waste gas supply main,
a plurality of horizontally disposed branch pipes extending from said waste gas supply main and within said space,
a plurality of nozzle supporting pipes extending upwardly from said branch pipes and having gas burner nozzles carried thereby,
each of said branch pipes having a predetermined number of gas burner nozzles connected thereto and supplied with waste gas therefrom for combustion,

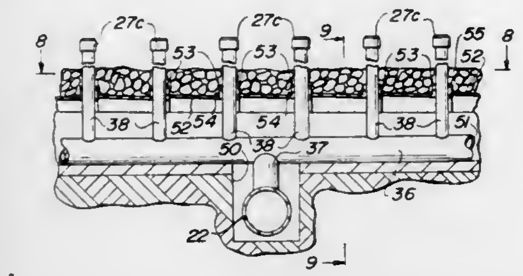

certain of said pipes being within preformed enclosures the top of which is covered by movable overlapped metal plates with notches through which said nozzle supporting pipes extend upwardly through said notches,
said branch pipes and said nozzle supporting pipes being expansible and contractible free from restraint by said plates.

4,065,249
HEATER FOR BILLETS
John W. Nelson, Wyoming, Mich., assignor to Oliver Machinery Company, Grand Rapids, Mich.
Division of Ser. No. 576,596, May 12, 1975, Pat. No. 3,994,678. This application July 19, 1976, Ser. No. 706,774
Int. Cl.^{2} F27B *9/00*
U.S. Cl. 432—8 **11 Claims**

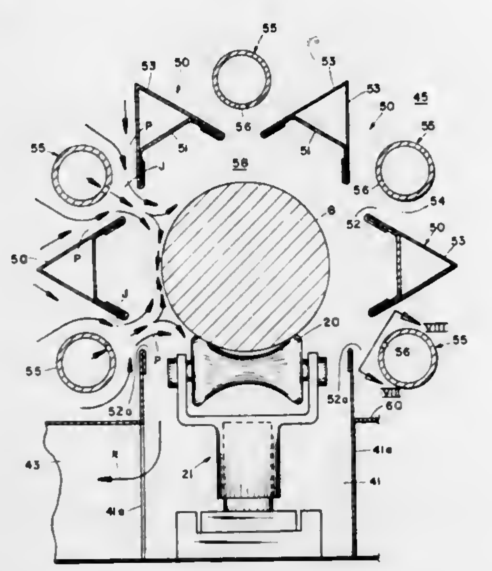

1. In a method of heating a length of material to an elevated temperature, the steps of providing a source of primary gas at a temperature at least that to which the material is to heated; providing a source of pressurized secondary gas at a temperature below that to which the material is to be heated; discharging said secondary gas through an opening against the material, the opening being of a type to create a high velocity jet-like stream; passing said jet-like stream first through a zone containing said primary gas and then through a restricted aspirating throat for entraining and accelerating quantities of said primary gas to heat the material by heat transfer to the material from a mixture of primary and secondary gases impinged upon the materials's surface.

4,065,250
METHOD OF INDEPENDENTLY ADJUSTING THE FUEL MIXTURE COMPOSITION AND MELTING RATE OF MULTIBURNER SHAFT FURNACES FOR MELTING METALS
Heinrich Schliefer, and Friedrich Wilhelm Warnecke, both of Hamburg, Germany, assignors to Norddeutsche Affinerie, Hamburg, Germany
Filed Apr. 20, 1976, Ser. No. 678,663
Claims priority, application Germany, Apr. 23, 1975, 2517957
Int. Cl.^{2} F27D *7/00*
U.S. Cl. 432—24 **11 Claims**

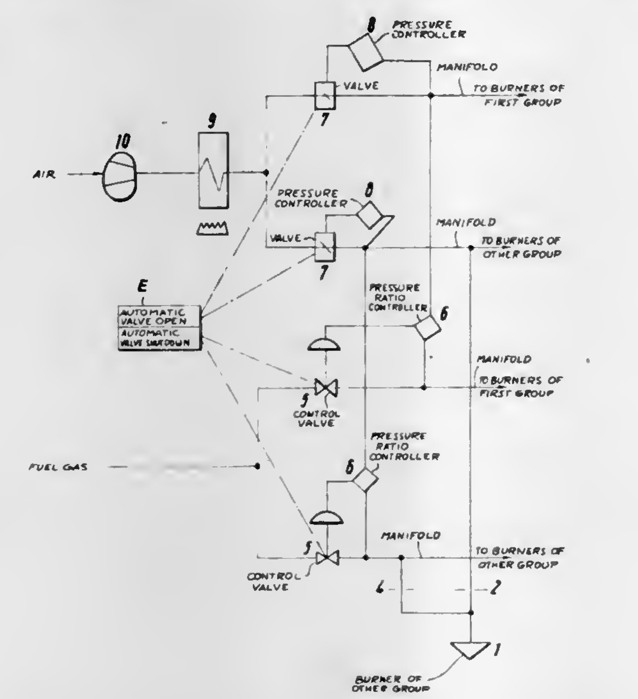

1. A method of independently adjusting a fuel-mixture composition and heating rate for a multiburner shaft furnace for melting metal wherein said shaft furnace comprises at least one more group of burners, respective first manifolds for feeding air to the burners of each of said groups, respective second manifolds for feeding a fuel gas to the burners of each of said groups, and respective control valves in each of said manifolds, said method comprising the steps of:
controlling the heating rate by sensing the pressure in one of the manifolds of each of said groups of burners and operating the valve of the said one of said manifolds of each group in dependence upon the sensed pressure; and
detecting the pressure ratio between the first and second manifolds of each of said groups of burners and controlling the valve of the other manifold of the first and second manifolds of each of said groups of burners in dependence upon the detected pressure ratio with a single pressure-ratio controller, thereby adjusting the fuel-mixture compositions for the burners of said groups.

4,065,251
FURNACES
Edward Francis Beverley Croft, Aldridge, and John J. Lane, Weston-super-Mare, both of England, assignors to Associated Electrical Industries Limited, London, England
Filed Aug. 3, 1976, Ser. No. 711,236
Int. Cl.^{2} F27B *9/28*
U.S. Cl. 432—59 **16 Claims**

1. A furnace for the heat treatment of metal strip comprising a furnace chamber with heating means
having an internal wall structure defining a flow path for gas recirculating internally within the chamber, a strip support surface extending lengthwise through the furnace chamber, a plurality of injectors in communication with a source of gas under pressure located externally of said chamber and operably connected with the furnace to place the interior of the furnace chamber under pressure to promote internal recirculation of gas within the furnace chamber and means for directing recirculating gas over the strip support surface to provide a gaseous cushion

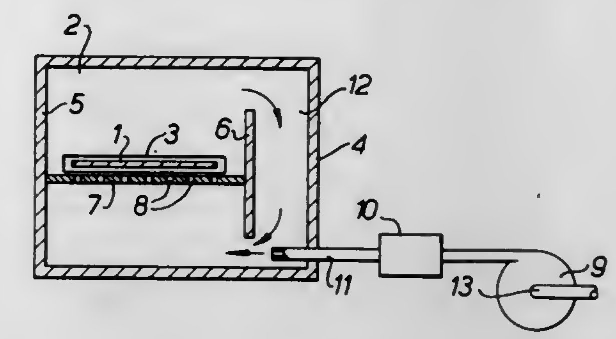

between said surface and metal strip travelling through the furnace.

4,065,252
SPRAY MIST COOLING ARRANGEMENT
Klaus H. Hemsath, Sylvania, Ohio, and Frank J. Vereecke, Palmyra, Mich., assignors to Midland-Ross Corporation, Cleveland, Ohio
Division of Ser. No. 480,920, June 19, 1974, Pat. No. 3,997,376. This application May 3, 1976, Ser. No. 682,204
Int. Cl.^{2} F27D *15/02;* **B08B** *3/00*
U.S. Cl. 432—77 **6 Claims**

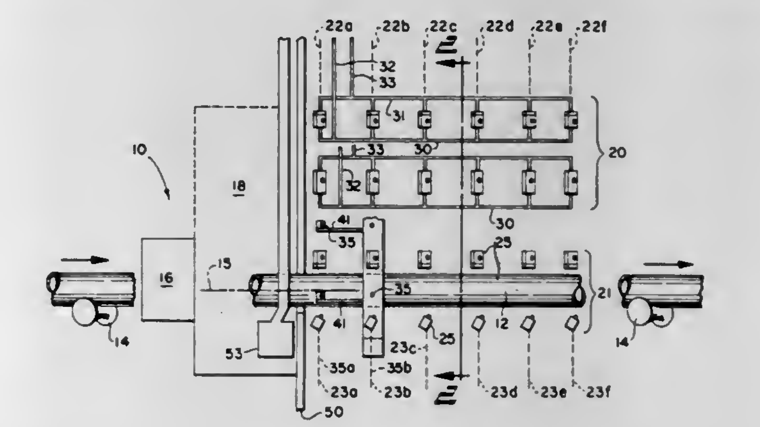

1. Apparatus for cooling a workpiece continuously moving from a heat source into and through said apparatus, said apparatus comprising:
a framework downstream from said heat source;
a plurality of spray mist units incrementally spaced along a longitudinal axis generally parallel to the longitudinal axis of said workpiece and carried by said framework;
each mist unit including a plurality of atomizing spray nozzles spaced in generally equal increments about an imaginary boundary surrounding said workpiece at equal distances therefrom;
each nozzle being orientated within each unit to develop overlapping sprays between one another and the nozzles' spray patterns being of the type of develop overlapping sprays between adjacent mist units;
means operable to supply water and air under sufficient pressures to said nozzles
a. to produce a spray mist of atomizing water particles of size sufficient to float in air;
b. to cause turbulent flow of spray mist by said overlapping patterns prior to contacting said article and expand said mist sprays into an envelop completely surrounding that portion of the workpiece between said mist units; and
c. to evaporate said water mist particles into a water vapor before actual contact of said spray mist with the surface of said workpiece.

4,065,253
LAUNDRY DRYER
Norman J. Bullock, Prospect, Ky., assignor to W. M. Cissell Manufacturing Company, Louisville, Ky.
Filed Aug. 20, 1976, Ser. No. 716,185
Int. Cl.² F27B *7/36*
U.S. Cl. 432—105 **5 Claims**

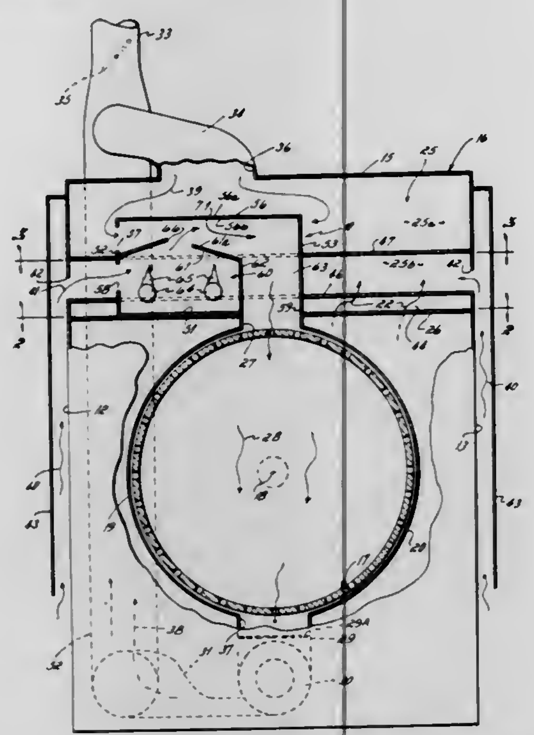

1. A laundry dryer having a hot air compartment structure that heats recirculated exhaust air and fresh make-up air, said hot air compartment structure comprising

a heat transfer chamber positioned within an attic chamber for said laundry dryer, said heat transfer chamber including a heat source provided to heat fresh make-up air to an elevated temperature level, said heat transfer chamber also including a roof having an exhaust port therein, the make-up air heated in said heat transfer chamber exhausting from said port in that chamber's roof,

make-up air duct structure connected with an inlet port to said heat transfer chamber, said make-up air duct structure directing only fresh make-up air from the atomsphere into said heat transfer chamber,

a sub-floor in said attic chamber, said sub-floor being connected with said heat transfer chamber and said attic chamber to form a recirculated air portion of said attic chamber,

a heat transfer air duct located above said heat transfer chamber, said heat transfer air duct including an inlet port that communicates with said attic chamber's recirculated air portion, said heat transfer chamber's roof defining a first wall portion thereof, a second wall portion thereof being located within said attic chamber's recirculated air portion and said second wall portion of said heat transfer air duct being positioned above and spaced from said first wall portion of said heat transfer air duct, heated make-up air being exhausted from said heat transfer chamber into said heat transfer air duct through said exhaust port in said heat transfer chamber's roof,

a recirculated exhaust air duct connected with said attic chamber's recirculated air portion, recirculated exhaust air from said recirculated exhaust air duct being introduced into said attic chamber's recirculated air portion contacting said heat transfer air duct's second wall portion prior to that recirculated air passing into said heat transfer air duct through said heat transfer air duct's inlet port, and

a single feed duct connected at one end with said heat transfer air duct, said feed duct connected at the other end with a shroud for said dryer's drum, said feed duct receiving the recirculated air flow and the make-up air flow after each has been heated, and said air flows being admixed in said feed duct prior to introduction into the dryer's drum.

4,065,254
PROCESS FOR DYEING AND PRINTING
Arthur Bühler, Rheinfelden; Alfred Fasciati, Bottmingen, and Karl Schlumpf, Basel, all of Switzerland, assignors to Ciba-Geigy Corporation, Ardsley, N.Y.
Continuation of Ser. No. 373,216, June 25, 1973, abandoned. This application May 19, 1976, Ser. No. 687,809
Claims priority, application Germany, June 26, 1972, 2231245
Int. Cl.² D06P *1/38;* **C09B** *27/00;* **D06P** *3/12*
U.S. Cl. 8—1 C **8 Claims**

1. A process for dyeing and printing leather, cotton or wool material, comprising the step of applying to leather, cotton or wool material a diazonium salt and a coupling component which react on the material to produce a diazo dyestuff, wherein the coupling component is selected from the group consisting of:

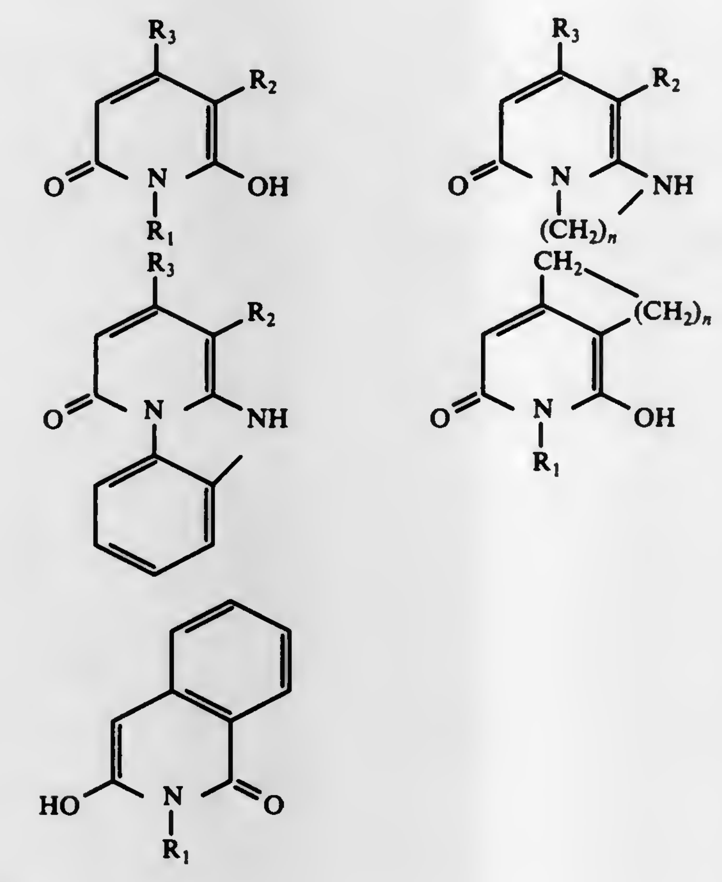

wherein

R_1 is hydrogen, an alkyl group, an acylaminoalkyl group, an aralkyl group, an aryl radical, a heterocyclic radical, an alkylene radical which links the radical of the elected formula with a further similar heterocyclic radical, or an amino group;

R_2 is hydrogen, an alkyl group, cyclohexyl, cyano nitro, nitroso, H_2N—, acylamino group, an alkylcarbonyl or arylcarbonyl group, a sulphonyl group, an aminosulphonyl group, an alkoxycarbonyl or aryloxycarbonyl radical, an aminocarbonyl group, a halogen atom, a sulphoalkyl group, a haloalkanoylaminomethyl group, a quaternary ammoniumalkanoylaminomethyl group, a sulfoalkanoylaminomethyl group, a phthalimidomethyl group, an o-benzene disulfonimidomethyl group, a sulfonic acid group, a carboxyl group, a quaternized amino group, a pyridinium group or a benzimidazolium group;

R_3 is hydrogen, an alkyl group, an aralkyl radical, an aryl radical, a heterocyclic radical, the cyano group, an alkoxycarbonyl or aryloxycarbonyl radical, an aminocarbonyl group, an alkoxycarbonylmethyl or aryloxycarbonylmethyl radical, the cyanomethyl group, an acylmethyl group, an aminocarbonylmethyl group, the carboxy group or the hydroxymethyl group;

n is 2 or 3;

wherein one of R_1 and R_2 is a fiber-reactive group provided that every selected coupling component has one fiber-reactive group.

4,065,255
2-METHYL-5-N-HYDROXYALKYLAMINOPHENOL IN AN OXIDATION DYE COMPOSITION AND METHOD OF USING THE SAME
Patrick Andrillon, Aulnay-sous-Bois, and Andree Bugaut, Boulogne-Billancourt, both of France, assignors to L'Oreal, Paris, France
Filed June 23, 1976, Ser. No. 699,169
Claims priority, application France, June 26, 1975, 75.20154
Int. Cl.² A61K *7/13*
U.S. Cl. 8—10.2 **21 Claims**

1. A dye composition for keratinic fibers containing an aqueous or hydroalcoholic carrier, at least one coupler of the formula

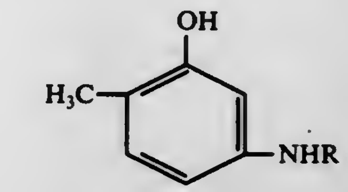

(I)

wherein R represents hydroxyalkyl having 1–4 carbon atoms and at least one oxidation base selected from the group consisting of a paraphenylene diamine, an orthophenylene diamine, a paraamino phenol, an ortho amino phenol and a heterocyclic oxidation base, said coupler being present in an amount of 0.01 to 2.5 weight percent and said oxidation base being present in an amount of 0.01 to 3.5 weight percent, based on the total weight of said composition.

4,065,256
METHOD FOR GRAFT POLYMERIZATION OF SHAPED ARTICLE OF HYDROPHOBIC SYNTHETIC POLYMER
Kikuji Igeta, and Masakatsu Ohguchi, both of Shiga, Japan, assignors to Toyo Boseki Kabushiki Kaisha, Osaka, Japan
Filed Feb. 2, 1976, Ser. No. 654,714
Claims priority, application Japan, Jan. 31, 1975, 50-13506
Int. Cl.² D06M *13/00, 13/20*
U.S. Cl. 8—115.5 **23 Claims**

1. A method for the graft polymerization of a shaped article of hydrophobic synthetic polymer, which comprises treating the shaped article with an aqueous emulsified dispersion containing water, an emulsifier, a hydrophobic radical polymerization initiator, an organic solvent which is liquid at normal room temperature, naphthalene and at least one unsaturated monomer containing in the molecular unit thereof at least one double bond capable of radical polymerization, the amount of naphthalene in the dispersion being from 1 to 80% by weight, based on the weight of the organic solvent,

with the proviso that when the unsaturated monomer contains an acidic group, the emulsifier is (1) a mixture of a nonionic surface active agent and an anionic surface active agent or (2) a nonionic-anionic surface active agent.

4,065,257
INHIBITION OF DYE STAINING DURING LAUNDERING OF TEXTILE MATERIALS
Gervase Coe, Stockport, and Frank Lee, Dukinfield, both of England, assignors to Ciba-Geigy Corporation, Ardsley, N.Y.
Continuation of Ser. No. 334,814, Feb. 22, 1973, abandoned. This application July 18, 1975, Ser. No. 597,861
Int. Cl.² D06P *5/06*
U.S. Cl. 8—74 **17 Claims**

1. A method for inhibiting the dye-staining of textiles during washing comprising contacting the textile articles during the washing process with (a) a reaction product of at least three molecular proportions of an α,β-alkylene oxide with one molecular proportion of an organic compound which contains at least one basic primary or secondary amino group or a basic tertiary amino group as well as an alcoholic hydroxyl group or is an acid salt or a quaternary ammonium salt of such a reaction product, and (b) of a reaction product of an aliphatic tertiary

polyamide with an aliphatic dihalide or (b) of a reaction product of an aliphatic tertiary polyamine with an aliphatic dihalide. Wherein the proportions of (a) and (b) are each 0.25 grams per liter to 2 grams per liter of the wash water.

4,065,258
PROCESS FOR DRY CLEANING LEATHER
Haywood Gordon France, South Charleston, W. Va., assignor to Union Carbide Corporation, New York, N.Y.
Filed Mar. 5, 1976, Ser. No. 664,247
Int. Cl.² C14C *9/00*
U.S. Cl. 8—142 **4 Claims**

1. In the process of dry cleaning leather, the improvement which comprises having present in the dry cleaning solvent an epoxy-containing silicone compound of the formula:

$$R_3SiO-\left[\begin{array}{c}R\\|\\SiO\\|\\R\end{array}\right]_x-\left[\begin{array}{c}R''\\|\\SiO\\|\\R'\end{array}\right]_y-SiR_3$$

wherein R is an alkyl radical containing from 1 to 4 carbon atoms, R" is an alkyl radical containing from 1 to 40 carbon atoms, R' is an organic radical containing a vicinal epoxy group, x has a value of from 10 to 1,000 and y has a value of from 1 to 100.

4,065,259
FLUOROCARBON DYE DISPERSION FOR EXHAUST DISPERSE DYEING
Harold Leonard Jackson, Hockessin, Del., assignor to E. I. Du Pont de Nemours and Company, Wilmington, Del.
Continuation-in-part of Ser. No. 466,844, May 3, 1974, abandoned, which is a continuation-in-part of Ser. No. 322,126, Jan. 9, 1973, abandoned. This application Apr. 23, 1976, Ser. No. 679,905
Int. Cl.² D06P *5/00, 1/64;* **C09B** *67/00*
U.S. Cl. 8—166 **13 Claims**

1. Dye dispersion comprising:
a. an organic disperse dye; and
b. a normally liquid fluorocarbon having a fluorine to carbon atom ratio of at least 1.5, a solubility parameter of not greater than 7.0, a boiling point of at least 20°-25° C at atmospheric pressure, a critical temperature of at least 135° C. and being selected from the group consisting of
1. perfluoro(2,3-dimethylbutane), perfluorokerosene and its constituents boiling above 100° C or $(CF_3)_2CF(CF_2CF_2)_{2\text{-}4}CF(CF_3)_2$,
2. perfluorocycloaliphatic hydrocarbons,
3. chlorofluoroalkanes,
4. hydrofluoroalkanes,
5. hydrochlorofluoroalkanes,
6. perfluoroalkyl ethers,
7. hexafluoropropylene oxide polymers having a degree of polymerization of 1–50,
8. perfluoro(tri-$C_{1\text{-}12}$alkylamines) and
9. unsaturated fluorocarbons having 3–4 perfluoroalkyl groups of 1–10 carbon atoms attached to the

$$>C=C<$$

moiety,
each of said groups (1)–(6)having no more than 18 carbon atoms.

4,065,260
HALOGEN DERIVATIVES OF ALKYNOXYMETHYL AMINES AS CORROSION INHIBITORS
Patrick M. Quinlan, Webster Groves, Mo., assignor to Petrolite Corporation, St. Louis, Mo.
Division of Ser. No. 556,332, March 7, 1975, Pat. No. 4,026,946. This application Jan. 3, 1977, Ser. No. 756,168
Int. Cl.² C23F *9/00, 9/02, 11/10;* **C23G** *1/02*
U.S. Cl. 21—2.7 R **8 Claims**

1. A process of inhibiting metal corrosion which comprises treating an acid system with a composition which is a halogen substituted alkynoxymethyl amine.

4,065,261
DEVICE FOR EMITTING VOLATILE SUBSTANCE
Rokuro Fukada, Ohtsu, Japan, assignor to Eikosha Co., Ltd., Kyoto, Japan
Filed June 10, 1976, Ser. No. 694,559
Int. Cl.² A61L *9/01, 9/04*
U.S. Cl. 21—74 R **7 Claims**

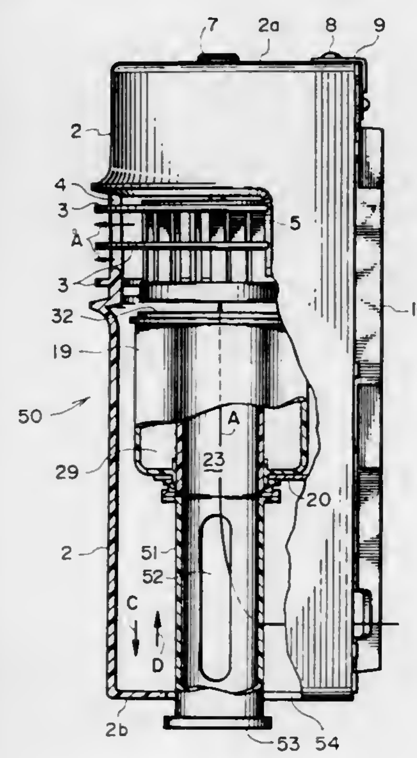

1. A device for emitting volatile substance which comprises:
a casing having a plurality of openings through which air can pass;
a motor on said casing;
a fan connected to the motor for forcing air through said openings;
a container mounted on the casing and having a pair of open ends;
a tubular adjusting member slidably mounted in one of the open ends of the container, the tubular adjusting member having an open end positioned within the container and an axially extending passage through which air can pass;
and a volatile substance within the container and outwardly of the tubular adjusting member, the adjusting member being slidable axially within said one open end of the container to vary the spacing of said open end of the adjusting member from the other open end of the container whereby the amount of volatile substance exposed to air flowing from said open end of the adjusting member can be varied.

4,065,262
FILTER AND AIR FRESHENER APPARATUS
Mitchell Petroff, 2038 Isabell, Troy, Mich. 48084
Filed Nov. 2, 1976, Ser. No. 738,051
Int. Cl.² A61L *9/01;* **B01D** *50/00*
U.S. Cl. 21—74 R **3 Claims**

1. Air filter apparatus and air freshener for filtering air and delivering an air freshener composition to a domestic air supply comprising air filter element means for filtering air, a plurality of sealed air freshener container means positioned for holding an air freshener composition in said air filter element, each of said container means having an effluent opening and an influent opening intersected by a central axis, said central axis lying in the direction of air flow through said air filter, said air freshener container means having individual closure means thereon positioned over both and removable from at least one of said influent openings and said effluent openings for sealing said container means, said closure means being individually removable from said container means to allow air to contact

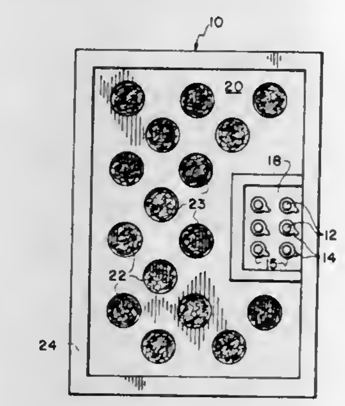

said air freshener, said container means being mounted on a panel lying in a plane parallel to the plane of said air filter element means, said container means projecting through said air filter element means, said axis of said container means being transverse to said panel and substantially parallel to the line of air flow through said air filter element means, whereby the removal of said closure means individually from said container means and from any combination of said container means controls the quantity of delivery of said composition to a domestic air supply system passing through said filter element and contacting said container means having said closure means removed therefrom.

4,065,263
ANALYTICAL TEST STRIP APPARATUS
Richard G. Woodbridge, III, 40 North Road, Princeton, N.J. 08540
Continuation-in-part of Ser. No. 672,916, April 2, 1976, Pat. No. 4,007,010, and a continuation-in-part of Ser. No. 485,548, July 3, 1974, abandoned. This application June 14, 1976, Ser. No. 696,231
The portion of the term of this patent subsequent to Feb. 8, 1994, has been disclaimed.
Int. Cl.² G01N *27/00, 31/00, 33/00*
U.S. Cl. 23—253 TP **19 Claims**

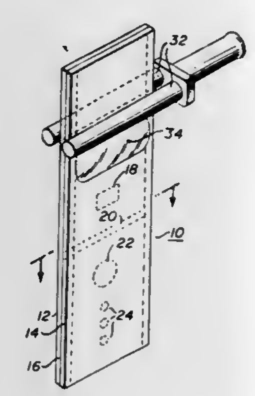

1. An analytical test strip apparatus comprising:
at least one substantially flat strip having a front layer and a back layer, said front and back layers defining a channel therebetween through which a sample of liquid may pass, said strip also including a sample input port and a terminating end, at least one of said layers being relatively pliable;
a plurality of process station means linearly located in said channel; and,
a thin layer of an inert liquid medium located in said channel, said liquid medium adhering said two layers to each other and being strong enough to prevent the forward movement of said sample in said channel solely under the influence of gravity but weak enough to allow said sample to linearly pass in a predetermined sequence through said plurality of station means in said channel under the influence of an exterior propelling means, said liquid medium so filling said channel as to constitute the medium through which the sample is propelled, the dimensions of said liquid medium being sufficiently broad so as to substantially exclude contaminating air from said station means.

4,065,264
BLOOD OXYGENATOR WITH INTEGRAL HEAT EXCHANGER FOR REGULATING THE TEMPERATURE OF BLOOD IN AN EXTRACORPOREAL CIRCUIT
John Edward Lewin, Santa Ana, Calif., assignor to Shiley Laboratories, Inc., Santa Ana, Calif.
Filed May 10, 1976, Ser. No. 685,020
Int. Cl.² A61M *1/03;* **F28F** *1/16, 1/36;* **F28D** *7/02*
U.S. Cl. 23—258.5 BH **21 Claims**

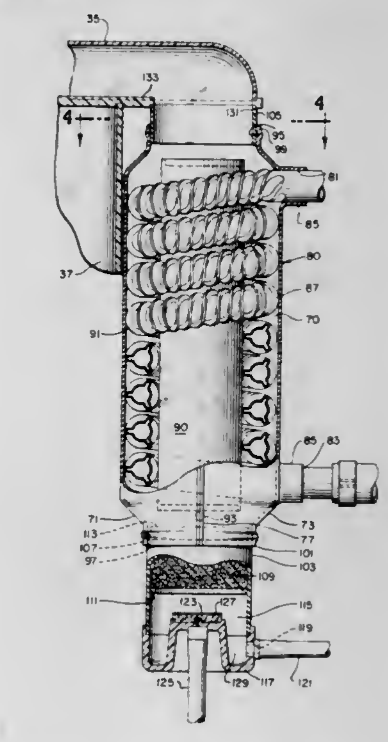

1. A blood oxygenator having an integral heat exchanger for regulating the temperature of the blood flowing in an extracorporeal blood circuit comprising:
an oxygenating chamber;
first means for introducing blood and bubbles of oxygen into said oxygenating chamber for forming blood foam within said chamber;
second means for both (a) contributing to the transfer of oxygen into the blood and removing carbon dioxide from the blood and (b) regulating the temperature of said blood comprising a heat transfer means having a substantially continuous helical rib along its length providing a continuous helical flute passage considerably longer than the length of said heat transfer means, said helical rib being located in contact with or closely proximate to wall means of said blood oxygenator so that substantially all of said blood and blood foam produced by said first means flows in contact with external surfaces of said heat transfer means through a plurality of restricted area, extended length flow paths around the exterior of the heat transfer means provided by said helical flute passage in combination with said wall means prior to any substantial defoaming of the blood foam with a resulting relatively long residence time of the blood and blood foam in contact with said heat transfer means; and
third means coupled to said heat transfer means for supply-

ing or removing heat energy from said heat transfer means.

4,065,265

APPARATUS FOR PRODUCING CARBON BLACK

Gary A. Chesnutt, Portland, Tex., assignor to Ashland Oil, Inc., Ashland, Ky.

Filed June 11, 1976, Ser. No. 695,008

Int. Cl.[2] C09C *1/48;* F23C *5/06*

U.S. Cl. 23—259.5 5 Claims

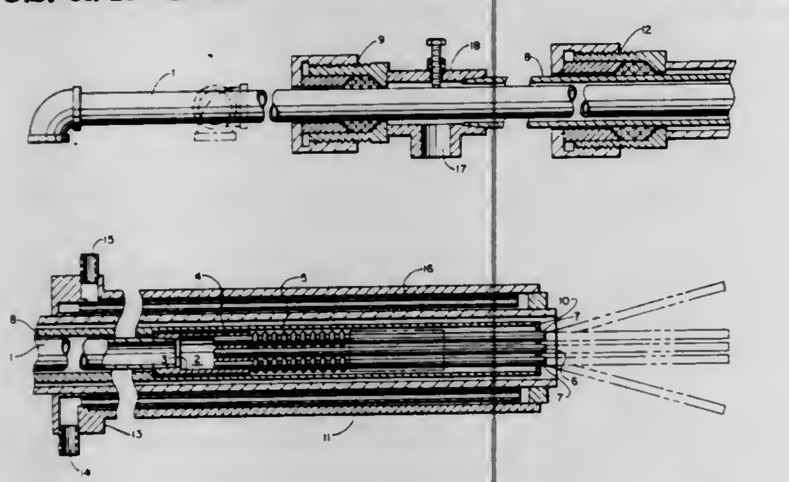

1. An injection assembly for introducing a normally liquid hydrocarbon feedstock into a carbon black producing furnace, which comprises:
- a pipe shroud member having an upstream and downstream closure end;
- a feedstock supply pipe concentrically disposed within said shroud member adapted to be rotatably and longitudinally positioned therein and whose upstream end projects beyond the upstream closure end of the shroud member;
- a cylindrical manifold rigidly attached to and in open communication with the downstream end of said feedstock supply pipe and the header end of which is provided with a centrally located circular port and a plurality of like ports circumferentially disposed thereabout;
- a metallic feedstock supply tube rigidly connected to and in axial alignment with said centrally located circular port and projecting beyond the shroud member downstream closure end;
- a metallic feedstock supply tube rigidly connected to and in axial alignment with each of said circumferentially disposed ports via a segment of metallic flex tube the combined length thereof being about that of said centrally disposed feedstock supply tube; and
- a spreader plate forming the downstream rigidly affixed closure end of the shroud member and which is perforated and positioned to accommodate freely the longitudinal passage of said feedstock tubes.

4,065,266

APPARATUS FOR MANUFACTURING PHOSPHORIC ACID

Harold B. Caldwell, Sarasota, Fla., assignor to Whiting Corporation, Harvey, Ill.

Continuation of Ser. No. 250,601, May 5, 1972, Pat. No. 3,939,248, which is a continuation of Ser. No. 779,823, Nov. 29, 1968, abandoned, which is a division of Ser. No. 632,101, April 19, 1967, Pat. No. 3,416,889, which is a continuation-in-part of Ser. No. 377,012, June 22, 1964, abandoned. This application Feb. 17, 1976, Ser. No. 658,753

The portion of the term of this patent subsequent to Dec. 17, 1985, has been disclaimed.

Int. Cl.[2] B01J *8/00;* C01F *11/46;* C01B *25/22*

U.S. Cl. 23—259.2 6 Claims

1. Apparatus for reacting phosphate rock and sulfuric acid in the wet process of making phosphoric acid which comprises: a reactor-cooler unit adapted to be operated with a freeboard space; a vacuum source in communication with said freeboard space; a pre-mixer in which phosphate rock is combined with a liquid to form a slurry prior to being introduced into said reactor-cooler unit, slurry conduit means connecting said premixer with said reactor-cooler unit; and, means for introducing sulfuric acid into said reactor-cooler unit; said reactor-cooler unit comprising an enclosed vessel, flow directing means within said enclosed vessel, forced circulation means operatively associated with said flow directing means for circulating

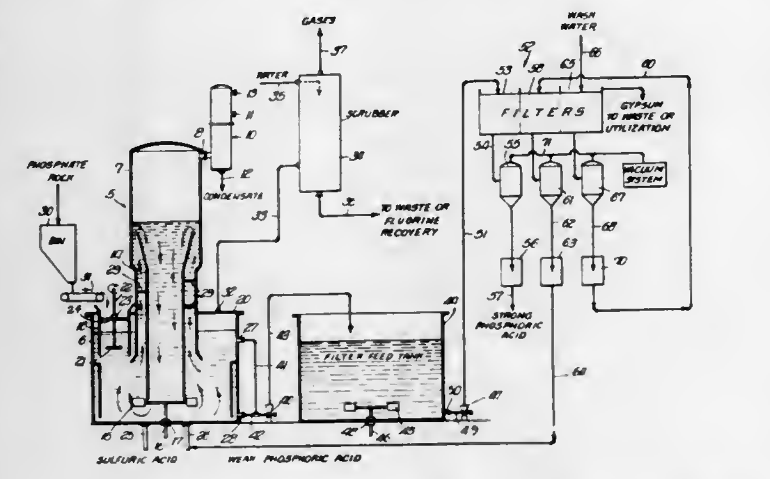

a body of reaction slurry contained in said reactor-cooler unit in a flow pattern adapted to expose substantially the entire body of said reaction slurry to a subatmospheric pressure maintained in said freeboard space at a rate sufficient to provide substantially uniform conditions of temperature and concentration throughout said body of reaction slurry, and outlet means in said vessel for withdrawing reaction slurry from said reactor-cooler unit.

4,065,267

MANUFACTURE OF ALKYLATED UREA OR MELAMINE FORMALDEHYDE WITH IN-PROCESS ALCOHOL RECOVERY

Lawrence Ladage, Muskego, Wis., and Hilary E. Holste, Lower Burrell, Pa., assignors to PPG Industries, Inc., Pittsburgh, Pa.

Division of Ser. No. 541,744, Jan. 17, 1975. This application Sept. 13, 1976, Ser. No. 722,979

Int. Cl.[2] B01D *3/00*

U.S. Cl. 23—263 3 Claims

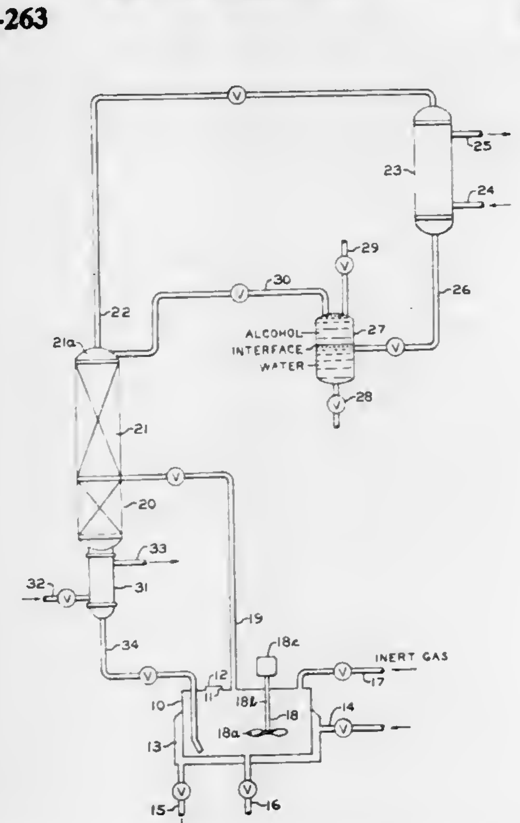

1. An apparatus for preparing alkylated urea or melaimine formaldehyde resins from an alcohol having a boiling point higher than the boiling point of water comprising:
- a. reactor having heat and agitating means;

- b. a fractionating column having at least one theoretical plate of separation, and having a rectifying section above a stripping section;
- c. first conduit means for passing a mixture of said alcohol and water vapor from said reactor to the junction of the rectifying section and stripping section of said column;
- d. reboiler means connected to the bottom of said column, said reboiler having controls adapted to maintain a temperature below the boiling point of said alcohol;
- e. second conduit means connecting said reboiler and said reactor and adapted to return alcohol from said reboiler to said reactor;
- f. a condenser having coolant circulating means;
- g. third conduit means connecting rectifying section of said column to said condenser and adapted to pass a mixture of said alcohol and water vapor from said rectifying section to said condenser;
- h. a phase separator device capable of separating an alcohol phase comprising said alcohol from a water phase, said separator having an outlet at the bottom thereof for removing the water phase;
- i. fourth conduit means connecting said phase separator to said condenser and adapted to pass a condensed mixture of said alcohol and water from said condenser into said separator;
- j. fifth conduit means connecting the top portion of said phase separator to the top portion of said column and adapted to pass the alcohol phase from said separator into the top portion of said column.

4,065,268

NON-UNIFORM CRIMPED METAL RIBBON PACKED CATALYST BED AND METHOD USING SAME

Erwin C. Betz, 524 Mill Vallye Road, Palatine, Ill. 60067

Filed Sept. 15, 1975, Ser. No. 613,544

Int. Cl.[2] B01J *8/00, 35/06*

U.S. Cl. 23—288 F 11 Claims

1. A catalyst bed packed with catalytically active crimped metal ribbon wherein a substantial proportion of at least two different crimp configurations are present.

4,065,269

SPENT CATALYST REGENERATION APPARATUS

Richard P. Pulak, Palatine, Ill., assignor to UOP Inc., Des Plaines, Ill.

Continuation-in-part of Ser. No. 429,422, Dec. 28, 1973, Pat. No. 3,953,175. This application Apr. 12, 1976, Ser. No. 676,254

The portion of the term of this patent subsequent to Apr. 27, 1993, has been disclaimed.

Int. Cl.[2] B01J *8/08, 8/18, 37/14*

U.S. Cl. 23—288 B 7 Claims

1. An apparatus for oxidizing coke on spent catalyst which apparatus comprises in combination:
- a. a spent-catalyst-regenerated-catalyst admixture receiving chamber for containing a dense-phase fluidized bed of catalyst having a spent-catalyst-regenerated-catalyst admixture inlet means and a fresh-regeneration-gas inlet means connected thereto to allow passage of a spent-catalyst-regenerated-catalyst admixture and fresh regeneration gas respectively into said chamber and having a regenerated-catalyst/regeneration-gas outlet means connected thereto to allow passage of regenerated catalyst and spent-regeneration gas from said chamber;
- b. a spent-catalyst-regenerated-catalyst admixture conduit connected to said spent-catalyst-regenerated-catalyst admixture receiving chamber inlet means;
- c. a transfer conduit having a substantially vertical portion and a substantially horizontal portion, said vertical portion having an inlet connected to said regenerated-catalyst/regeneration-gas outlet means and said horizontal portion extending into the side of a hereinafter described regenerated-catalyst receiving chamber and having an outlet within said chamber whereby said regenerated catalyst and regeneration gas are carried from said spent-catalyst-regenerated-catalyst admixture receiving chamber in admixture to said regenerated-catalyst receiving chamber;
- d. a regenerated-catalyst receiving chamber for containing a dense-phase bed of regenerated catalyst, said chamber having a regenerated-catalyst outlet means and a spent-regeneration-gas outlet means connected thereto to allow passage of said regenerated catalyst and said spent regeneration gas from said chamber and said chamber being

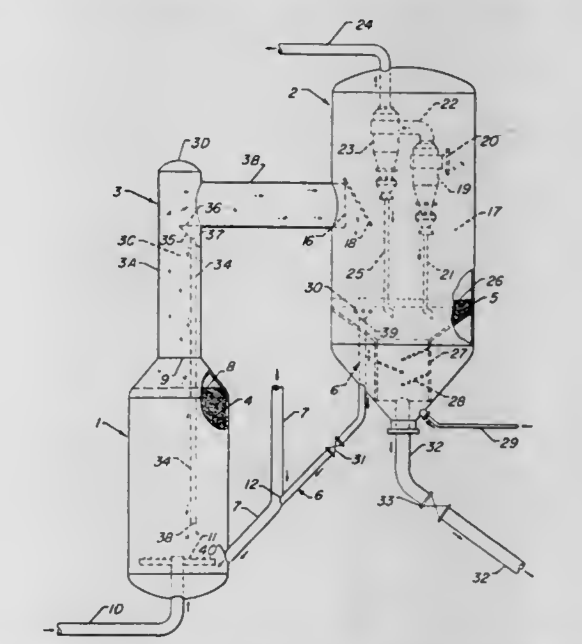

adjacent to and at an elevation with respect to said spent-catalyst-regenerated-catalyst admixture receiving chamber to maintain at least a portion of said dense-phase bed of said regenerated catalyst above said dense-phase fluidized bed of catalyst in said spent-catalyst-regenerated-catalyst admixture receiving chamber; and,
- e. an external regenerated-catalyst recycle means, external from said spent-catalyst-regenerated catalyst admixture receiving chamber, having an inlet means in said regenerated-catalyst receiving chamber and an outlet means in said spent-catalyst-regenerated-catalyst admixture conduit, to allow passage of a portion of said regenerated catalyst from said regenerated-catalyst receiving chamber in admixture with spent catalyst in said spent-catalyst conduit to said spent-catalyst-regenerated catalyst admixture receiving chamber.

4,065,270

PROCESS FOR PURIFYING SODIUM HYDROXIDE

Keiichi Nakaya, Chiba; Suekazu Hirata, and Kunio Sato, both of Ichihara, all of Japan, assignors to Asahi Glass Co., Ltd., Tokyo, Japan

Filed Apr. 16, 1976, Ser. No. 677,754

Int. Cl.[2] B01D *9/02;* C01D *1/30*

U.S. Cl. 23—299 17 Claims

1. A process for purifying sodium hydroxide which comprises:

cooling an aqueous solution of sodium hydroxide containing soluble impurities to form a slurry containing sodium hydroxide hydrate crystals and the fine impurity crystals; forming bubbles in said slurry, whereby said impurity crys-

tals are adsorbed on the bubbles and float upward therewith to form a foamed scum on said slurry; and

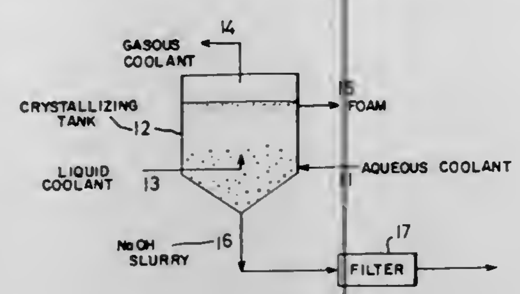

removing said scum from said slurry, thereby separating the impurity crystals from the sodium hydroxide crystals.

4,065,271
PROCESS OF SEPARATING HYDROGEN FLUORIDE FROM GASES
Ernst Weckesser; Volker Sparwald, both of Grevenbroich; Lothar Reh, Bergen-Enkheim; Eberhard Bohm, and Rolf Graf, both of Frankfurt am Main, all of Germany, assignors to Metallgesellschaft Aktiengesellschaft, Frankfurt am Main and Vereinigte Aluminium-Werke AG, Bonn, both of, Germany
Continuation of Ser. No. 488,930, July 19, 1974, abandoned. This application Oct. 10, 1975, Ser. No. 621,604
Claims priority, application Germany, Sept. 15, 1973, 2346580
Int. Cl.^{2} B01D *53/12;* **B03C** *3/00*
U.S. Cl. 55—2 **7 Claims**

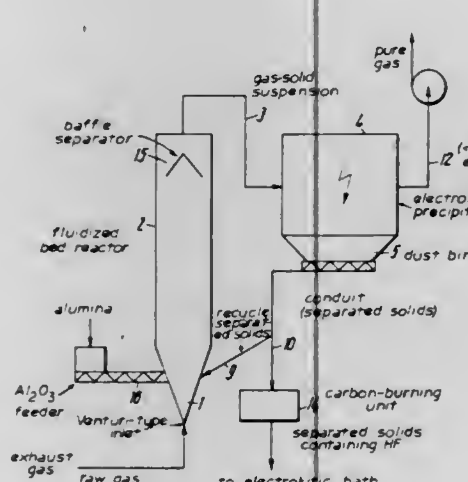

1. A process for removing hydrogen fluoride from a gas which comprises the combination of the following steps:
a. introducing the gas into a fluidized bed reactor at a velocity of 1 to 5m/sec calculated for the empty reactor to form a gas-solid suspension in which the solids concentration decreases from bottom to top and wherein the solids have a particle size of 20 to 300 microns;
b. extracting solids from said reactor substantially exclusively in an upward direction by entrainment with gas in a gas-solid suspension having a solids content of the order of 175 to 250 grams per cubic meter (STP) of the extracted suspension;
c. separating the solids extracted in step (b) from the entraining gas without prior removal of the solids from the gas-solid suspension which has a dust resistivity adjusted to be below 10^{12} Ohm-cm by means of an electrostatic precipitator directly following the reactor and constituting the sole gas/solid separator downstream of the reactor;
d. simultaneously with the separation of the solids from the entraining gas classifying the separated particles of the solids in said electrostatic precipitator into fine-grain and coarse-grain fractions;
e. recycling the coarse-grain fraction into the fluidized bed reactor to form a circulating fluidized bed therein while discharging the fine-grain fraction upon which impurities in said gas preferentially adsorb; and
f. discharging gas from said electrostatic precipitator after the separation of said particles therefrom as an exhaust gas containing at most about 1 mg/m^3 (STP) of fluorine as HF.

4,065,272
OXYGEN-ENRICHED AIR
John Walter Armond, Great Bookham, England, assignor to BOC International Limited, London, England
Filed Dec. 30, 1975, Ser. No. 645,316
Claims priority, application United Kingdom, Jan. 2, 1975, 98/75
Int. Cl.^{2} B01D *53/02*
U.S. Cl. 55—25 **8 Claims**

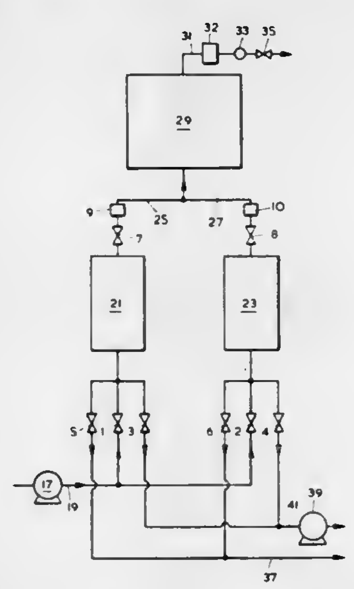

1. A process for producing oxygen-enriched air for respiration which comprises the sequential steps of passing air under superatmospheric pressure in a first direction into an inlet end of a unitary bed of an adsorbent that preferentially adsorbs at least moisture and nitrogen, and collecting an oxygen-enriched product gas from an outlet end of the bed in a reservoir at superatmospheric pressure, passing oxygen-enriched product gas from the reservoir through a pressure regulator to reduce the product gas pressure to a predetermined value for delivery for end use, regenerating the bed by venting the bed to atmospheric pressure in a direction counter-current to that of the superatmospheric pressurized air introduction in the first direction, evacuating the bed in the said counter-current direction to below atmospheric pressure, regulating the venting and the evacuating of the bed by utilization of selected differential pressures so that at the inlet end of the bed the actual volume of gas withdrawn during the venting and the evacuating exceeds the actual volume of superatmospheric pressure air fed into the inlet end of the bed in the first direction, backfilling the bed in said counter-current direction to generally atmospheric pressure by introducing product-quality gas from a source at superatmospheric pressure, whereby the regeneration of the bed is enhanced by moving residual gaseous material in the bed closer to the inlet end of the bed to thereby enhance desorption of adsorbent at the outlet end of the bed.

4,065,273
PROCESS FOR BREAKING EMULSIONS IN A TAR-CONTAINING AQUEOUS CONDENSATE
Paul Rudolph, Bad Homburg, Germany, assignor to Metallgesellschaft Aktiengesellschaft, Frankfurt am Main, Germany
Filed Mar. 4, 1976, Ser. No. 663,880
Claims priority, application Germany, Sept. 30, 1975, 2543532
Int. Cl.^{2} B01D *47/00*
U.S. Cl. 55—50 **5 Claims**

1. Separation process for removing tar from water in a condensate formed by the cooling of a raw gas produced by the gasification of coal with oxygen and water vapor under a

pressure of 20–80 bars, which comprises treating said raw gas in a scrubbing and cooling zone and withdrawing said condensate, enriching said condensate with at least one member of the

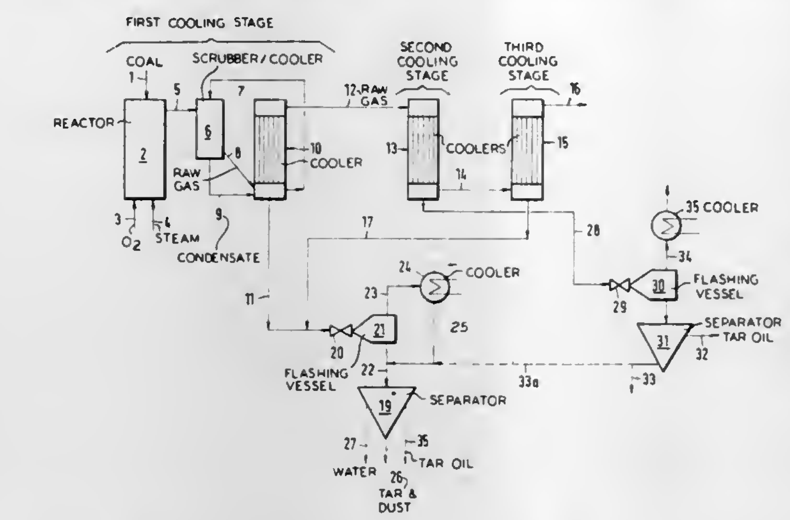

group consisting of ammonium carbonate and ammonium bicarbonate to a concentration of at least 5 grams NH_3 per kg H_2O, and separating tar from said condensate in a separation zone.

4,065,274
METHOD AND APPARATUS FOR REMOVING PARTICULATE POLLUTANTS FROM STACK GASES
Roland E. Langlois, Newark, Ohio, assignor to Owens-Corning Fiberglas Corporation, Toledo, Ohio
Continuation-in-part of Ser. No. 532,264, Dec. 12, 1974, abandoned. This application Jan. 26, 1976, Ser. No. 652,444
Int. Cl.^{2} B01D *47/16*
U.S. Cl. 55—89 **17 Claims**

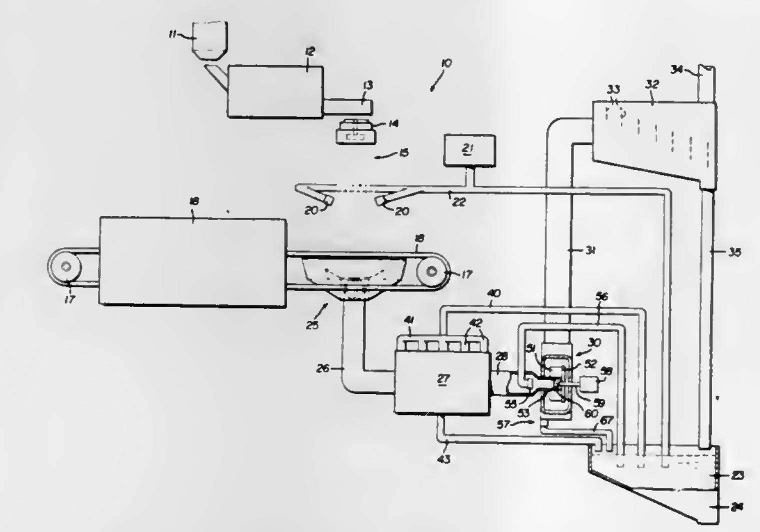

1. A method of removing fine particulate contaminants from a stream of process air comprising the steps of passing the stream of process air through a centrifugal fan having a fan inlet, injecting at least 1.5 gallons per minute of wash water into the inlet for each one thousand standard cubic feet per minute of process air flowing therethrough to break the volume of wash water into droplets and thoroughly wet the fan rotor and the interior of the fan housing, agglomerating the particulates into composite masses of substantially greater size and mass due to particlewater contact during the passage of the process air through the fan, forcing the wash water and at least a portion of the agglomerated composite masses to flow toward and travel along the inside surface of the outside wall of the fan housing, impinging the wash water and composite masses on a deflection member interposed into the path of travel along the inside surface of the outside wall of the fan housing to divert the flow of said wash water and composite masses through a discharge slot and out of the fan housing, and draining the diverted wash water and said at least a portion of the agglomerated composite masses away from the fan housing.

5. In a centrifugal fan assembly for separating particulate pollutants from a stream of process gas, said fan having a housing, rotary mounted radial fan blades, an inlet to feed said process gas into said fan, a spray means for injecting at least 1.5 gallons per minute of water through said fan inlet for each one thousand standard cubic feet per minute of process gas passing therethrough to break up said water into droplets thoroughly wetting the fan rotor and housing components for agglomerating said particulates into larger masses by particle-water contact for inertia-separation, the improvement comprising stripping means interposed at least partially into the interior of said housing and across substantially the entire width thereof for utilizing the kinetic energy of said water as it travels along the interior surface of said housing to positively expel the water and the agglomerated particulates contained therein from the interior of the fan housing.

4,065,275
ELECTRIC DUST PRECIPITATOR
Yosio Kikuchi, Toyama; Noriyuki Miyabayashi, Kosugimachi, and Masao Wada, Toyama, all of Japan, assignors to Nipponkai Heavy Industries Co., Ltd., Toyama, Japan
Filed July 16, 1976, Ser. No. 705,935
Int. Cl.^{2} B03C *3/74*
U.S. Cl. 55—121 **13 Claims**

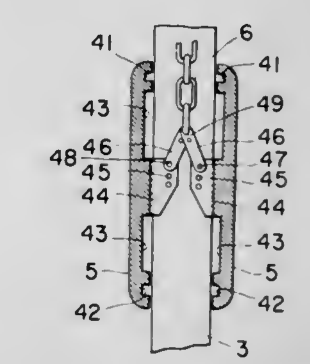

1. An electric dust precipitator comprising;
a pair of groups of dust-collecting electrodes disposed in parallel with each other in a chamber having a gas inlet and gas outlet;
a plurality of discharging wires disposed in parallel with and between said dust-collecting electrode groups, with a high direct current voltage being applied to said discharging wires and to said dust-collecting electrodes;
a horizontal scraping means being positioned around each of said groups and which includes a pair of sliding bars adapted to slide along opposite surfaces of said electrodes and having opposed brackets at the inside thereof, and a pair of drawing plates, one end of each of said drawing plates being pivotally connected to said brackets, and the other end of each of said drawing plates being commonly suspended by a chain;
and a winding means mounted above the top of said electrode groups for retracting said chain.

4,065,276
AIR-CLEANER
Akira Nakaya, and Haruyoshi Maruyama, Akashi, both of Japan, assignors to Akashi Factory, Kawasaki Heavy Industries, Ltd., Akashi, Japan
Filed Apr. 1, 1976, Ser. No. 672,715
Claims priority, application Japan, Apr. 14, 1975, 50-51074
Int. Cl.^{2} B01D *25/04*
U.S. Cl. 55—276 **1 Claim**

1. An air cleaner which isolates the pulsation of inspiratory pressure from an internal combustion engine, said air cleaner comprising:
a hollow air cleaner housing having an inlet opening thereinto and an outlet opening therefrom, said outlet opening

being connected to the induction system of said internal combustion engine;

a vibration-isolating cover removeably positioned within said air cleaner housing, said cover comprised of:

a cylindrical lower portion completely open at the top thereof and having an outlet opening in the bottom thereof fitted over said outlet opening of said air cleaner housing, and

a truncated, conical upper portion completely open at the bottom thereof and removeably fitted over said open top of said lower portion, the narrower upper portion thereof having an inlet opening through the top surface thereof aligned with said outlet opening through said lower portion;

a truncated conical support being narrower at the top than at the bottom, said conical support further having perforated sidewalls and being positioned within said lower portion at the bottom thereof over said outlet opening ;

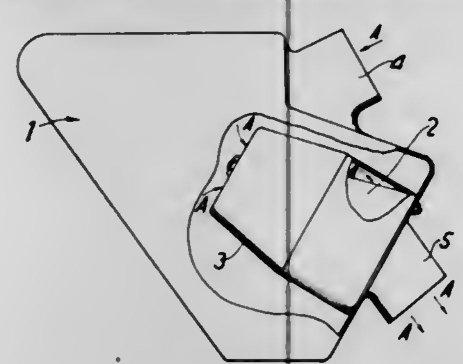

a bolt fixed to the top of said conical support and extending upwardly therefrom and a nut being threaded to the top projecting end of said bolt;

an inverted, truncated conical connecting spider fixed to and projecting downward toward said conical support from the underside of said truncated upper portion of said vibration-isolating cover around said inlet opening therein, said spider being open at the portion thereof adjacent said inlet opening, said spider further having a hollow guide post through the conical portion thereof surrounding said upwardly projecting bolt;

a support plate connected to the bottom end of said spider and surrounding said bolt and extending radially beyond the top of said conical support;

a hollow, conical and truncated air cleaner element positioned between said support plate and the bottom of said cylindrical lower portion of said vibration-isolating cover, surrounding said conical support and spaced substantially along the entire length thereof from the sidewalls of said vibration-isolation cover.

4,065,277
INLET FOR CYCLONE-TYPE PARTICULATE MATTER GAS SEPARATOR DEVICE

Francis E. Dahlem, Louisville, Ky., assignor to American Air Filter Company, Inc., Louisville, Ky.
Filed Aug. 13, 1976, Ser. No. 714,110
Int. Cl.^{2} B01D *51/00, 45/12*
U.S. Cl. 55—418 **10 Claims**

1. In a cyclone particulate matter gas separator of the type having a generally cylindrical housing having an inlet opening at one end for the ingress of a dirty gas stream to be cleaned, the improvement which comprises:

first means cooperating with the housing at the inlet opening thereof to define an outer annular channel converging in a generally axial direction of the housing from the exterior to the interior of the housing for directing a first stream of dirty gas into the housing and accelerating the first stream of dirty gas;

second means cooperating with the first means to define an inner annular channel concentrically disposed with the outer annular converging channel and converging in a generally axial direction of the housing from the exterior to the interior of the housing for directing a second stream of dirty gas into the housing and accelerating the second stream of dirty gas;

means for adjustably varying the volume rate of flow of the second stream of dirty gas into the inner annular channel; and,

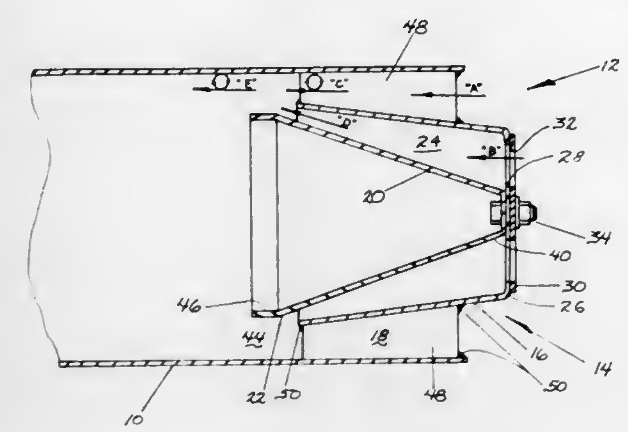

gas flow directing means disposed within the outer annular channel for imparting a whirling motion to the first gas stream flowing through the outer annular channel from the exterior to the interior of the housing.

4,065,278
PROCESS FOR MANUFACTURING LIQUEFIED METHANE

Charles L. Newton, Bethlehem, and Lee S. Gaumer, Allentown, both of Pa., assignors to Air Products and Chemicals, Inc., Allentown, Pa.
Filed Apr. 2, 1976, Ser. No. 673,162
Int. Cl.^{2} F25J *3/02*
U.S. Cl. 62—26 **4 Claims**

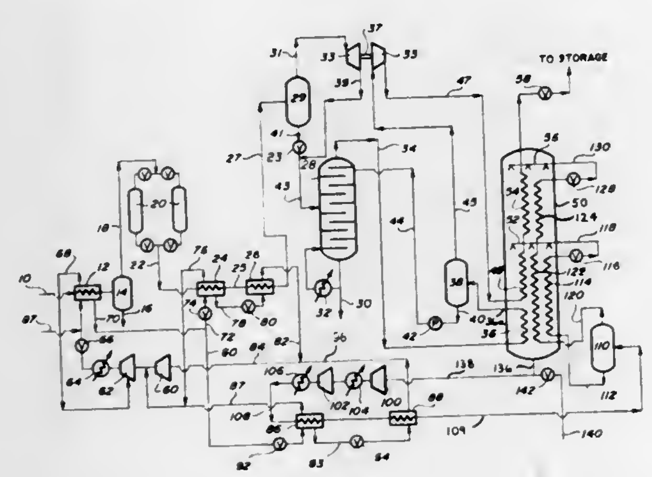

1. A liquefaction process for liquefying a natural gas feed stream comprising the steps of:

a. supplying said natural gas feed stream at a pressure at or above 860 psia,

b. cooling said feed stream in a plurality of heat exchange zones in indirect heat exchange with a refrigerant in a separate, closed loop refrigeration system,

c. isentropically expanding said feed stream to a first pressure which is below the critical pressures of both the overhead and bottom streams found in subsequent step (d) and thereby obtaining mechanical energy,

d. fractionating the expanded feed stream in a scrub column to form an overhead stream rich in methane and a bottom stream rich in heavy hydrocarbons,

e. cooling and partially condensing said overhead stream in indirect heat exchange with a multi-component refrigerant in a separate, closed loop refrigeration system,

f. phase separating said partially condensed overhead stream into a liquid fraction rich in heavy hydrocarbons and a methane-rich vapor stream,

g. supplying said liquid fraction to said scrub column as reflux,

h. supplying said methane-rich vapor stream at a temperature below $-100°$ F directly to a compressor, and compressing said stream to a pressure of at least 680 psia to form a high pressure methane-rich stream using the mechanical energy recovered in step (c),

i. supplying said high pressure methane-rich stream to a heat exchange zone,

j. cooling, liquefying and sub-cooling said high pressure methane-rich stream in said cooling zone in indirect heat exchange with said same multi-component refrigerant recited in clause (e), and

k. withdrawing said liquefied and sub-cooled methane stream as an LNG product stream.

4,065,279
SCROLL-TYPE APPARATUS WITH HYDRODYNAMIC THRUST BEARING

John E. McCullough, Carlisle, Mass., assignor to Arthur D. Little, Inc., Cambridge, Mass.
Filed Sept. 13, 1976, Ser. No. 722,695
Int. Cl.^{2} F25B *1/04;* **F16C** *17/04;* **F01C** *1/02;* **F04C** *17/02*
U.S. Cl. 62—510 **25 Claims**

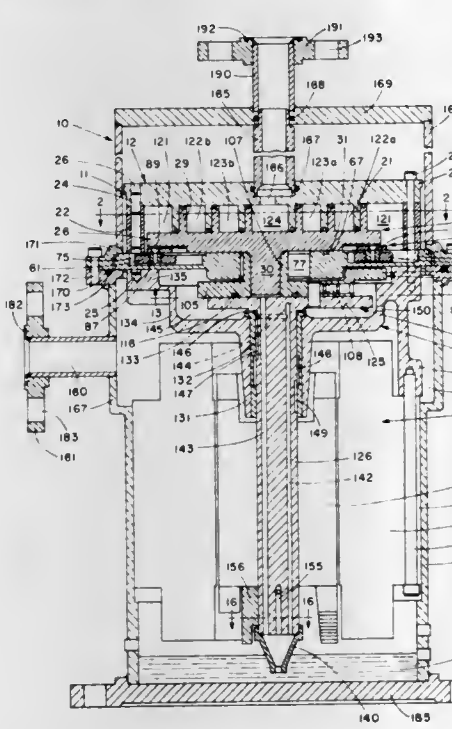

1. A flat plate hydrodynamic thrust bearing with a first contacting surface for use with a journal member having a second contacting surface which is driven to define an orbiting motion, characterized in that one of said contacting surfaces has intersecting groovings for carrying an oil lubricant, the pattern of said groovings being such that when said second surface undergoes said orbiting motion all points on the other of said contacting surfaces intersect a sufficient number of said groovings to ensure that said contacting journal and bearing surfaces are lubricated with a thin, essentially continuous film of said oil lubricant.

4,065,280
CONTINUOUS PROCESS FOR MANUFACTURING OPTICAL FIBERS

Charles K. Kao; James E. Goell, and Mokhtar S. Maklad, all of Roanoke, Va., assignors to International Telephone and Telegraph Corporation, Nutley, N.J.
Filed Dec. 16, 1976, Ser. No. 751,282
Int. Cl.^{2} C03B *37/02*
U.S. Cl. 65—3 A **12 Claims**

1. A continuous process for manufacturing optical fibers comprising the steps of:

depositing glass by a chemical vapor reaction onto at least one crucible having an orifice;

heating the crucible in order to melt the glass;

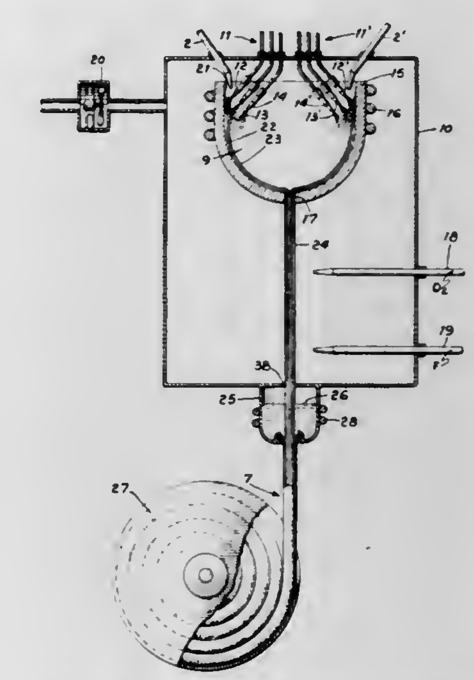

drawing the glass through the orifice into a fiber; and coating the fiber with a plastic cladding.

4,065,281
PRODUCTION OF AMBER GLASS

Robert Edward Byrne, Martinsville, N.J., assignor to Research-Cottrell, Bound Brook, N.J.
Filed May 5, 1976, Ser. No. 683,328
Int. Cl.^{2} C03B *5/16;* **C03C** *13/00*
U.S. Cl. 65—19 **1 Claim**

1. A method of producing amber soda-lime glass by a fusion process of

Sand: 22.8
Soda Ash: 8.0
Potassium Carbonate: 2.3
Sodium Nitrate: 2.1
Lime: 3.0
Feldspar: 1.6
Borax: 0.5
Antimony: 0.1

plus iron oxide Fe_2O_3 to the desired color, the improvement comprising substituting at least one percent of the silica content of the sand, lime and feldspar of the batch with lignite fly ash.

4,065,282
METHOD OF RECOVERY OF GLASS FROM MUNICIPAL WASTE

Booker W. Morey, Pasadena, Calif., assignor to Occidental Petroleum Corporation, Los Angeles, Calif.
Continuation of Ser. No. 621,525, Oct. 10, 1975, abandoned, which is a continuation of Ser. No. 464,798, April 29, 1974, abandoned. This application Mar. 15, 1977, Ser. No. 777,653
Int. Cl.^{2} C03B *1/00*
U.S. Cl. 65—28 **17 Claims**

1. In a process for the recovery of glass from municipal waste, including the steps of shredding said waste, subjecting said shredded waste to treatment in an air classifier, recovering a portion of the resulting air classified shredded waste containing glass, and subjecting said recovered portion of shredded waste to treatment on an air table; the improvement which comprises the steps of recovering the overhead material including glass from said air classifier, said air classifier being operated under conditions such that the glass contained in said overhead material has a particle size smaller than about 6 mesh, screening said overhead material obtained from said air classifier, recovering a screened material enriched in glass and sub-

jecting said screened material to treatment on an air table and recovering as first product a material consisting essentially of

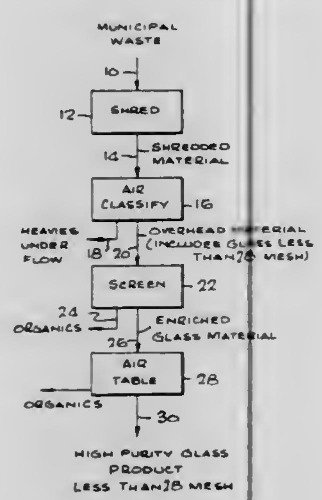

fine glass having a particle size less than about 6 mesh and of substantially reduced organics content, and as additional products other inorganics and organics.

4,065,283

METHOD FOR MAKING A GLASS-BASED SOFT-EDGED APERTURE FILTERS

Yoshijuki Asahara, Kawasaki, and Tetsuro Izumitani, Hino, both of Japan, assignors to Hoya Glass Works, Ltd., Tokyo, Japan

Filed Mar. 22, 1976, Ser. No. 668,999

Claims priority, application Japan, Mar. 22, 1975, 50-34613; May 20, 1975, 50-60061

Int. Cl.^{2} C03C *15/00;* **C03B** *11/08;* **C03C** *19/00*

U.S. Cl. 65—30 E **9 Claims**

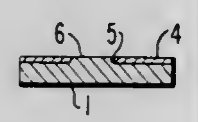

1. A method for producing a soft edged aperture filter to prevent Fresnel diffraction at the edge of a glass rod which comprises diffusing a coloring element into a glass plate which has on a first surface thereof a glass projection portion which does not extend to any side of the glass plate, wherein said diffusion is into the projection and into said first surface and bottom surface of the plate, and subsequently removing said glass projection portion down to said first surface having said diffused coloring element without disturbing said first surface and removing the diffused bottom surface to thereby provide a light transmittance gradient arranged in a circle on the glass plate, the gradient being a lowering of the light transmittance between the first and second surfaces of the glass plate in the radial direction from the inner to the outer portion of the circle.

4,065,284

METHOD OF TEMPERING GLASS SHEETS OF UNEQUAL THICKNESS

Raymond L. Mang, and Thomas W. Carr, both of Huntsville, Ala., assignors to PPG Industries, Inc., Pittsburgh, Pa.

Filed Mar. 1, 1977, Ser. No. 773,356

Int. Cl.^{2} C03B *27/00*

U.S. Cl. 65—114 **4 Claims**

1. A method of tempering glass sheets of unequal thickness so as to maintain their surface contours in close correspondence with one another, comprising the steps of:

placing a relatively thin sheet of glass into a furnace which includes an array of heating means, within which the thin sheet is first subjected to a preheating temperature slightly lower than a temperature suitable for tempering so as to substantially avoid distorting the glass sheet surfaces for a period of time sufficient to heat the thin glass sheet throughout its thickness to approximately said preheating temperature, after which the thin sheet is subjected to a temperature within said furnace higher than said preheating temperature so as to rapidly heat surface portions of the thin sheet to a temperature suitable for tempering at which glass surface distortion may occur;

removing the thin sheet from the furnace and introducing it into a quenching zone wherein blasts of cooling tempering medium are directed onto the sheet so as to impart a temper thereto;

in close succession to the treatment of the thin sheet, placing a relatively thick sheet of glass into said furnace, within which the thick sheet is first subjected to said preheating temperature for a period of time sufficient to heat the thick sheet throughout its thickness to approximately said pre-

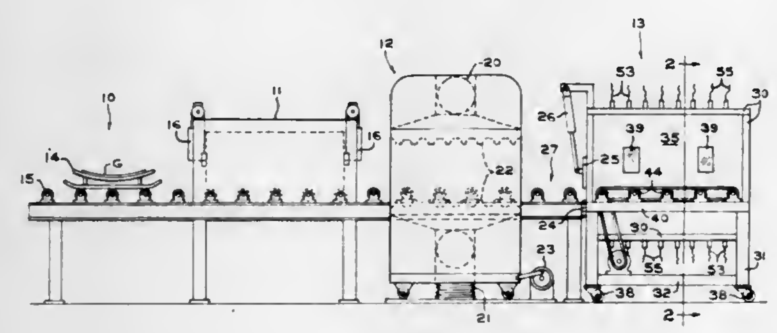

heating temperature, after which the thick sheet is subjected to a temperature within said furnace higher than said preheating temperature so as to rapidly heat surface portions of the thick sheet to a temperature suitable for tempering at which glass surface distortion may occur;

removing the thick sheet from the furnace and introducing it into said quenching zone wherein blasts of cooling quenching medium are directed onto the sheet so as to impart a temper thereto;

whereby the glass sheets experience substantially identical distortion-producing conditions while being subjected to disparate heating schedules in accordance with their thicknesses, so that a thick sheet and a thin sheet tempered in close succession have their surface contours in sufficiently close correspondence with one another to permit them to be laminated together.

4,065,285

SEAL FOR THRESHOLD COOLER OR HOLDDOWN MEMBER OF A FLOAT GLASS TANK

George A. Pecoraro, Lower Burrell, Pa., assignor to PPG Industries, Inc., Pittsburgh, Pa.

Filed Mar. 26, 1976, Ser. No. 670,609

Int. Cl.^{2} C03B *18/02*

U.S. Cl. 65—182 R **4 Claims**

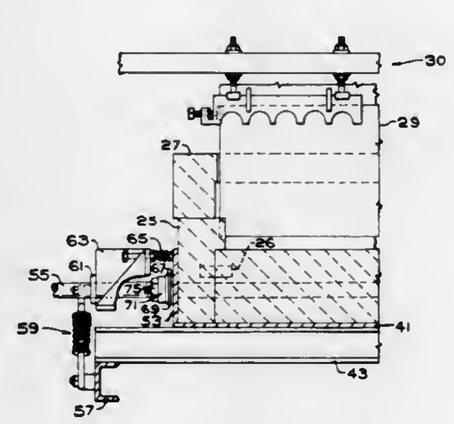

1. In an apparatus for making flat glass comprising a glass-making furnace connected to a glass forming chamber through a molten glass delivery facility wherein

the forming chamber includes an impervious metal casing having an inner refractory liner containing a pool of molten metal for supporting glass during forming and the delivery facility includes a refractory threshold for supporting molten glass during its delivery to the forming chamber with the threshold being at least partially disposed inside the casing between side casing plates and having at least one thermal control member extending completely through a transverse opening in the threshold and through openings in the side casing plates of the casing

the improvement which comprises a compression fitted seal disposed around each end portion of the thermal control member and the seals held against outer exposed faces of the side casing plates on both sides of the delivery facility with sufficient force to compress against the refractory threshold for completely sealing the transverse opening through the threshold from communication with gases surrounding the delivery facility.

4,065,286

MACHINE FOR THE PRODUCTION OF CONTAINERS OR THE LIKE OF VITREOUS MATERIAL

Kurt Becker, Obernkirchen, Germany, assignor to Hermann Heye, Obernkirchen, Germany

Continuation-in-part of Ser. No. 438,347, Jan. 31, 1974, abandoned, which is a division of Ser. No. 197,075, Nov. 9, 1971, Pat. No. 3,803,877, which is a division of Ser. No. 716,196, March 26, 1968, Pat. No. 3,622,305. This application Sept. 22, 1976, Ser. No. 725,445

Claims priority, application Germany, Apr. 1, 1967, 62338

Int. Cl.^{2} C03B *9/00, 9/40*

U.S. Cl. 65—229 **16 Claims**

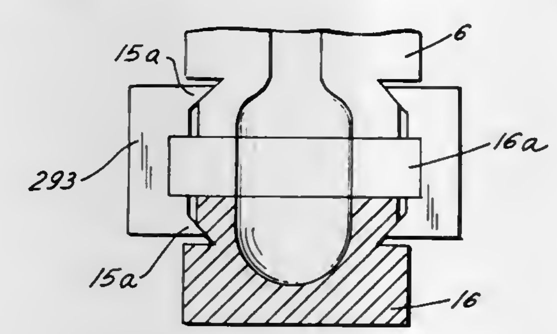

1. In a machine for the production of bottles or like hollow articles from plasticizable material, a combination comprising a mold construction including an upright bottom member, an annular neck ring located above and spaced from said bottom member and having an opening located substantially on a common axis with said bottom member, gripper means having a pair of halves movable between an open and a closed position, and a pair of mold center part halves carried by said gripper means between said neck ring and said bottom member movable with said two halves of said gripper means between said open and said closed position to define in said closed position with said neck ring and said bottom member a cavity of said mold, one of said pair of halves having opposite end portions respectively engaging in said closed position said neck ring and said bottom member and shaped to center said neck ring and said bottom member with respect to said center part, said halves of said gripper means being mounted for pivotal movement about a pivot axis parallel to said common axis; and means for moving said halves of said gripper means about said pivot axis between said open and said closed position.

5. In a machine for the production of bottles or like hollow articles from plasticizable material, a combination comprising a first turntable turnable about a first vertical axis and carrying a plurality of circumferentially spaced first mold means movable with said first turntable about said first vertical axis; a second turntable spaced from said first turntable and turnable about a second vertical axis, said second turntable carring a plurality of circumferentially spaced second molds means for movement with said second turntable about said second vertical axis; endless conveyor means extending between and encircling a portion of each turntable for movement in synchronism therewith; a plurality of neck rings carried by said conveyor means spaced therealong in correspondence with the spacing of said mold means on said turntables so as to be brought by movement of the latter in substantial alignment with said first and second mold means; first means carried by said first turntable and cooperating with said first mold means and said neck rings for converting gobs of plasticized material fed thereinto into parisons having ends located in the neck rings respectively aligned with said first mold means; second means carried by said second turntable and cooperating with said second mold means and said neck rings for converting parisons carried by said neck rings into finished articles; each of said mold means comprising a bottom member and a pair of complementary center part halves, and including gripper means for each of said mold means and having a pair of halves movable between an open and a closed position and respectively carrying said center part halves for movement therewith between said open and said closed position, one of said pair of halves having opposite end portions respectively engaging in said closed position said bottom member and a neck ring substantially aligned therewith so as to center the neck ring with the respective bottom member and the complementary center part halves along a common axis, said halves of said gripper means being mounted for movement about a pivot axis parallel to said common axis; and means for moving said halves of said gripper means about said pivot axis between said open and said closed position.

4,065,287

METHANOL TREATED ACTIVATED SLUDGE AS AN AGRICULTURAL CHEMICAL CARRIER

William B. Roth, Peoria, Ill., assignor to The United States of America as represented by the Secretary of Agriculture, Washington, D.C.

Filed June 17, 1976, Ser. No. 697,174

Int. Cl.^{2} C05F *3/00*

U.S. Cl. 71—13 **17 Claims**

1. An agricultural composition comprising:

a. an agricultural chemical selected from the group consisting of pesticides, fertilizers, insect attractants, and insect repellants, wherein said chemical is present in an amount ranging from about 0.001% to about 50% by weight of said composition;

b. methanol treated activated sludge (MAS) solids in an amount of from about 0.006% to about 2.5% by weight of said composition; and

c. a solvent.

4,065,288

NOVEL 2-CHLOROETHANE-(THIONO)-PHOSPHONIC ACID AMIDO COMPOUNDS AND PLANT GROWTH INHIBITING COMPOSITIONS

Wolfgang Hofer, Wuppertal-Vohwinkel; Reinhard Schliebs, Cologne; Robert Schmidt, Leverkusen, and Ludwig Eue, Cologne, all of Germany, assignors to Bayer Aktiengesellschaft, Leverkusen, Germany

Continuation of Ser. No. 413,134, Nov. 5, 1973, abandoned, which is a division of Ser. No. 119,912, March 1, 1971, Pat. No. 3,825,635. This application Oct. 28, 1975, Ser. No. 626,514

Claims priority, application Germany, Mar. 4, 1970, 2010119

Int. Cl.^{2} A01N *5/00*

U.S. Cl. 71—76 **15 Claims**

1. Plant growth inhibiting composition comprising an inert plant growth regulatingly acceptable carrier, and as an active ingredient, an effective amount of a 2-chloroethane-(thiono)-phosphonic acid amido compound of the general formula

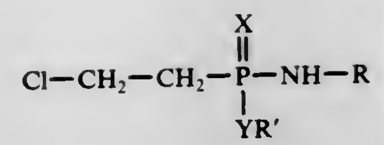

in which

X and Y, which may be the same or different, are oxygen or sulfur,

R is hydrogen or iso-propyl, and

R′ is alkyl of form 1 to 4 carbon atoms, or, if R is hydrogen and Y is sulfur,

R′ may additionally be phenyl which may be substituted by up to two chlorine atoms.

4,065,289
METHOD OF MAKING SOLID FERTILIZER HERBICIDE GRANULES

David John Judd, St. Albans, England, assignor to Murphy Chemical Limited, St. Albans, England

Continuation of Ser. No. 164,461, July 20, 1971, abandoned. This application Sept. 12, 1973, Ser. No. 396,404
Claims priority, application United Kingdom, July 24, 1970, 36111/70; July 12, 1971, 36111/71
Int. Cl.^{2} **A01N** *13/00*
U.S. Cl. 71—82 **11 Claims**

1. A method of making a plant fertilizer-herbicide composition which comprises:

a. making a dry mixture of 1 to 100 parts by weight of a plant fertilizer component (A) selected from the group consisting of urea, ammonium nitrate, ammonium sulphate, ammonium chloride, ammonium phosphate, calcium nitrate, sodium nitrate, potassium nitrate, urea-aldehyde condensates, methylene ureas and mixtures thereof with ammonium phosphate, potassium nitrate, potassium phosphate, potassium sulphate, and potassium chloride; and 1 part by weight of a herbicide component (B) having a melting or softening point below 145° C and below that of component (A) when mixed therewith, said component (B) also having a solubility in water not exceeding 1g/liter at 20° C; wherein said herbicide component is selected from the group consisting of 2-tert-butyl-4,6-dinitro-5-methylphenyl acetate, 2-tert-butyl-4,6-dinitro-phenyl acetate, 2-tert-butyl-4,6-dinitrophenyl ethyl fumarate, 3-(4-bromo-3-chlorophenyl)-1-methoxy-1-methylurea, 3-(4-chlorophenyl)-1-methoxy-1-methylurea, isopropyl N-phenylcarbamate, 2-chloro-N-isopropyl-acetanilide, and a triazine herbicide of the general formula:

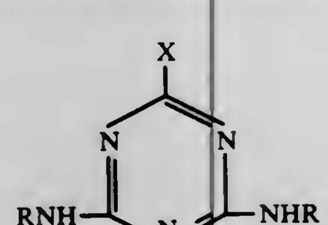

wherein X is OR or SR, the R groups being the same or different lower alkyl groups;

b. thereafter extruding the dry mixture through a die at a temperature of 70° to 145° C whereby said herbicide component acts as a lubricant to permit ready extrusion of said fertilizer component in solid form and subsequently solidifies to bind said fertilizer component into a coherent extrudate.

4,065,290
HERBICIDAL β-PHENYL-4-PIPERIDINONES

Harold Mellon Taylor, Indianapolis, Ind., assignor to Eli Lilly and Company, Indianapolis, Ind.

Continuation-in-part of Ser. No. 593,095, July 3, 1975, abandoned. This application May 20, 1976, Ser. No. 685,409
Int. Cl.^{2} **A01N** *9/22*
U.S. Cl. 71—94 **17 Claims**

1. A method of reducing the vigor of unwanted herbaceous plants which comprises contacting the plants with a herbicidally-effective amount of a compound of the formula

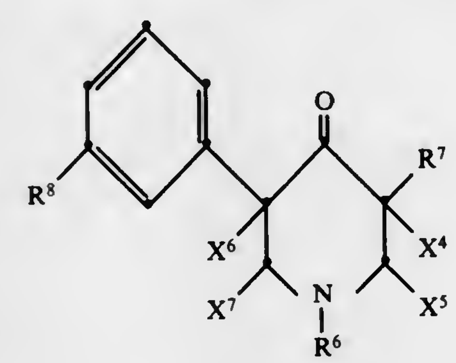

wherein

R^6 represents C_1–C_3 alkyl, C_2–C_3 alkenyl or propargyl;

R^7 represents
hydrogen,
phenoxy,
phenylthio,
C_1–C_4 alkyl,
C_1–C_4 alkoxy,
C_1–C_4 alkylthio,
phenyl or
phenyl monosubstituted with
chloro,
bromo,
fluoro,
trifluoromethyl,
C_1–C_3 alkyl or
C_1–C_3 alkoxy;

R^8 represents
chloro,
bromo,
fluoro,
trifluoromethyl,
C_1–C_3 alkyl or
C_1–C_3 alkoxy;

each of X^4 and X^5 represents hydrogen; and
each of X^6 and X^7 represents hydrogen.

10. A compound of the formula

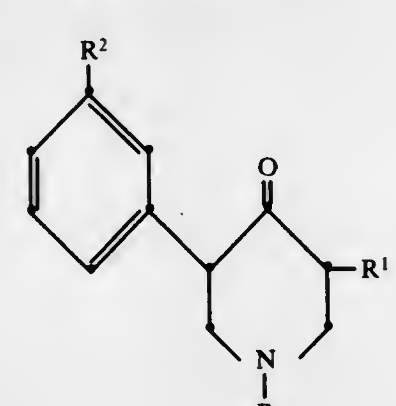

wherein

R represents methyl or ethyl;

R^1 represents
hydrogen,
phenoxy,
phenylthio,
C_1–C_4 alkoxy,
C_1–C_4 alkylthio,
C_1–C_4 alkyl,

phenyl or
phenyl monosubstituted with chloro or fluoro;

R^2 represents bromo, fluoro or trifluoromethyl.

13. A herbicidal composition which comprises an inert carrier and a compound of the formula

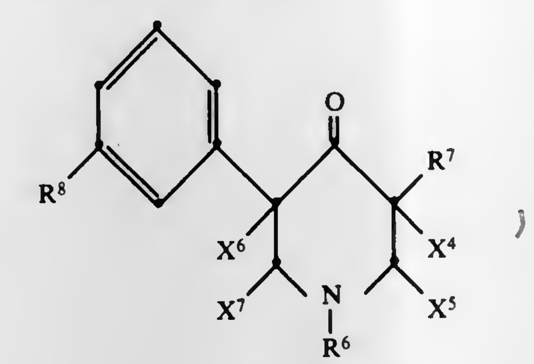

wherein

R^6 represents C_1–C_3 alkyl, C_2–C_3 alkenyl or propargyl;

R^7 represents
hydrogen,
phenoxy,
phenylthio,
C_1–C_4 alkyl,
C_1–C_4 alkoxy,
C_1–C_4 alkylthio,
phenyl or
phenyl monosubstituted with
chloro,
bromo,
fluoro,
trifluoromethyl,
C_1–C_3 alkyl or
C_1–C_3 alkoxy;

R^8 represents
chloro,
bromo,
fluoro,
trifluoromethyl,
C_1–C_3 alkyl or
C_1–C_3 alkoxy;

each of X^4 and X^5 represents hydrogen; and
each of X^6 and X^7 represents hydrogen.

4,065,291
HERBICIDAL 1-(2-HYDROXYMETHYLPYRROLIDINYL) CARBOXANILIDES

John W. Kobzina, Walnut Creek, Calif., assignor to Chevron Research Company, San Francisco, Calif.

Filed June 18, 1976, Ser. No. 697,498
Int. Cl.^{2} **A01N** *9/22;* **C07D** *207/08*
U.S. Cl. 71—95 **12 Claims**

1. A compound of the formula

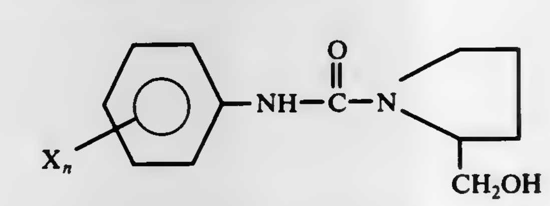

wherein X is hydrogen, fluoro, chloro, bromo, iodo, trifluoromethyl, trichloromethyl, alkyl of 1 to 4 carbon atoms, alkyl of 1 to 4 carbon atoms, alkoxy of 1 to 4 carbon atoms or cyano, and *n* is 1, 2 or 3.

4,065,292
HERBICIDAL AGENTS

Christa Fest, Wuppertal; Edgar Enders, Cologne; Ludwig Eue, Leverkusen, and Robert R. Schmidt, Cologne, all of Germany, assignors to Bayer Aktiengesellschaft, Leverkusen, Germany

Filed Sept. 1, 1976, Ser. No. 719,491
Claims priority, application Germany, Sept. 24, 1975, 2542468
Int. Cl.^{2} **A01N** *9/14*
U.S. Cl. 71—99 **5 Claims**

1. A method of combating weeds in corn which comprises applying to the corn habitat prior to weed emergence an effective amount of N-(3,4-dichlorophenyl)-N′,N′-dimethylthiourea of the formula

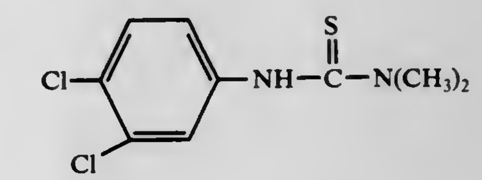

4,065,293
METHOD FOR CONTROLLING THE GROWTH OF WEEDS IN A FIELD CONTAINING GROWING PLANTS OF COTTON

Gerhard Boroschewski, and Friedrich Arndt, both of Berlin, Germany, assignors to Schering Aktiengesellschaft, Berlin & Bergkamen, Germany

Continuation of Ser. No. 610,908, Sept. 5, 1975, abandoned, which is a continuation of Ser. No. 444,408, Feb. 21, 1974, abandoned. This application Nov. 4, 1976, Ser. No. 739,154
Claims priority, application Germany, Mar. 1, 1973, 2310648
Int. Cl.^{2} **A01N** *9/12*
U.S. Cl. 71—100 **4 Claims**

1. A method for controlling the growth of weeds in a field containing growing plants of cotton which comprises applying to the field a compound of the formula:

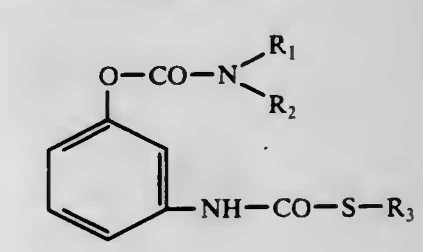

wherein R_1 is lower alkyl, allyl, lower haloalkyl; R_2 is lower alkyl, allyl, lower haloalkyl, lower alkinyl, cyclohexyl, benzyl, or phenyl-ethyl; R_3 is methyl or ethyl, said compound being applied in amounts sufficient to substantially prevent the growth of weeds without damage to cotton plants.

4,065,294
ENERGY CONSERVING PROCESS FOR PURIFYING IRON OXIDE

James E. Barker, Blue Ridge, Ga., assignor to Cities Service Company, Tulsa, Okla.

Continuation-in-part of Ser. No. 591,260, June 30, 1975, abandoned. This application Oct. 19, 1976, Ser. No. 735,228
Int. Cl.^{2} **C22B** *1/08*
U.S. Cl. 75—3 **27 Claims**

1. In a process of the purification of iron oxide normally using conventional fuels and conventional chlorinating agents and having the steps of:

a. Adding to the iron oxide a sufficient amount of binder,
b. Pelletizing the resulting mixture,
c. Drying the pellets and
d. Indurating the pellets to a temperature ranging from about 1200° C to about 1250° C and concurrently chlorinating the pellets using a conventional chlorinating agent:

the improvement comprising indurating and concurrently chlorinating the pellets using heat and chlorine valves

generated by combustion of a chlorinated hydrocarbon fuel having a heat of combustion of at least about 11,000 BTU/pound, said fuel comprising a mixture of chlorinated organic compounds having a combined elemental analysis of about 56% to about 87% carbon and about 9% to about 15% hydrogen and about 1% to about 35% chlorine.

4,065,295

SINTER MACHINE CONTROL AS A FUNCTION OF WASTE GAS TEMPERATURE

Fred Cappel, Sprendlingen; Walter Hastik, Frankfurt am Main, both of Germany; Georges Fleming, and Pierre Hofmann, both of Esch Alzette, Luxembourg, assignors to Dravo Corporation, Pittsburgh, Pa.

Filed July 29, 1976, Ser. No. 709,911

Claims priority, application Germany, Sept. 24, 1975, 2542473

Int. Cl.^{2} C22B *1/20*

U.S. Cl. 75—5 **3 Claims**

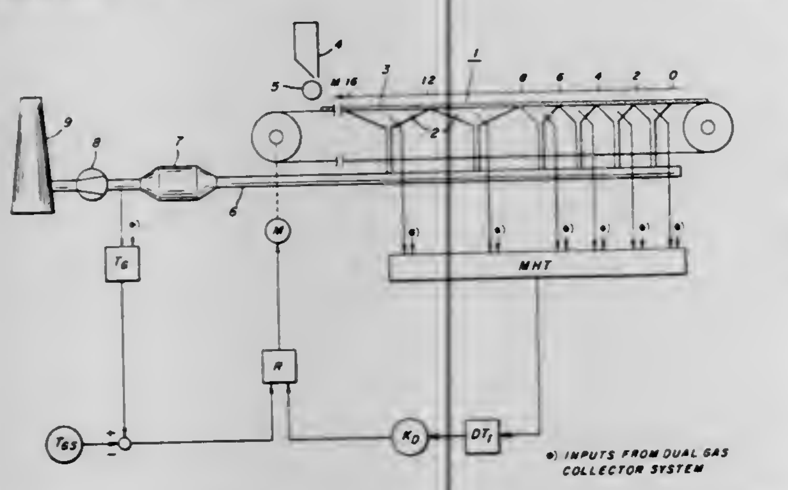

1. A process for the automatic control of the travel speed of strand sintering machines used in the sintering of iron-oxide bearing materials of fine particle size in which gas is drawn through the iron-oxide bearing materials into windboxes and is collected in a collecting pipe and in which the speed of the sintering machine is controlled to keep the burn-through point ahead of the discharge end of the machine by measuring the temperature of the collected waste gases in the collecting pipe, generating a first signal as a function thereof, applying said first signal to a regulator to generate a motor speed control signal and applying said speed control signal to a sinter machine drive motor control to control the speed of the machine as a function of the collected waste gas temperature and generating a second signal as a function of the temperature of the waste gases at the windboxes and applying said second signal to said regulator to modify the speed control signal whereby the speed of the sinter machine is controlled as a function of the collected waste gas temperature as modified by the temperature of the waste gases at the windboxes.

4,065,296

PROCESS FOR PREPARING COMPOSITION CONTAINING CARBON AND LOW SULFUR, NITROGEN AND ASH CONTENT

Wilfried Gemmeke, Essen; Heinrich Werner, Wattenscheid; Heinz Echterhoff, Essen, and Erich Raulf, Castrop-Rauxel, all of Germany, assignors to Verkaufsgesellschaft fur Teererzeugnisse (VfT), Essen, Germany

Division of Ser. No. 661,070, Feb. 25, 1976, Pat. No. 4,031,189. This application Dec. 10, 1976, Ser. No. 749,489

Claims priority, application Germany, Mar. 13, 1975, 2510876

Int. Cl.^{2} C21C *7/00*

U.S. Cl. 75—48 **9 Claims**

1. Process for carburizing iron or steel comprising adding to molten iron or steel a composition consisting essentially of carbon and containing only a small amount of ash, nitrogen and sulfur, said composition comprising a product obtained by:

A. drying a hydrous soot sludge of pasty consistency, said sludge having a water content of about 40 to about 70 percent by weight, with a hot flue gas having a temperature of about 600° C in a direct current operated dryer to form:

1. a vapor stream having a temperature of about 137° ± 20° C; and
2. a dried soot product having a water content of about 5 to about 20 percent by weight and a temperature of about 73° ± 10° C;

B. carbonizing said dried soot in a vertical flue oven by heating at a flue temperature of about 900° C to about 1300° C for about 25 to about 40 hours; and

C. drying, comminuting and classifying the resulting composition.

4,065,297

PROCESS FOR DEPHOSPHORIZING MOLTEN PIG IRON

Kantaro Sasaki; Takami Ikeda; Tohru Matsuo, and Takashi Okazaki, all of Amagasaki, Japan, assignors to Sumitomo Metal Industries Limited, Japan

Continuation-in-part of Ser. No. 727,517, Sept. 28, 1976, abandoned. This application Jan. 4, 1977, Ser. No. 756,968

Int. Cl.^{2} C21C *7/02*

U.S. Cl. 75—52 **11 Claims**

1. A process for dephosphorizing molten pig iron prior to charging it into a converter so as to obtain pig iron having a low phosphorus content, the process including

1. forming a slag by
   a. adding a dephosphorizing agent to the molten pig iron when the pig iron is at a temperature of less than 1450° C;
   b. adding an oxidizing agent to the molten pig iron when the pig iron is at a temperature of less than 1450° C; and
2. removing the slag;

said steps (1) (a) and (1) (b) being such as to form a slag having a % CaO in an amount which corresponds to 0.3 to 3.0 times the sum of the amounts of % SiO_2 and % P_2O_5, and a total iron of 15 to 50%.

4,065,298

STEEL MAKING PROCESS BY OXYGEN TOP-BLOWN CONVERTER

Akira Masui, Kawasaki; Kenzo Yamada, Tokyo; Akinori Ninomiya, Yokohama; Katsuhiko Tachibana, Kamakura, and Yoshihiro Kato, Yokohama, all of Japan, assignors to Nippon Kokan Kabushiki Kaisha, Tokyo, Japan

Filed Dec. 23, 1975, Ser. No. 643,840

Claims priority, application Japan, Dec. 28, 1974, 49-3519

Int. Cl.^{2} C21C *5/32*

U.S. Cl. 75—60 **2 Claims**

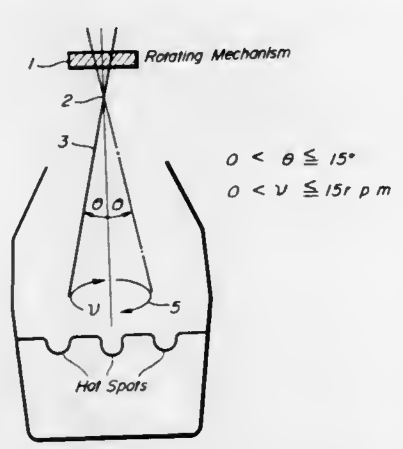

1. In a steel making process with an oxygen top blown converter wherein oxygen is blown in through a lance and wherein the hot spot formed by blowing is moved during blowing, the improvement which comprises maintaining the inclination angle (θ) of the lance from the supporting point of its upper portion within the range of $0 < \theta \leqq 15°$ to the normal vertical axis, and maintaining the number of rotations of the lance (ν) within the range of $0 < \nu \leqq 15$ rpm.

4,065,299

MAGNESIUM RECLAMATION PROCESS AND APPARATUS

Gregory Todhunter Roberts, Walnut; David Vincent Owens, Anaheim, and Raymond Frank Goodspeed, Garden Grove, all of Calif., assignors to Teledyne Industries, Inc., Los Angeles, Calif.

Filed Oct. 23, 1975, Ser. No. 625,150

Int. Cl.^{2} C22B *26/22*

U.S. Cl. 75—67 A **24 Claims**

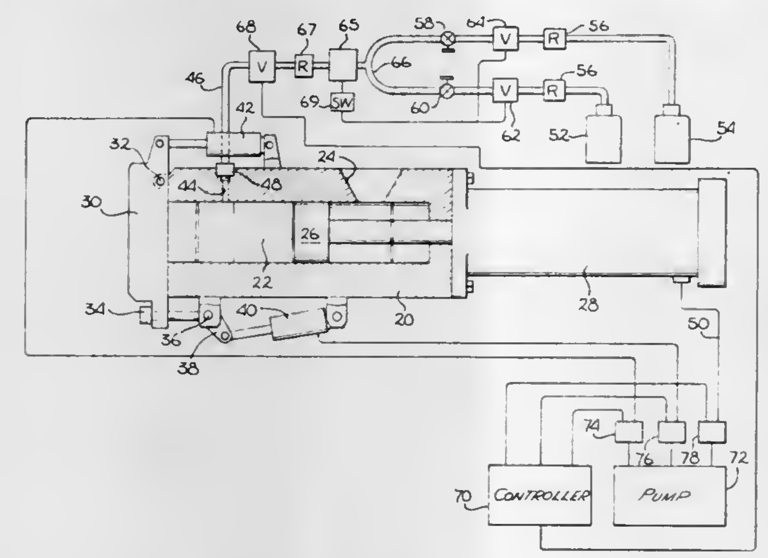

1. A method of compacting magnesium fines, chips and scraps comprising the steps of:

a. placing the magnesium in the confined chamber of a press,
b. pressing the magnesium at a low pressure to collect the magnesium at one end of the confined chamber and to expel a substantial portion of the air in the chamber,
c. withdrawing the pressing element while providing an inert atmosphere in the increasing chamber volume, and
d. pressing the magnesium at a high pressure to concentrate the magnesium into a self supporting pellet.

21. A method of recovering magnesium fines, chips and scraps comprising the steps of:

a. placing the magnesium in the cylinder of a press having a closure member at a first end thereof and a piston extendable into the cylinder from the second end of the cylinder, the closure of the cylinder at the first end being pervious to gases,
b. extending the piston with a low pressure to collect the magnesium at the first end of the cylinder and to expel a substantial portion of the air in the cylinder,
c. withdrawing the piston while injecting a mixture of CO_2 and SF_6 into the cylinder adjacent to the first end of the cylinder at a rate at least equal to the rate of increase of volume in the cylinder,
d. extending the piston with a high pressure to permeate the magnesium with the CO_2–SF_6 mixture and to concentrate the magnesium into a self supporting pellet.
e. ejecting the pellet from the cylinder and placing the pellet on the heel of a cold magnesium melting pot,
f. injecting an atmosphere of a mixture of CO_2 and SF_6 into the pot and,
g. heating the pot to melt the heel and pellet.

4,065,300

METHOD FOR EXTRACTION OF COPPER PRODUCTS FROM COPPER BEARING MATERIAL

Archie L. Poarch, Mesa, Ariz.

Filed June 28, 1976, Ser. No. 700,410

Int. Cl.^{2} C22B *15/08*

U.S. Cl. 75—117 **10 Claims**

1. An integrated process for preparing high-priority copper products from material comprising cement copper and/or other copper bearing materials comprising the steps of:

a. separating a powdered copper concentrate from said material;
b. preparing a copper nitrate solution in which copper is substantially the only metal ion present by reacting said concentrate in the presence of nitrogen with an aqueous solution of nitric acid to obtain copper nitrate in solution;

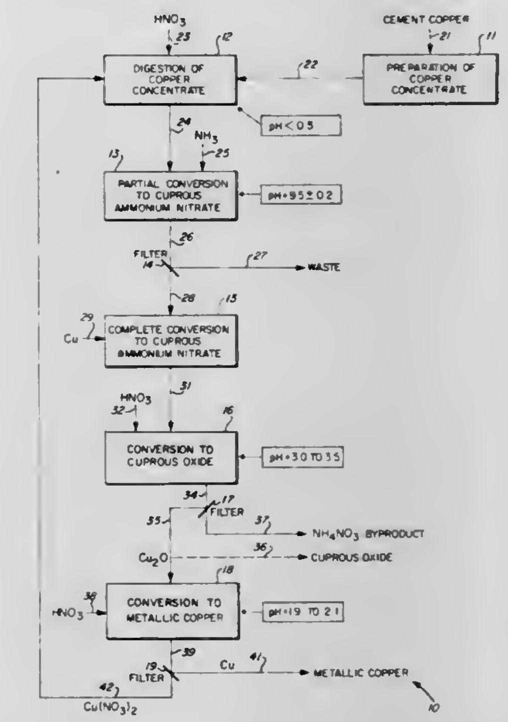

c. substantially completely reducing said copper nitrate with ammonia and copper bearing materials in the absence of oxygen to obtain cuprous ammonium nitrate in solution,
d. agitating said cuprous ammonium nitrate while maintaining a pH of approximately **3.0** to **3.5** and temperature of approximately 110 degrees Fahrenheit to 120 degrees Fahrenheit to obtain cuprous oxide, and
e. decomposing substantially all of said cuprous oxide with nitric acid to obtain metallic copper and copper nitrate in solution.

4,065,301

METHOD FOR PRODUCING TITANIUM NITRIDE-BASE SINTERED ALLOYS

Hiroshi Tanaka, Aichi, and Yoshihiro Yamamoto, Komaki, both of Japan, assignors to NGK Spark Plug Co., Ltd., Nagoya, Japan

Filed Nov. 24, 1975, Ser. No. 635,155

Claims priority, application Japan, Dec. 19, 1974, 49-146102

Int. Cl.^{2} B22F *3/16;* C22C *1/05*

U.S. Cl. 75—203 **8 Claims**

1. A method for producing titanium nitride-base sintered alloys, which comprises mixing carbon with a basic powdery raw material mixture composed of 65–95% by weight of TiN, 2–20% by weight of Mo and/or Mo_2C and 3–15% by weight of at least one iron family metal, the mixing amount of said carbon being 0.2–6.8 parts by weight based on 100 parts by weight of TiN contained in the basic raw material mixture, molding the resulting mixture and sintering the molded article, wherein when the molded article is sintered, the metal melts first, with fine particles of TiN and carbon dissolving into the molten metal while nitrogen gas escapes therefrom, and the dissolved carbon and titanium precipitate in the form of TiC on the surface of longer TiN particles, thereby resulting in a TiN-base sintered alloy composition.

4,065,302

POWDERED METAL CONSOLIDATION METHOD

Pierre Paul Turillon, Ramsey, N.J., assignor to The International Nickel Company, Inc., New York, N.Y.

Filed Dec. 29, 1975, Ser. No. 644,586

Int. Cl.^{2} B22F *3/14*

U.S. Cl. 75—208 R **11 Claims**

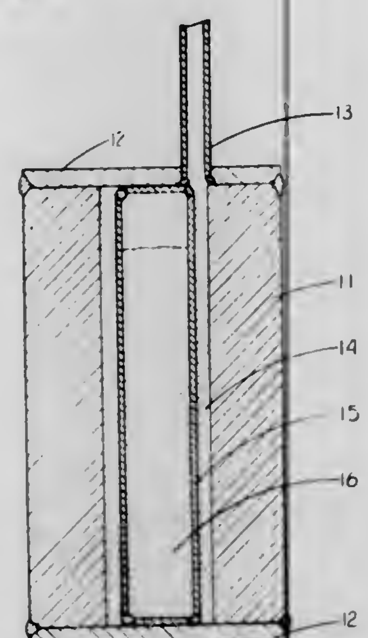

1. A process for compressing and sintering metal powder into a solidified structure comprising: enclosing a body of metal powder within a pressure-resistant container; providing adjacent to said metal powder and within said pressure-resistant container, a superplastic metal bladder containing a heat-decomposable compound adapted upon decomposition to release a gas within said metal bladder to expand said metal bladder and apply pressure to said metal powder; heating said pressure-resistant container above the decomposition temperature of said heat-decomposable compound and in the sintering temperature region for said metal powder thereby providing internally generated pressure to expand said metal bladder and compress and sinter together said metal powder to provide said solidified structure characterized by density at least 60% of theoretical density.

2. A process for coating a metal surface with a metal coating which comprises: providing adjacent to said metal surface to be coated a body of metal powder having a composition to provide said metal coating; providing a superplastic metal bladder containing a heat-decomposable compound, adapted upon decomposition to release a gas, therein in contact with said body of metal powder; surrounding said metal powder, said metal surface to be coated and said metal bladder with a pressure-resistant container; and heating a resulting assembly to a temperature above the decomposition temperature of said heat-decomposable compound and in the sintering temperature region for said metal powder thereby providing internally generated pressure to expand said metal bladder and compress and sinter said metal powder against said metal surface to provide said metal coating characterized by density at least 60% of theoretical density.

4,065,303

METHOD OF PRODUCING SHAPED OBJECTS

Helmut Seilstorfer, Munich, Germany; Willibald Wittich, deceased, late of Ottobrunn, Germany, and by Messerschmitt-Bolkow-Blohm GmbH, legal representative, Munich, Germany, assignors to Messerschmitt-Bolkow-Blohm Gesellschaft mit beschrankter Haftung, Munich, Germany

Filed Oct. 19, 1976, Ser. No. 733,792

Claims priority, application Germany, Dec. 19, 1973, 2363141

Int. Cl.^{2} B22F *1/00;* **C25D** *1/00*

U.S. Cl. 75—226 **7 Claims**

1. A method of forming a shaped object by compaction of metallic powder comprising:

a. forming a dummy object of a meltable material;

b. forming a mold within which said shaped object may be formed by hot isostatic pressing by electroforming on said dummy object a self-supporting layer having an outlet opening, said self-supporting layer thereby substantially enclosing said dummy object, said layer being formed of material having a melting point higher than the melting point of the material forming said dummy object;

c. removing the dummy object from within said layer by melting said dummy object at a temperature below the

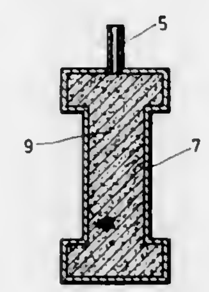

melting point of said layer and by discharging the melted material of said dummy object through said opening to form a hollow space substantially enclosed by said layer thereby to form said mold from said hollow layer;

d. filling said mold with metallic powder through said opening through which said melted material of said dummy object was discharged;

e. sealing said opening; and

f. subjecting the metallic powder within said mold to hot isostatic pressing to densify and compact the powder to form said shaped object.

4,065,304

METHOD FOR FIXING INK IMAGES

Herbert N. Johnston; Joseph A. Wray, both of Columbus; Joe David Robbins, Pickerington, all of Ohio, and Morton Schrager, Rochester, N.Y., assignors to Xerox Corporation, Stamford, Conn.

Filed Nov. 28, 1975, Ser. No. 636,337

Int. Cl.^{2} G03G *13/16, 13/14*

U.S. Cl. 96—1 LY **9 Claims**

1. A method for fixing an image, comprised of marking particles suspended in an oil carrier, which comprises:

a. applying said image to a transfer paper comprised of a paper substrate which contains an oil-absorbent masking material, and which bears a physically-discontinuous overcoating of a thermoplastic fusing material;

b. heating said fusing material beyond its melting point such that the fusing material flows and forms an essentially continuous overcoat on the paper; and

c. allowing said fusing material to cool to fix the image.

4,065,305

XEROGRAPHIC DEVELOPER

Don B. Jugle, Penfield, N.Y., assignor to Xerox Corporation, Stamford, Conn.

Filed Mar. 1, 1976, Ser. No. 662,644

Int. Cl.^{2} G03G *9/10, 13/08*

U.S. Cl. 96—1 SD **10 Claims**

1. An electrostatographic developer mixture comprising from between about 0.3 and about 5.0 percent by weight, based on the weight of said developer mixture, of finely-divided toner particles having an average particle diameter of from between about 5 to about 30 microns electrostatically clinging to the surface of carrier particles, said carrier particles comprising from between from 95.0 and 99.7 percent by weight based on the weight of said developer mixture, of particles having an average particle diameter of from between about 30 microns and about 1,000 microns, said carrier particles further comprising a mixture of carrier particles wherein from between about 99 percent and about 90 percent by weight of said carrier particles have an average particle diameter of approximately the same size and wherein from between about 1 percent and about 10 percent by weight of said carrier particles have an average diameter of from between about two and about three times larger than the diameter of said carrier particles having an average particle diameter of approximately the same size.

4,065,306

ELECTRON BEAM RECORDING MEDIA CONTAINING 4,4'-BIS(3-DIAZO-3,4-DIHYDRO-4-OXO-1-NAPHTHALENE-SULFONYLOXY)BENZIL

Daniel Louis Ross, and Lucian Anthony Barton, both of Princeton, N.J., assignors to RCA Corporation, New York, N.Y.

Division of Ser. No. 569,399, April 18, 1975, Pat. No. 4,005,437. This application Aug. 23, 1976, Ser. No. 716,540

Int. Cl.^{2} C07C *113/00;* **G03G** *5/04*

U.S. Cl. 96—1 R **9 Claims**

1. A medium for electron beam recording which comprises a mixture containing from about 1 to about 50% by weight of an active compound of the structure

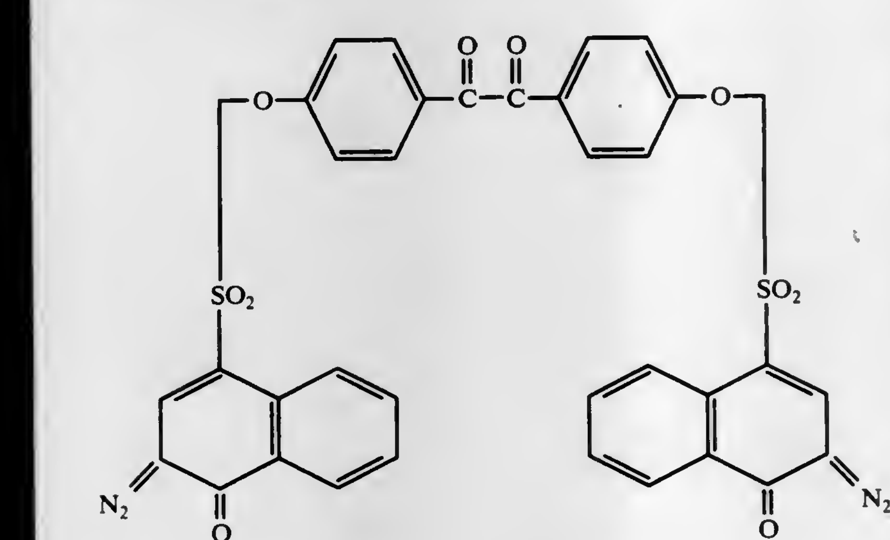

and an alkali-soluble resin.

9. 4,4'-bis(3-diazo-3,4-dihydro-4-oxo-1-naphthalenesulfonyloxy)benzil.

4,065,307

IMAGED AGGLOMERABLE ELEMENT AND PROCESS OF IMAGING

William L. Goffe, Webster, N.Y., assignor to Xerox Corporation, Stamford, Conn.

Division of Ser. No. 862,907, Oct. 1, 1969, Pat. No. 3,753,705. This application Mar. 2, 1973, Ser. No. 337,614

Int. Cl.^{2} G03Q *5/02, 5/04, 5/087*

U.S. Cl. 96—1.5 R **11 Claims**

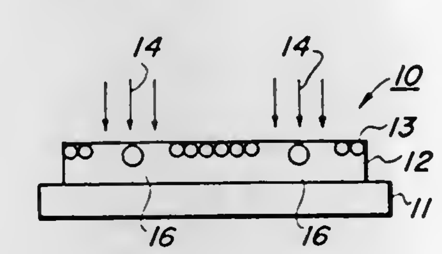

1. An imaged member comprising a softenable layer, an image configuration of agglomerable material in a relatively unagglomerated condition relative to a complementary image pattern comprising larger agglomerates, the relatively unagglomerated image pattern and the agglomerated complementary image pattern being located at the same level in depth in the softenable layer, the softenable layer in the unagglomerated image area being harder and corresponding portions of the imaged member being relatively less transparent than the portions of the imaged member corresponding to the agglomerated complementary image pattern areas.

4,065,308

DEFORMATION IMAGING ELEMENT

Richard F. Bergen, Ontario, N.Y., assignor to Xerox Corporation, Stamford, Conn.

Filed Apr. 24, 1975, Ser. No. 571,323

Int. Cl.^{2} G03G *13/22*

U.S. Cl. 96—1.5 R **9 Claims**

1. An imaging member comprising (i) a series of contiguous layers including a thermoplastic layer of a surface deformable material having a volume resistivity above about 10^4 ohm - cms, a layer of elastomer material having a volume resistivity above about 10^4 ohm - cms and an adjacent thin flexible metal electrode, (ii) a photoconductive insulating layer on a substrate, and (iii) means for establishing an imagewise electric field across said photoconductive layer and at least one of said surface deformable thermoplastic and said surface deformable elastomer layers; said surface deformable thermoplastic layer being thinner than the layer of said elastomer material.

4,065,309

METHOD OF ENHANCING THE INFORMATION LEGIBILITY OF MULTI-COLOR GRAPHIC MATERIAL

Sol Domeshek, 24 Springfield Ave., Cranford, N.J. 07016

Continuation of Ser. No. 514,698, Oct. 15, 1974, abandoned. This application Aug. 9, 1976, Ser. No. 713,019

Int. Cl.^{2} G03C *7/16, 7/00*

U.S. Cl. 96—14 **9 Claims**

1. Method of enhancing the information legibility of original multicolor graphic material, while retaining the colors of the original but reversing the colorless low optical density of the background of the original and high optical density of the black printed information of the original, said method including the steps of

A. analyzing the original multicolor graphic into its component colors by filtering the original multicolor graphic material through a set of at least 3 color separation filters covering the total visual spectrum to produce a set of positive filtered images of said original multicolor graphic material and simultaneously exposing each of a set of printing plates coated with light-hardening, panchromatically photosensitive, monochromatically recording material through halftone screens to each of said positive filtered images;

B. treating the set of printing plates by conventional photo-litho/photo-engraving development techniques so that each plate may print only the patterns of the filter-colored light that struck it;

C. coating each of the set of printing plates with an ink having a color like the color of the filtered image to which

each photocoated printing plate was originally exposed; and

D. overprinting respectively in register from each of the set of photographically developed, color filtered and ink coated printing plates onto an optically low density, colorless print receiving surface.

4,065,310

FIXING AND RETRIEVING RECORDED INFORMATION PRODUCED BY MEANS OF PHOTOSENSITIVE MATERIAL OF BIOLOGICAL ORIGIN

Esther Dujardin, 8, Avenue des Bois, 4050 Mery-Esneux, Belgium; Ysbrand Kuiper, Grammerode 21, St. Truiden, Belgium (B 3800); Rene Cremer, 2, Ave. des Tilleuls, Liege, Belgium (B 4000), and Cyrille Sironval, 8, Avenue des Bois, Mery-Esneux, Belgium (B 4050)

Continuation-in-part of Ser. No. 326,185, Jan. 24, 1973, Pat. No. 3,923,516. This application Oct. 30, 1975, Ser. No. 627,344

Claims priority, application United Kingdom, Jan. 25, 1972, 3498/72

Int. Cl.² G03C *5/04, 5/24*

U.S. Cl. 96—27 R **8 Claims**

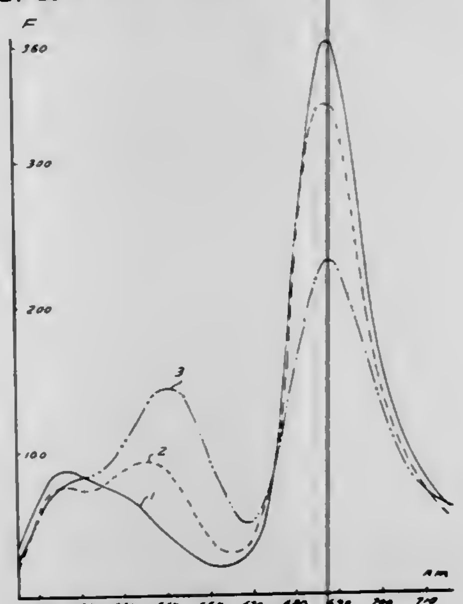

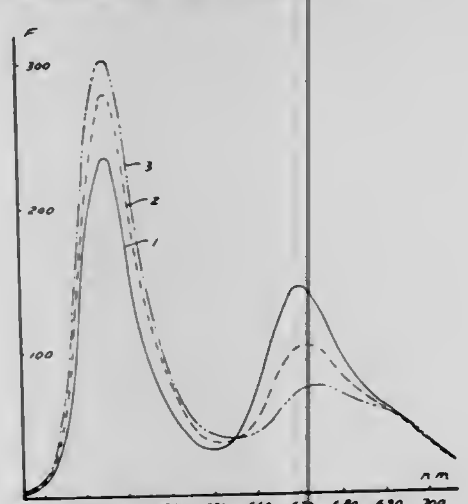

1. A method of recording and reproducing information comprising the steps of:
providing a photosensitive layer of protochlorophyll(ide)-apoprotein photoactive product upon a layer carrier;
information-wise exposing said layer to light of a wavelength absorbed by said complex thereby forming a pattern of differentials in light-absorption and fluorescence emission characteristics representing the exposition pattern to record information;
fixing said layer by denaturation of the protein of said photoactive product; and
retrieving the recorded information from said layer by detecting a pattern of differences in intensity of light absorption of the layer;
said photoactive product being formed by the steps of:
extracting from an etiolated plant material a photoactive protochlorophyll(ide) apoprotein binary complex with a buffer solution at a pH between 7 and 10 in the presence of an agent to protect the apoprotein against denaturation at a temperature of at most 5° C;
adding to said binary complex at a temperature of at most 5° C a natural or synthetic polymeric material selected from the group consisting of polyethylene glycol, polyvinylpyrrolidone, triethanolamine, saccharose and dextran to form a precipitate;
cold-centrifuging said precipitate to form a product which is either in complex or in association with said polymeric material;
lyophilizing said product at a temperature of at most 5° C so that the dried final product remains photoactive at room temperature; and
providing said product in layer form suitable for recording.

4. A method of recording and reproducing information comprising the steps of:
providing a photosensitive layer of protochlorophyll(ide)-apoprotein photoactive product upon a layer carrier;
information-wise exposing said layer to light of a wavelength absorbed by said complex thereby forming a pattern of differentials in light-absorption and fluorescence emission characteristics representing the exposition pattern to record information;
fixing said layer by denaturation of the protein of said photoactive product; and
retrieving the recorded information from said layer by subjecting the layer to light and measuring fluorescence emission from said layer;
said photoactive product being formed by the steps of:
extracting from an etiolated plant material a photoactive protochlorophyll(ide) apoprotein binary complex with a buffer solution at a pH between 7 and 10 in the presence of an agent to protect the apoprotein against denaturation at a temperature of at most 5° C;
adding to said binary complex at a temperature of at most 5° C a natural or synthetic polymeric material selected from the group consisting of polyethylene glycol, polyvinylpyrrolidone, triethanolamine, saccharose and dextran to form a precipitate;
cold-centrifuging said precipitate to form a product which is either in complex or in association with said polymeric material;
lyophilizing said product at a temperature of at most 5° C so that the dried final product remains photoactive at room temperature; and
providing said product in layer form suitable for recording.

4,065,311

GLASS PAINTING METHOD

Anthony Walter Osborne, Godalming, England, assignor to Intechsa, S.A., Freibourg, Switzerland

Filed June 9, 1976, Ser. No. 694,395

Claims priority, application United Kingdom, June 10, 1975, 24919/75

Int. Cl.² G03C *5/04*

U.S. Cl. 96—27 R **6 Claims**

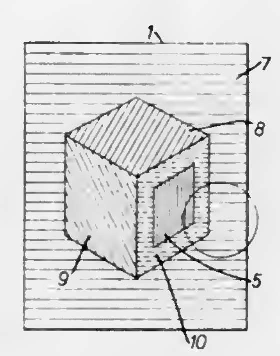

1. A process for the production of a painted reproduction on glass of a subject, which comprises photographing the subject using a fine grain medium contrast panchromatic photographic film, processing the film to produce a low-contrast image, projecting the image on the film as a black image on to a photographic glass plate coated with a slow, blue-sensitive high contrast orthochromatic emulsion having very fine grain and very high resolution, bleaching out the black image produced on said glass plate and toning said image in a colour other than black, coating the emulsion side of the glass plate with a clear varnish, and colouring the image on the glass plate with paint applied to the varnish coating in two stages, paint first being applied to detailed parts of the image in substantially exact conformity with the margins of the detail and paint thereafter being applied to remaining parts of the image after drying the paint applied to the detail parts, the paint being applied to said remaining image parts in such manner that small zones free of paint exist between adjacent painted areas.

4,065,312

PROCESS FOR THE PRODUCTION OF PHOTOGRAPHIC VESICULAR IMAGES IN PHOTOGRAPHIC SILVER HALIDE MATERIAL

Edith Weyde, Kuerten; Anita von Konig, and Werner Liebe, both of Leverkusen, all of Germany, assignors to AGFA-Gevaert, A.G., Leverkusen, Germany

Filed Apr. 16, 1975, Ser. No. 568,603

Claims priority, application Germany, Apr. 19, 1974, 2418997

Int. Cl.² G03C *5/26*

U.S. Cl. 96—50 R **22 Claims**

1. A dry process for the production of photographic images in a self-supporting or supported layer including the steps consisting essentially of imagewise exposing a layer which is 80% transparent and contains a light-sensitive silver salt cast from an emulsion having a pAg value below the equivalence point and having from 1 to 500 mg silver salt per square meter of the layer with silver salt grains of a grain size smaller than 0.3 μm, forming by said exposure image nuclei of silver imagewise in catalytic amounts capable of decomposing peroxide compounds on image nuclei; treating the said layer containing the catalytic amounts of nuclei of silver with hydrogen peroxide which is decomposed by the image nuclei to form light scattering vesicles; causing formation on said catalytic amounts of silver nuclei of an image of fine bubbles.

4,065,313

BLEACH-FIX REGENERATION MONITORING METHOD

Frederick Lee Shippey, Penfield, N.Y., assignor to Eastman Kodak Company, Rochester, N.Y.

Filed June 11, 1976, Ser. No. 695,273

Int. Cl.² G03C *5/32*

U.S. Cl. 96—60 BF **7 Claims**

1. In a process for regenerating a spent bleach-fix photographic solution to restore its bleaching capability and thereby permit its reuse in photographic processing, the bleaching agent being a ferric complex of an aminopolycarboxylic acid, the spent bleach-fix solution comprising silver ion and ferrous ion as a result of its use in a bleach-fix step of photographic processing which process of regeneration comprises in series a first silver replacement step in which silver ion in the spent bleach-fix solution is chemically replaced by reduction using elemental iron, and an oxidation step in which ferrous ion in the spent bleach-fix solution is oxidized to ferric ion;
the improvement comprising monitoring said regeneration process by electrochemically comparing the half-cell potential of the ferric-ferrous couple in a sample of the bleach-fix solution drawn from either said first silver replacement step or said oxidation step, with the half-cell potential of the ferric-ferrous ion couple in a reference solution drawn from a region of said regeneration process in which the bleach-fix solution is substantially insensitive to exhaustion of said elemental iron and insufficient oxidation, whereby either exhaustion of said elemental iron is detected when said sample bleach-fix solution is drawn from said first silver replacement step or insufficient oxidation is detected when said sample bleach-fix solution is drawn from said oxidation step.

4,065,314

PHOTOREACTIVE COMPOSITIONS COMPRISING POLYMERS CONTAINING ALKOXYAROMATICGLYOXY GROUPS

Thaddeus M. Muzyczko, Downers Grove, and Thomas H. Jones, Naperville, both of Ill., assignors to The Richardson Company, Des Plaines, Ill.

Continuation of Ser. No. 585,215, June 9, 1975, Pat. No. 3,969,119, which is a division of Ser. No. 267,475, June 29, 1962, Pat. No. 3,888,671. This application July 12, 1976, Ser. No. 704,494

The portion of the term of this patent subsequent to July 13, 1993, has been disclaimed.

Int. Cl.² G03C *1/68*

U.S. Cl. 96—115 R **21 Claims**

1. A light sensitive composition comprising: a polymer which includes as a recurring structure:

$$-[C(R)_2]_n-O-Ar-\overset{O}{\overset{\|}{C}}-\overset{O}{\overset{\|}{C}}-OM$$

wherein R is selected from the group consisting of hydrogen, aryl, alkyl, halo and aralkyl having up to 10 carbon atoms and n is an integer from 1 to 18, Ar is an aromatic substituent and M is selected from the class consisting of hydrogen, alkali metal, ammonium and substituted ammonium; and a photosensitizer in addition to said polymer.

4,065,315

PHOTOTROPIC DYE SYSTEM AND PHOTOSENSITIVE COMPOSITIONS CONTAINING THE SAME

Toshio Yamazaki, Mission Viejo; Harriet J. Cook, Los Alamitos, and Melvin A. Lipson, Fullerton, all of Calif., assignors to Dynachem Corporation, Tustin, Calif.

Filed Apr. 26, 1976, Ser. No. 680,304

Int. Cl.² G03C *5/24, 1/52, 1/68*

U.S. Cl. 96—48 QP **29 Claims**

1. A stable photopolymerizable composition comprising:
a. an acrylyl or methacrylyl compound thereof capable of forming a high polymer by free radical initiated polymerization;
b. a free-radical generating addition polymerization initiator activatable by actinic radiation;
c. the free base of a dyestuff whose halide salt is more intensely colored than the free base; and
d. the normally solid amide of a halogenated aliphatic carboxylic acid that releases halide free radicals upon exposure to actinic light.

4,065,316

PRINTING INK

William James Baron, Franklin Township, Somerset County, and Patrick John Capano, East Windsor, both of N.J., assignors to Western Electric Company, Incorporated, New York, N.Y.

Continuation-in-part of Ser. No. 706,655, July 19, 1976, abandoned. This application Nov. 17, 1976, Ser. No. 742,484

Int. Cl.² C09D *3/52, 3/58*

U.S. Cl. 106—20 **33 Claims**

1. A printing ink which comprises:
a. a resin mixture consisting essentially of an epoxy resin, combined with a second resin comprising a substantially anhydrous water-soluble thermosetting stable methylated urea-formaldehyde resin wherein the weight of the methoxyl substituents therein is between 28 and 40% of the weight of the resin and the molar ratio of the reacted formaldehyde in said resin to said methoxyl substituents is such that in the absence of organic solvent the resin at 25° C. is soluble to the extent of at least 50% by weight in water and dissolves at least 50% of its weight of toluene, the polymeric form of said resin being not substantially in

excess of tetrameric, the molar ratio of reacted urea to reacted formaldehyde in said resin and the molar ratio of reacted formaldehyde to reacted methanol therein being within the ranges:

Ranges	Molar ratio				
	Urea	$:CH_2O$	$:CH_3OH$	CH_2O	$:CH_3OH$
Lower	1	2.2	1.3	1	1.10
Upper	1	2.8	2.0	1	2.15

and said resin consisting essentially of

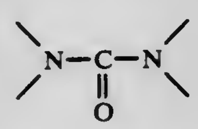

units, $-CH_2$ bridges between said units, and $-H$, $-CH_2OH$ and $-CH_2OCH_3$ substituents; and
b. a pigment.

4,065,317
NOVEL GLASS COMPOSITIONS
Nils Tryggve E. A. Baak, Princeton, N.J., and Charles F. Rapp, Toledo, Ohio, assignors to Nippon Electric Glass Company, Ltd., Otsu, Japan
Continuation of Ser. No. 193,576, Oct. 28, 1971, which is a continuation of Ser. No. 193,192, Oct. 27, 1971, which is a continuation of Ser. No. 546,049, April 28, 1966, abandoned. This application Dec. 3, 1971, Ser. No. 204,672
The portion of the term of this patent subsequent to Dec. 27, 1991, has been disclaimed.
Int. Cl.² C03C *3/00*
U.S. Cl. 106—52 **29 Claims**

1. A glass composition consisting essentially of 75 to 82 mole percent SiO_2, 2 to 8 mole percent ZrO_2, 1 to 5 mole percent Al_2O_3, 2 to 10 mole percent Na_2O, 2 to 10 mole percent K_2O, 2 to 10 mole percent CaO, 2 to 10 mole percent SrO, and 2 to 10 mole percent BaO, said composition being essentially free from boron.

4,065,318
WELL CEMENTING
William John Detroit, Schofield, and Michael Elliot Sanford, Wausau, both of Wis., assignors to American Can Company, Greenwich, Conn.
Filed Mar. 29, 1976, Ser. No. 671,159
Int. Cl.² C04B *7/35*
U.S. Cl. 106—90 **30 Claims**

1. In a cementing composition comprised of a hydraulic cement, a retarding agent additive therefor which is, in an amount between about 0.05 percent and about 3 percent based on cement composition weight;

an alkaline oxidized, hydrolyzed, partially desulfonated and subsequently resulfonated lignosulfonate, said resulfonated lignosulfonate having substituted herein as the resulfonation units, those of the formula: $-(CH_2)_x-SO_3H$, wherein x has a numerical integral value from 0 to 3, and alkali metal salt derivatives thereof;

said resulfonated lignosulfonate containing, on a percent by weight basis, based on lignosulfonate weight, between about $1\frac{1}{2}$ percent and about 15 percent of total sulfur in combined organic sulfonic sulfonate form; said lignosulfonate prior to resulfonation having a relative molecular size of substantially 1000 to 20,000.

4,065,319
TILE CEMENTS
Armand Joseph Desmarais, New Castle, Del., assignor to Hercules Incorporated, Wilmington, Del.
Filed Nov. 18, 1975, Ser. No. 633,061
Int. Cl.² C04B *7/353, 13/00*
U.S. Cl. 106—93 **1 Claim**

1. In a dry mortar-forming composition which consists essentially of about 24 to 99% by weight of hydraulic cement, about 0 to 75% sand, about 0 to 2% finely divided fibers, and about 0.4 to 4% of a water-retaining thickener, said dry composition being capable, when mixed with about 25 to 40% of its own weight of water, of producing a mortar which can be applied in thin layers for setting tile on walls and ceilings, the improvement which comprises said water-retaining thickener being a modified hydroxyethyl cellulose having hydroxyethyl M.S. between about 1.5 and 2.8 and a second substituent selected from the class consisting of

a. phenylhydroxyethyl at a D.S. level between about 0.04 and 0.15 and
b. benzyl at a D.S. level between about 0.04 and 0.15.

4,065,320
SYSTEM FOR HANDLING HIGH SULFUR MATERIALS
Glenn A. Heian, Franklin, Wis., and Robert F. Kohl, Tucson, Ariz., assignors to Allis-Chalmers Corporation, Milwaukee, Wis.
Filed May 13, 1975, Ser. No. 576,995
Int. Cl.² C04B *7/36*
U.S. Cl. 106—100 **19 Claims**

1. In a process for treating cement materials having a high sulfur and high alkali or a high sulfur content in a material treating furnace arrangement in which a stream of the material supplied by a pelletizer is progressed by grate means through a drying zone having a negative pressure drying zone wind box and a preheat zone having a bypass, a kiln and a cooling zone including a recoup system, and also having a double-pass fan system which pulls a gas stream from the kiln into the preheat zone and through the pellet bed on the grate and delivers the gases to the drying zone as drying heat, comprising the steps of:

A. directing sulfur-laden kiln off-gases into preheat zone;
B. adding a quantity of lime-bearing material which is chemically reactive with sulfur to sulfur-laden kiln off-gases in the preheat zone to effect a reaction between the sulfur in the gases and the added material to form a solid sulfur compound in dust form which moves with the gas stream;
C. mixing kiln off-gases that have been treated with the chemically reactive material from the preheat zone with tempering air;
D. passing the tempered mixed gases of step C through a dust collector to remove a major portion of the solid sulfur compound dust particles from the mixed gases; and,
E. passing the cleansed gases of step D to preheat zone.

4,065,321
PROCESS FOR THE PRODUCTION OF CEMENT CLINKER FROM FUEL SHALE
Karl Entzmann, 10, Eichbergstrasse, A-2371 Hinterbruhl, Austria
Filed Oct. 29, 1976, Ser. No. 737,013
Claims priority, application Austria, May 6, 1976, 3334/76
Int. Cl.² C04B *7/44*
U.S. Cl. 106—106 **8 Claims**

1. A method of processing an argillaceous or calcareous material capable of yielding a cement clinker to produce a cement clinker therefrom, comprising the steps of:

a. subjecting said material to mechanical disintegration in a pin-type disintegrator in which the particles formed are subjected to repeated acceleration and retardation within a period of less than about 0.05 second, thereby homogenizing and activating said material; and

b. sintering said disintegrated material at a temperature of between about 900° C. and about 1300° C. for a period of time between about 3 and about 10 minutes, thus volatilizing any organic components of said material and forming said clinker.

4,065,322
CONTAMINATION REMOVAL METHOD
John R. F. Langford, West Chester, Ohio, assignor to General Electric Company, Cincinnati, Ohio
Filed Feb. 23, 1976, Ser. No. 660,619
Int. Cl.² B08B *7/00*
U.S. Cl. 134—7 **37 Claims**

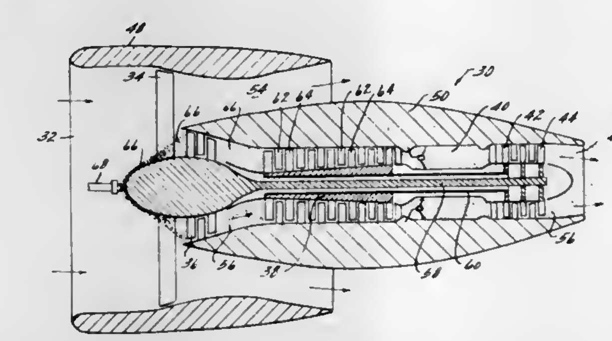

1. A method of removing contaminants from the surface of a metallic article comprising the steps of:

providing abrasive particles comprised of coke; and
directing said abrasive particles in impingement onto said contaminated surface thereby removing said contaminants therefrom.

4,065,323
DEGREASING PROCESS USING STABILIZED METHYLCHLOROFORM SOLVENT
Charles L. Cormany, Wadsworth, Ohio, assignor to PPG Industries, Inc., Pittsburgh, Pa.
Filed Sept. 16, 1976, Ser. No. 723,876
Int. Cl.² B08B *3/08, 7/04*
U.S. Cl. 134—10 **8 Claims**

1. In a process for degreasing metal articles by contacting metal articles in a cleaning zone with methylchloroform solvent, said solvent stabilized by a stabilizing agent including an organic epoxide, the improvement comprising:

maintaining the acid acceptance of the solvent by continuously performing the step of removing stabilized methylchloroform solvent from the cleaning zone, treating said removed solvent by contacting it with a continuous liquid phase consisting essentially of polyhydroxy alcohol having a density lower than said solvent and having low solubility therein of less than 5.0 percent by volume, having high affinity for water, and having less than about 10 weight percent absorbed water, thereafter separating treated solvent from said polyhydroxy alcohol phase, and returning said treated solvent to the cleaning zone.

4,065,324
CONTACT LENS CLEANING SOLUTION
Billy F. Rankin, Rockville, Md., assignor to Burton, Parsons and Company, Inc., Washington, D.C.
Filed Dec. 16, 1976, Ser. No. 751,068
Int. Cl.² B08B *3/10, 11/00;* **C11D** *7/10, 7/14*
U.S. Cl. 134—30 **13 Claims**

1. A solution for cleaning hydrophobic silicone or hydrophilic soft contact lenses, which solution comprises sodium sesquisilicate dissolved in deionized or distilled water to the extent of 0.5% by weight and sufficient dilute hydrochloric acid to achieve a pH of approximately 7.0.

2. A method of cleaning proteinaceous and other tear deposits from soft contact lenses which method comprises applying to said lenses a few drops of an aqueous solution containing from about 0.1–5% crystalline sodium silicate, said solution having an isotonic pH of about 7.0, rubbing the lenses with the fingers and rinsing with water.

4,065,325
ADAPTABLE FLUSH ATTACHMENT FOR MARINE ENGINES HAVING SIDE COOLING WATER PORTS
John Vincent Maloney, 1985 Illinois Ave. NE., St. Petersburg, Fla. 33703
Filed Mar. 25, 1976, Ser. No. 658,761
Int. Cl.² B08B *3/02, 9/00*
U.S. Cl. 134—167 R **6 Claims**

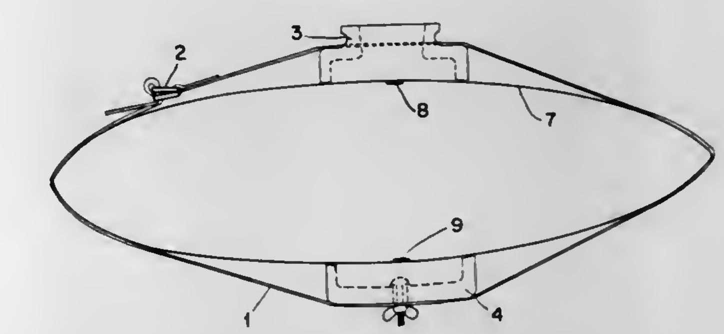

1. A fresh water flushing device for small boat marine engines having side cooling water ports in the drive unit housing, consisting of a flexible strap, a flexibly resilient non-metallic generally rectangular cup shaped device having an aperture in the bottom center of such an internal diameter to tightly engage a common garden hose male fitting, the rim of the cup shaped device being substantially rigid and extending outwardly from the housing at substantially right angles to the cooling water ports and being of such size as to surround the cooling water inlet ports on one side of the unit, this cup shaped device being attached in a lengthwise fixed position on the strap, a second generally rectangular cup shaped device similar in size and material to the first cup adjustably fixed to the strap at a lengthwise location thereon as to cover the cooling water ports on the opposite side of the unit, the strap extending beyond both cup shaped devices and of a length to be wrapped around the motor shaft drive unit with a quick detachable fastener at the end of the strap to perform the function of attaching the ends of the strap at whatever length required to hold the device in place on the motor shaft drive unit thereby providing a flushing attachment adaptable to all types and sizes of outboard and inboard/outboard marine engines with side cooling water ports.

4,065,326
ELECTRICAL CONDUCTORS OF ALUMINUM-BASED ALLOYS AND PROCESS FOR THE MANUFACTURE THEREOF
Jean-Claude Nicoud, Saint-Egreve, France, assignor to Societe de Vente de l'Aluminium Pechiney, Paris, France
Filed May 28, 1976, Ser. No. 691,010
Claims priority, application France, May 28, 1975, 75.17202
Int. Cl.² C22F *1/04*
U.S. Cl. 148—2 **4 Claims**

1. In a process for the production of a wire by the sequential steps of continuously casting and rolling of a bar of an aluminum-silicon alloy consisting of by weight from 0.30 to 0.80% of Mg, from 0.30 to 0.70% of Si, from 0.15 to 0.35% of Fe, less than 0.20% of Cu, and the remainder of aluminum and the usual impurities, said rolling being carried out at a temperature of between 400° and 500° C and drawing the rolled bar into wire, the improvement comprising immediately after drawing rapidly cooling said rolled bar to a temperature below 150° C, tepid drawing at a temperature of from about 110° C to about 180° C with an elongation of at least 350%, followed by artificially aging at a temperature between about 130° C and about 240° C wherein the ultimate tensile strength of the wire is about 37 kg/mm² to about 41 kg/mm².

4,065,327
BLACK CHROMATE COATINGS
John Russell House, Slough, England, assignor to Imasa Limited, England
Filed Nov. 15, 1976, Ser. No. 742,112
Claims priority, application United Kingdom, Nov. 24, 1975, 48273/75
Int. Cl.² C23F *7/26*
U.S. Cl. 148—6.21 **6 Claims**

1. A method for treating a black chromate coated zinc or cadmium metal surface, which method comprises:
a. providing an aqueous solution at a pH of 4 to 10 and a temperature of from 10° C to 100° C containing at least 0.05 molar concentration of a sulphur-containing compound selected from the group consisting of thiousulphate thioglycolate and thiourea,
b. dipping the black chromate coated zinc or cadmium metal surface in the aqueous solution for a period of from 1 second to 1 hour, and
c. drying the treated coated surface.

4,065,328
HIGH STRENGTH SN-MO-NB-ZR ALLOY TUBES AND METHOD OF MAKING SAME
Brian A. Cheadle, Deep River, Canada, assignor to Atomic Energy of Canada Limited, Ottawa, Canada
Filed Apr. 28, 1976, Ser. No. 681,293
Claims priority, application Canada, May 6, 1975, 226385
Int. Cl.² C22F *1/18;* **C22C** *16/00*
U.S. Cl. 148—12.7 B **9 Claims**

1. In a method of fabricating extruded alloy tubes from an alloy consisting essentially of Sn 2.5–4.0%, Mo 0.5–1.5%, Nb 0.5–1.5%, O 800–1300 ppm, balance Zr and incidental impurities, in which said alloy is preheated to a temperature in the range 850°–900° C, extruded through a tube forming die, cold worked to size and age hardened by heating at a temperature in the range between 400° and 500° C, the improvement comprising rapidly cooling said extruded tube immediately following extrusion at a rate of at least 30° C per second so as to develop a microstructure comprising hexagonal α grains elongated in the extrusion direction and an acicular grain boundary phase.

7. A high strength extruded alloy tube made by the process of claim 1.

4,065,329
CONTINUOUS HEAT TREATMENT OF COLD ROLLED STEEL STRIP
Philippe Paulus, and Mario Economopoulos, both of Liege, Belgium, assignors to Centre de Recherches Metallurgiques-Centrum voor Research in de Metallurgie, Brussels, Belgium
Filed Jan. 16, 1977, Ser. No. 649,597
Claims priority, application Luxembourg, Jan. 17, 1975, 76664
Int. Cl.² C21D *1/48*
U.S. Cl. 148—18 **9 Claims**

1. In a process for continuously heat-treating steel elongated products to increase the limit of elasticity, ductility and homogeneity of properties throughout its width, including the steps of heating the product to a first temperature between its recrystallization temperature and 1000° C, maintaining the process at the first temperature for at least 30 seconds to recrystallize the product and quenching the product, the improvement being that the product is a cold-rolled strip, and providing an aqueous bath quenching medium maintained at a temperature selected to yield a strip product exhibiting a deviation in elastic limit in the direction of width less than ± 3% from the value at the longitudinal axis, which temperature is substantially the boiling point of the bath within a range of 80° to 150° C, immersing the strip in said bath for a time of from 10 seconds to

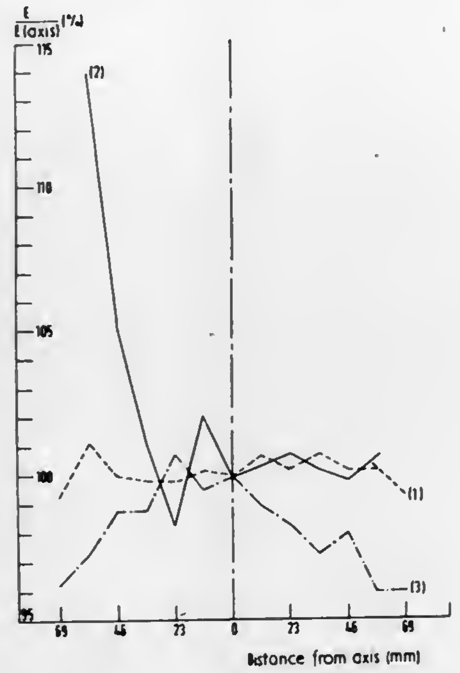

2 minutes to cool the strip to a second temperature, then further cooling the strip to ambient temperature.

4,065,330
WEAR-RESISTANT HIGH-PERMEABILITY ALLOY
Hakaru Masumoto, Sendai, and Yuetsu Murakami, Izumi, both of Japan, assignors to The Foundation: The Research Institute of Electric and Magnetic Alloys
Continuation-in-part of Ser. No. 604,995, Aug. 15, 1975, abandoned. This application Feb. 22, 1977, Ser. No. 770,267
Claims priority, application Japan, Sept. 26, 1974, 49-110881; Mar. 7, 1975, 50-27864; Apr. 4, 1975, 50-41082
Int. Cl.² C04B *35/00;* **C22C** *38/06*
U.S. Cl. 148—31.55 **12 Claims**

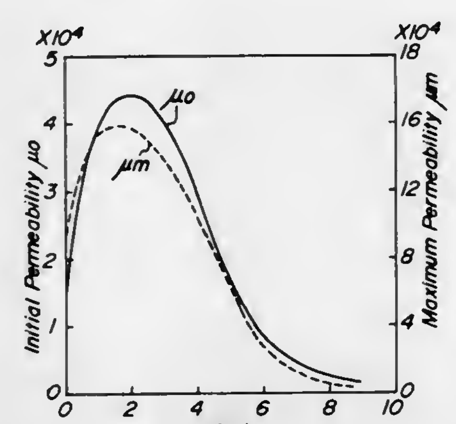

1. A heat treated, wear-resistant high-permeability alloy having an initial permeability of more than 1,000, a maximum permeability of more than 3,000, a hardness of more than 490 (Hv) and an average grain size of smaller than 2 mm, and consisting of by weight 3–13% of silicon, 3–13% of aluminum, 0.01–7% of at least one element selected from yttrium and lanthanum series elements and remainder of iron.

4,065,331
ROLLED LOW CARBON NIOBIUM STEEL
Frederick J. Semel, Philadelphia, Pa., assignor to Alan Wood Steel Company, Conshohocken, Pa.
Filed Oct. 8, 1976, Ser. No. 730,937
Int. Cl.² C22C *38/06, 38/16*
U.S. Cl. 148—36 **2 Claims**

1. A steel in the as-rolled condition as a result of normal rolling practice having a lower yield point of at least 42.0 kilograms per square millimeter at room temperature, and a 2.8 kilogram meter Charpy V-notch transition temperature of no greater than −50° C, having a composition consisting essentially of the following, expressed in percentages by weight:

Carbon	.07 to .11
Manganese	.40 to .60
Silicon	.30 to .40
Nickel	.20 to .30
Copper	.20 to .30
Aluminum	.08 to .10
Niobium	.07 to .12
Nitrogen	.008 to .011
Iron and impurities	Balance

4,065,332
HYBRID PROPELLANT COMPOSITIONS
Michel Pierre Lorson, Vert le Petit, and Bernard Roger Dumas, Vert le Grand, both of France, assignors to Societe Nationale des Poudres et Explosifs, France
Division of Ser. No. 422,728, Dec. 7, 1973, abandoned. This application Dec. 11, 1975, Ser. No. 639,930
Claims priority, application France, Dec. 19, 1972, 72.45154
Int. Cl.² C06B *45/10*
U.S. Cl. 149—19.9 **2 Claims**

1. A solid component for a hybrid propellant, which comprises
1. a solid amine which is 2,4-diamino-toluene, 2,6-diamino-toluene, or melamine, and
2. an organic liquid binder, said binder comprising functional groups capable of being cross-linked by an agent containing a cross-linking grouping selected from the group consisting of epoxide and aziridinyl groupings, being capable of hardening at a temperature lower than the melting point of said amine, said binder being a member selected from the group consisting of carboxytelechelate polybutadienes, carboxytelechelate polybutadiene/styrene copolymers, carboxytelechelate polybutadiene/acrylonitrile copolymers and mixtures thereof with a liquid organic polyacid,

the proportion of said binder being more than 15% by weight, based on the solid component.

4,065,333
FACING SHEET EDGE TRIMMING
John L. Lawlis, Roby; Bernard L. Rodgers, Rotan, both of Tex., and Daniel A. Winkowski, Tonawanda, N.Y., assignors to National Gypsum Company, Buffalo, N.Y.
Filed Mar. 31, 1977, Ser. No. 783,155
Int. Cl.² B32B *30/04, 31/00;* **B24B** *1/00*
U.S. Cl. 156—40 **5 Claims**

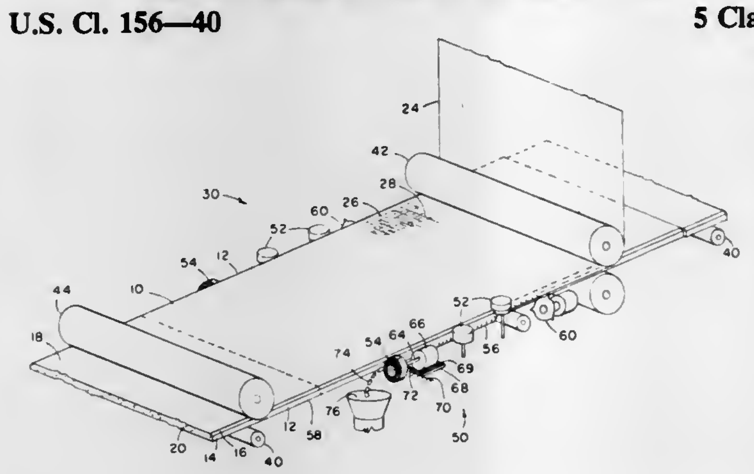

1. The method of making a plastic sheet covered wallboard with the plastic sheet extending uniformly from on one side edge of said wallboard across the face of said wallboard to onto the opposite side edge of said wallboard comprising the steps of laminating a thin plastic sheet onto the entire front face of a wallboard with side portions of said plastic sheet on each side having a width greater than the thickness of said wallboard at the edges, folding said plastic sheet side portions and adhering said plastic sheet side portions to the two side edges of said wallboard with an excess portion of said plastic sheet extending beyond the edge back corner on each side edge of said wallboard, trimming said excess portion from said plastic sheet covered wallboard, said trimming comprising the steps of disposing a rotary abrader having flexible abrading elements extending radially outwardly adjacent said edge back corner and rotating said rotary abrader with said abrader periphery engaging said plastic sheet at said edge back corner with a motion relative to the board edge in a direction from the front face toward the back edge corner, abrading said plastic sheet with said abrader with sufficient force to penetrate said plastic sheet, and moving said wallboard relative to said rotary abrader to provide said abrading action progressively along the full length of said edge back corner, whereby said abrading severs said excess portion from said wallboard.

4,065,334
FUR AND HIDES IN THE FINE ARTS
Clifton Clay, 11215 Itasca, Cleveland, Ohio 44106
Filed Dec. 30, 1975, Ser. No. 645,434
Int. Cl.² C14B *1/02*
U.S. Cl. 156—68 **3 Claims**

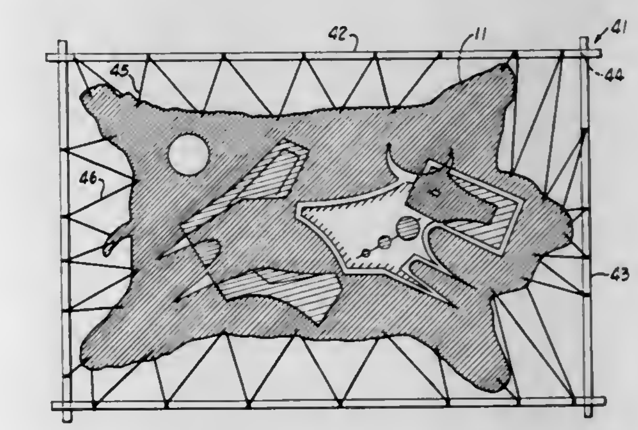

1. The method of producing a skin painting of desired design which comprises the steps of:
stapling a buffalo hide to a vertical surface,
applying heat to hairs in selected areas of the hide to embrittle the hair thereon,
utilizing a cutting tool with a curved edge varying progressively in curvature for enabling precisely varying and selected outlined segments to be formed at the margin of bare skin and hair by carving away the embrittled hairs from a selected area of the hide to form a bare surface area along outlines to form boundaries of selected portions of the desired design,
applying acrylic pigment to the bare surface area in simple geometrical configurations such as triangles, circles and rectangles to form portions of the painting within such boundaries to produce a composite picture of applied pigment and hair retained on the skin, the configuration of boundaries being along lines representing tribal designs,
cutting a stiff backing sheet with an outline following the outline of the hide,
gluing the hide to the backing sheet,
surrounding the hide with wooden frame members,
piercing holes in the hide and backing sheet along the outline thereof,
driving horseshoe nails into the frame members at points spaced from the pierced holes in the hide and backing sheet,
passing a thong through the holes and looping the thongs around the horseshoe nails to mount the hide within the frame members, whereby a mounted tribal painting is produced from natural hides and protected from drying out, the boundaries between hair and portions of the hide from which hair has been removed being either carved away from elements of the design or carved into it so that

either acrylic paints or hair remaining on the hide will form the desired element of the design.

4,065,335
PROCESS FOR MANUFACTURING A XEROGRAPHIC TONER CARTRIDGE

Maxwell Aaron Pollack, Morris Plains, N.J., assignor to Van Dyk Research Corporation, Whippany, N.J.
Continuation of Ser. No. 599,676, July 28, 1975, abandoned, which is a division of Ser. No. 489,694, July 18, 1974, Pat. No. 3,999,654, which is a continuation of Ser. No. 314,542, Dec. 13, 1972, abandoned. This application Sept. 13, 1976, Ser. No. 722,776
Int. Cl.² B29C *27/10;* **C09J** *5/00*
U.S. Cl. 156—69 **4 Claims**

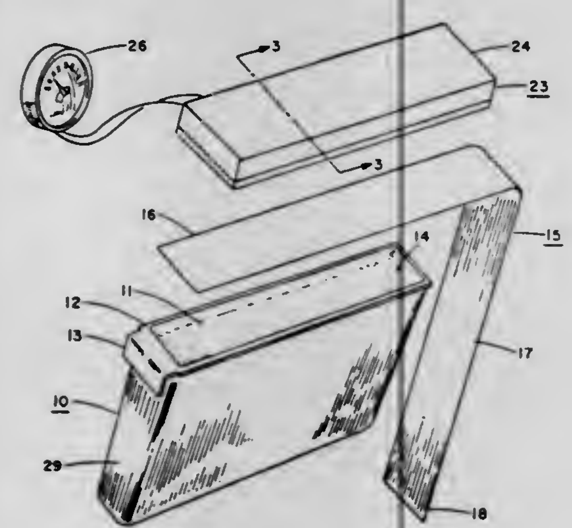

1. A process for manufacturing a xerographic toner cartridge, comprising the steps of:
providing a toner container having a bottom, two side walls, two end walls and an elongated surface opening therein opposite said bottom, with a peripheral lip surrounding said opening;
filling said container with a heat-fusible xerographic toner powder;
positioning an elongated smooth-surfaced flexible tongue comprising a tear-resistant material having non-directional shear strength characteristics adjacent said lip so that said tongue covers said opening, said material comprising a sheet structure including a multiplicity of randomly oriented and bonded fibers, the length of said tongue being greater than twice the length of said opening, said tongue having a sealing portion covering said opening and an adjacent tab portion having a length greater than that of said sealing portion, said tongue having a thickness on the order of 1 to 10 mils;
disposing a heat-activatable thermoplastic adhesive layer between said peripheral lip and the sealing portion of said tongue, said adhesive when activated being more strongly adherent to said peripheral lip than to the sealing portion of said tongue, so that both surfaces of any part of said sealing portion later peeled from said lip will be free of said adhesive, said layer having a thickness on the order of 0.05 to 2 mils;
providing a platen having a circumferential ridge dimensioned to conform to the size and shape of the peripheral lip of said toner container;
heating said platen to, and maintaining said platen at a predetermined operating temperature;
contacting said tongue with the circumferential ridge of said heated platen to press said tongue against said lip for a time sufficiently long to soften said thermoplastic adhesive so that upon rehardening the thermoplastic adhesive forms a secure adhesive bond between said lip and the adjacent part of the sealing portion of said tongue to prevent the escape of toner powder from said container, the temperature and time associated with said contacting step providing insufficient heat transfer to cause fusing deterioration of the toner powder within said container; and
folding said tongue at the junction of the sealing and tab portions thereof to dispose said tab portion adjacent said sealing portion with the free end of said tab portion protruding beyond said lip adjacent one of said container walls, the shear strength of said tongue along said fold being at least 85 percent of the shear strength of portions of said tongue remote from said fold,
said tongue comprising a material having a shear strength in any direction substantially greater than the peel strength of said activated adhesive bond between said sealing portion of said tongue and said peripheral lip.

4,065,336
METHOD OF MAKING A WALL SECTION FOR A THERMAL ENCLOSURE

Hale Conklin, Santa Ana, Calif., assignor to Divajex, Santa Ana, Calif.
Division of Ser. No. 608,182, Aug. 27, 1975, Pat. No. 4,019,340. This application Oct. 14, 1976, Ser. No. 732,515
Int. Cl.² B65B *7/00*
U.S. Cl. 156—69 **11 Claims**

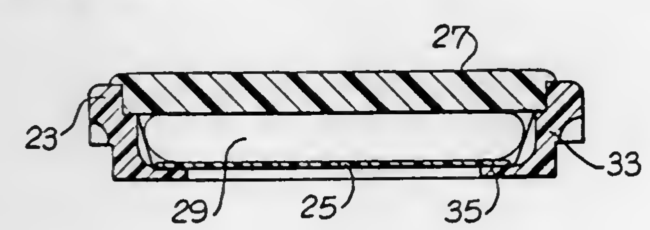

1. A method of making a unitary wall section for at least partly closing an opening in a thermal enclosure wherein the thermal enclosure has surface means adjacent the opening, comprising:
providing a frame having inner and outer ends, a passage extending into said frame in a generally axial direction from said outer end toward said inner end, a peripheral wall, a ledge extending radially inwardly from the peripheral wall with said ledge being axially inwardly of said outer end, and surface means adapted to engage the surface means of the thermal enclosure;
passing a member through said passage from said outer end of said frame to said ledge with an edge portion of said member being supported by said ledge and with said member forming an inner wall of the wall section;
providing a substance for adding or removing heat;
inserting the substance into said passage from said outer end of said frame and depositing the substance on said inner wall; and
closing said passage adjacent the outer end of said frame to provide a unitary wall section which can be placed as a unit on the thermal enclosure with the surface means of the frame in engagement with the surface means of the thermal enclosure to at least partly close said opening.

4,065,337
MOLDING PROCESS

Hobart L. Alter, Capistrano Beach, and Peter L. V. Hutchinson, Laguna Beach, both of Calif., assignors to Coast Catamaran Corporation, San Juan Capistrano, Calif.
Filed Apr. 18, 1973, Ser. No. 352,753
Int. Cl.² B32B *5/18*
U.S. Cl. 156—78 **5 Claims**

1. A process for making a boat hull, said process including the steps of:
forming a main body shell and a complementary deck shell, said shells initially being separated;
applying a heat-activated adhesive to the interior surfaces of said shells while said shells are separated;

providing a rigid nest for each of said shells having the configuration of the exterior of said main body shell and said deck shell;
positioning the formed main body and deck shells within their respective nests;
providing a steam chest for each of said shells having the exterior configuration of the interior of said main body shell and said deck shell;
complementarily interfitting said steam chests within their respective shells, the exterior of said steam chests being spaced from the interior of said shells;
depositing a heat-expandable synthetic plastic foam within the space between each steam chest and its respective shell;
heating said plastic foam to cause it to expand and fuse at a

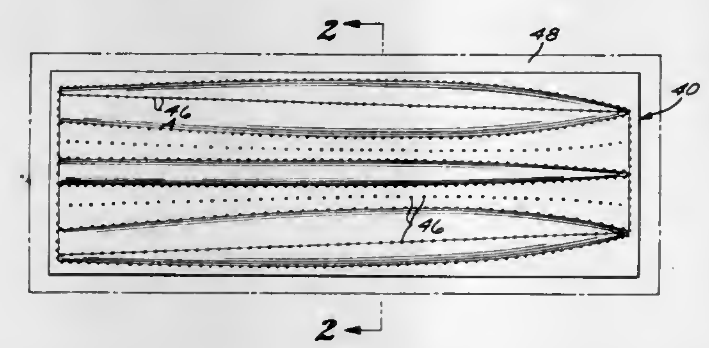

temperature that activates said adhesive, the expansion of said foam confining such shells within the space between each steam chest and its respective nest to thereby prevent the roughening of such shells by the expanding foam, such foam expansion also smoothing out any roughness present in the shells before expansion of the foam;
positioning non-skid material between said deck nest and said formed deck shell before said foam is expanded whereby said non-skid material is contiguously embedded within the upper surface of said deck shell when the foam is expanded;
removing said shells and their adhered fused plastic foam from said nests; and
then joining said shells whereby said fused plastic foam rigidifies said shells and also provides flotation for the completed boat hull.

4,065,338
RAW PNEUMATIC TIRE CARCASS AND METHOD OF FABRICATING SAME

Henri J. Mirtain, Compiegne, France, assignor to Uniroyal, Clairoix, France
Division of Ser. No. 509,523, Sept. 28, 1974, Pat. No. 3,948,304. This application Nov. 3, 1975, Ser. No. 628,453
Claims priority, application France, Oct. 5, 1973, 73.35763
Int. Cl.² B29H *17/02*
U.S. Cl. 156—123 R **3 Claims**

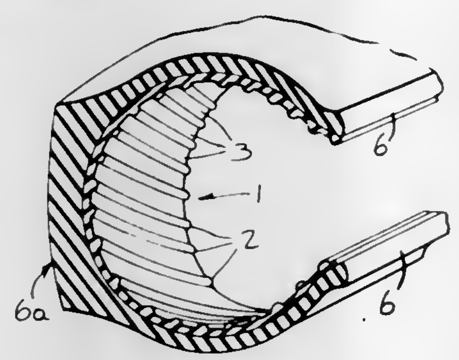

1. A method of fabricating a pnuematic tire, comprising:
a. forming an elastomeric, bead-reinforced, annular body;
b. forming an air-impervious, symmetrically convex, elastomeric liner for said body from a thermoplastic material so as to be coextensive with said body from bead-to-bead and present a convex surface that is thickest along the medial region of said liner;
c. forming on said convex surface of said liner an array of recesses each communicating one edge of said liner with a second edge;
d. superposing said liner co-extensively upon and affixing it to an internal surface of said body such that said liner recesses are exposed and said convex surface is annularly symmetrical;
e. inflating and vulcanizing said body and liner together by engaging a smooth surface of an inflatable medium with said convex surface in a heated mold;
f. venting fluid from between said liner and said inflatable medium via said recesses; and
g. treating an deforming the surface of said liner in which are presented said recesses such that the latter gradually disappear to merge smoothly with the remainder of said surface and present respective spaced striation marks evidencing their previously recessed condition and said convex liner is rearranged into a uniformly thick liner from bead-to-bead of said body concomitantly with said steps of inflation, vulcanization and fluid-venting.

4,065,339
PROCESS FOR PRODUCING FIBRE REINFORCED PLASTIC TUBES WITH FLANGES

Axel Lippert; Siegfried Joisten, and Johannes-Otto Sajben, all of Krefeld, Germany, assignors to Bayer Aktiengesellschaft, Leverkusen, Germany
Division of Ser. No. 324,043, Jan. 16, 1973, Pat. No. 3,920,049. This application Oct. 8, 1975, Ser. No. 620,894
Claims priority, application Germany, Jan. 18, 1972, 2202125
Int. Cl.² B32B *1/10;* **B05D** *3/12*
U.S. Cl. 156—149 **6 Claims**

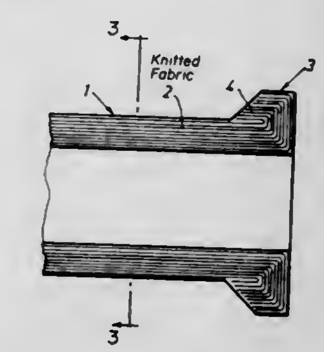

1. In a process for producing fibre-reinforced plastic tubes, wherein a fabric tube is continuously knitted and coated with a duroplastic material in free-flowing form, and the duroplastic material is subsequently hardened, the improvement for providing the tubes with flanges, which comprises halting the application of duroplastic material to the knitted tube for a period of time in which a piece of knitted fabric sufficient for the production of two flanges is produced, cutting the uncoated piece of knitted fabric in the middle to provide two uncoated end portions of knitted fabric and forming a flange from each of said end portions by stretching each end portion radially outwardly, impregnating each stretched end portion with duroplastic material, and allowing the duroplastic material to harden.

4,065,340
COMPOSITE LAMINATION METHOD

George E. Dickerson, Yorktown, Va., assignor to The United States of America as represented by the National Aeronautics and Space Administration, Washington, D.C.
Filed Apr. 28, 1977, Ser. No. 792,067
Int. Cl.² B32B *31/06, 31/16*
U.S. Cl. 156—154 **11 Claims**

1. A process of preparing structural components of composite laminates comprising:

providing prepreg resin impregnated fiber tape material having the fibers therein running the length of the tape,
cutting the prepreg tape into a plurality of desired lengths,
stacking the plurality of lengths of tape in layers to a predetermined thickness while maintaining the same fiber orientation for each layer,
partially curing the stacked tape assembly into a unitary mass under vacuum for approximately ten minutes and at an elevated temperature of at least 350° F.,
cooling the partial cured mass and cutting it into a plurality of strips along the parallel orientation of the fibers,

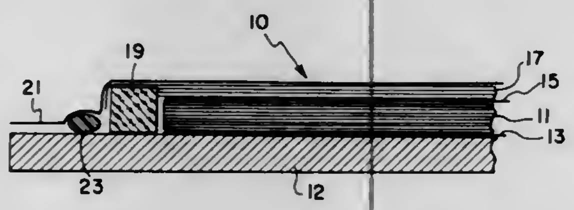

stacking this plurality of strips vertically in layers atop each other with two strips of uncured prepreg tape disposed between each of the plurality of laminate strips,
curing the stacked layer strips into a unitary structure under vacuum, pressure and an elevated temperature of at least 350° F. for least thirty minutes,
cooling the cured structure to a minimum of 150° F. while maintaining the pressure and vacuum, and after allowing to cool to room temperature,
machining the unitary structure formed into the final desired size and shape.

4,065,341
METHOD OF MAKING A LIQUID FILTER
Fritz Cub, Schwabach, Germany, assignor to Robert Bosch GmbH, Stuttgart, Germany
Filed Nov. 7, 1973, Ser. No. 413,634
Claims priority, application Germany, Nov. 21, 1972, 2256995
Int. Cl.² B65H *81/00*
U.S. Cl. 156—187 **7 Claims**

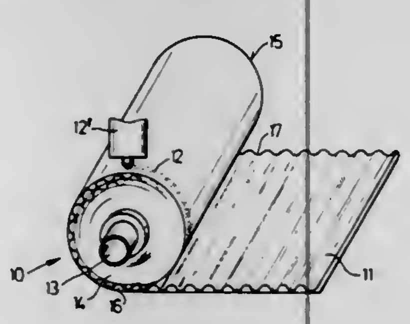

1. A method of making a liquid filter having a filtering roll which is fastened to a housing part, is itself made of a spiral of filtering material wound on a central tubular member, and is to be axially traversed by a liquid to be filtered, the method comprising, in combination:
a. providing a spiral roll of filtering material on a central tubular member,
b. providing a housing member into which said roll is to be placed, said housing member defining an outer edge,
c. laying a first bead of thermoplastic material having a given softening point on an outer surface of said roll at least around the circumference of said roll in the vicinity of an end thereof,
d. pressing with cooled forming jaws said first bead in a warm state to an outside diameter larger than the inside diameter of said housing member,
e. inserting the roll partly into the housing member so that the first bead engages the outer edge of the housing member,
f. heating said housing member to raise its temperature above said given softening point of said thermoplastic material to soften said first bead on its circumference during further insertion of the roll into said housing member and, thereafter
g. cooling said housing member to solidify said thermoplastic material;
whereby a liquid filter is formed upon solidification of said thermoplastic material which acts as a glue and constitutes a tight, rigid connection between the housing member and the roll of filtering material.

4,065,342
METHOD AND APPARATUS FOR PRODUCING SYNTHETIC RESIN TUBE
Mikio Kobayashi, Takatsuki, and Isamu Nakano, Toyonaka, both of Japan, assignors to Sekisui Kagaku Kogyo Kabushiki Kaisha, Osaka, Japan
Division of Ser. No. 544,665, Jan. 27, 1975, Pat. No. 4,009,069. This application Nov. 11, 1976, Ser. No. 741,129
Claims priority, application Japan, Jan. 28, 1974, 49-12089; Apr. 16, 1974, 49-42871
Int. Cl.² B29D *23/10*
U.S. Cl. 156—203 **7 Claims**

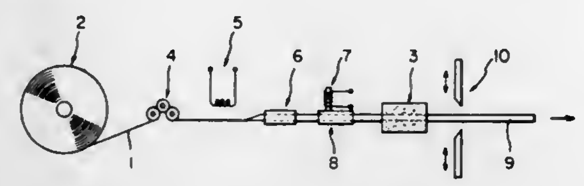

1. A method for producing a synthetic resin tube comprising the steps of transporting a strip of synthetic resin in its longitudinal direction, deforming the strip into a tubular shape having an axis extending in the longitudinal direction of the strip and at the same time bringing both lateral surfaces of the strip into pressing contact with each other to join said surfaces while passing the strip through a restricted space during transport, characterized in that the diameter of the restricted sapce is adjustable in accordance with the variation of the transverse dimension of the strip in its longitudinal direction by utilizing the internal stress of the strip passing therethrough.

4,065,343
LABEL SYSTEM FOR PACKAGE AND BAGGAGE HANDLING
Warren R. Stumpe, Glendale, Wis., assignor to Rexnord Inc., Milwaukee, Wis.
Continuation of Ser. No. 632,023, Nov. 14, 1975, abandoned. This application Dec. 13, 1976, Ser. No. 750,343
Int. Cl.² B29C *17/08;* B65C *11/02*
U.S. Cl. 156—212 **9 Claims**

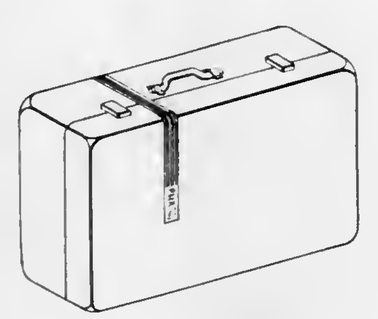

1. A method of handling and identifying articles such as luggage, packages, or the like, said method comprising the steps of:
a. printing both man-readable and machine-readable characters conveying information concerning each article on one side of a strap segment the other side of which is at least partially coated with an adhesive adapted to allow the strap segment to be temporarily affixed to the article and subsequently to be removed in its entirety without leaving marks on the article and
b. affixing each strap segment to the article so that the characters appear on three sides of the article, whereby the characters can be read regardless of whether the article is standing up or has fallen over on one of its two principal sides,
wherein one set of the man-readable characters is printed so that the characters are oriented in one direction with respect to the length of the strap segment, thereby being readable by a person standing on one side of the article, and another set of the man-readale characters is printed so that the characters are oriented at 180° to the first set of characters, thereby being readable by a person standing on the other side of the article, whereby the information concerning each article can be conveniently read regardless of the orientation which the article assumes during handling.

4,065,344
BAG FORMING METHOD AND APPARATUS
Herman C. Weist, Louisville, Ky., assignor to Weist Industries Inc., Louisville, Ky.
Filed June 25, 1975, Ser. No. 590,298
Int. Cl.² B31B *23/14, 23/60, 49/04*
U.S. Cl. 156—250 **5 Claims**

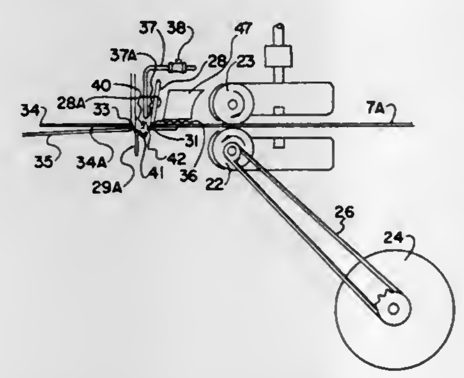

1. A bag forming apparatus including:
a. Feed means to selectively feed a substantially continuous elongate web of flattened tubular plastic stock material in a direction parallel to the longitudinal axis of the web;
b. Heat seal means extending across a portion of said web in a direction generally transverse to the direction of travel of the web to selectively fuse opposite sides of said web to form the bottom of a first bag;
c. First control means to selectively cause said heat seal means to contact said web to fuse said opposing sides of said web together along a line generally transverse to the direction of travel of said web to form a bottom of a first bag;
d. Feed means to move said web a selected distance along the direction of travel after the bottom of said first bag is formed;
e. Cutter means disposed a selected distance from said heat seal means in the direction of travel of said web along a line generally transverse to the direction of travel of the stock to release said first bag and form an opening thereto;
f. Second control means to selectively activate said cutter means to cut said web while said heat seal means is in position to form a bottom of a second bag;
g. Tear means to selectively exert a force on a tail portion of said web between said cutter means and said heat seal means to remove said tail portion of said web between said cutter means and said heat seal means while said heat seal means is in contact with said web; and
h. Cooler means disposed before said heat seal means relative to the direction of travel of said web to cool said web prior to introduction of said web to said heat seal means.

4. A method for formation of a plastic bag including:
a. feeding a substantially continuous elongate web of flattened tubular plastic stock material in a direction parallel to the longitudinal axis of the web;
b. fusing a portion of the upper and lower layers of said web along a line generally transverse to the direction of travel of the web to form a bottom of a first bag;
c. advancing said web a selected distance in the direction of travel thereof;
d. cutting the web along a line generally transverse to the direction of travel of the said web at a location a selected distance from the bottom of said first bag to form an open end of said first bag and generally simultaneously forming a heat seal transversely across a portion of said web a selected distance from said cut to form a bottom end of a second bag;
e. while fusing the upper and lower layers of said bottom of said second bag, exerting a force on a tail portion of said web between said bottom end of said second bag and said cut of said web to remove said tail portion from said web;
f. cooling the portion of said web to be fused prior to fusing said upper and lower layers.

4,065,345
POLYIMIDE ADHESIVES
Donald J. Progar, Grafton; Vernon L. Bell, Seaford, and Terry L. St. Clair, Poquoson, all of Va., assignors to The United States of America as represented by the United States National Aeronautics and Space Administration, Washington, D.C.
Continuation-in-part of Ser. No. 532,784, Dec. 16, 1974, abandoned. This application Oct. 22, 1976, Ser. No. 734,901
Int. Cl.² C08K *5/06;* C08L *79/08;* C09J *3/00, 5/06*
U.S. Cl. 156—309 **6 Claims**

1. A method for preparing an adhesive solution comprising:
reacting an aromatic dianhydride with an approximately equimolar quantity of an aromatic diamine,
the reactants being previously dissolved in a liquid selected from the group consisting of 1,2-dimethoxyethane, bis(2-methoxyethyl)ether, 1,2,bis(2-methoxyethoxy)ethane and bis-[2-(2-methoxyethoxy) ethyl]ether.

4,065,346
ROTER THIN-FILM EVAPORATOR
Ivan Frolovich Evkin, bulvar Matrosa Zheleznyaka, 9a, kv. 78; Vladimir Alexandrovich Petrov, Tovarischesky pereulok, 17, kv. 16; Viktor Markovich Olevsky, Leningradsky prospekt, 75a, kv. 91; Vitaly Rafael-Abovich Ruchinsky, Prospekt Mira, 202, kv. 21; Vladimir Semenovich Bushev, Balaklavsky prospekt, 4, korpus 3, kv. 206, and Valentin Alexeevich Tatyanchikov, Universitetsky prospekt, 4, kv. 296, all of Moscow, U.S.S.R.
Filed Nov. 26, 1975, Ser. No. 635,771
Int. Cl.² B01D *1/22*
U.S. Cl. 159—6 R **6 Claims**

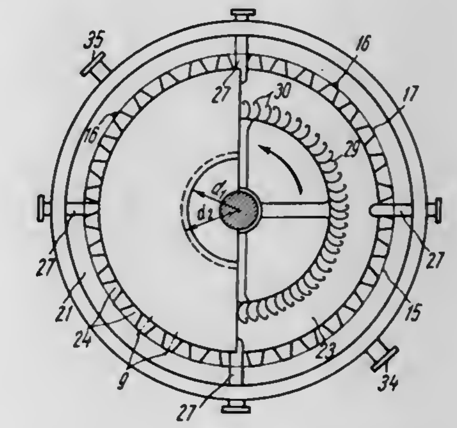

1. A rotor thin-film evaporator comprising: a cylindrical casing with an inner heat-exchange surface; heating jackets mounted outside the casing; a rotor including a shaft; a plurality of crimped drums arranged successively along said shaft;

bosses rigidly secured to said shaft, each of said crimped drums being secured to said bosses; each of said drums having peripheral surfaces with perforations therein for ejecting liquid fed to the crimps of said drums to the heat-exchange surface of said casing whereat steam is generated by vaporization of some of said liquid; an annular clearance being provided between the outer surface of each of the drums and the heat-exchange surface of the casing; means for uniformly distributing inlet liquid over the inner surface of the crimp bulges of the uppermost drum comprising a plate secured to the shaft of said rotor and covering the interior space of the drum from the top such that the steam is constrained to pass through said annular clearance; means for uniformly distributing liquid received from the uppermost drum successively to the inner surface of the crimp bulges of each of the lower drums; means for separating liquid drops from the stream of steam and liquid coming from said annular clearance at said uppermost drum comprising a section disposed between adjoining drums and including blades extending vertically and radially and having curvilinear cross-sections with vertical outer edges bent inwardly for discharge of separated liquid from the blades to said means for distributing the liquid to the inner surface of the crimp bulges of the lower drum while directing steam separated from liquid into the drum cavity.

4,065,347
METHOD OF PRODUCING FLUFFED PULP
Sven Ulrik Torbjörn Åberg, and Sven Gunnar Bergdahl, both of Molnlycke, Sweden, assignors to Molnlycke AB, Goteborg, Sweden
Filed Feb. 20, 1976, Ser. No. 659,919
Claims priority, application Sweden, Feb. 26, 1975, 7502156
Int. Cl.² D21B *1/06;* D21F *11/14*
U.S. Cl. 162—26 **7 Claims**

1. Method of producing fluffed pulp, characterized in that wood is defibrated and thereafter dried with warm air to a dry content of 80 -95% by weight without resorting to wet pulping or mechanical compression, thereby to produce a fluffed pulp comprising an unwashed mechanical pulp having a liquid diffusing capacity of at least 3.5 grams liquid per gram pulp and minute, a bulk of at least 18 cm³/gram and a volume weight in blocks or bales of at most 0.8 g/cm³.

4,065,348
METHOD AND APPARATUS FOR DETECTING AND CONTROLLING THE CAUSTIC IN PAPER PULP BLEACHING
William E. Zimmerman, Covington, Va., assignor to Westvaco Corporation, New York, N.Y.
Continuation-in-part of Ser. No. 570,666, April 23, 1975, abandoned. This application May 14, 1976, Ser. No. 686,305
Int. Cl.² D21C *7/12*
U.S. Cl. 162—49 **12 Claims**

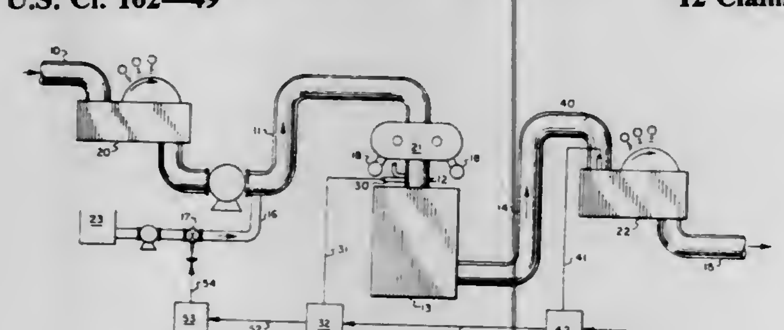

1. A method of detecting the concentration of residual caustic in solution with an aqueous slurry of paper pulp, said method comprising the steps of:

A. Providing a slurry of wood fiber in an aqueous solution comprising chlorine and caustic within a ferrometallic container for said slurry;
B. Immersing a metallic material probe within said slurry as one pole of an electrolytic cell, said metallic material having a different tendency to ionize in said solution that iron and a consistent voltaic response to caustic concentration in said solution over a caustic residual concentration range of substantially 0.0 to 100.0 grams of caustic measured as sodium oxide per 100 liters of solution and an alkalinity range of substantially 7.0 to 11.0 pH;
C. Measuring between said probe and said container the electromotive force generated by the combination of said probe, said container and said slurry;
D. Correlating said electromotive force measurement to the concentration of residual, unreacted caustic in said solution as a function thereof.

9. An apparatus for regulating the flow of caustic compound into solution with a chlorinated aqueous slurry of paper pulp comprising:

A. A ferro-metallic conduit for a flow stream of said slurry;
B. A conduit for delivering a caustic compound into solution with said slurry flow stream at an injection point and at a rate sufficient to maintain within said solution a caustic residual concentration within the range of 0 to 100 grams of caustic measured as sodium oxide per 100 liters of solution and an alkalinity range of 7 to 11 pH.
C. Means for heating the causticized slurry above 170° F;
D. A first electrolytic cell means comprising said heated, causticized slurry as an electrolyte, said ferro-metallic conduit as a first cell pole and a second cell pole of metallic material having a different tendency to ionize in said causticized slurry than iron and also a consistent voltaic response in said heated, causticized slurry over said entire residual concentration and alkalinity range;
E. Means for measuring the voltaic response of said first cell to changes in caustic residual concentration within said heated, causticized slurry;
F. First signal means for generating a first signal porportional to said voltaic response of said first cell;
G. Flow stream retention means for retaining said causticized slurry as a reactive system for at least 30 minutes following said caustic injection;
H. A second electrolytic cell means comprising said causticized slurry at a flow point subsequent to said retention means as an electrolyte, said ferro-metallic conduit as a first cell pole and a second cell pole of metallic material having a different tendency to ionize in said causticized slurry than iron and also a consistent voltaic response to said causticized slurry over said entire residual concentration and alkalinity range;
I. Means for measuring the voltaic response of said second cell to changes in caustic residual concentration within said causticized slurry;
J. Second signal means for generating a second signal proportional to said voltaic response of said second cell;
K. Means to compare said second signal to a setpoint reference signal to derive a first error signal;
L. Means to compare said first signal to said first error signal to derive a second error signal; and,
M. Means to control the flow rate of caustic into said flowing slurry as a function of said second error signal.

4,065,349
PAPER SIZING PROCESS
Mark E. Bateman, Woodridge, and Jeffrey T. Palmer, Roselle, both of Ill., assignors to Standard Oil Company (Indiana), Chicago, Ill.
Filed Feb. 28, 1977, Ser. No. 772,917
Int. Cl.² D21D *3/00*
U.S. Cl. 162—158 **17 Claims**

1. A paper sizing process comprising (1) adding a sizing composition of a cationic retention aid and a monoester of a benzene carboxylic acid anhydride having from 6 to 60 carbon atoms in the ester group in a sizing amount to an aqueous pulp suspension or paper stock prior to web formation, (2) forming the web, and (3) heating said sized paper web at a temperature of from 80° to 150° C.

4,065,350
VERTICALLY STABILIZED ELONGATED CROSS-SECTION TOKAMAK
George V. Sheffield, Hopewell, N.J., assignor to The United States Government as represented by the Department of Energy, Washington, D.C.
Filed July 9, 1974, Ser. No. 486,926
Int. Cl.² G21B *1/02;* H01J *7/14*
U.S. Cl. 176—3 **5 Claims**

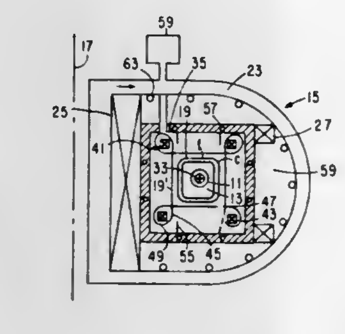

1. In the method of confining and stabilizing a plasma current carrying toroidal plasma column in a tokamak having toroidal and poloidal coil means for producing toroidal magnetic surfaces along an equilibrium axis around an axis of rotation, the improvement, comprising the steps of:

a. producing a toroidal plasma column in the magnetic surfaces; and
b. distributing over the plasma region a non-helical octupole magnetic field around the outside of the plasma column and in the space between the equilibrium axis and the axis of rotation for producing poloidal separatrices external to the plasma column having stagnation points and magnetic field lines that define in cross-section an elongated magnetic surface having a D-shaped poloidal divertor cross-section,

said toroidal plasma column having external shell currents computed to make the edge of the plasma region the $\Psi = 0$ magnetic surface.

4,065,351
PARTICLE BEAM INJECTION SYSTEM
Daniel L. Jassby, and Russell M. Kulsrud, both of Princeton, N.J., assignors to The United States of America as represented by the United States Energy Research and Development Administration, Washington, D.C.
Filed Mar. 25, 1976, Ser. No. 670,480
Int. Cl.² G21B *1/02;* H01J *7/14*
U.S. Cl. 176—5 **10 Claims**

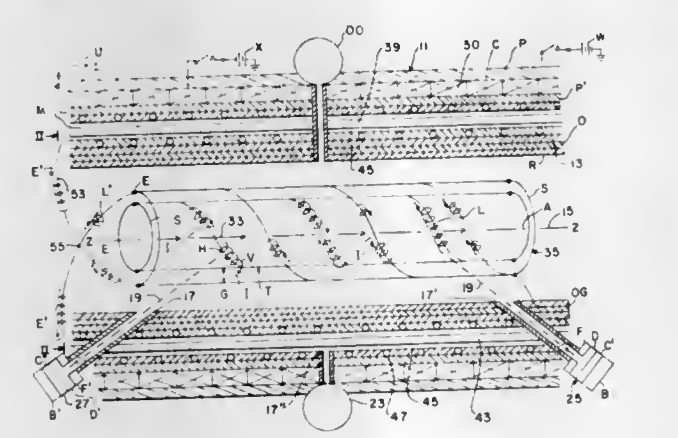

2. Method for injecting charges particles into a tokamak confining magnetic field, comprising:

a. Magnetically confining a neutral, toroidal plasma column of ions and electrons having a thermal temperature, density, volume, average thermal energy and average confinement time along an endless magnetic axis in a tokamak vacuum container means containing a toroidal magnetic field having concentric magnetic field lines of force forming a magnetic container that is concentric with the magnetic axis and capable of confining the plasma for a sufficient period of time to produce a thermal ion diffusion loss rate and a thermal electron diffusion loss rate;
b. injecting ordered, neutral, atomic beams having fast ordered ions and orbital electrons at densities that are directed into the confined plasma with trajectories that are generally tangent to the magnetic field lines and azimithally along the magnetic axis in the same and the opposite direction to the direction of the magnetic axis at an energy that is greater than the average thermal energy of the confined plasma, the neutral beams interacting with the confined thermal plasma ions to inject fast ions and thermal electrons into the plasma, the fast ions forming oppositely circulating, counterstreaming ion beams having directed, distinctly ordered, ion velocity distributions and associated beam currents that are oppositely displaced in velocity along the magnetic axis, the latter ion beams injecting thermal ions into the confined plasma due to the slowing down of the ion beams in the confined plasma;
c. the magnetic confinement maintaining the aforesaid thermal electron injection in balance with the thermal electron diffusion to maintain a thermal electron density in the confined plasma;
d. the magnetic confinement of the plasma also maintaining the directedness of the counterstreaming ion beams until the ions therein slow down to the average thermal energy of the confined plasma; and
e. removing the diffusing thermal electrons and the ions that slow down to the average thermal energy of the confined plasma, said removal being at least as fast as the average time it takes for the thermal ions to slow down to the average thermal energy of the confined plasma so as to maintain a high counterstreaming ion number density in the counterstreaming ion beams that is at least as great as the confined thermal ion density, said removal also maintaining the sum of the aforesaid counterstreaming ion number density and the confined thermal ion density substantially in balance with the confined electron density in the confined plasma so that the counterstreaming ion beams continuously produce a large number of head-on collisions between the counterstreaming ions all along the magnetic axis.

4,065,352
NUCLEAR FUEL ELEMENT
Yoshihiko Iwano, and Katsumi Une, both of Yokohama, Japan, assignors to Tokyo Shibaura Electric Co., Ltd., Kawasaki, Japan
Filed June 9, 1976, Ser. No. 694,381
Claims priority, application Japan, June 13, 1975, 50-70748
Int. Cl.² G21C *3/02*
U.S. Cl. 176—68 **3 Claims**

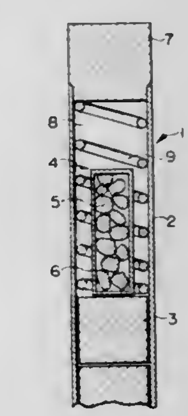

1. In a nuclear fuel element constructed by sealing nuclear fuel material in a cladding tube, the improvement which comprises a hydrogen getter formed of hydrogen-absorbing metal material enclosed in a hydrogen-permeable metal member which does not allow the passage of water, oxygen and other gases fitted into the cladding tube, whereby the hydrogen-

absorbing metal material is prevented from having the surface coated with a protective film.

4,065,353

METHOD FOR THE PREPARATION OF D-CARBAMYL AMINOACIDS AND THE CORRESPONDING D-AMINOACIDS

Francesco Cecere; Giuliano Galli; Gino Della Penna, all of Monterotondo, and Bruno Rappuoli, Rome, all of Italy, assignors to Snamprogetti, S.p.A., Milan, Italy

Filed May 11, 1976, Ser. No. 685,318

Int. Cl.[2] C12D *13/06*

U.S. Cl. 195—2 **4 Claims**

1. A method for the preparation of D-carbamyl aminoacids comprising the steps of subjecting to enzymatic hydrolysis in the presence of a hydropyrimidine hydrolase and a racemic mixture of compounds having the formula:

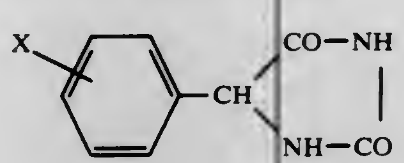

wherein X represents —OH, hydrocarbon radicals, halogen, alkoxyl, $—NO_2$, carboxyls, at a pH between 8 and 9.

4,065,354

LYSOZYME CONJUGATES FOR ENZYME IMMUNOASSAYS

Edwin F. Ullman, Atherton, and Kenneth E. Rubenstein, Menlo Park, both of Calif., assignors to Syva Company, Palo Alto, Calif.

Continuation-in-part of Ser. No. 513,662, Oct. 10, 1974, Pat. No. 3,905,871, and Ser. No. 481,022, June 20, 1974, abandoned, each is a continuation-in-part of Ser. No. 143,609, May 14, 1971, abandoned. This application Sept. 19, 1975, Ser. No. 615,152

The portion of the term of this patent subsequent to Sept. 16, 1992, has been disclaimed.

Int. Cl.[2] G01N *31/14;* **C07G** *7/02*

U.S. Cl. 195—63 **12 Claims**

1. An enzyme conjugate of lysozyme of the formula:

$$\text{LYS}\,(X—R—Y)_n$$

wherein:

LYS intends lysozyme;

n is the average number of groups bonded to the LYS and is in the range of 1 to 5;

X is a bond or non-oxocarbonyl, including the nitrogen and sulfur analogs thereof;

R is a linking group of from 1 to 12 carbon atoms and 0 to 3 heteroatoms which are oxygen, sulfur or nitrogen; and

Y is a hapten of at least 125 molecular weight and not greater than about 1,200 molecular weight.

4,065,355

PURIFICATION OF DEOXYRIBONUCLEASE

Boen Tie Khouw, Islington, and Johan Peter Kesler, Rexdale, both of Canada, assignors to Canada Packers Limited, Toronto, Canada

Continuation of Ser. No. 561,921, March 25, 1975, abandoned. This application Oct. 8, 1976, Ser. No. 730,739

Int. Cl.[2] C07G *7/02, 7/026*

U.S. Cl. 195—66 R **5 Claims**

1. A process for the preparation of purified deoxyribonuclease from an impure source material thereof comprising, dissolving an impure deoxyribonuclease material in a buffer solution having a pH between about 3.5 and 9.0 and containing calcium ions, clarifying the resulting solution, applying the clarified solution to a column consisting essentially of concanavalin A chemically bound to agarose, the purity of the deoxyribonuclease in said solution being sufficiently high that there is substantial adsorption of deoxyribonuclease on the column, washing said column with buffer solution to remove impurities more loosely bound than deoxyribonuclease, eluting the adsorbed deoxyribonuclease from the column by contacting it with a carbohydrate solution, and recovering a purified deoxyribonuclease from said carbohydrate solution.

4,065,356

PRODUCTION OF ANTIBIOTIC FR-02A (EFROTOMYCIN) BY STREPTOMYCES LACTAMDURANS

William M. Maiese, Bridgewater, and Richard G. Wax, Matawan, both of N.J., assignors to Merck & Co., Inc., Rahway, N.J.

Division of Ser. No. 657,512, Feb. 12, 1976, Pat. No. 4,024,251, which is a continuation-in-part of Ser. No. 496,457, Aug. 13, 1974, abandoned, which is a continuation-in-part of Ser. No. 436,425, Jan. 25, 1974, abandoned, which is a continuation-in-part of Ser. No. 410,067, Oct. 26, 1973, abandoned. This application Mar. 1, 1977, Ser. No. 773,245

Int. Cl.[2] C12D *9/14*

U.S. Cl. 195—80 R **11 Claims**

1. A method of producing antibiotic FR-02A which comprises cultivating the microorganism *Streptomyces lactamdurans* NRRL 3802 in a fermentation broth containing a nutrient sodium composed of assimilable sources of carbohydrate, nitrogen, and inorganic salts wherein the nutrient medium contains between about 1% and 6% by weight of carbohydrate and between about 0.2% and 6% by weight of available nitrogen under aerobic conditions at a temperature in the range of from about 26° C. to 30° C. for a period of from about two to five days wherein in the pH of the aqueous nutrient medium is in the range of from about 6.0 to 8.0 and extracting the whole broth with a water immiscible polar organic solvent selected from the group consisting of methyl formate, ethyl formate, methyl acetate, ethyl acetate, n-butyl acetate, isobutyl acetate, ethyl propionate, cyclohexanone, chloroform, methylene chloride, carbon tetrachloride, ethylene dichloride, 1-chloro-2,2-dimethylpropane, tetrachloroethylene, and bromoform to obtain the antibiotic FR-02A.

4,065,357

DETECTION OF CATALASE-CONTAINING BACTERIA

James N. Groves, Schenectady, N.Y., assignor to General Electric Company, Schenectady, N.Y.

Continuation of Ser. No. 434,999, Jan. 21, 1974, abandoned, which is a division of Ser. No. 886,283, Dec. 18, 1969, Pat. No. 3,838,034, which is a continuation-in-part of Ser. No. 723,179. April 22, 1968, abandoned. This application Nov. 17, 1975, Ser. No. 632,483

Int. Cl.[2] G01N *31/14*

U.S. Cl. 195—103.5 R **4 Claims**

1. A process for the clinical detection of the catalase activity in catalasa-containing cells in body fluid by dynamic monitoring of oxygen gas produced by the catalase-peroxide reaction comprising the steps of:

a. secruing a quantity of body fluid of unknown catalase content,

b. introducing a predetermined volume of said body fluid into a non-expandable reaction volume separated by an oxygen permeable membrane from electrochemical measuring means, said electrochemical measuring means being in association with said oxygen permeable membrane said means being totally outside said closed reaction volume, said membrane being impermeable to hydrogen peroxide and having an oxygen permeability coefficient of at least about 5×10^{-11} gms./atmos.-cm.-sec.,

c. introducing a predetermined quantity of hydrogen peroxide solution into said reaction volume such that the volumes of said body fluid and hydrogen peroxide solution completely fill said reaction volume and such that the resulting solution has a hydrogen peroxide concentration in the range of from 0.01 to 1 mole per liter of said resulting solution, closing said reaction volume and

d. electrochemically measuring the increase of partial pressure of oxygen in said reaction volume by measuring the extent of diffusion of oxygen through said membrane, said extent of diffusion of oxygen through said membrane being linearly proportional to said partial pressure of oxygen in said reaction volume.

4,065,358

APPARATUS FOR PRODUCING REACTIONS IN COLORIMETRIC CELLS

Shoji Kawai; Kenichi Nishimura, both of Kyoto, and Mitsuo Fukuda, Ibaragi, all of Japan, assignors to Kabushiki Kaisha Kyoto Daiichi Kagaku, Japan

Filed May 10, 1976, Ser. No. 684,918

Claims priority, application Japan, May 17, 1975, 50-58847

Int. Cl.[2] C12K *1/10*

U.S. Cl. 195—127 **15 Claims**

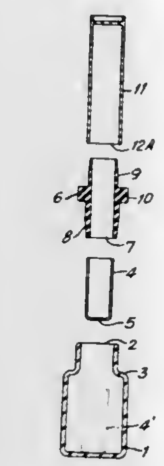

1. In an apparatus for determining a property of a given sample, an outer container having an open top, an inner container also having an open top and being small enough to be received entirely within the outer container with both of said open tops directed upwardly and with the open top of said inner container being situated substantially below the open top of said outer container, a tubular colorimetric cell having opposed ends one of which is closed and the other of which is open, and tubular connecting means having opposed open ends and an unobstructed, completely open internal tubular passage extending from one to the other of said open ends and having an internal cross sectional area which is too small to receive said inner container, said tubular connecting means being removably connected with said open top of said outer container and said open end of said cell for fluid-tightly connecting said cell to said outer container with the interior of said cell communicating with the interiors of said containers so that when a sample and reagent are respectively situated in the interiors of said containers in an amount according to which the inner container when situated within the outer container will extend above the level of the contents of said outer container, said connecting means can fluid-tightly connect said cell to said outer container to enable both containers and said cell to be inverted as a unit for discharging the contents of both containers into said cell to mix therein and provide a reaction according to which a property of said sample may be measured in an instrument.

4,065,359

CELL REMOVING DEVICE

William M. Hurni, North Wales, Pa., assignor to Merck & Co., Inc., Rahway, N.J.

Continuation of Ser. No. 573,712, May 1, 1975, abandoned. This application July 6, 1976, Ser. No. 702,819

Int. Cl.[2] C12K *9/00, 1/10*

U.S. Cl. 195—127 **13 Claims**

1. Apparatus for removing cells from cell culture apparatus having a plurality of discs mounted on a central shaft, the cell removing apparatus comprising a substantially shaft-like member having mounted thereon substantially perpendicularly to the axis of the shaft-like member a plurality of spaced apart contacting members, each contacting member adapted to contact at least part of the surface of a disc, each contacting member having two arms, each arm attached separately to the shaft-like member, the arms being joined a distance removed from the shaft-like member whereby the contacting member is

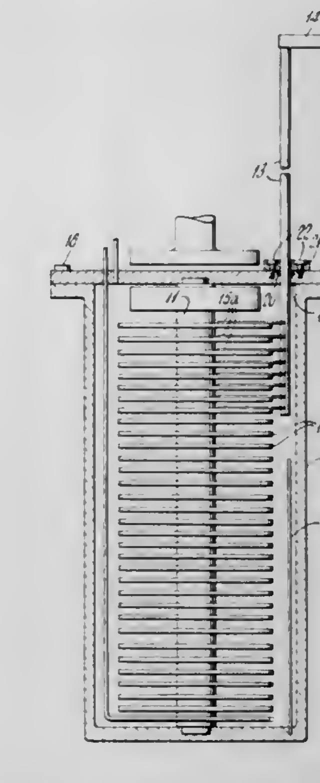

substantially triangular in shape having its base at about the shaft-like member and its apex a distance removed from the shaft-like member, and each contacting member being moved directly upon rotation of the shaft-like member.

9. A method of physically removing cells from a disc on which the cells have been cultured comprising the step of positioning a contacting member described in claim 1 on at least part of the surface of the disc and rotating the contacting member and the disc relative to each other.

4,065,360

CULTURING SYRINGE DEVICE

Robert J. Kreb, III, Rolling Road, Skillman, N.J. 08558

Continuation-in-part of Ser. No. 678,851, April 21, 1976. This application July 30, 1976, Ser. No. 710,769

Int. Cl.[2] C12K *1/04*

U.S. Cl. 195—139 **8 Claims**

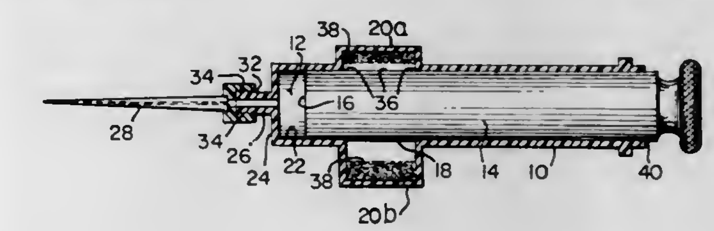

1. A culturing syringe device for withdrawing the fluid to be cultured directly into a sterile sealed culturing environment comprising:

a. a hollow housing defining a syringe chamber therein;

b. at least one closed culturing cavity defined in the lateral walls of said housing to be selectively openable into said syringe chamber, each said closed cavity having culturing media therein;

c. a movable piston located within the syringe chamber and adapted for longitudinal sliding movement therein, said piston including a head area and a peripheral area, said peripheral area providing a sealing means to selectively seal hermetically said closed culturing cavities from said syringe chamber and from the ambient environment;

d. hollow nipple means in one end of said housing providing fluid flow communication between said housing and the external environment; and

e. hollow needle means detachably affixed to said nipple means to allow fluid flow communication with the external environment.

4,065,361

APPARATUS AND SYSTEM FOR PROCESSING OIL SHALE

Lester Hanson, 1903 Princeton Ave., Salt Lake City, Utah 84108

Filed Sept. 10, 1976, Ser. No. 721,946

Int. Cl.² C10G *1/02*

U.S. Cl. 196—98 **7 Claims**

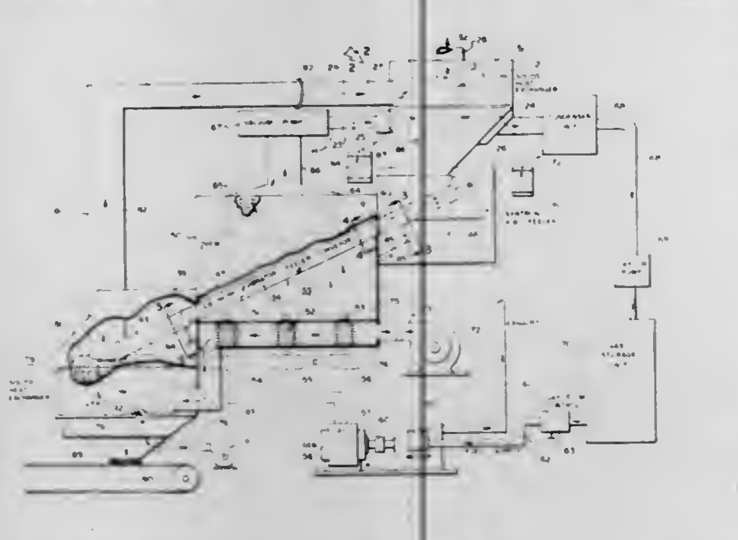

1. Oil shale processing apparatus including, in combination, a microwave oven having a continuous throughput conveyor passing through said oven and provided with a feed and a discharge end, said conveyor ends being disposed on opposite sides of and exterior with respect to said oven, first means coupled to said oven for applying a negative pressure therein said for withdrawing vapors and gases from the interior of said oven, an input hopper, first and second heat exchanger means disposed between said hopper and said conveyor feed end, said first heat exchanger being coupled to said first means for preheating incoming oil shale ore by said withdrawn vapors and gases as said oil shale passes from said hopper through said first heat exchanger means to said conveyor feed end, said second heat exchanger means being proximate to and operably separate from said first heat exchanger means to additionally preheat said incoming oil shale, a spent-shale heat exchanger disposed underneath said discharge end of the conveyor for heating air with spent shale, an air blower in communication with said spent-shale heat exchanger, conduit means for airflow coupling said spent-shale heat exchanger to said second heat exchanger means, and third means for recovering said withdrawn vapors and gases coupled to said first means subsequent to said first heat exchanger means.

4,065,362

PURIFICATION OF ORGANIC ISOCYANATES

Yushin Kataoka; Tetsuo Harada, and Kenji Takagi, all of Niihama, Japan, assignors to Sumitomo Bayer Urethane Co., Ltd., Japan

Filed June 2, 1975, Ser. No. 582,803

Claims priority, application Japan, June 4, 1974, 49-63592

Int. Cl.² B01D *3/34*

U.S. Cl. 203—58 **21 Claims**

1. A process for purifying an organic isocyanate which comprises heating an organic isocyanate in admixture with at least one treating agent selected from the group consisting of a metal salt of mercaptobenzothiazol, a metal salt of alkyl substituted dithiocarbamic acid, an alkyl substituted phenol, a thiobis-phenol, and a triaryl phosphite at a temperature not lower than 100° C. to thereby convert coloring impurities to tar and subsequently distilling the thusly treated mixture to recover a purified organic isocyanate.

4,065,363

PROCESS FOR THE ELECTROMETRIC MEASUREMENT OF CYANIDE IONS IN SOLUTIONS CONTAINING METAL IONS

Gunther Herrmann, Furth, Germany, assignor to Photocircuits Division of Kollmorgen Corporation, Hartford, Conn.

Filed Dec. 6, 1971, Ser. No. 205,297

Claims priority, application Germany, Dec. 17, 1970, 2064822

Int. Cl.² G01N *27/46*

U.S. Cl. 204—1 T **1 Claim**

1. A process for the determination of the cyanide ion content of a solution which comprises cyanide ions, a strong reducing agent, and a silver ion, said method comprising providing in said solution an amount of metal complexer in excess of that required to complex the silver ion; providing in contact with said solution a cyanide ion selective electrode that has connected thereto, direct reading potentiometric measurement means and, thereafter, determining from said direct reading potentiometric measurement means the cyanide ion concentration.

4,065,364

PROCESS FOR ANODIZING ALUMINUM

Howard A. Fromson, 15 Rogues Ridge Road, Weston, Conn. 06880

Filed Jan. 21, 1976, Ser. No. 651,018

Int. Cl.² C25D *11/04, 11/16*

U.S. Cl. 204—15 **4 Claims**

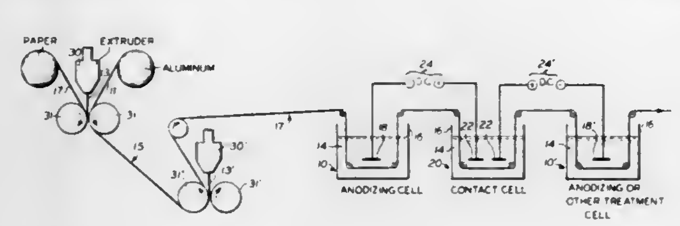

1. In a process wherein aluminum foil is anodically oxidized, the improvement which comprises bonding a member narrower than the aluminum foil to one side thereof, encapsulating said member by coating, prior to anodizing, the bonded side of the aluminum foil with a polymeric material which is inert to the anodizing conditions and thereafter electrolytically anodizing the uncoated side of said aluminum foil.

4,065,365

METHOD FOR IMPROVING FRICTIONAL SURFACE IN CYLINDERS OR SLEEVES OF INTERNAL COMBUSTION ENGINES

Juan Retolaza Ibarguengoitia, Bilbao, Spain, assignor to Aplicaciones Industriales de Cromo Duro, S.A., Bilbao, Spain

Continuation-in-part of Ser. No. 559,649, March 18, 1975, abandoned. This application Dec. 29, 1976, Ser. No. 755,602

Int. Cl.² C25D *7/04, 5/36, 5/50, 5/52*

U.S. Cl. 204—25 **10 Claims**

1. A method for preparing a chromium plated surface which comprises machining a metal base material to a smooth finish of up to 10 micro-inches CLA, chromium plating the machined surface, heat treating the chromium plated surface at a temperature between 150° and 325° C for 1 to 3 hours, cooling the heated surface in air, honing the cooled surface to remove irregularities from said surface, and lapping or blasting the honed surface with abrasive grit to obtain a surface finish between 25 and 50 micro-inches CLA.

2. A method according to claim 1, wherein the chromium plated surface is a chromium plated cylinder or sleeve suitable for use in an internal combustion engine.

4,065,366

PROCESS FOR PRODUCING ALKALI METAL HYDROXIDE

Yoshio Oda; Manabu Suhara, and Eiji Endo, all of Yokohama, Japan, assignors to Asahi Glass Co., Ltd., Tokyo, Japan

Filed Sept. 29, 1976, Ser. No. 728,017

Claims priority, application Japan, Oct. 17, 1975, 50-124275

Int. Cl.² C25B *1/16, 1/26, 13/08*

U.S. Cl. 204—98 **10 Claims**

1. In a process for producing an alkali metal hydroxide which comprises electrolysis of an aqueous solution of an alkali metal chloride in an electrolytic cell having an anode compartment and a cathode compartment which are partitioned by a fluorinated cation exchange membrane, the improvement which comprises a fluorinated cation exchange membrane made of a fluorinated copolymer having carboxylic acid groups as the ion exchange group and having an ion exchange capacity of 0.5 to 2.0 meq/g dry polymer and concentration of carboxylic acid groups of 8 to 30 meq/g water absorbed by the membrane when contacted with an aqueous solution of the alkali metal hydroxide having aout the same concentration of alkali metal hydroxide as that of catholyte during said electrolysis.

4,065,367

METHOD OF OPERATING AN ELECTROLYSIS CELL

Vittorio de Nora, Nassau, Bahamas, assignor to Oronzio de Nora Impianti Elettrochimici, S.p.A., Milan, Italy

Division of Ser. No. 530,012, Dec. 5, 1974, Pat. No. 3,976,556. This application Apr. 28, 1976, Ser. No. 681,145

Int. Cl.² C25B *1/16, 1/26*

U.S. Cl. 204—98 **11 Claims**

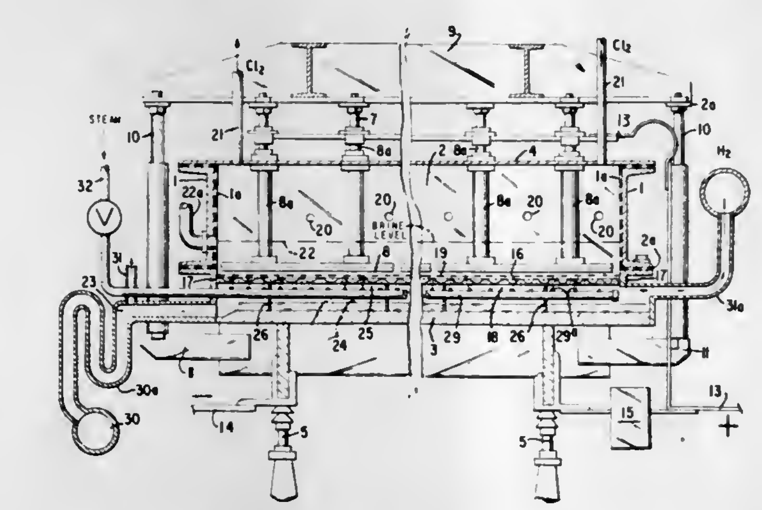

1. The method of reducing the caustic film concentration on the cathode side of the diaphragms of electrolysis cells having an anode compartment, a cathode compartment, an anolyte in the anode compartment, a catholyte in the cathode compartment, a diaphragm separating said compartments, screen anodes and cathodes in said compartments, and means to conduct an electrolysis current to said anodes and from said cathodes, which comprises maintaining a volume of anolyte in the anode compartment larger than the volume of anolyte in the gap between the anode and cathode, circulating anolyte through said screen anodes and out of said cells, passing an electrolysis current between said anodes and cathodes, introducing steam into the cathode compartment, maintaining the anode compartment below the condensation temperature of the steam in the cathode compartment under steady state operation throughout the electrolysis process by said circulation, condensing steam on the cathode side of the diaphragms, dripping the condensate and the caustic film removed from the cathode side of the diaphragms into the bottom of the cathode compartment and recovering the catholyte liquor.

4,065,368

PRINTED CIRCUIT COVER COATING COMPRISING AN ULTRAVIOLET RADIATION SENSITIVE ACRYLIC RESIN

Kenneth Allan Holtzman, Clifton, N.J., assignor to Bell Telephone Laboratories, Incorporated, Murray Hill, N.J.

Filed Feb. 23, 1976, Ser. No. 660,473

Int. Cl.² C08F *2/46;* **C08L** *91/00*

U.S. Cl. 204—159.23 **8 Claims**

1. Method for the preparation of photopolymerizable acrylic resin which comprises the steps of:

a. esterifying castor oil with chlorendic anhydride in the presence of an amine catalyst at a temperature within the range of 120°–150° C for a time period ranging from 16–2 hours, the lower temperatures corresponding with the longer reaction times and the converse, so yielding a chlorendic anhydride half ester,

b. admixing the resultant ester with a cure retardant, from 5 to 20 parts per 100 parts of resin of an acrylic functional monomer selected from the group consisting of methyl acrylate, butyl acrylate, ethyl hexyl methacrylate, alkyl acrylate, and methyl methacrylate, and a reagent having acrylic functionality, selected from the group consisting of glycidyl acrylate, glycidyl methacrylate and a mixture of glycidyl methacrylate and butyl glycidyl ether, said reagent being employed in an amount sufficient to assure that at least 50% of the carboxyl groups present in the ester system are reacted therewith, so yielding an acrylic ester, and

c. exposing the acrylic ester to a source of ultraviolet radiation for a time peroid sufficient to effect curing thereof.

4,065,369

ACTIVATED GAS REACTION APPARATUS & METHOD

Kazuyuki Ogawa; Masahiko Hirose, both of Yokohama; Masahiro Shibagaki, Hiratsuka; Yoshio Murakami, Yokohama, and Yasuhiro Horiike, Naritanishi, all of Japan, assignors to Tokyo Shibaura Electric Co., Ltd., Kawasaki, Japan

Filed July 15, 1976, Ser. No. 705,694

Claims priority, application Japan, July 18, 1975, 50-87235

Int. Cl.² B01K *1/00;* **H01T** *19/04*

U.S. Cl. 204—164 **10 Claims**

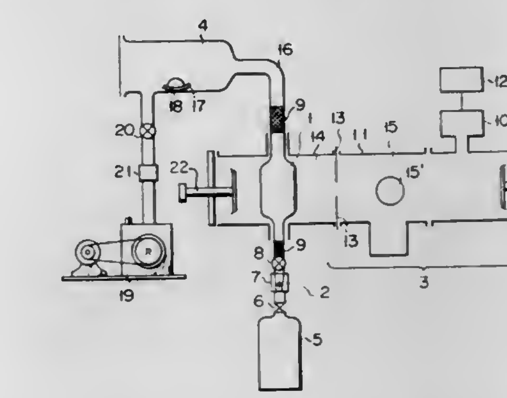

1. An activated gas reaction process comprising:

conducting feed gas to an activation chamber,

activating the feed gas in the activation chamber by applying microwave power to the feed gas from a microwave source under the conditions which satisfy the following formula:

$$2\pi fpl \geqq 4 \times 10^9$$

where:

f = frequency of microwaves in Hz,

p = gas pressure in the activation chamber in torr,

l = length of the activation chamber in cm. extending in the direction in which the electromagnetic field is provided by the microwave source,

conducting the activated gas delivered from the activation

chamber to a reaction chamber apart from the activation chamber and,

reacting the activated gas with a non-gaseous material in the reaction chamber.

5. An activated gas reaction apparatus which comprises:

an activation chamber;

a reaction chamber apart from said activation chamber;

feeding means for conducting feed gas to the activation chamber; and

microwave power-generating means for activating the feed gas in the activation chamber.

4,065,370

METHOD OF ION PLATING A THIN METALLIC STRIP FOR FLASHLAMP STARTING

Lowell Noble, Monte Sereno, and James T. Gaspar, San Jose, both of Calif., assignors to The United States of America as represented by the Secretary of the Army, Washington, D.C.

Continuation-in-part of Ser. No. 663,058, Nov. 18, 1975, abandoned. This application Jan. 28, 1977, Ser. No. 763,438

Int. Cl.² C23C *15/00*

U.S. Cl. 204—192 N **3 Claims**

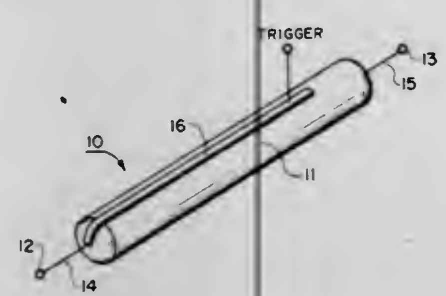

1. A method of insuring triggering of a laser flashlamp by application of an electrical impulse to an elongated metal strip permanently affixed to the outer surface of the quartz envelope of said flashlamp, comprising the steps of forming said metal strip by masking said flashlamp envelope to leave exposed an elongated region of said envelope, ion plating onto said exposed region of said envelope a thin layer of silver, and ion plating onto said plated layer of silver a thin layer of nickel.

4,065,371

ELECTROCHEMICAL CARBON METER

Douglas Noss Rodgers, San Jose, and Prodyot Roy, Saratoga, both of Calif., assignors to General Electric Company, San Jose, Calif.

Filed Sept. 26, 1975, Ser. No. 616,941

Int. Cl.² G01N *27/46*

U.S. Cl. 204—195 R **14 Claims**

1. An electrochemical meter for measuring the concentration of carbon within a fluid comprising:

a. a probe having attached at one end

b. a chamber to be placed within the fluid having the carbon concentration to be measured with the interior of said chamber being physically separate from said fluid and the wall of said chamber including a diffusion membrane transparent to any free carbon within said fluid;

c. a carbon activity gas within said chamber containing a plurality of carbon containing compounds which will react with any free carbon therein and equilibrate;

d. an electrochemical cell within said chamber being physically separate from said fluid, said electrochemical being capable of generating an electrical potential proportional to the amount of carbon activity in said carbon activity gas; and

e. fixing compound means in said chamber for maintaining a level of concentration of one of said carbon containing compounds in said carbon activity gas with any variations in such concentration depending only on the amount of free carbon in the gas whereby variations in the carbon activity in said gas are proportional to the amount of free

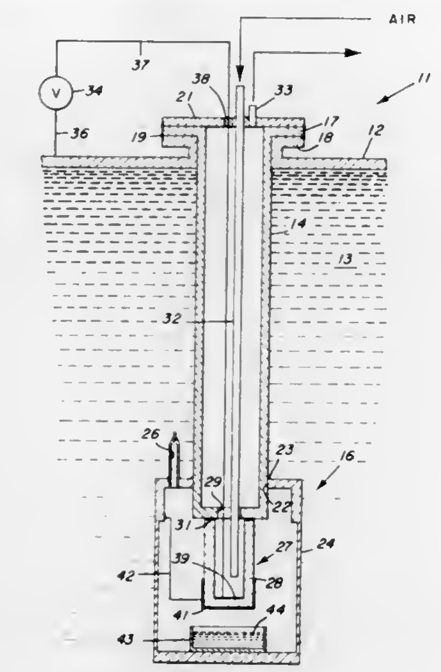

carbon diffusing into said carbon activity gas through said diffusion membrane.

4,065,372

ELECTROCHEMICAL OXYGEN SENSING ELEMENT, PARTICULARLY FOR DETERMINATION OF OXYGEN CONTENT IN THE EXHAUST GASES OF AUTOMOTIVE INTERNAL COMBUSTION ENGINES

Wolf-Dieter Hacker, Asperg; Karl-Hermann Friese, Leonberg; Leo Steinke, Waiblingen-Hegnach, and Helmut Weyl, Schwieberdingen, all of Germany, assignors to Robert Bosch GmbH, Stuttgart, Germany

Filed Oct. 27, 1976, Ser. No. 736,253

Claims priority, application Germany, Nov. 27, 1975, 2553292

Int. Cl.² G01N *27/46*

U.S. Cl. 204—195 S **11 Claims**

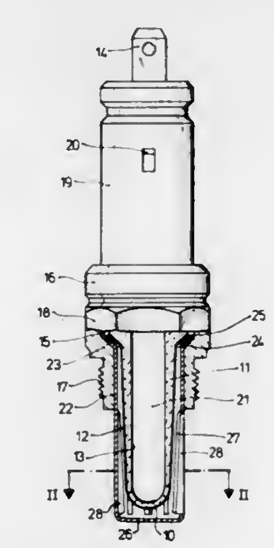

1. Electrochemical oxygen sensing element to determine the oxygen content in the exhaust gases from internal combustion engines having a housing (16, 17, 18, 19);

a solid electrolyte tube (11) having a first end closed at the bottom (10) and having an opposite end mounted in the housing and projecting therefrom, the solid electrolyte tube forming a solid ion conductive electrolyte oxygen concentration measuring element;

first electrode means (13) at the inside of the tube (11) extending into the region of the closed bottom thereof;

means (20) formed in the housing providing access of ambient air to the inside of the solid electrolyte tube (11) to establish an oxygen reference potential;

second electrode means (12) at the outside of the tube (11)

and forming a catalyzing layer, connected to a terminal of said element;

and a protective tube (22) surrounding the solid electrolyte tube, with clearance, and secured in the housing formed with opening therein to expose the outside of the tube (11) with said catalyzing layer (12) to the exhaust gases;

wherein, in accordance with the invention,

means are provided formed on the protective tube to establish a substantially uniform temperature gradient of the solid electrolyte tube, when said solid electrolyte tube is exposed to hot exhaust gases from the internal combustion engine including

said openings (27) formed in the protective tube (22) having an increase in cross-sectional free area

in the direction from the housing towards the bottom of the solid electrolyte tube, the largest open area of the openings (27) being approximately in the region of the closed region of the closed bottom (10) of the solid electrolyte tube (11) so that the area of said openings in the vicinity of the end of the tube in the housing has a smaller cross-section than the openings in the vicinity of the closed end.

4,065,373

HYDROGEN PATCH CELL

Richard L. Martin, Brentwood, and Eddie C. French, Manchester, both of Mo., assignors to Petrolite Corporation, St. Louis, Mo.

Filed Apr. 26, 1976, Ser. No. 680,024

Int. Cl.² G01N *27/46*

U.S. Cl. 204—195 C **17 Claims**

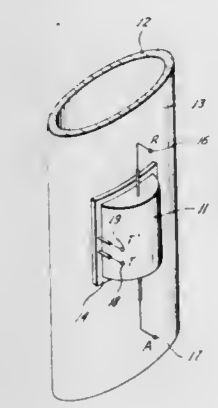

1. A hydrogen patch cell mountable on the diffusion side of a metallic wall being penetrated by hydrogen atoms, comprising:

a. a body formed of an insulating material, said body defining a cavity and having an open end portion adapted to conform to the surface configuration of a metallic wall, said cavity containing an electrolyte, said electrolyte providing an electrochemical environment for conversion of hydrogen atoms to hydrogen ions and said body being impervious to said electrolyte;

b. securing means associated with said body for holding said end portion in engagement with the metallic wall;

c. sealing means on said body for providing a peripheral fluid-tight seal between said end portion and said metallic wall;

d. a noncorroding metal barrier adjacent said open end portion, said barrier being interposable between said cavity and said wall and separated from said wall only by pliant coupling material which substantially fills all voids between said barrier and said wall, said barrier being permeable to hydrogen atoms but inert and impermeable with respect to said electrolyte contained in said cavity; and

e. electrode means carried internally by said body and extending externally for connection to external circuitry whereby electrochemical conversion of hydrogen atoms to hydrogen ions is produced in said electrolyte and hydrogen diffusion is determined.

4,065,374

METHOD AND APPARATUS FOR PLATING UNDER CONSTANT CURRENT DENSITY

Hiroshi Asami, and Masao Kaji, both of Otsu, Japan, assignors to New Nippon Electric Co., Ltd., Osaka, Japan

Filed Mar. 29, 1977, Ser. No. 782,417

Claims priority, application Japan, Aug. 10, 1976, 51-95872

Int. Cl.² C25B *15/02;* **C25D** *21/12*

U.S. Cl. 204—228 **8 Claims**

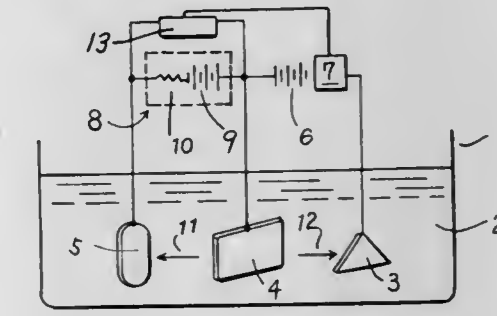

1. A plating apparatus comprising plating bath means for holding an electrolyte solution of uniform ionic concentration in said plating bath means, a common electrode plate, electrode support means for supporting articles to be plated and a standard or reference electrode, arranged relative to each other in said plating bath, first plating circuit means including a direct electric current source connected between said common electrode and said electrode means to be plated, said direct electric current source being able to supply a plating current of variable strength, second circuit means including constant direct current source means connected between said common electrode plate and said standard or reference electrode plate, resistance change detecting means operatively arranged to detect the change of electric resistance in the electrolyte solution between said common electrode plate and said standard or reference electrode plate in response to the change in the electric potential difference between said common electrode plate and said standard or reference electrode plate caused by the constant current which flows therethrough, and control circuit means operatively connected for regulating the plating current strength supplied by said direct electric current source in order to maintain a constant plating current density in response to the output of said detecting means.

4,065,375

APPARATUS FOR PROVIDING FLOW OF ELECTROLYTE THROUGH ELECTROLYTIC CELLS

Alan Frank Roy Newton, Portsmouth, England, assignor to Parel Societe Anonyme, Luxembourg, Luxembourg

Filed Nov. 13, 1975, Ser. No. 631,676

Claims priority, application United Kingdom, Nov. 13, 1974, 49184/74

Int. Cl.² C25B *15/08;* **C25D** *21/10, 17/00*

U.S. Cl. 204—237 **26 Claims**

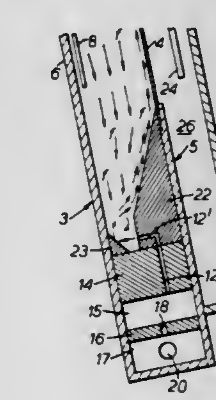

1. An electrode system comprising a vessel bounded by a first wall including an ion-permeable portion and by a second

wall opposite said first wall; a current feeder within said vessel spaced apart from said ion-permeable portion; and a plurality of electrically conductive particles free to move within a region between the current feeder and the ion-permeable portion and constituting, in use, a particulate electrode, said vessel incorporating at the base thereof a flow distributor means for discharging fluid into said vessel which comprises at least one channel debouching into the interior of the vessel, the end portion of each channel remote from the base of the cell being an outlet which is directed so as to discharge said fluid directly into said vessel from said outlet in a direction initially generally away from said ion-permeable portion and towards said second wall and in a direction so as to cause subsequent deflection of said fluid by said second wall or by a member attached to said second wall towards said ion-permeable portion and then upwardly in a direction substantially parallel to said ion-permeable portion.

4,065,376
ELECTROLYTIC CELL

Andrew Whyte; William A. Gallup, both of Painesville; Barry A. Schenker, Mayfield Heights, and Robert A. Schulz, Euclid, all of Ohio, assignors to Diamond Shamrock Corporation, Cleveland, Ohio
Filed May 4, 1976, Ser. No. 683,027
Int. Cl.² C25B *9/00, 13/00, 15/08*
U.S. Cl. 204—263 **6 Claims**

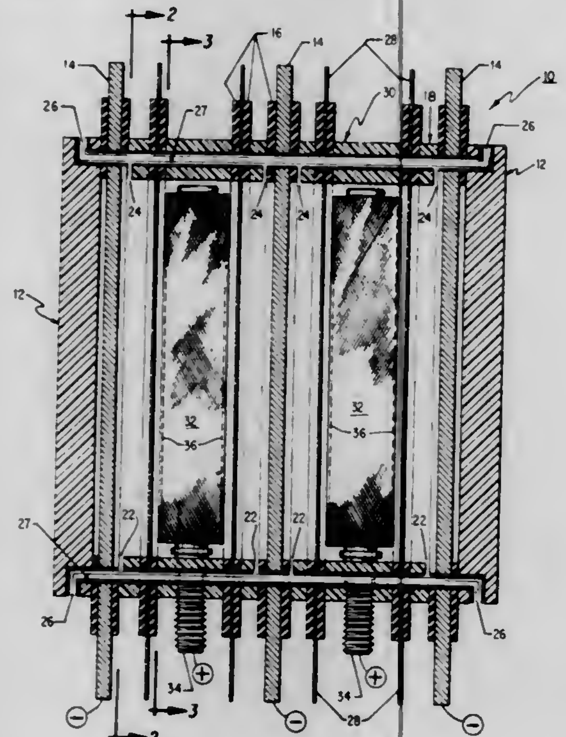

1. An electrolytic cell comprising: at least two end plates; a first electrode in sealing engagement with one of said end plates; a first electrode compartment frame in sealing engagement with said first electrode; at least two channels within opposing ends of said first electrode compartment frame of distribute an electrolyte solution evenly across said first electrode entire surface; slots milled transverse to the axis of each of said channels to provide further opening into the interior of said first electrode compartment frame to enhance the jetting action of the electrolyte across said first electrode; a planar separator in sealing engagement with said first electrode compartment; a second electrode compartment frame containing inlet and outlet ports for circulation of electrolyte solution and sealingly engaged with said planar separator; a second electrode element contained with the confines of said second electrode compartment frame; and means for impressing an electric current between said first electrode and said second electrode element.

4,065,377
METAL ANODE FOR ELECTROCHEMICAL PROCESSES

Christine Zollner, Schwaig near Nurnberg; Gerhard Thiele, Uttenreuth uber Erlangen; Dieter Zollner, Schwaig near Nurnberg, and Konrad Koziol, Rothenbach an der Pegnitz, all of Germany, assignors to C. Conradty Nurnberg GmbH & Co. KG, Germany
Continuation-in-part of Ser. No. 516,996, Oct. 22, 1974, Pat. No. 3,991,158. This application Nov. 1, 1976, Ser. No. 737,548
Int. Cl.² C25B *11/04;* **C25D** *17/00;* **C01G** *15/00*
U.S. Cl. 204—290 F **5 Claims**

1. In an anode for electrochemical processes which anode comprises a basis metal and a cover layer, the improvement wherein said cover layer comprises cardinal-red cubic face centered thallium palladate having the formula $TlPd_3O_4$.

4,065,378
MOUNTING MAGAZINE FOR A GALVANIC FIXTURE FOR ELECTROPLATING SEMICYLINDRICAL ARTICLES

Friedrich Sauer, Heidenrod, and Klaus Muller, Naurod, Taunus, both of Germany, assignors to Glyco-Metallwerke Daelen & Loos GmbH, Wiesbaden-Schierstein, Germany
Filed Nov. 17, 1975, Ser. No. 632,847
Int. Cl.² C25D *17/06, 17/08*
U.S. Cl. 204—297 W **8 Claims**

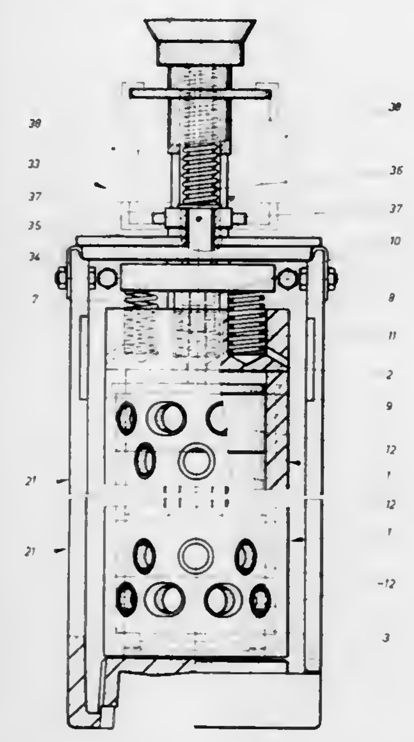

1. Apparatus for containing a stacked end to end column of semi-cylindrical articles during electroplating comprising a galvanic holding fixture adapted for mounting and providing electrical contact in a galvanic bath system and a magazine that is open along one side; said holding fixture comprising a fixture head, a fixture body connected at one end to said fixture head and adapted to be laid over the open side of said magazine, a platform at the other end of said body, and means for maintaining said magazine under longitudinal pressure between said head and said platform; and said magazine having a magazine body wall of electrically insulating material of generally half-cylindrical cross section formed with a multiplicity of openings located in staggered arrangement over the entire length and circumference of said magazine body wall for through flow of electrolyte, with opposite longitudinal side edges of said wall defining said open side of the magazine and being so disposed as to laterally support the column of semi-cylindrical articles by engagement with the outer convex surfaces of all of said articles, a bottom section supporting said column with said articles in said lateral engagement with said side edges and with the concave surfaces of said articles facing away from said longitudinal opening, and a head section having means providing electrical contact under longitudinal pressure to the other end of said column.

4,065,379
PROCESS FOR THE PRODUCTION OF NORMALLY GASEOUS OLEFINS

Homi D. Soonawala, and Steven E. den Broeder, both of The Hague, Netherlands, assignors to Shell Oil Company, Houston, Tex.
Filed Jan. 14, 1976, Ser. No. 648,983
Claims priority, application United Kingdom, Jan. 22, 1975, 2831/75
Int. Cl.² C07C *11/04;* **C10G** *13/06, 9/16*
U.S. Cl. 208—67 **11 Claims**

1. A process for the production of normally gaseous olefins from a petroleum residue, which comprises subjecting the petroleum residue to a thermal cracking treatment, recovering a gas oil fraction by distillation from the product of the thermal cracking treatment, catalytically hydrotreating at least a substantial part of the gas oil fraction, steam-cracking at least a substantial part of the hydrotreated product and recovering normally gaseous olefins from the effluent thus obtained.

4,065,380
HYDRODENITRIFICATION USING A TUNGSTEN CONTAINING NI-SMM COMPOSITE CATALYST

Harold E. Swift, Gibsonia, and Roger F. Vogel, Butler, both of Pa., assignors to Gulf Research & Development Company, Pittsburgh, Pa.
Filed Oct. 17, 1975, Ser. No. 623,377
Int. Cl.² C10G *23/02*
U.S. Cl. 208—89 **8 Claims**

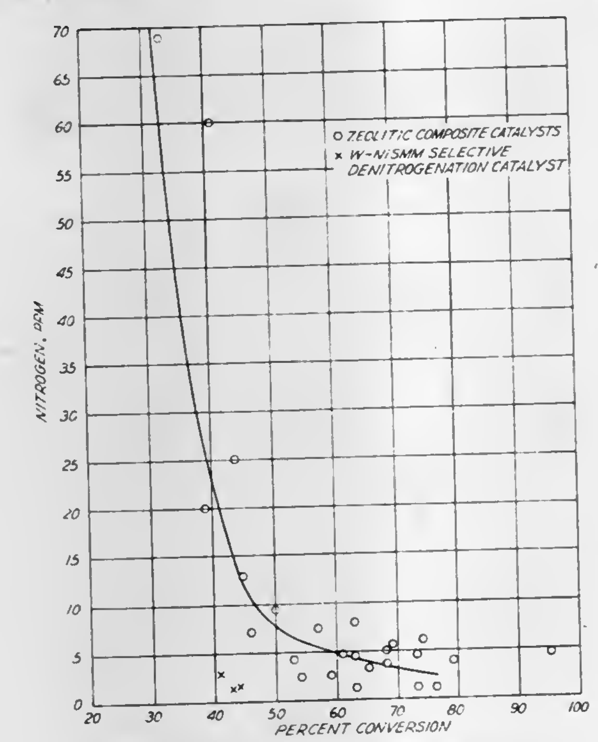

FIGURE—DENITROGENATION CURVE FOR Ni-SMM-HY COMPOSITE CATALYST, USING TUNGSTEN OR NICKEL TUNGSTEN. CURVE IS DRAWN THROUGH CIRCLES.

1. A process for the hydrodenitrification of a charge stock containing at least 350 ppm of organic nitrogen which comprises

contacting said charge stock under hydrodenitrification conditions including a temperature from 400° to 950° F. with a non-zeolitic catalyst consisting essentially of

i. from 60 to 92 weight percent of a laminar 2:1 layer-lattice aluminosilicate mineral possessing layer-lattice unit cells, each cell having an inherent negative charge balanced by cations exterior to said unit cell, said mineral corresponding to the following overall formula prior to drying and calcining:

$$[(Al_{4-ew}{}^{3+}Y_{3w}{}^{2+})^{VI}(Q_{8-x}{}^{4+}Al_x{}^{3+})^{IV}O_{20}(OH)_{4-f}F_f]\cdot[dC^y]$$

where Al is aluminum;

Y is selected from the class consisting of nickel, cobalt and mixtures thereof;

Q is at least 0.95 mol fraction silicon ions, the remainder consisting of tetravalent ions having an ionic radius not to exceed 0.65 A; and

F is fluorine;

C is at least one charge-balancing cation; and where e has a numerical value from 2 to 3 inclusive;

w has a numerical value from 0.01 to 2 inclusive, with the proviso that the quantity ew have a numerical value from 0.02 to 4 inclusive;

f has a value of 4 or less;

x has a numerical value from 0.05 to 2.0 inclusive;

y is the valence of the cation C;

d is the number of cations C where the product $dy = x + 3(e-2)w$;

and wherein said first bracket represents said layerlattice unit cell formulation and said second bracket represents said charge-balancing cations; and

ii. tungsten in the form of metal oxide or metal sulfide or a mixture thereof dispersed through said semicrystalline laminar 2:1 layer-lattice aluminosilicate mineral component in an amount from 5 to 30 weight percent of said catalyst, calculated as the metal;

to obtain a product containing less than 10 ppm of nitrogen and wherein less than 50 weight percent of said product boils at a temperature substantially below the boiling range of the charge stock.

4,065,381
MAINTAINING EFFECTIVE MOLAR RATIO OF HF TO METAL PENTAFLUORIDE IN A HYDROCARBON CONVERSION PROCESS

Geoffrey R. Say; William C. Baird, Jr., and Paul W. Kamienski, all of Baton Rouge, La., assignors to Exxon Research and Engineering Company, Linden, N.J.
Filed Dec. 29, 1976, Ser. No. 758,053
Int. Cl.² C07C *5/28, 9/00, 3/12;* **C10G** *35/06*
U.S. Cl. 208—134 **9 Claims**

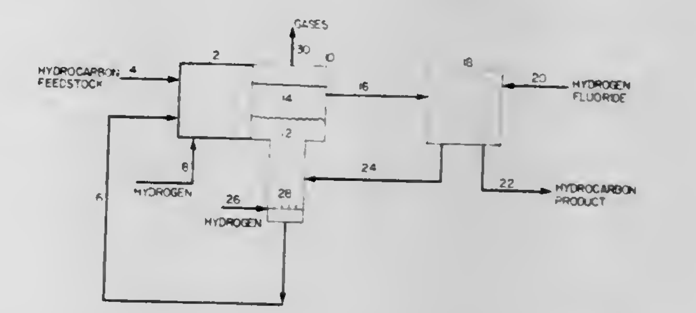

1. In a hydrocarbon conversion process which comprises

1. converting a hydrocarbon feedstock with a substantially liquid phase acid catalyst comprising (a) a metal pentafluoride selected from the group consisting of tantalum pentafluoride, niobium pentafluoride and mixtures thereof, and (b) hydrogen fluoride, such that the reaction effluent from said process is separated in a settling zone into a hydrocarbon phase containing minor amounts of metal pentafluoride and a catalyst phase;
2. removing at least a portion of the metal pentafluoride from the hydrocarbon phase by contact with a solvent comprising substantially anhydrous liquid hydrogen fluoride, thereby forming a hydrocarbon phase depleted in metal pentafluoride and an extract phase containing hydrogen fluoride and the metal pentafluoride thus removed, the molar ratio of hydrogen fluoride to metal pentafluoride in said extract phase being greater than that desired in said hydrocarbon conversion process, the improvement which comprises maintaining the molar ratio of hydrogen fluoride to metal pentafluoride in the extract phase at the level desired in said hydrocarbon conversion

process while inhibiting the deactivation of the catalyst phase by:

3. combining at least a portion of said extract phase with said catalyst phase in said settling zone to form a catalyst mixture and stripping said mixture with a gas containing molecular hydrogen for a time sufficient to reduce the molar ratio of hydrogen fluoride to metal pentafluoride in said catalyst mixture to the level desired in said hydrocarbon converting step (1); and
4. passing at least a portion of said stripped catalyst mixture from step (3) to said converting step (1).

4,065,382

MULTIPLE SCREEN APPARATUS

H. William Derrick, Jr., Williamsville, N.Y., assignor to Derrick Manufacturing Corporation, Buffalo, N.Y.

Filed June 16, 1976, Ser. No. 696,584

Int. Cl.^{2} B07B *1/28*

U.S. Cl. 209—313 6 Claims

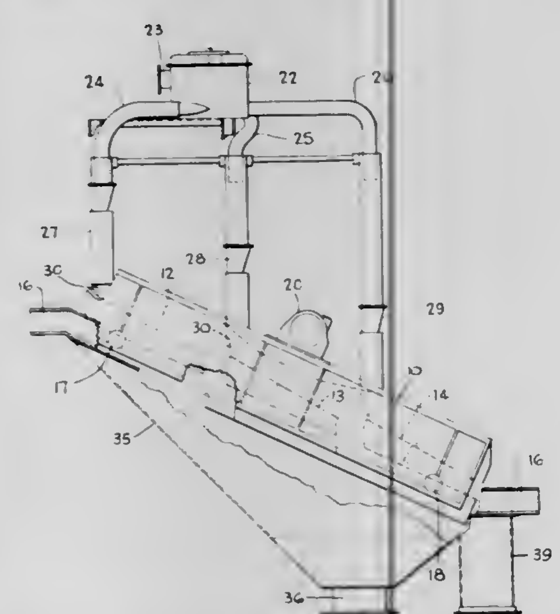

1. Screening apparatus comprising a plurality of screens in generally end-to-end relation but with spaces between the ends of adjacent screens whereby oversize material falls from corresponding ends of the several screens, means for depositing substantially uniform quantities of material to be screened at the opposite ends of the several screens, a funnel-like hopper beneath the several screens for receiving the undersize material which passes through the screens and converging the same to a common discharge conduit, a conduit for discharging oversize material from the several screens extending generally lengthwise of the apparatus beneath the screens, and guide means at the ends of the several screens for receiving oversize material falling therefrom for converging such material in a lateral direction and directing the same into said discharge conduit, said oversize material discharge conduit being substantially narrower than the width of said screens to permit the undersize material to fall past said conduit to said hopper.

4,065,383

PROCEDURE AND MEANS FOR COLLECTING LIQUID CONTAINING RADIOACTIVE TRACER ELEMENTS

Helge Skare, Heggtoppen, P.O. Box 8, 3401 Lierbyen, Norway, and Henry Hirschberg, Studentbyen pa Kringsja, Sognsveien 218, Oslo 8, both of Norway

Filed Apr. 1, 1976, Ser. No. 672,679

Claims priority, application Norway, Apr. 14, 1975, 751309

Int. Cl.^{2} B01D *15/00, 35/00*; G01N *33/16*

U.S. Cl. 210—27 7 Claims

1. A method for collecting a given amount of liquid containing radioactive tracer elements from a container which also contains solid particles, in particular biological tissue, without at the same time collecting such particles, comprising the steps of

immersing an actively absorbing surface of a liquid absorbent body in said amount of liquid,

said surface covered with a filter permeable to said liquid, but not to said particles,

completely absorbing said amount of liquid in the liquid absorbent body through said filter,

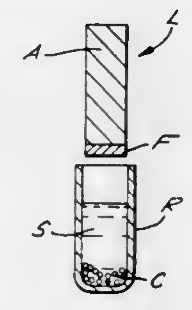

subseqently separating said filter from said actively absorbing surface, and

removing the absorbent body from the container after separation of the filter.

4,065,384

GRAFT THIN LAYER CHROMATOGRAPHY

Ramesh C. Pandey, Champaign, and Kenneth L. Rinehart, Jr., Urbana, both of Ill., assignors to University of Illinois Foundation, Urbana, Ill.

Filed Oct. 26, 1976, Ser. No. 735,759

Int. Cl.^{2} B01D *15/08*

U.S. Cl. 210—31 C 16 Claims

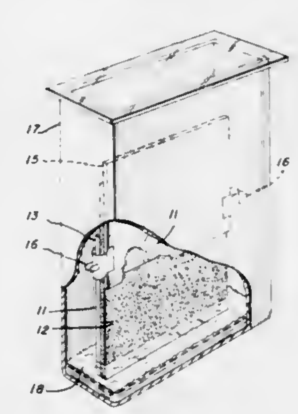

9. A TLC plate system for graft thin-layer chromatography comprising:

a. a pair of lap-joined plates each of which plates comprises a rectangular supporting surface and an adsorbent layer thereon coating about 50% to about 90% of the surface of the supporting plate, the uncoated surface comprising at least one strip of uniform width along an end of the supporting plate; and
b. clamping means for securing the plates at the lap-joint formed when the uncoated strip of the first plate is placed over the adsorbent layer of the second plate in a manner such that the adsorbing layers of the two adjoining plates are in intimate contact along their entire length so as to permit a chromatogram developed initially on the first plate to be transferred, in part or in whole, onto the adsorbent layer of the second plate.

4,065,385

APPARATUS AND METHOD FOR SEPARATING A MIXTURE OF LIQUID AND COAL FINES

Ali I. Aktay, Munster, Ind.; Bohdan J. Bodnaruk, Homewood, Ill., and Michael O. Holowaty, Crown Point, Ind., assignors to Inland Steel Company, Chicago, Ill.

Continuation of Ser. No. 647,051, Jan. 7, 1976, abandoned. This application Dec. 13, 1976, Ser. No. 749,813

Int. Cl.^{2} B03D *1/24*

U.S. Cl. 210—44 12 Claims

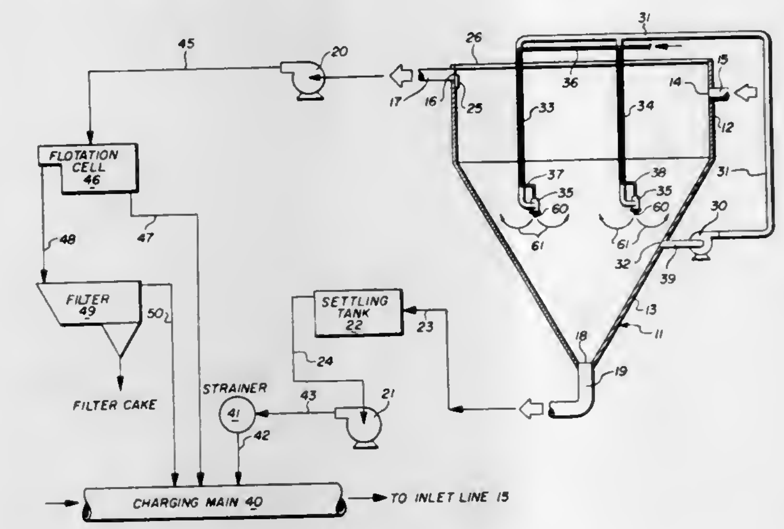

1. An apparatus for separating coal fines from a mixture of liquid and coal fines, said apparatus comprising:

a tank including an unconverging upper portion and a downwardly converging lower portion;

first outlet means for removing froth from the upper portion of said tank;

second outlet means at the bottom of said tank for removing liquid from said tank;

means for withdrawing liquid from said tank through said first and second outlet means and for providing in said tank a first zone in which liquid is urged toward said first outlet means and a second zone, below said first zone, in which liquid is normally urged downwardly toward said second outlet means;

said downwardly converging lower tank portion comprising means for accelerating the downward movement of liquid in said second zone as the downwardly moving liquid approaches said second outlet means;

means for introducing into said tank a first mixture comprising liquid and coal fines;

means for premixing air with at least a portion of the liquid from said first mixture to form a second mixture comprising said liquid and bubbles of air;

and means for introducing said second mixture into said downwardly converging lower portion, substantially below said unconverging upper portion, in said second zone at a level at which rising air bubbles from said second mixture exert an upward force on coal fines mixed with liquid in said second zone sufficient to overcome the downward urging of the liquid on the coal fines, for the acceleration the liquid undergoes at that level as a result of said downwardly converging lower tank portion, and to urge said coal fines at that level toward said first outlet means.

8. A method for separating, in a tank, coal fines from a mixture of liquid and coal fines, said method comprising the steps of:

providing a liquid-containing tank with an unconverging upper portion, a downwardly converging lower portion, a first outlet for removing froth from said upper portion of said tank and a second outlet for removing liquid from the bottom of the tank;

simultaneously withdrawing liquid from said tank through said first and second tank outlets at respective withdrawal rates which cooperate to provide, in the tank, a first zone in which said liquid is urged toward said first outlet and a second zone, below said first zone, in which said liquid is normally urged downwardly toward said second outlet;

accelerating the downward movement of liquid in said second zone as the downwardly moving liquid descends through said downwardly converging lower tank portion and approaches said second outlet;

introducing a first mixture of said liquid and said coal fines into said tank;

premixing air with at least a portion of the liquid from said first mixture, to form a second mixture comprising said liquid and air bubbles;

and introducing said second mixture into said downwardly converging lower portion, substantially below said unconverging upper portion, in said second zone at a level at which rising air bubbles from said second mixture exert an upward force on coal fines mixed with liquid in said second zone sufficient to overcome the downward urging of the liquid on the coal fines, for the acceleration the liquid undergoes at that level as a result of its descent through said downwardly converging lower tank portion, and to urge said coal fines at that level toward said first outlet.

4,065,386

ALGAE GROWTH CONTROL

Robert Alexander Rigby, Canterbury, Australia, assignor to Algard Pty. Ltd., Balwyn, Australia

Filed June 16, 1976, Ser. No. 696,502

Claims priority, application Australia, Dec. 10, 1975, 4244/75

Int. Cl.^{2} C02B *3/02*

U.S. Cl. 210—60 6 Claims

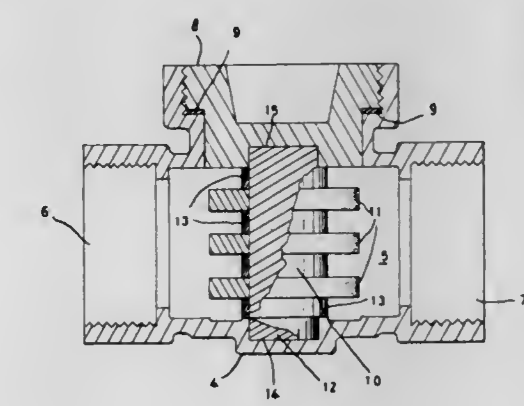

1. A method for treating water disposable in an open, uncovered storage to inhibit the growth of algae and bacteria therein comprising the steps of:

a. conducting the water along a predetermined path to open, uncovered storage; and
b. producing a magnetic field in said predetermined path of sufficient strength to inhibit the growth of algae and bacteria in said water.

4,065,387

SLIME CONTROL METHOD

Takao Tsuneki, Ebina; Norio Takahashi, and Hirohisa Tashiro, both of Yokohama, all of Japan, assignors to Kurita Water Industries, Ltd., Osaka, Japan

Filed May 5, 1976, Ser. No. 683,249

Claims priority, application Japan, May 14, 1975, 50-57691

Int. Cl.^{2} C02B *1/36*

U.S. Cl. 210—62 8 Claims

1. A method for reducing the amount of slime that adheres on solid surfaces in contact with a circulating stream of process water wherein said process water contains microorganisms capable of forming and depositing a slime on said surfaces, which comprises the step of: adding to said circulating stream of process water from 1 to 200 ppm of a water-soluble bromite compound selected from the group consisting of sodium bromite and potassium bromite so that said bromite compound is effective to reduce the adhesion of slime on said solid surfaces.

4,065,388
PROCESS FOR REMOVAL OF UNDISSOLVED IMPURITIES FROM ION EXCHANGE RESIN
George Flynn, Bridgewater Township, N.J., and Eli Salem, Brooklyn, N.Y., assignors to Ecodyne Corporation, Union, N.J.
Filed Mar. 3, 1976, Ser. No. 663,369
Int. Cl.² B01D *23/24*
U.S. Cl. 210—80 **7 Claims**

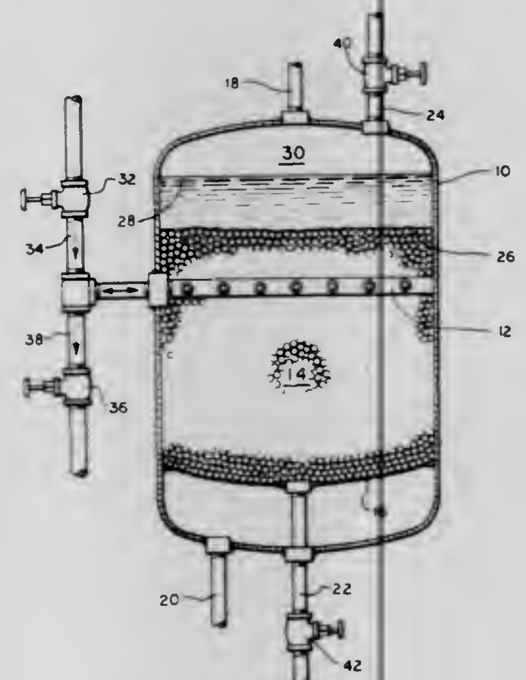

1. A process for cleaning particulate impurities from a bed of ion exchange resins contained in a filtration vessel, comprising:
adjusting the level of liquid within said vessel to a point intermediate the top of said vessel and the upper surface of said bed to provide a freeboard area within said vessel;
introducing a gas into said vessel at a level below the upper surface of said resin bed but above a substantial lower portion thereof, thereby scrubbing said particulate impurities from the resin above said gas introduction level and suspending said impurities in said liquid;
collecting said gas in said freeboard area of said vessel and terminating said gas introudction upon reaching a predetermined pressure within said vessel; and
draining a portion of said liquid containing said suspended mpurities from said vessel at a level generally equal to said gas introduction level.

4,065,389
APPARATUS FOR DETECTING PROPORTION OF OIL IN OIL/WATER MIXTURES
Jay L. McGrew, Littleton, Colo., assignor to Marine Construction & Design Co., Seattle, Wash.
Filed Aug. 30, 1976, Ser. No. 718,799
Int. Cl.² B01D *15/02*
U.S. Cl. 210—96 R **2 Claims**

1. Apparatus to detect presence of oil above a pre-determined proportion in water comprising separator means having output means with separate receiving compartments for the respective liquids, said separator means adapted for connection to a source of a mixture of such liquids and operable to transfer such mixture therefrom to said output means at a first substantially constant volumetric rate while separating the oil from the water for discharge thereof into their respective receiving compartments, rate responsive measurement means operatively associated with the receiving compartment for the oil, calibrated in relation to such first volumetric rate and operable during such transfer to detect and respond to rate of arrival of such separated oil in such latter receiving compartment exceeding a predetermined fraction of said first volumetric rate, said measurement means comprising pump means operable to transfer oil from said receiving compartment for the oil at a second substantially constant volumetric rate, a predetermined fraction of said first volumetric rate, and associated detector means operable to detect the condition of volumetric rate of separated oil entering said latter receiving compartment exceeding said second volumetric rate by sensing oil in said latter receiving compartment rising above a predetermined upper level therein during operation of said pump means, and energizing circuit means for such pump means including first

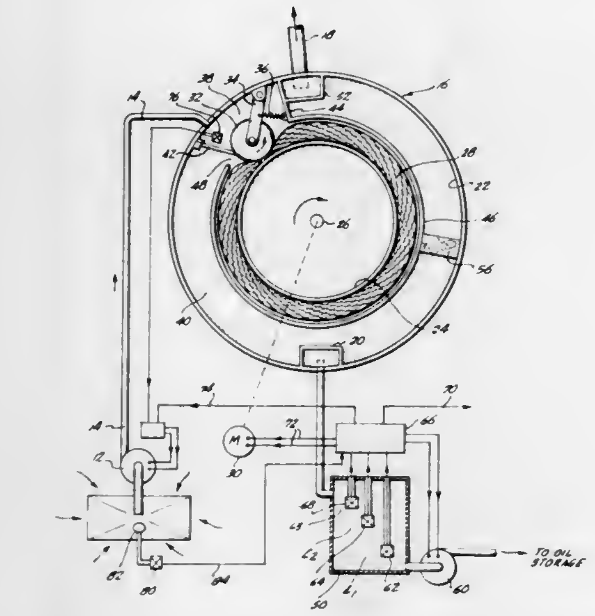

switch means operable to initiate operation of said pump means in response to level of oil in said latter receiving compartment rising above a predetermined second level, below said upper level, and second switch means operable to terminate operation of said pump means in response to level of oil in said latter receiving compartment dropping below a predetermined third level, below said second level.

4,065,390
PLATE TYPE FILTER APPARATUS
John R. Schneider, Belvedere, and Kenneth B. Klyver, Santa Rosa, both of Calif., assignors to J.R. Schneider Co., Inc., Tiburon, Calif.
Filed Feb. 7, 1977, Ser. No. 766,186
Int. Cl.² B01D *25/12*
U.S. Cl. 210—225 **9 Claims**

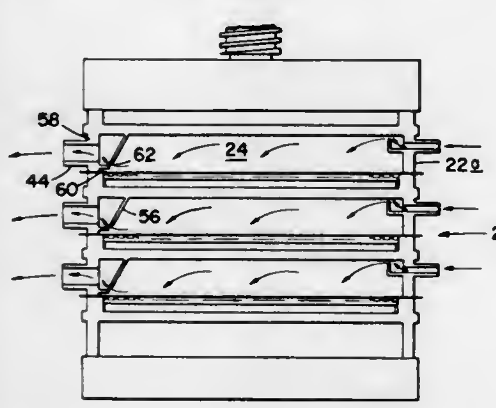

1. In a liquid filter comprising a plurality of separate plate assemblies, each having a central planar member with a downwardly extending peripheral skirt and an upwardly extending peripheral sidewall, said assemblies being stacked together with a layer of filter media between each pair of adjacent assemblies to form a closed upper liquid chamber on one side of the media, surrounded by a said peripheral skirt with inlets for liquid to be filtered in an inlet skirt portion and a lower chamber on the opposite side of said media surrounded by a said peripheral sidewall of another assembly and having outlets for filtered liquid in an outlet skirt portion, the improvement comprising:
a baffle means in each said plate assembly parallel to and spaced inwardly from one side of said peripheral skirt

having said inlets, said baffle means including a first elongated strip extending downwardly from the planar member of the plate assembly and means forming a series of openings along the bottom edge of said first elongated strip, said openings being spaced above said filter media and thereby enabling liquid to be blown out of the upper chamber back through said inlets so that said plate assemblies can be rapidly drained of liquid before being separated to change the filter media.

4,065,391
FLUID DISTRIBUTOR
Patrick Farabaugh, Dallas, Tex., assignor to Sybron Corporation, Rochester, N.Y.
Continuation-in-part of Ser. No. 611,585, Sept. 8, 1975, abandoned, and Ser. No. 611,597, Sept. 8, 1975, abandoned. This application Aug. 4, 1976, Ser. No. 710,473
Int. Cl.² B01D *23/16, 23/20*
U.S. Cl. 210—274 **14 Claims**

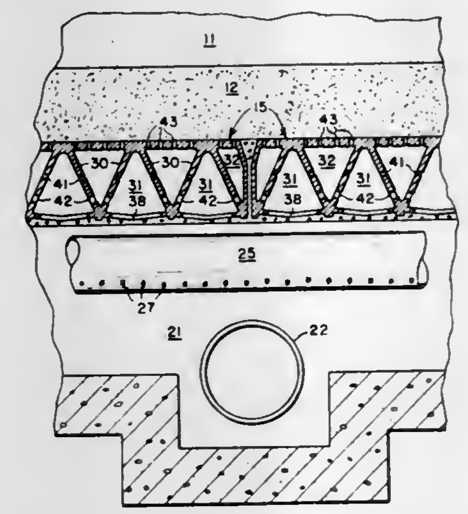

1. In a system for distributing a liquid uniformly throughout a bed of granular media, including:
a distributor positioned beneath and supporting said media, said distributor being divided into primary horizontal conduits and secondary horizontal conduits that extend parallel to said primary horizontal conduits and containing liquid metering orifices that connect said primary conduits to said secondary conduits and dispersion orifices that connect said secondary conduits to said bed of granular media;
a flume extending transverse to said primary conduits and connected to each of said primary conduits; and
means for supplying a liquid to said flume, whereby said liquid flows from said flume to said primary conduits, through said liquid metering orifices into said secondary conduits, and through said dispersion orifices into said bed;
the improvement comprising:
a plurality of inclined walls separating said primary conduits from said secondary conduits, whereby said secondary conduits are positioned beside said primary conduits, said primary conduits have an upwardly tapering cross-section and said secondary conduits have a downwardly tapering cross-section;
gas metering orifices located at an intermediate level in said inclined walls and defining a gas flow passage above said gas metering orifices in said primary conduits, said liquid metering orifices being positioned beneath and separated from said gas metering orifices in said inclined walls; and
means for supplying a gas to said primary conduits, whereby said gas passes through said gas metering orifices into said secondary conduits and through said dispersion orifices into said bed.

4,065,392
FILTER
Howard M. Gammon, 500 Brielle Road, Manasquan, N.J. 08736
Filed June 22, 1976, Ser. No. 698,511
Int. Cl.² B01D *27/02*
U.S. Cl. 210—282 **5 Claims**

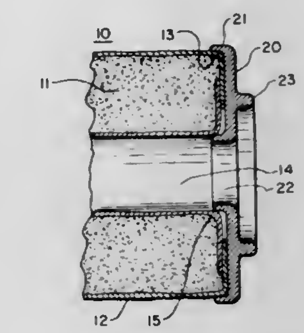

1. A liquid filter element for use in stacks comprising an inner tubular center portion formed of a material permeable to said liquid;
an outer tubular sleeve portion formed of a material permeable to said liquid;
a first means for sealing the space between said inner tubular portion and said outer tubular portion at one end of said filter element;
a filtering material filling the space between said inner and said outer tubular portions;
said inner tubular center portion having tabs extending beyond the other end of said filter element, said tabs being folded outwardly over said filtering material;
said outer tubular sleeve portion having material extending beyond said other end of said filter element, said material being folded inwardly over said filtering material;
a second means for sealing the space between said inner tubular portion and said outer tubular portion at said other end of said filter element;
said second means comprising an impervious material impregnating said tabs of said inner tubular portion extending beyond said other end of said filter element and impregnating said material of said outer tubular portion extending beyond said other end of said filter element, and being molded to form a continuous seal between said material of said outer tubular sleeve portion and said material of said inner tubular center portion;
at least one continuous annular ridge in said second means extending above the surface of said impervious material and situated between said inner and said outer tubular portions and
said second means of one of said filter elements being seated against a first means of another of said filter elements, whereby said annular ridge of said second means of said one filter element will embed itself into said first means of said other filter element, to avoid by-pass of said liquid around said filter element.

4,065,393
CONICAL CENTRIFUGE WITH CONTINUOUS ACTION
Stoyan Hristov Sendov, Sofia; Ivan Angelov Nikolov, Vidin; Ivan Alexandrov Kuklin, Vidin, and Mircho Georgiev Mirchev, Vidin, all of Bulgaria, assignors to Chimkombinat, Vidin, Bulgaria
Filed July 26, 1976, Ser. No. 708,689
Claims priority, application Bulgaria, Aug. 2, 1975, 30711
Int. Cl.² B01D *33/02*
U.S. Cl. 210—377 **1 Claim**

1. A centrifuge for the separation of a liquid and a solid in a suspension of said solid in said liquid, said centrifuge comprising:
an upright cylindrical housing having a conical bottom formed with a discharge fitting for discharging said solid;
an inner cylinder disposed coaxially within said housing and

provided with a conical bottom having a discharge fitting for discharging liquid;

a cover closing said housing at the top thereof;

a generally cylindrical bearing box mounted on said cover and extending coaxially downwardly into said inner cylinder;

a single drive shaft journaled in said bearing box and having a lower end within said inner cylinder below said bearing box and an upper end extending above said cover said single shaft minimizing the requirement for seals within said centrifuge;

a motor mounted on said cover and operatively connected to said upper end of said shaft for driving same;

a rotor connected to said lower end of said shaft within said inner cylinder and formed with an upwardly diverging conical sieve reaching substantially to the top of said inner

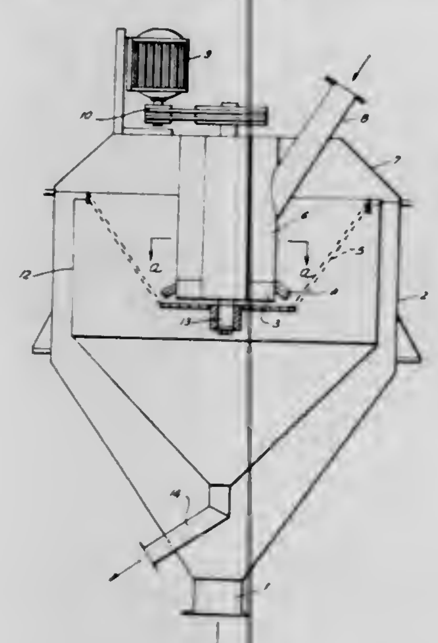

cylinder whereby solids migrating over the upper edge of said sieve pass around said inner cylinder into the conical bottom of said housing while liquid traversing said sieve passes into the conical bottom of said inner cylinder;

a pipe coaxially surrounding said bearing box and spaced therefrom, said pipe being mounted on said bearing box at the lower end thereof by a plurality of generally flat vertical vanes, said vanes extending tangentially from the outer surface of the lower end of said bearing box to the inner surface of the lower end of said pipe;

a plurality of helical arc blades disposed on the lower end of the outer surface of said pipe; said vanes and blades cooperatively functioning to uniformly distribute said suspension over the inner surface of said conical sieve;

an inlet for said suspension opening into said pipe, said pipe being downwardly open toward said rotor at the bottom of said pipe.

4,065,394

INTUMESCENT FIRE RETARDANT MATERIAL

Richard D. Pratt, Cincinnati; Paul F. Proffitt, Reading, and George Webb, Cincinnati, all of Ohio, assignors to General Electric Company, Cincinnati, Ohio

Division of Ser. No. 550,933, Feb. 19, 1975, Pat. No. 3,983,082. This application May 17, 1976, Ser. No. 687,101

Int. Cl.² B27K *3/00*

U.S. Cl. 252—8.1 3 Claims

1. An improved mixture of ingredients for use with a resin base in the formation of an intumescent fire retardant material, the mixture comprising four ingredients, by weight:

1–10 parts of an oxide of iron;
17–52 parts of a phosphate of potassium;
2–30 parts of a charring material; and
2–20 parts of a blowing agent.

4,065,395

ARYL DIUREA-THICKENED GREASES

Wayne W. Bailey, Gibsonia, Pa., assignor to Gulf Research & Development Company, Pittsburgh, Pa.

Filed Dec. 6, 1976, Ser. No. 747,894

Int. Cl.² C10M *1/10, 3/02, 1/32, 3/26*

U.S. Cl. 252—25 20 Claims

1. A lubricating grease comprising a base oil of lubricating viscosity thickened to a grease with a mixture of aryl diureas obtained by reacting an aryl amine mixture of p-toluidine and p-chloroaniline with a toluene diisocyanate in the proportion of two moles of said aryl amine mixture per mole of said diisocyanate, the mole ratio of p-toluidine to p-chloroaniline in said aryl amine mixture ranging from about 3:1 to about 17:1.

16. A lubricating grease according to claim 1 which further includes a precipitated calcium carbonate in an amount ranging from about 1 to about 10 percent by weight of the total composition.

4,065,396

MAGNESIUM OXIDE PROCESS

Charles R. Dickey, Covina, and Vanderveer Voorhees, Los Altos, both of Calif., assignors to Bray Oil Co., Los Angeles, Calif.

Continuation-in-part of Ser. No. 9,488, Feb. 9, 1970, abandoned. This application Nov. 30, 1973, Ser. No. 420,625

Int. Cl.² C10M *1/40*

U.S. Cl. 252—33.4 1 Claim

1. In the process of preparing a colloidal dispersion of magnesium carbonate in a lower alcohol of 1 to 4 carbon atoms by the simultaneous action of magnesium oxide and CO_2, the improvement comprising preparing the said magnesium oxide by roasting magnesium carbonate at a temperature of 800°–900° F. and cooling the resulting oxide in the absence of moisture, thereby producing an oxide having a crystal structure rendering it reactive with alcohol and CO_2, then contacting said oxide with said alcohol and CO_2 and a temperature of about 80° to 200° F. to form said colloidal dispersion.

4,065,397

PLANIGRAPHIC X-RAY APPARATUS FOR THE PREPARATION OF TOMOGRAPHIC IMAGES

Ernst-Peter Ruhrnschopf, Erlangen, and Gerhard Linke, Erlangen-Frauenaurach, both of Germany, assignors to Siemens Aktiengesellschaft, Berlin & Munich, Germany

Continuation-in-part of Ser. No. 627,466, Oct. 30, 1975, abandoned. This application Dec. 16, 1976, Ser. No. 751,204

Claims priority, application Germany, Dec. 9, 1974, 2458225; France, Aug. 8, 1975, 75.24840; United Kingdom, Aug. 12, 1975, 33623/75

Int. Cl.² G03B *41/16*

U.S. Cl. 250—445 T 2 Claims

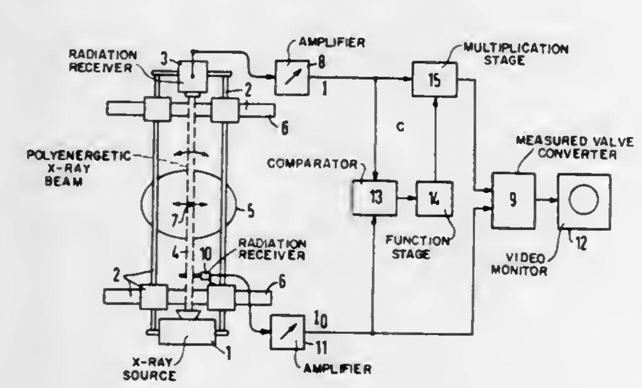

1. In a planigraphic X-ray apparatus for the preparation of tomographic images of an exposure object; including an X-ray measuring arrangement having an X-ray source generating an X-ray beam penetrating the exposure object, the cross-sectional expanse of said beam perpendicular to the planigraphic plane being equal to the plane thickness; a first radiation receiver for determining the radiation intensity of the X-radiation as a reference value preceding its ingress into the object; a second radiation receiver for determining the radiation intensity behind the object in the direction of the radiation as attenuated values through scanning of the projected X-ray beam at sequential equidistant points; a comparator for forming a measured magnitude from the reference and attenuated values; a drive means for the measuring arrangement including a pivot mounting for producing rotational movement of the X-ray measuring arrangement through small equidistant angular amounts about a rotational axis generally coincident with the symmetrical longitudinal axis of the exposure object in alternating sequence with respectively each scan; and a measured value converter for transforming the measured values into a tomographic image the improvement comprising: a function stage for forming, from the logarithm of the measured value y defined by the X-ray intensity I_0 in the ray direction preceding the exposure object and the X-ray intensity I behind the exposure object as the quotient, a correction factor C pursuant to the proximating function

$$C = \begin{cases} 1 + y \cdot (y - y_1) \cdot (A_0 + A_1 y) \text{ for } 0 \leqq y \leqq y_1 \text{ resp.} \\ 1 + (y - y_1) \cdot (B_0 B_1 \cdot y + B_2 \cdot y^2) \text{ for } y_1 \leqq y \leqq 10 \end{cases}$$

with counting values, dependent upon a selectable normalized radiation spectrum, of y_1, A_0; B_0; and B_2, said and counting values, at an X-ray tube voltage of 100 kV and a normalization spectral line at 51 keV, are $y_1 = 4.45$; $A_0 = -0.035$; $A_1 = 0.0039$; $B_0 = -0.04$; $B_1 = -0.0126$; and $B_2 = 0.00075$; and a multiplication stage receiving said correction factor C for the multiplicative influencing of the measured value.

4,065,398

LIQUID SOAP COMPOSITION

Hendrik Willem Brouwer, Vlaardingen, Netherlands, assignor to Lever Brothers Company, New York, N.Y.

Continuation of Ser. No. 641,203, Dec. 16, 1975, abandoned, which is a continuation of Ser. No. 450,533, March 12, 1974, abandoned. This application Aug. 16, 1976, Ser. No. 714,450

Claims priority, application United Kingdom, Mar. 15, 1973, 12513/73; Sept. 24, 1973, 44624/73

Int. Cl.² C11D *9/02, 9/14, 17/08*

U.S. Cl. 252—108 2 Claims

1. An aqueous liquid sodium soap solution containing from 38% to 45% by weight of a sodium soap consisting essentially of a mixture of A) at least one sodium soap of C_8–C_{16} saturated fatty acid and B) at least one sodium soap of fatty acids selected from the group consisting essentially of C_{16}–C_{22} mono and C_{16}–C_{22} disaturated fatty acids and mixtures thereof, the ratio of A to B being from 4:1 to 1:4.

4,065,399

PROCESS FOR CONTROLLING A BONDING GAS SYSTEM

Franklin T. Osborne, Gulf Breeze, Fla., assignor to Monsanto Company, St. Louis, Mo.

Filed Sept. 17, 1976, Ser. No. 724,038

Int. Cl.² C09K *3/00*

U.S. Cl. 252—182 5 Claims

1. A process for controlling the temperature and composition of a bonding gas used for bonding a nonwoven web of continuous nylon filaments and for supplying said gas to a gas box at a temperature just above its dew-point, comprising the steps;

supplying a monitored concentration of liquid HCl, maintained at a predetermined temperature to a stripper column;

circulating an HCl-water-air mixture which contains a low volume percent of HCl through said stripper column so that said mixture evaporates a portion of the liquid HCl wherein the volume percent of HCl in said mixture is increased thereby forming a bonding gas having the desired HCl concentration;

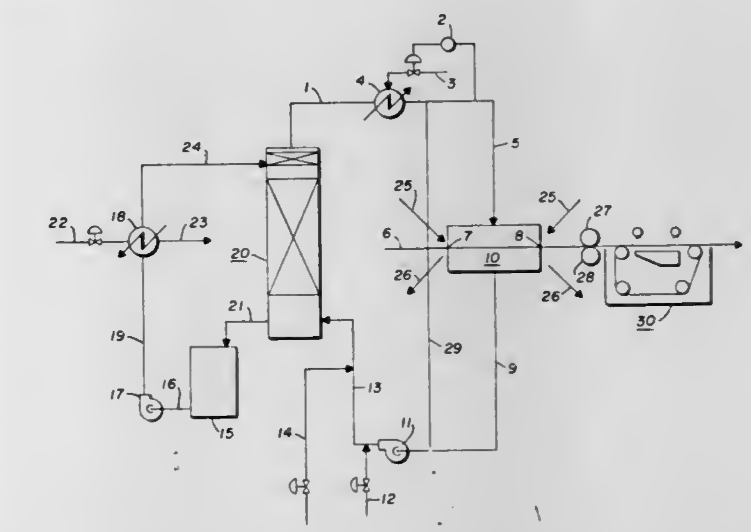

controlling the temperature of said gas as it is drawn off the column so that said gas has an HCl concentration just above its dew-point; and

feeding said gas to a gas box.

4,065,400

NUCLEAR WASTE SOLIDIFICATION

William J. Bjorklund, Richland, Wash., assignor to The United States of America as represented by the United States Energy Research and Development Administration, Washington, D.C.

Filed Apr. 8, 1976, Ser. No. 675,086

Int. Cl.² G21F *9/14*

U.S. Cl. 252—301.1 W 4 Claims

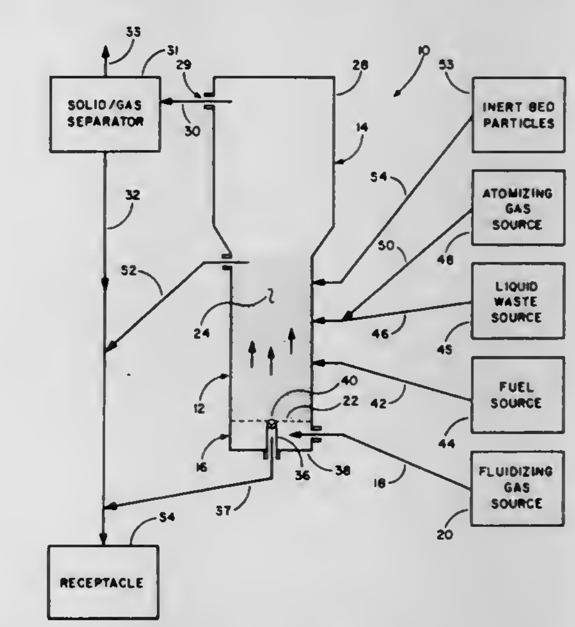

1. A process for continuously solidifying high level radioactive waste resulting from reprocessing irradiated nuclear reactor fuels anc containing virtually all of the nonvolatile fission products, several tenths of one percent of the uranium and plutonium originally in the irradiated fuels, and other actinides formed by transmutation of the uranium and plutonium as normally produced in a nuclear reactor, by using a fluidized inert bed having a minimal fission product inventory comprising introducing an inert particulate material comprising silica particles having an average particle diameter of from about 0.20 to about 0.40 mm into a chamber; heating said material to from about 400° to about 1300° C; dispersing air as a fluidizing gas beneath said material to agitate same and form a fluidized bed; atomizing said radioactive liquid waste; introducing said atomized waste into an upper portion of said heated, fluidized bed to effect calcination of said waste and formation of a fluidized inert bed with said atomized waste comprising from about 10 to about 15 weight percent calcined radioactive waste and from about 90 to 85 weight percent silica particles, a first

portion of said calcined waste being spray dried, a second portion of said calcined waste depositing and remaining on said particulate fluidized bed material, and a third portion of said calcined waste depositing on said bed material and attriting therefrom; removing solid calcine radioactive waste from said reactor chamber, said removing comprising elutriating said spray dried first portion, elutriating said attrited third portion, separating said elutriated solid calcine waste from said fluidizing gas, and overflowing said second portion from said fluidized bed at an about upper portion of said fluidized bed, said introducing of said atomized waste at an upper portion of said inert fluidized bed enhancing attrition and minimizing inert bed loss through overflow; introducing additional inert particulate material into said reaction chamber to maintain said inert fluidized bed; continuing said atomizing, calcining and removing of said solidified radioactive waste, and collecting said first, second and third portions removed from said fluidized inert bed as a readily vitrifiable product comprising about 90 weight percent calcined waste and about 10 weight percent silica, and having an average particle diameter of from about 0.1 mm to about 0.3 mm.

4,065,401

BLOWING AGENT MIXTURE

Wolfgang Cohnen, Leverkusen, and Gerhard Apel, Krefeld, both of Germany, assignors to Bayer Aktiengesellschaft, Leverkusen, Germany

Filed Aug. 22, 1975, Ser. No. 606,913

Claims priority, application Germany, Aug. 29, 1974, 2441418

Int. Cl.² C09K *3/00*; **C08J** *9/08*

U.S. Cl. 252—350 **3 Claims**

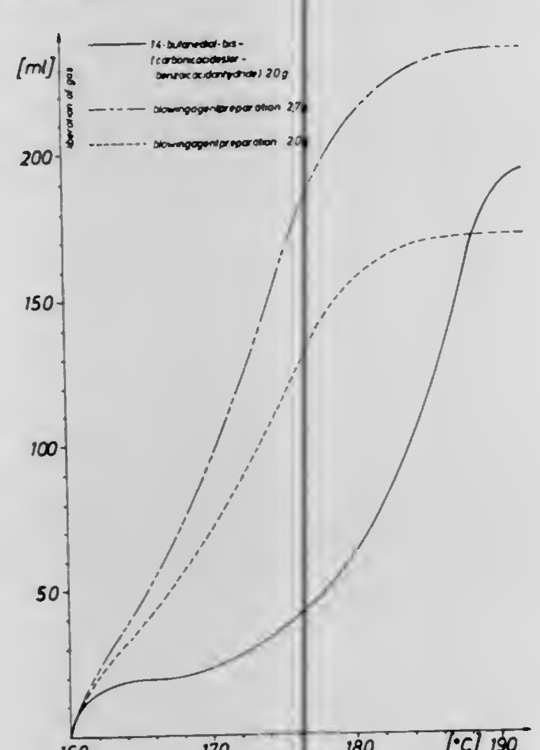

1. Blowing agent mixture consisting of from 85 – 60%, by weight, of 1,4-butanediol bis-(carbonic acid ester-benzoic acid anhydride) and from 15 – 40%, by weight, of silicon dioxide.

4,065,402

TALL OIL DEFOAMER FOR HIGH STRENGTH ACID MEDIA

William A. Satterwhite, Englishtown; Robert M. Leach, Cranbury, and Harold A. Stuhler, Browns Mills, all of N.J., assignors to Cities Service Company, Tulsa, Okla.

Filed Apr. 29, 1976, Ser. No. 681,621

Int. Cl.² B01D *19/04*

U.S. Cl. 252—358 **38 Claims**

1. A defoamer for controlling the foam in high strength acid media comprising a majority of a fatty acid and a minority of a long chain alcohol, said alcohol having from about 4 to about 20 carbon atoms, and the ratio of said alcohol to said fatty acid is from about 0.025:1 to about 0.75:1.

4,065,403

TALL OIL DEFOAMER HAVING A NONIONIC ADDITIVE DEFOAMER FOR HIGH STRENGTH ACID MEDIA

William A. Satterwhite, Englishtown; Robert M. Leach, Cranbury, and Harold A. Stuhler, Browns Mills, all of N.J., assignors to Cities Service Company, Tulsa, Okla.

Filed June 15, 1976, Ser. No. 696,242

Int. Cl.² B01D *17/04*

U.S. Cl. 252—358 **47 Claims**

1. A defoamer for controlling the foam in high strength acid media comprising a majority of a sulfonated fatty acid and a minority of a nonionic additive having the formula $R—O(R'—O)_nR''$ [$R-O(R')_nR''$] wherein R' is hydrocarbyl [alkylene oxide], R and R'' is hydrocarbonyl or hydroxyhydrocarbyl, and n is an integer of from 1 to about 200.

4,065,404

TALL OIL DEFOAMER FOR HIGH STRENGTH ACID MEDIA

William A. Satterwhite, Englishtown; Robert M. Leach, Cranbury, and Harold A. Stuhler, Browns Mills, all of N.J., assignors to Cities Service Company, Tulsa, Okla.

Filed June 15, 1976, Ser. No. 696,241

Int. Cl.² B01D *17/04*

U.S. Cl. 252—358 **56 Claims**

1. A defoamer for controlling the foam in high strength acid media comprising a majority of a sulfonated fatty acid and a minority of a long chain alcohol, said alcohol containing from about 4 carbon atoms to about 20 carbon atoms, and a nonionic additive having a formula [$R—O(R')_nR''$] $R—O(R'—O)_nR''$ wherein R' is a, hydrocarbyl, R is hydrocarbyl or hydroxyhydrocarbyl, R'' is hydrocarbyl or hydroxyhydrocarbyl, and n is an integer of from 1 to about 200.

4,065,405

RECOVERY OF TANTALUM AND/OR NIOBIUM PENTAFLUORIDES FROM A HYDROCARBON CONVERSION CATALYST

Roger Hulme, Somerville, N.J., assignor to Exxon Research and Engineering Company, Linden, N.J.

Filed Dec. 3, 1976, Ser. No. 747,091

Int. Cl.² B01J *27/32*; **C07C** *3/54, 5/28*; **C10G** *35/06*

U.S. Cl. 252—415 **14 Claims**

1. In a hydrocarbon conversion process which comprises contacting a hydrocarbon feedstock with a substantially liquid phase acid catalyst comprising (a) a metal pentafluoride selected from the group consisting of tantalum pentafluoride, niobium pentafluoride, and mixtures thereof and (b) hydrogen fluoride, thereby forming a hydrocarbon phase and a catalyst phase, said catalyst phase having become at least partially deactivated due to the formation of catalytically less active complexes with at least a portion of the metal pentafluoride, the improvement which comprises recovering at least a portion of the metal pentafluoride component of the catalyst according to the steps comprising

1. distilling said catalyst at a temperature ranging from about 70° to about 400° C. in the presence of a Lewis acid selected from the group consisting of the trihalides of aluminum, the tetrahalides of titanium, zirconium, hafnium and mixtures thereof to form the metal pentahalide of the catalyst component, and
2. contacting the metal pentahalide thus formed with hydrogen fluoride in an amount sufficient to convert at least a portion of said metal pentahalide to the corresponding metal pentafluoride, thereby recovering the metal pentafluoride component of the catalyst possessing a lower level of said catalytically less active complexes than that possessed by the metal pentafluoride component of said deactivated catalyst.

6. In a hydrocarbon conversion process which comprises contacting a hydrocarbon feedstock with a substantially liquid

phase acid catalyst comprising (a) a metal pentafluoride selected from the group consisting of tantalum pentafluoride, niobium pentafluoride, and mixtures thereof and (b) hydrogen fluoride, thereby forming a hydrocarbon phase and a catalyst phase, said catalyst phase having become at least partially deactivated due to the formation of catalytically less active complexes with at least a portion of the metal pentafluoride, the improvement which comprises recovering at least a portion of the metal pentafluoride component of the catalyst according to the steps comprising:

1. stripping at least a portion of the hydrogen fluoride from said partially deactivated catalyst,
2. extracting the uncomplexed metal pentafluoride from the residue of step (1) with a liquid hydrocarbon,
3. distilling said catalyst at a temperature ranging from about 70° to about 400° C in the presence of a Lewis acid selected from the group consisting of the trihalides of aluminum, the tetrahalides of titanium, zirconium, hafnium and mixtures thereof to form the metal pentahalide of the catalyst component, and
4. contacting the metal pentahalide formed in step (3) with hydrogen fluoride in an amount sufficient to convert at least a portion of said metal pentahalide to the corresponding metal pentafluoride, thereby recovering the metal pentafluoride component of the catalyst possessing a lower level of said catalytically less active complexes than that possessed by the metal pentafluoride component of said deactivated catalyst.

11. In a hydrocarbon conversion process which comprises contacting a hydrocarbon feedstock with a substantially liquid phase acid catalyst comprising (a) a metal pentafluoride selected from the group consisting of tantalum pentafluoride, niobium pentafluoride, and mixtures thereof and (b) hydrogen fluoride, thereby forming a hydrocarbon phase and a catalyst phase, said catalyst phase having become at least partially deactivated due to the formation of catalytically less active complexes with at least a portion of the metal pentafluoride, the improvement which comprises recovering at least a portion of the metal pentafluoride component of the catalyst by distilling said catalyst at a temperature ranging from about 70° to about 400° C in the presence of a Lewis acid selected from the group consisting of aluminum fluoride, the tetrafluorides of titanium, zirconium, hafnium and mixtures thereof to form the metal pentafluoride component of the catalyst which possesses a lower level of said catalytically less active complexes than that possessed by the metal pentafluoride component of said deactivated catalyst.

4,065,406

CATALYST FOR USE IN TREATING GAS

Atsushi Nishino; Kazunori Sonetaka, and Kunio Kimura, all of Neyagawa, Japan, assignors to Matsushita Electric Industrial Co., Ltd., Japan

Filed Jan. 23, 1976, Ser. No. 651,739

Claims priority, application Japan, Jan. 29, 1975, 50-12859

Int. Cl.² B01J *27/20, 23/76*

U.S. Cl. 252—443 **14 Claims**

1. A catalyst comprising a mixture of from 45 to 75% by weight of manganese dioxide, from 15 to 25% by weight of calcium aluminate, from 5 to 15% by weight of iron oxyhydroxide and from 2 to 10% by weight of copper hydroxycarbonate.

4,065,407

PROCESS FOR PREPARING SHAPED PARTICLES FROM REHYDRATABLE ALUMINA

William Edward Bambrick, Old Greenwich, Conn., assignor to American Cyanamid Company, Stamford, Conn.

Filed Sept. 16, 1976, Ser. No. 723,835

Int. Cl.² B01J *21/04*

U.S. Cl. 252—463 **7 Claims**

1. In a method for producing shaped alumina particles suitable for use as catalysts and catalyst supporting comprising preparing an aqueous slurry of an alumina composition containing a substantial portion of a rehydratable alumina, shaping the alumina into desired form, rehydrating to harden the shaped alumina, and curing, drying, and calcining the shaped alumina particles to produce catalyst and catalyst support material, an improvement comprising introducing an aqueous slurry consisting essentially of water and an alumina containing a substantial portion of a rehydratable alumina to a shaping medium selected from

a. a water immiscible phase into which droplets of said alumina slurry are introduced to be shaped by surface tension forces into a spherical beaded form, and
b. tubing of desired cross-sectional size and shape to shape said alumina into extrudate form,

whereby the alumina is fashioned into a desired configuration, and applying heat to said shaping medium to rehydrate and harden the alumina while it is being subjected to the influence of the shaping medium.

4,065,408

α-OXY(OXO) SULFIDE PERFUME AND COLOGNE COMPOSITIONS

William J. Evers, Red Bank; Howard H. Heinsohn, Jr., Hazlet, both of N.J.; Edward J. Shuster, Brooklyn, N.Y., and Frederick Louis Schmitt, Holmdel, N.J., assignors to International Flavors & Fragrances Inc., New York, N.Y.

Filed Sept. 15, 1976, Ser. No. 723,534

Int. Cl.² C11B *9/00*

U.S. Cl. 252—522 **12 Claims**

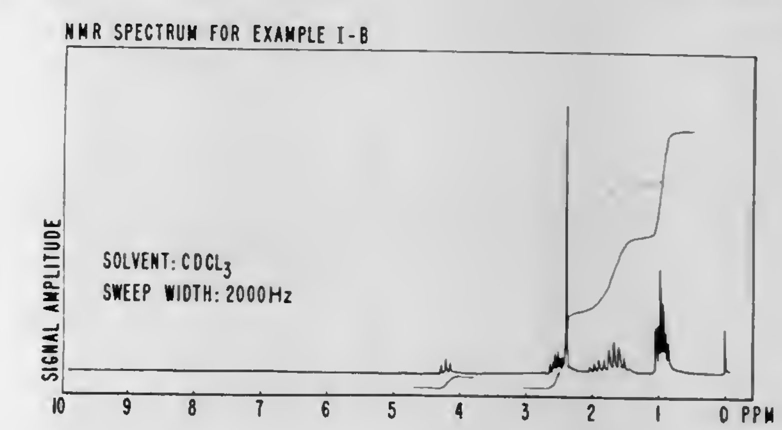

1. A perfume comprising a carrier and a compound having the structure:

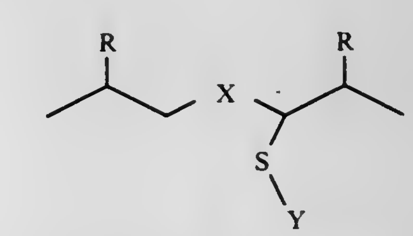

wherein R is one of hydrogen or methyl, X is a moiety having the structure:

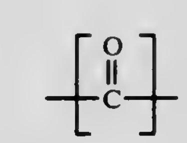

and Y is selected from the group consisting of methyl, methallyl, having the structure:

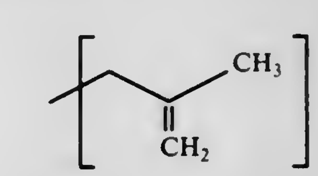

1-propyl, 2-methyl-1-propyl and acetyl.

4,065,409

HARD SURFACE DETERGENT COMPOSITION

John J. Flanagan, Chicago, Ill., assignor to Corporate Brands, Inc., Chicago, Ill.

Filed Aug. 1, 1975, Ser. No. 601,054

Int. Cl.² C11D *1/62, 1/75, 1/835, 3/075*

U.S. Cl. 252—528 **6 Claims**

1. A detergent concentrate composition comprising:

A. about 1.5–2.0% by weight of a non-ionic detergent which is a condensation product of about 8–16 moles of ethylene oxide with one mole of a compound selected from the group consisting of
 1. an alkyl phenol having about 7–10 carbon atoms in the alkyl group;
 2. an alkyl amine having about 12–16 carbon atoms in the alkyl group; and
 3. an aliphatic alcohol having about 12–16 carbon atoms;

B. about 0.25–0.30% by weight of an alkyl dimethyl amine oxide in which the alkyl group has about 12–16 carbon atoms;

C. about 0.30–0.40% by weight of a quaternary ammonium halide having the formula

$$\left[\begin{array}{c} R_2 \\ R_1-N-R_4 \\ R_3 \end{array}\right]^{+} X^{-}$$

where R_1 and R_2 are methyl; R_3 is methyl or a phenyl-substituted alkyl group having about 8–12 carbon atoms; and R_4 is an alkyl group having about 12–18 carbon atoms;

D. about 5–5.8% by weight of an alkaline inorganic builder selected from the group consisting of the alkali metal carbonates, phosphates, and borates; and

E. a defoaming agent in an amount effective to control foaming of the composition in use; and

F. the remainder water.

4,065,410

POLYURETHANE FOAMS HAVING AN INTEGRAL SKIN USING A MIXTURE OF POLYOLS AS THE CHAIN EXTENDER

Hermann Schäfer, Leverkusen, and Christian Weber, Cologne, both of Germany, assignors to Bayer Aktiengesellschaft, Leverkusen, Germany

Filed Mar. 22, 1976, Ser. No. 669,071

Claims priority, application Germany, Mar. 27, 1975, 2513817

Int. Cl.² C08G *18/28*

U.S. Cl. 260—2.5 AM **10 Claims**

1. In a process for the production of polyurethane elastomer moldings having a compact peripheral zone and a cellular core by the in-mold foaming of a foamable reaction mixture which comprises

a. organic polyisocyanate,

b. polyhyroxyl compounds having molecular weights in the range from about 1800 to about 10,000,

c. a chain extender,

d. a blowing agent, and

e. optionally the auxiliaries and additives commonly used in making polyurethanes, the improvement wherein said chain extender (c) is a polyol mixture comprising
 i. ethylene glycol,
 ii. at least one other polyol having a molecular weight of below 1800,

and wherein said polyol mixture has an average molecular weight below about 600, wherein said component (ii) is used in quantities of from 5 to 30% by weight, based on the sum total of (i) plus (ii), wherein said chain extender (c) is used in quantities of from 10 to 30% by weight, based on component (b), and wherein polyisocyanate (a) is used in such a quantity that the foamable mixture has an isocyanate value of 90 to 120.

4,065,411

PROCESS FOR THE PREPARATION OF EXPANDABLE STYRENE POLYMER PARTICLES

Fumito Yamai, Kusatsu; Tomohiko Ishida, and Yoshinori Ikeda, both of Shiga, all of Japan, assignors to Sekisui Kaseihin Kogyo Kabushiki Kaisha, Nara, Japan

Continuation of Ser. No. 582,891, June 2, 1975, abandoned. This application Dec. 1, 1976, Ser. No. 746,251

Claims priority, application Japan, June 3, 1974, 49-63336

Int. Cl.² C08J *9/18*

U.S. Cl. 260—2.5 B **6 Claims**

1. In the process for the preparation of expandable styrene polymer particles comprising impregnating said particles with an expanding agent in the absence of surface active agents, the improvement which comprises employing in the process calcium hydroxide in an amount from 0.3 to 1.5% by weight of the styrene polymer particles, as the sole suspending agent.

4,065,412

PEPTIDE OR PROTEIN SEQUENCING METHOD AND APPARATUS

William J. Dreyer, Altadena, Calif., assignor to Durrum Instrument Corporation, Sunnyvale, Calif.

Filed May 7, 1976, Ser. No. 684,178

Int. Cl.² C08L *37/00*

U.S. Cl. 260—8 **29 Claims**

1. In a method for the sequential degradation of protein or peptide chains in a reaction chamber by successive coupling and cleavage reactions, the steps of:

a. immobilizing said protein or peptide on a macroporous reaction support surface disposed in the reaction chamber, said immobilization being performed either by nonchemical sorptive deposition onto said support surface or by chemical linkage to said support surface,

b. passing coupling reagent through the reaction chamber to contact said immobilized protein or peptide,

c. directing a pressurized vapor stream comprising coupling base vapor through the reaction chamber while said coupling reagent is in contact with said protein or peptide to provide basic environment for coupling of said coupling reagent to said chains,

d. flowing a liquid washing solvent through the reaction chamber to remove unreacted coupling reagent and other contaminants from the support surface,

e. directing a pressurized stream of inert carrier gas through the reaction chamber after step (d) to at least partially dry said support surface,

f. directing a pressurized vapor stream comprising cleavage reagent vapor through the reaction chamber for sufficient time to cleave amino acid derivatives from said coupled protein or peptide, and

g. flowing a liquid extracting solvent through the reaction chamber after step (f) to extract and withdraw said cleaved amino acid derivative.

4,065,413

FIRE RESISTANCE WOOD-BASED BOARDS, PROCESS FOR PRODUCING SAME AND COMPOSITIONS USEFUL THEREFOR

Martin B. MacInnis, Towanda, and L. Rita Quatrini, Athens, both of Pa., assignors to GTE Sylvania Incorporated, Stamford, Conn.

Filed Oct. 8, 1975, Ser. No. 620,918

Int. Cl.² C08K *3/32, 5/21*

U.S. Cl. 260—9 **8 Claims**

1. A process for preparing a fire resistant wall board comprising forming a mixture of wood fibers with about 1% to about 2% by weight of said fibers of a thermosetting resin and about 10% to about 20% by weight of said fibers of a fire retardant composition consisting essentially of an ammonium hydrogen phosphate salt and urea having a P:C atomic ratio of from about 1:1 to about 2:1 and thereafter consolidating said mixture by the simultaneous application of heat and pressure to form a wood-like panel having a density of greater than 0.5 grams/cc.

4,065,414

POLYION COMPLEX AND POLYION COMPLEX FILM

Toru Seita, and Akihiko Shimizu, both of Shin-nanyo, Japan, assignors to Toyo Soda Manufacturing Co., Ltd., Yamaguchi, Japan

Filed Aug. 6, 1976, Ser. No. 712,397

Claims priority, application Japan, Aug. 13, 1975, 50-97509; Aug. 20, 1975, 50-100227

Int. Cl.² C08L *1/28;* **C08G** *81/02*

U.S. Cl. 260—17 R **9 Claims**

1. A polyion complex produced by reacting a polyanion polymer selected from the group consisting of polystyrenesulfonic acid, polyvinylsulfonic acid, polyacrylic acid, polymethacrylic acid, carboxymethyl cellulose, alginic acid or an alkali salt thereof with a polycation polymer having a terminal ethylenic double bond in the repeating units of the polymer and having repeating units of the formula:

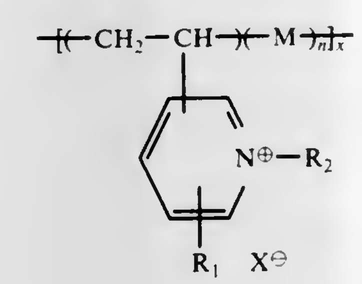

(I)

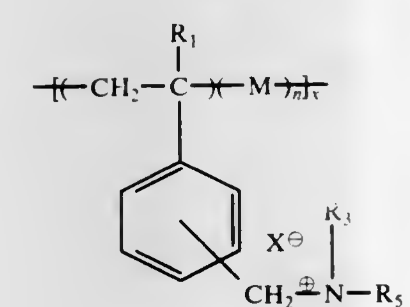

(II)

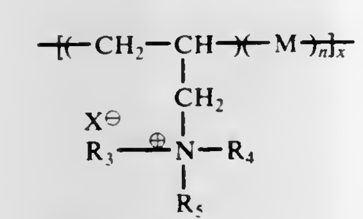

(III)

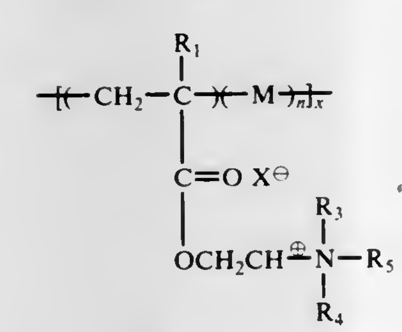

(IV)

wherein R_1 represents hydrogen, or a C_{1-4} alkyl group; R_2 represents a group having the formula:

$—CH_2 - C(R) = CH_2,$

$—CH_2)_m COOC (R) = CH_2,$

$—CH_2)_m COOCH_2 - C (R) = CH_2,$

$—CH_2)_m O - C(R) = CH_2,$

$—CH_2)_m O - CH_2 - C(R) = CH_2,$ or

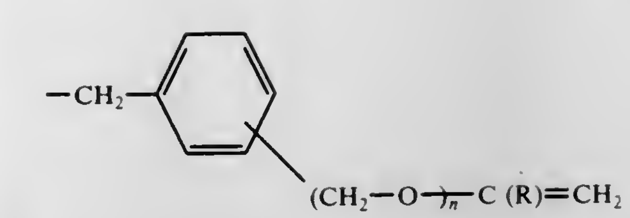

wherein R is hydrogen or a C_{1-4} alkyl group, m is 1 to 3 and n is 0 or 1; R_3, R_4 and R_5 represents a C_{1-4} alkyl group or an alkylol group and at least one of R_3, R_4 and R_5 is the group of R_2 or a group having the formula:

$—CH_2)_m CONH - C(R) - CH_2$, wherein

R is hydrogen or a C_{1-4} alkyl group and m is 1 or 2; n is 0 or an integer less than 40,000; x is an integer of 10 to 50,000; M represents a vinyl monomer having an ethylenic double bond selected from the group consisting of styrene, α-methylstyrene, acrylonitrile, methacrylonitrile, and butadiene; and X represents a halogen atom or a hydroxyl group.

4,065,415

WATER-BASED COATINGS WITH IMPROVED SAGGING AND POPPING CHARACTERISTICS

Roger M. Christenson, Gibsonia, Pa., and Clarence E. Evjen, Williston, N. Dak., assignors to PPG Industries, Inc., Pittsburgh, Pa.

Filed Oct. 1, 1975, Ser. No. 618,582

Int. Cl.² C08L *33/02*

U.S. Cl. 260—17.4 SG **12 Claims**

1. A water-based coating composition having reduced solvent popping, water-popping and sagging characteristics comprising a thermosetting, film-forming organic binder dispersed in an aqueous medium containing at least 60 percent by weight of water, said organic binder consisting essentially of:

A. an interpolymer consisting essentially of:
 1. from about 10 percent to about 40 percent of a carboxylic acid amide in units of the structure:

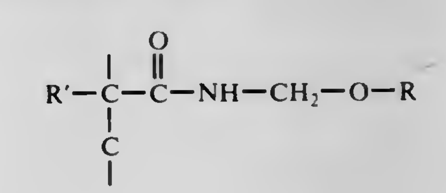

wherein R′ is hydrogen or lower alkyl and R is lower alkyl;
 2. from about 5 to about 20 percent of units of an alpha, beta-ethylenically unsaturated carboxylic acid, and
 3. units of at least one other ethylenically unsaturated monomer containing a $CH_2 = C<$ group, wherein said interpolymer is solubilized by neutralizing at least part of the carboxylic acid groups with a base;

B. from about 5 percent to about 40 percent by weight of binder solids of a non-volatile water-soluble or water-dispersible polyether polyol or polyester polyol having a molecular weight of at least 300; and

C. from about 5 percent to about 40 percent by weight of binder solids of a water soluble or water-dispersible aldehyde condensation resin.

4,065,416

WATER-BASED COATINGS WITH REDUCED SOLVENT OR WATER POPPING AND SAGGING

Roger M. Christenson, Gibsonia, Pa., and Clarence E. Evjen, Williston, N. Dak., assignors to PPG Industries, Inc., Pittsburgh, Pa.

Filed Oct. 1, 1975, Ser. No. 618,584

Int. Cl.² C08L *33/02*

U.S. Cl. 260—17.4 SG **10 Claims**

1. A water-based coating composition having reduced sol-

vent popping, water-popping and sagging characteristics comprising a thermosetting, film-forming organic binder dispersed in an aqueous medium containing at least 60 percent by weight of water, said organic binder consisting essentially of:

A. an interpolymer consisting essentially of the interpolymerization product of:
   1. from about 10 percent to about 40 percent by weight of an N-alkoxyalkyl-substituted amide represented by the structure:

$$R'-\overset{\overset{\displaystyle O}{\|}}{C}-NH-CH_2-O-R,$$

   wherein R' is an aliphatic hydrocarbon radical containing from 2 to 6 carbon atoms and having a single terminal polymerizable alpha, beta-ethylenically unsaturated group and R is a lower alkyl radical containing from 1 to 8 carbon atoms,
   2. from about 5 to about 20 percent by weight of an alpha, beta-ethylenically unsaturated carboxylic acid, and
   3. at least one other ethylenically unsaturated monomer containing a

$$CH_2{=}C\lessgtr \text{ group,}$$

wherein said interpolymer is solubilized by neutralizing at least a portion of the carboxylic acid groups thereof with a base; and

B. from about 5 percent to about 50 percent by weight of interpolymer solids of a non-volatile water-soluble or water-dispersible polyether polyol or polyester polyol having a molecular weight of at least 300.

4,065,417
REVERSIBLE SHEAR THINNING GEL FORMING COATING COMPOSITION FOR GLASS FIBERS
Robert Wong, Granville, and Homer G. Hill, Newark, both of Ohio, assignors to Owens-Corning Fiberglas Corporation, Toledo, Ohio
Continuation of Ser. No. 871,098, Oct. 9, 1969, abandoned, which is a division of Ser. No. 762,435, Sept. 25, 1968, Pat. No. 3,533,768, which is a continuation-in-part of Ser. No. 573,870, Aug. 22, 1966, abandoned. This application July 7, 1975, Ser. No. 593,601
Int. Cl.² C08L *1/00, 31/04, 63/02, 77/00*
U.S. Cl. 260—17.4 CL **7 Claims**

1. A composition consisting essentially of a polyvinyl acetate resin, an organosilane coupling agent, a gelling agent comprising cellulose, a lubricant comprising a polyethylene glycol and an inorganic liquid solvent for said polyvinyl acetate resin, said composition being a reversible, shear-thinning gel.

4,065,418
HIGH MOLECULAR WEIGHT ESTERS OF α-ALKYL BRANCHED MONOCARBOXYLIC ACIDS
Harold C. Foulks, Jr., Newport, Ky.; Herbert G. Rodenberg, and Harold E. Mains, both of Cincinnati, Ohio, assignors to Emery Industries, Inc., Cincinnati, Ohio
Continuation-in-part of Ser. No. 517,332, Oct. 23, 1974, Pat. No. 3,988,330. This application July 9, 1976, Ser. No. 703,756
Int. Cl.² C08K *5/10;* **C08H** *3/00;* **C09F** *5/08;* **C11C** *3/02*
U.S. Cl. 260—23 XA **15 Claims**

1. An ester product derived from an aliphatic hydroxylic compound having 2 to 25 carbon atoms and 1 to 10 primary or secondary hydroxyl groups and α-alkyl branched aliphatic monocarboxylic acids having at least 25 carbon atoms obtained by the free radical addition of a short-chain aliphatic monocarboxylic acid having from 3 to 12 carbon atoms and an α-olefin containing 22 to 100 carbon atoms.

9. A thermoplastic composition containing 0.1 to 5 parts per 100 parts resin of an internal-external lubricant ester derived from (a) an aliphatic hydroxylic compound having 2 to 25 carbon atoms and 1 to 10 primary or secondary hydroxyl groups and (b) α-alkyl branched aliphatic monocarboxylic acids having at least 25 carbon atoms obtained by the free radical addition of a short-chain aliphatic monocarboxylic acid having 3 to 6 carbon atoms and an α-olefin containing 22 to 100 carbon atoms.

4,065,419
FLUORO-ELASTOMER COMPOSITION HAVING IMPROVED PROCESSABILITY
Yoshihiko Kawaguchi, 101-C-13, 1 chome, Momoyamadai, Suita, Osaka, Japan (565); Yoshimi Harada, 26, Minami Kibogaoka, Asahi, Yokohama, Kanagawa, Japan (241); Makoto Miki, 1140-162, Imaizumi, Kamakura, Kanagawa, Japan (247); Kanenari Gouda, 1-18-14, Kaminoge, Setagayaku, Tokyo, Japan (158); Masaharu Akiyama, 8-7 Sanocho, Yokosukashi, Kanegawa, Japan (238); Masayuki Tokura, 1193, Isogo, Isogo, Yokohama, Kanagawa, Japan (235), and Jun Kuroha, 4-14-12, Kugayama, Suginamiku, Tokyo, Japan (168)
Filed Oct. 15, 1976, Ser. No. 732,750
Claims priority, application Japan, Oct. 7, 1975, 50-120330
Int. Cl.² C08L *91/06*
U.S. Cl. 260—28.5 D **3 Claims**

1. A composition comprising a fluoro-elastomer and 0.1 to 10 parts by weight based on 100 parts by weight of the fluoro-elastomer of rice-bran wax.

4,065,420
METHOD FOR MAKING AQUEOUS POLYIMIDE ELECTROCOATING MIXTURES
John H. Lupinski, Scotia; Edith M. Boldebuck, and Wilson J. Barnes, both of Schenectady, all of N.Y., assignors to General Electric Company, Schenectady, N.Y.
Filed Dec. 17, 1975, Ser. No. 641,597
Int. Cl.² C08J *3/00*
U.S. Cl. 260—29.2 N **7 Claims**

1. A method for making an electrocoatable polyamide acid salt mixture having a high water content which comprises,
   1. heating a polyimide solution of a dipolar aprotic organic solvent having at least 15% by weight of polyimide, to a temperature in the range of between about 50° C to 150° C in the presence of a base whose ionization constant in water at 25° C has a value greater than 10^{-2}, until the viscosity of the resulting mixture is less than 4,000 centistokes at 25° C.
   2. adding sufficient water to the resulting mixture of (1) while its viscosity is less than 4,000 centipoises at 25° C, to produce a mixture having from 5% to 40% by weight of dipolar aprotic organic solvent, 40% to 95% by weight of water and 1 to 15% by weight of solids, where the total weight of solids, water and dipolar aprotic solvent is equal to 100%, and the base is utilized in the solution of (1) at a concentration which is sufficient to neutralize any carboxy radicals of the polyimide, while providing from 0.01 to about 1 meq of base/g of polyimide having a MW sufficient to produce a viscosity of at least 1,000 centristokes at 25° C in N-methylpyrrolidone when present at 25% by weight solids.

4,065,421
CONTINUOUS PROCESS FOR THE PRODUCTION OF AQUEOUS UREA-FORMALDEHYDE SOLUTIONS
Charles L. Allyn, Tacoma; James C. Manlove, Federal Way; Gerald M. Chang, Orting, and Robert C. Burmark, Tacoma, all of Wash., assignors to Reichhold Chemicals, Inc., White Plains, N.Y.
Filed Mar. 17, 1976, Ser. No. 667,702
Int. Cl.² C08L *61/24*
U.S. Cl. 260—29.4 R **11 Claims**

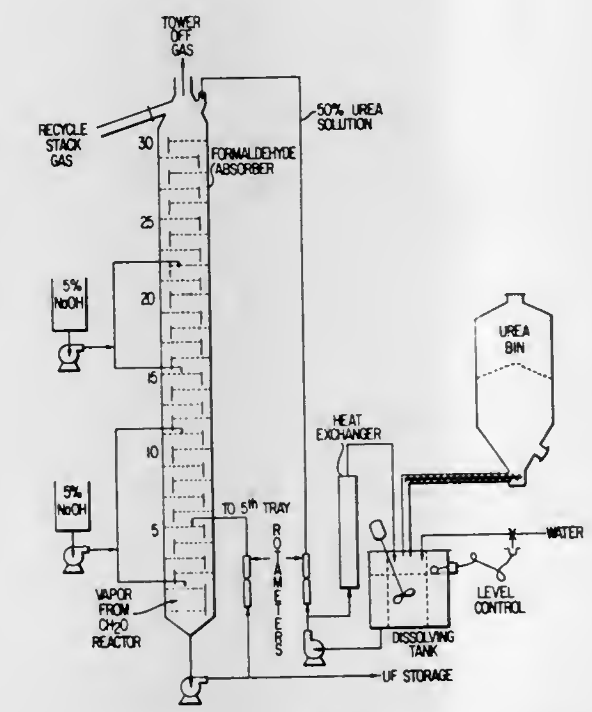

UREA FORMALDEHYDE ABSORBTION SYSTEM

1. A continuous process for the production of aqueous urea-formaldehyde solutions having a mol ratio of formaldehyde to urea ranging from about 4.0 to about 6.0 and having a total solids content ranging from about 65% to about 85% by weight comprising (A) introducing the gases from a formaldehyde converter into the bottom of a single formaldehyde absorber column and (B) allowing said gases to pass upwardly through said column while (C) simultaneously feeding an aqueous solution of urea containing from about 40% to about 80% by weight of urea into the top stage of said column and (D) allowing said aqueous solution of urea to at least partially react with the CH_2O in said gases to form an aqueous solution of low molecular weight urea-formaldehyde addition products while flowing down said column from stage to stage at a temperature ranging from about 25° C to about 80° C while (E) simultaneously feeding a dilute aqueous solution of base into said column at a multiple of points such that the pH of said aqueous solution of methylol-ureas is maintained at a pH ranging from about 6.0 to 9.0 and (F) collecting said aqueous solution of methylol-ureas in the bottom of said column (G) circulating a portion of said aqueous solution of urea-formaldehyde addition products from the bottom of said column back into said column at a point above the last point where the dilute aqueous base is being fed into said column and above the point where said gases are being introduced but below the top stage of said column (H) continuously removing the remainder of said aqueous solution of urea formaldehyde addition products from the bottom of the said column (I) while continuing to feed said aqueous solution of urea into the top stage of said column while (J) continuing to introduce said gases into the bottom of said column.

4,065,422
HIGH SLIP POLYMER COMPOSITION CONTAINING A POLYACRYLAMIDO SULFONIC ACID SALT AND AN ALCOHOL
Larry D. Lundmark, Richfield; Allan Melby, Andover, and Ho-ming Chun, New Brighton, all of Minn., assignors to General Mills Chemicals, Inc., Minneapolis, Minn.
Filed Feb. 16, 1977, Ser. No. 769,353
Int. Cl.² C08L *33/02*
U.S. Cl. 260—29.6 E **7 Claims**

1. A composition of matter which imparts lubricity comprising:
   a. from about 0.01% to about 50% by weight of a homopolymeric salt of

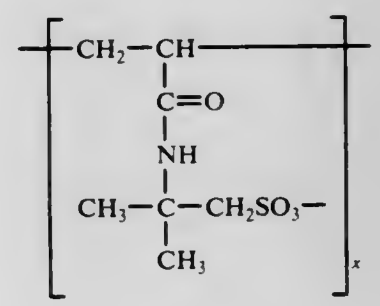

   wherein x has a value such that the molecular weight of the anionic portion of the polymer is from about 1,000,000 to about 5,000,000, and;
   b. from about 1% to about 99.99% by weight of a monohydric alcohol wherein the pH of the composition is from about 3 to about 10.

4,065,423
PAPER COATING LATEX COMPOSITIONS CONTAINING COPOLYMERS OF MONOVINYLIDENE AROMATIC MONOMER, ALIPHATIC CONJUGATED DIENE AND AN ARYLOYLOXYCARBOXYLIC ACID MONOMER
John Hen, Cheshire, Conn., assignor to Uniroyal, Inc., New York, N.Y.
Filed May 3, 1976, Ser. No. 682,811
Int. Cl.² C08L *9/00*
U.S. Cl. 260—29.7 H **20 Claims**

1. A latex of a copolymer of a monomeric mixture containing, by weight:
   A. 35 to 75 parts of a monovinylidene aromatic monomer;
   B. correspondingly 65 to 25 parts of an aliphatic conjugated diene, per 100 parts of (A) plus (B), said monomers (A) plus (B) constituting from 75 to 99.5% of the total monomeric mixture;
   C. 0.5 to 10% of a monomer having the formula

$$H_2C{=}\underset{\displaystyle R_1}{\underset{|}{C}}-\overset{}{\underset{\displaystyle O}{\underset{\|}{C}}}-O-R_2$$

wherein R_1 is hydrogen or an alkyl radical having 1 to 6 carbon atoms and R_2 is:

i.

$$-C_nH_{2n}-\overset{\overset{\displaystyle O}{\|}}{C}-OH\,,$$

where n is 1 to 6;

ii.

$$-[(CH_2)_x\overset{\overset{\displaystyle O}{\|}}{C}-O]_y-H\,,$$

where x is 1 to 4 and y is 2 to 4; or

iii.

$$-C_aH_{2a}-O-\overset{O}{\overset{\|}{C}}-C_bH_{2b}-\overset{O}{\overset{\|}{C}}-OH\,,$$

where *a* and *b* are the same or different and are from 1 to 4; and

D. optionally 0 to 15% of one or more different hydrophilic monomers, said latex being characterized by improved stability.

4,065,424

LACTONES AND ESTER DERIVATIVES THEREOF

Joe B. Lavigne, Oakland, Calif., assignor to Chevron Research Company, San Francisco, Calif.

Division of Ser. No. 549,612, Feb. 13, 1975. This application Jan. 11, 1977, Ser. No. 758,389

Int. Cl.² C08K *5/12*

U.S. Cl. 260—31.8 DB **1 Claim**

1. Polyvinyl chloride plastic compositions containing amounts sufficient to impart plasticizing properties of the cyclic keto esters of spirodilactones from alkenyl or alkyl bis(succinic anhydride) having the formula

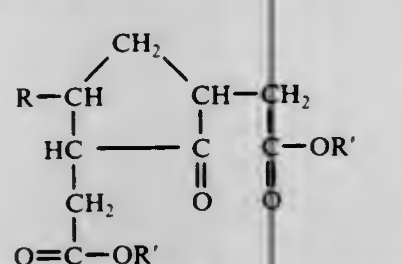

in which R is alkyl or alkenyl of 2 to 28 carbon atoms and R′ groups, which may be the same or different, are hydrogen or alkyl groups of 1 to 8 carbon atoms each.

4,065,425

PROCESS FOR THE PREPARATION OF NON-AQUEOUS DISPERSION COATINGS

George W. Bussell, Dearborn, and Martin W. Kisel, Dearborn Heights, both of Mich., assignors to Inmont Corporation, New York, N.Y.

Continuation of Ser. No. 446,610, Feb. 28, 1974, abandoned. This application Oct. 30, 1975, Ser. No. 627,092

Int. Cl.² C08K *5/01, 5/05, 5/06, 5/10*

U.S. Cl. 260—33.6 EP **10 Claims**

1. The method of preparing a storage stable, pigmented, non-aqueous dispersed polymer coating composition comprising:

a. preparing a volatile organic solvent solution containing 40 to 60% by weight of a stabilizer copolymer consisting essentially of

A. 40 to 70% of at least one solubilizing monomer of the group consisting of alkyl and cycloalkyl esters of acrylic and methacrylic acids and alcohols wherein the alkyl or cycloalkyl groups contain 4 or more carbon atoms,

B. 15 to 20% by weight of a reactive group containing monomer of the group consisting of hydroxyethyl, hydroxypropyl and glycidyl esters of acrylic and methacrylic acids,

C. 0.5 to 1.5% by weight of an α, β-unsaturated carboxylic acid and

D. 15 to 20% by weight of styrene or a derivative of styrene and by copolymerizing (A), (B), (C) and (D) in a volatile solvent comprised predominantly of aliphatic hydrocarbons having a boiling point in the range of 130° to 140° C.

b. forming a composition comprising a dispersion of copolymer in the solution of stabilizer copolymer of (a) by copolymerizing a monomer mixture in said solution, said monomer mixture consisting of

1. 10 to 30% by weight of a reactive group containing monomer of the group consisting of hydroxyethyl, hydroxypropyl and glycidyl esters of acrylic and methacrylic acids,

2. 0 to 3% by weight of an α, β-unsaturated carboxylic acid,

3. 30 to 80% by weight of a lower alkyl ester of acrylic or methacrylic acid and

4. 0 to 50% by weight of styrene or a derivative of styrene,

and the total solids in said composition consists of 50–90% by weight of dispersed copolymer and 10 to 50% by weight of dissolved polymer and

c. mixing the dispersion obtained in (b) with pigment and aminoplast resin to obtain paint composition containing 30 to 50 % solids with a resin to pigment ratio of from about 50 to 1 to about 3.5 to 1.

4,065,426

METHOD FOR THE PREPARATION OF POWDERED RUBBER

Takeshi Yamawaki, Hiratsuka; Takanori Uchida, Machida, and Makoto Nakajima, Tokyo, all of Japan, assignors to Mitsubishi Chemical Industries, Ltd., Tokyo, Japan

Filed May 28, 1976, Ser. No. 690,905

Claims priority, application Japan, July 16, 1975, 50-86827

Int. Cl.² C08J *3/20;* **C08K** *3/04, 5/01*

U.S. Cl. 260—33.6 AQ **13 Claims**

1. A method for preparing powdered rubber comprising the steps of: (a) adding a coagulant to a rubber latex to obtain crumbs of the rubber (b) mixing said crumbs with a rubber latex and an aqueous carbon black slurry in an amount of 100 – 1000 parts by weight of carbon black per 100 parts by weight of the rubber component in the second-mentioned rubber latex; said weight of rubber component in the second conventional rubber latex being 0.5 – 50 wt. % of the rubber component of said crumbs from set (a), (c) treating the resulting mixture in the presence of a coagulant; and (d) separating the thus treated crumbs from the serum and drying the separated crumbs.

4,065,427

POLYCHROMOPHORIC HETEROCYCLIC ULTRAVIOLET STABILIZERS AND THEIR USE IN ORGANIC COMPOSITIONS

David M. Pond; Richard H. S. Wang, and Gether Irick, Jr., all of Kingsport, Tenn., assignors to Eastman Kodak Company, Rochester, N.Y.

Division of Ser. No. 523,628, Nov. 14, 1974, Pat. No. 4,000,148. This application Oct. 7, 1976, Ser. No. 730,120

Int. Cl.² C08K *5/35*

U.S. Cl. 260—45.8 NT **20 Claims**

1. An organic composition susceptible to ultraviolet light degradation stabilized against such degradation with a stabilizing amount of at least one aromatic ester compound having the formula:

$$A-O\overset{O}{\overset{\|}{C}}-B$$

wherein A is a group having the structure:

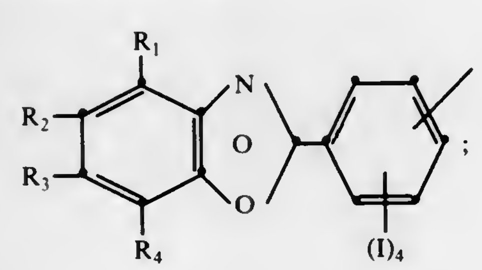

-continued

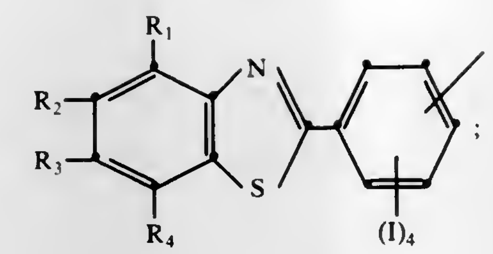

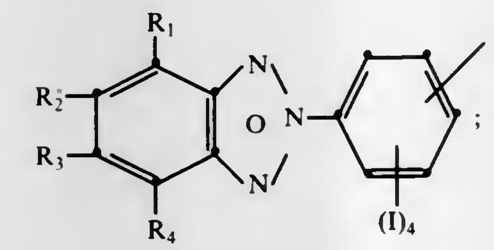

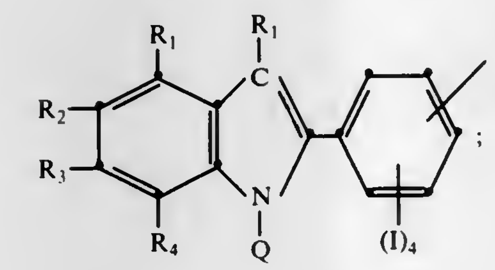

or

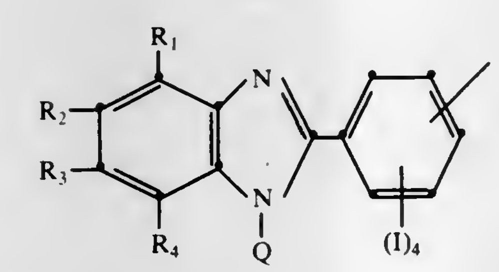

and B is a group having the structure:

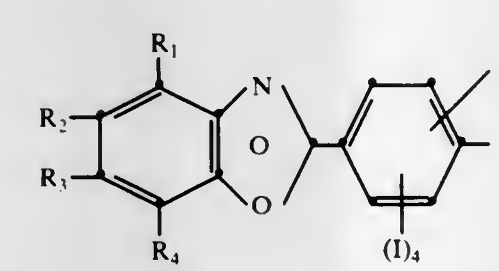

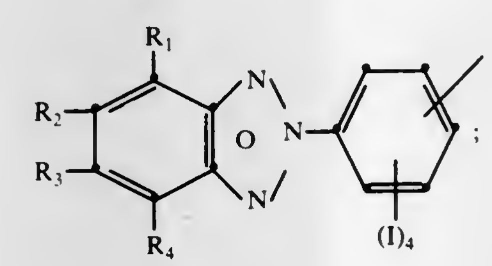

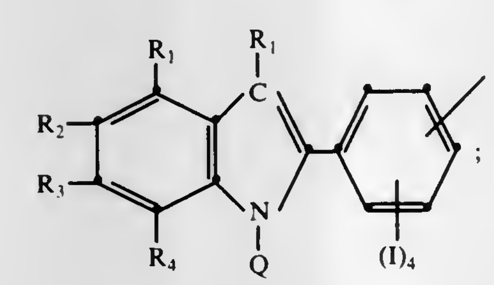

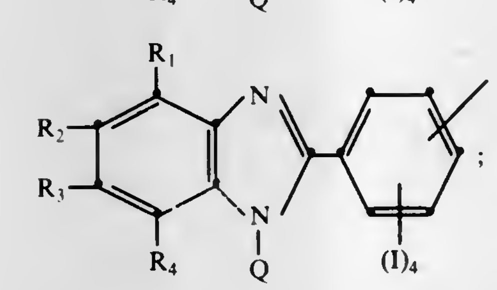

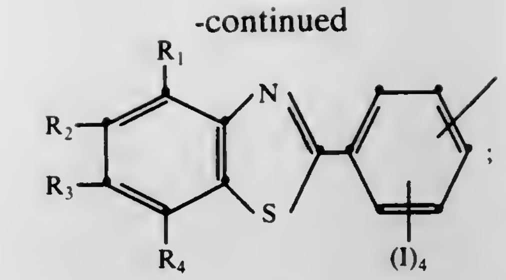

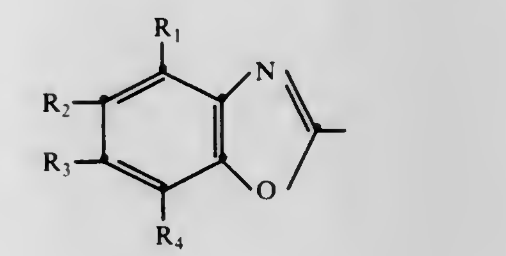

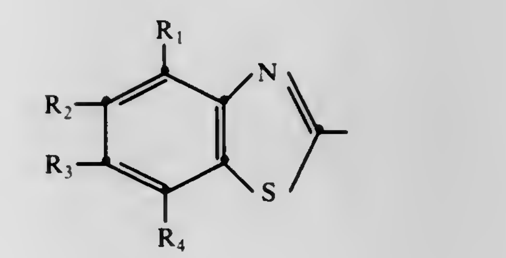

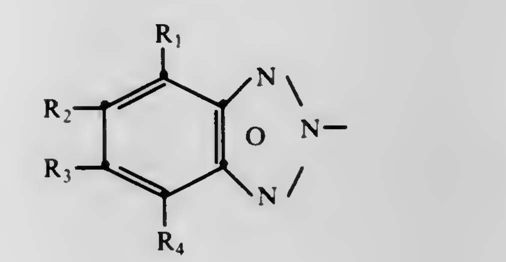

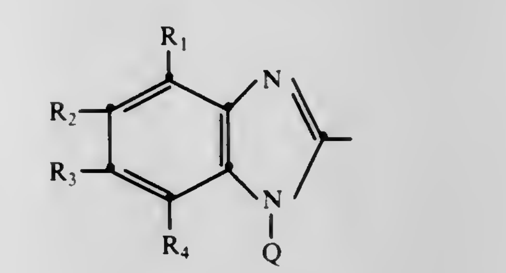

or

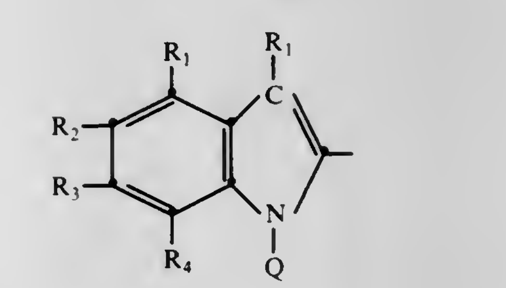

wherein

Q is a hydrogen atom or an alkyl group having 1 to 12 carbon atoms;

R_1, R_2, R_3 and R_4 are hydrogen, lower alkyl, phenyl, chlorine, bromine, lower alkyl phenyl, lower alkyloxy, carboxy, nitrile;

I is the same as R_1, R_2, R_3 and R_4, and is present on all positions of the benzenoid ring, except the carbon atom attached to the Y substituent and the carbon atoms attached to the carboxyl group connecting the heterocyclic aromatic A group with the heterocyclic aromatic B group.

4,065,428

POLYMETHYLMETHACRYLATE BASED MOLDING COMPOSITIONS

Gary L. Deets, Springfield, Mass., assignor to Monsanto Company, St. Louis, Mo.

Filed Dec. 5, 1975, Ser. No. 637,926

Int. Cl.² C08K *3/20;* **C08L** *51/04*

U.S. Cl. 260—45.75 B **11 Claims**

1. A polyblend molding composition comprising:

A. from 45 to 84 percent by weight bsed on the total weight of the polyblend of a polymethylmethacrylate polymer which contains from 0 to 40 percent by weight based on the weight of the matrix polymer of a halogenated comonomer;

B. from 10 to 40 percent by weight based on the total weight of the polyblend of a polychloroprene rubber component, calculated as ungrafted rubber, which is grafted with from 10 to 100 parts, per hundred parts of rubber, of polymethylmethacrylate which contains from 0 to 40 percent by weight, based on the weight of the polymethylmethacrylate graft copolymer of a halogenated comonomer; and

C. from 6 to 15 percent by weight based on the total weight of the polyblend of a flame retardant additive;

provided that the total amount of halogen in the polyblend due to the polychloroprene rubber component and the halogenated comonomer is at least 9.0 percent by weight; and wherein the polyblend exhibits a UL-94 rating of at least V-1 and smoke evolution of less than 300 D_m (Flaming).

4,065,429
PLASTIC COMPOSITIONS
Arnold L. Anderson, Alma, Mich., assignor to Velsicol Chemical Corporation, Chicago, Ill.
Filed Feb. 8, 1973, Ser. No. 330,805
The portion of the term of this patent subsequent to Aug. 30, 1994, has been disclaimed.
Int. Cl.^{2} C08L *23/02*
U.S. Cl. 260—45.95 G **14 Claims**

1. A plastic composition comprising polyolefins and a flame retardant, said flame retardant consisting of a compound having the formula

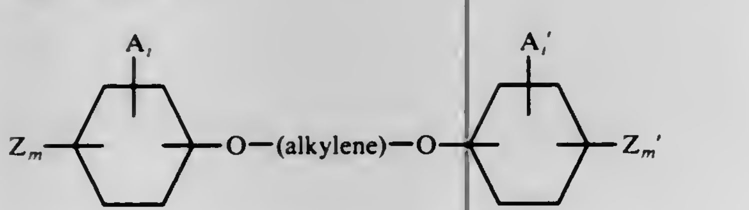
(I)

wherein Z is bromine; m is an integer having a value of 1–5 and m' is an integer having a value of 0–4; i is an integer having a value of 0–2 and i' is an integer having a value of 1–5; alkylene is a straight or branched chain alkylene group having from 1 to 6 carbon atoms; and A is chlorine.

4,065,430
FUNCTIONAL GROUP CONTAINING POLYMER AND METHOD OF PREPARING THE SAME
Masato Satomura, Asaka, Japan, assignor to Fuji Photo Film Co., Ltd., Minami-ashigara, Japan
Division of Ser. No. 441,782, Feb. 12, 1974, Pat. No. 3,933,885. This application Oct. 9, 1975, Ser. No. 621,103
Claims priority, application Japan, Feb. 13, 1973, 48-177163
Int. Cl.^{2} C08F *118/00*
U.S. Cl. 260—47 UA **9 Claims**

1. A functional group containing polymer containing 1 to 90 mol percent of the monomer unit represented by the general formula (I)

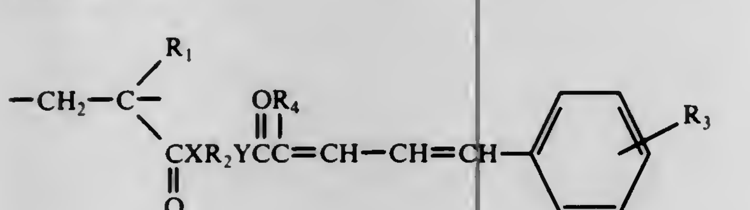
(I)

wherein R_1 represents a hydrogen atom or a methyl group; R_2 represents a divalent group having a total of 2 to 10 carbon atoms; R_3 is a hydrogen atom, a halogen atom, a methoxy group, a nitro group or a methyl group; R_4 is a hydrogen atom, a cyano group or a carbamoyl group; X and Y each represents —O—; and R_5 represents a hydrogen atom, a methyl group or an ethyl group.

4,065,431
THERMALLY STABLE, RIGID POLYESTERS FROM AROMATIC DIBASIC ACIDS AND THERMALLY STABLE, RIGID DIOLS
August Henry Frazer, Wilmington, Del., assignor to E. I. Du Pont de Nemours and Company, Wilmington, Del.
Filed Dec. 16, 1976, Ser. No. 751,087
Int. Cl.^{2} C08G *63/66*
U.S. Cl. 260—47 C **9 Claims**

1. The thermally stable, rigid polyesters of the formula

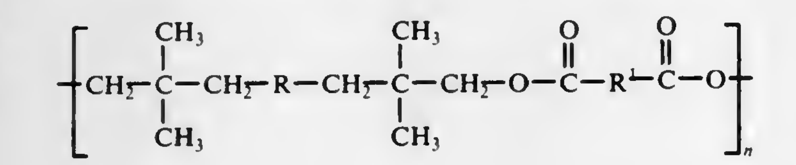

where R is an arylene selected from the group consisting of 1,4-phenylenes, 4,4'-biphenylenes and 2,6-naphthylenes, said arylene being unsubstituted or substituted with halo, lower alkyl or phenyl,

R^1 is an arylene selected from the group consisting of 1,4-phenylenes, 4,4'-biphenylenes, 4,4'-biphenyleneoxides, and 2,6-naphthylenes, said arylene being unsubstituted or substituted with halo, lower alkyl or phenyl; and

n is at least 10.

4,065,432
THERMALLY STABLE, RIGID POLYESTERS FROM AROMATIC DIBASIC ACIDS AND THERMALLY STABLE, RIGID BISPHENOLS
August Henry Frazer, Wilmington, Del., assignor to E. I. Du Pont de Nemours and Company, Wilmington, Del.
Filed Dec. 16, 1976, Ser. No. 751,088
Int. Cl.^{2} C08G *63/18, 63/68*
U.S. Cl. 260—47 C **9 Claims**

1. The thermally stable, rigid, ordered polyesters of the formula

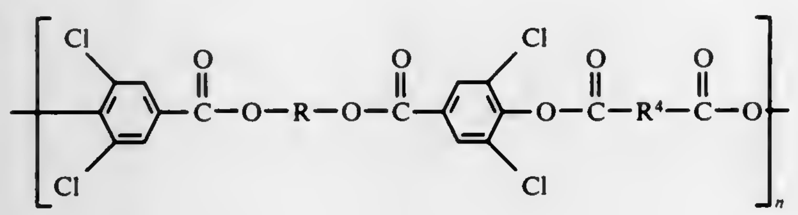

where R is

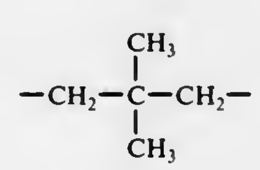

or

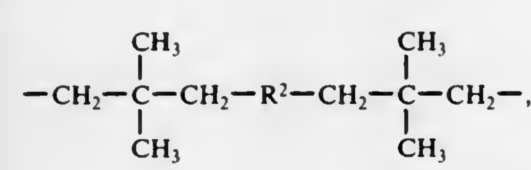

where

R^2 is an arylene selected from the group consisting of 1,4-phenylenes, 4,4'-biphenylenes, and 2,6-naphthylenes, said arylene being unsubstituted or substituted with halo, lower alkyl or phenyl,

R^4 is an arylene selected from the group consisting of 1,4-phenylenes, 4,4'-biphenylenes, 4,4'-biphenylene oxides, and 2,6-naphthylenes, said arylene being unsubstituted or substituted with halo, lower alkyl or phenyl, and

n is at least 10.

4,065,433
PROCESS FOR THE MANUFACTURE OF POLYADDITION PRODUCTS CONTAINING IMIDE GROUPS
Albrecht Muller, Allschwil; Theobald Haug, Frankendorf, and Alfred Renner, Munchenstein, all of Switzerland, assignors to Ciba-Geigy Corporation, Ardsley, N.Y.
Filed Dec. 18, 1974, Ser. No. 534,104
Claims priority, application Switzerland, Dec. 21, 1973, 18051/73; Dec. 21, 1973, 18052/73; Feb. 7, 1974, 1769/74; Feb. 7, 1974, 1770/74
Int. Cl.^{2} C08G *73/12, 73/16*
U.S. Cl. 260—47 UA **61 Claims**

1. Process for the manufacture of polyaddition products containing imide groups, said process comprising reacting polyimides which contain, per molecule, at least two radicals of the general formula

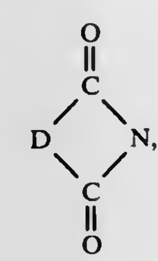
(I)

in which D denotes a divalent radical containing a carbon-carbon double bond, with polyhydric alcohols in the presence of basic compounds selected from the group consisting of primary polyamines, basic catalysts, and mixtures of primary polyamines and basic catalysts at temperatures between 50° and 280° C.

4,065,434
METHOD OF PREPARING HIGH MOLECULAR WEIGHT POLYPHENOXY ETHERS FROM ALKYL PHENOLS
Thomas F. Rutledge, Wilmington, Del., assignor to ICI Americas Inc., Wilmington, Del.
Filed Jan. 12, 1977, Ser. No. 758,827
Int. Cl.^{2} C08G *65/44*
U.S. Cl. 260—47 ET **17 Claims**

1. In a method of preparing a high molecular weight polyphenoxy ether of an "alkyl phenol", said method comprising contacting a solution of the alkyl phenol with oxygen or an oxygen carrying gas in the presence of an alkaline material selected from the group consisting of alkali metal alkoxides hydroxides and alkali metal carbonates, the improvement which comprises reacting the alkyl phenol in the presence of a catalyst containing mixed oxides of manganese, chromium, and copper supported on activated or precipitated alumina in which the metals are present by weight of the catalyst from about 5 to 25 percent chromium, 3 to 15 percent copper and in which the weight ratio range of manganese to chromium is 1.9–0.9 to 1.

4,065,435
WATER-SOLUBLE POLYMERS AND PROCESS FOR PRODUCING THE SAME
Shinji Sakaguchi; Shinichi Imai; Junn Yamaguchi, and Nobuo Tsuji, all of Minami-ashigara, Japan, assignors to Fuji Photo Film Co., Ltd., Minami-ashigara, Japan
Division of Ser. No. 535,657, Dec. 23, 1974, abandoned. This application June 9, 1976, Ser. No. 694,424
Claims priority, application Japan, Dec. 21, 1973, 48-3111
Int. Cl.^{2} C08F *8/00, 8/28, 8/30*
U.S. Cl. 260—47 UP **10 Claims**

1. A water soluble homopolymer or copolymer containing in its main chain recurring units of the formula (I):

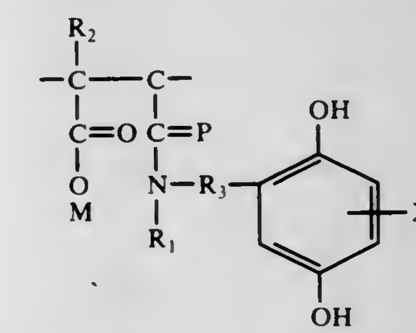

or the formula (II):

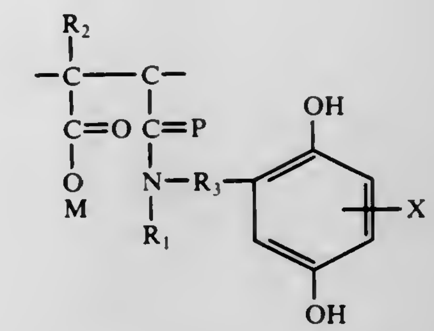
(II)

wherein X represents a hydrogen atom, a halogen atom, an alkyl group, an allyl group or an aryl group; R_1 represents a hydrogen atom or an alkyl group; R_2 represents a hydrogen atom, an alkyl group or an aryl group; R_3 represents a divalent group selected from the group consisting of a straight chain alkylene group having 1 to 8 carbon atoms; a branched chain alkylene group having 1 to 8 carbon atoms; an arylene group and a group having the formula:

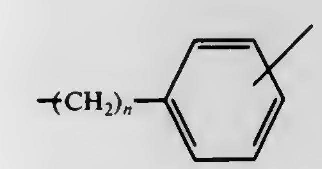

wherein n is an integer of 1 to 4; and M is selected from the group consisting of a hydrogen atom, an alkali metal atom and a quaternary ammonium group.

4,065,436
THERMOPLASTIC POLYCARBONATE MOULDING COMPOSITIONS WITH IMPROVED EASE OF MOULD RELEASE
Siegfried Adelmann; Dieter Margotte; Hugo Vernaleken, and Werner Nouvertne, all of Krefeld, Germany, assignors to Bayer Aktiengesellschaft, Leverkusen, Germany
Filed July 30, 1976, Ser. No. 710,069
Claims priority, application Germany, May 7, 1976, 2620257
Int. Cl.^{2} C08L *69/00*
U.S. Cl. 260—47 XA **7 Claims**

1. A thermoplastic moulding composition comprising a thermoplastic aromatic polycarbonate based on an aromatic dihydroxy compound having a mean weight-average molecular weight, M_w, of at least 10,000 and containing 0.01 to 0.5%

by weight of an ester of a saturated aliphatic carboxylic acid with 10 to 20 C atoms per molecule and an aromatic hydroxy compound with 1 to 6 hydroxyl groups.

4,065,437
AROMATIC POLYETHER-SULFONES
Gerd Blinne, Freinsheim, and Claus Cordes, Weisenheim, both of Germany, assignors to BASF Aktiengesellschaft, Ludwigshafen, Germany
Filed Oct. 12, 1976, Ser. No. 731,127
Claims priority, application Germany, Nov. 5, 1975, 2549529
Int. Cl.² C08G *2/18, 8/02, 63/66, 65/40*
U.S. Cl. 260—49 **7 Claims**

1. An aromatic polyethersulfone having repeating units of the formula (Ia)

(Ia),

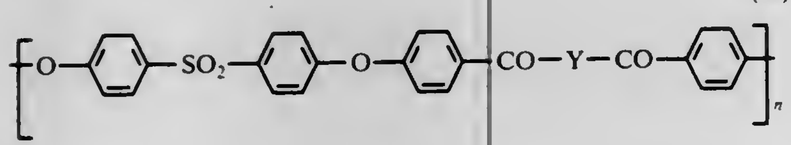

where Y is selected from the group consisting of

(II)

and

(III),

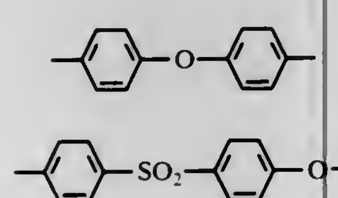

individual Y's being identical or different, n is an integer of from 20 to 250, and the terminal groups being selected from the group consisting of hydroxy, alkoxy of 1 to 5 carbon atoms, F and Cl.

4,065,438
PROCESS FOR PRODUCTION ACID POLYESTER RESINS AND POWDER COATING PRODUCTS PREPARED FROM SAID RESINS
Jozef Verborgt, Brussels, Belgium, assirnor to Labofina S. A., Brussels, Belgium
Filed Feb. 1, 1977, Ser. No. 764,902
Claims priority, application Belgium, Feb. 2, 1976, 163996
Int. Cl.² C08G *63/12*
U.S. Cl. 260—75 R **5 Claims**

1. Process for producing acid polyester resins which are used to manufacture coating products by reaction with an epoxy resin, said polyester acid resins being produced from a prepolymer having a hydroxyl index comprised between 40 and 200, said prepolymer being prepared from at least one divalent aliphatic alcohol and a mixture of organic acids, this process being characterized by the fact that said mixture of organic acids comprises from 10 to 100% by weight of terephthalic acid, from 0 to 90% by weight of isophthalic acid and from 0 to 20% by weight of trimellitic acid or its anhydride, and that the acid polyester resin is prepared by reacting said prepolymer with isophthalic acid, said acid polyester resin having an acid index comprised between 50 and 100.

4,065,439
COPOLYESTER AND PROCESS FOR THE PRODUCTION THEREOF
Keiichi Uno, and Takahito Miyagawa, both of Otsu, Japan, assignors to Toyobo Co., Ltd., Otsu, Japan
Filed June 10, 1975, Ser. No. 585,753
Int. Cl.² C08G *63/18*
U.S. Cl. 260—75 R **6 Claims**

1. A copolyester derived from:
a. terephthalic acid or an ester-forming derivative thereof,
b. isophthalic acid or an ester-forming derivative thereof,
c. an aliphatic dicarboxylic acid of the formula:

$$HOOC-(CH_2)_n-COOH$$

wherein n is an integer of 4 to 7, inclusive, or an ester-forming derivative thereof,
d. ethylene glycol, and
e. neopentyl glycol,

wherein the molar ratios of the components in the copolyester are as follows:

$$50/50 \leqq [(a)+(b)]/(c) \leqq 75/25$$

$$30/70 \leqq (a)/(b) \leqq 70/30$$

$$40/60 \leqq (d)/(e) \leqq 80/20.$$

4,065,440
MALONATE ESTER CHAIN COUPLING OF POLYESTERS
Carl Serres, Jr., Naperville, Ill., assignor to Standard Oil Company (Indiana), Chicago, Ill.
Filed Aug. 9, 1976, Ser. No. 712,541
Int. Cl.² C08G *63/18, 63/46*
U.S. Cl. 260—75 R **10 Claims**

1. The method of increasing the molecular weight of polyesters which comprises forming a composition comprising a polyester having an I.V. of at least 0.2 dl/g and 0.1 to 10 parts by weight of a compound having two or three alkylidene malonate groups per 100 parts by weight of said polyester and reacting said polyester and compound under melt or solid state polymerization conditions.

4,065,441
COPOLYAMIDE FROM ARYLENE DIAMINE AND MIXTURE OF ALKYLENE DICARBOXYLIC ACIDS
Philip S. Andrews, Hamden; William J. Farrissey, Jr., Northford; Besir K. Onder, North Haven, and James N. Tilley, Cheshire, all of Conn., assignors to The Upjohn Company, Kalamazoo, Mich.
Filed Mar. 8, 1976, Ser. No. 664,763
Int. Cl.² C08G *69/20*
U.S. Cl. 260—78 R **7 Claims**

1. A fiber forming injection moldable copolyamide consisting essentially of the recurring unit.

$$-\overset{\overset{\displaystyle O}{\|}}{C}-(CH_2)_x-\overset{\overset{\displaystyle O}{\|}}{C}-NH-Ar-NH-$$

wherein x in 50 percent to 85 percent of the recurring units represents an integer from 6 to 10, inclusive, and in 15 percent to 50 percent of the recurring units x is 4, and Ar is 4,4'-methylenediphenylene.

4,065,442
PYROLYSIS COMPOSITIONS FROM SILVER SALTS OF POLYCARBOXYLIC ACIDS
Ellis K. Fields, River Forest; Wilford J. Zimmerschied, and David A. Palmer, both of Naperville, all of Ill., assignors to Standard Oil Company, Chicago, Ill.
Filed Oct. 31, 1974, Ser. No. 519,640
Int. Cl.² B01J *23/50*
U.S. Cl. 260—78.41 **17 Claims**

1. A process for producing high surface area compositions with predetermined structure which comprises pyrolyzing at a decomposition temperature within the range of from about 200° to 500° C polysilver salts of polycarboxylic acids containing two to eight carboxyl groups comprising at least one member selected from the group consisting of aromatic polycarboxylic acids and heterocyclic polycarboxylic acids.

4,065,443
VULCANIZATION OF RUBBER WITH PHOSPHINOTHIOYL AMINO SULFIDES
Robert H. Campbell, and Raleigh W. Wise, both of Akron, Ohio, assignors to Monsanto Company, St. Louis, Mo.
Filed July 15, 1976, Ser. No. 705,672
Int. Cl.² C08F *28/00*
U.S. Cl. 260—79.5 B **18 Claims**

1. A process for vulcanizing rubber which comprises heating a sulfur-vulcanizable diene rubber composition containing sulfur-vulcanizing agent and an accelerating amount of a compound of the formula

$$(RO)_2-\overset{\overset{\displaystyle S}{\|}}{P}-S-NHR_1$$

in which R and R_1 independently are alkyl of 1 to 12 carbon atoms, cycloalkyl of 5-8 carbon atoms, alkaryl of 7 to 10 carbon atoms, phenyl or mono- or di-lower alkyl substituted phenyl.

4,065,444
GRAFT COPOLYMER ON BUTADIENE-PIPERYLENE ELASTOMER
Edward A. Delaney, Woodbury, Conn.; Norman J. Pinkowski, St. Louis, Mo., and Walter Nudenberg, Newtown, Conn., assignors to Uniroyal, Inc., New York, N.Y.
Division of Ser. No. 454,992, March 25, 1974, abandoned. This application Sept. 2, 1975, Ser. No. 609,458
Int. Cl.² C08F *279/04, 36/06*
U.S. Cl. 260—880 R **2 Claims**

1. A graft copolymer of resin-forming monomeric material onto a spine which is an elastomeric copolymer of butadiene-1,3 and piperylene, the butadiene-1,3being found in at least 70% cis-1,4-addition and less than 10% vinyl-1,2-addition, said spine copolymer containing from about 5 to about 80 weight percent of piperylene and from about 95 to about 20 weight percent of butadiene, the piperylene units being incorporated in the approximate ratio of

$$1,4/1,2 = 2$$

the ratio of resin-forming monomeric material to spine copolymer being within the range of from 60:40 to 80:20 by weight, and the said resin-forming monomeric material being a mixture of styrene and acrylonitrile.

4,065,445
PREGNANCY-SPECIFIC β_1-GLYCOPROTEIN AND PROCESS FOR ISOLATING IT
Hans Bohn, Marburg, Marbach, and Ferdinand Stutzinger, Waldstetten, both of Germany, assignors to Behringwerke Aktiengesellschaft, Marburg, Lahn, Germany
Continuation-in-part of Ser. No. 292,735, Sept. 27, 1972, abandoned. This application Apr. 18, 1975, Ser. No. 569,476
Claims priority, application Germany, Sept. 29, 1971, 2148587; Nov. 20, 1971, 2157610
Int. Cl.² A23J *1/06*
U.S. Cl. 260—112 B **12 Claims**

1. A purified, isolated pregnancy-specific β_1-glycoprotein characterized by an electrophoretic migration speed in agar gel in the range of the β_1-globulins,
a sedimentation constant of 4.6 ± 0.5 S,
a molecular weight of 100,000 ± 15,000,
an extinction coefficient $E_{1cm}^{1\%}$ of 11.6 ± 0.5 (278 mμ; 1/15-molar phosphate buffer, pH 7.0),
a carbohydrate content of 28.05 ± 1.55%, comprising 10.7 ± 1.0% of hexoses, 10.0 ± 0.5% of hexosamine,
0.55 ± 0.05% of focose and 7.0 ± 0.5% of neuraminic acid.

4,065,446
REACTIVE DYESTUFFS CONTAINING UREA ALKYLENE LINKAGE BETWEEN CHROMOPHORE AND REACTIVE RADICAL
Hans-Samuel Bien, Burscheid, and Wolfgang Harms, Leverkusen, both of Germany, assignors to Bayer Aktiengesellschaft, Leverkusen, Germany
Filed Mar. 24, 1972, Ser. No. 237,920
Claims priority, application Germany, Mar. 24, 1971, 2114158
Int. Cl.² C09B *62/20, 62/22, 62/24, 62/26*
U.S. Cl. 260—146 D **14 Claims**

1. Reactive dyetuff of the formula

$$D-(CH_2)_n-\underset{\underset{\displaystyle X_1}{|}}{N}-CO-\underset{\underset{\displaystyle X_2}{|}}{N}-\text{Alkylene}-\underset{\underset{\displaystyle X_3}{|}}{N}-W$$

in which
W is a heterocyclic or aliphatic fiber reactive radical capable of reacting with an amino, amido or hydroxyl group on a fiber; which is bound to

$$-\underset{\underset{\displaystyle X_3}{|}}{N}-$$

by a carbon atom on W;
D is a radical of an aromatic ring containing organic dyestuff which is bound to $-(CH_2)_n-$ by an aromatic carbon on D; X_1 is hydrogen; C_1-C_4-alkyl; or C_1-C_4-alkyl substituted by hydroxyl, sulfo or sulfato;
X_2 and X_3 are hydrogen; C_1-C_4-alkyl; C_1-C_4-alkyl substituted by hydroxyl, sulfo or sulfato; cyclohexyl; phenyl; benzyl; phenethyl; or cyclohexyl, phenyl, benzyl or phenethyl substituted by hydroxyl, sulfo, carboxy, sulfamoyl or carbamoyl; or X_2 and X_3 together are $-CH_2-CH_2-$;
Alkylene is C_1-C_6-alkylene, $-CH_2-CH-(OH)-CH_2-$ or cyclohexylene; and n is 0 or 1.

4,065,447
AZO COMPOUNDS HAVING A 3-ARYLTHIO- OR ALIPHATICTHIO-4-CYANO- OR ALKOXYCARBONYL-PYRAZOLYL-5 DIAZO COMPONENT RADICAL
Armand Jotterand, Lancy, Switzerland, assignor to Sandoz Ltd., Basel, Switzerland
Filed Sept. 15, 1975, Ser. No. 613,391
Claims priority, application Switzerland, Sept. 17, 1974, 12629/74
Int. Cl.² C09B *29/06, 29/08, 29/36, 29/38*
U.S. Cl. 260—163 **14 Claims**

1. A monoazo dye of the formula

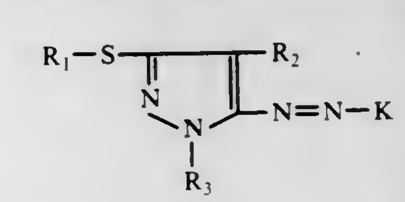

wherein
each of R_1 and R_3 is independently C_{2-4}alkenyl; C_{1-4}alkyl; C_{1-4}alkyl monosubstituted by hydroxy, cyano, C_{1-4}alkoxy, phenyl, phenoxy, chloro or bromo; phenyl or substituted phenyl having 1 to 3 substituents each of which is independently chloro, bromo, methyl, methoxy, ethoxy, cyano, nitro, methoxycarbonyl, ethoxycarbonyl, sulfamoyl, C_{1-4}alkylsulfamoyl or di-(C_{1-4}alkyl)sulfamoyl, with the proviso that the maximum number of substituents selected from the group consisting of methoxy, ethoxy, cyano and nitro is two and the maximum number of substituents selected from the group consisting of methoxycarbonyl,

ethoxycarbonyl, sulfamoyl, C_{1-4}alkylsulfamoyl and di-(C_{1-4}alkyl)sulfamoyl is one,

R_2 is cyano or (C_{1-4}alkoxy)carbonyl, and

K is a coupling component radical of the N-alkyl-aminobenzene, N,N-dialkylaminobenzene, α-N-alkyl-aminonaphthalene, α-N,N-dialkylaminonaphthalene, pyrazolone, 5-aminopyrazole or 3-cyano-4-alkyl-6-hydroxypyridone-2 series.

4,065,448

TERTIARY ALKYL SUBSTITUTED DISAZO PIGMENTS

Willy Muller, Riehen, Switzerland, assignor to Ciba-Geigy AG, Basel, Switzerland

Continuation-in-part of Ser. No. 526,021, Nov. 21, 1974, abandoned, which is a continuation-in-part of Ser. No. 365,664, May 31, 1973, abandoned, which is a continuation of Ser. No. 109,955, Jan. 26, 1971, abandoned. This application Dec. 10, 1975, Ser. No. 639,561

Claims priority, application Switzerland, Feb. 3, 1970, 1522/70

Int. Cl.² C09B *43/12*

U.S. Cl. 260—176 **4 Claims**

1. A disazo pigment of the formula

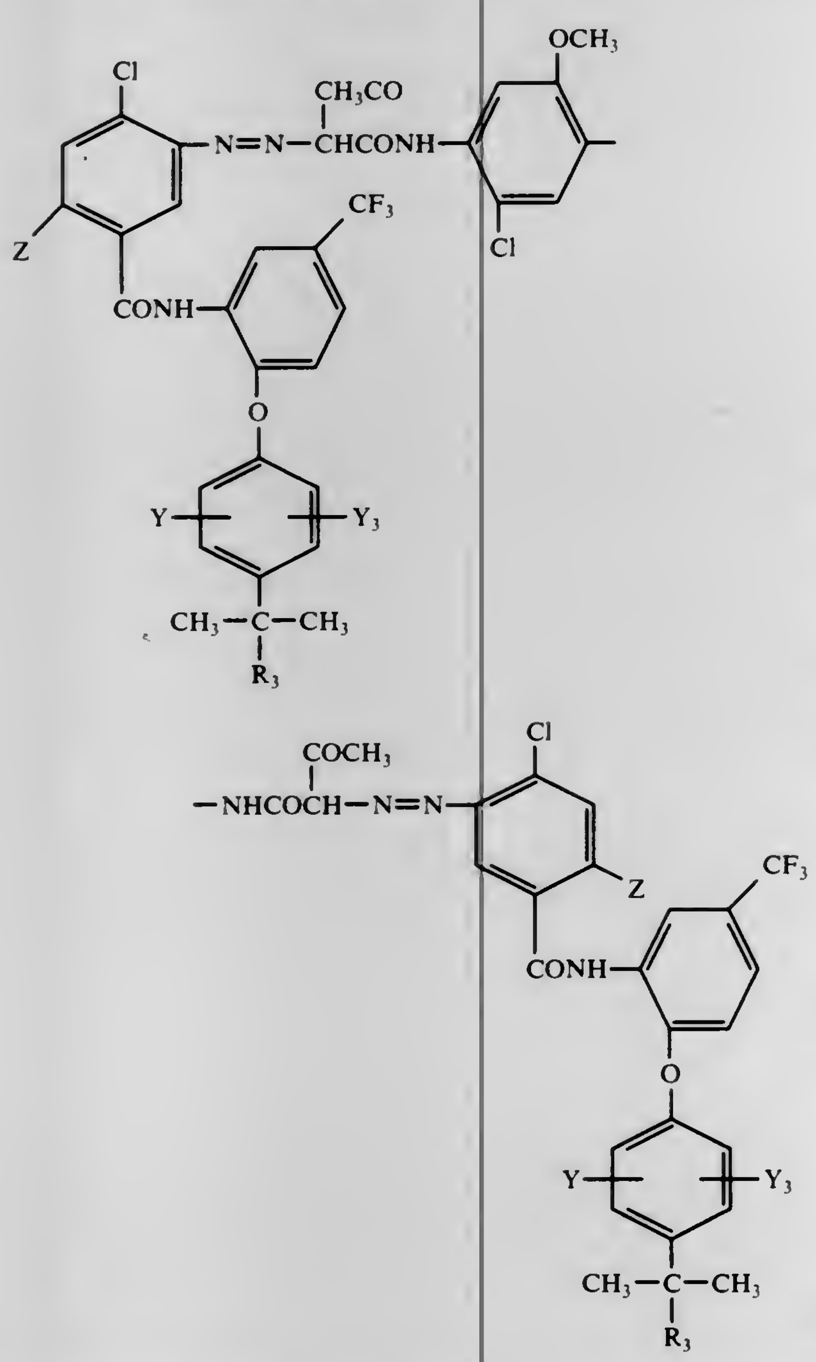

wherein R_3 is alkyl containing 2 to 6 carbon atoms, Y is hydrogen, chloro, or lower alkyl, Y_3 is hydrogen, or lower alkyl, and Z is hydrogen or chloro.

4,065,449

TETRACHLORO SUBSTITUTED DISAZO PIGMENTS

Georg Cseh, Arlesheim, Switzerland, assignor to Ciba-Geigy Corporation, Ardsley, N.Y.

Filed Dec. 10, 1975, Ser. No. 639,560

Claims priority, application Switzerland, Dec. 17, 1974, 16812/74

Int. Cl.² C09B *33/14*

U.S. Cl. 260—176 **1 Claim**

1. A disazo pigment of the formula

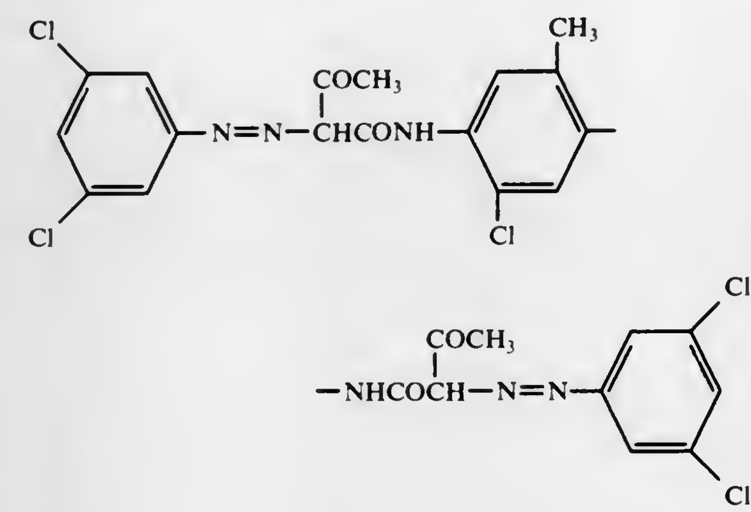

4,065,450

PROCESS FOR PREPARING 2-GUANIDINOMETHYL-PERHYDROAZOCINE-SULFATE

Jozsef Rakoczi; Ivan Beck; Csaba Kiss; Imre Horvath, and Miklos Nemes, all of Budapest, Hungary, assignors to Egyt Gyogyszervegyeszeti Gyar, Budapest, Hungary

Filed Feb. 26, 1976, Ser. No. 661,613

Claims priority, application Hungary, Feb. 27, 1975, EE 2313

Int. Cl.² C07D *223/04*

U.S. Cl. 260—239 B **3 Claims**

1. A novel process for preparing 2-guanidinomethyl-perhydroazocine-sulfate of formula I

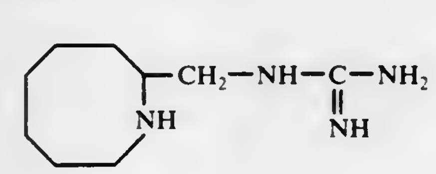

I

by catalytical reduction of 2-nitromethylene-perhydroazocine of formula IV

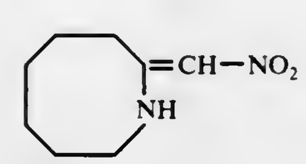

IV

and reacting the thus-obtained product with S-methyl-isothiocarbamide-sulfate, characterized in that the 2-nitromethylene-perhydroazocine is hydrogenated in solution in acetone at a temperature of 20 to 50° C, whereafter the separated reaction product is treated with an aqueous mineral acid and then reacted with the S-methyl-isothiocarbamid-sulfate.

4,065,451

1,3-DIHYDRO-3-HYDROXY-5-PHENYL-2H-1,4-BENZODIAZEPIN-2-ONE, SUBSTITUTED DIAMINO ACETATE ESTERS AND THEIR ACID SALTS

Ronald J. McCaully, Malvern; Abraham Nudelman, Bala Cynwyd, and Stanley C. Bell, Penn Valley, all of Pa., assignors to American Home Products, New York, N.Y.

Continuation-in-part of Ser. No. 129,638, March 30, 1971, abandoned. This application Feb. 4, 1972, Ser. No. 223,712

Int. Cl.² C07D *243/24, 403/12*

U.S. Cl. 260—239.3 D **12 Claims**

1. A compound selected from the group consisting of

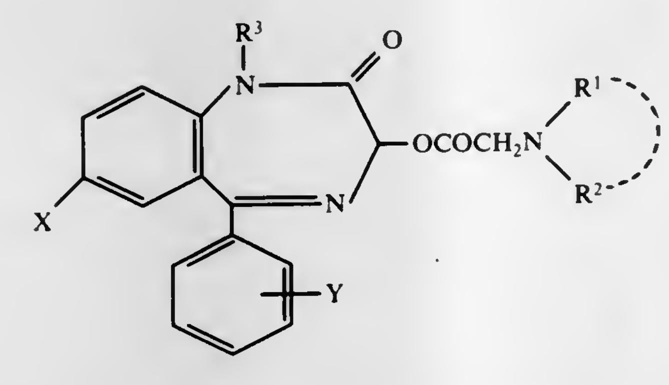

wherein

R^1 is a member selected from the group consisting of alkyl of 1 to 6 carbon atoms and hydrocarbyl aralkyl of 7 to 16 carbon atoms;

R^2 is a member selected from the group consisting of dialkylaminoalkyl of 3 to 18 carbon atoms, and hydrocarbyl diaralkylaminoalkyl of 14 to 32 carbon atoms;

R^1 and R^2, when taken together form a member selected from the group consisting of

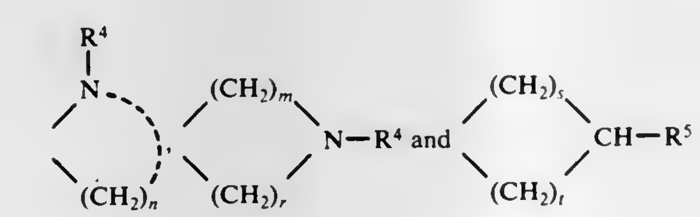

wherein R^4 is a member selected from the group consisting of alkyl of 1 to 6 carbon atoms, hydrocarbyl aryl of 6 to 10 carbon atoms, hydroxyalkyl of 1 to 6 carbon atoms, hydrocarbyl aralkyl of 7 to 16 carbon atoms and alkoxyalkyl of 2 to 12 carbon atoms;

R^5 is a member selected from the group consisting of alkylamino of 1 to 6 carbon atoms and piperidino; *n* is one of the integers 3, 4 or 5; *m* is one of the integers 1 or 2; *r* is one of the integers 2 or 3; *s* is an integer from 0 to 6; *t* is an integer from 0 to 6; with the proviso that the sum of s and t must be at least 3 and not more than 6;

R^3 is a member selected from the group consisting of hydrogen, alkyl of 1 to 6 carbon atoms, hydrocarbyl aralkyl of 7 to 12 carbon atoms and alkoxy alkyl of 2 to 12 carbon atoms;

X is a member selected from the group consisting of halogen, cyano, trifluoromethyl, nitro and alkylthio of 1 to 6 carbon atoms;

Y is a member selected from the group consisting of hydrogen, halogen, trifluoromethyl, nitro and alkylthio of 1 to 6 carbon atoms; and the pharmaceutically acceptable salts thereof.

4,065,452

21,21-DIHALO STEROIDS

Tsung-tee Li, Palo Alto; Michael Marx, Sunnyvale, and Lewis J. Throop, Los Altos, all of Calif., assignors to Syntex (U.S.A.) Inc., Palo Alto, Calif.

Filed Aug. 2, 1976, Ser. No. 711,042

Int. Cl.² C07J *71/00;* **A61K** *31/58*

U.S. Cl. 260—239.55 D **29 Claims**

1. A compound chosen from those represented by the formula

(I)

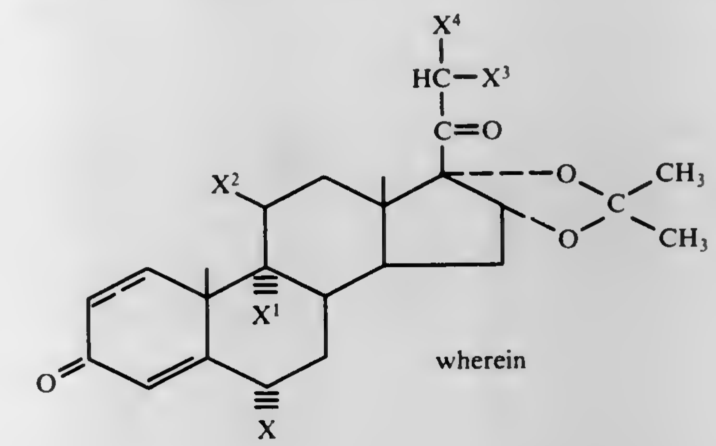

wherein

X is hydrogen, fluoro, or chloro;

X^1 is hydrogen, fluoro, chloro or bromo;

X^2 is hydroxy or may be chloro when X^1 is chloro;

X^3 and X^4 are independently fluoro, chloro or bromo; and the broken line between C-1 and C-2 indicates that the bond between C-1 and C-2 is a single or a double bond.

4,065,453

LEVOROTATORY MOLINDONE AND THE USE AS AN ANTIDEPRESSANT

Michael Finizio, Howard Beach, N.Y., assignor to Endo Laboratories, Inc., Garden City, N.Y.

Filed Nov. 1, 1976, Ser. No. 737,658

Int. Cl.² A61K *27/00;* **C07D** *295/00*

U.S. Cl. 424—248.56 **3 Claims**

1. The levorotatory enantiomer of 3-ethyl-6,7-dihydro-2-methyl-5(morpholinomethyl)indol-4 (5H)-one or a pharmaceutically acceptable acid addition salt thereof in the absence of any substantial amount of the dextrorotatory enantiomer.

3. A method of producing an antidepressant effect in warm-blooded animals comprising administering to said warm-blooded animals an effective antidepressant amount of the levorotatory enantiomer of claim **1** or a pharmaceutically acceptable acid addition salt thereof.

4,065,454

1,3-DIDESOXY-1,3-[N,N'-(1',2',3',4'-TETRAHYDRO-1',4'-DIOXO)-PHTHALAZINO]-INOSITOL COMPOUNDS

Horst Koenig, Ludwigshafen; Horst Prinzbach, and Reinhard Schwesinger, both of Freiburg, all of Germany, assignors to BASF Aktiengesellschaft, Ludwigshafen, Germany

Filed July 26, 1976, Ser. No. 708,604

Claims priority, application Germany, Aug. 11, 1975, 2535754

Int. Cl.² C07D *237/30*

U.S. Cl. 260—250 P **4 Claims**

1. A compound of the formula I

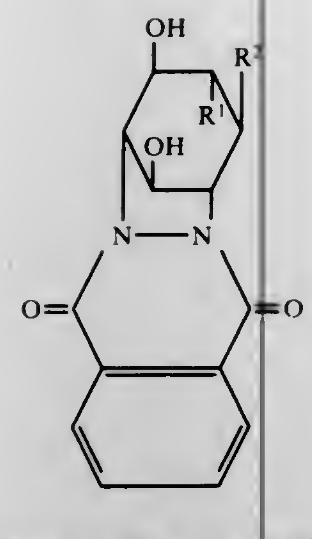

where R^1 and R^2 are each OH or R^1 and R^2, together with the carbon atoms by which they are linked, form an epoxide ring.

4,065,455
5-HALOGEN-SUBSTITUTED 7 ALKYL AND 7-ALKENYL 8-HYDROXYQUINOLINES
Phillip L. Mattison, New Brighton, Minn., assignor to General Mills Chemicals, Inc., Minneapolis, Minn.
Filed Mar. 4, 1974, Ser. No. 447,629
Int. Cl.² C07D *215/24*
U.S. Cl. 260—289 XA **14 Claims**

1. A compound of the formula:

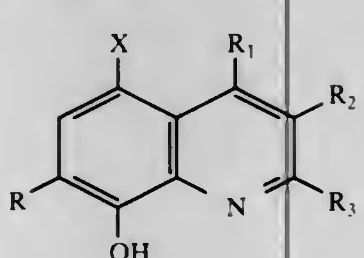

wherein X is Cl or Br, R is a branched chain alkenyl radical of about 8 to 20 carbon atoms obtained by reaction of a starting 8-hydroxyquinoline compound with a 1-chloro-1-alkene and R_1, R_2 and R_3 are hydrogen or alkyl groups of 1 to 4 carbon atoms with the proviso that at least two of R_1, R_2 and R_3 are hydrogen.

4,065,456
GLYCEROL DERIVATIVES OF QUINOLINE CARBOSTYRYL AND ISOCARBO STYRYL
Kazuyuki Nakagawa; Nanami Murakami; Hideo Mori, and Kaoru Tanimura, all of Tokushima, Japan, assignors to Otsuka Pharmaceutical Co., Ltd., Tokyo, Japan
Filed Oct. 24, 1974, Ser. No. 517,730
Claims priority, application Japan, Oct. 24, 1973, 48-120237; Oct. 26, 1973, 48-120994; Aug. 7, 1974, 49-90985; Aug. 7, 1974, 49-90986
Int. Cl.² C07D *215/22, 217/24*
U.S. Cl. 260—289 R **28 Claims**

1. A glycerol derivative represented by the formula

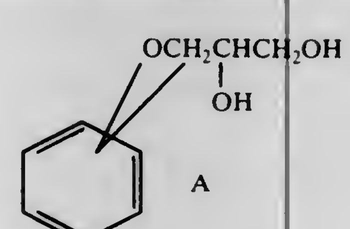

wherein A represents the atoms necessary to complete a bicyclic ring selected from the group consisting of

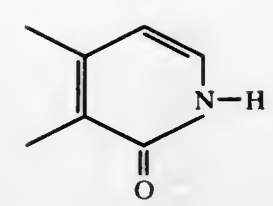

wherein R represents a hydrogen atom, an alkyl group having 1 to 4 carbon atoms, an alkenyl group having 2 to 4 carbon atoms or a phenylalkyl group having 1 or 2 carbon atoms in the alkyl moiety thereof; and the optically active isomers thereof.

4,065,457
4-HYDROXY-3-NITRO-CARBOSTYRIL COMPOUNDS
Derek Richard Buckle, Redhill; Barrie Christian Charles Cantello, Horsham, and Harry Smith, Maplehurst near Horsham, all of England, assignors to Beecham Group Limited, Great Britain
Continuation of Ser. No. 469,623, May 13, 1974, abandoned. This application Aug. 18, 1976, Ser. No. 715,501
Claims priority, application United Kingdom, May 19, 1973, 24000/73; May 22, 1973, 24317/73
Int. Cl.² C00D *215/22*
U.S. Cl. 260—289 K **6 Claims**

1. A compound of the formula (IA) or a pharmaceutically acceptable salt thereof:

(IA)

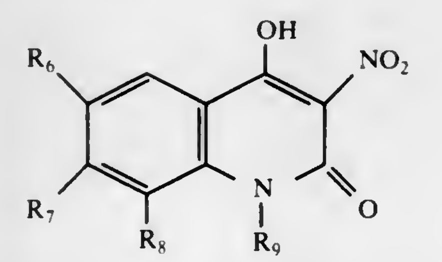

wherein one of the groups R_6, R_7 and R_8 are hydrogen and the other two are methyl, ethyl, n-propyl, methoxy, ethoxy or n-propoxy, and R_9 is hydrogen or lower alkyl.

4,065,458
EBURNAMENINE DERIVATIVES
Csaba Lorincz; Kalman Szasz; Maria Bolyos; Karola Jovanovics; Laszlo Szporny; Egon Karpati, and Eva Palosi, all of Budapest, Hungary, assignors to Richter Gedeon Vegyeszeti Gyar Rt., Budapest, Hungary
Filed June 9, 1976, Ser. No. 694,204
Claims priority, application Hungary, June 10, 1975, RI 566
Int. Cl.² C07D *471/22*
U.S. Cl. 260—293.55 **12 Claims**

1. A compound of the formula

(I)

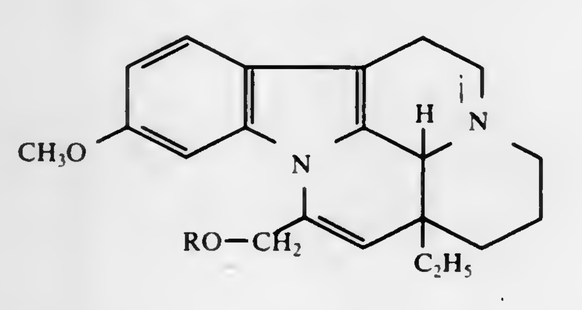

wherein

R is hydrogen or a C_{1-15} alkylcarbonyl, C_{2-6} alkenylcarbonyl, or a phenyl-(C_{1-5})-alkylcarbonyl or a benzoyl group unsubstituted or substituted with halogen, trihalomethyl, C_{1-4} alkoxy or nitro or a pharmaceutically acceptable acid addition and quaternary salt.

4,065,459
PROCESS FOR THE PREPARATION OF THIENO(3,2-C) PYRIDINE AND DERIVATIVES THEREOF
Alan Heymes, Portet sur Garonne, and Jean-Pierre Maffrand, Toulouse, both of France, assignors to Parcor, Paris, France
Filed Feb. 6, 1976, Ser. No. 655,966
Claims priority, application France, May 30, 1975, 75.17009
Int. Cl.² C07D *283/00*
U.S. Cl. 260—294.8 C **6 Claims**

1. Process for the preparation of compounds having the formula:

(I)

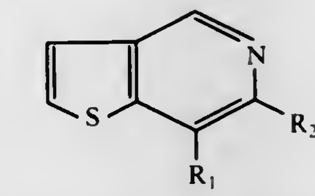

in which R_1 is selected from the group consisting of hydrogen and the alkyl groups having 1-6 carbon atoms and R_2 is selected from the group consisting of hydrogen and the lower alkyl groups having 1-6 carbon atoms, comprising reacting at room temperature in methylene chloride or chloroform as a solvent and in the presence of a hydrohalic acid binding agent, a compound of the formula (II):

(II)

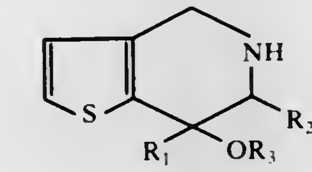

in which the radicals R_1 and R_2 having the above-defined meanings and R_3 is selected from the group consisting of hydrogen, an alkyl group, a substituted alkyl group, a benzyl radical and a substituted benzyl radical, with a halosulfonated derivative of the formula:

Hal — SO_2 — R (III)

in which Hal represents halogen and R is selected from the group consisting of the alkyl groups, the substituted alkyl groups, the aryl groups, the substituted aryl groups, the aralkyl groups and the substituted aralkyl groups, to give a N-substituted derivative having the formula:

(IV)

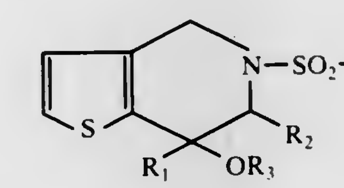

in which the various symbols having the above-defined meanings and heating the sulfonated derivative of the formula (IV) in an organic solvent selected from dioxane and the lower alkanols at refluxing temperature in the presence of an acid, to give the compound of the formula (I).

4,065,460
4,5,6,7-TETRAHYDRO-THIENO[3,2-c]-PYRIDINE DERIVATIVES AND PROCESS FOR THEIR PREPARATION
Alain Heymés, Portet-sur-Garonne, and Jean-Pierre Maffrand, Toulouse, both of France, assignors to Parcor, Paris, France
Filed Apr. 6, 1976, Ser. No. 674,734
Claims priority, application France, May 28, 1975, 75.16635
Int. Cl.² C07D *513/04*
U.S. Cl. 260—294.8 C **6 Claims**

1. A compound selected from the group consisting of 4,5,6,7-tetrahydro-thieno[3,2-c]-pyridine derivatives having the formula:

(I)

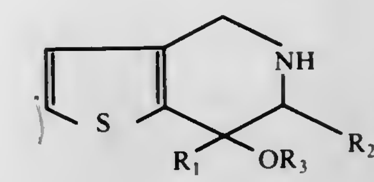

in which R_1 is selected from the group consisting of hydrogen and the alkyl radicals having 1-6 carbon atoms; R_2 is selected from the group consisting of hydrogen, an alkyl group having 1-6 carbon atoms, the phenyl radical, and the benzyl radical; R_3 is selected from the group consisting of an alkyl group having 1-6 carbon atoms, and the benzyl radical; and the pharmaceutically acceptable acid addition salts of said derivatives.

4,065,461
AMINO CONTAINING PYRIDYLOXY PROPANOLS
Karl Jakob Ross-Petersen, Farum, Denmark, assignor to Aktieselskabet Grindstedvaerket, Arhus N, Denmark
Filed Aug. 10, 1976, Ser. No. 713,166
Claims priority, application United Kingdom, Aug. 12, 1975, 33474/75
Int. Cl.² C07D *213/65, 213/73*
U.S. Cl. 260—296 AE **3 Claims**

1. A compound selected from the group consisting of

(I)

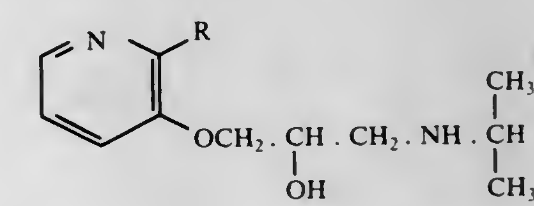

wherein R denotes a hydrogen atom or an amino group, and acid addition salts thereof.

4,065,462
IMINOISOINDOLINONE METAL COMPLEX
Christoph Frey, Aesch, and Jost von der Crone, Riehen, both of Switzerland, assignors to Ciba-Geigy Corporation, Ardsley, N.Y.
Filed Oct. 6, 1975, Ser. No. 619,889
Claims priority, application Switzerland, Oct. 17, 1974, 13919/74
Int. Cl.² C07D *209/44*
U.S. Cl. 260—299 **8 Claims**

1. An iminoisoindolinone metal complex of the formula

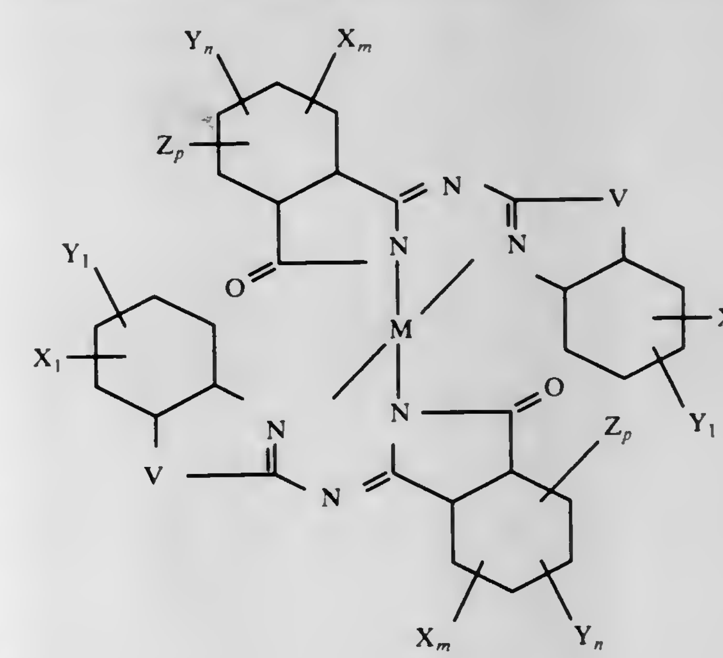

wherein M represents zinc, cadmium, cobalt, copper and nickel; X represents hydrogen; Y represents halogen; Z represents nitro, alkoxycarbonyl containing 2 to 6 carbon atoms, or a group of the formula RY_2—, wherein R represents hydrogen, alkyl of 1 to 6 carbon atoms, or cycloalkyl of 5 to 6 carbon atoms; Y_2 represents oxygen or sulphur; m and n are 0 to 4, p is 0 to 2, and the sum of $m+n+p$ is equal to 4; X_1 and Y_1 represent hydrogen, halogen, alkyl, alkoxy, alkoxycarbonyl alkylsulphonyl, alkylcarbamoyl groups of 1 to 6 carbon atoms, nitro, carbamoyl, or the radicals X_1 and Y_1 form a fused benzene ring.

4,065,463
HERBICIDAL 2-METHYL-4-PHENYL-5-ISOXAZOLINONES
James Richard Beck, and Robert Peter Gajewski, both of Indianapolis, Ind., assignors to Eli Lilly and Company, Indianapolis, Ind.
Continuation-in-part of Ser. No. 639,749, Dec. 11, 1975, Pat. No. 4,000,155. This application Sept. 27, 1976, Ser. No. 726,726
Int. Cl.² C07D *261/12*
U.S. Cl. 260—307 A **1 Claim**

1. The compound 2-methyl-4-(α,α,α-trifluoro-m-tolyl)-3-isoxazolin-5-one.

4,065,464
PROCESS FOR THE PREPARATION OF SUBSTITUTED TRICHLOROACETAMIDINE DERIVATIVES
George H. Denny, and Walfred S. Saari, both of Lansdale, Pa., assignors to Merck & Co., Inc., Rahway, N.J.
Filed June 1, 1976, Ser. No. 691,279
Int. Cl.² C07D *209/14*
U.S. Cl. 260—326.15 **5 Claims**

1. A process for the preparation of a compound having the formula:

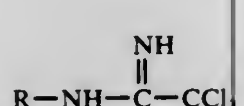

wherein R is 3-indolylmethyl, which comprises treating with trichloroacetamidine a compound having the formula:

R-G

wherein R is as previously defined and G is a leaving group selected from a halide, an amine substituted with two groups selected from loweralkyl or aromatic hydrocarbon and loweralkyl quaternary derivatives thereof; pyridyl, loweralkylsulfonate and an aromatic sulfonate at reflux temperature for from 5 minutes to 6 hours.

4,065,465
PROCESS FOR THE PREPARATION OF SUBSTITUTED TRICHLOROACETAMIDINE DERIVATIVES
George H. Denny, Lansdale, Pa., assignor to Merck & Co., Inc., Rahway, N.J.
Filed June 1, 1976, Ser. No. 691,280
Int. Cl.² C07D *209/14*
U.S. Cl. 260—326.15 **3 Claims**

1. A process for the preparation of a compound having the formula:

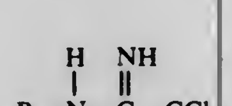

wherein R is 3-indolylmethyl;
which comprises treating a compound having the formula:

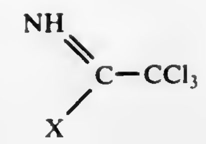

wherein
X is amino or loweralkoxy; with a compound having the formula:

R—NH_2

wherein
R is as previously defined, at from room temperature to 100° C for from 30 minutes to 40 hours.

4,065,466
INTEGRATED PROCESS FOR THE PREPARATION OF 2-DIALKOXYPHOSPHINYLIMINO-1,3-DITHIETANE
David William Reger, Trenton; Murray Garber, and Don Wesley Long, both of Lawrenceville, all of N.J., assignors to American Cyanamid Company, Stamford, Conn.
Filed June 14, 1976, Ser. No. 695,667
Int. Cl.² C07D *339/00*
U.S. Cl. 260—327 M **11 Claims**

1. A process for preparing a compound of the formula:

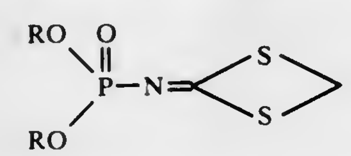

wherein R is alkyl C_1-C_4 comprising the steps of: (a) reacting a compound of formula:

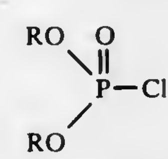

wherein R is as defined above with an anhydrous thiocyanate selected from sodium, potassium and ammonium thiocyanate at a temperature range of 5° C to 30° C to obtain a compound of formula:

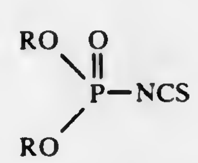

wherein R is as defined above (b) reacting the latter thusformed compound with a hydrosulfide selected from the group consisting of sodium hydrosulfide, potassium hydrosulfide and ammonium hydrosulfide in an aqueous environment containing a non-ionic surfactant at a temperature range of 5° C to 30° C to obtain a compound of the formula:

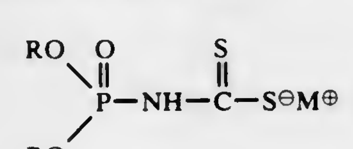

wherein R is as defined above and M is sodium, potassium or ammonium; (c) reacting the thus-formed compound with a methylene halide selected from methylene bromide and methylene iodide in an aqueous environment at a temperature range of 25° C to 45° C and a pH range of 5 to 8, and (d) recovering desired product.

4,065,467
5:6-BENZO γ-PYRONE DERIVATIVES AND PROCESS FOR THEIR PREPARATION
Gianfederico Doria; PierNicola Giraldi; Francesco Lauria; Maria Luisa Corno, all of Milan; Piero Sberze, Varese, and Marcello Tibolla, Milan, all of Italy, assignors to Carlo Erba, S. p. A., Milan, Italy
Continuation of Ser. No. 536,476, Dec. 26, 1974, abandoned. This application Feb. 23, 1976, Ser. No. 660,383
Claims priority, application Italy, Dec. 27, 1973, 32089/73; July 4, 1974, 24777/74; July 17, 1974, 25244/74
Int. Cl.² C07D *311/02, 249/02;* **A61K** *31/35, 31/41*
U.S. Cl. 260—345.2 **28 Claims**

1. Compound selected from the group consisting compound of the formula:

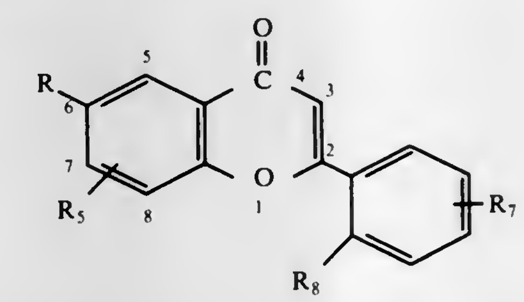

wherein R is carboxy or —$COOR_{13}$, wherein R_{13} is C_1-C_{12} alkyl; R_5 is hydrogen, allyl or propyl;
R_8 is (a) a radical

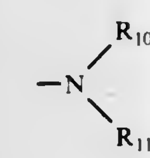

wherein each of R_{10} and R_{11} are hydrogen or C_1-C_6 alkyl, (b) a radical —$(O)_m$—R_{14}, wherein m is 0 or 1 and R_{14} is C_1-C_6 alkyl which may be unsubstituted or substituted with hydroxy or C_1-C_6 alkoxy; and R_7 is hydrogen; and a pharmaceutically acceptable salt thereof.

4,065,468
MANUFACTURE OF MALEIC ANHYDRIDE FROM BUTANE
Robert K. Grasselli, Cleveland; Dev D. Suresh, Macedonia, and Robert C. Miller, Northfield, all of Ohio, assignors to Standard Oil Company, Cleveland, Ohio
Continuation of Ser. No. 67,269, Aug. 26, 1970, abandoned. This application May 12, 1976, Ser. No. 685,879
Int. Cl.² C07D *307/60*
U.S. Cl. 260—346.75 **11 Claims**

1. A process for the production of maleic anhydride by the oxidation of n-butane with molecular oxygen or a molecular oxygen-containing gas at a reaction temperature of 300° C to 600° C, in the presence of a catalyst described by the formula

$A_aB_bSb_cMo_dO_e$

wherein
A is at least one member selected from the group consisting of Fe and V;
B is at least one member selected from the group consisting of Al, Cr, Co, Ni, Cu, Bi, Te, B, P, Ti and W;
a is a number from 0.1 to 6;
b is a number from 0 to 3;
c is a number from 0.1 to 12;
d is a number from 12 to 1;
e is a number determined by the valence requirements of the combined elements other than oxygen present in the catalyst.

4,065,469
PROCESS FOR THE SYNTHESIS OF DIBENZOFURAN
Pietro Antonio Moggi, Milan, and Giuseppe Iori, San Donato Milanese (Milan), both of Italy, assignors to ANIC, S.p.A., Palermo, Italy
Filed Nov. 25, 1975, Ser. No. 635,235
Claims priority, application Italy, Nov. 25, 1974, 29771/74
Int. Cl.² C07D *307/91*
U.S. Cl. 260—346.71 **10 Claims**

1. The process of synthesizing dibenzofuran which comprises subjecting 2-cyclohexenylcyclohexanone to oxidative dehydrocyclization at high temperatures in the presence of a dehydrocyclization catalyst which is a member of the group consisting of the oxides and blends of oxides of the metals belonging to groups III, IV, V, VI, and VIII, and an oxidizing agent.

4,065,470
PROCESS FOR PRODUCING MALEIC ANHYDRIDE FROM MIXTURE OF FIVE AND SIX CARBON HYDROCARBONS
John D. Bacha, Monroeville; Joseph S. Matthews, Pittsburgh, and Charles M. Selwitz, Monroeville, all of Pa., assignors to Gulf Research & Development Company, Pittsburgh, Pa.
Filed Aug. 13, 1976, Ser. No. 714,047
Int. Cl.² C07D *307/60*
U.S. Cl. 260—346.75 **9 Claims**

1. A process for preparing maleic anhydride from a hydrocarbon mixture containing C_5 monoolefinic hydrocarbons, C_5 cyclic and acyclic diolefinic hydrocarbons, C_5 paraffins, C_6 paraffins and benzene which comprises separating C_5 cyclic diolefinic hydrocarbons from said hydrocarbon mixture and then reacting the resulting mixture with molecular oxygen in the presence of an oxidation catalyst.

4,065,471
N-(4-AMINO-2-BUTYNYL)IMIDES
William B. Dickinson, Colonie, N.Y., assignor to Sterling Drug Inc., New York, N.Y.
Continuation-in-part of Ser. No. 5,368, Jan. 23, 1970, abandoned, and a continuation-in-part of Ser. No. 881,302, Dec. 1, 1969, abandoned, which is a continuation-in-part of Ser. No. 650,587, July 3, 1967, abandoned, and a continuation-in-part of Ser. No. 650,633, July 3, 1967, abandoned, each is a division of Ser. No. 447,105, April 9, 1965, Pat. No. 3,354,178. This application Sept. 14, 1970, Ser. No. 72,169
Int. Cl.² C07D *207/12, 207/06, 211/88*
U.S. Cl. 260—326 N **8 Claims**

1. A compound of the formula

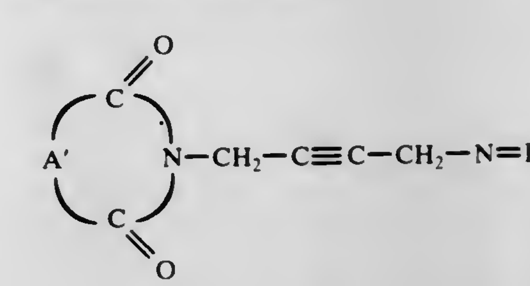

wherein A′ is a member of the group consisting of divalent alkylene of from two to four carbon atoms and unsubstituted orthophenylene, and N=B is a basic tertiary amino radical selected from the group consisting of di(lower-alkyl)amino, N-lower-alkyl-N-lower-alkenylamino, di(lower-alkenyl-)amino, N-lower-alkyl-N-cycloalkylamino, di(cycloalkyl-)amino, N-(phenyl-lower-alkyl)-N-lower-alkylamino, pyrrolidino, piperidino, morpholino, and thiamorpholino.

4,065,472
5-(2-CARBOXYTHIOPHEN-5-YL)-16-ARYLOXY-α-TETRANOR-ω-TETRANORPROSTAGLANDINS
Thomas K. Schaaf, Old Lyme, and Jasjit Singh Bindra, Groton, both of Groton, Conn., assignor to Pfizer Inc., New York, N.Y.
Filed Sept. 29, 1975, Ser. No. 617,481
Int. Cl.^{2} C07D *333/24;* A01N *9/00*
U.S. Cl. 260—332.2 C 7 Claims
1. An optically active compound of the structure

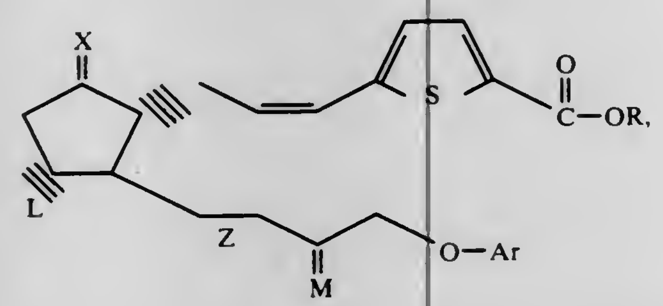

the optical antipode and the racemic mixture thereof wherein M and X are selected from the group consisting of

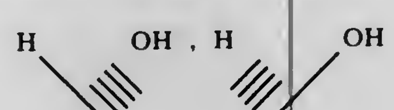

and keto;
Z is a trans double bond or single bond;
R is selected from the group consisting of hydrogen, alkyl of from one to ten carbon atoms, cycloalkyl of from three to eight carbon atoms, phenyl, phenylalkyl of from seven to nine carbon atoms and substituted phenyl wherein said substituent if fluoro, chloro, bromo, iodo, alkyl and alkoxy of from one to six carbon atoms, and phenyl;
L is selected from the group consisting of hydrogen and hydroxyl; and
Ar is selected from the group consisting of phenyl, α-naphthyl, β-naphthyl and monosubstituted phenyl wherein said substituent is selected from the group consisting of fluoro, chloro, bromo, trifluoromethyl, phenyl, and alkyl and alkoxy of from one to six carbon atoms.

4,065,473
INTERMEDIATES IN THE PREPARATION OF 2,3,4,5-TETRAHYDRO-1H-3-BENZAZEPINES
Arnold Brossi, Verona; Benjamin Pecherer, Montclair, and Robert Sunbury, Wayne, all of N.J., assignors to Hoffmann-La Roche Inc., Nutley, N.J.
Division of Ser. No. 402,536, Oct. 1, 1973, Pat. No. 3,906,006, which is a division of Ser. No. 65,340, Aug. 19, 1970, Pat. No. 3,795,683. This application June 20, 1975, Ser. No. 588,985
Int. Cl.^{2} C07D *317/44*
U.S. Cl. 260—340.5 R 2 Claims
1. A compound selected from the group consisting of compounds of the formula

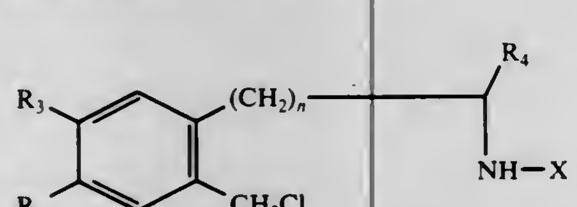

wherein R_2 and R_3 taken together signify methylenedioxy; R_4 signifies hydrogen, lower alkyl, carboxy, aryl or aryl substituted by a member selected from the group consisting of halogen, lower alkyl, nitro, or trifluoromethyl; n is 1 or 2; and X is acetyl.

4,065,474
1,4-BENZODIAZEPINE-2-AMINE DERIVATIVES
Umakant Devdas Shenoy, London, England, assignor to DDSA Pharmaceuticals Limited, Leicester, England
Filed May 24, 1976, Ser. No. 689,303
Claims priority, application United Kingdom, May 22, 1975, 22057/75
Int. Cl.^{2} C07D *405/12*
U.S. Cl. 260—347.7 6 Claims
1. A benzodiazepine derivative of the formula I

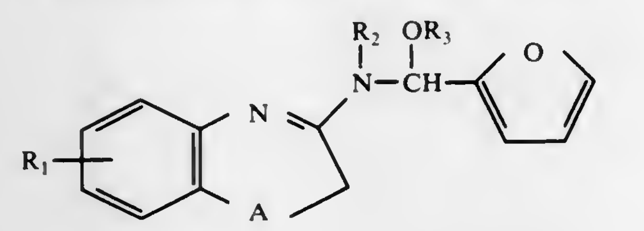

in which
R_1 represents a hydrogen or halogen atom or trifluoromethyl, cyano, nitro, lower alkyl, lower alkoxy or lower alkyl thio;
R_2 represents lower alkyl, hydroxy-(lower alkyl), lower alkenyl or benzyl;
R_3 represents lower alkyl; and
—A— represents a grouping of the formula:

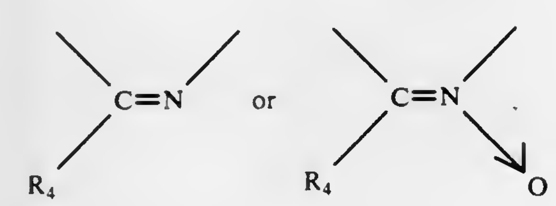

in which R_4 represents phenyl, (lower alkyl)-phenyl, nitrophenyl, halophenyl or pyridyl.

4,065,475
PROCESS FOR PREPARING CIS-EPOXYSUCCINIC ACID SALTS OF HIGH PURITY
Kazuo Hosoi; Norio Kawabe, and Masaji Ohno, all of Kamakura, Japan, assignors to Toray Industries, Inc., Tokyo, Japan
Continuation-in-part of Ser. No. 605,552, Aug. 7, 1975, abandoned. This application May 21, 1976, Ser. No. 688,920
Int. Cl.^{2} C07D *301/12*
U.S. Cl. 260—348.31 8 Claims
1. A continuous process for preparing a highly pure cis-epoxysuccinic acid salt, comprising the steps of:
a. conducting an epoxidation reaction by contacting and reacting a maleic acid salt with hydrogen peroxide in the presence of a tungstate or molybdate catalyst to form an aqueous epoxidation reaction solution;
b. contacting said aqueous epoxidation reaction solution with a Type II strongly basic anion exchange resin in the neutralized form at a pH lower than about 7 to selectively adsorb said catalyst;
c. contacting said resin with an alkali metal hydroxide to recover said catalyst in the form of an aqueous solution,
d. treating said recovered catalyst solution with a calcium ion source at a pH of about 7.0–8.5, and
e. adding maleic acid or maleic anhydride and hydrogen peroxide into said recovered catalyst solution to form another epoxidation reaction solution whereby the catalyst is recycled and the resin is regenerated to provide a continuous process.

4,065,476
BORIDE CATALYST FOR EPOXIDIZING OLEFINIC COMPOUNDS
Robert Malone Gipson, Austin, Tex., assignor to Texaco Development Corporation, New York, N.Y.
Division of Ser. No. 565,004, April 4, 1975. This application July 9, 1976, Ser. No. 703,866
Int. Cl.^{2} C07D *301/20*
U.S. Cl. 260—348.29 5 Claims
1. A method for the liquid phase epoxidation of an olefin having from about 2 to about 60 carbon atoms with an organic hydroperoxide comprising the step of:
intimately contacting said olefin with said organic hydroperoxide at lower temperatures of about 25° C to about 200° C and pressures sufficient to maintain the product and reactants substantially in liquid phase in the presence of a catalytically effective amount of a binary boride of boron and at least one non-boron element selected from the group consisting of carbon and silicon.

4,065,477
PROCESS FOR PREPARING HIGHLY PURE 1-NITROANTHRAQUINONE
Thurairajah Padmanathan, Piscataway, N.J., assignor to Bisonwerke Bahre & Greten GmbH & Co. KG, Stamford, Conn.
Filed Oct. 29, 1976, Ser. No. 736,663
Int. Cl.^{2} C07C *49/68;* C09B *1/04*
U.S. Cl. 260—369 3 Claims
1. A process for preparing 1-nitroanthraquinone comprising the steps of:
1. **oxidizing** 3-nitro-o-xylene to form 2-methyl-3-nitrobenzoic acid,
2. converting said 2-methyl-3-nitrobenzoic acid to a 2-methyl-3-nitrobenzoyl halide,
3. reacting said 2-methyl-3-nitrobenzoyl halide with benzene in the presence of a suitable Friedel Crafts catalyst to form 2-methyl-3nitrobenzophenone,
4. oxidizing said 2-methyl-3-nitrobenzophenone to form 2-benzoyl-6-nitrobenzoic acid, and
5. cyclizing said 2-benzoyl-6-nitrobenzoic acid in a sutiable inorganic acid to form 1-nitroanthraquinone and recovering the same therefrom.

4,065,478
PROCESS FOR THE MANUFACTURE OF α,α'-AMINONITROANTHRAQUINONES
Zdenek Seha, Basel, Switzerland, assignor to Ciba-Geigy AG, Basel, Switzerland
Filed Dec. 15, 1975, Ser. No. 640,372
Claims priority, application Switzerland, Dec. 19, 1974, 16978/74
Int. Cl.^{2} C07C *97/24*
U.S. Cl. 260—382 10 Claims
1. A process for the manufacture of α,α'-aminonitroanthraquinone from an α,α'-dinitroanthraquinone with a selectivity of at least about 70% comprising the step of reacting an α,α'-dinitroanthraquinone with ammonia in a dipolar aprotic solvent which is inert to ammonia, the reaction substrate and the reaction product said ammonia being present in excess of, at most, about 50% over the stoichiometric amount.

4,065,479
METHOD OF SYNTHESIS OF PI-ALLYL-PALLADIUM COMPOUNDS
Richard Craig Larock, Ames, Iowa, assignor to Iowa State University Research Foundation, Inc., Ames, Iowa
Filed Apr. 30, 1976, Ser. No. 681,784
Int. Cl.^{2} C07F *15/00*
U.S. Cl. 260—429 L 18 Claims
1. A method of preparing pi-allyl-palladium compounds, said method comprising:
reacting a vinylmercuric salt the anion of said salt being selected from the group consisting of nitrate, acetate, sulfate, phosphate, and halide, with an olefin of the formula:

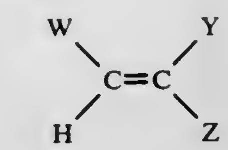

wherein W, Y and Z are selected from the group consisting of aliphatic, alicyclic and aromatic organic radicals, and a palladium (II) salt to provide carbon-carbon bond formation between carbon atoms of said vinylmercuric salt and said olefin.

4,065,480
PROCESS FOR PREPARING SUBSTITUTED CYCLOPROPYCARBINYL COMPOUNDS
Donald John Peterson, Cincinnati, and Medford Dwight Robbins, Fairfield, both of Ohio, assignors to The Procter & Gamble Company, Cincinnati, Ohio
Division of Ser. No. 586,456, June 12, 1975, Pat. No. 3,998,889, which is a division of Ser. No. 390,156, Aug. 23, 1973, Pat. No. 3,959,324, which is a continuation-in-part of Ser. No. 247,641, April 26, 1972, abandoned. This application June 24, 1976, Ser. No. 699,414
Int. Cl.^{2} C07F *3/06*
U.S. Cl. 260—429.9 7 Claims
1. A process for preparing substituted cyclopropylcarbinyl compounds of the formula

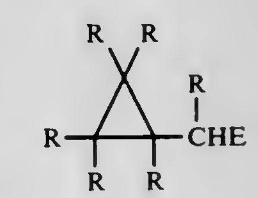

wherein each R is a member selected from the group consisting of hydrogen, alkyl, aryl, alkenyl, substituted alkyl, substituted aryl and substituted alkenyl substituents, and E is a substituent derived from an electrophile source selected from the group of inorganic compounds consisting of Cl_2, Br_2, I_2, $HgCl_2$, $ZnCl_2$, $AlCl_3$, NOCl, SO_3, and HCl, comprising admixing an organotin compound of the formula

$$(CR_2=CRCR_2CR_2)_x\,SnR^1_{4-x}$$

wherein x is an integer of from 1–4 and R^1 is an alkyl substituent, with said electrophile source.

4,065,481
1:1-AZOMETHINE-METAL-COMPLEX DYESTUFFS
François L'Eplattenier, Therwil, and Laurent Vuitel, Monthey, both of Switzerland, assignors to Ciba-Geigy Corporation, Ardsley, N.Y.
Filed Dec. 12, 1975, Ser. No. 640,373
Claims priority, application Switzerland, Dec. 17, 1974, 16810/74
Int. Cl.^{2} C07F *1/08*
U.S. Cl. 260—438.1 6 Claims
1. 1:1-Metal complexes of azomethines of the formula I

(I)

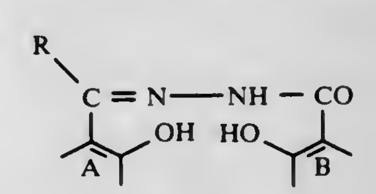

wherein A and B are isocyclic aromatic groups, with however only one of the groups A and B being a benzene ring, R represents a hydrogen atom, an alkyl group containing 1 to 6 carbon

atoms, or an aryl group, and the complexing metal ions are bivalent cations of zinc, copper, nickel, colialtor cadmium.

4,065,482

SILOXANEDIOLATE COMPLEXES AND PREPARATION THEREOF

Terry G. Selin, Schenectady, N.Y., assignor to General Electric Company, Waterford, N.Y.

Division of Ser. No. 581,146, May 27, 1975, Pat. No. 4,003,917, which is a division of Ser. No. 602,490, Dec. 19, 1966, Pat. No. 3,923,834. This application Feb. 23, 1976, Ser. No. 677,114

Int. Cl.[2] C07F *7/08*

U.S. Cl. 260—448.2 E **1 Claim**

1. The process for the preparation of an aryl polysiloxanediol having the general formula

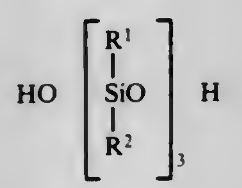

wherein R^1 and R^2 are aryl radicals which comprise: acidifying a siloxanediolate complex having the formula,

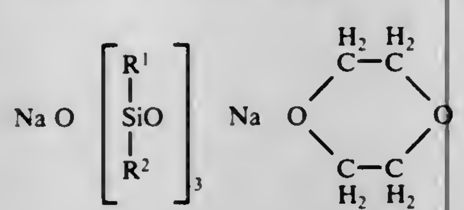

with an acid having a hydrogen ion concentration of less than about 2 molar.

4,065,483

METHANOL

Alwyn Pinto, Stockton-on-Tees, England, assignor to Imperial Chemical Industries Limited, London, England

Filed June 24, 1975, Ser. No. 590,012

Claims priority, application United Kingdom, July 2, 1974, 29260/74

Int. Cl.[2] C07C *29/16, 31/06*

U.S. Cl. 260—449.5 **12 Claims**

1. A methanol production process which comprises:

a. generating methanol synthesis gas by reacting a carbonaceous feedstock with steam in one or more stages at the outlet of which there is delivered a gas stream at over 400° C;

b. generating steam at a pressure of at least 50 ata by passing water in heat exchange with the gas stream of stage (a);

c. bringing synthesis gas to synthesis pressure in the range 30 to 400 ata by means of a compressor driven by an engine in which such steam is let down;

d. synthesizing methanol from synthesis gas by passing synthesis gas from stage (c) over a catalyst containing copper and zinc oxide at an outlet temperature of under 300° C;

e. transferring heat evolved in the methanol synthesis of stage (d) from methanol-containing synthesis gas effluent to water to heat said water to a temperature in the range 200° C to 260° C, said water maintained under a pressure too high to permit boiling to take place, by passing said methanol-containing synthesis gas through two parallel heat exchangers, the first of which heats synthesis gas to methanol synthesis inlet temperature and the second of which heats said water;

f. passing the hot water from stage (e) to stage (b) as a water source in the heat exchange for steam generation; and

g. recovering methanol from the cooled methanol-containing synthesis gas from stage (e).

4,065,484

METHANATION PROCESS WITH INTERMITTENT REACTIVATION OF CATALYST

Harry H. Dobashi, Fullerton, Calif., assignor to Union Oil Company of California, Los Angeles, Calif.

Continuation-in-part of Ser. No. 630,977, Nov. 12, 1975, abandoned. This application Dec. 6, 1976, Ser. No. 748,134

Int. Cl.[2] C07C *1/04, 1/16*

U.S. Cl. 260—449.6 M **10 Claims**

1. A methanation process wherein:

1. a stream of contaminated feed gas comprising hydrogen and carbon monoxide and/or carbon dioxide is contacted with a nickel-alumina catalyst at temperatures between about 600° and 1500° F to produce methane;

2. said catalyst has a total nickel content between about 15 and 60% by weight, calculated as Ni, one portion of said nickel content being in an active metallic state, and another portion thereof being nickel aluminate, the nickel specific surface area of said catalyst in its freshly reduced state being between about 5 and 50 m^2/gm of Ni;

3. said feed gas is contaminated with H_2S or a sulfur compound which yields H_2S upon hydrogenation, whereby said catalyst becomes at least partially deactivated;

4. said deactivated catalyst is reactivated with essentially no removal of sulfur therefrom by contacting the same with a substantially sulfur-free stream of reactivating gas consisting essentially of hydrogen, said reactivation contacting being carried out at between about 800° and 1500° F and continued for at least about 5 hours; and

5. the resulting reactivated catalyst is again placed on-stream for methanation as defined in (1) above.

4,065,485

CYCLITOLAMINES

Frederic P. Hauck, Somerville, and Joyce Reid, Highland Park, both of N.J., assignors to E. R. Squibb & Sons, Inc., Princeton, N.J.

Filed Oct. 26, 1976, Ser. No. 735,855

Int. Cl.[2] C07C *121/47, 69/02;* **A61K** *31/13*

U.S. Cl. 260—464 **9 Claims**

1. A compound having the formula

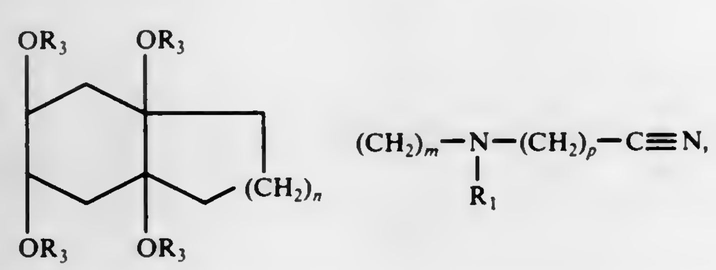

or a pharmaceutically acceptable acid-addition salt thereof, wherein R_1 is alkyl or arylalkyl; R_3 is alkanoyl of 1 to 7 carbon atoms; m is 1, 2, 3 or 4; n is 1, 2 or 3; and p is 0, 1, 2 or 3; wherein aryl is phenyl or phenyl substituted with one or two halogen, alkyl or alkoxy groups; and alkyl and alkoxy are groups having 1 to 6 carbon atoms.

4,065,486

PROCESS FOR RECOVERY OF PRODUCTS FROM A WASTE STREAM IN THE MANUFACTURE OF ACRYLONITRILE

John Anton Thorpe, Memphis, Tenn., and Harold Felton Porter, Hockessin, Del., assignors to E. I. Du Pont de Nemours and Company, Wilmington, Del.

Filed Sept. 13, 1976, Ser. No. 722,514

Int. Cl.[2] C07C *120/14, 120/00*

U.S. Cl. 260—465.3 **7 Claims**

1. A process for the recovery of reactants and products contained in dilute aqueous stream from the waste water column of a process for the production of acrylonitrile by ammoxidation of propylene while concentrating said stream which reactants and products comprise hydrogen cyanide, acrylonitrile, ammonia, ammonium sulfate, and high boiling nitrogen containing impurities said process comprising mixing said dilute stream with a stream from the same source as said dilute stream partially concentrated by having a portion of the water removed therefrom passing the mixture obtained through a heat exchanger at a velocity of at least 6 ft/sec while maintaining said mixture in the liquid state to thereby heat the mixture to at least 105° C and thereafter rapidly reducing the pressure of the heated mixture sufficiently to vaporize a portion of said mixture and thereafter returning said vapor to said acrylonitrile process while withdrawing a portion of the unvaporized stream.

4,065,487

PROCESS FOR PRODUCING BENZONITRILE

Ramiz Gasan Kuli ogly Rizaev, ulitsa Sharif-zade, 148, blok 5, kv. 67; Soltan Dzhafarovich Mekhtiev, ulitsa Khagani, 26/32, blok 5, kv. 92; Zemfira Jusif kyzy Magerramova, ulitsa E.-Saratovtsa, 3/5, kv. 14; Viktor Efimovich Sheinin, ulitsa Pervomaiskaya, 251, blok 2, kv. 28; Mirabdulla Mirakhmed ogly Mirataev, ulitsa Khanlara, 24, kv. 24, and Idris Aslan ogly Guseinov, Kirovsky raion, poselok Khodzhi Gasan, ulitsa A. Matrosova, 28, all of Baku, U.S.S.R.

Filed July 21, 1976, Ser. No. 707,426

Int. Cl.[2] C07C *120/14*

U.S. Cl. 260—465 C **3 Claims**

1. A process for producing benzonitrile comprising reacting toluene with ammonia at a temperature within the range of from 340° to 480° C in the presence of oxygen or a mixture thereof with inert gases and a catalyst, viz. a mixture of oxides of vanadium, chromium, antimony and bismuth taken in a molar ratio of 1-10:1-20:1-10:1-15 respectively deposited onto a carrier, followed by isolation of the desired product.

4,065,488

PROCESS FOR PREPARING 1,4:3,6-DIANHYDRO-D-GLUCITOL 2-NITRATE

Chih H. Chou, Dollard des Ormeaux, and Gordon S. Myers, Mount Royal, both of Canada, assignors to American Home Products Corporation, New York, N.Y.

Filed Feb. 24, 1977, Ser. No. 771,860

Int. Cl.[2] C07C *77/02*

U.S. Cl. 260—467 **6 Claims**

1. A process for preparing 1,4:3,6-dianhydro-D-glucitol 2-nitrate which comprises the steps of:

a. acetylating 1,4:3,6-dianhydro-D-glucitol with 0.5 to 1.5 molar equivalents of acetic anhydride in the presence of an acid catalyst to obtain a mixture of 1,4:3,6-dianhydro-D-glucitol 5-acetate, 1,4:3,6-dianhydro-D-glucitol 2-dianhydro-D-glucitol 2,5-diacetate;

b. nitrating the latter mixture with a mixture of nitric acid and acetic anhydride to obtain a mixture of 1,4:3,6-dianhydro-D-glucitol 5-acetate 2-nitrate, 1,4:3,6-dianhydro-D-glucitol 2-acetate 5-nitrate and 1,4:3,6-dianhydro-D-glucitol 2,5-diacetate; and

c. hydrolyzing the latter mixture in the presence an aqueous solution of an inorganic base to obtain a mixture of 1,4:3,6-dianhydro-D-glucitol 2-nitrate and 1,4:3,6-dianhydro-D-dlucitol 5-nitrate in a ratio greater than 2:1 and isolating 1,4:3,6-dianhydro-D-glucitol 2-nitrate.

4,065,489

BIPHENYL ESTERS AND LIQUID CRYSTALLINE MIXTURES COMPRISING THEM

Rolf Steinstrasser, and Fernando Del Pino, both of Darmstadt, Germany, assignors to Merck Patent Gesellschaft mit beschrankter Haftung, Darmstadt, Germany

Filed Oct. 21, 1975, Ser. No. 624,400

Claims priority, application Germany, Oct. 22, 1974, 2450088; Aug. 6, 1975, 2535046

Int. Cl.[2] C07C *69/76*

U.S. Cl. 560—59 **14 Claims**

1. A biphenyl ester of the formula

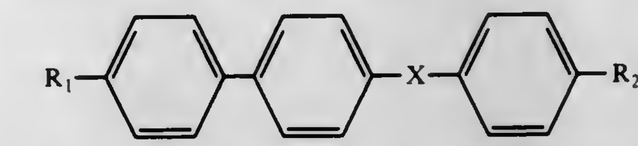

wherein X is —CO—O— or —O—CO— and R_1 and R_2 each are alkyl or alkoxy of 1–8 carbon atoms.

4,065,490

PROCESS FOR THE PREPARATION OF OXALATE ESTERS FROM CARBON MONOXIDE AND AN ENOL ETHER

Lee R. Zehner, Media, Pa., assignor to Atlantic Richfield Company, Los Angeles, Calif.

Filed Mar. 22, 1976, Ser. No. 669,376

The portion of the term of this patent subsequent to Jan. 17, 1995, has been disclaimed.

Int. Cl.[2] C07C *69/36*

U.S. Cl. 560—204 **23 Claims**

1. An process for the preparation of oxalate esters which comprises reacting under substantially anhydrous conditions an enol ether having the formula

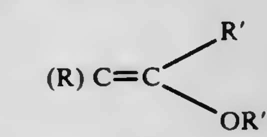

wherein R and R′ may be hydrogen, an alkyl, alicyclic, aralkyl or aryl group, and R″ is an alkyl or aralkyl group, which R and R′, except when hydrogen, and R″ may contain other substitutents which do not interfere with the reaction, with carbon monoxide, a monohydric alcohol, having the formula R″OH wherein R″ is defined above and oxygen, at a pressure of between about 500 psig and 3000 psig and at a temperature in the range of about 50° C. to 200° C. in the presence of an effective amount of a catalyst selected from the group consisting of palladium, platinum, rhodium, cadmium, cobalt, zinc and copper salt compounds or mixtures thereof, and a catalytic amount of

a. an aliphatic, cycloaliphatic, aromatic or heterocyclic amine or ammonia,

b. a copper (II) or iron (III) oxidant salt compound, and

c. an ammonium or substituted ammonium salt compound, and recovering the desired oxalate ester.

4,065,491

PROCESS FOR THE PREPARATION OF N-PHOSPHONOMETHYL-GLYCINE

Tódor Pfliegel; Jenö Seres; Antal Gajáry; Klára Daróczy nee Csuka, and Lajos T. Nagy, all of Budapest, Hungary, assignors to Chinoin Gyogyszer es Vegyeszeti Termekek Gyara Rt., Budapest, Hungary

Continuation of Ser. No. 588,231, June 19, 1975, abandoned. This application Jan. 12, 1977, Ser. No. 758,790

Claims priority, application Hungary, June 27, 1974, 2251

Int. Cl.[2] C07F *9/38*

U.S. Cl. 260—502.5 **2 Claims**

1. A process for the preparation of N-phosphonomethyl-glycine comprising the steps of:

a. reacting formaldehyde and glycine in an aqueous alkali-

metal hydroxide medium in substantially equimolar quantities at a temperature of −5° to +15° C;

b. adding to the reaction system of step (a) an amount of dimethyl or diethyl phosphite substantially equimolar to the glycine and formaldehyde;

c. heating the reaction system of step (b) to a temperature of 50° to 100° C to form N-phosphonomethyl-glycine dimethyl or diethylester; and

d. hydrolyzing the diester formed in step (c) by adding to the reaction system thereof at a temperature between 50° and 100° C a mineral acid selected from the group which consists of hydrochloric acid, sulfuric acid and phosphoric acid, thereby producing N-phosphonomethyl-glycine.

4,065,492

PROCESS FOR PREPARING AMINONAPHTHALENE DERIVATIVES IN A TITANIUM OR TITANIUM ALLOY REACTOR

Georg Spielberger, Leverkusen; Hermann Wunderlich, Odenthal-Hahnenberg; Günther Klag, Leverkusen, and Marko Zlokarnik, Cologne, all of Germany, assignors to Bayer Aktiengesellschaft, Leverkusen, Germany

Filed June 22, 1976, Ser. No. 698,563

Claims priority, application Germany, July 12, 1975, 2531281

Int. Cl.² C07C *85/06*

U.S. Cl. 260—508 **9 Claims**

1. In a process for preparing aminonaphthalene derivatives wherein the corresponding naphthol derivative is reacted with ammonia or amines in the presence of bisulfites, the improvement which comprises carrying out the reaction in a continuous procedure in reaction apparatus which consists wholly or partly of titanium or a titanium alloy, wherein the elementary carbon content in the system used is less than 0.1% by weight.

4,065,493

DEPENTYL ANALOGUES OF 11-DEOXY-PROSTAGLANDIN E_1

Harold Clinton Kluender, Madison, Wis., assignor to Miles Laboratories, Inc., Elkhart, Ind.

Filed May 10, 1976, Ser. No. 684,569

Int. Cl.² C07C *177/00*

U.S. Cl. 260—514 D **2 Claims**

1. A compound of the formula,

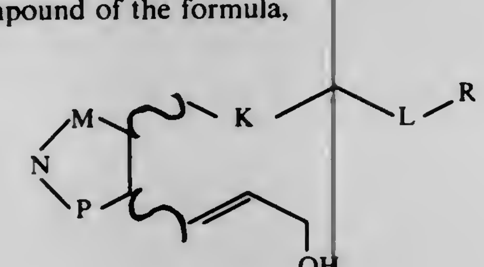

wherein:

L is methylene, ethylene, or trimethylene;

K is ethylene;

M is carbonyl;

N is methylene;

P is methylene; and

R is: carboxyl; alkoxycarbonyl, the alkyl portion of said alkoxycarbonyl being a lower alkyl; or a pharmacologically acceptable non-toxic carboxy salt.

4,065,494

15-SUBSTITUTED PROSTANOIC ACIDS

Donald Peter Strike, St. Davids, Pa., assignor to American Home Products Corporation, New York, N.Y.

Division of Ser. No. 569,026, April 17, 1975, Pat. No. 4,022,821, which is a division of Ser. No. 462,006, April 18, 1974, abandoned, which is a continuation-in-part of Ser. No. 383,007, July 26, 1973, Pat. No. 3,922,302. This application Apr. 19, 1976, Ser. No. 678,284

Int. Cl.² C07C *177/00*

U.S. Cl. 260—514 D **3 Claims**

1. A compound which is 7-(2β-[(3RS)-3-ethynyl-3-hydroxy-trans-1-octenyl]-5β-hydroxy-1α-cyclopentyl)-cis-5-heptenoic acid.

2. A compound which is 2β-[(3RS)-3-ethynyl-3-hydroxyoctyl]-5β-hydroxy-1α-cyclopentane heptanoic acid.

3. A compound which is 2β-[(3RS)-3-ethynyl-3-hydroxy-trans-1-octenyl]-5β-hydroxy-1α-cyclopentane heptanoic acid.

4,065,495

δ-SUBSTITUTED NEGAMYCIN DERIVATIVES AND SYNTHESES

Hamao Umezawa, Tokyo, and Shinichi Kondo, Yokohama, both of Japan, assignors to Zaidan Hojin Biseibutsu Kagaku Kenkyu Kai, Japan

Filed Oct. 26, 1976, Ser. No. 735,352

Claims priority, application Japan, Nov. 11, 1975, 50-134710; Jan. 1, 1976, 51-000258

Int. Cl.² C07C *109/97*

U.S. Cl. 260—534 M **3 Claims**

1. The compound having the formula

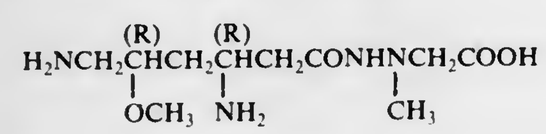

wherein each symbol (R) indicates that the carbon atom beneath said symbol has the rectus configuration, or a nontoxic salt thereof.

4,065,496

TRANS-N-ACYL-N-ALKYL-1-AMINO-1,3-BUTADIENES, TRANS-N-ACYL-N-ARYL-1-AMINO-1,3-BUTADIENES AND PREPARATION THEREOF

Wolfgang Oppolzer, Thonex, Switzerland, assignor to CHON Corporation, Cambridge, Mass.

Filed Jan. 7, 1976, Ser. No. 647,049

Int. Cl.² C07C *103/365*

U.S. Cl. 260—561 R **7 Claims**

1. A trans-compound of the formula

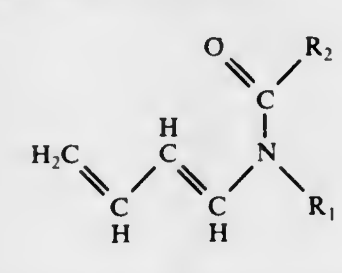

wherein R_1 is alkyl, alkylene, aryl or cycloalkyl and R_2 is alkyl or alkylene, wherein R_1 and R_2 each contain 1 to about 8 carbon atoms.

4,065,497

NOVEL DIBICYCLO [3.1.1] AND [2.2.1] HEPTYL AND DIBICYCLO [3.1.1] AND [2.2.1] HEPTENYL POLYAMINES

Nathaniel Grier, Englewood, N.J.; Richard A. Dybas, Center Square, Pa., and Robert A. Strelitz, Edison, N.J., assignors to Merck & Co., Inc., Rahway, N.J.

Continuation of Ser. No. 671,922, March 30, 1976, abandoned, which is a continuation-in-part of Ser. No. 620,721, Oct. 9, 1975, abandoned, which is a continuation-in-part of Ser. No. 540,620, Jan. 13, 1975, abandoned. This application Feb. 17, 1977, Ser. No. 769,490

Int. Cl.² C07C *5/02, 87/02, 87/16*

U.S. Cl. 260—563 P **36 Claims**

1. A compound of the formula:

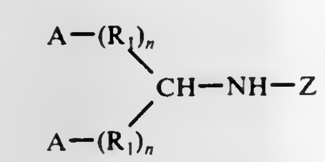

where:

each A is alike or different and is a [2.2.1] bicyclic group of the formula:

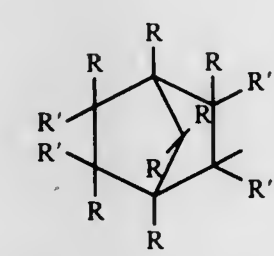

a)

or a [3.1.1] bicyclic group of the formula:

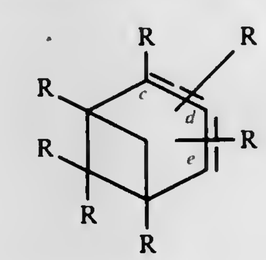

b)

where R is alike or different and is hydrogen or C_1 to C_4 alkyl, R′ is alike or different and is hydrogen or C_1 or C_4 alkyl or R′ on adjacent carbon atoms taken together comprise an olefinic bond, and the dashed line indicates either saturation or c-, d- or d-, e- unsaturation;

each R_1 is alike or different and is C_1 to C_4 alkylene:

each n is alike or different and is the integer 0 to 1;

$$Z \text{ is } -Y-\underset{\substack{|\\ R_5}}{N}-R_6,$$

where

R_5 is hydrogen, aminoethyl or aminopropyl; C_1 to C_4 hydroxyalkyl, C_2 to C_4 dihydroxyalkyl; and

R_6 is hydrogen, C_1 to C_4 hydroxyalkyl; C_2 to C_4 dihydroxyalkyl;

Y is either

$$-R_2-\underset{\substack{|\\ R_3}}{N}-R_4-$$

or $-R_2-$ where

R_2 is 2-hydroxy-1,3-trimethylene, or R_1 as previously defined;

R_3 is hydrogen, C_1 to C_4 alkyl, C_1 to C_4 aminoalkyl or C_1 to C_4 hydroxyalkyl, C_2 to C_4 dihydroxyalkyl;

R_4 is 2-hydroxy-1,3-trimethylene, or R_1 as previously defined;

or when R_3 and R_6 taken together are ethylene, R_4 is also ethylene, and R_5 is aminoethyl, aminopropyl or aminohydroxypropyl, and acid addition salts thereof.

4,065,498

MULTIPLE METAL DEACTIVATORS, METHOD FOR PREPARING, AND USE THEREOF

Theodore C. Shields, Ashland, Ky., assignor to Ashland Oil, Inc., Ashland, Ky.

Division of Ser. No. 557,001, March 10, 1975, Pat. No. 4,022,835. This application Jan. 12, 1977, Ser. No. 758,642

Int. Cl.² C07C *119/00*

U.S. Cl. 260—566 F **12 Claims**

1. A method for making a metal deactivator composition comprising:

a. partially reacting in a liquid solvent at a temperature below about 200° C., an aliphatic polyamine selected from the the group consisting of ethylenediamine, 1,2-propanediamine, 1,2-diaminocyclohexane, 2,3-diaminobutane, 1,3-propanediamine, 1,3-butanediamine, 2,4-pentanediamine, 1,6-hexanediamine, diethylenetriamine and mixtures of these, with a beta-diketone selected from the group consisting of 2,4-pentanedione, 2,2,6,6-tetramethyl-3,5-heptanedione, 2,6-dimethyl-3,5-heptanedione, 3,5-heptanedione, 2,4-hexanedione, 5-methyl-2,4-hexanedione and 5,5-dimethyl-2,4-hexanedione; and

b. reacting the resulting product in a liquid organic solvent completely with salicylaldehyde at a temperature below about 60° C., the mole ratio of said beta-diketone to said aliphatic polyamine of (a) being between about 0.6 to 1 and about 1.4 to 1, the mole ratio of said salicylaldehyde of (b) to said aliphatic polyamine of (a) being between about 1.4 to 1 and about 0.6 to 1, and the ratio of the total moles of said beta-diketone and said salicylaldehyde to the total moles of said ethylenediamine being about 2 to 1.

4,065,499

LUBRICANT ADDITIVE

Robert E. Malec, Birmingham, Mich., assignor to Ethyl Corporation, Richmond, Va.

Continuation-in-part of Ser. No. 395,221, Sept. 7, 1973, abandoned, which is a division of Ser. No. 255,223, May 19, 1972, Pat. No. 3,778,371, which is a continuation-in-part of Ser. No. 138,758, April 29, 1971, abandoned. This application Sept. 15, 1975, Ser. No. 613,343

Int. Cl.² C07C *87/00*

U.S. Cl. 260—567.6 M **6 Claims**

1. A high molecular weight quaternary ammonium chloride having at least one substantially saturated poly-C_{2-4} olefin hydrocarbon group having an average molecular weight of from about 800 to about 1400 bonded to a quaternary ammonium nitrogen atom, the remaining groups bonded to said quaternary ammonium nitrogen atom being selected from the group consisting of C_{1-20} alkyl, C_{2-8} hydroxyalkyl and C_{3-20} alkenyl.

4,065,500
WATER-SOLUBLE QUATERNARY AMMONIUM AZO DYESTUFFS

Patrick J. Jefferies, Erlanger, Ky., and Nathan N. Crounse, Cincinnati, Ohio, assignors to Sterling Drug Inc., New York, N.Y.
Continuation-in-part of Ser. No. 486,180, July 5, 1974, Pat. No. 3,996,282, which is a continuation-in-part of Ser. No. 51,690, July 1, 1970, Pat. No. 3,839,426, which is a continuation-in-part of Ser. No. 777,884, Nov. 21, 1968, abandoned, which is a continuation-in-part of Ser. No. 551,868, May 23, 1966, abandoned, and Ser. No. 595,864, July 14, 1975, which is a continuation-in-part of Ser. No. 332,511, Feb. 14, 1973, Pat. No. 3,935,182, which is a continuation-in-part of Ser. No. 201,153, Nov. 22, 1971, Pat. No. 3,784,599, which is a continuation-in-part of Ser. No. 51,676, July 1, 1970, Pat. No. 3,709,903, which is a continuation-in-part of Ser. No. 777,884, , which is a continuation-in-part of Ser. No. 551,868,. This application Mar. 31, 1976, Ser. No. 672,428
Int. Cl.² C07C *87/30*
U.S. Cl. 260—567.6 M **5 Claims**

1. A compound of the formula

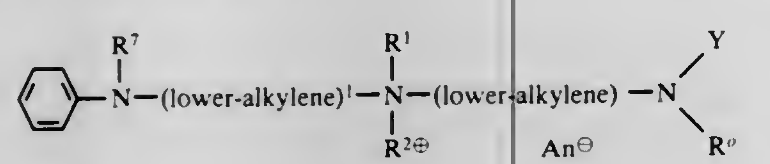

in which
R^0 is hydrogen, lower-alkyl or hydroxy-lower-alkyl;
R^1 is lower-alkyl, lower-alkenyl or hydroxy-lower-alkyl;
R^2 is lower-alkyl, lower-alkenyl, hydroxy-lower-alkyl or —(lower-alkylene)-NR^0Y;
R^7 is hydrogen or lower-alkyl;
Y is hydrogen or

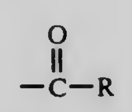

wherein R is hydrogen, lower-alkyl, lower-alkenyl, phenyl or phenyl-lower-alkyl; and
An is an anion selected from the class consisting of halide, hydroxy and nitrate.

4,065,501
BASIC ENOL ETHER AND ACID ADDITION SALTS THEREOF

Peter Emig; Hans Pohle, both of Brackwede; Gerhard Scheffler, Senne; Norbert Brock, Uerentrup; Hans-Dieter Lenke, Ludwigshafen, and Jorg Pohl, Halle, all of Germany, assignors to Asta-Werke Aktiengesellschaft, Brackwede, Germany
Filed Mar. 12, 1975, Ser. No. 557,535
Claims priority, application Germany, Mar. 22, 1974, 2413814
Int. Cl.² C07C *91/16*
U.S. Cl. 260—570.6 **4 Claims**

1. A compound selected from the group consisting of the basic enol ethers having the formula I

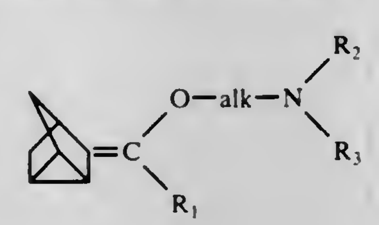

(I)

wherein R_1 represents a member selected from the group consisting of the unsubstituted phenyl group and the phenyl group substituted by members selected from the group consisting of halogen, lower alkyl having from 1 to 4 carbon atoms, nitro, trifluoromethyl, hydroxy and lower alkoxy having from 1 to 4 carbon atoms, alk is a member selected from the group consisting of the linear and branched alkylene groups having from 2 to 4 carbon atoms, and R_2 and R_3, which may be the same or different, represent members selected from the group consisting of hydrogen and alkyl having 1 to 4 carbon atoms, and the pharmacologically acceptable acid addition salts.

4,065,502
CERTAIN β-DIKETONES AND THE USE THEREOF AS METAL EXTRACTANTS

Kenneth D. MacKay, Circle Pines, and Edgar R. Rogier, Minnetonka, both of Minn., assignors to General Mills Chemicals, Inc., Minneapolis, Minn.
Division of Ser. No. 391,432, Aug. 24, 1973. This application Dec. 1, 1975, Ser. No. 636,773
Int. Cl.² C07C *49/76*
U.S. Cl. 260—590 R **3 Claims**

1. A compound of the structure

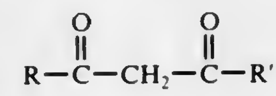

where R is phenyl and R′ is a branched chain alkyl group of 7 to 20 carbon atoms.

4,065,503
P-PHENOXY-ALKYLPHENONES AND CORRESPONDING ALCOHOLS

Faizulla G. Kathawala, West Orange, N.J., assignor to Sandoz, Inc., E. Hanover, N.J.
Division of Ser. No. 510,477, Sept. 30, 1974, Pat. No. 3,962,459, which is a continuation-in-part of Ser. No. 394,181, Sept. 4, 1973, abandoned. This application Feb. 27, 1976, Ser. No. 662,126
Int. Cl.² C07C *49/78, 49/84*
U.S. Cl. 260—592 **9 Claims**

1. A compound of the formula:

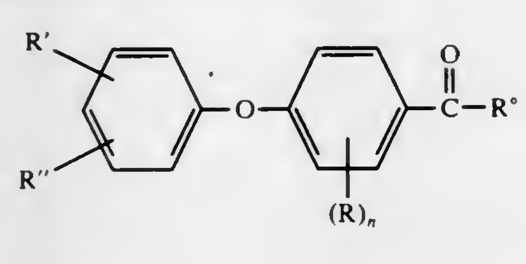

wherein
R° is branched alkyl of 3 to 5 carbon atoms,
R is hydrogen, alkyl of 1 to 4 carbon atoms or halo of atomic weight of from 18 to 36,
n is 1 or 2,
R′ is hydrogen, alkyl of 1 to 4 carbon atoms, halo of atomic weight of from 18 to 36 or alkoxy of 1 to 4 carbon atoms, and
R″ is hydrogen, alkyl of 1 to 4 carbon atoms, halo of atomic weight of from 18 to 36 or alkoxy of 1 to 4 carbon atoms, provided that
i. when R, R′ and R″ each signifies hydrogen, then R° signifies other than $—C(CH_3)_3$, $—CH(CH_3)_2$ or $—(CH_2)_2CH(CH_3)_2$ and
ii. when one of R′ and R″ signifies $CH_3O—$ in the 4-position and the other signifies hydrogen and R signifies hydrogen, then R° signifies other than $—CH_2CH(CH_3)_2$.

4,065,504
PROCESS FOR THE METHYLATION OF HYDROXYBENZENE DERIVATIVES

David Michael Findlay, Terrasse Vaudreuil, Canada, assignor to Domtar Limited, W. Montreal, Canada
Filed June 4, 1976, Ser. No. 692,788
Int. Cl.² C07C *41/00, 45/00*
U.S. Cl. 260—600 R **10 Claims**

1. A method of preparing a carbonyl-substituted alkoxybenzene comprising

a. forming a mixture consisting essentially of a carbonyl-substituted hydroxybenzene, a dialkyl sulfate and sodium carbonate, said carbonyl-substituted hydroxybenzene being one of the class consisting of hydroxybenzaldehyde, di-hydroxybenzaldehyde, vanillin, hydroxyvanillin, syringealdehyde, hydroxyveratraldehyde, acetovanillone and aceto-syringeone, and said dialkyl sulphate being one of the group consisting of dimethyl sulfate and diethyl sulfate, the molar ratios of said dialkyl sulfate and of said sodium carbonate to said hydroxybenzine being, respectively, between 1.1 and 2 to 1 and between 1 and 2 to 1,
b. heating said mixture to a fluidizing temperature at which said carbonyl-substituted hydroxybenzene and said dialkyl sulfate form a substantially homogeneous liquid medium and said sodium carbonate is suspended in said medium,
c. maintaining said mixture at a temperature at least equal to said fluidizing temperature,
d. stirring said mixture thereby to promote an alkylation reaction in said mixture and produce a carbonyl substituted alkoxybenzene from said hydroxybenzene, and
e. adding lubricating water to said mixture during said alkylation reaction in amount just sufficient to maintain said mixture stirrable during said reaction.

4,065,505
OXIDATION PROCESS

Leo Kim; Timm E. Paxson, and Sunny C. Tang, all of Houston, Tex., assignors to Shell Oil Company, Houston, Tex.
Filed Nov. 5, 1976, Ser. No. 739,155
Int. Cl.² C07C *45/00*
U.S. Cl. 260—600 R **7 Claims**

1. In the process of oxidizing meta-phenoxytoluene selectively to meta-phenoxybenzaldehyde using selenium dioxide in the presence of an inert organic solvent at a temperature between about 150° C and about 260° C and at a pressure from about 5 to about 300 psig the improvement which comprises carrying out the reaction in the presence of a drying agent selected from the group consisting of $MgSO_4$, $CaCl_2$, silicas, aluminas, alumina-silicates and molecular sieves.

4,065,506
CONTINUOUS PROCESS FOR REFINING GLYOXAL

Richard Wessendorf, Essen-Heisingen; August Sommer, Herne, and Heinrich Birkelbach, Oer-Erkenschwick, all of Germany, assignors to Veba-Chemie AG, Gelsenkirchen-Buer, Germany
Filed Apr. 30, 1975, Ser. No. 573,197
Claims priority, application Germany, June 11, 1974, 2428081
Int. Cl.² C07C *47/02*
U.S. Cl. 260—601 R **7 Claims**

1. A process for refining a crude glyoxal solution, especially one obtained by oxidation of acetaldehyde with nitric acid, containing volatile and non-volatile acids which consists essentially of:
A. Distillatively freeing the crude glyoxal solution of volatile acids, and neutralizing the resultant solution by addition of a basic agent at a temperature below 20° C;
B. Contacting the glyoxal with an alcohol having 1 to 3 carbon atoms whereby to form a glyoxal semiacetal of the formula

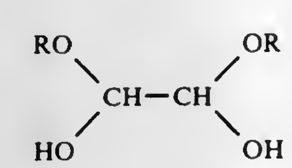

wherein R is C_1-C_3 alkyl;
C. Continuously extracting said glyoxal semiacetal with an organic solvent selected from the group consisting of benzene-benzine mixture, methylene chloride, ethylene chloride, carbon tetrachloride, toluene, ethylbenzene and cyclohexane which is immiscible with water;
D. Thereafter hydrolyzing the extracted glyoxal semiacetal by contacting the same with water.

4,065,507
PREPARATION OF METHACRYLIC DERIVATIVES FROM TERTIARY BUTYL-CONTAINING COMPOUNDS

Harley F. Hardman, Lyndhurst; James L. Callahan, Wooster, and Robert K. Grasselli, Chagrin Falls, all of Ohio, assignors to Standard Oil Company, Cleveland, Ohio
Filed Aug. 2, 1976, Ser. No. 711,014
Int. Cl.² C07C *45/16*
U.S. Cl. 260—604 R **5 Claims**

1. A process for producing methacrolein by the oxidation of a tertiary butyl-containing compound selected from the group consisting of tertiary-butyl alcohol, alkyl tertiary-butyl ether wherein the alkyl group contains from 1 to 4 carbon atoms, isobutylene dimer, isobutylene trimer and mixtures of isobutylene dimer and/or isobutylene trimer with isobutylene, in the presence of molecular oxygen and optionally in the presence of steam, at a temperature in the range of from about 200° to 600° C, and in the presence of a catalyst having the formula:

$$A_a C_c Fe_e Bi_f D_d Mo_g O_x$$

wherein
A is an alkali metal, barium, strontium, thallium, indium, silver, copper, or mixtures thereof;
C is nickel, cobalt, magesium, zinc, manganese, cadmium, calcium, or mixtures thereof;
D is phosphorus, antimony, germanium, chromium, thorium, tin, niobium, praseodymium, tungsten, boron, zirconium, cerium, arsenic or mixtures thereof; and
wherein
a is a number from 0 to 3;
c is a number from 0.001 to 12;
d is a number from 0 to 3;
e and *f* are each a number from 0.01 to 12;
g is 12; and
x is the number of oxygens required to satisfy the valence requirements of the other elements present.

4,065,508
POLYPHENOXY ALKANES

Friedrich Karrer, Basel, Switzerland, assignor to Ciba-Geigy Corporation, Ardsley, N.Y.
Filed May 14, 1975, Ser. No. 577,241
Claims priority, application Switzerland, Mar. 26, 1975, 3969/75
Int. Cl.² C07C *43/22*
U.S. Cl. 260—613 R **10 Claims**

1. A compound of the formula

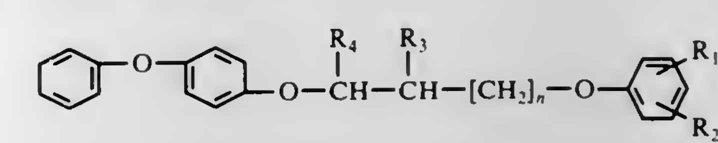

(I)

wherein
n represents the number 0, 1 or 2,
R_1 represents hydrogen, C_1-C_4-alkyl, C_1-C_2-alkoxy, C_3-C_4-alkenyloxy, C_3-C_5-alkynyloxy, or halogen,
R_2 represents hydrogen, C_1-C_3-alkyl, C_1-C_2-alkoxy or chlorine,
R_3 represents hydrogen, methyl ethyl or phenyl,
R_4 represents hydrogen or methyl.

4,065,509

SYNTHESIS OF β-METHYL DERIVATIVES OF 2,4-DICARBA-CLOSO-HEPTABORANE-7

Jerome F. Ditter, Santa Ana, and Eugene B. Klusmann, Irvine, both of Calif., assignors to The United States of America as represented by the Secretary of the Navy, Washington, D.C.

Filed May 25, 1976, Ser. No. 689,893

Int. Cl.^{2} C07F *5/02*

U.S. Cl. 260—606.5 B **6 Claims**

1. A method for B-methylating 2,4-dicarba-closo-heptaborane which comprises:

admixing 2,4-dicarba-closo-heptaborane with methyl chloride in the presence of a metal trichloride in a trichloride-heptaborane mole ratio from 0.1:1 to about 5:1 in a reaction vessel;

heating said reaction mixture to a temperature from about 30° to about 60° C;

maintaining a pressure in said reaction vessel of at least 50 psig.

4,065,510

PRODUCTION OF AN ALKENOL FROM AN ALKENE OXIDE

Gerd Schreyer; Herbert Tanner, both of Grossauheim; Wolfgang Weigert, Offenbach, and Ullrich Gora, Grossauheim, all of Germany, assignors to Deutsche Gold- und Silber-Scheideanstalt Vormals Roessler, Frankfurt, Germany

Division of Ser. No. 193,691, Oct. 29, 1971, abandoned. This application Dec. 12, 1975, Ser. No. 640,210

Claims priority, application Germany, Nov. 3, 1970, 2053915

Int. Cl.^{2} C07C *29/00*

U.S. Cl. 260—632 B **3 Claims**

1. In a process for the production of an alkenol from an alkene oxide at elevated temperature in the presence of a lithium phosphate catalyst the improvement comprising employing as the catalyst a lithium phosphate catalyst prepared by the process consisting essentially of coating molded, uniform, spherical particles of an inert carrier with particles of lithium phosphate in the presence of about 0.5 to 4 parts of moisture per part of lithium phosphate at a temperature from 10° to 130° C to produce a catalyst consisting essentially of molded, uniform, spherical particles of an inert carrier having an outer cohesive coating of the lithium phosphate.

4,065,511

ALCOHOL PRODUCTION

Hans D. Holtz, Bartlesville, Okla., assignor to Phillips Petroleum, Bartlesville, Okla.

Continuation-in-part of Ser. No. 315,824, Dec. 18, 1972, abandoned. This application Sept. 21, 1973, Ser. No. 399,491

Int. Cl.^{2} C07C *29/00, 121/34, 67/00*

U.S. Cl. 260—635 R **14 Claims**

1. A process for preparing alcohols substantially free of ethers which comprises contacting at a temperature in the range of from about 0° C to 100° C, a pressure in the range from 0.5 to about 10 atmospheres, and under an atmosphere which is substantially free of oxygen:

a. at least one organic peroxide selected from:

I. organic peroxides having the formula

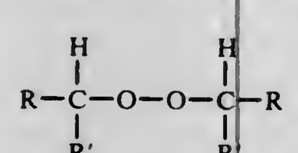

wherein R and R′ are hydrocarbyl groups selected from alkyl, cycloalkyl, and aryl groups having from 1–12 carbon atoms,

II. organic peroxides having the formula

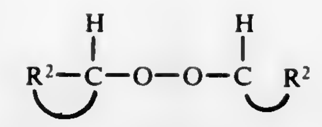

wherein R^2 is an alkylene group having 3–9 carbon atoms,

III. organic peroxides having the formula

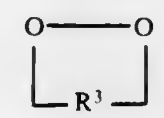

wherein R^3 is a hydrocarbyl group having from 3–10 carbon atoms,

IV. endoperoxides, and

V. polyperoxides derived from the free radical polymerization of olefinically unsaturated monomers in the presence of oxygen and wherein the olefinically unsaturated monomer is

1. a conjugated diene and the polyperoxide has repeating units of the formulas

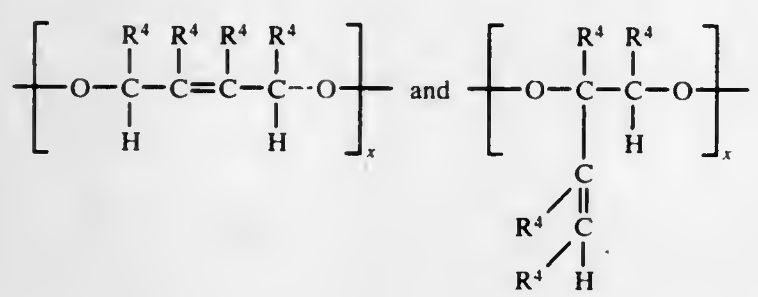

wherein x is an integer from 2 to 200 and R^4 is hydrogen or a hydrocarbyl group selected from the group consisting of alkyl, aryl, alkaryl, aralkyl, and alkaryl groups having 2–20 carbon atoms, or

2. olefins conjugated with other functional groups selected from cyano, aryl, aryloxycarbonyl, and alkyloxycarbonyl groups and the polyperoxide has repeating units of the formula

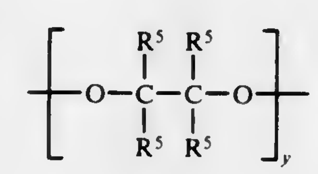

wherein y is an integer from 2–200 and R^5 is selected from hydrogen, alkyl, cycloalkyl, aryl, alkaryl, cyano, aryloxycarbonyl, and alkyloxycarbonyl groups with the proviso that at least one R^5 must be cyano, aryl, aryloxycarbonyl, alkyloxycarbonyl, or other functional group conjugated with the olefin prior to formation of the polyperoxide, with

b. a trihydrocarbylphosphine wherein the hydrocarbyl group has from 1 to 12 carbon atoms, the molar ratio of phosphine to equivalents of peroxide being at least 1, and

c. a reaction medium comprising water and a water-soluble organic solvent selected from lower alkanones, tetrahydrofuran, and 1,4-dioxane also capable of solubilizing the phosphine and peroxide, the amount of water present being at least one mole of water per equivalent of peroxide which is sufficient to insure that no ether by-product is formed but the amount of water should not exceed the amount which will cause the reaction medium to separate into two phases.

4,065,512

ISO-C$_4$ COMPOUND REACTIONS WITH PERFLUOROSULFONIC ACID RESIN CATALYSTS

William R. Cares, Houston, Tex., assignor to Petro-Tex Chemical Corporation, Houston, Tex.

Filed July 6, 1976, Ser. No. 702,948

Int. Cl.^{2} C07C *29/04;* **B01J** *27/02*

U.S. Cl. 260—641 **9 Claims**

1. A process for producing t-butanol comprising contacting isobutene and water with a membrane of a perfluorosulfonic acid resin which is the copolymer of sulfonyl fluorovinyl ether and a fluorocarbon at a temperature in the range of about 0° to 150° C, said membrane separating said isobutene and water and recovering a product containing t-butanol.

4,065,513

PROCESS FOR REMOVING ACETYLENE FROM HYDROGEN CHLORIDE GAS

Richard H. Miller, Sulphur, La., assignor to PPG Industries, Inc., Pittsburgh, Pa.

Filed Apr. 15, 1976, Ser. No. 677,465

Int. Cl.^{2} C01B *7/08;* **C07C** *21/06*

U.S. Cl. 260—656 R **9 Claims**

1. In the thermal dehydrochlorination of dichloroethane to form (1) vinyl chloride and (2) by-product hydrogen chloride substantially free of elemental chlorine wherein said by-product hydrogen chloride contains at least 200 parts per million by weight of acetylene, the improvement which comprises purifying said by-product hydrogen chloride by contacting a vaporous stream of said hydrogen chloride with activated carbon in a reaction zone free of catalytically effective amounts of acetylene hydrochlorination catalyst and added elemental chlorine at a temperature of at least 190.6° C. for a time sufficient to reduce by hydrochlorination the acetylene content thereof below 50 parts per million by weight.

4,065,514

PREPARATION OF METHANE

Burton H. Bartley, Fishkill, and John H. Estes, Wappingers Falls, both of N.Y., assignors to Texaco Inc., New York, N.Y.

Continuation-in-part of Ser. No. 272,528, July 17, 1972, abandoned. This application Nov. 28, 1975, Ser. No. 636,237

Int. Cl.^{2} C07C *9/02*

U.S. Cl. 260—676 R **12 Claims**

1. The process for preparing methane by conversion of a hydrocarbon containing at least two carbon atoms which comprises contacting in a conversion zone a mixture consisting essentially of hydrogen and said hydrocarbon with a finely-divided, high surface area catalyst consisting essentially of (a) 0.01%–99.9% of total catalytic metal content of a metal of the platinum-palladium group and (b) 0.01%–99.9% of total catalytic metal content of a metal of the iron group, said iron-group metal and said platinum-palladium group metal, each being substantially distributed throughout the body of said finely divided, high surface area catalyst; maintaining said mixture in contact with said catalyst at methane-preparing conditions including temperature of 300°–800° C, and withdrawing effluent gas containing product methane in amount more than 50% by weight from said conversion zone.

4,065,515

ALKANE ISOMERIZATION PROCESS USING A SUPPORTED PERFLUORINATED POLYMER CATALYST

James D. McClure, and Stanley G. Brandenberger, both of Houston, Tex., assignors to Shell Oil Company, Houston, Tex.

Division of Ser. No. 663,956, March 4, 1976, Pat. No. 4,038,213. This application Apr. 1, 1977, Ser. No. 783,523

Int. Cl.^{2} C07C *5/30*

U.S. Cl. 260—683.68 **8 Claims**

1. An isomerization process which comprises contacting a C_4 to C_8 normal paraffin feedstock at a reaction temperature of between about 125° and about 225° C in the presence of a catalyst composition comprising a solid, perfluorinated polymer catalyst supported on an inert porous carrier having an average pore diameter of between about 50 A and about 600 A in a weight ratio of catalyst to support of between about 0.1:100 and about 20:100 wherein said catalyst contains a repeating structure selected from the group of:

a)

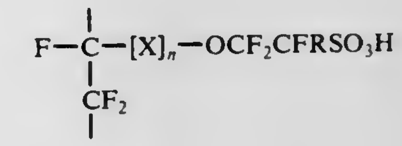

or

b)

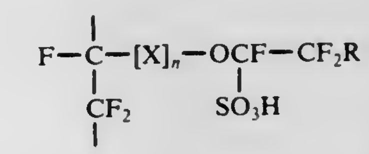

where n is 0, 1 or 2; R is a radical selected from the group consisting of fluorine and perfluoroalkyl radicals having from 1 to 10 carbon atoms; and X is selected from the group consisting of:

, $[O(CF_2)_m]$, $[OCF_2CFY]$ or $[OCFYCF_2]$

where m is an integer from 2 to 10 and Y is a radical selected from the class consisting of fluorine and the trifluoromethyl radical.

4,065,516

COMBINATION ISOMERIZATION-ALKYLATION PROCESS

John F. Moser, Jr., and William C. Behrmann, both of Baton Rouge, La., assignors to Exxon Research and Engineering Company, Linden, N.J.

Filed Dec. 19, 1975, Ser. No. 642,538

Int. Cl.^{2} C07C *3/54*

U.S. Cl. 260—683.47 **8 Claims**

1. In an alkylation process which comprises contacting a feed containing linear pentene-1 and linear pentene-2 with a paraffin at alkylation conditions in the presence of a catalyst comprising a strong acid selected from the group consisting of halosulfuric acid, trihalomethanesulfonic acid and mixtures thereof, the improvement which comprises (1) contacting said feed with an isomerization catalyst at isomerization conditions to convert at least a portion of said pentene-2 to pentene-1 prior to subjecting said feed to alkylation conditions and (2) recovering an alkylate of enhanced octane number relative to the alkylate obtained in the absence of the isomerization step (1).

4,065,517

FLAME RETARDANT POLYSULFONE COMPOSITION

Naotake Okada, and Takeshi Iwabuchi, both of Ichihara, Japan, assignors to Nissan Chemical Industries Ltd., Tokyo, Japan

Filed Apr. 14, 1976, Ser. No. 676,870

Int. Cl.^{2} C08K *5/53*

U.S. Cl. 260—823 **3 Claims**

1. A polyphosphonate-polyarylenepolyether polysulfone composition which comprises:

1 to 20 wt.% of a polyphosphonate having the formula:

(I)

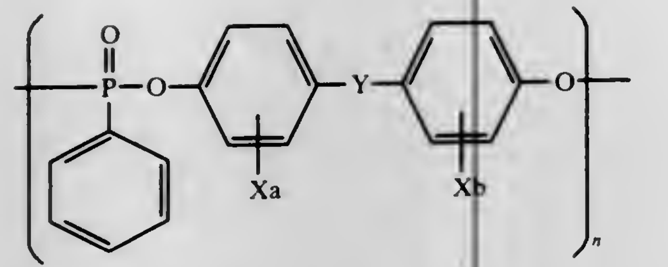

wherein X represents Br or Cl; Y represents a C_{1-8} alkylidene group or sulfone group; *a* and *b* are respectively integers of 1 to 4 and *n* is an integer of 2 to 100; and a polyarylenepolyether polysulfone of the formula:

(II)

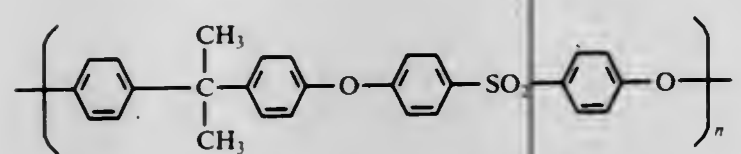

(III)

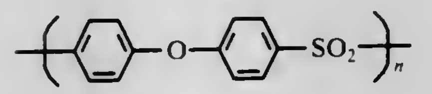

or

(IV)

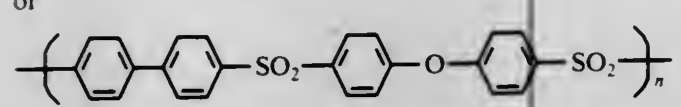

wherein *n* is an integer of 10 to 200; or a mixture thereof.

4,065,518

POWDER PAINT BLEND OF EPOXY AND AMIDE-FUNCTIONAL COPOLYMER AND ANHYDRIDE-FUNCTIONAL COPOLYMER

Santokh S. Labana, Dearborn Heights, and Ares N. Theodore, Farmington, both of Mich., assignors to Ford Motor Company, Dearborn, Mich.

Division of Ser. No. 426,164, Dec. 19, 1973, Pat. No. 3,959,405. This application Feb. 18, 1976, Ser. No. 659,175

The portion of the term of this patent subsequent to Dec. 25, 1990, has been disclaimed.

Int. Cl.² C08L *63/10*

U.S. Cl. 260—836 **2 Claims**

1. In a thermosettable powder paint which exclusive of pigments, catalysts, antistatic agents, and plasticizers, the same being conventional non-reactive additives to a thermosettable powder paint, consists essentially of a coreactable particulate mixture of

A. an epoxy-functional copolymer of monoethylenically unsaturated monomers consisting essentially of about 5 to about 20 weight percent of a glycidyl ester of a monoethylenically unsaturated carboxylic acid and about 80 to about 95 weight percent of other monoethylenically unsaturated monomers, and having a glass transition temperature in the range of about 50° C. to about 90° C. and a molecular weight in the range of about 1500 to about 15,000,

B. as crosslinking agent, an anhydride functional copolymer,

C. 0.05 to about 4 weight percent of a non-reactive polymeric flow control agent based on the weight of said coreactable particulate mixture,

the improvement wherein:

1. said epoxy-functional copolymer is qualitatively difunctional and said other monoethylenically unsaturated monomers consist essentially of difunctional monomers selected from the group consisting of acrylamide and methacrylamide in an amount comprising about 2 to about 10 weight percent of said copolymer and monoethylenically unsaturated monomers consisting essentially of monofunctional monomers selected from the group consisting of esters of a $C_1 - C_8$ monohydric alcohol and acrylic acid, esters of a $C_1 - C_8$ monohydric alcohol and methacrylic acid and $C_8 - C_{12}$ monovinyl hydrocarbons, and

2. said anhydride-functional copolymer has molecular weight in the range of about 1500 to about 15,000 and is a copolymer of about 5 to about 20, weight percent of an anhydride of an olefinically unsaturated dicarboxylic acid and about 80 to about 95 weight percent of alpha-beta, monoethylenically unsaturated, quantitatively and qualitatively monofunctional monomers selected from the group consisting of esters of a $C_1 - C_8$ monohydric alcohol and a monocarboxylic acid selected from acrylic acid and methacrylic acid and $C_8 - C_{12}$ monovinyl hydrocarbons, said esters of a $C_1 - C_8$ monohydric alcohol and a monocarboxylic acid comprising in excess of 50 weight percent of said anhydride-function copolymer, and is present in said coreactive particulate mixture in an amount that provides about 0.4 to about 1.4 anhydride groups per functional group on said epoxy-functional copolymer.

4,065,519

PROCESS FOR COATING FINE POWDERS WITH A NYLON AND PRODUCTS MADE THEREWITH

Robert B. Koch, Reading, Pa., assignor to Rilsan Corporation, Glen Rock, N.J.

Division of Ser. No. 593,108, July 3, 1975, which is a continuation-in-part of Ser. No. 509,008, Sept. 25, 1974, abandoned, which is a continuation-in-part of Ser. No. 435,944, Jan. 23, 1974, abandoned. This application Apr. 5, 1976, Ser. No. 673,644

Int. Cl.² C08L *77/00*

U.S. Cl. 260—857 TW **25 Claims**

1. A method of making a shaped structure composed of a nylon binder and a material in particle form, substantially each individual particle of the material being surrounded by the binder to form a coated powder, the shaped structure having substantially no particle to particle contact and having distribution of the nylon binder substantially uniform throughout, comprising:

A. charging into a forming apparatus the coated powder of the material particles coated with the nylon, the nylon being one which adheres to the individual material particles and is capable of being drawn into a filament or fiber and being a polyamide wherein the recurring amide groups are separated from each other by an alkylene radical having from 3 to 12 contiguous carbon atoms,

1. the coated powder being substantially in the form of agglomerates of individually coated particles of the material,

2. the coated powder comprising individual particles of the material having a size from about 1 millimicron to about 500 microns and having a substantially uniform coating of nylon, the material particles being insoluble in solvents which dissolve the nylon, the nylon coating representing at least 2% based on the weight of the coated powder;

B. compressing the coated powder in the forming apparatus at a pressure of about 200 – 100,000 psi to bind and form the coated particles into the shaped structure; and

C. recovering the shaped structure from the forming apparatus.

4,065,520

GRADIENT POLYMERS OF TWO OR MORE ALPHA MONO-OLEFINIC MONOMERS CAPABLE OF POLYMERIZING WITH THEMSELVES AND EACH OTHER

Frederick Eugene Bailey; Werner Claus von Dohlen, both of Charleston, W. Va.; Markus Matzner, Edison, N.J.; Robert Hayward Young, Somerville, N.J., and Lloyd Mahlon Robeson, Whitehouse Station, N.J., assignors to Union Carbide Corporation, New York, N.Y.

Filed June 4, 1976, Ser. No. 692,923

Int. Cl.² C08F *10/00, 297/08*

U.S. Cl. 260—878 B **20 Claims**

1. Polymer of at least two different olefinic monomers capable of polymerizing with themselves and each other, said polymer comprising a plurality of polymer chains along which the proportion of mer units provided by a first said monomer for a given first chain length gradually increases as the proportion of mer units provided by a second said monomer along said first chain length gradually decreases to a second chain length along which the proportion of mer units provided by said first and second monomers, respectively, remain substantially constant throughout said second chain length.

4,065,521

ACRYLATE-BUTADIENE GRAFT COPOLYMERS AND REINFORCED PLASTIC COMPOSITIONS CONTAINING SUCH COPOLYMERS

Donald R. Lachowicz, Fishkill, and Charles B. Holder, Wappinger Falls, both of N.Y., assignors to Texaco Inc., New York, N.Y.

Continuation-in-part of Ser. No. 335,858, Feb. 26, 1973, abandoned, and a continuation-in-part of Ser. No. 335,857, Feb. 26, 1973, abandoned. This application Nov. 22, 1974, Ser. No. 526,200

Int. Cl.² C08L *9/00, 23/00*

U.S. Cl. 260—879 **1 Claim**

1. A graft copolymer comprising a backbone polymer having a hydrocarbon chain portion and a plurality of pendant hydrocarbon groups each containing a moiety of the formula:

$$-\underset{|}{C}=\overset{\overset{\displaystyle R^a}{|}}{C}-R^b$$

wherein R^a and R^b are independently selected from the group consisting of hydrogen and alkyl of from 1 to 16 inclusive carbon atoms, having graft thereon an acrylate of the formula:

$$CH_2=\overset{\overset{\displaystyle R^c}{|}}{C}-COOR^d$$

wherein R^c is selected from the group consisting of hydrogen and alkyl of from 1 to 3 inclusive carbon atoms and R^d is alkyl of from 1 to 30 inclusive carbon atoms, to form a graft copolymer, wherein the said backbone polymer is 1,2-polybutadiene and wherein about 5 to about 80 percent by weight of the graft copolymer is 1,2-polybutadiene with the balance being the said acrylate.

4,065,522

IONIC SULFONATE-MODIFIED THERMOPLASTIC RESINS

Charles Louis Myers, Belpre, Ohio, and Michael Kent Rinehart, Parkersburg, W. Va., assignors to Borg-Warner Corporation, Chicago, Ill.

Filed Sept. 7, 1976, Ser. No. 720,534

Int. Cl.² C08L *51/04*

U.S. Cl. 260—880 R **4 Claims**

1. A thermoplastic copolymer composition comprising: graft polymers containing from 5 to 95 wt.%, based on final polymer of at least one vinyl monomer selected from the group consisting of styrene, alphamethylstyrene vinyl toluene, acrylonitrile, methacrylonitrile, the lower alkyl esters of acrylic acid and the lower alkyl esters of methacrylic acid, and from 15 to 1 wt.% based on final polymer of a monomer selected from the group consisting of the Group II and Group III metal salt of a copolymerizable ethylenically-unsaturated sulfonic acid as grafting monomer, said grafting monomers copolymerized in the presence of from 95 to 5 wt.%, based on final polymer, of a rubbery substrate polymer selected from the group consisting of polybutadiene, styrenebutadiene copolymers containing up to 50% by weight styrene, and rubbery C_2–C_8 alkyl acrylate copolymers.

4,065,523

PROCESS FOR INCREASING MOLECULAR WEIGHT OF A POLYMER

Thomas W. Hutton, Doylestown, and Pamela J. Rogers, North Wales, both of Pa., assignors to Rohm and Haas Company, Philadelphia, Pa.

Filed Nov. 24, 1975, Ser. No. 634,816

Int. Cl.² C08L *31/02*

U.S. Cl. 260—885 **12 Claims**

1. A process for preparing an adhesive from copolymers A and B, the composition comprising:

(A) from about 5 to about 95 parts by weight of an addition copolymer having a Tg in the range of from 0° to −85° C. comprising:

1. from about 85 to 99.5 parts by weight of a monomer or monomers selected from alkyl (C_2-18) or alkoxyalkyl acrylate and

2. from about 0.5 to about 15 parts by weight of an ethylenically unsaturated amine, carboxylic acid, sulfonic acid, or mixtures thereof, with

B. from about 5 to about 95 parts by weight of an addition copolymer having a Tg in the range of from about 20° to 150° C. comprising:

1. from about 85 to about 99.5 parts by weight of a monomer or monomers selected from a monomer of the formula:

$$CH_2=\overset{\overset{\displaystyle R}{|}}{C}-CO_2R^1$$

wherein R is hydrogen or methyl and R^1 is lower alkyl, lower cycloalkyl or isobornyl and

2. from about 0.5 to about 15 parts by weight of an ethylenically unsaturated amine, carboxylic acid or sulfonic acid or mixtures thereof, which comprises the steps of:

a. polymerizing the monomers to form copolymer B by gradual addition, solution polymerization in an organic solvent at reflux in the presence of 0 to 5 parts of water per 100 parts of the monomers used to make copolymer B

b. adding to copolymer B 0 to 5 parts of water per 100 parts of monomer to be added in step (c) and then

c. adding to copolymer B the monomer mix which is to be polymerized to form copolymer A,

d. and polymerizing the monomer mix added in step (c);

at least 0.1 parts of water being present during the polymerization of one or both of copolymers A and B.

4,065,524
FILM-FORMING LIGHT-SENSITIVE POLYMERIC MATERIAL CARRYING AZIDOSULFONYL GROUPS
Urbain Leopold Laridon; Gerard Albert Delzenne, both of Wilrijk-Antwerp, Belgium; Helmut Mäder, Leverkusen, Germany; Hans Ulrich, Leverkusen, Germany, and Bernhard Seidel, Cologne-Mulheim, Germany, assignors to AGFA-GEVAERT N.V., Mortsel, Belgium
Continuation of Ser. No. 463,851, June 14, 1965, abandoned. This application Mar. 17, 1975, Ser. No. 558,622
Claims priority, application United Kingdom, June 15, 1964, 24760/64
Int. Cl.² C08G *75/18, 75/30*
U.S. Cl. 260—895 **12 Claims**

1. A film-forming light-sensitive polymeric material consisting essentially of one or two polymers, which is soluble before exposure to actinic light in an organic solvent or water and which becomes insoluble in said organic solvent or water when exposed to actinic light and having carried on said polymer or polymers (A) azidosulphonyl groups, and (B) a component which is reactive with moieties obtained upon the photochemical decomposition of azidosulphonyl groups by exposure to actinic light, said reactive component being selected from the group consisting of a hydroxyl radical, pyridine, a phenyl radical, and pyrrolidone, said (A) and (B) each being present in said polymeric material in an amount sufficient to, upon exposure of said polymeric material to actinic light, photochemically cross-link and render said polymeric material insoluble in said organic solvent or water.

4,065,525
INHIBITION OF CRYSTALLIZATION OF O-ETHYL-O-(4-NITROPHENYL)-PHENYLPHOSPHONOTHIOATE
Ralph Forrest May, Wilmington, Del., assignor to E. I. Du Pont de Nemours and Company, Wilmington, Del.
Filed Sept. 16, 1976, Ser. No. 723,956
Int. Cl.² C07F *9/40*
U.S. Cl. 260—989 **9 Claims**

1. A method of inhibiting crystallization of O-ethyl-O(4-nitrophenyl)-phenylphosphonothioate at temperatures in the range between (−) 6° C. and 25° C. comprising maintaining therein between about 6 and about 12% by weight of bis-(O-4-nitrophenyl)-phenylphosphonothioate.

4,065,526
FUEL INTRODUCTION DEVICE FOR INTERNAL COMBUSTION ENGINE
Robert Dixon Englert, Corona Del Mar, and Kenneth Ronald Armstrong, Lakewood, both of Calif., assignors to Dresser Industries, Inc., Dallas, Tex.
Continuation-in-part of Ser. No. 660,608, Feb. 23, 1976, abandoned, which is a division of Ser. No. 384,166, July 30, 1973, abandoned. This application May 28, 1976, Ser. No. 691,168
Int. Cl.² F02M *9/02*
U.S. Cl. 261—62 **1 Claim**

1. In combination with an air-liquid induction device that includes an intake air duct having a converging portion, a variable area throat portion of rectangular cross-section through which a mixture of air and finely divided liquid is passed at sonic velocity and a fuel supply, a fuel dispensing and air flow shaping device including in combination:

a. an elongated distributor body positioned upstream of the throat and extending within said air duct in a direction parallel to the longer axis of the rectangular throat, said distributor body having upstream and downstream edges and being positioned at an intermediate location within said air duct to divide the flow of air into converging streams;
b. means forming a plurality of displaced fuel openings in said distributor body extending longitudinally therealong and terminating along the downstream edge thereof and adapted to discharge fuel therefrom in a plurality of coherent liquid streams;
c. means forming an internal passage within said distributor body and connected to said fuel supply communicating with the openings for the passage of liquid fuel; and

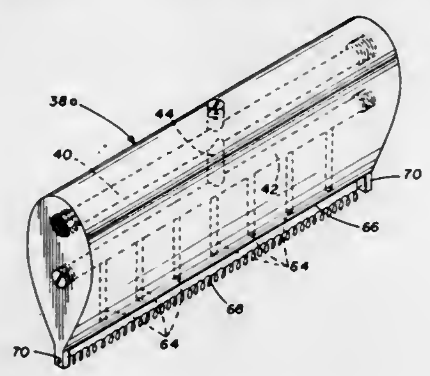

d. a wire means attached to the distributor body spaced from and adjacent said openings downstream thereof within the converging portion of the intake air duct, said wire means extending helically coiled along the entire length of said body transversely of the direction of air flow and effective to receive fuel from said openings for the fuel to spread along its length as a thin film so that such fuel may be stripped off by the converging air streams.

4,065,527
METHOD AND APPARATUS FOR INTERACTION OF GAS AND LIQUID
David A. Graber, 315 Haight St., Menlo Park, Calif. 94025
Filed Feb. 19, 1976, Ser. No. 659,292
Int. Cl.² B05B *7/10*
U.S. Cl. 261—79 A **22 Claims**

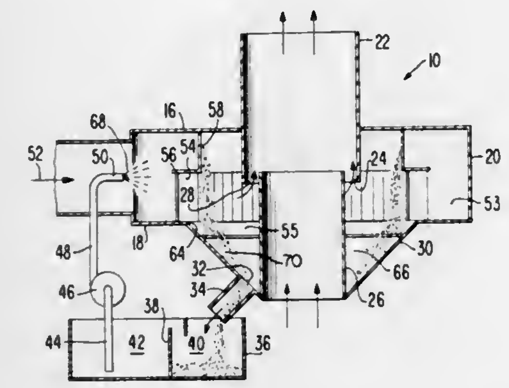

1. Apparatus for creating an interaction between a gas and a liquid comprising: a housing having a gas inlet, a gas outlet and means defining a circular path of travel for a gas between the inlet and outlet, said housing further having a pair of vertically spaced members, the lower member having an annular portion defining a generally continuous inner periphery, there being structure coupled to and extending downwardly from said lower member, and a plurality of spaced vanes mounted in fixed positions within the housing between said members, each of said vanes projecting inwardly of said inner periphery of the lower member, said vanes being at acute angles relative to each other and arranged in a circular pattern in surrounding relationship to a central, liquid-receiving space in the housing, the central space communicating with the outlet, the spaces between the vanes defining fluid passages in flow communication with said central space and in fluid communication with said path and extending substantially along said path, there being means coupled with the housing for introducing a liquid thereinto, whereby a gas flowing through said fluid passages and into said central space will create a vortex action in the latter to cause a liquid therein to move upwardly with respect to said structure past said inner periphery and to enter said fluid passages to thereby form a penetrable liquid curtain extending across the fluid passages for contact with the gas as it flows from said path into said central space.

4,065,528
COLUMN APPARATUS FOR GAS-LIQUID HEAT AND MASS EXCHANGE PROCESSES
Ivan Petrovich Slobodyanik, ulitsa Gagarina, 87, kv. 15, Krasnodar, U.S.S.R.
Filed May 25, 1976, Ser. No. 690,041
Int. Cl.² B01F *3/04*
U.S. Cl. 261—114 R **5 Claims**

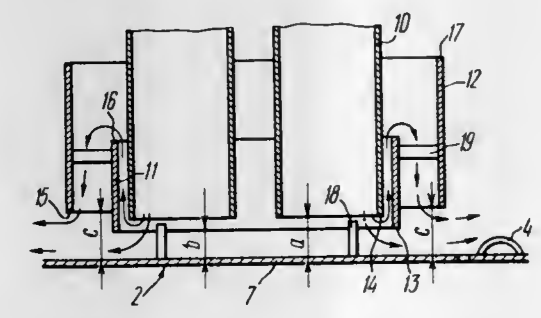

1. A column apparatus for gas-liquid heat and mass exchange processes, comprising: a casing; contact plates arranged in said casing one above another and each being constituted as a horizontal plate having a center solid portion and slots distributed over the rest of the plate area for the passage of gas therethrough; annular pocket forming means for collecting liquid flowing off said contact plates, fixed around said contact plates; discharge pipes for discharging liquid from each of said contact plates onto the contact plate therebelow; said discharge pipes having upper ends connected to said annular pocket forming means of said upper contact plate; said discharge plates having lower ends terminating slightly above said solid center portion of the lower contact plate; inner and outer spaced coaxial rings surrounding said lower ends of said discharge pipes, said rings being arranged in spaced relation above said solid center portion of the contact plate; said inner ring having a bottom edge extending below the level of the bottom edge of said discharge pipes and below the bottom edge of the outer ring, said inner ring having a top edge arranged above the level of said bottom edge of said discharge pipes and below the top edge of said outer ring, in such a manner that as the liquid is being discharged, there is formed a hydroseal.

4,065,529
PROCESS FOR SPHEROIDIZATION OF RDX CRYSTALS
Roger R. Lavertu, Ste-Foy, and Antonin Godbout, Charlesbourg, both of Canada, assignors to The United States of America as represented by the Secretary of the Army, Washington, D.C.
Filed Jan. 5, 1976, Ser. No. 646,838
Claims priority, application Canada, Jan. 13, 1975, 217770
Int. Cl.² C06B *21/00*
U.S. Cl. 264—3 E **8 Claims**

1. A method for the production of spheroids of cyclotrimethylenetrinitramine from angular crystals, comprising the steps of agitating angular crystals of cyclotrimethylenetrinitramine having a particle size of at least 70 microns in a cyclohexanone medium saturated with RDX at an initial temperature,

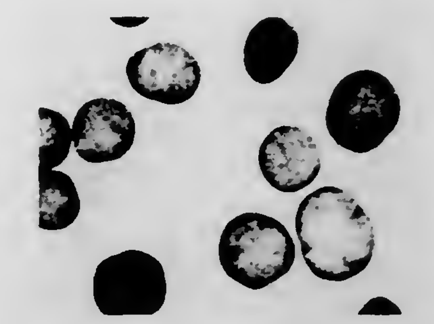

with heating of the solution, followed by separation of the crystals from the heated solution.

4,065,530
METHOD FOR MOLDING PRODUCTS FROM POLYMERIC MATERIAL
Paul R. Schaeffer, Paoli, Pa., assignor to The Alan I W Frank Corporation, Exton, Pa.
Filed May 17, 1976, Ser. No. 686,841
Int. Cl.² B29D *27/00*
U.S. Cl. 264—41 **4 Claims**

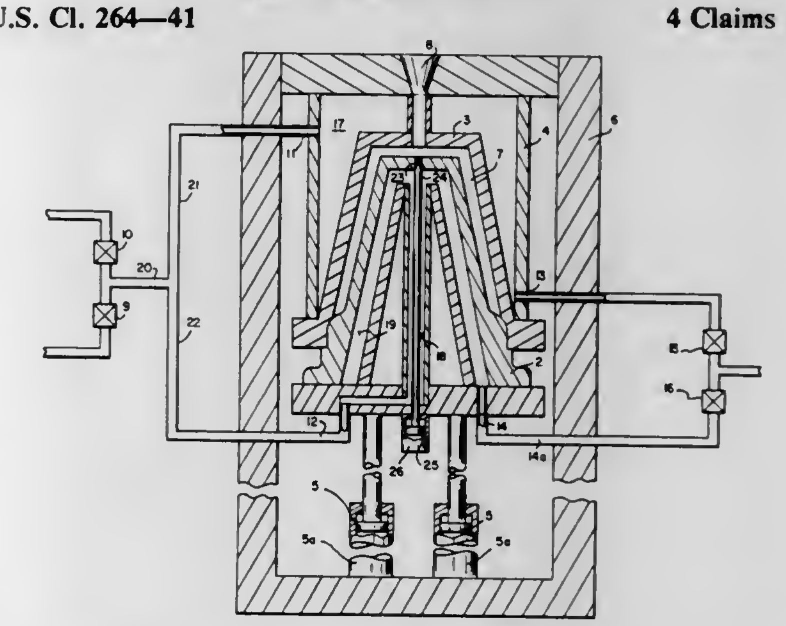

1. In a method for molding products in a mold cavity formed by a male and female mold element which method includes the steps of closing the mold elements to form the cavity, filling said cavity with polymeric beads, heating said mold elements and injecting steam into the cavity through the male mold element, the improvement in said method comprising:

a. introducing steam into spaces or channels in said mold elements during closing of said elements and permitting said steam to flow therethrough and heat said elements;
b. terminating the discharge of steam from the female element while commencing the filling of the mold cavity with said polymeric beads;
c. continuing the flow of steam through said male element and terminating the discharge of steam from the male element not later than the injection of steam into the mold cavity; and
d. terminating the flow of steam to both of said elements after said injection of steam.

4,065,531
METHOD FOR MOLDING PRODUCTS FROM PARTICULATE POLYMERIC MATERIAL
Paul R. Schaeffer, Paoli, Pa., assignor to The Alan I W Frank Corporation, Exton, Pa.
Filed May 17, 1976, Ser. No. 686,982
Int. Cl.² B29D *27/00*
U.S. Cl. 264—41 **4 Claims**

1. In a method for molding products in a mold cavity formed

by a male and female mold element which method includes the steps of closing the mold elements to form the cavity, heating said elements, filling said cavity with polymeric beads, injecting steam into the cavity and cooling said elements, the improvement in said method comprising:

a. simultaneously introducing steam into both of said mold elements through spaces or channels therein while closing said elements to form said cavity;
b. terminating the direct introduction of steam into said female mold element during mold element closing when steam begins to discharge from said male mold element and directing the steam discharged from said male mold element into the female mold element;

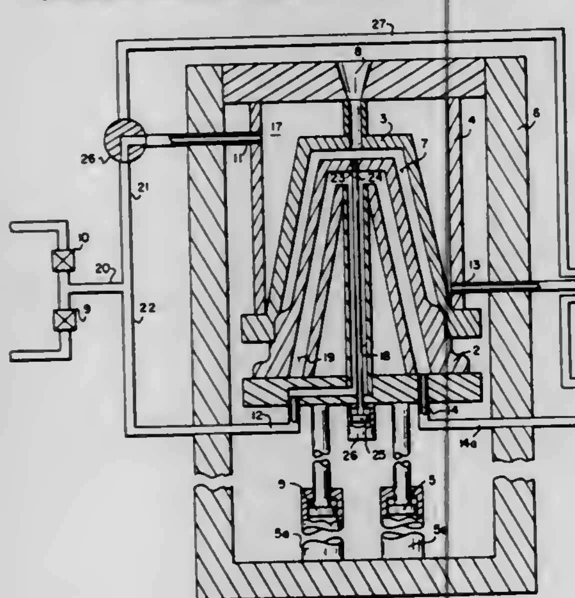

c. filling said cavity with said polymeric beads;
d. terminating the discharge of steam from said female mold element not later than the injection of steam into said mold cavity;
e. injecting steam into the mold cavity to mold said product;
f. terminating the introduction of steam into said male mold element and directly introducing into each of said mold elements a cooling fluid and permitting said fluid to separately flow through each of said elements; and
g. terminating said flow of cooling fluid, opening said mold elements and removing said molded product.

4,065,532
PROCESS FOR THE ADMIXTURE OF ADDITIVES INTO PLASTICS WITH SIMULTANEOUS REMOVAL OF VOLATILE CONSTITUENTS

Hans Wild, Frankenthal; Guenter Jeckel, Landau; Adolf Echte, Ludwigshafen; Johann Zizlsperger, Schriesheim; Rudi Wilhelm Reffert, Beindersheim, and Gunter Thielen, Ludwigshafen, all of Germany, assignors to BASF Aktiengesellschaft, Ludwigshafen, Germany

Filed Apr. 3, 1975, Ser. No. 564,618
Claims priority, application Germany, Apr. 11, 1974, 2417792; Feb. 19, 1975, 2507061; Mar. 6, 1975, 2509744
Int. Cl.² B29B *1/04, 1/10*

U.S. Cl. 264—68 **9 Claims**

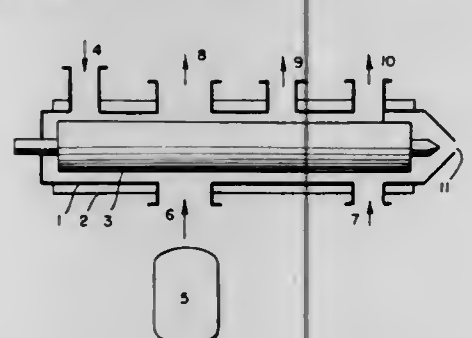

1. In a process for the admixture of additives to thermoplastically processable polymers containing volatile constituents, with simultaneous removal of the volatile constituents, through separately feeding additives and a polymer melt, solution or dispersion into a horizontal devolatilizing screw extruder, and then heating, mixing and conveying the charge whilst vaporizing the volatile constituents, and finally extruding the mixture, the improved steps taken in sequence in the direction of flow along the extruder which comprise:

first introducing the additives downwardly into the extruder from above;
then introducing the polymer in a liquid form as said melt, solution or dispersion, preheated to a temperature of from 150° to 250° C, upwardly into the extruder from below under a pressure which corresponds at least to the vapor pressure of the volatile constituents at the temperature concerned, thereby immediately vaporizing said volatile constituents;
simultaneously withdrawing at least 50 percent of the volatile constituents upwardly from the extruder at an orifice located approximately vertically above the point at which the polymer is being introduced from below; and
advancing the polymer forwardly from its point of introduction under shear by the screw so that the cooling of the polymer due to said vaporization is compensated by the simultaneous heating of the polymer in the screw extruder which is increased by transfer of shear energy from the screw.

4,065,533
PROCESS FOR THE CONTINUOUS PRODUCTION OF SILICON RODS OR TUBES BY GASEOUS DEPOSITION INTO A FLEXIBLE WOUND BAND

Franz Koppl, Altotting; Rudolf Griesshammer, and Helmut Hamster, both of Burghausen, all of Germany, assignors to Wacker-Chemitronic Gesellschaft fur Elektronik Grundstoffe mbH, Burghausen, Germany

Filed Mar. 9, 1977, Ser. No. 776,025
Claims priority, application Germany, Apr. 27, 1976, 2618398
Int. Cl.² B01J *8/00;* **C01B** *33/02*

U.S. Cl. 264—81 **9 Claims**

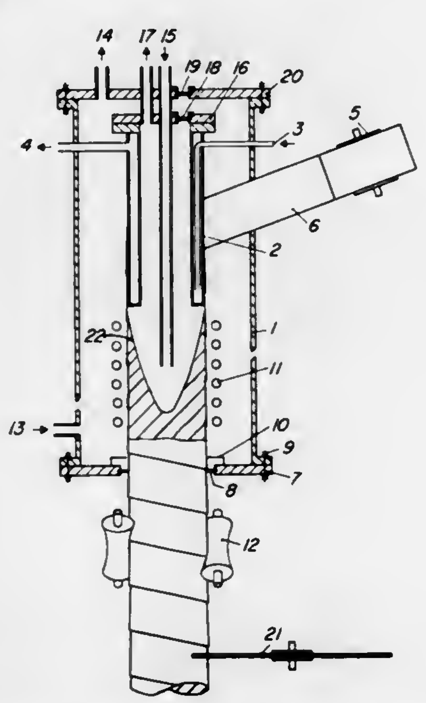

1. A process for the continuous production of silicon rods or tubes by the deposition of silicon from a gaseous mixture on the inner wall of a carrier tube heated to the deposition temperature, which comprises the steps of

a. cooling a hollow metal cylinder having one open end in a reactor;
b. continuously winding around the hollow metal cylinder a flexible band substantially resistant to silicon at the deposition temperature, in an overlapping manner and at an angle of pitch from 5° to 40°, so as to form a carrier tube for the silicon to be deposited;
c. continuously drawing the tube off the metal cylinder by a rotary traction movement and heating the portion of the

tube adjacent the metal cylinder and still in the reactor to the deposition temperature of about 1,050° to 1,250° C;
d. at the same time passing said gas mixture for decomposition through the tube under a pressure exceeding the external atmospheric pressure by 0.01 to 1 bar, thus causing the inside of the tube gradually to be filled at least partly with silicon as the decomposition of the gas mixture proceeds; and
e. continuously withdrawing the Si-filled tube from the reactor at the open end thereof and obtaining the silicon rod or tube by the removal of the carrier tube.

4,065,534
METHOD OF PROVIDING A RESIN REINFORCED ASBESTOS DIAPHRAGM

Thomas A. Rechlicz, and Bernard A. Maloney, both of Corpus Christi, Tex., assignors to PPG Industries, Inc., Pittsburgh, Pa.

Filed Apr. 20, 1976, Ser. No. 678,561
Int. Cl.² C25B *13/06*

U.S. Cl. 264—91 **5 Claims**

1. In a method of preparing an asbestos diaphragm containing a thermoplastic hydrophobic resin which method comprises forming a fibrous chrysotile asbestos mat having the resin therein and thereafter heating the mat to melt said resin, the improvement wherein said resin is capable of being oxidized and degraded when heated above the crystalline melting point thereof in the presence of asbestos, and which method comprises depositing said asbestos diaphragm from an aqueous slurry substantially free of alkali metal chloride and consisting essentially of from about 1 to about 30 weight alkali metal hydroxide and from about 0.1 to about 10 weight percent total asbestos and resin, wherein the resin is from about 0.2 to about 8 weight percent of the total asbestos and resin and wherein the resin is selected from the group consisting of:

A. hydrocarbon resins;
B. homopolymers having the empirical formula:

$[CY^{I}Y^{II}-CY^{III}Y^{IV}]$

and

C. copolymers having hydrocarbon and halocarbon moieties wherein the halocarbon moiety is chosen from the group consisting of halocarbons having the empirical formula:

$[CX^{I}X^{II}-CX^{III}X^{IV}]$

wherein at least 20 percent of the copolymer is the hydrocarbon moiety;
where Y^{I} is halogen chosen from the group consisting of fluorine, chlorine, and bromine, Y^{II}, Y^{III}, and Y^{IV} are chosen from the group consisting of fluorine, chlorine, bromine, and hydrogen, and at least one of said Y^{II}, Y^{III}, and Y^{IV} is hydrogen, and where X^{I} is a halogen chosen from the group consisting of fluorine, chlorine, and bromine, and X^{II}, X^{III}, and X^{IV} are chosen from the group consisting of fluorine, chlorine, bromine, and hydrogen.

4,065,535
THREAD FORMING AND NECK FINISHING PROCESS

Richard Webster Legrand, Wilmington, Del., assignor to Hercules Incorporated, Wilmington, Del.

Filed Dec. 27, 1976, Ser. No. 754,203
Int. Cl.² B29C *17/07*

U.S. Cl. 264—94 **3 Claims**

1. A process for biaxially blow molding hollow plastic articles to provide a finished neck of axially oriented material comprising:

a. heating a parison of partially crystalline orientable material to just below the material's crystalline melting point;
b. placing one end of said parison over a blow pin;
c. clamping said one end of said parison over and radially spaced from said blow pin;
d. axially stretching and orienting said parison, thereby drawing said one end of said parison down against said blow pin and reducing the thickness of said parison to a first wall thickness over said blow pin;
e. further stretching the free portion of said parison to a second wall thickness, said second wall thickness being thinner than said first wall thickness;
f. clamping mold means around said parison, said mold means having neck finishing cavities contained therein in the portion of said mold means surrounding said blow pin;

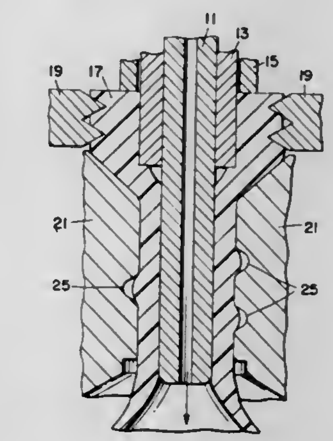

g. axially moving an inner portion of the parison in the clamped end of said parison toward said mold means, thereby forcing a portion of said oriented parison into the neck finishing cavities forming a finished neck; and
h. introducing blow air via the blow pin to radially expand the portion of said parison having said second wall thickness producing a biaxially oriented container body.

4,065,536
METHOD OF MAKING A PRECISELY PARTITIONED BULBOUS-SHAPE CONTAINER

Malcolm Bramel Lucas, Cincinnati, Ohio, assignor to The Procter & Gamble Company, Cincinnati, Ohio

Division of Ser. No. 493,308, July 31, 1974, abandoned. This application Nov. 10, 1975, Ser. No. 630,105
Int. Cl.² B29C *17/07*

U.S. Cl. 264—98 **1 Claim**

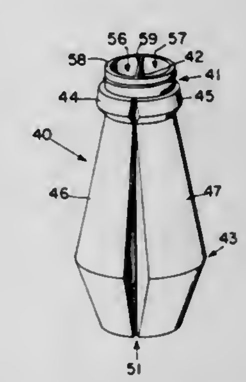

1. A method of making a bulbous-shape open-top container of unitary construction of thermoplastic material which container is precisely partitioned by a longitudinally extending internal bulkhead of predetermined size, shape and orientation, said method comprising:

providing a longitudinally partitioned preform of said thermoplastic material which preform comprises a tubular exterior wall and said internal bulkhead, said step of providing a preform comprising cutting a predetermined length from an endless longitudinally partitioned tubular extrusion comprising said tubular exterior wall and an integral longitudinally extending said internal bulkhead;
heating the body of said preform to a sufficiently high temperature equal to or greater than the thermoplastic temperature of said thermoplastic material to enable pinching one end of said preform closed and to enable blow molding said exterior wall to said bulbous-shape of said container;
pinching said one end of said preform closed prior to said blow molding; and

converting said preform into said container by blow molding said exterior wall of said preform to said bulbous-shape while constraining said bulkhead along its faces and edges, during said heating, said pinching, and said blow molding, to virtually obviate changing its size, shape, or orientation during said blow molding.

4,065,537

PROCESS FOR PRODUCING MOLDED GOLF BALLS EXHIBITING ISOMETRIC COMPRESSION

Richard Miller, Belle Mead; Murray H. Reich, and Emma Kuntz, both of Princeton, all of N.J., assignors to Princeton Chemical Research, Inc., Princeton, N.J.

Filed Aug. 7, 1975, Ser. No. 602,959

Int. Cl.^{2} B29G *1/00, 7/00*

U.S. Cl. 264—143 **9 Claims**

1. In the production of a molded golf ball wherein a cross-linkable elastomer is continuously extruded through a die to form an extrudate, said extrudate is cut into slugs of the appropriate predetermined mass, and said slugs are molded in golf ball molds to form golf balls, the improvement which comprises forming said extrudate and cutting it so as to produce approximately cylindrical slugs about 2.5 to 3.3 inches long and having substantially flat or convex top and bottom surfaces, whereby the resulting golf balls are isometric.

4,065,538

PROCESS FOR REDUCING DUST IN FIBRILLATED YARN

Kenneth C. Gustafson, Chattanooga, Tenn., and Edward L. Chastain, Lafayette, Ga., assignors to Fibron, Inc., Chattanooga, Tenn.

Filed Sept. 26, 1975, Ser. No. 616,939

Int. Cl.^{2} B29C *17/12, 17/00*

U.S. Cl. 264—154 **10 Claims**

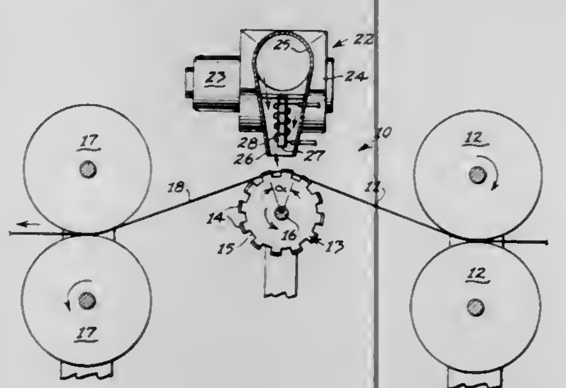

1. A process for reducing dust particles in a fibrillated tape yarn of synthetic material in which said dust particles are formed in the fibrillation of said tape yarn, comprising the steps of:

a. relatively moving fibrillated tape yarn of synthetic material past a heating station,
b. applying a critical amount of heat to said tape yarn at said heating station sufficient to fuse only said dust particles into said tape yarn,
c. said critical amount of heat being sufficient to melt said dust particles but insufficient to melt or damage said tape yarn.

4,065,539

METHOD OF MOLDING PLASTIC CONTAINERS

Murray Nadel, 433 Beechmont Drive, New Rochelle, N.Y. 10804

Continuation-in-part of Ser. No. 518,955, Oct. 29, 1974, abandoned. This application Feb. 2, 1976, Ser. No. 654,658

Int. Cl.^{2} B29D *3/00*

U.S. Cl. 264—251 **6 Claims**

1. The method of making a hinged, molded plastic compact in equipment employing cooperable, cavity-defining dies wherein one die has an inlet port for introducing molten plastic into the cavity and wherein another die has a supporting surface and a recess adjacent the same, comprising the steps of:

a. disposing a hinge part having two anchorage portions and a connecting pintle portion so that all said portions rest on said supporting surface while the dies are separated, with the pintle portion disposed in and engaged with the walls of said die recess,
b. bringing the dies together to locate portions of the die cavities adjacent one of said hinge anchorage portions, and to cause other portions of the dies to engage and closely confine the other of said anchorage portions and also said pintle portion so as to prevent the same from being surrounded and engaged by the molten plastic,
c. injecting molten plastic through the port and into the die cavities, and also into engagement with and around said

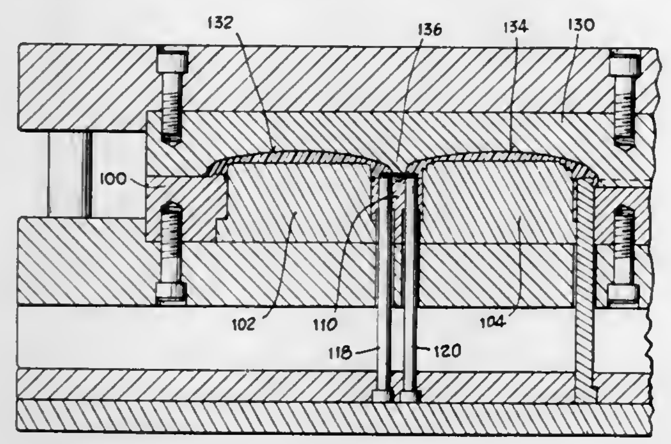

one hinge part anchorage portion to embed the same and hold the hinge part captive.

d. cooling the plastic to solidify it,
e. separating the dies from one another,
f. removing the solidified molded plastic and captive hinge part as a unitary assemblage from one of the die halves,
g. placing the assemblage comprising the solidified plastic and hinge part in another set of dies defining a cavity such that the other of the anchorage portions of the hinge part extends into a part of the defined cavity,
h. injecting molten plastic into the defined cavity whereby it flows around and embeds said other anchorage portion of the hinge part,
i. cooling the plastic to solidify it, and
j. removing the solidified plastic and said assemblage from said other dies.

4,065,540

METHOD OF PRODUCING PRECAST CONCRETE PANELS WITH BUILT-IN OUTER SASH FRAMES

Eiryo Okami, Kurobe, Japan, assignor to Yoshida Kogyo K.K., Tokyo, Japan

Filed Oct. 17, 1975, Ser. No. 623,558

Claims priority, application Japan, Oct. 19, 1974, 49-120636

Int. Cl.^{2} B28B *1/14*

U.S. Cl. 264—278 **1 Claim**

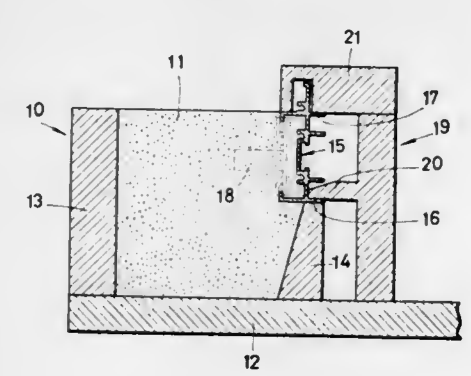

1. A method of producing a precast concrete panel with a built-in outer frame of a sash window or the like, wherein the outer sash frame has lowermost and uppermost flanges, said method comprising the steps of:

a. providing a form which has a bottom, side panels on said bottom for defining the outer periphery of the concrete panel, and raised rectangular sill-defining rest means arranged internally of the side panels on the bottom for defining the inner periphery of the concrete panel;
b. arranging a plurality of clamping fixtures in spaced positions on the inside of the rest means, each fixture including lower and upper holders arranged to face the raised rest means for downwardly clamping the lowermost and uppermost flanges, respectively;
c. placing the outer sash frame with the lowermost flange to rest on the top of the rest means in spaced relation to the bottom of the form;
d. clamping the outer sash frame downwardly onto the rest means by means of the lower and upper holders acting downwardly and independently of each other on the sash frame flanges remotely from its corners;
e. pouring concrete into a space bounded by the outer sash frame and the bottom, side panels and rest means of the form;
f. curing the concrete; and
g. after releasing the clamping fixtures, withdrawing the precast concrete panel with the built-in outer sash frame from the form.

4,065,541

METHOD OF MAKING PLASTIC CARTRIDGE CASING

George R. Eckstein, Fairfield, and William G. Moyher, Stratford, both of Conn., assignors to Remington Arms Company, Inc., Bridgeport, Conn.

Division of Ser. No. 374,336, June 28, 1973, Pat. No. 3,855,381, which is a division of Ser. No. 199,913. Nov. 18, 1974, Pat. No. 3,786,755. This application May 17, 1974, Ser. No. 470,757

Int. Cl.^{2} B29F *5/00*

U.S. Cl. 264—295 **1 Claim**

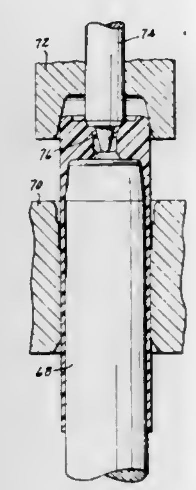

1. A method of making a primer seal for a plastic shotgun shell comprising forming of a tubular plastic body having an integral transverse base portion with a longitudinally extending primer opening therein, extruding a collar of plastic around the primer opening which projects rearwardly from the rear face of the base portion to establish a volume of plastic at the correct radial distance from the axis of the shell, forcing said plastic collar forwardly so as to position the plastic material of said collar inside said primer opening so as to form a continuous, annular gas sealing ring of oriented plastic which is integral with and has a smaller diameter than the remaining side wall of the primer opening.

4,065,542

TWO STAGE LEACHING OF LIMONITIC ORE AND SEA NODULES

Kohur Nagaraja Subramanian, Mississauga, and Gerald Vernon Glaum, Oakville, both of Canada, assignors to The International Nickel Company, Inc., New York, N.Y.

Filed May 19, 1976, Ser. No. 687,887

Claims priority, application Canada, June 10, 1975, 229007

Int. Cl.^{2} C01G *3/10, 51/10, 53/10, 45/10*

U.S. Cl. 423—35 **9 Claims**

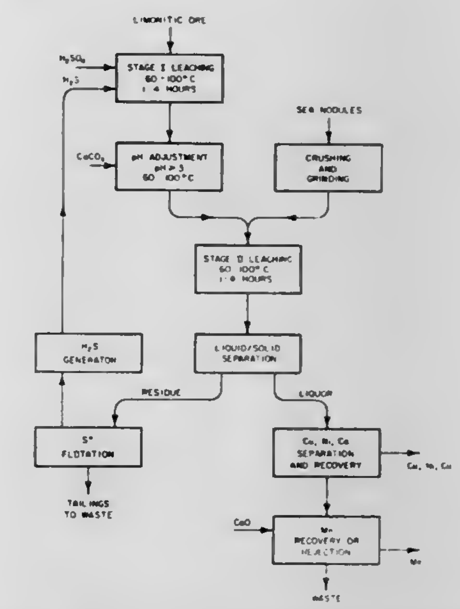

1. A multistage process for cumulatively extracting metal values from sea nodules containing a major amount of manganese and iron, manganese being present in tetravalent form, and containing a lesser amount of at least one of the nonferrous metals nickel, cobalt and copper, and from an iron oxide ore containing a major amount of iron and a minor amount of at least one of the nonferrous metals selected from the group nickel, cobalt and copper, iron being present in an oxidation stage higher than the divalent state, comprising:

a. reductively leaching said iron oxide ore in an acidic medium in the presence of a non-oxidizing acid and a reducing agent at a temperature in the range of about 25° C to about 110° C, said acid being provided in sufficient amount to give a final pH for leaching said iron oxide ore of less than about 2 and said reducing agent being selected from the group H_2S, FeS, ammonium sulfide, alkali metal sulfides and alkaline earth metal sulfides, to form a product comprising a first leach solution containing divalent iron and said nonferrous metal values;
b. adjusting the pH of the first leach solution to at least about 3;
c. selectively leaching the sea nodules in the pH-adjusted first leach solution at a temperature in the range of about 25° C to about 110° C to reduce tetravalent manganese to the divalent state and to selectively extract nonferrous metal values from the manganiferous ore into solution while precipitating iron as hydrated ferric oxide, thereby forming a second leach solution containing nonferrous metal values derived from the iron oxide ore and the sea nodules ore; and
d. separating the second leach solution from the remaining residue.

4,065,543

CATALYTIC OXIDATION OF C_2–C_4 HALOGENATED HYDROCARBONS

Edward J. Sare, Clinton, and Jerome M. Lavanish, Akron, both of Ohio, assignors to PPG Industries, Inc., Pittsburgh, Pa.

Continuation-in-part of Ser. No. 647,687, Jan. 9, 1976, abandoned. This application Nov. 15, 1976, Ser. No. 742,045

Int. Cl.^{2} B01D *53/34*

U.S. Cl. 423—240 **22 Claims**

1. A method for treating a C_2–C_4 halogenated hydrocarbon

containing gas stream, said halogenated hydrocarbon being selected from the group consisting of chlorinated and brominated hydrocarbons, which comprises contacting the halogenated hydrocarbons with an oxidizing amount of oxygen-containing gas in the presence of hydrated cobalt oxide catalyst at temperatures within the range of from 20° to 500° C., for a time sufficient to reduce the halogenated hydrocarbon content of the gas stream, said temperature being such as to inhibit water-induced loss of catalyst activity.

4,065,544

FINELY DIVIDED METAL OXIDES AND SINTERED OBJECTS THEREFROM

Bernard H. Hamling, Warwick, and Alfred W. Naumann, Monsey, both of N.Y., assignors to Union Carbide Corporation, New York, N.Y.

Continuation-in-part of Ser. No. 264,040, June 19, 1972, abandoned, which is a continuation-in-part of Ser. No. 36,442, May 11, 1970, abandoned. This application June 20, 1974, Ser. No. 481,321

Int. Cl.² C01F *15/00;* **C01I** *17/00;* **C01F** *7/02;* **C01G** *1/02*

U.S. Cl. 423—252 **36 Claims**

1. Process for producing finely divided metal oxygen-containing compounds which comprises:

a. contacting a carbohydrate material with at least one compound of a metal to form an intimate mixture thereof;
b. introducing said mixture into a heating zone having a temperature sufficient to ignite said mixture but insufficient to substantially sinter said metal compound;
c. igniting said mixture in said heating zone for a time period sufficient to decompose and remove said carbohydrate material and produce easily disrupted agglomerates of submicron size metal oxygen-containing particles;
d. disrupting said agglomerates without substantially reducing the size of the individual particles which comprised said agglomerates to produce finely divided metal oxygen-containing compounds having a mean particle size below one micron.

4,065,545

STABILIZED HYPOCHLOROUS ACID AND HYPOCHLORITE SOLUTIONS

Philip Hugh Gamlen, Runcorn, England, assignor to Imperial Chemical Industries Limited, London, England

Filed Jan. 4, 1977, Ser. No. 756,734

Claims priority, application United Kingdom, Jan. 29, 1976, 3545/76

Int. Cl.² C01B *11/04, 11/06*

U.S. Cl. 423—265 **8 Claims**

1. In an aqueous solution containing a hypochlorite selected from the group consisting of alkali metal hypochlorite, alkaline earth metal hypochlorite, and hypochlorous acid, and, as impurity, a metal compound selected from the group consisting of nickel, iron and copper compounds or mixtures of such compounds, the improvement wherein the solution also contains a stabilizing amount of periodate ions.

4,065,546

PROCESS FOR PREPARING HALOPHOSPHAZENE MIXTURES

James T. F. Kao, Baton Rouge, La., assignor to Ethyl Corporation, Richmond, Va.

Continuation-in-part of Ser. No. 422,004, Dec. 5, 1973, abandoned. This application Dec. 8, 1975, Ser. No. 638,375

Int. Cl.² C01B *25/10*

U.S. Cl. 423—300 **7 Claims**

1. A process for producing high cyclic chlorophosphazene oligomers having the recurring unit $—NPCl_2)_n$ wherein n ranges from 3 to about 7, said process comprising establishing in an inert solvent a dispersion of finely divided ammonium chloride in an amount sufficient to initiate formation of chlorophosphazene by reacting hydrogen chloride with from about 10 to about 65 weight percent of the total ammonia used in the process, heating said dispersion to the reflux temperature of the solvent, adding simultaneously to said dispersion phosphorus pentachloride as a solution of from about 40 to about 70 weight percent of phosphorus pentachloride in an additional amount of said solvent at a rate such that no free concentration of phosphorus pentachloride is allowed to exist in the reaction mass and ammonia such that the total amount of ammonia employed for both the formation of ammonium chloride and the chlorophosphazene is from the theoretical amount required to react with phosphorus pentachloride to about 30 percent by weight in excess of the theoretical amount, maintaining the reflux temperature for from about ½ to about 2 hours after completing the addition and recovering the cyclic chlorophosphazene oligomers.

4,065,547

METHOD OF DEFLUORINATING PHOSPHORIC ACID

Maurice Leroy, Saint-Germain-en-Laye, and Jacques Helgorsky, Frepillon, both of France, assignors to Rhone-Poulenc Industries, Paris, France

Filed Aug. 11, 1975, Ser. No. 603,732

Claims priority, application France, Aug. 13, 1974, 74.28029

Int. Cl.² C01B *25/16*

U.S. Cl. 423—321 S **13 Claims**

1. A method of defluorinating phosphoric acid comprising contacting the fluorine containing phosphoric acid in solution in a substantially water immiscible organic solvent with an aqueous medium containing in solution 0.2 to 5% by weight of a soluble compound of a metal selected from the group consisting of Al, Fe, Ti and Zr whereby phosphoric acid remains in the organic solvent while fluorine compounds are extracted from the organic solvent into the aqueous medium, separating the aqueous medium containing the fluorine compound from the organic solution containing the phosphoric acid, regenerating the separated organic solution by contact with an aqueous phase whereby phosphoric acid is extracted from the organic solution into the aqueous phase, and then separating the aqueous phase comprising phosphoric acid in which the fluorine content is less than 10 p.p.m. relative to the P_2O_5.

4,065,548

PREPARATION OF ALKALI-METAL AZIDES

Donald E. Tunison, Jr., Corpus Christi, Tex., assignor to PPG Industries, Inc., Pittsburgh, Pa.

Filed Nov. 24, 1976, Ser. No. 744,562

Int. Cl.² C01B *21/08*

U.S. Cl. 423—410 **4 Claims**

1. In a process for the preparation and purification of alkali-metal azide by contacting with water a dilute two component slurry having a solid insoluble component of alkali-metal azide-/alkali-metal hydroxide double salt and a single phase liquid component consisting essentially of substantially anhydrous liquid ammonia to effect solution of at least a portion of said azide double salt and thereafter separating alkali-metal azide from the resultant solution; the improvement which comprises:

settling from said dilute slurry a layer of said double salt having a double salt concentration greater than said dilute slurry, separating said settled layer from supernatant slurry components excluded from the settled layer, then dissolving said layer in water to form a solution and thereafter recovering purified alkali-metal azide from said solution by crystallization.

4,065,549

HIGH TENSILE STRENGTH, HIGH YOUNG'S MODULUS CARBON FIBER HAVING EXCELLENT INTERNAL STRUCTURE HOMOGENEITY, AND PROCESS FOR PRODUCING THE SAME

Yoshiro Kinoshita, Masaki, Japan, assignor to Toray Industries, Inc., Tokyo, Japan

Division of Ser. No. 622,954, Oct. 16, 1975, abandoned. This application Aug. 12, 1976, Ser. No. 713,629

Claims priority, application Japan, Oct. 21, 1974, 49-120365; Dec. 2, 1974, 49-138217

Int. Cl.² D01F *9/14, 9/22*

U.S. Cl. 423—447.4 **16 Claims**

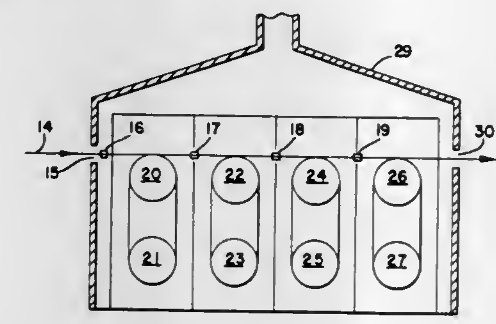

1. A process for producing a carbon fiber having high tensile strength which comprises oxidizing an organic polymeric fiber in an oxidizing atmosphere by intermittently contacting and removing said organic fiber on and from a heated body having a surface temperature from about 200° to about 400° C. wherein the contact time of said organic fiber on the heated body per single contact is less than about 1 second and the temperature of said oxidizing atmosphere is maintained lower thn the surface temperature of said heated body, and then carbonizing the oxidized fiber in a non-oxidizing atmosphere at a temperature above about 800° C.

4,065,550

PROCESS FOR PREPARING LITHIUM HEXAFLUOROARSENATE OF HIGH PURITY

Walter B. Ebner, Hartsville, and Charles Richard Walk, Collegeville, both of Pa., assignors to The United States of America as represented by the Secretary of the Army, Washington, D.C.

Filed Jan. 31, 1977, Ser. No. 764,490

Int. Cl.² C01B *27/02;* **C01D** *15/00;* **C01B** *11/18*

U.S. Cl. 423—464 **4 Claims**

1. A process for producing lithium hexafluoroarsenate which comprises reacting approximately equimolecular proportions of lithium perchlorate and potassium hexafluoroarsenate in an inert organic solvent consisting essentially of a carboxylic acid ester of the formula $RCOOR_1$, wherein R is hydrogen or an alkyl radical of 1 to 4 carbon atoms and R_1 is an alkyl radical of 1 to 4 carbon atoms at a temperature up to about 70° C. in an inert atmosphere essentially free from water vapor, and recovering the lithium hexafluoroarsenate produced.

4,065,551

METHOD OF RECOVERING FLUORINE FROM CARBONACEOUS WASTE MATERIAL

Erik Qvale Dahl, Kristiansand S., Norway, assignor to Elkem-Spigerverket A/S, Oslo, Norway

Continuation-in-part of Ser. No. 483,000, June 25, 1974, abandoned, which is a continuation of Ser. No. 112,585, Feb. 4, 1971, abandoned, which is a continuation-in-part of Ser. No. 795,472, Jan. 31, 1969, abandoned. This application Mar. 1, 1976, Ser. No. 662,719

Claims priority, application Norway, Feb. 1, 1968, 68406

Int. Cl.² C01B *7/22*

U.S. Cl. 423—483 **7 Claims**

1. A continuous method of recovering fluorine as hydrogen fluoride from particles of fluorine-containing solid carbonaceous material by pyrohydrolysis which comprises:

a. a stream of gas comprising from 45to 50% steam;
b. continuously feeding solid carbonaceous material of less than about 10 millimeters in size onto the said stream of gas;
c. forming a fluidized bed by having said carbonaceous material suspended in said stream of gas;

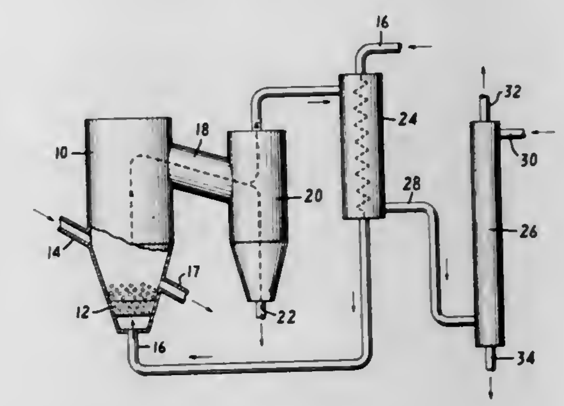

d. maintaining a temperature of at least above 1100° C. in said fluidized bed for a sufficient time whereby said carbonaceous material is pyrohydrolyzed and evolves gaseous hydrogen fluoride; and
e. collecting said evolved hydrogen fluoride whereby the recovery of fluorine from said carbonaceous material by said method is from 88 to 98% of the fluorine contained in said carbonaceous material and whereby the efficiency of said method expressed as a ratio of kilograms of steam used per kilogram of fluorine recovered is from 13 to 15 .

4,065,552

METHOD OF DETECTING MALIGNANT NEOPLASMS

Giovanni Giacomo Costa, 100 Riley St., East Aurora, N.Y. 14502

Filed May 5, 1975, Ser. No. 574,754

Int. Cl.² A61K *29/00, 43/00*

U.S. Cl. 424—1 **18 Claims**

1. A diagnostic test method for detecting malignant neoplasms employing as a tracer a radioactively labelled lipid selected from the group consisting of fatty acids, fat precursors, simple fats, phospholipids, steroids and sterols, the label being a stable or unstable isotope selected from the group consisting of carbon, hydrogen, oxygen and phosphorus wherein the metabolism of said lipid by subjects having malignant neoplasms is different than in subjects not having such neoplasms comprising:

a. administering to a subject under controlled conditions a predetermined amount of a radioactively labelled lipid tracer, capable of being metabolized by the subject;
b. waiting a sufficient time to allow for the metabolism of the labelled lipid tracer; and
c. determining by radioactive measurements the amount of radioactive catabolites in the excretion products.

4,065,553

X-RAY CONTRAST MEDIA

Guy Tilly; Michel Jean Charles Hardouin, and Jean Lautrou, all of Aulnay-sous-Bois, France, assignors to Laboratoires Andre Guerbet, Aulnay-sous-Bois, France

Division of Ser. No. 579,279, May 20, 1975, Pat. No. 4,014,986. This application Dec. 3, 1976, Ser. No. 747,621

Claims priority, application United Kingdom, May 31, 1974, 24169/74; July 31, 1974, 33900/74

Int. Cl.² A61K *29/02;* **C07C** *103/84*

U.S. Cl. 424—5 **4 Claims**

1. An iodobenzene derivative selected from the group consisting of a compound of formula

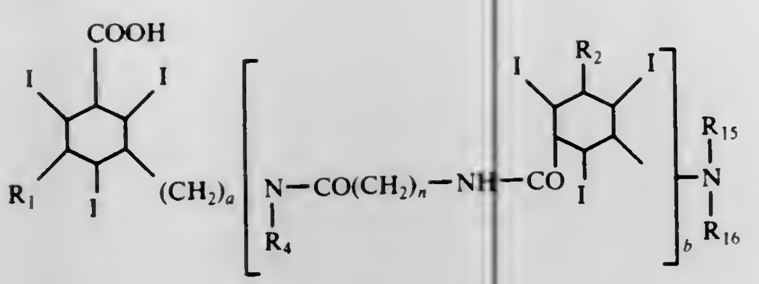

in which:

R_1 is selected from the group consisting of hydrogen and a radical having the formula

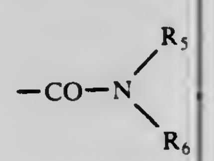

R_5 and R_6 being each selected from the group consisting of hydrogen, lower alkyl, lower hydroxyalkyl and lower alkanoyl-oxyalkyl, is selected from the group consisting of hydrogen and a radical having the formula

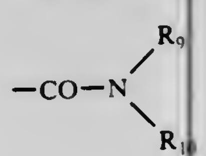

in which R_9 and R_{10} have the meanings given for R_5 and R_6, at least one of the radicals R_1 and R_2 being hydrogen,

R_4 is selected from the group consisting of hydrogen, lower alkyl and lower hydroxyalkyl,

R_{15} is selected from the group consisting of hydrogen, lower alkanoyl and polyhydroxy lower alkanoyl,

R_{16} is selected from the group consisting of hydrogen, lower alkyl, lower hydroxyalkyl and lower alkanoyl,

a is 0 or 1

n is an integer from 1 to 5

b is 1 or 2

and the different R_2, R_4 and n which exist when $b = 2$ may have the same or different meanings, a lower alkyl ester thereof and a salt with a pharmaceutically acceptable base.

2. An X-ray contrast medium comprising an aqueous solution of an effective amount of a compound as claimed in claim 1.

4,065,554
X-RAY CONTRAST MEDIA
Guy Tilly; Michel Jean Charles Hardouin, and Jean Lautrou, all of Aulnay-sous-Bois, France, assignors to Laboratoires Andre Guerbet, Aulnay-sous-Bois, France
Division of Ser. No. 579,279, May 20, 1975, Pat. No. 4,014,986. This application Dec. 6, 1976, Ser. No. 747,810
Claims priority, application United Kingdom, May 31, 1974, 24169/74; July 31, 1974, 33900/74
Int. Cl.[2] A61K *29/02;* **C07C** *103/84*
U.S. Cl. 424—5 **4 Claims**

1. An iodobenzene derivative selected from the group consisting of a compound of formula

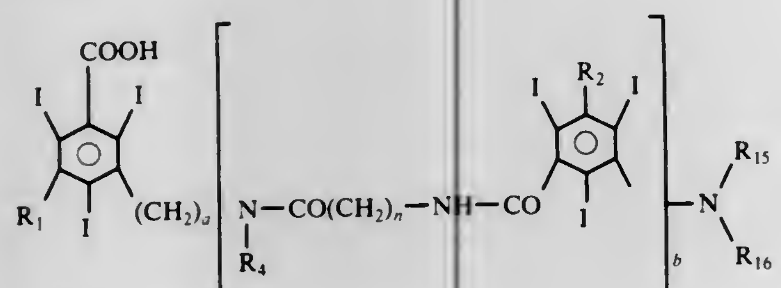

in which:

R_1 is selected from the group consisting of a radical having the formula

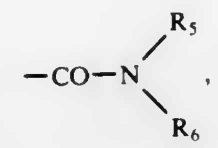

R_5 and R_6 being each selected from the group consisting of hydrogen, lower alkyl, lower hydroxyalkyl and lower alkanoyloxyalkyl and a radical of the formula

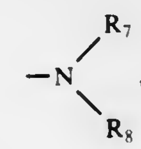

R_7 being lower alkanoyl and R_8 being selected from the group consisting of hydrogen, lower alkyl and lower hydroxyalkyl,

R_2 is selected from the group consisting of a radical having the formula

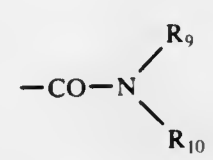

in which R_9 and R_{10} have the meanings given for R_5 and R_6, and a radical of the formula

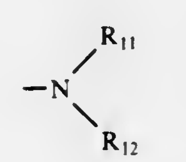

in which R_{11} has the meaning given for R_7 or represents hydrogen and R_{12} has the meaning given for R_8,

at least one of the radicals R_1 and R_2 being of

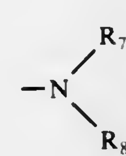 type,

R_4 is selected from the group consisting of hydrogen, lower alkyl and lower hydroxyalkyl,

R_{15} is selected from the group consisting of hydrogen, lower alkanoyl and polyhydroxy lower alkanoyl.

R_{16} is selected from the group consisting of hydrogen, lower alkyl, lower hydroxyalkyl and lower alkanoyl,

a is 0 or 1

n is an integer from 1 to 5

b is 1 or 2

and the different R_2, R_4 and n which exist when $b = 2$ may have the same or different meanings,

a lower alkyl ester thereof and a salt with a pharmaceutically acceptable base.

2. An X-ray contrast medium comprising an aqueous solution of an effective amount of a compound as claimed in claim 1.

4,065,555
INSECTICIDAL COMPOSITIONS EMPLOYING CERTAIN BLOCK COPOLYMERS
Richard C. Potter, Modesto, Calif., assignor to Shell Oil Company, Houston, Tex.
Continuation-in-part of Ser. No. 94,586, Dec. 2, 1970, abandoned. This application May 15, 1972, Ser. No. 253,583
Int. Cl.[2] A01n *9/36*
U.S. Cl. 424—83 **10 Claims**

1. An insecticidal composition comprising

a. 5–50% by weight of a volatile insecticidal compound of the formula

$$(R-O)_2-\overset{X}{\overset{\|}{P}}-O-\overset{H}{\overset{|}{C}}=\overset{R'}{\overset{|}{C}}-R''$$

wherein R is alkyl of 1 or 2 carbon atoms, X is O or S, R′ is hydrogen or halogen and R″ is halogen;

b. 20–75% by weight of a polyvinyl chloride resin;

c. 0–40% by weight of an insecticidally inert polyvinyl chloride resin plasticizer; and

d. 1–30% by weight of a block copolymer of the formula

$$A\text{-}B—A)_m,\ A\text{-}B—B\text{-}A)_n \text{ or } A—B\text{-}A)_n$$

wherein A is a polymer block of styrene or alpha-methyl styrene having a molecular weight of about 5,000 to 100,000, B is a polymer block of butadiene or isoprene having a molecular weight of about 15,000 to 500,000, m is 0 or 1 and n is an integer from 2 to 5 or the hydrogenated derivatives thereof.

4,065,556
TUBERCIDIN PREPARATION
Charles G. Smith, Kalamazoo, Mich., assignor to The Upjohn Company, Kalamazoo, Mich.
Continuation of Ser. No. 557,759, March 12, 1975, abandoned, which is a continuation of Ser. No. 435,272, Jan. 21, 1974, abandoned, which is a continuation of Ser. No. 278,836, Aug. 8, 1972, abandoned, which is a continuation of Ser. No. 113,656, Feb. 8, 1971, abandoned, which is a continuation of Ser. No. 810,925, March 24, 1969, abandoned, which is a continuation of Ser. No. 529,664, Aug. 9, 1967, abandoned. This application May 24, 1976, Ser. No. 689,474
Int. Cl.[2] A61K *31/71, 31/70, 35/14*
U.S. Cl. 424—181 **2 Claims**

1. Tubercidin-containing human red blood cells prepared by:

1. mixing whole blood and a physiological saline solution of tubercidin, the amount of tubercidin providing a concentration of 50 to 200 mcg. per milliliter of the blood;
2. incubating the mixture of blood and tubercidin for from 30 to 60 minutes at from room temperature to 37° C.; and
3. centrifuging the incubated mixture to recover the tubercidin-containing red blood cells.

4,065,557
AMINO SUGARS AND THEIR USE IN IMPROVING THE MEAT:FAT RATIO IN ANIMALS
Werner Frommer, Wuppertal; Horst Gericke, Leichlingen; Uwe Keup, Wuppertal; Walter Puls, Wuppertal; Delf Schmidt, Wuppertal, and Otto Wagner, Wuppertal, all of Germany, assignors to Bayer Aktiengesellschaft, Germany
Continuation-in-part of Ser. No. 557,264, March 11, 1975, abandoned. This application July 13, 1976, Ser. No. 704,842
Claims priority, application Germany, Mar. 21, 1974, 2413720
Int. Cl.[2] A61K *31/71, 31/715;* **C12D** *13/04*
U.S. Cl. 424—181 **38 Claims**

25. The method of influencing the utilization of feed in an animal by reducing formation of fat and thereby increasing the meat:fat ratio in the animal in favor of a higher proportion of meat which comprises orally administering to said animal an effective amount of at least one amino-sugar as herein defined, said amino-sugar having the conformational formula:

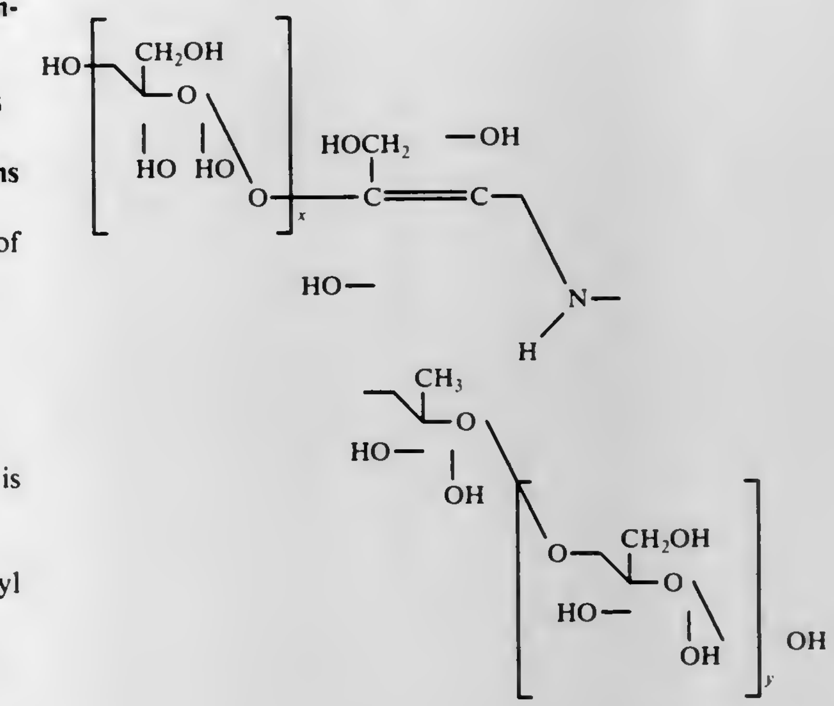

wherein

y has a value of 1 to 8 and

x has a value of from 0 to 7,

the sum of $y + x$ being from 1 to 8.

4,065,558
SOIL TREATMENT INSECTICIDE
Fred Morris Gordon, Princeton, N.J., assignor to American Cyanamid Company, Stamford, Conn.
Continuation of Ser. No. 307,712, Nov. 17, 1972, abandoned, which is a continuation of Ser. No. 204,678, Dec. 3, 1971, abandoned. This application Oct. 20, 1975, Ser. No. 624,159
Int. Cl.[2] A01N *9/36*
U.S. Cl. 424—216 **2 Claims**

1. A method for protecting a corn crop characterized by providing it with residual pesticidal protection throughout the growing season against attack in the soil by corn rootworms by applying an insecticidally effective amount of the compound O,O-diethyl-S-(tert-butylthio)methyl phosphorodithioate to the soil in which said corn crop is grown.

4,065,559
DINITROANILINES FOR CONTROL OF SOIL-BORNE PHYTOPATHOGENS
James D. Froyd, Fountaintown, Ind., assignor to Eli Lilly and Company, Indianapolis, Ind.
Filed Mar. 19, 1976, Ser. No. 668,359
Int. Cl.[2] A01N *9/16*
U.S. Cl. 424—229 **8 Claims**

1. A method of reducing the adverse effects of soil-borne phytophthora phytopathogens which comprises applying to soil infested with such phytopathogens a fungicidally-effective amount of a compound of the formula

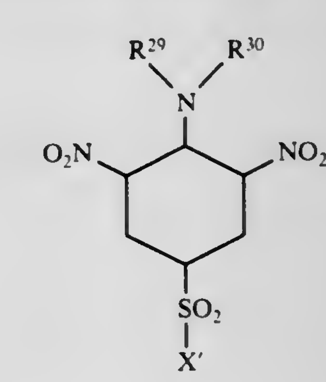

wherein

X' is $N(R^{31})_2$, $N(R^{33})CH_2Het'$, $N{=}CHN(CH_3)_2$, $N{=}C(R^{34})OR^{35}$, or $N{=}CHOR^{36}$;
R^{29} is H, C_3–C_4 alkenyl or C_1–C_4 alkyl;
when R^{29} is H, R^{30} is C_3–C_7 secondary alkyl;
when R^{29} is not H, R^{30} is C_1–C_5 alkyl, cyclopropylmethyl, C_5–C_6 cycloalkyl, C_3–C_4 alkenyl, halo C_2–C_3 alkyl or halo C_3–C_4 alkenyl;
one of R^{31} is H or CH_3 and the other is H, $SCCl_3$, CH_3, phenylthio, OH, C_1–C_4 alkoxy or NH_2;
Het' is 2,5-dimethylpyrrolidino, piperidino, morpholino, C_1–C_2 alkylpiperidino, hexahydroazepino, 2,2-dimethylaziridino, or C_1–C_2 alkylpiperazino;
R^{33} is H or methyl;
R^{34} is C_1–C_2 alkyl or phenyl;
R^{35} is C_1–C_4 alkyl; and
R^{36} is C_1–C_2 alkyl.

4,065,560
TETRAHYDRO-2-(NITROMETHYLENE)-2H-1,3-THIAZINE INSECT CONTROL AGENTS

James E. Powell, Rodmersham Green near Sittingbourne, England, assignor to Shell Oil Company, Houston, Tex.
Continuation-in-part of Ser. No. 554,361, March 3, 1975, abandoned, which is a continuation-in-part of Ser. No. 468,124, May 8, 1974, abandoned. This application Mar. 29, 1976, Ser. No. 671,228
Int. Cl.² A01N *9/12*
U.S. Cl. 424—246 **4 Claims**

1. A method for killing insects which comprises subjecting them to the action of an insecticidally effective amount of a compound selected from the group consisting of:
1. a resonance hybrid in which the two significant forms which contribute thereto are represented by the formulae

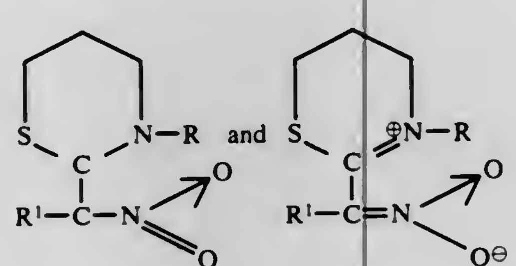

and including when R is hydrogen, the tautomeric form represented by the formula

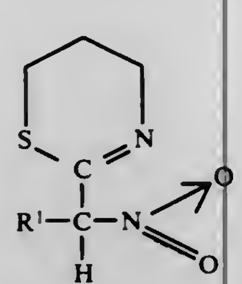

wherein R is hydrogen or contains up to eight carbon atoms and is one of: alkyl, alkeny;, alkoxyalkyl, cycloalkylalkyl, cyanoalkyl, haloalkenyl, phenalkyl or alkoxycarbonylvinyl;
R^1 is hydrogen or contains up to eight carbon atoms and is one of
a. alkyl, alkenyl, alkynyl, haloalkyl, haloalkenyl, halo (hydroxy)alkyl, alkoxyalkyl, cyanoalkyl, hydroxyalkyl, alkoxycarbonylalkyl, alkylcarbonylalkyl,alkylthioalkyl, alkylsulfinylalkyl, phenalkyl or phenylthio optionally substialkyl, phenyl, alkoxy or phenoxy;
b. halogen;
c. aminomethyl, $—CH_2—NR^2R^3$, wherein R^2 is alkyl, hydroxyalkyl, alkoxyalkyl, cycloalkyl, alkenyl, phenyl or phenalkyl, and R^3 is hydrogen or one of the moieties represented by R^2;
d. $(CH_{2n}—R^4$, wherein *n* is zero, one or two, and R^4 is a heteromonocyclic moiety of from five to six atoms in the ring, containing in the ring carbon atoms and one to two of oxygen (—O—), sulfur (—S—) or nitrogen (=N— or —NH—) bonded to carbon in the ring; and

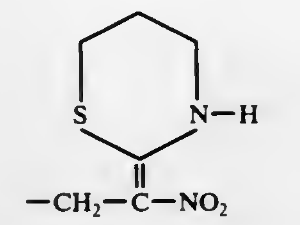
(e)

2. the alkali metal, alkyl halide, ammonium or amine salt of such a compound which R is hydrogen.

4,065,561
METHOD OF INDUCING SKELETAL MUSCLE RELAXATION

Myron Michael Gassel, 34555 Scenic Drive, Dana Point, Calif. 92629
Filed June 30, 1975, Ser. No. 592,124
Int. Cl.² A61K *31/44*
U.S. Cl. 424—263 **6 Claims**

1. A method for inducing skeletal muscle relaxation in a mammal suffering from a pathological state characterized by hyperactivity of the spinal reflex arc, which comprises the administration to said mammal of a pharmaceutically effective non-toxic amount of 1-methyl-2-(3-pyridyl) pyrrole.

4,065,562
METHOD AND COMPOSITION FOR REDUCING BLOOD GLUCOSE LEVELS

Katsuya Ohata, Uji; Hiroshi Enomoto, Kyoto; Yoshiaki Yoshikuni, Kyoto; Tatsuhiko Kono, Kyoto, and Masahiro Yagi, Otsu, all of Japan, assignors to Nippon Shinyaku Co., Ltd., Japan
Filed Dec. 20, 1976, Ser. No. 752,006
Claims priority, application Japan, Dec. 29, 1975, 50-157425; Jan. 1, 1976, 51-239
Int. Cl.² A61K *31/445*
U.S. Cl. 424—267 **4 Claims**

1. The method of reducing blood glucose levels and inhibiting lipid biosynthesis in humans and other animals which comprises orally, rectally or parentally administering thereto an effective amount of 2-hydroxymethyl-3,4,5-trihydroxypiperidine.

4,065,563
3-HETERO-5-ISOTHIOCYANOPHENYL OXADIAZOLES AS ANTIFUNGAL AND ANTIBACTERIAL AGENTS

Venkatachala L. Narayanan, Hightstown, N.J.; Hans H. Gadebusch, Yardley, Pa., and Rudiger D. Haugwitz, Titusville, N.J., assignors to E. R. Squibb & Sons, Inc., Princeton, N.J.
Division of Ser. No. 555,511, March 5, 1975, Pat. No. 4,022,901. This application Jan. 21, 1977, Ser. No. 761,091
Int. Cl.² A61K *31/38, 31/42*
U.S. Cl. 424—272 **9 Claims**

1. A method for treating fungal infections and/or bacterial infections, which comprises administering to a mammalian host an effective amount of a compound of the formula

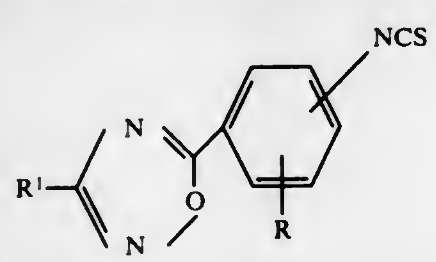

wherein R is selected from the group consisting of hydrogen, lower alkyl, halogen, trifluoromethyl, lower alkoxy, phenoxy, di(lower alkyl)amino,

$$\text{lower alkyl}\ —\overset{\overset{\displaystyle O}{\|}}{C}—\overset{H}{N}—,$$

phenyl, or phenyl substituted with halogen, nitro, trifluoromethyl, lower alkyl or lower alkoxy, R^1 is a heterocyclic group selected from the group consisting of thienyl, furyl, pyrryl, imidazolyl, oxazolyl, and any of the above groups substituted by lower alkyl substituent, a lower alkoxy substituent or a halo substituent.

4,065,564
ANTIPERSPIRANT SOLUTION CONTAINING A SUBSTANTIALLY NON-VOLATILE SILOXANE LIQUID

John J. Miles, Jr., Lake Intervale, and William Netzbandt, Dumont, both of N.J., assignors to Lever Brothers Company, New York, N.Y.
Filed Aug. 15, 1975, Ser. No. 605,378
Int. Cl.² A61K *7/34, 7/38*
U.S. Cl. 424—66 **14 Claims**

1. An antiperspirant solution suitable for pump spray or roll-on application consisting essentially of an alcohol soluble aluminum chlorhydroxide complex; a sufficient amount of a polyorgano-siloxane selected from the group consisting of polyphenylmethyl siloxane, poly-higher alkyl siloxane and mixtures thereof to substantially reduce the tackiness of said complex during drying; and a sufficient amount of alcohol to result in said solution; said composition being characterized by having substantially reduced tackiness when applied from a pump spray or a roll-on applicator and a substantially reduced tendency to malfunction when applied from said pump spray or roll-on applicator.

4,065,565
ACYLHYDRAZONES AND ANTI-PSYCHOTIC COMPOSITIONS THEREOF

Kikuo Sasajima, Toyonaka; Keiichi Ono, Nishinomiya; Masaru Nakao, Toyonaka; Isamu Maruyama, Minoo; Shigenari Katayama; Shigeho Inaba, both of Takarazuka, and Hisao Yamamoto, Kobe, all of Japan, assignors to Sumitomo Chemical Company, Limited, Osaka, Japan
Filed Aug. 12, 1975, Ser. No. 603,813
Claims priority, application Japan, Aug. 13, 1974, 49-92985
Int. Cl.² C07D *241/04*
U.S. Cl. 424—250 **9 Claims**

1. A compound of the formula:

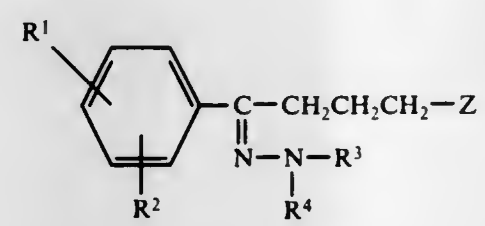

wherein
R^1 is halogen, R^2 is hydrogen, halogen or benzoylamino of which the benzoyl is optionally substituted with one or two substituents selected from the group consisting of halogen, lower alkyl, lower alkoxy, lower alkanoyl, cyclopropylcarbonyl, cyclohexylcarbonyl, lower alkenoyl, phenyl(lower)alkanoyl, halo(lower)alkanoyl, amino(lower)alkanoyl, phenoxy(lower)-alkanoyl, lower alkylamino(lower)alkanoyl, lower alkoxy(lower)alkanoyl, or phenyl(lower)alkenoyl, R^3 is hydrogen or lower alkyl, R^4 is benzoyl, lower alkanoyl, phenyl(lower)alkanoyl, cyclopropylcarbonyl, cyclohexylcarbonyl or phenoxy(-lower)alkanoyl and Z is a group having the formula:

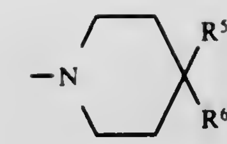
(I)

wherein R^5 is hydrogen, hydroxyl or benzoyloxy optionally substituted with one or two substituents selected from the group consisting of halogen, lower alkyl, lower alkoxy, lower alkanoyl, cyclopropylcarbonyl, cyclohexylcarbonyl, lower alkenoyl, phenyl(lower)alkanoyl, halo(lower)alkanoyl, amino(lower)alkanoyl, phenoxy(lower)alkanoyl, lower alkylamino(lower)alkanoyl, lower alkoxy(lower)alkanoyl, or phenyl(lower)alkenoyl, and R^6 is hydrogen, phenyl or benzyl, said phenyl or benzyl being optionally substituted with one or two substituents selected from the group consisting of halogen, lower alkyl, lower alkoxy and trifluoromethyl on the benzene ring;

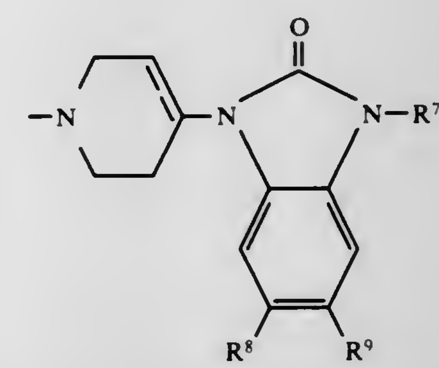
(II)

wherein the dotted line indicates the optional presence of an additional single bond linkage, R^7 is hydrogen or lower alkyl and R^8 and R^9 are each hydrogen, halogen or lower alkyl;

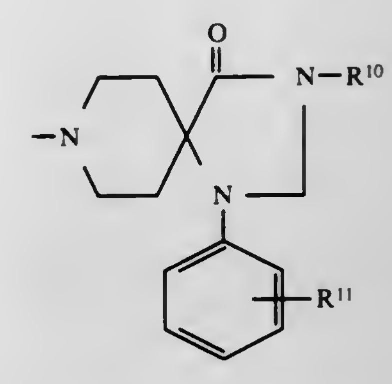
(III)

wherein R^{10} is hydrogen or lower alkyl and R^{11} is hydrogen, halogen, lower alkyl or lower alkoxy; or

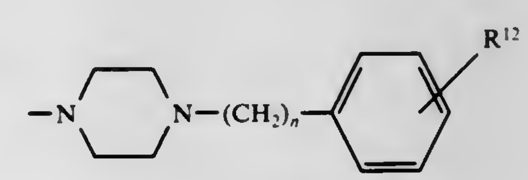
(IV)

wherein R^{12} is hydrogen, halogen, lower alkyl, lower alkoxy or trifluoromethyl and n is an integer of from 0 to 2, or a pharmaceutically acceptable salt thereof.

4,065,566

N-NICOTINOYL-3,4-DINICOTINOYLOXY-L-PHENYLALANINE AND DERIVATIVES PHARMACEUTICAL COMPOSITIONS AND METHODS CONTAINING SAME

Nicolae S. Bodor; Kenneth B. Sloan, both of Lawrence, and Anwar A. Hussain, Lexington, all of Kans., assignors to INTERx Research Corporation, Lawrence, Kans.

Division of Ser. No. 569,009, April 17, 1975, Pat. No. 3,998,779, which is a continuation-in-part of Ser. No. 412,419, Nov. 2, 1973, Pat. No. 3,891,696. This application Sept. 7, 1976, Ser. No. 720,781

Int. Cl.^{2} C07D *213/56;* A61K *31/44*

U.S. Cl. 424—266 **6 Claims**

1. A pro-drug compound of L-DOPA having the formula:

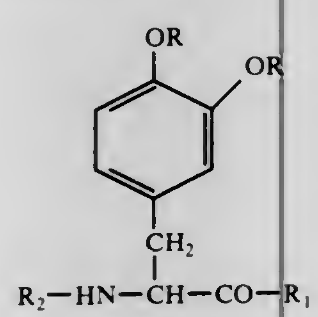

wherein R represents a

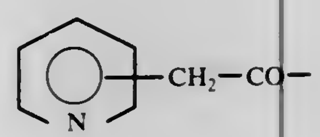

group or a —CO-pyridyl group; wherein R_1 represents a member selected from the group consisting of a hydroxyl group and a —OM group, wherein M is an alkali metal or an ammonium ion; and wherein R_2 represents a

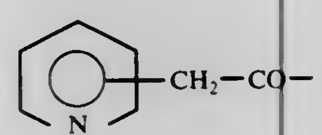

group or a —CO-pyridyl group.

2. A method for treating Parkinsonism in warm-blooded animals which comprises orally administering thereto, an anti-Parkinsonism effective amount of a compound having the formula:

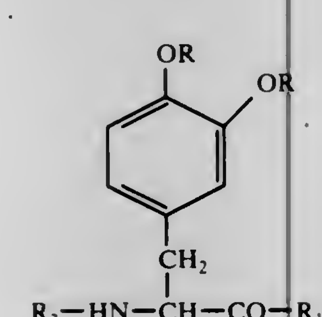

wherein R represents a

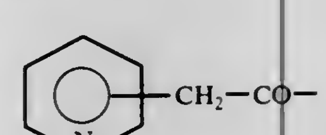

group or a —CO-pyridyl group; wherein R_1 represents a member selected from the group consisting of a hydroxyl group and a —OM group, wherein M is an alkali metal or an ammonium ion; and wherein R_2 represents a

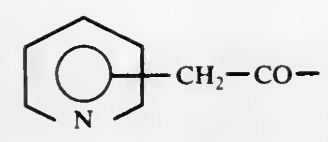

group or a —CO-pyridyl group.

4,065,567

SUBSTITUTED NITROIMIDAZOLYL THIADIAZOLES AND OXADIAZOLES AS ANTIBACTERIAL AGENTS AND GROWTH PROMOTING COMPOUNDS

Gerald Berkelhammer, Princeton, and Goro Asato, Titusville, both of N.J., assignors to American Cyanamid Company, Stamford, Conn.

Division of Ser. No. 562,523, March 27, 1975, Pat. No. 3,991,200, which is a division of Ser. No. 463,951, April 25, 1974, Pat. No. 3,904,756, which is a division of Ser. No. 199,005, Nov. 15, 1971, Pat. No. 3,830,924, which is a continuation-in-part of Ser. No. 17,977, March 9, 1970, abandoned, which is a continuation-in-part of Ser. No. 814,205, April 7, 1969, abandoned, which is a continuation-in-part of Ser. No. 659,596, Aug. 10, 1967, Pat. No. 3,452,035, which is a continuation-in-part of Ser. No. 604,158, Dec. 23, 1966, abandoned. This application July 16, 1976, Ser. No. 706,101

Int. Cl.^{2} A61K *31/42*

U.S. Cl. 424—272 **11 Claims**

1. A method of controlling the growth of bacteria in warm-blooded animals which comprises orally administering to said animals an antibacterially effective amount of a nitroimidazole of the formula:

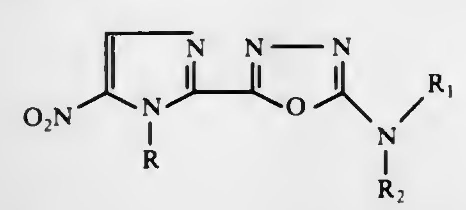

wherein R is selected from the group consisting of lower alkyl, hydroxy lower alkyl, lower alkanoyloxy lower alkyl and benzyl; and R_1 and R_2 are selected from the group consisting of hydrogen, alkyl of 1 to 8 carbon atoms, hydroxy lower alkyl, lower alkoxy lower alkyl, cyclohexyl, formyl, lower alkanoyl, monochlorolower alkanlyl, dichloro lower alkanoyl, lower alkyl aminolower alkyl;

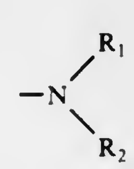

taken together is —N=CHN (lower alkyl)$_2$; and physiologically acceptable salts thereof.

4,065,568

3-CARBO(LOWER ALKOXY)HYDRAZINOINDAZOLES

Karl Heinrich Mayer, Opladen; Friedrich Hoffmeister, and Wolfgang Wuttke, both of Wuppertal, all of Germany, assignors to Bayer Aktiengesellschaft, Germany

Filed Nov. 24, 1975, Ser. No. 634,913

Claims priority, application Germany, Dec. 13, 1974, 2458966

Int. Cl.^{2} A61K *31/415;* C07D *231/56*

U.S. Cl. 424—273 P **12 Claims**

1. A compound selected from the group consisting of a 3-carbo(lower alkoxy)hydrazinoindazole of the formula:

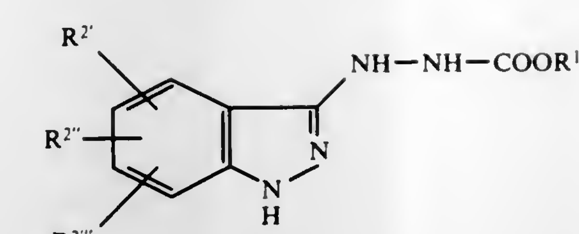

wherein

R^1 is lower alkyl; and each of $R^{2'}$, $R^{2''}$ and $R^{2'''}$ is selected, independently of the others, from the group consisting of hydrogen, lower alkyl of 1 to 6 carbon atoms, lower alkoxy of 1 to 6 carbon atoms, nitro, amino, lower alkylamino of 1 to 6 carbon atoms, di(lower alkyl of 1 to 6 carbon atoms)amino, lower alkanoylamino of 1 to 6 carbon atoms, carbo(lower alkoxy of 1 to 6 carbon atoms)amino, halo, trifluoromethyl, cyano and carbo(lower alkoxy of 1 to 6 carbon atoms),

and the pharmaceutically acceptable nontoxic salts thereof.

11. The method of achieving an analgesic, anti-inflammatory and/or anti-pyretic effect in humans and other warm blooded animals in need thereof which comprises administering thereto an analgesic, anti-inflammatory and/or anti-pyretic effective amount of a compound according to claim 1.

4,065,569

USE OF 2-IMIDAZOLINES AS HYPOGLYCEMIC AGENTS

Heide Roebke, Belleville, N.J., assignor to Schering Corporation, Kenilworth, N.J.

Continuation of Ser. No. 582,313, May 30, 1975, Pat. No. 3,992,403. This application Aug. 25, 1976, Ser. No. 717,800

Int. Cl.^{2} A61K *31/415*

U.S. Cl. 424—273 R **11 Claims**

1. A method for eliciting a hypoglycemic effect in warmblooded animals having a hyperglycemic condition which comprises administering a therapeutically effective quantity of a compound of the structural formula:

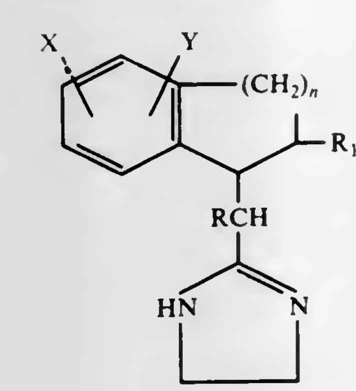

and the pharmaceutically acceptable acid addition salts thereof, wherein each of X and Y are hydrogen or fluoro, each of R and R_1 are lower alkyl or hydrogen, and *n* is an integer 1 to 3.

4,065,570

ANTIVIRAL 5-(SUBSTITUTED BENZAL) HYDANTOINS

Kekhusroo R. Bharucha, Toronto; Djordje Ajdukovic, Montreal; Vytautas Pavilanis, Westmount, and Heinrich Maria Schrenk, Don Mills, all of Canada, assignors to Canada Packers Limited, Toronto and The Institute of Microbiology and Hygiene of The University of Montreal, Ville Laval, both of, Canada

Division of Ser. No. 478,310, June 11, 1974, Pat. No. 4,013,770, which is a continuation-in-part of Ser. No. 262,920, June 16, 1972, abandoned. This application Dec. 12, 1975, Ser. No. 640,167

Int. Cl.^{2} A61K *31/415*

U.S. Cl. 424—273 R **18 Claims**

1. A method of treating a virus infection caused by an entervirus selected from the group consisting of poliomyelitis, coxsackie and echo viruses which comprises administering to a mammal in need of said treatment a non-toxic amount effective to treat said virus of said group of a compound of the formula;

I

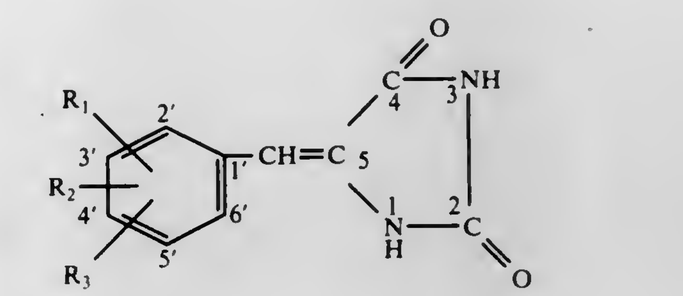

wherein:

formula I includes individual geometrical isomers or mixtures thereof,

R_1 is hydrogen or alkoxy of 1–4 carbon atoms, R_2, and R_3 are each alkoxy of 1 to 4 carbon atoms,

and R_4 and R_5 are each hydrogen or alkanoyl containing from 1 to 20 carbon atoms with the proviso that one of R_4 and R_5 is alkanoyl.

4,065,571

ANTIVIRAL 5-(SUBSTITUTED BENZAL) HYDANTOINS

Kekhusroo R. Bharucha, Toronto; Djordje Ajdukovic, Montreal; Vytautas Pavilanis, Westmount, and Heinrich Maria Schrenk, Don Mills, all of Canada, assignors to Canada Packers Limited, Toronto and The Institute of Microbiology and Hygiene of The University of Montreal, Ville Laval, both of, Canada

Division of Ser. No. 478,310, June 11, 1974, Pat. No. 4,013,770, which is a continuation-in-part of Ser. No. 262,920, June 16, 1972, abandoned. This application Dec. 12, 1975, Ser. No. 640,168

Int. Cl.^{2} A61K *31/411*

U.S. Cl. 424—273 R **15 Claims**

1. A method of treating virus infections in cattle which are caused by foot and mouth virus which comprises administering to such an animal which is in need of said treatment a non-toxic amount effective to treat said virus of said group of a compound of the formula:

I

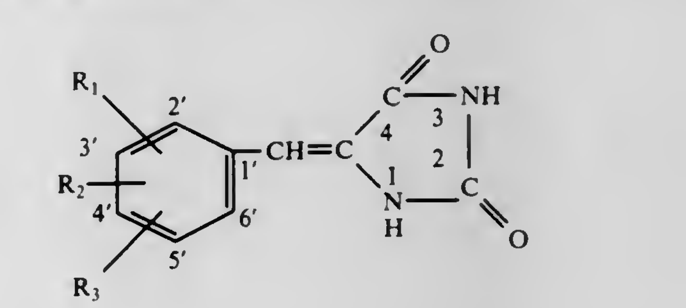

wherein:

formula I includes individual geometrical isomers or mixtures thereof,

R_1 is hydrogen or alkoxy of 1–4 carbon atoms, R_2, and R_3 are each alkoxy of 1 to 4 carbon atoms

and R_4 and R_5 are each hydrogen or alkanoyl containing from 1 to 20 carbon atoms with the proviso that one of R_4 and R_5 is alkanoyl.

4,065,572

AMINO ACIDS AND ESTERS THEREOF USEFUL AS ANTIHYPERTENSIVE AGENTS

Joseph George Atkinson, Montreal, Canada; Clarence Stanley Rooney, Worcester, Pa.; Yves Girard, Dollard des Ormeaux, Canada, and Edward L. Engelhardt, Gwynedd Valley, Pa., assignors to Merck & Co., Inc., Rahway, N.J.

Filed Feb. 13, 1976, Ser. No. 657,827

Int. Cl.^{2} A01N *9/22;* A61K *31/415;* C07D *231/00, 233/04*

U.S. Cl. 424—273 R **14 Claims**

1. A compound of the formula

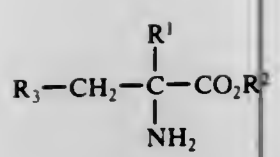

wherein R^1 and R^2 are hydrogen or lower alkyl and R^3 is a substituted benzene ring of the formula

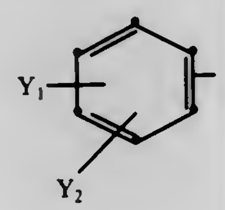

wherein Y_1 is hydrogen, cyanoamino, carboxyl, cyano, thiocarbamoyl, aminomethyl, guanidino, hydroxy, methanesulfonamido, nitro, amino, methanesulfonyloxy, carboxymethoxy, or methoxy and Y_2 is a substituted or unsubstituted 5-membered heterocyclic ring containing one or more nitrogen atoms.

2. A composition useful for treating hypertension comprising a therapeutically effective amount of a compound of claim 1 in combination with a pharmaceutically acceptable carrier.

4,065,573

4-AMINO-4-PHENYLCYCLOHEXANONE KETAL COMPOSITIONS AND PROCESS OF USE

Daniel Lednicer, Portage, Mich., assignor to The Upjohn Company, Kalamazoo, Mich.

Filed June 3, 1976, Ser. No. 692,589
Int. Cl.² A61K *31/335;* C07D *319/04, 317/72*
U.S. Cl. 424—278 **72 Claims**

1. A compound of the formula:

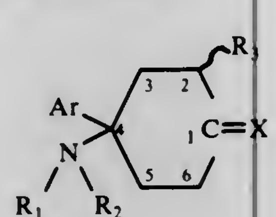

wherein X is

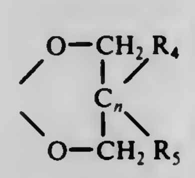

wherein n is zero or one and R_4 is hydrogen or methyl; R_5 is hydrogen, phenyl, —CH_2-alkenyl wherein alkenyl is of 2 to 4 carbon atoms, inclusive, or methyl; aryl is

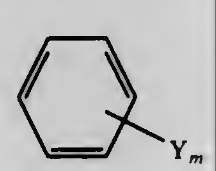

wherein m is zero, one or two, and Y is halogen, CF_3, alkyl of 1 to 4 carbon atoms, inclusive, alkoxy of 1 to 4 carbon atoms, inclusive, hydroxy, cycloalkyloxy of 3 to 6 carbon atoms, inclusive, alkanoyloxy of 2 to 4 carbon atoms, inclusive, alkylthio of 1 to 4 carbon atoms, inclusive, or

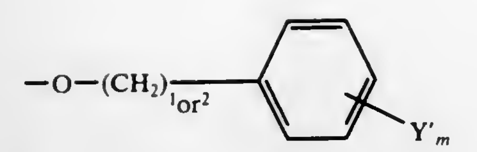

where Y' is halogen, CF_3, alkyl of 1 to 4 carbon atoms, inclusive, or alkoxy of 1 to 4 carbon atoms, inclusive; R_1 is hydrogen, or alkyl of 1 to 8 carbon atoms, inclusive, R_2 is hydrogen, alkyl of 1 to 8 carbon atoms, inclusive, —CH_2-alkenyl wherein alkenyl is of 2 to 8 carbon atoms, inclusive, acetyl, cycloalkylalkyl wherein cycloalkyl is of 3 to 6 carbon atoms, inclusive, and alkyl is of 1 to 3 carbon atoms, inclusive, β-hydroxyethyl, carbethoxymethyl, cycloalkyl of 3 to 6 carbon atoms, inclusive,

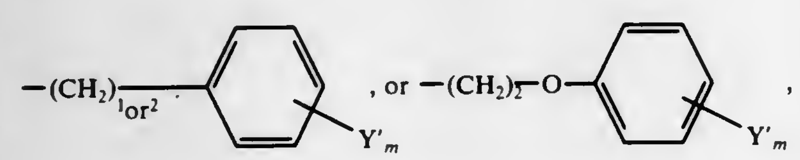

and R_3 is hydrogen, alkyl of 1 to 5 carbon atoms, inclusive, and the acid addition salts thereof.

51. A pharmaceutical composition in unit dosage form for relieving pain in animals comprising as an active ingredient an analgetic effective amount of a compound of the formula:

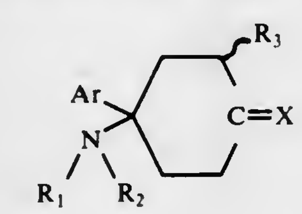

wherein X is

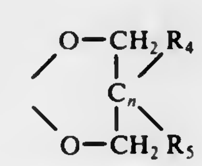

wherein n is zero or one and R_4 is hydrogen or methyl; R_5 is hydrogen, phenyl, —CH_2-alkenyl wherein alkenyl is of 2 to 4 carbon atoms, inclusive, or methyl; aryl is

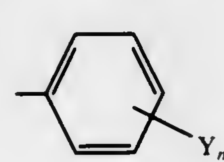

wherein m is zero, one or two, and Y is halogen, CF_3, alkyl of 1 to 4 carbon atoms, inclusive, alkoxy of 1 to 4 carbon atoms, inclusive, hydroxy, cycloalkyloxy of 3 to 6 carbon atoms, inclusive, alkanoyloxy of 2 to 4 carbon atoms, inclusive, alkylthio of 1 to 4 carbon atoms, inclusive, or

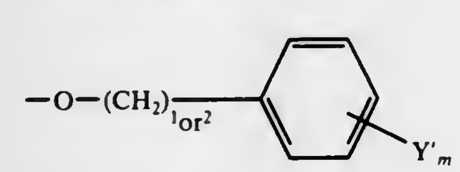

where Y' is halogen, CF_3, alkyl of 1 to 4 carbon atoms, inclusive, or alkoxy of 1 to 4 carbon atoms, inclusive; R_1 is hydrogen, or alkyl of 1 to 8 carbon atoms, inclusive, R_2 is hydrogen, or alkyl of 1 to 8 carbon atoms, inclusive, —CH_2-alkenyl wherein alkenyl is of 2 to 8 carbon atoms, inclusive, acetyl, cycloalkylalkyl wherein cycloalkyl of 3 to 6 carbon atoms, inclusive, and alkyl is of 1 to 3 carbon atoms, inclusive, β-hydroxyethyl, carbethoxymethyl, cycloalkyl of 3 to 6 carbon atoms, inclusive,

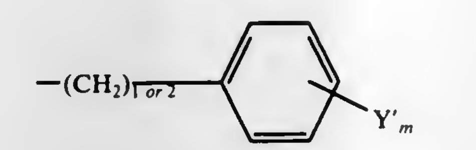

or

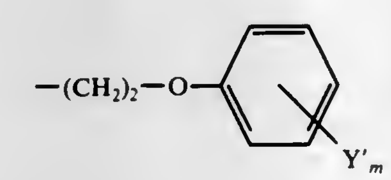

and R_3 is hydrogen, alkyl of 1 to 5 carbon atoms, inclusive, and the acid addition salts thereof, in association with a pharmaceutical carrier.

62. A process for inducing analgesia in humans and animals comprising the administration of an analgetic amount of a compound of the formula:

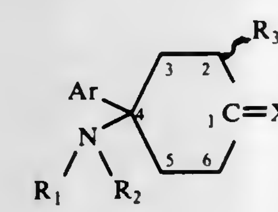

wherein X is

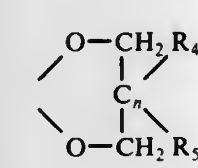

wherein n is zero or one and R_4 is hydrogen or methyl; R_5 is hydrogen, phenyl, —CH_2-alkenyl wherein alkenyl is of 2 to 4 carbon atoms, inclusive, or methyl; aryl is

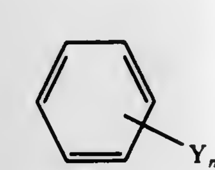

wherein m is zero, one or two, and Y is halogen, CF_3, alkyl of 1 to 4 carbon atoms, inclusive, alkoxy of 1 to 4 carbon atoms, inclusive, hydroxy, cycloalkyloxy of 3 to 6 carbon atoms, inclusive, alkanoyloxy of 2 to 4 carbon atoms, inclusive, alkylthio of 1 to 4 carbon atoms, inclusive, or

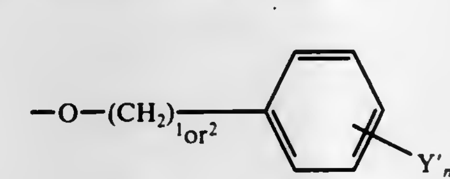

where Y' is halogen, CF_3, alkyl of 1 to 4 carbon atoms, inclusive, or alkoxy of 1 to 4 carbon atoms, inclusive; R_1 is hydrogen, or alkyl of 1 to 8 carbon atoms, inclusive, R_2 is hydrogen, alkyl of 1 to 8 carbon atoms, inclusive, —CH_2-alkenyl wherein alkenyl is of 2 to 8 carbon atoms, inclusive, acetyl, cycloalkylalkyl wherein cycloalkyl is of 3 to 6 carbon atoms, inclusive, and alkyl is of 1 to 3 carbon atoms, inclusive, β-hyhydroxyethyl, carbethoxymethyl, cycloalkyl of 3 to 6 carbon atoms, inclusive,

hydroxyethyl, carbethoxymethyl, cycloalkyl of 3 to 6 carbon atoms, inclusive,

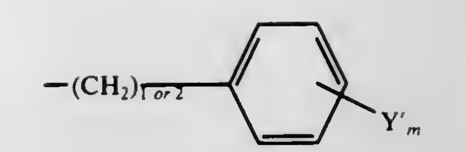

or

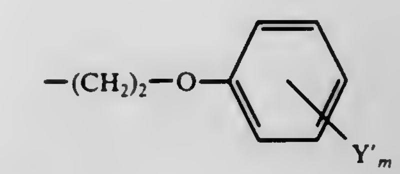

and R_3 is hydrogen, alkyl of 1 to 5 carbon atoms, inclusive, and the acid addition salts thereof, to a human or animal subject.

4,065,574

NEW METHOD FOR CONTROLLING FUNGI USING 4-CHROMONE, 4-CHROMANONE, 4-CHROMONE OXIME AND 4-CHROMANONE OXIME COMPOUNDS

Malcolm W. Moon, Kalamazoo, Mich., and John C. Sharp, Marlinton, W. Va., assignors to The Upjohn Company, Kalamazoo, Mich.

Continuation-in-part of Ser. No. 608,850, Aug. 29, 1975, abandoned, which is a continuation of Ser. No. 457,053, April 1, 1974, abandoned. This application Aug. 12, 1976, Ser. No. 713,922
Int. Cl.² A01N *9/28*
U.S. Cl. 424—283 **12 Claims**

1. A method for controlling fungi comprising the appliction of an effective antifungal amount of a compound of the formula:

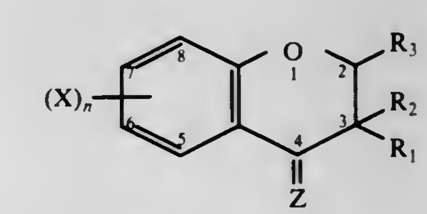

wherein X is chlorine, bromine, lower alkyl of 1 to 4 carbon atoms, trifluoromethyl, methoxy, ethoxy, methylthio, or ethylthio; n is an integer 0, 1, 2, or 3; Z is the oxygen atom or the oximino group (=NOH); R_3 is hydrogen, halogen, hydroxyl, or lower alkyl; and R_1 and R_2 are halogen, lower alkyl, or hydrogen provided that X and n are selected independently and that 6-X is 6-chloro or 6-bromo when R_3 is hydroxyl, applied to fungi.

4,065,575

3-AMINOMETHYL DERIVATIVES OF 4-CHROMANONE

Maurice Joullié, Saint-Germain-en-Laye; Gabriel Maillard, Paris; Lucien Lakah, Paris, and Christian Jean Marie Warolin, Paris, all of France, assignors to Joullie International, Neuilly-sur-Seine, France

Filed Feb. 20, 1976, Ser. No. 659,708
Claims priority, application France, Feb. 20, 1975, 75.05298
Int. Cl.² A61K *31/35;* C07D *311/02*
U.S. Cl. 424—283 **2 Claims**

1. A method of providing a vasodilating effect to a subject requiring a vasodilating effect which comprises administering to said subject a vasodilating effective amount of a compound of the formula:

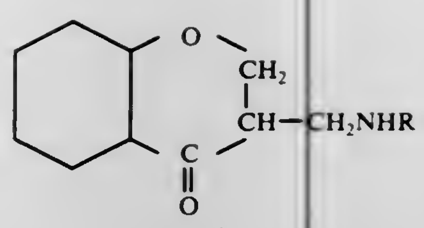

wherein R is alkyl of 1 through 6 carbon atoms or alkoxyalkyl of 2 through 6 carbon atoms.

4,065,576

METHOD FOR USING A RUMINANT REPELLENT COMPRISING OXIDATION PRECURSORS OF ALIPHATIC ALDEHYDES

Katashi Oita; Marion R. San Clemente; John H. Oh, and George T. Tiedeman, all of Seattle, Wash., assignors to Weyerhaeuser Company, Tacoma, Wash.

Continuation-in-part of Ser. No. 502,003, Aug. 30, 1974, abandoned, which is a continuation-in-part of Ser. No. 291,059, Sept. 21, 1972, abandoned. This application July 12, 1976, Ser. No. 704,364

Int. Cl.² A01N *9/24*

U.S. Cl. 424—318 **8 Claims**

1. A method for discouraging ruminants from browsing on leaves normally eaten by said ruminants comprising applying a mixture of a repellent-producing amount of an ingredient comprising oleic acid or an alkali metal, alkaline earth metal or ammonium salt of oleic acid and a repellent-producing amount of an additional ruminant repellent to leaves normally eaten by ruminants in a nonphytotoxic amount effective to discourage browsing of said leaves by said ruminants.

4,065,577

METHOD FOR USING A RUMINANT REPELLENT COMPRISING ALIPHATIC ALDEHYDES

Katashi Oita; Marion R. San Clemente; John H. Oh, and George T. Tiedeman, all of Seattle, Wash., assignors to Weyerhaeuser Company, Tacoma, Wash.

Division of Ser. No. 502,003, Aug. 30, 1974, abandoned, which is a continuation-in-part of Ser. No. 291,059, Sept. 21, 1972, abandoned. This application June 30, 1976, Ser. No. 701,110

Int. Cl.² A01N *9/24*

U.S. Cl. 424—333 **4 Claims**

1. A method for discouraging ruminants from browsing material normally eaten by said ruminants comprising:

contacting said material with an amount of a repellent composition effective to discourage browsing of said material by said ruminants, said repellent composition containing as the principal active repellent ingredient a volatile aliphatic aldehyde.

4,065,578

XYLITOL CHEWING GUM WITH HYDROPHILLIC COLLOID BINDER

Richard A. Reggio, Yorktown Heights, N.Y.; Dominick R. Friello, Danbury, and John E. Beam, Norwalk, both of Conn., assignors to Life Savers, Inc., New York, N.Y.

Filed Aug. 23, 1976, Ser. No. 716,928

Int. Cl.² A23G *3/30*

U.S. Cl. 426—3 **14 Claims**

1. A sugarless chewing gum in the form of a soft, moist, continuous cohesive gum, which comprises gum base, xylitol as a bulk filler and sweetener, and a hydrocolloid selected from the group consisting of xanthan gum or an alginate derivative of kelp as a binder to facilitate formation of the soft, moist, continuous cohesive gum, said hydrocolloid being present in an amount within the range of from about 0.03 to about 1.0% by weight of said chewing gum.

4,065,579

LONG-LASTING FLAVORED CHEWING GUM INCLUDING CHALK-CONTAINING GUM BASE

Donald A. M. Mackay, Pleasantville, NY, and Daniel Schoenholz, Basking Ridge, N.J., assignors to Life Savers, Inc., New York, N.Y.

Filed Oct. 12, 1976, Ser. No. 731,162

Int. Cl.² A23G *3/30*

U.S. Cl. 426—3 **15 Claims**

1. A flavored chewing gum having a prolonged sweet taste comprising chalk-containing gum base, and from about 0.02 to about 2.5% by weight of a particulate slowly extractable or poorly water-soluble sweetener coated with an edible coating agent dispersed in said chalk containing gum base, said particulate poorly water-soluble sweetener comprising free saccharin acid or free cyclamic acid.

4,065,580

LIPOLYTIC ENZYME FLAVORING SYSTEM

Louis I. Feldman, Morton Grove, and J. Gordon Dooley, Glenview, both of Ill., assignors to GB Fermentation Industries, Inc., Kingstree, S.C.

Continuation of Ser. No. 458,737, April 8, 1974, abandoned. This application Nov. 17, 1975, Ser. No. 632,605

Int. Cl.² A23D *5/00;* **A23C** *19/00;* **C07G** *7/02*

U.S. Cl. 426—33 **21 Claims**

1. A method for producing a lipolytic enzyme system having esterase and lipase activity in a ratio of from 1 part of lipase activity to from 1 to about 10 parts of said esterase activity, said method comprising culturing *Mucor miehei* on a nutrient medium and recovering said lipolytic enzyme system substantially free of *Mucor miehei rennet* activity.

4,065,581

BUNS WHICH HAVE CENTRALLY-LOCATED RECESSES

Theodore B. Heiderpriem, 4225 1/2 Ravenwood, Pine Lawn, Mo. 63121

Continuation of Ser. No. 411,098, Oct. 30, 1973, abandoned, which is a division of Ser. No. 276,746, July 1, 1972, abandoned. This application July 17, 1975, Ser. No. 596,841

Int. Cl.² A21D *8/06, 13/00*

U.S. Cl. 426—138 **6 Claims**

1. The process of making a centrally recessed bun from a layer of initially flat yeast-raised dough, comprising laying the dough layer on a support of heat-resistant material, a surface of which is displaced in an upward direction from the support and with a recess of semi-circular cross section which is displaced in the downward direction from the said support and which extends around, and extends laterally outwardly relative to the said surface, with an inclined wall which extends upwardly from the inner periphery of said recess to the periphery of said surface, permitting the layer of so-placed dough to airproof itself whereby, in the proofed state, the layer is thicker and the peripheral edge thereof largely fills and contacts the recess and assumes the semi-circular cross section of said recess, with the proofed layer of yeast-raised dough receiving on one side thereof full support from said surface, said recess, and said inclined wall, during and subsequent to the proofing thereof, and being in contact with said surfaces, and baking the so-supported and proofed dough, to form a bun which has a centrally located recess defined by an upwardly and outwardly inclined wall with a gently rounded upper edge, and with those external surfaces of the bun unrestrictedly exposed to the air during proofing and baking having a crust of lower porosity than that of the other surfaces, with the other surfaces thereof and the inner bun material having higher porosity, whereby said bun is adapted to absorb materials of substantial liquidity through and in said higher porosity portions, while substantially preventing passage thereof through the external surfaces of substantially lower porosity resulting from the air proofing and subsequent baking of the exposed areas of said layer.

4,065,582

FRUIT PEELING METHOD

John Webb, Clearwater, and Alan Houghton, Dunedin, both of Fla., assignors to Webbs Machine Design, Clearwater, Fla.

Division of Ser. No. 526,331, Nov. 22, 1974, Pat. No. 3,982,482. This application June 7, 1976, Ser. No. 693,226

Int. Cl.² A23L *1/212*

U.S. Cl. 426—231 **11 Claims**

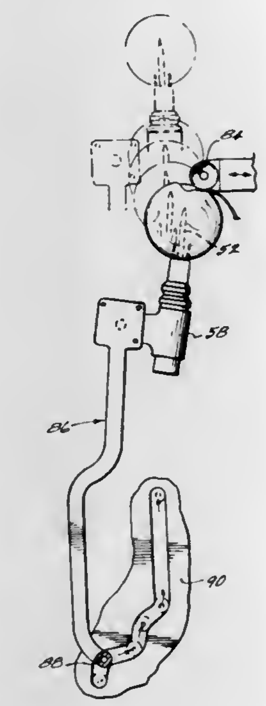

1. A method of peeling fruit having a peel and an edible interior portion comprising the steps of:

penetrating an electrically conductive element into said interior portion;

applying a cutter blade to the peel of said fruit;

moving said blade inward into said fruit and rotating said fruit during blade movement to cause said blade to cut into and remove said peel;

applying an A.C. electrical signal between said blade and said conductive means so that current flows through said fruit;

detecting the impedance between said blade and conductive element to determine when said blade has penetrated to said edible interior portion; and

moving said blade outward upon determining that the edible portion has been penetrated.

4,065,583

METHOD OF COOKING AN ITEM OF FOOD, USING A FOOD SHEET AND AN OPEN BOTTOMED PAN

David William Ahlgren, Duluth, Minn., assignor to Jeno F. Paulucci, Duluth, Minn.

Filed May 19, 1976, Ser. No. 687,926

Int. Cl.² A21D *8/06*

U.S. Cl. 426—243 **4 Claims**

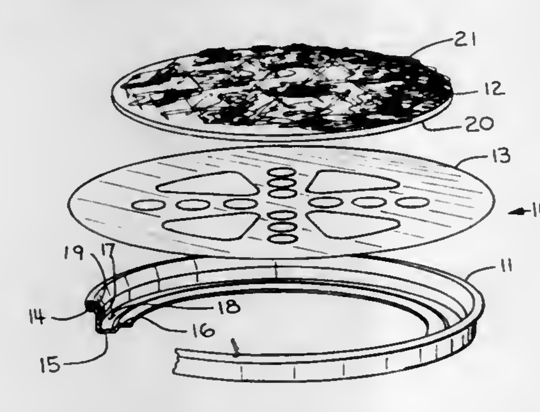

1. A method of cooking an item of food comprising the steps of:

a. providing an initially flat sheet of soft metal wrapping foil, said foil sheet being manually flexible and having a perforated central portion atop which an item of food may be placed;

b. providing an open-bottomed rigid pan of lesser size than the foil sheet, said pan being provided with an annular inner bottom rim for supporting the foil sheet and an item of food upon the foil sheet, and an outer upright peripheral flange for positioning a food item upon the annular inner rim;

c. providing an item of food to be cooked while on the foil and in the pan, said item of food having a bottom made of bread;

d. placing both the foil sheet and the item of food atop of and on the pan with the bread bottom of the food item being placed against the perforated central portion of the foil sheet;

e. pushing the food item and the foil sheet down into the pan; while simultaneously

f. wiping a margin of the foil sheet against the outer flange of the pan and simultaneously forming an outer portion of the foil sheet margin upwardly about and around the food item so that there is an upright margin flange between the food item and the pan outer flange; then

g. placing the pan, foil sheet and food item together as a package into an oven;

h. applying infra-red radiant heat upwardly through the perforations of the foil sheet and directly against at least part of the bread bottom of the food item; and

i. browning a portion of the bread bottom while cooking the food item; then

j. discharging the package from the oven after cooking the food to an extent required to prepare it for consumption; and then simultaneously

k. removing the foil sheet and the food item from the pan.

4,065,584

SULPHUR CONTAINING ARYLAMINE DERIVATIVES

Victor Lafon, Paris, France

Filed Sept. 29, 1975, Ser. No. 617,664

Claims priority, application United Kingdom, Sept. 30, 1974, 42387/74

Int. Cl.² A01N *9/20, 9/24;* **C07C** *87/02*

U.S. Cl. 424—316 **2 Claims**

1. A therapeutic composition comprising an anorectically effective amount of 2-phenylsulphinyl-1-diethylaminoethane citrate in association with a physiologically acceptable excipient.

2. A therapeutic composition comprising an anorectically effective amount of 2-phenylsulphinyl-1-dimethylaminopropane hydrochloride in association with a physiologically acceptable excipient.

4,065,585

RENEWABLE CHOW FUSER COATING

Raymond L. Jelfo, Lewisville, Tex.; Stephen Strella, Pittsford, and Willard C. Hamilton, Webster, both of N.Y., assignors to Xerox Corporation, Stamford, Conn.

Division of Ser. No. 487,937, July 12, 1974, Pat. No. 3,934,547. This application July 30, 1975, Ser. No. 600,333

Int. Cl.² B05D *3/12;* **G03G** *13/20*

U.S. Cl. 427—11 **5 Claims**

1. The method of fusing toner images to support sheets as part of the process of making xerographic reproductions by means of a xerographic reproduction apparatus including the steps of:

rotating a heated thermally conductive core which core is rotatably supported in said reproduction apparatus;

contacting said heated thermally conductive core with a solid low surface energy coating material to form a thin solid coating layer thereon;

subsequently applying a low viscosity liquid release agent to said layer; and

passing said support sheets having said toner images adhered thereto into contact with said heated core having said solid coating layer and said release agent thereon such that

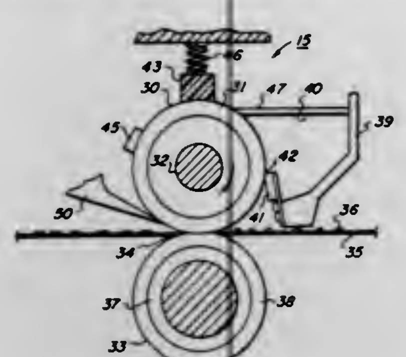

said toner images contact said release agent and simultaneously applying pressure to said toner images while contacting said heated thermally conductive core with said coating material.

4,065,586
FIXING METHOD USING POLYARYLSILOXANES AS RELEASE AGENTS
Clifford O. Eddy, and Thomas R. Hoffend, both of Webster, N.Y., assignors to Xerox Corporation, Stamford, Conn.
Filed Mar. 1, 1976, Ser. No. 662,658
Int. Cl.² G03G *13/20*
U.S. Cl. 427—22 **20 Claims**

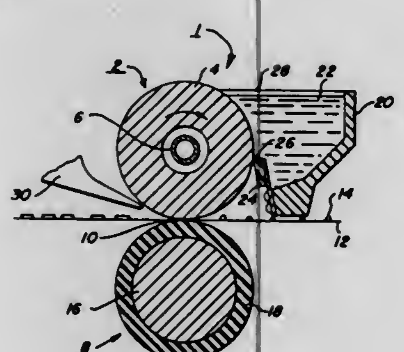

1. The method of fusing electroscopic toner images to a substrate including the steps of:
a. forming a film on a heated metal fuser member in an electrostatic reproducing apparatus, said film being a barrier to electroscopic toner and comprising the product resulting from the interaction of the fuser member and a polyarylsiloxane having at least about 0.5 aryl group or substituted aryl group per molecule which interacts with the fuser member surface, said polyarylsiloxane being fluid at the temperature of the fuser member and acting as a release fluid film for the electroscopic toner;
b. contacting the toner images on said substrate with the coated, heated fuser member for a period of time sufficient to soften the electroscopic toner; and
c. allowing the toner to cool.

4,065,587
U.V. CURABLE POLY(ETHER-URETHANE) POLYACRYLATES AND WET-LOOK POLYMERS PREPARED THEREFROM
Vincent Wen-Hwa Ting, Brunswick, Ohio, assignor to SCM Corporation, New York, N.Y.
Filed May 11, 1976, Ser. No. 685,374
Int. Cl.² B05D *3/06*
U.S. Cl. 427—54 **16 Claims**
1. A poly(ether-urethane)polyacrylate polymer comprising the product obtained by reacting a polyurethane intermediate having 4 to 10 terminally-positioned reactive isocyanate groups with 4 to 10 molar equivalents of a hydroxy (lower) acrylate or methacrylate, said intermediate resulting from the reaction of 1 to 7 moles of a polyether diol having a molecular weight in the range of 100 to 10,000; 2 to 8 moles of a monomer polyol having 3 to 12 carbon atoms and at least 3 reactive hydroxyl groups; and 6 to 24 moles of an organic diisocyanate.
9. A process for imparting a wet look coating to a substrate which comprises:
a. forming a radiation curable composition comprising on a weight percent basis:
i. 30 to 70 percent of a poly(ether-urethane) polymer of claim 1:
ii. 10 to 40 percent of a monofunctional acrylate monomer
iii. 5 to 50 percent of a multifunctional acrylate cross-linking agent; and
iv. 3 to 5 percent of a photosensitizer; said composition totaling 100 percent;
b. applying said mixture as a 0.1 to 10 mil thick coating to a substrate selected from the group consisting of flat stock metal, wood, fiberboard and floor tile; and
c. curing said coating substrate in air at ambient temperature by passing the substrate at a rate of from 10 to 1000 foot/-minute through an effective field of ultraviolet radiation.

4,065,588
METHOD OF MAKING GOLD-COBALT CONTACT FOR SILICON DEVICES
Anthony Francis Arnold, Ringoes, N.J., assignor to RCA Corporation, New York, N.Y.
Filed Nov. 20, 1975, Ser. No. 633,696
Int. Cl.² H01L *29/46;* **B32B** *15/04;* **H01L** *21/283*
U.S. Cl. 427—89 **2 Claims**

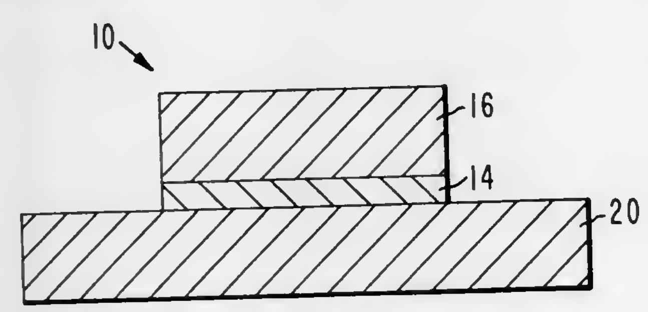

1. A method of making a contact to a silicon body comprising:
depositing a layer of gold directly on said silicon body;
depositing a layer of cobalt directly on said layer of gold without intermediate exposure to oxygen; and
heating said deposited silicon body to a temperature between about 300° and about 370° C in a reducing atmosphere.

4,065,589
POLYMERIC COATING FOR PROTECTION OF GLASS SUBSTRATE
William Lenard, Temperance, Mich., and Lynn J. Taylor, Toledo, Ohio, assignors to Owens-Illinois, Inc., Toledo, Ohio
Filed June 9, 1975, Ser. No. 585,111
Int. Cl.² B65D *11/16*
U.S. Cl. 428—35 **3 Claims**
1. As an article of manufacture, a glass container at least partially coated with a single protective polymeric film having a thickness of at least **0.002** inch and sufficient to resist glass shattering of the container under pressure, the crosslinked film having been formed in situ on the glass container from a composition consisting of about 70% to about 98.99% by weight of at least one rubbery thermoplastic organic polymer, about 0.01% to about 10% by weight of at least one peroxidic organic compound, and about 1% to about 29.99% by weight of at least one polyfunctional monomer; said polymer being an elastomeric organic polymer having an ultimate elongation of at least **100%**, being crosslinkable and being selected from the group consisting of ethylene-vinyl acetate copolymers, hydrolyzed ethylene-vinyl acetate copolymers, ethylene-ethyl acrylate copolymers, ethylene-acrylic acid copolymers and their salts, ethylene-propylene copolymers, styrene-butadiene copolymers including both block and random copolymers, styrene-isoprene copolymers, acrylonitrile-butadiene copolymers, isobutylene-isoprene copolymers, polyurethane thermoplastic polyesters, ethylene-propylene-diene terpolymers, styrene-ethylene-butylene block terpolymers, polypentenamers, and

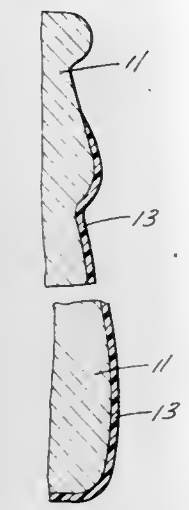

polyamides derived from a dimer acid; said peroxidic organic compound possessing at least one oxygen-oxygen bond; and said polyfunctional monomer being a polymerizable ethylenically unsaturated monomer having a functionality of at least two.

4,065,590
ETHYLENE COPOLYMER GLASS BOTTLE COATING
George Anthony Salensky, Metuchen, N.J., assignor to Union Carbide Corporation, New York, N.Y.
Filed Oct. 13, 1976, Ser. No. 732,128
Int. Cl.² B05D *1/24, 3/02*
U.S. Cl. 428—35 **12 Claims**
1. An article of manufacture comprising a glass bottle having its outer surface coated with a clear continuous layer of a blend of:
A. about 80 to about 99 percent by weight, based on the total weight of the blend, of a random, normally solid ethylene copolymer selected from the group consisting of normally solid ethylene/acrylic acid copolymers, ethylene/methacrylic acid copolymers and copolymers having 10% to 90% weight of the carboxylic acid groups of said ethylene/acrylic or ethylene/methacrylic acid copolymers ionized by neutralization with metal ions having an ionized valence of one to three inclusive, wherein said random ethylene copolymers contain from about 8 to about 25 percent by weight of acrylic or methacrylic acid copolymerized therein;
B. about 0.5 to about 3 weight percent, based on the total weight of the blend, of an anti-caking agent selected from the class consisting of saturated fatty acid amides having about 10 to about 22 carbon atoms, monohydroxy substituted saturated fatty acid amides having about 10 to about 22 carbon atoms or alkylene bis-saturated fatty acid amides having the general formula:

$$\underset{(\mathrm{OH})_y}{\mathrm{R''}}-\overset{\mathrm{O}}{\overset{\|}{\mathrm{C}}}-\overset{\mathrm{H}}{\overset{|}{\mathrm{N}}}-(\mathrm{CH_2})_x-\overset{\mathrm{H}}{\overset{|}{\mathrm{N}}}-\overset{\mathrm{O}}{\overset{\|}{\mathrm{C}}}-\underset{(\mathrm{OH})_y}{\mathrm{R'}}$$

wherein x is an integer having values of 0 to about 12, R′ and R″ are each aliphatic hydrocarbon residues having about 10 to about 22 carbon atoms and y is an integer having values of 0 to 2 inclusive;
C. about 0.1 to about 1 percent by weight, based on the total weight of the blend, of a silicone fluid lubricity additive having the formula:

$$\mathrm{Me_3SiO(Me_2SiO)}_z\underset{\mathrm{R'''}}{\overset{\mathrm{Me}}{(\mathrm{SiO})}}_t\mathrm{SiMe_3}$$

wherein Me is methyl, z is an integer having an average value of about 6 to about 40, t is an integer having an average value of about 3 to about 40, and r''' is a monovalent group selected from the class consisting of —C_2H_4-phenyl and alkyls having about 18 to about 22 carbon atoms; and
D. 0 to about 16 weight percent, based on the total weight of the blend, of an adhesion modifier selected from the class consisting of polyethylene glycols having a molecular weight of about 190–6000, monomethyl ethers of polyethylene glycols having a molecular weight of about 550–5000, and magnesium oxide having a particle size of less than about 0.1 micron and a surface area of greater than about 50 square meters per gram.

4,065,591
PITCH IMPREGNATED ARTICLES AND PROCESS FOR MAKING SAME
Charles R. Gannon, Ashland, Ky., assignor to Ashland Oil, Inc., Ashland, Ky.
Division of Ser. No. 390,670, Aug. 22, 1973, Pat. No. 3,953,628. This application Jan. 16, 1976, Ser. No. 649,751
Int. Cl.² F16L *9/14;* **B05D** *1/18*
U.S. Cl. 428—36 **12 Claims**
10. An impregnated pipe having a metallic colored surface comprising;
a. a porous tubular body;
b. a solidified pitch selected from the group consisting of coal tar pitch, oxidized petroleum pitch, unoxidized petroleum pitch and mixtures thereof at least partially permeating into the porous spaces of said tubular body, and forming a film of pitch over at least a portion of the tubular body surface; and
c. stearic acid and aluminum pigment previously milled in the presence of stearic acid contained within said film of pitch, the ratio of stearic acid to pigment being between about 4 and and about 30 parts by weight per 100 parts by weight of metallic pigment.

4,065,592
SOLAR ENERGY ABSORBER
Patrick Von McAllister, Salt Lake City, Utah, assignor to Hercules Incorporated, Wilmington, Del.
Filed Apr. 14, 1976, Ser. No. 677,091
Int. Cl.² B32B *3/02*
U.S. Cl. 428—92 **9 Claims**

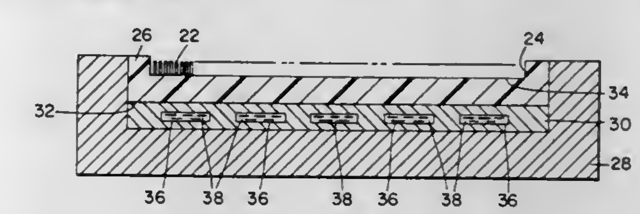

1. A solar energy absorber comprising a multiplicity of nonmetallic fibers, stable in air at temperatures of up to about 500° F., said fibers being substantially straight and aligned in a parallel and side-by-side relationship, substantially all of said fibers having at least one free end, said fibers having diameters of from about 4 micrometers to about 100 micrometers, said fibers being spaced apart such that the distance between adjacent fibers is from about 1 micrometer to about 10 micrometers, the free ends of the fibers being tapered and the free ends of said tapered fibers being coated with a material having an emissivity of less than about 0.05, said coated free ends of the fibers comprising the solar energy absorbing surface.

4,065,593
SOLAR ENERGY ABSORBER
Albert Henry Peterson, Sandy, Utah, assignor to Hercules Incorporated, Wilmington, Del.
Filed Apr. 14, 1976, Ser. No. 677,093
Int. Cl.² B32B *3/02*
U.S. Cl. 428—92 **3 Claims**
1. A solar energy absorber comprising a multiplicity of carbon fibers, said carbon fibers having diameters of from about 4 micrometers to about 12 micrometers, said fibers being substantially straight and aligned in parallel and side-by-side

relationship, substantially all of said fibers having at least one free end, the free ends of said fibers comprising the solar en-

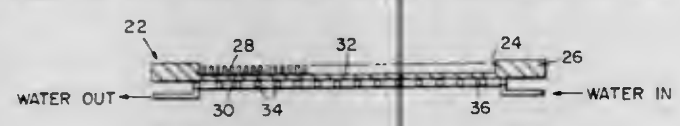

ergy absorbing surface, said fibers being spaced apart such that the distance between adjacent fibers is from about 1 micrometer to about 20 micrometers.

4,065,594
METHOD OF SHAPING ORIENTED MATERIALS OF POLYOLEFIN
Hikaru Shii, and Eisuke Oda, both of Yokohama, Japan, assignors to The Furukawa Electric Co. Ltd., Tokyo, Japan
Filed May 15, 1974, Ser. No. 470,020
Claims priority, application Japan, May 21, 1973, 48-55584
Int. Cl.² B29D *7/14*
U.S. Cl. 428—113 **15 Claims**

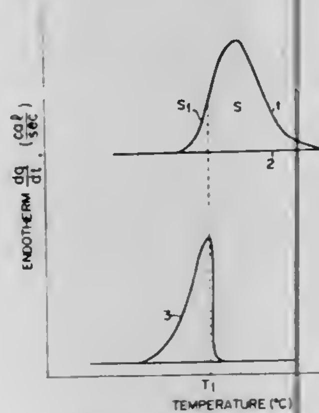

1. A method of manufacturing shaped articles of polyolefin oriented materials which comprises:

providing oriented filmy or fibrous raw polyolefin material satisfying the following requirements:

a. K determined from a melting curve by differential scanning calorimetry smaller than 60%,

b. long period L determined from small angle X-ray scattering intensity larger than 500A, and

c. crystallinity C higher than 80%,

aggregating said polyolefin material into desired shape, and pressing the aggregated material at a pressure of 50 to 1000 kg/cm² at a temperature higher than the glass transition point and lower than the thermal distortion point of said polyolefin material whereby the aggregated material is formed into an integral mass simply by the effect of the applied pressure and without use of adhesive.

5. Shaped polyolefin products formed substantially by the method set forth in claim 1.

4,065,595
THERMOGRAPHIC STENCIL SHEET AND METHOD OF MAKING AN IMAGED STENCIL SHEET
Margery L. Schick, Mount Prospect, and Bror E. Anderson, Arlington Heights, both of Ill., assignors to Weber Marking Systems, Inc., Arlington Heights, Ill.
Filed Nov. 5, 1974, Ser. No. 521,034
Int. Cl.² G03G *5/022*
U.S. Cl. 428—141 **2 Claims**

1. A thermographic stencil sheet adapted to be disposed in imaging contact with an original on one side thereof, which comprises:

an ink-pervious fibrous stencil base tissue sheet having a weight of about 4½ to 12 lbs. per 3,000 sq. ft.,

a first layer of a heat-flowable composition provided on the tissue sheet by deposition of the composition on the tissue sheet from a volatile solvent solution thereof and removing the solvent therefrom by drying until at least about dry to the touch, said first layer when dry having external surfaces which are uneven due to the unevenness of the underlying tissue sheet, and

a second layer of a heat-flowable composition provided on said first layer by deposition of the composition on the first layer from a volatile solvent solution thereof and removing solvent therefrom by drying, said second layer filling the low areas on one surface of said first layer and providing an even surface on the resulting stencil sheet for intimate contact with an original,

said heat-flowable composition for each layer including a thermoplastic film-forming material comprising a cellulose organic ester, and plasticizing material partially but incompletely compatible with the film-forming material,

said layers providing an ink-impervious coating on the tissue sheet.

4,065,596
ARTIST'S BOARD
James Groody, 281-1 Windybush Road, R.D. No. 2, New Hope, Pa. 18938
Filed Apr. 22, 1976, Ser. No. 679,182
Int. Cl.² B32B *7/02*
U.S. Cl. 428—215 **4 Claims**

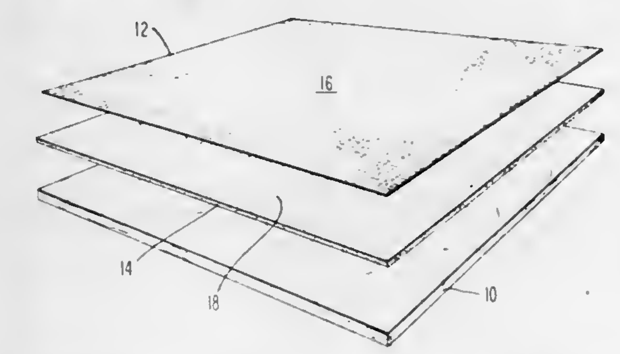

1. A laminated artist's board comprising a rear substantially rigid stiffener member, a front member of fibrous material consisting of paper, cotton duck or linen, said fibrous material having a plastic paintable surface thereon consisting of polyethylene, polypropylene, acrylic, vinyl or epoxy resins and an intermediate flexibly resilient member consisting of rubber, vulcanizates of acrylic elastomers or foamed plastic, the combined hardness of the front and intermediate members being such that the application of a paint brush to the paintable surface will be cushioned and indent the surface but the indentation will recover substantially instantaneously.

4,065,597
FIBRE-REINFORCED LAMINATES
David L. Gillespie, Grovers Farm, Dippenhall, Farnham, Surrey, England
Filed June 17, 1975, Ser. No. 587,697
Claims priority, application United Kingdom, June 26, 1974, 28465/74
Int. Cl.² C04B *31/06*
U.S. Cl. 428—285 **14 Claims**

1. A lamina of plaster reinforced with monofilament, continuous strand glass fibre in the form of at least one mat distributed substantially throughout the thickness thereof.

4,065,598
PROCESS FOR POLYMERIC MODIFICATION OF A FIBER
Kooji Takahashi, Otsu; Tatsuji Kojima, Kyoto; Teruo Ishikawa, Otsu; Kimio Nakamura, Otsu, and Shizuyoshi Ikenaga, Otsu, all of Japan, assignors to Toray Industries, Inc., Tokyo, Japan
Continuation of Ser. No. 559,176, March 17, 1975, abandoned, which is a continuation-in-part of Ser. No. 279,322, Aug. 10, 1972. This application Mar. 15, 1977, Ser. No. 777,655
Int. Cl.² B32B *27/00;* **D02G** *3/00*
U.S. Cl. 428—394 **33 Claims**

1. A process for imparting antistatic, soil release and water-absorbing properties to a synthetic fiber structure which comprises adhering to the fiber structure a compound selected from the group consisting of diacrylate, dimethacrylate, triacrylate and trimethacrylate compound having a polyalkylene oxide segment which has a molecular weight of from 400 to 10,000 and which includes an alkylene substituent selected from the group consisting of ethylene groups, propylene groups and a mixture of ethylene groups and propylene groups, and after such adhesion heat-treating the adhered compound and fiber structure in the presence of moisture, whereby polymerization of said compound is carried out on the fiber to form a uniform and smooth film having a thickness of about 0.01 -10μ and the surface of the fiber is covered by said polymer film of said compound.

4,065,599
SPHERICAL OBJECT USEFUL AS FILLER MATERIAL
Shiro Nishiumi; Shoichi Hasegawa, both of Otsu; Toshiyuki Mizoguchi, Osaka, and Sachiko Furuta, Otsu, all of Japan, assignors to Toray Industries, Inc., Tokyo, Japan
Continuation-in-part of Ser. No. 324,142, Jan. 16, 1973, abandoned. This application Nov. 18, 1975, Ser. No. 633,077
Claims priority, application Japan, Jan. 19, 1972, 47-6884; Jan. 25, 1972, 47-8719
Int. Cl.² B32B *27/02*
U.S. Cl. 428—402 **8 Claims**

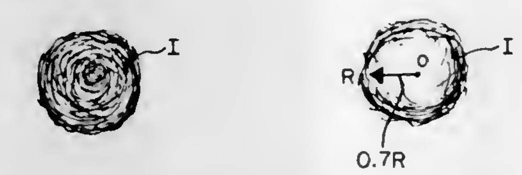

1. A spherical object useful as a filler material having a round cross-section having a diameter of from 5 to 50 mm, said object having a surface shell composed of a plurality of arcuately arranged synthetic organic polymeric filaments of at least 0.2 m in length and between 2 and 20 denier in fineness being concentrated near the surface of said spherical object to form an outer portion near the surface of said spherical object, and said spherical object having a less dense inner portion and an average bulk density of between 1 and 30 mg/cm³, said filaments being arranged along different arcuate paths which are angularly related to each other such that different filaments intersect with one another at different points relative to the surface of said object, said filaments being adhesively fixed to each other at the points of intersection.

7. A quilting or cushioning article composed of a multiplicity of spherical objects as recited in claim 1, filled in said article.

4,065,600
METAL OXIDE FILMS
Robert David King, Solihull; Robert Hiscutt, and Peter Molineux, both of Birmingham, all of England, assignors to Triplex Safety Glass Company Limited, London, England
Filed May 18, 1971, Ser. No. 144,541
Claims priority, application United Kingdom, May 20, 1970, 24510/70
Int. Cl.² C01C *15/00*
U.S. Cl. 428—432 **42 Claims**

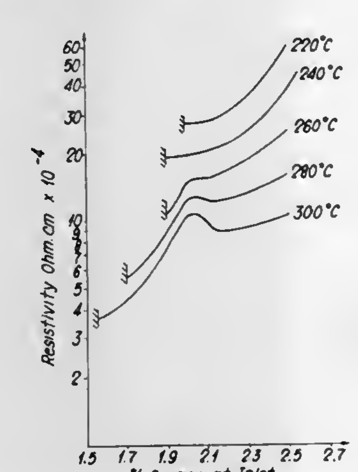

1. A method of depositing a transparent electrically conductive metal oxide coating by reactive sputtering onto the surface of a substrate, wherein: the substrate is supported, in spaced relationship with a cathode which is to be sputtered, in a vacuum chamber containing an atmosphere comprising an inert gas and a controlled oxygen concentration at a selected reduced total pressure, the substrate is heated prior to sputtering to a selected elevated temperature, and reactive sputtering is caused by applying a selected negative potential to the cathode relative to the substrate, the oxygen in the atmosphere being provided and maintained at a selected concentration, and the heating of said substrate being controlled during sputtering to maintain said substrate temperature substantially constant at said selected temperature during heating of said substrate caused by sputtering, the selected values of the oxygen concentration, substrate temperature, vacuum chamber pressure, and cathode potential being so chosen that the deposited coating is haze-free, and its specific electrical resistivity lies at or close to the minimum of the curve which is obtained by plotting specific electrical resistivity against oxygen concentration while maintaining the substrate temperature, vacuum chamber pressure and cathode potential all constant at said selected values.

22. An article with a transparent and haze-free, electrically conductive metal oxide coating having a specific electrical resistivity below 20×10^{-4} ohm. cm. applied thereon by a process according to claim 1.

4,065,601
TWO PHASE ELECTROLYTES USED AS HALOGEN TRAPS IN METAL HALOGEN SECONDARY CELLS AND BATTERIES
Alfred M. Ajami, Boston; Fraser M. Walsh, Arlington, and Dennis N. Crouse, Melrose, all of Mass., assignors to Eco-Control, Inc., Cambridge, Mass.
Filed Sept. 14, 1976, Ser. No. 723,142
Int. Cl.² H01M *10/44*
U.S. Cl. 429—50 **14 Claims**

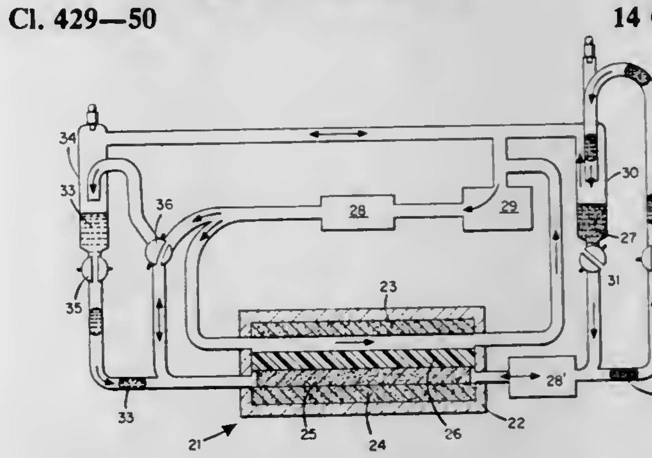

1. A method for improving the performance of current delivering electrochemical systems of the type which utilize a halogen selected from the group consisting of bromine, chlorine, iodine, and mixtures thereof as an electrochemically active agent which reacts electrochemically at a halide electrode and which system includes a metal electrode and an aqueous metal halide electrolyte phase in which halogens are soluble, wherein the improvement comprises using an organic halogen complexing phase which has two components, one of which is an organic solvent which is insoluble in water, the second component being an organic salt which is soluble in the organic solvent, forms complexes with halogens which do not crystallize out of the solvent at any point during halogen addition, and which do not react irreversibly with free halogens, the organic halogen complexing phase remaining insoluble with the aqueous electrolyte phase during charging and discharging of the current delivery system, the organic salt of the halogen complexing phase forming a reversible complex with the halogen to store halogen during charging of the system and to release halogen during discharging of the system, the halogen complexing phase preventing halogens from dissolving in the aqueous phase.

6. The method as set forth in claim 1 wherein said organic salt is a salt selected from the group consisting of:

Ammonium salts having the formula:

-continued

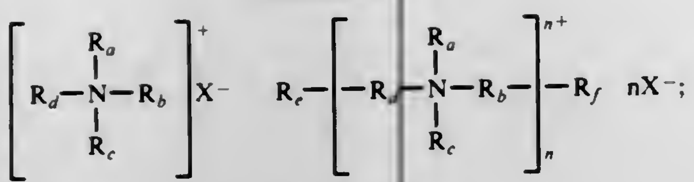

Pyridinium salts having the formula:

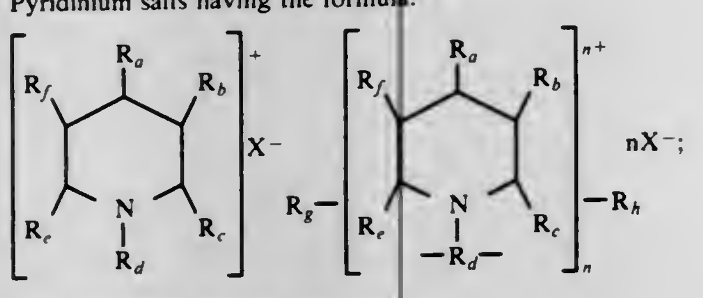

Sulfonium salts having the formula:

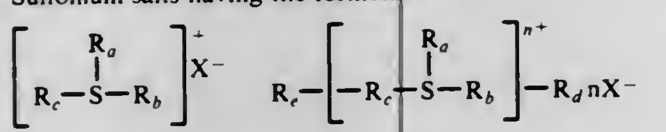

Phosphonium salts having the formula:

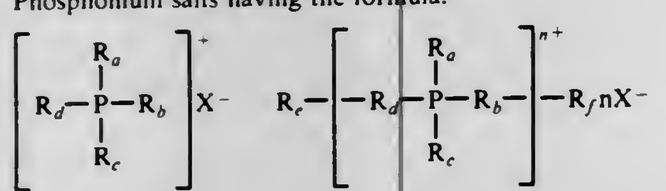

where all R's may be but need not be equal and R's may be hydrogens, alphatic radicals, O-alkyl radicals, functionalized aliphatic or O-alkyl radicals, aryl radicals and/or functionalized aryl radicals.

4,065,602
WICK-AND-POOL ELECTRODES FOR ELECTROCHEMICAL CELL
Michael F. Roche, Downers Grove, Ill.; Suzan M. Faist, Norwood, N.J.; James G. Eberhart, and Laurids E. Ross, both of Naperville, Ill., assignors to The United States of America as represented by the United States Energy Research and Development Administration, Washington, D.C.
Filed Mar. 24, 1977, Ser. No. 780,722
Int. Cl.² H01M *10/39*
U.S. Cl. 429—72 **9 Claims**

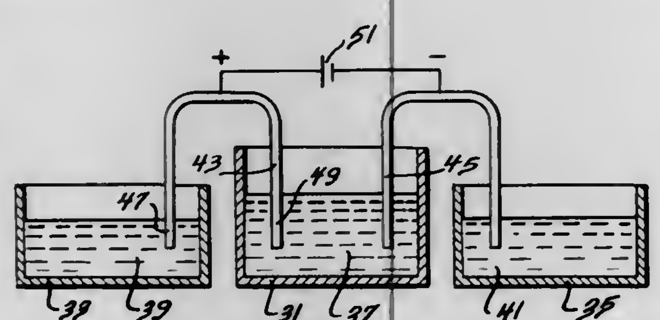

1. A liquid-metal electrode system for providing electrode reactant into an electrode within an electrochemical cell also including a second electrode of opposite polarity, said system comprising a cell structure containing a volume of liquid electrolyte, a reservoir containing said liquid metal outside said volume of liquid electrolyte, a wick having a first portion of its length in contact with said liquid metal within said reservoir, and having a second portion of its length opposite to said first portion submerged within said volume of electrolyte, said wick having sufficiently more attraction for said liquid metal than for said electrolyte to draw said liquid metal into said second portion submerged within said electrolyte.

4,065,603
RACK FOR A STORAGE BATTERY
Jean Coibion, Tresses, France, assignor to Saft-Societe des Accumulateurs Fixes et de Traction, Romainville, France
Filed Feb. 22, 1977, Ser. No. 770,630
Claims priority, application France, Mar. 9, 1976, 76.06705
Int. Cl.² H01M *2/10*
U.S. Cl. 429—99 **10 Claims**

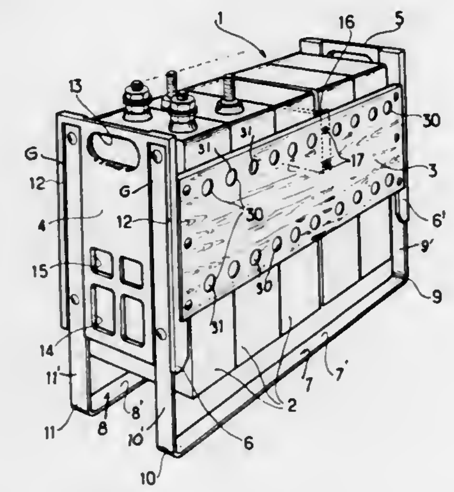

1. A storage cell rack comprising a pair of insulative end plates, at least two insulative longerons interconnecting said end plates, means for fastening the longerons to the end plates, said longerons having storage cell supporting hollows, a stand comprising two metal bars extending parallel to the longerons for supporting an assembly of end plates and longerons, each bar having is ends upturned to constitute uprights, and means fastening the said ends to respective ones of the end plates.

4,065,604
THERMAL CELLS AND ELECTROLYTE COMPOSITION THEREFOR
Glenn F. Zellhoefer, Normal, Ill., assignor to National Union Electric Corporation, Stamford, Conn.
Filed Jan. 27, 1954, Ser. No. 406,543
Int. Cl.² H01M *6/30, 6/18*
U.S. Cl. 429—103 **10 Claims**

PERCENTAGE COMPOSITION BY WEIGHT

POINT NO.	$CaCl_2$	NaCl	KCl
1	68.0	19.5	12.5
2	69.8	29.4	0.8
3	60.7	38.4	0.9
4	59.1	27.7	13.2
5	67.2	26.0	6.8
6	67.7	28.9	3.4
7	65.0	31.5	3.5
8	64.5	28.6	6.9

1. An electrolyte for a fused electrolyte cell consisting essentially of a mixture of 45 to 55 mole percent of $CaCl_2$; 30 to 54 mole percent of NaCl; and 1 to 15 mole percent of KCl, containing proportions of each component substantially as determined by a three system diagram of such conponents; and a depolarizing agent.

4,065,605
THERMAL CELLS
John H. Zauner, Bloomington, Ill., assignor to National Union Electric Corporation, Stamford, Conn.
Filed Jan. 27, 1954, Ser. No. 406,607
Int. Cl.² H01M *6/36*
U.S. Cl. 429—112 **6 Claims**

1. Thermal cell construction comprising a stack of annular bimetal disks separated from each other by dry electrolyte, and a mass of heat source material in the cavity formed by said

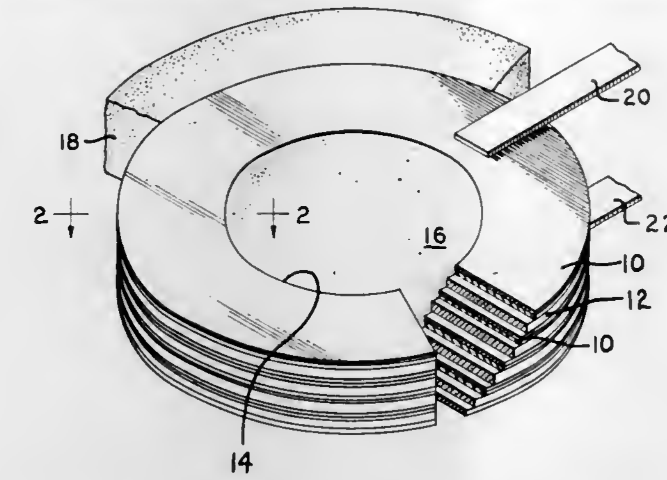

stack and arranged in intimate contact with said bimetal disks, said disks constituting the electrodes of said cell.

4,065,606
ELECTRIC RESERVE BATTERIES
William Ernest Casson, Emsworth, England, assignor to The McMurdo Instrument Company Limited, Croydon, England
Filed June 2, 1976, Ser. No. 691,991
Claims priority, application United Kingdom, June 10, 1975, 24884/75
Int. Cl.² H01M *6/04*
U.S. Cl. 429—198 **4 Claims**

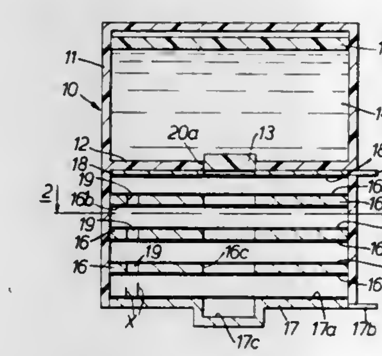

1. As a reserve battery electrolyte, an electrolyte solution selected from the group consisting of perchloric acid, fluoboric acid, fluorsilicic acid and nitric acid, said solution having added thereto as an accretion growth inhibitor, from 0.05 to 5.0 weight percent of a levelling agent selected from the group consisting of gelatine, peptone, phenol, hydroquinone, 1,4 naphthoquinone, 1-naphthol-4-hydroxy anthroquinone, 1-amino-1-naphthol-3-sulphonic acid, eugenol, lignin-sulphuric acids, dimethyl aniline, dibenzene sulphonamide, allantoin, resorcinal, coumarin, 1,4 naphthol sulphonic acid, urea and glycine.

4,065,607
TERPOLYMERS OF MALEIC ANHYDRIDE AND THEIR USE AS SCALE CONTROL AGENTS
Stephen R. Kurowsky, East Lyme, Conn., assignor to Pfizer Inc., New York, N.Y.
Filed Mar. 23, 1977, Ser. No. 780,483
Int. Cl.² C08F *22/00;* **C08C** *19/00;* **C08F** *34/02, 222/04*
U.S. Cl. 526—15 **12 Claims**

1. A polymeric agent comprising a terpolymer, its hydrolyzed form, and the alkali metal, amine and ammonium salts thereof, said terpolymer consisting essentially of 30 to 55 mole percent maleic anhydride, 30 to 65 mole percent acrylamide or methacrylamide and 5 to 15 mole percent third monomer selected from the group consisting of styrene, α-methyl styrene, alkyl acrylate or alkyl methacrylate having from one to eight carbon atoms in the alkyl group and 1-alkene having from four to ten carbon atoms, said terpolymer being characterized by a relative viscosity of about 1.02 to 1.10 in dimethyl sulfoxide at a concentration of 0.5 g. per deciliter, and by solubility of less than 0.10 g. per g. of solution (water) at ambient temperature.

4,065,608
PROCESS FOR THE PREPARATION OF CATIONIC PAPER SIZING AGENTS
Heinz Beck, Duren; Gerhard Gabriel, Nideggen, and Gunter Poppel, Duren-Niederau, all of Germany, assignors to Akzona Incorporated, Asheville, N.C.
Filed Oct. 6, 1976, Ser. No. 730,032
Claims priority, application Germany, Oct. 8, 1975, 2544948
Int. Cl.² C08F *8/32, 8/02*
U.S. Cl. 526—49 **15 Claims**

1. A process for preparing cationic paper sizing agents comprising first reacting in an organic solvent a copolymer of maleic anhydride and an α-olefin containing 10 to 26 carbon atoms, said copolymer having a molar ratio of maleic anhydride to α-olefin of from 0.9:1 to 1.8:1, with from 0.1 to 1.0 mole per mole of anhydride, of a monoprimary/monotertiary alkylene diamine of the formula,

$$(R_1)(R_2)N-(CH_2)_x-NH_2$$

wherein R_1 and R_2 each independently represent alkyl having from 1 to 22 carbon atoms or phenyl, or, when grouped with the tertiary nitrogen atom, represent piperidyl or morpholyl, and x is an integer from 2 to 12; subsequently reacting the copolymer-diamine reaction product with more than 0.2 and less than 1.5 moles, per mole of the originally present anhydride, of a low-molecular weight polyamine, said polyamine containing at least two amino groups which are primary, secondary, or a combination thereof, with the proviso that the total amount of amine reacted be less than 2 moles per mole of originally present anhydride; and converting the resultant product to a salt.

4,065,609
POLYMERIZATION PROCESS
Bruce Albert Edward Willmore, Cockernhoe, England, assignor to Imperial Chemical Industries Limited, London, England
Filed Apr. 1, 1976, Ser. No. 672,603
Claims priority, application United Kingdom, Apr. 17, 1975, 15863/75
Int. Cl.² C08F *2/34, 4/60, 10/00*
U.S. Cl. 526—61 **11 Claims**

1. A process for the production of a solid polymer which comprises:

contacting at least one gaseous mono-α-olefine monomer with a solid polymer of said monomer or monomers, in the presence of a transition metal catalyst,

stirring the solid polymer to effect agitation, and

maintaining the conditions of temperature and pressure of the reaction to be such that the reaction temperature is in the range from $(t_P + 0.1)°$ C up to $(t_P + 5.0)°$ C, and the partial pressure of one of said monomers is P psig, wherein P psig is the saturated vapour pressure of said monomer at a temperature of $t_P°$ C.

4,065,610
TREATMENT OF CONTAMINATED HYDROCARBON FROM OLEFIN POLYMERIZATION
Jan W. De Beukelaar, Amsterdam; Henry Van Zwet, The Hague, and Jacob B. Roest, Amsterdam, all of Netherlands, assignors to Shell Oil Company, Houston, Tex.
Filed Oct. 12, 1976, Ser. No. 731,593
Claims priority, application United Kingdom, Oct. 14, 1975, 41990/75
Int. Cl.² C08F *6/00, 10/00, 10/06*
U.S. Cl. 526—70 **7 Claims**

1. In a process for the polymerization of 1-olefins by contact with a catalyst comprising $TiCl_3$ and an organo aluminum compound, wherein the crude olefin polymer is de-ashed by contact with a titaniumsolubilizing composition and the polymer or polymer-containing slurry, recovered from the deashing step, is washed with a predominantly hydrocarbon liquid to produce clean polymer which is separated from the dirty wash liquid which contains solubilized catalyst residue, and wherein the resulting dirty wash liquid is separately recovered, the improvement which comprises recovering purified hydrocarbon wash liquid components suitable for recycle to the polymerization reaction, by treating the dirty wash liquid in the presence of dissolved monohydric alcohol with a dissolved glydicyl compound which has a boiling temperature higher than that of said wash liquid and recovering by distillation at least one purified hydrocarbon component from the treated wash liquid.

4,065,611
PROCESS FOR THE PRODUCTION OF POLYOLEFINS
Mituji Miyoshi, Kanagawa; Kazuo Matsuura, Kawasaki; Nobuyuki Kuroda, and Shiro Ogawa, both of Yokohama, all of Japan, assignors to Nippon Oil Company Limited, Tokyo, Japan
Continuation of Ser. No. 377,056, July 6, 1973, abandoned. This application Sept. 10, 1976, Ser. No. 722,859
Claims priority, application Japan, July 8, 1972, 47-67907
Int. Cl.² C08F *4/02, 10/02*
U.S. Cl. 526—124 **13 Claims**

1. A process for the production of polyolefins which comprises polymerizing at least one alpha-olefin having 2 to 6 carbon atoms in the presence of a composite catalyst consisting of:

a. a solid catalyst component resulting from contacting magnesium oxide with an organic halide selected from the group consisting of tertiary butylchloride, tertiary butylbromide, and tertiary hexylchloride, in amounts not exceeding 10 millimols per gram of said magnesium oxide in the presence of solvents inert to Ziegler catalysts at 0° - 200° C, admixing said contacted magnesium oxide with a transition metal halide selected from the group consisting of titanium and vanadium halides in amounts of 0.1 to 50 times by weight of said magnesium oxide that are liquid at the following reaction temperature, and reacting said admixture at 50° - 200° C, and

b. an organometal compound selected from the group consisting of organoaluminum compounds and alkylzinc compounds.

4,065,612
PHENOL MODIFIED POLYMERIZATION CATALYST AND POLYMERIZATION PROCESS
Anthony David Hamer, Plainsboro, and Frederick John Karol, Bellemead, both of N.J., assignors to Union Carbide Corporation, New York, N.Y.
Filed Mar. 30, 1976, Ser. No. 671,975
Int. Cl.² C08F *4/02, 10/02*
U.S. Cl. 526—130 **31 Claims**

1. In a process for polymerizing a monomer charge comprising at least a major amount of ethylene by contacting said charge with a catalyst comprising chromate ester deposited on a support comprising silica and treated with strong reducing agent, the improvement which comprises treating said catalyst, prior to said treatment with said reducing agent, with phenol compound, said chromate ester containing one or more groups of the formula

$$CrO_2Y_2$$

wherein the Y's are the same or different and are radicals selected from the group consisting of halogen, —O—R—, —O—Ti—(OR)$_3$,

$$-O-\overset{\displaystyle O}{\overset{\|}{P}}-(OR)_2,$$

and —O—M—R$_3$, and wherein R is a C_1 to C_{14} hydrocarbyl group and M is selected from the group consisting of Si and Sn.

4,065,613
ALTERNATING COPOLYMERS OF ALKYL ACRYLATE/ETHYLENE/BRANCHING AGENTS
Anestis Leonidas Logothetis, Louisville, Ky., assignor to E. I. Du Pont de Nemours and Company, Wilmington, Del.
Filed Mar. 17, 1975, Ser. No. 559,169
The portion of the term of this patent subsequent to Dec. 9, 1992, has been disclaimed.
Int. Cl.² C08F *18/00, 20/00, 222/00, 20/10*
U.S. Cl. 526—292 **3 Claims**

1. An amorphous atactic alternating branched copolymer having a glass transition temperature of less than 0° C obtained by addition polymerization by polymerizing in the presence of a Lewis acid and free radical initiator, said copolymer having repeating units of —A—B— wherein A is the polymerized unit of the ethylenically unsaturated carbon-carbon bond of the group

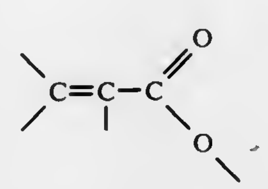

contained in a compound selected from the class consisting of:

1. ethyl acrylate,
2. ethylene glycol diacrylate,
3. maleic acid monoethyl ester, and B is the polymerized unit of the ethylenically unsaturated carbon-carbon bond of ethylene, wherein the total amount of (2) present is 0.05 t 5 mole percent; the amount of (3) present is either none or 1 to 10 mole percent; and the amount of (1) and ethylene present is complemental.

4,065,614
INTERMEDIATE AMIDE PECTINS
Denny B. Nelson, Corona, Calif., assignor to Sunkist Growers, Inc., Sherman Oaks, Calif.
Filed Jan. 13, 1976, Ser. No. 648,733
Int. Cl.² C08B *37/06*
U.S. Cl. 536—2 **21 Claims**

1. A pectin derivative having not more than 39% carboxyl groups, and at least 27% amide groups, with the total of said carboxyl and said amide percentages within the range from 56 to 70%; the balance being methyl ester groups and having an apparent molecular weight in excess of 110,000.

4,065,615
DEOXYAMINOGLYCOSIDE ANTIBIOTIC DERIVATIVES
Satoshi Horii, Sakai; Yukihiko Kameda, Toyonaka, and Nariakira Mizokami, Suita, all of Japan, assignors to Takeda Chemical Industries, Ltd., Osaka, Japan
Filed July 10, 1974, Ser. No. 487,226
Claims priority, application Japan, July 12, 1973, 48-78979
Int. Cl.² C07H *15/22*
U.S. Cl. 536—10 **10 Claims**

1. A compound in which all the amino groups other than the amino group at the 1-position on the deoxystreptamine moiety of an aminoglycoside antibiotic selected from the group consisting of xylostasin, ribostamycin, neomycin-group antibiotic, paromomycin-group antibiotic, kanamycin-group antibiotic, 3'-deoxy and 3',4'-dideoxyderivatives of these antibiotics, gentamicin-group antibiotic and lividomycin-group antibiotic are formylated and the amino group at the 1-position is unsubstituted.

4,065,616
PROCESSES FOR PRODUCTION OF A 1-N-(α-HYDROXY-Φ-AMINO ALKANOYL)-3-DEOXY-5-O-PENTAFURANOSYL NEAMINE AND NEW COMPOUNDS PRODUCED BY THE SAME PROCESSES
Hamao Umezawa; Sumio Umezawa, both of Tokyo; Tsutomu Tsuchiya, Yokohama, and Isamu Watanabe, Higashimurayama, all of Japan, assignors to Zaidan Hojin Biseibutsu Kagaku Kenkyu Kai, Tokyo, Japan
Filed Aug. 2, 1976, Ser. No. 710,949
Claims priority, application Japan, Aug. 15, 1975, 50-98501
Int. Cl.² C07H *15/22*
U.S. Cl. 536—17 **2 Claims**

1. A compound of the formula (I'):

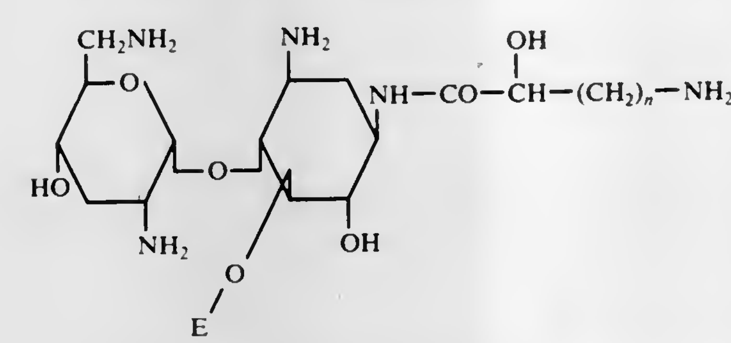

(I')

wherein E is β-D-xylofuranosyl group, α-L-arabinofuranosyl group or 5-amino-5-deoxy-β-D-xylofuranosyl group, and *n* is an integer of 1 or 2, provided that E is β-D-xylofuranosyl group when *n* is 1 and provided that E is α-L-arabinofuranosyl or 5amino-5-deoxy-β-D-xylofuranosyl group when n is 2, or a pharmaceutically acceptable acid-addition salt thereof.

4,065,617
2-(2,2,2,-TRIFLUOROETHYL)-3,3A,4,5,6,7-HEXAHYDRO-2H-PYRAZOLO[4,3-C]PYRIDINES
John Krapcho, Somerset, and Chester F. Turk, Kendall Park, both of N.J., assignors to E. R. Squibb & Sons, Inc., Princeton, N.J.
Filed Feb. 4, 1977, Ser. No. 765,572
Int. Cl.² C07D *471/02, 471/06*
U.S. Cl. 542—450 **14 Claims**

1. A compound having the formula

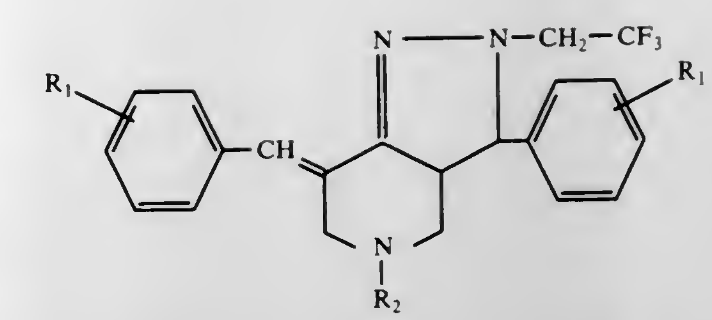

or a pharmaceutically acceptable salt thereof, wherein R_1 is hydrogen, chloro, fluoro, alkyl, alkoxy or trifluoromethyl; and R_2 is hydrogen, alkyl, arylalkyl, hydroxyalkyl or carboximidamide; and wherein the term aryl refers to phenyl or phenyl monosubstituted with a hydrogen, chloro, fluoro, alkyl, alkoxy or trifluoromethyl group and the terms alkyl and alkoxy refer to groups having 1 to 8 carbon atoms.

4,065,618
PROCESS FOR 3-H-3-CEPHEM ESTERS
Wayne Alfred Spitzer, Indianapolis, Ind., assignor to Eli Lilly and Company, Indianapolis, Ind.
Division of Ser. No. 576,818, May 12, 1975, Pat. No. 4,013,651. This application Sept. 3, 1976, Ser. No. 720,179
Int. Cl.² C07D *501/04*
U.S. Cl. 544—16 **4 Claims**

1. The process for preparing a 3-cephem ester of the formula

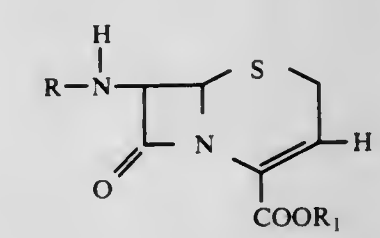

which comprises 1) reacting under anhydrous conditions a compound of the formula

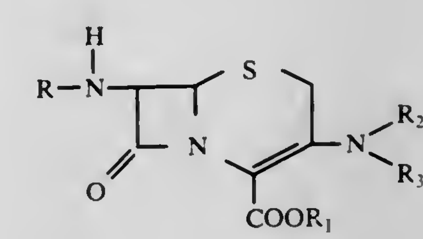

in an inert solvent at a temperature between about 5° and 35° C. with diborane, 2) acidifying the reaction mixture and 3) separating the 3-cephem ester from the acidified reaction mixture; where in the above formulas R is hydrogen or an acyl group

$$R'-\overset{\displaystyle O}{\overset{\|}{C}}-$$

and R' is C_1–C_6 alkyl, C_1–C_3 cyanoalkyl, phenyl, halophenyl, methylphenyl, hydroxyphenyl, nitrophenyl, aminophenyl, or methoxyphenyl; or R' is a group of the formula

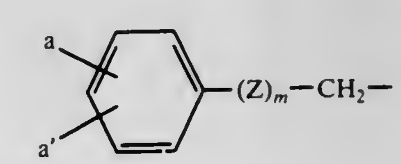

wherein *a* and *a'* are independently hydrogen, C_1–C_4 alkyl, C_1–C_4 alkoxy, halogen, nitro, amino, or carboxy,

Z is O or S, and *m* is O or 1;

or R' is a group of the formula

P—CH—
|
Q

wherein P is thienyl, phenyl or

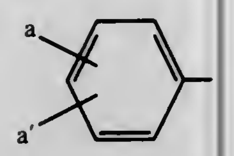

wherein *a* and *a'* are as defined above; Q is hydroxy, amino, carboxy or $—SO_3H$;

or R' is a group of the formula

R''-CH_2—

wherein R'' is thienyl, furyl, 2-oxazyl, 2-thiazyl, or 1-tetrazyl; R_1 is benzyl, 4-nitrobenzyl, 4-methoxybenzyl, diphenylmethyl, t-butyl or 2,2,2-trichloroethyl;

and R_2 and R_3 when taken separately are independently C_1–C_4 alkyl, benzyl or phenethyl, and when taken together with the attached nitrogen are pyrrolidino, piperidino, morpholino, thiomorpholino or a 4-substituted piperazino group of the formula

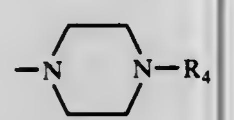

wherein R_4 is C_1–C_4 lower alkyl.

4,065,619

7-(α-SULFOACYLAMIDO)CEPHALOSPORINS

Shiro Morimoto, Kobe; Hiroaki Nomura, Takatsuki; Takeshi Fugono, Kawanishi, and Isao Minami, Osaka, all of Japan, assignors to Takeda Chemical Industries, Ltd., Japan

Continuation of Ser. No. 552,752, Feb. 25, 1975, abandoned, which is a continuation of Ser. No. 272,637, July 17, 1972, abandoned. This application Sept. 2, 1976, Ser. No. 719,704

Claims priority, application Japan, July 17, 1971, 46-53466; Oct. 22, 1971, 46-84130

Int. Cl.² C07D *501/44, 501/46;* **A61K** *31/545*

U.S. Cl. 544—25 **6 Claims**

1. A compound of the formula:

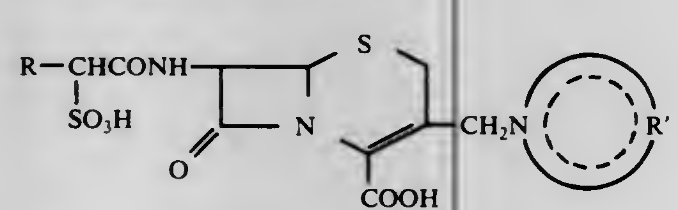

wherein R is phenyl or thienyl, and R' is a group which constitutes together with the adjacent nitrogen atom a pyridinium group, said pyridinium group being substituted by carbamoyl at the 4'-position, or a 4'-methyl-5'-(β-hydroxyethyl)-thiazolium or a pharmaceutically acceptable salt thereof.

4,065,620

3-(SUBSTITUTED) VINYL CEPHALOSPORINS

John Alan Webber, Indianapolis, Ind., assignor to Eli Lilly and Company, Indianapolis, Ind.

Filed June 14, 1971, Ser. No. 153,065

Int. Cl.² C07D *501/18, 501/20*

U.S. Cl. 544—16 **18 Claims**

1. A compound of the formula

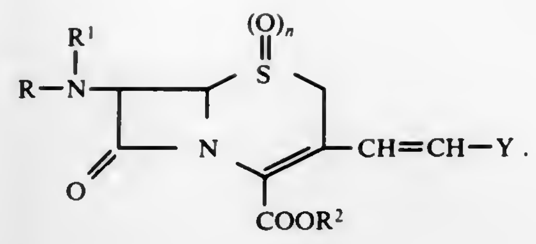

wherein

n is 0 or 1;

R is hydrogen, cyanoacetyl or a group of the formula

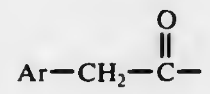

wherein Ar is 2-thienyl, 3-thienyl, 2-furyl, 3-furyl, 2-pyrrolyl, 3-pyrrolyl, phenyl, or nitrophenyl;

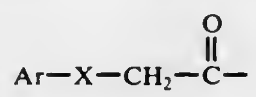

wherein X is oxygen or sulfur and Ar is as defined above;

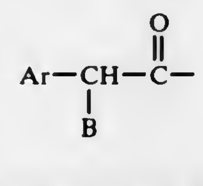

wherein Ar is as defined above and B is —OH, or such —OH group protected by esterification with a C_1–C_6 alkanoic acid; or

B is —COOH, or such —COOH group protected by esterification with a C_1–C_6 alkanol; or B is

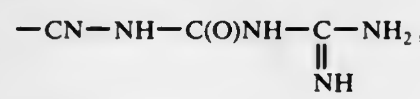

—NH-SO_3H, or —C(O)-NH_2;

R^1 is hydrogen, or

R and R^1 taken together with the nitrogen to which they are bonded denote $—NH_3^+$, a salt group with an acid having a pKa of less than 4, or a cyclic imide group from a C_3 to C_{12} hydrocarbon dicarboxylic acid;

R^2 is hydrogen,

C_4 to C_6-tert-alkyl,

C_5 to C_7-tert-alkenyl,

C_5 to C_7-tert-alkynyl, or

a pharmaceutically acceptable cation; and

Y is —C(O)O$R^3$where R^3 is C_1–C_4 alkyl, —CN, —COOH, —CHO, —X-C_1 to C_4alkyl wherein X is oxygen or sulfur, —C(O)-NH_2, $—NO_2$, —S(O)-C_1C_4alkyl, —S(O)$_2C_1$-C_4 alkyl, or Cl, Br, or trifluoromethyl.

4,065,621

PROCESS FOR 3-ALKYL AND 3-PHENYL CEPHALOSPORINS

Wayne Alfred Spitzer, Indianapolis, Ind., assignor to Eli Lilly and Company, Indianapolis, Ind.

Division of Ser. No. 576,818, May 12, 1975, Pat. No. 4,013,651. This application Sept. 3, 1976, Ser. No. 720,180

Int. Cl.² C07D *501/04*

U.S. Cl. 544—30 **5 Claims**

1. The process for preparing a 3-alkyl or 3-phenyl-3-cephem ester of the formula

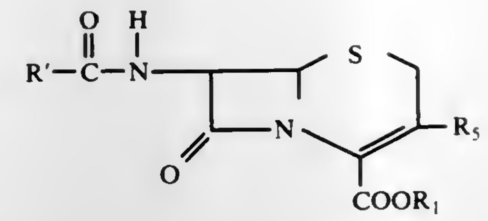

which comprises (1) reacting a compound of the formula

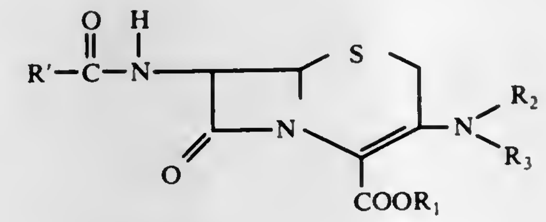

in an inert ether solvent at a temperature between about −80° and 5° C. with the Grignard reagent

$BrMgR_5$

wherein R_5 is C_1-C_4 alkyl, or phenyl, (2) acidifying the reaction mixture and (3) separating the 3-alkyl- or 3-phenyl-3-cephem ester from the reaction mixture; where in the above formulas R' is C_1-C_6 alkyl, C_1-C_3 cyanoalkyl, phenyl, halophenyl, methylphenyl, hydroxyphenyl, nitrophenyl, aminophenyl, or methoxyphenyl; or R' is a group of the formula

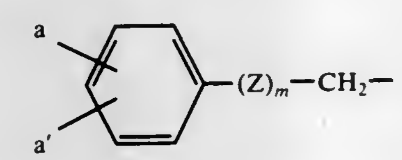

wherein *a* and *a'* are independently hydrogen, C_1-C_4 alkyl, C_1-C_4 alkoxy, halogen, nitro, amino, or carboxy, Z is 0 or S, and *m* is 0 or 1; or R' is a group of the formula

P—CH—
|
Q

wherein P is thienyl, phenyl or

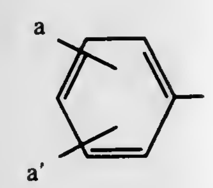

wherein *a* and *a'* are as defined above; Q is hydroxy, amino, carboxy or $—SO_3H$; or R' is a group of the formula

R''—CH_2—

wherein R'' is thienyl, furyl, 2-oxazolyl, 2-thiazdyl, or 1-tetrazdyl; R_1 is benzyl, 4-nitrobenzyl, 4-methoxybenzyl, diphenylmethyl, t-butyl or 2,2,2-trichloroethyl; and $R_2$and R_3 when taken separately are independently C_1-C_4alkyl, benzyl or phenethyl, and when taken together with the attached nitrogen are pyrrolidino, piperidino, morpholino, thiomorpholino or a 4-substituted piperazino group of the formula

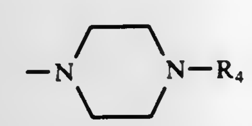

wherein R_4 is C_1C_4 lower alkyl.

4,065,622

O-2-ISOCEPHEM-4-CARBOXYLIC ACID DERIVATIVES AS ANTIBACTERIAL AGENTS

Donald E. Horning, Candiac; Leeson R. Morris, St. Lambert, and James L. Douglas, Montreal, all of Canada, assignors to Bristol-Myers Company, New York, N.Y.

Division of Ser. No. 598,461, July 23, 1975, Pat. No. 4,013,648. This application Sept. 23, 1976, Ser. No. 726,072

Int. Cl.² C07D *265/34*

U.S. Cl. 544—105 **3 Claims**

1. A compound having the formula

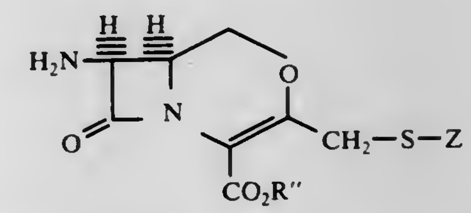

wherein R'' is hydrogen or an easily cleavable ester carboxyl-protecting group selected from the group consisting of benzhydryl, benzyl, p-nitrobenzyl, trichloroethyl, trimethylsilyl, phenacyl, acetonyl, (lower)alkyl, triphenylmethyl, methoxymethyl, indanyl, phthalidyl, pivaloyloxymethyl and acetoxymethyl and Z represents a radical of the formula

aryl—(ALK)$_m$—

in which aryl is phenyl or naphthyl, ALK represents a straight or branched chain alkylene radical and *m* is 0 or an integer of 1 to 4, said Z radical being optionally substituted by one or more substituents selected from halo, C_1-C_4 alkyl, C_1-C_4 alkoxy, cyano, carboxyl, amino, nitro, C_3-C_4 cycloalkyl, C_2-C_4 alkenyl, trifluoromethyl, hydroxy, hydroxymethyl, C_1-C_4 alkylthio, C_1-C_4 alkylamino, di(C_1-C_4 alkyl)amino, mercapto, phenyl, benzyl, alkoxyalkyl of up to 4 carbons or $—(CH_2)_n$. COOH in which *n* is an integer of 1 to 4, or a pharmaceutically acceptable salt thereof.

4,065,623

O-2-ISOCEPHEM-4-CARBOXYLIC ACID DERIVATIVES AS ANTIBACTERIAL AGENTS

Bernard R. Belleau, Westmont, Canada; Terrence W. Doyle, Fayetteville, N.Y.; Bing Yu Luh, and Terry T. Conway, both of Brossard, Canada, assignors to Bristol-Myers Company, New York, N.Y.

Division of Ser. No. 538,271, Jan. 2, 1975, Pat. No. 4,012,383. This application Aug. 19, 1976, Ser. No. 715,944

Int. Cl.² C07D *265/34*

U.S. Cl. 544—105 **12 Claims**

1. A compound of the formula

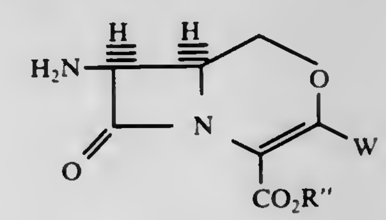

wherein W is benzyl or phenethyl and R'' is hydrogen or an easily cleavable ester carboxyl-protecting group selected from the group consisting of benzhydryl, benzyl, p-nitrobenzyl, p-methoxybenzyl, trichloroethyl, trimethylsilyl, phenacyl, acetonyl, (lower)alkyl, triphenylmethyl, methoxymethyl, indanyl, phthalidyl, pivaloyloxymethyl and acetoxymethyl, or a pharmaceutically acceptable salt thereof.

4,065,624

RADIATION CURABLE COATING COMPOSITION

Paul J. Prucnal, Monroeville, and Robert DeMajistre, Pittsburgh, both of Pa., assignors to PPG Industries, Inc., Pittsburgh, Pa.

Filed Jan. 27, 1976, Ser. No. 652,687

Int. Cl.² C08F *2/50, 4/00, 20/22, 20/28*

U.S. Cl. 428—522 **16 Claims**

1. A radiation curable coating composition having a binder comprising resin represented by the formula:

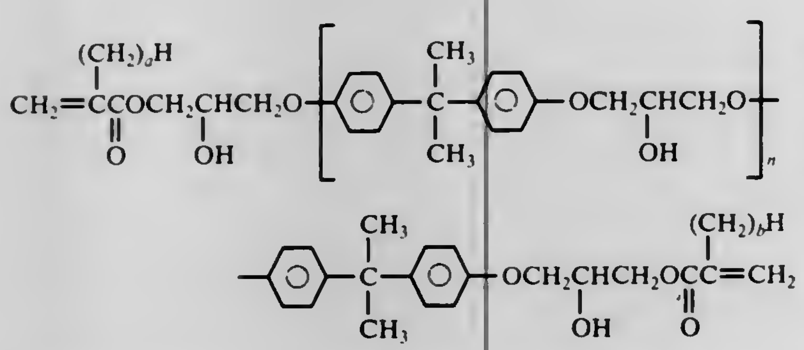

dissolved in a reactive solvent represented by the formula:

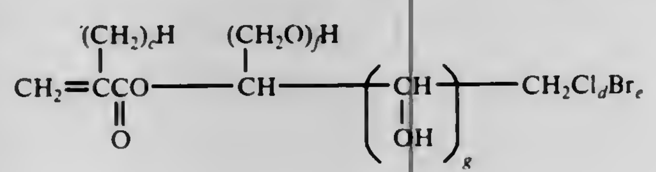

wherein

a. the average value of n is in the range of from 0 to 3;
b. the average values of a, b and c are each independently in the range of from 0 to 1;
c. the average value of d is in the range of from 0 to 1;
d. the average value of e is in the range of from 0 to 1;
e. $d + e = 1$;
f. the average value of f is in the range of from 0 to 1;
g. the average value of g is in the range of from 0 to 1; and
h. $f + g = 1$.

4,065,625

LEAD FRAME FOR A SEMICONDUCTOR DEVICE

Naoji Iwai, Tokyo; Takashi Uchida, Yokohama, and Takemi Abe, Kawasaki, all of Japan, assignors to Tokyo Shibaura Electric Co., Ltd., Kawasaki, Japan

Filed Oct. 30, 1975, Ser. No. 627,258

Claims priority, application Japan, Oct. 31, 1974, 49-124932

Int. Cl.² B23P *3/20;* **H01L** *23/48*

U.S. Cl. 428—596 **3 Claims**

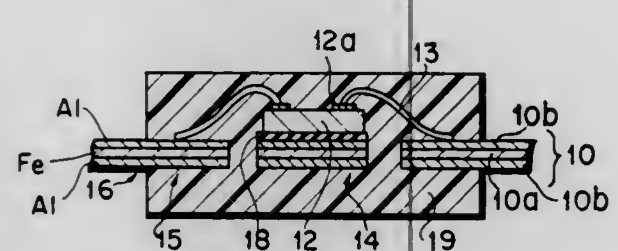

1. A lead frame for a semiconductor device comprising:

a. a semiconductor chip-mounting portion;
b. inner lead portions which are to be connected to the electrode of the semiconductor chip;
c. outer lead portions connected to the inner lead portions; and
d. connection portions which couple said chip mounting portion, outer and inner lead portions together; wherein said chip-mounting portion, inner lead portions and outer lead portions are each formed of an iron core sheet, both sides of which are clad with layers of an aluminum alloy containing 0.5% to 1.5% by weight of silicon and 0.3 to 0.6% by weight of iron, wherein said layers are from 2 – 20 microns thick.

4,065,626

GOLD-APPEARING FILMS OF COPPER, NICKEL AND COPPER OXIDE LAYERS

Helmut Franz, Pittsburgh, Pa., assignor to PPG Industries, Inc., Pittsburgh, Pa.

Continuation-in-part of Ser. No. 470,768, May 17, 1974, Pat. No. 3,944,440, which is a division of Ser. No. 252,803, May 12, 1972, Pat. No. 3,846,152. This application Nov. 4, 1975, Ser. No. 628,704

Int. Cl.² B05D *3/02, 3/10, 5/06;* **G02B** *27/10*

U.S. Cl. 428—629 **6 Claims**

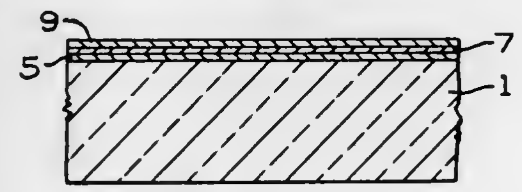

1. In a method of making a coated article comprising the steps of:

preparing a surface of a substrate to be coated and depositing a copper film onto the prepared surface of the substrate by contacting it with a copper plating solution comprising a copper salt and a reducing agent, the improvement which comprises

a. adding to said copper plating solution an amount of a triazole sufficient to render the film brown in appearance;
b. depositing a nickel film onto the brown copper film by contacting it with a nickel plating solution comprising a nickel salt and a reducing agent;
c. depositing a copper film onto the nickel film by contacting it with a copper plating solution comprising a copper salt and a reducing agent;
d. contacting the copper film which has been deposited onto the nickel film with a surfactant which is capable of rendering the surface hydrophobic upon drying; and
e. heating the substrate and its three films to a temperature of at least about 300° F. (150° C.) in an oxidizing environment for a sufficient time to oxidize the copper film deposited onto the nickel film.

6. A transparent article of manufacture for the selective reflection of radiation over an extended spectral range comprising in combination:

a. a clear glass substrate
b. at least three coating layers affixed to a surface of said clear glass substrate:
   1. a brown copper layer consisting essentially of copper deposited onto the glass in the presence of a triazole;
   2. a copper oxide layer made by depositing copper and then oxidizing it; and
   3. a nickel layer sandwiched between the brown copper layer and the copper oxide layer wherein the layers have respective thicknesses sufficient to provide the article with a luminous transmittance of from 12 to 22 percent a transmittance dominant wavelength of from 575 to 580 nanometers, a transmittance excitation purity of from 44 to 54 percent, and, from the glass side, a luminous reflectance of from 35 to 55 percent, a reflective dominant wavelength of from 570 to 585 nanometers and a reflective excitation purity of from 12 to 35 percent.

4,065,627

HIGH MOLECULAR WEIGHT RADIATION CURABLE RESINS

Stuart A. Harrison, Minneapolis, Minn., assignor to General Mills Chemicals, Inc., Minneapolis, Minn.

Filed Sept. 27, 1976, Ser. No. 726,730

Int. Cl.² C07C *125/06*

U.S. Cl. 560—26 **2 Claims**

1. The diisocyanate derivative of the formula:

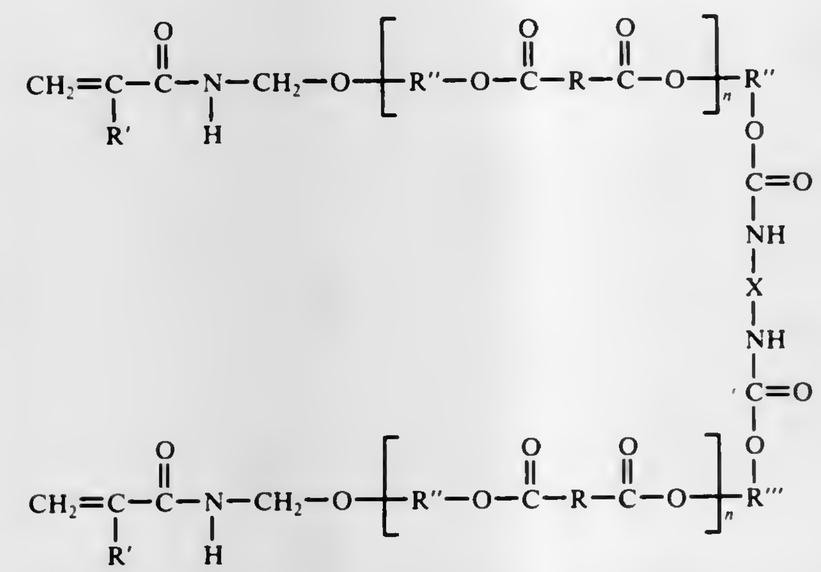

wherein X is an aromatic hydrocarbon, cycloaliphatic hydrocarbon or aliphatic hydrocarbon group containing 4 to 38 carbon atoms, R is an aliphatic hydrocarbon or aromatic hydrocarbon group containing four to eight carbon atoms, R′ is hydrogen or a methyl group, R″ is an aliphatic hydrocarbon group containing two to eight carbon atoms with the proviso that the aliphatic hydrocarbon group can contain ether linkages, R‴ is an aliphatic hydrocarbon group containing two to eight carbon atoms with the priviso that the aliphatic hydrocarbon group can contain ether linkages, R″ and R‴ when containing ether linkages have the formulae (—R_a—O—R_b)—, —(R_a—O—R_b—O—R_c)— or —(R_a—O—R_b—O—R_c—O—R_d)— wherein R_a, R_b, R_c, and R_d are alkylene groups containing in total from four to eight carbon atoms, and n is an integer from two to five.

4,065,628

17-PHENYL-18,19,20-TRINOR-CIS-4,5-DIDEHYDRO-PGE, COMPOUNDS

Barney J. Magerlein, Portage, Mich., assignor to The Upjohn Company, Kalamazoo, Mich.

Division of Ser. No. 580,747, May 27, 1975, Pat. No. 4,032,561. This application Nov. 12, 1976, Ser. No. 741,245

Int. Cl.² C07C *69/76*

U.S. Cl. 560—53 **7 Claims**

1. An optically active compound of the formula:

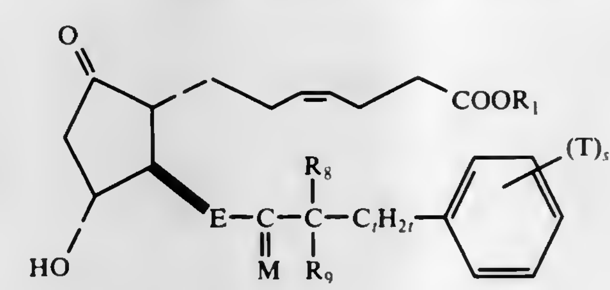

or a racemic form of that compound and the enantiomer thereof,

wherein R_1 is hydrogen or alkyl of one to 12 carbon atoms, inclusive, cycloalkyl of 3 to 10 carbon atoms, inclusive, aralkyl of 7 to 12 carbon atoms, inclusive, phenyl, or phenyl substituted with one, 2, or 3 chloro or alkyl of one to 4 carbon atoms, inclusive;

wherein M is

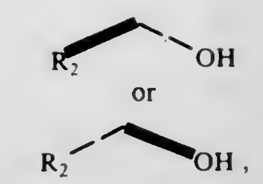

wherein R_2 is hydrogen, methyl, or ethyl;
wherein E is trans—CH=CH— or —CH_2CH_2—;
wherein R_8 is hydrogen and R_9 is hydrogen, methyl, or fluoro, or wherein R_8 and R_9 are both methyl or both fluoro, with the proviso that neither of R_8 and R_9 is methyl when R_2 is methyl or ethyl;
wherein C_tH_{2t} represents a valence bond or alkylene of one to 9 carbon atoms, inclusive, with one to 6 carbon atoms, inclusive, between —CR_8R_9— and the ring; and
wherein T is alkyl of one to 4 carbon atoms, inclusive, fluoro, chloro, trifluoromethyl, or —OR_3, wherein R_3 is alkyl of one to 4 carbon atoms, inclusive and wherein s is zero, one, 2, or 3 with the proviso that not more than 2 T's are other than alkyl; including alkanoates of 2 to 8 carbon atoms, inclusive, and pharmacologically acceptable salts thereof when R_1 is hydrogen.

4,065,629

17-PHENYL-18,19,20-TRINOR-CIS-4,5-DIDEHYDRO-PGA₁ COMPOUNDS

Barney J. Magerlein, Portage, Mich., assignor to The Upjohn Company, Kalamazoo, Mich.

Division of Ser. No. 580,747, May 27, 1975, Pat. No. 4,032,561. This application Nov. 12, 1976, Ser. No. 741,244

Int. Cl.² C07C *69/76*

U.S. Cl. 560—5 B **7 Claims**

1. An optically active compound of the formula:

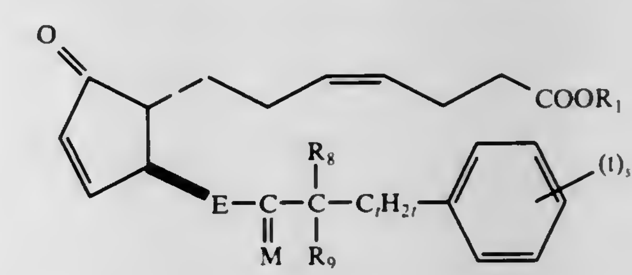

or a racemic form of that compound and the enantiomer thereof,

wherein R_1 is hydrogen or alkyl of one to 12 carbon atoms, inclusive, cycloalkyl of 3 to 10 carbon atoms, inclusive, aralkyl of 7 to 12 carbon atoms, inclusive, phenyl, or phenyl substituted with one, 2, or 3 chloro or alkyl of one to 4 carbon atoms, inclusive;

wherein M is

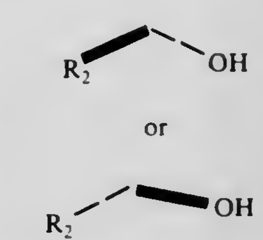

wherein R_2 is hydrogen, methyl, or ethyl;
wherein E is trans—CH=CH— or —CH_2CH_2—;
wherein R_8 is hydrogen and R_9 is hydrogen, methyl, or fluoro, or wheren R_8 and R_9 are both methyl or both fluoro, with the proviso that neither of R_8 and R_9 is methyl when R_2 is methyl or ethyl;
wherein C_tH_{2t} represents a valence bond or alkylene of one to 9 carbon atoms, inclusive, with one to 6 carbon atoms, inclusive, between —CR_8R_9— and the ring; and
wherein T is alkyl of one to 4 carbon atoms, inclusive, fluoro, chloro, trifluoromethyl, or —OR_3, wherein R_3 is

alkyl of one to 4 carbon atoms, inclusive and wherein s is zero, one, 2, or 3 with the proviso that not more than 2 T's are other than alkyl; including alkanoates of 2 to 8 carbon atoms, inclusive, and pharmacologically acceptable salts thereof when R_1 is hydrogen.

4,065,630

POLYOXYALKYLENE FLUOROALKYLTRIMELLITATES

Stanley Robert Sandler, Springfield, Pa., assignor to Pennwalt Corporation

Division of Ser. No. 596,779, July 17, 1975, Pat. No. 3,994,951. This application Sept. 10, 1976, Ser. No. 722,179

Int. Cl.² C07C *69/76, 101/42, 125/06*

U.S. Cl. 560—26 **12 Claims**

1. A compound of the formula

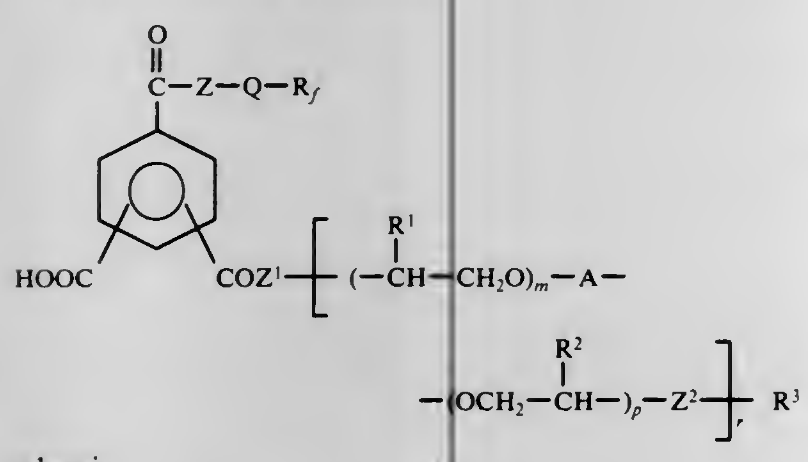

wherein:

a. the ring is 1, 3, 4 tri-substituted

b. Z is NR, Z^1 is O and Z^2 is selected from O, S, or NR where R is H or an alkyl of 1 to 4 carbon atoms,

c. Q is selected from $-(CH_2-)_{1-10}$,

d. R^1 and R^2 are moieties independently selected from hydrogen or an alkyl having 1 to 4 carbon atoms,

e. m and p are independent integers from 0 to 30 describing repeating units of polyoxyalkylene groups that form a chain with at least one polyoxyalkylene chain of at least three repeating units being present,

f. R^1 and R^2 are one or more of said moieties within the repeating units m and p,

g. R_f is selected from the group consisting of a linear or branched perfluoroalkyl a linear or branched monochloroperfluoroalkyl, ora linear or branched perfluoroisoalkoxyalkyl wherein each member of the group has 3 to 20 carbon atoms,

h. r is an integer from 1 to 10,

i. A is a linking group selected from the group consisting of the acyl segment of alkanoic or mono or dicyclic aromatic polycarboxylic acids, alkanoic or mono or dicyclic aromatic anhydrides or alkanoic or mono or dicyclic aromatic polycarbamates, linear alkylene of 2 to 12 carbon atoms or a cyclic alkylene of 5–8 carbon atoms or a branched alkylene of 3–12 carbon atoms, and

j. R^3 is selected from H or an alkyl of 1 to 20 carbon atoms.

4,065,631

17-PHENYL-18,19,20-TRINOR-CIS-4,5-DIDEHYDRO-PGF$_{1\beta}$ COMPOUNDS

Barney J. Magerlein, Portage, Mich., assignor to The Upjohn Company, Kalamazoo, Mich.

Division of Ser. No. 580,747, May 27, 1975, Pat. No. 4,032,561. This application Nov. 12, 1976, Ser. No. 741,246

Int. Cl.² C07C *69/76*

U.S. Cl. 560—55 **7 Claims**

1. An optically active compound of the formula:

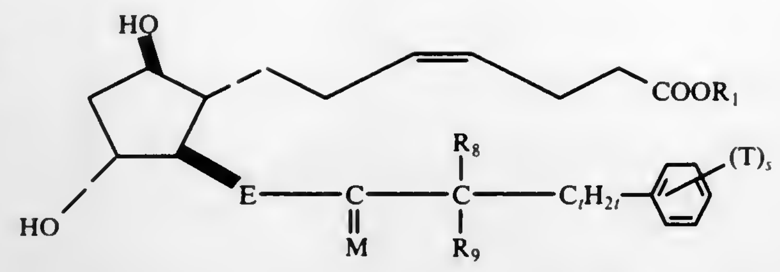

or a racemic form of that compound and the enantiomer thereof,

wherein R_1 is hydrogen or alkyl of one to 12 carbon atoms, inclusive, cycloalkyl of 3 to 10 carbon atoms, inclusive, aralkyl of 7 to 12 carbon atoms, inclusive, phenyl, or phenyl substituted with one, 2, or 3 chloro or alkyl of one to 4 carbon atoms, inclusive;

wherein M is

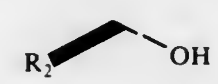

or

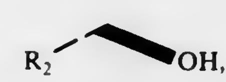

wherein R_2 is hydrogen, methyl, or ethyl;

wherein E is trans—CH=CH— or —CH_2CH_2—;

wherein R_8 is hydrogen and R_9 is hydrogen, methyl, or fluoro, or wherein R_8 and R_9 are both methyl or both fluoro, with the proviso that neither of R_8 and R_9 is methyl when R_2 is methyl or ethyl;

wherein C_tH_{2t} represents a valence bond or alkylene of one to 9 carbon atoms, inclusive, with one to 6 carbon atoms, inclusive, between —CR_8R_9— and the ring; and

wherein T is alkyl of one to 4 carbon atoms, inclusive, fluoro, chloro, trifluoromethyl, or —OR_3, wherein R_3 is alkyl of one to 4 carbon atoms, inclusive and wherein s is zero, one, 2, or 3 with the proviso that not more than 2 T's are other than alkyl; including alkanoates of 2 to 8 carbon atoms, inclusive, and pharmacologically acceptable salts thereof when R_1 is hydrogen.

4,065,632

16-PHENOXY AND PHENYLTHIO PROSTAGLANDIN DERIVATIVES

Masaki Hayashi; Seiji Kori; Hajimu Miyake, and Takanori Okada, all of Osaka, Japan, assignors to Ono Pharmaceutical Company, Osaka, Japan

Filed Aug. 12, 1976, Ser. No. 713,941

Claims priority, application United Kingdom, Aug. 20, 1975, 34688/75; Oct. 22, 1975, 43464/75

Int. Cl.² C07C *69/76*

U.S. Cl. 560—55 **9 Claims**

1. A compound of the formula

VII

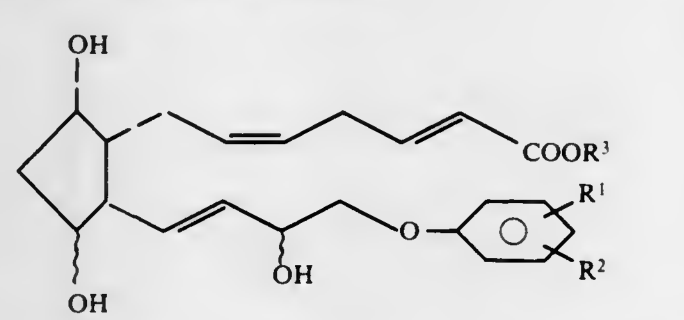

wherein R^1 and R^2, which may be the same or different, each represent a hydrogen or halogen atom, a trifluoromethyl group, or a straight- or branched-chain alkyl or alkoxy group containing from 1 to 4 carbon atoms, R^3 represents a hydrogen

atom or a straight- or branched-chain alkyl group containing from 1 to 12 carbon atoms and the double bonds depicted in positions C_{2-3}, C_{5-6} and C_{13-14} are trans, cis and trans respectively, the cyclodextrin clathrates thereof and non-toxic salts thereof.

4,065,633

2,2-DIFLUORO-13,14-DIHYDRO-PGA$_1$ ANALOGS

Udo F. Axen, Plainwell, Mich., assignor to The Upjohn Company, Kalamazoo, Mich.

Division of Ser. No. 552,708, Feb. 24, 1975, Pat. No. 4,001,300. This application Sept. 17, 1976, Ser. No. 724,155

Int. Cl.² C07C *177/00*

U.S. Cl. 560—121 **18 Claims**

1. A compound of the formula

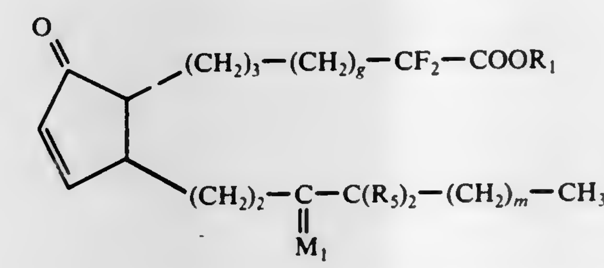

or a mixture comprising that compound and the enantiomer thereof,

wherein g is 2 to 4, inclusive;

wherein M_1 is

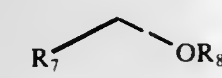

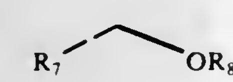

wherein R_7 and R_8 are hydrogen or methyl, with the proviso that one of R_7 or R_8 is methyl only when the other is hydrogen;

wherein m is 2 to 4, inclusive;

wherein R_1 is hydrogen, alkyl of one to 12 carbon atoms, inclusive, cycloalkyl of 3 to 10 carbon atoms, inclusive, aralkyl of 7 to 12 carbon atoms, inclusive, phenyl, phenyl substituted with one, 2, or 3 chloro, alkyl of one to 4 carbon atoms, inclusive, or a pharmacologically acceptable cation,

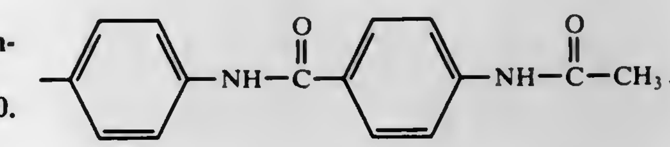

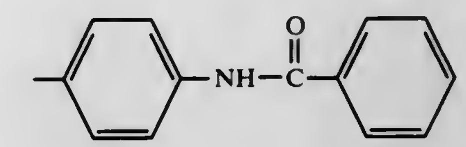

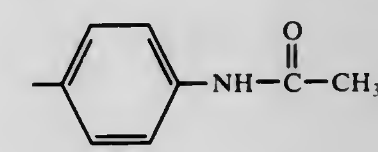

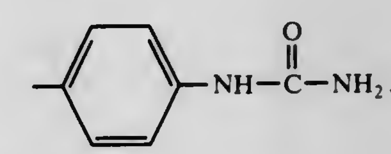

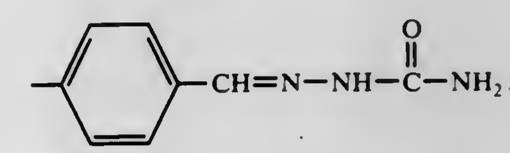 or

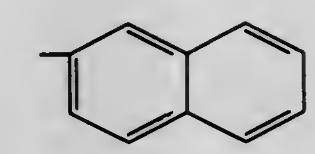

wherein

R_5 is hydrogen, methyl, or fluoro with the proviso that R_5 is fluoro only when R_7 and R_8 are both hydrogen, and with the proviso that R_5 is hydrogen only when either one of R_7 and R_8 is methyl.

4,065,634

SKULL FURNACE FOR MELTING HIGHLY REACTIVE METALS UNDER VACUUM OR NEUTRAL ATMOSPHERE

Semen Moiseevich Beizerov, ulitsa B. Akademicheskaya, 73, korpus 2, kv. 72; Felix Petrovich Vyboischikov, ulitsa Studencheskaya, 38, kv. 31, both of Moscow; Vladimir Viktorovich Bloshenko, ulitsa Severnaya, 36, kv. 6, Odintsovo Moskovskoi oblasti, and Jury Mikhailovich Syaskin, ulitsa Lobnenskaya, 9a, kv. 41, Moscow, all of U.S.S.R.

Filed Feb. 23, 1976, Ser. No. 660,461
Int. Cl.[2] F27D *7/06, 9/00*
U.S. Cl. 13—10 **6 Claims**

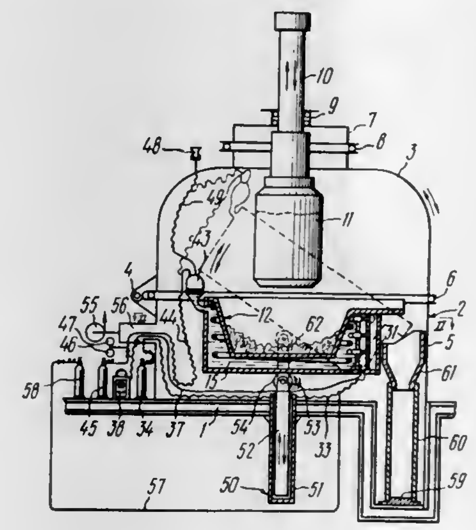

1. A skull furnace for melting highly reactive metals under vacuum or in a neutral atmosphere provided by a neutral gas source, comprising: a support frame; a body of said furnace rigidly mounted on said frame, and said body being horizontally split so as to form a lower portion and an upwardly tiltable crown hinged at one side for opening and closing said furnace; a movable electrode holder secured to said crown in a substantially vertical position so as to be reciprocably movable back and forth from an upper idle position to a lower working position; a tiltable crucible having an inner body and an outer housing located below said electrode holder in the body of said furnace and having a cavity therebetween for a liquid metal cooling agent, said cavity being entirely confined between the body and housing of said crucible to provide, when the furnace is in the working position, for the free convective motion of said liquid metal cooling agent for cooling the body of said crucible; an expansion reservoir filled with a neutral gas and communicating with said cavity for receiving the excess of said cooling agent when it expands during the melting process; a safety device mounted outside said body of said furnace for relieving the excess pressure from said expansion reservoir; a tubular heat exchanger placed in said cavity for the liquid metal cooling agent, the ends of which are connected to cooling water collectors; pipes rigidly connected with said cooling water collectors, extending along the sides of said crucible, and hermetically passing through the walls of said body of the furnace generally below said crown, and being supported so as to allow the tilting of said crucible for pouring out the molten metal and said pipes are connected to respective flexible water inlet and outlet pipe lines.

4,065,635

ELECTRICAL CABLES INSULATED WITH EXTRACTION RESISTANT STABILIZED MATERIAL

Kornel D. Kiss, Yonkers, N.Y., assignor to Dart Industries, Inc., Los Angeles, Calif.

Continuation of Ser. No. 390,834, Aug. 23, 1973, abandoned. This application Dec. 16, 1975, Ser. No. 641,313
Int. Cl.[2] H01B *7/28*
U.S. Cl. 174—23 R **3 Claims**

1. In an outer-jacketed electrical cable suitable for use in underground installations and comprising a plurality of metal wires individually encased in an insulating covering having an ethylene-propylene copolymer resin base containing a minor addition of protective stabilizer with said insulating covering being immersed in a high viscosity liquid filler compound based upon petroleum fractions or polyethylene wax, the improvement wherein said protective stabilizer consists essentially of between about 2500 and about 20,000 parts of disubstituted hydrazine chosen from N,N[1]-bis-β-(3,5-di-t-butyl-4-hydroxyphenyl) propionyl-hydrazine and N-stearoyl, N[1]-β-(3,5-di-t-butyl-4-hydroxyphenyl) propionyl-hydrazine per million parts by weight of said ethylene-propylene copolymer.

4,065,636

HERMETIC ENCLOSURE FOR ELECTRONIC COMPONENT

Andrew Herczog, Painted Post, N.Y., assignor to Corning Glass Works, Corning, N.Y.

Division of Ser. No. 454,289, March 25, 1974, Pat. No. 3,918,147. This application Apr. 18, 1975, Ser. No. 569,186
Int. Cl.[2] H01G *9/10*
U.S. Cl. 174—52 S **6 Claims**

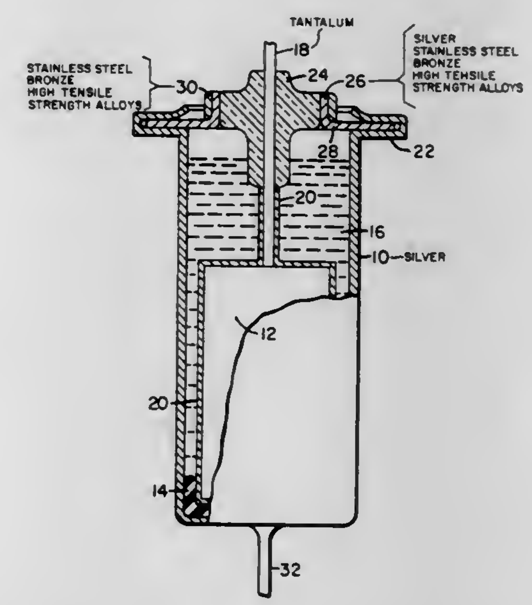

1. An enclosure comprising

a silver container open at one end, said container having a tubular wall portion and a unitary outwardly protruding flange at said open end, said unitary outwardly protruding flange having a U-shaped cross-section and having two substantially parallel walls which are in a plane substantially perpendicular to said wall portion,

an electrical component having a metallic lead extending from one end thereof, said component being disposed within said container,

a glass bead sealed to said lead along its length intermediate the ends thereof, and

a metallic collar having a temperature coefficient of expansion greater than said glass bead fitted about said glass bead so as to place said glass bead in compression thereby effecting a compression seal between said collar and said glass bead, said metallic collar having a unitary outwardly protruding flange in a plane substantially perpendicular to said collar and disposed between and in contact with said two walls of said unitary outwardly protruding flange of said container, said unitary outwardly protruding flange of said collar being hermetically sealed to the unitary outwardly protruding flange of said container.

4,065,637
ELECTRICAL CONNECTOR
Kenneth C. Allison, 1546 S. Shore Drive, Crystal Lake, Ill. 60014
Continuation-in-part of Ser. No. 393,601, Aug. 31, 1973, abandoned. This application July 27, 1976, Ser. No. 709,171
Int. Cl.² H01R *11/08, 11/20*
U.S. Cl. 174—87 **3 Claims**

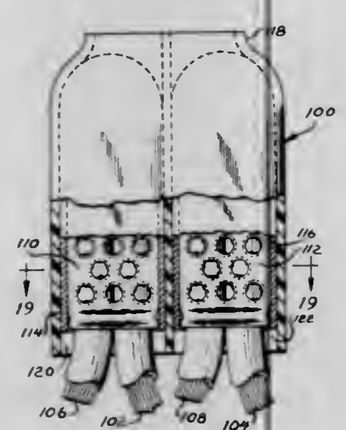

1. An electrical connector particularly adapted for mechanically holding and electrically connecting insulated ends of insulated wires and being particularly adapted for assembly in an automatic assembling machine, including: an elongated conductive resilient penetrator tube having a cylindrical body, having a pair of opposed sides, formed of a single thin sheet folded on itself, with opposed edges in abutting juxtaposition, an outwardly flared annular lip formed integral with one end of the body, said annular lip defining a mouth for said end of the body to receive insulated ends of insulated electrical wire, an annular groove in the body circumscribing said body at the one end adjacent to the lip to provide a convenient means for handling the tube in an automatic assembling machine, a plurality of penetrator locks formed integral with each of opposite sides of the body, each of said penetrator locks on one of the sides of the body extending inwardly of the body toward the opposite side of the body, each of said penetrator locks including four relatively thin penetrator prongs for penetration through insulating material on a wire and into engagement with a conductive portion of the wire to provide electrical connection thereto, each of the penetrator locks including as one of the plurality of penetrator prongs a resilient holding prong being perpendicular to its respective portion of the side of the body and having a length greater than the other penetrator prongs, said holding prong being positioned adjacent to the lip relative to the other penetrator prongs of the respective penetrator lock, each of the holding prongs is spaced from adjacent groups of the respective penetrator lock a greater angular distance than the angular distance between the other prongs of the respective penetrator lock, each of the holding prongs having a rounded side adjacent to the lip and being resiliently displaceable from the perpendicular to facilitate insertion of the insulated wires into the tube but holding the wire away from the other penetrator prongs during insertion while the wire rides into the tube of the respective rounded sides of the holding prongs whereby the holding prong holds the insulated wire away from the penetrator prongs while the wire is being inserted into the tube and crimping of the tube forces the holding prong to enter the insulating material of the wire substantially perpendicular to the wire and to force the penentrator prongs through the insulating material into contact with a conductive portion of the wire; a permanently deformable electrically-conductive tubular sheath mateably and slideably receiving said conductive penetrator tube, said sheath having one end open, said opening of the sheath being symmetrical with the outer periphery of the outwardly flared annular lip; and an insulator tube surrounding the deformable sheath, whereby application of sufficient force to opposite sides of the insulating tube deforms the deformable sheath and the penetrator tube to force penetrator prongs through the insulating material of a pair of insulated ends of insulated electrical wires positioned in the penetrator tube and into electrical contact with the electrical wires, the permanently deformable sheath holds the prongs of the penetrator tube in contact with the wires and the conductive penetrator tube and the conductive sheath provides electrically-conductive paths between the wires held in the penetrator tube while the insulated tube electrically inslates the exterior of the permanently deformable sheath.

4,065,638
DEMOUNTABLE BEARING AND SHAFT ASSEMBLY
Ralph F. Manriquez, San Jose, Calif., assignor to International Computers Limited, London, England
Filed June 22, 1976, Ser. No. 698,630
Int. Cl.² H04L *13/04*
U.S. Cl. 178—23 R **6 Claims**

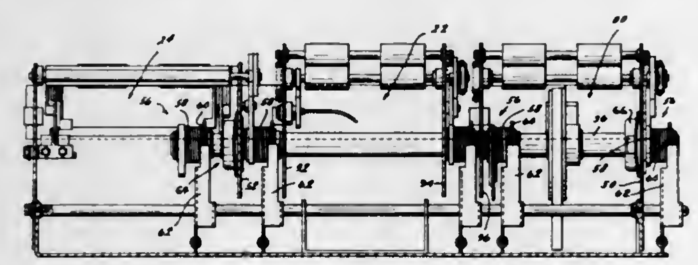

1. Demountable bearing and shaft assembly including a shaft of predetermined diameter; at least one bearing member for the shaft having a cylindrical body portion with a shaft-receiving aperture longitudinally therethrough, at least two ears forming an incomplete flange about the body portion at one end thereof and a circumferential groove in the body portion spaced away from the flange; a mounting plate having opposed surfaces forming a side wall perpendicular to the longitudinal axis of the shaft having a bearing locating aperture formed therein to receive and locate the body portion of the bearing member, the aperture having cutaway portions proportioned and positioned to correspond with the ears of the flange and a bowed spring retainer engageable in the groove of the body portion; the bearing member in use being engaged with the plate by the passage of the ears of the flange through the cutaway portions of the aperture, the bearing member thereafter being rotated in the aperture to bring the ears into abutting engagement with one surface of the plate of those positions between the cutaway portions, the spring retainer then contacting the opposite surface of the plate to maintain the member in the plate by spring tension.

4,065,639
SYNCHRONOUS TRANSMISSION CONTROL SYSTEM
Seigo Suzuki, Yokohama, and Seiji Eguchi, Kawasaki, both of Japan, assignors to Tokyo Shibaura Electric Co., Ltd., Tokyo, Japan
Filed Oct. 15, 1976, Ser. No. 732,701
Claims priority, application Japan, Oct. 15, 1975, 50-124147
Int. Cl.² H04L *7/00*
U.S. Cl. 178—69.1 **3 Claims**

1. a synchronous transmission system for synchronously transmitting data between transmitting and receiving sides, comprising:

a first-in/first-out stack for storing plural kinds of synchronous pattern signals;

means for successively comparing the synchronous pattern signals stored in said stack with the synchronous pattern signals transmitted from the transmitting side, respectively, in a predetermined timing;

means for detecting the result of the comparison of said comparison means; and

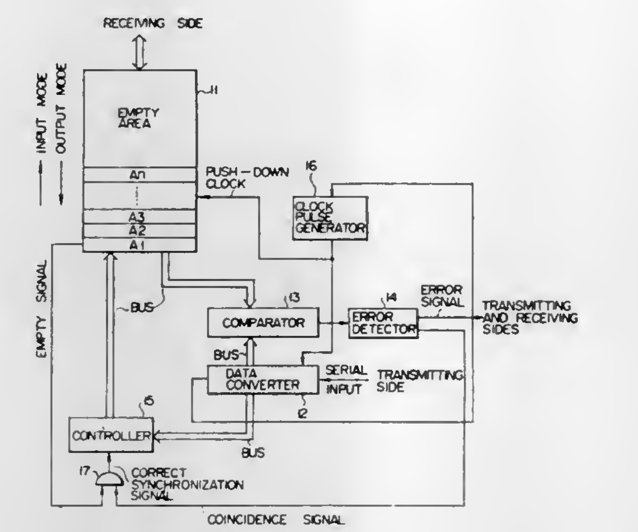

means for switching the direction of the data flow in said stack in response to the output of said detecting means.

4,065,640
APPARATUS FOR INTERCONNECTING A TELEPHONE LINE AND A PORTABLE CALCULATOR
Jean Marie Rouiller, Couvet, Switzerland, assignor to Stoppani S.A., Establissements pour la mecanique de precision et l'electro-mecanique, Bern and Oliver Technik AG, Zurich, both of, Switzerland
Filed July 19, 1976, Ser. No. 706,590
Claims priority, application Switzerland, July 31, 1975, 10012/75
Int. Cl.² H04M *15/00*
U.S. Cl. 179—7.1 TP **9 Claims**

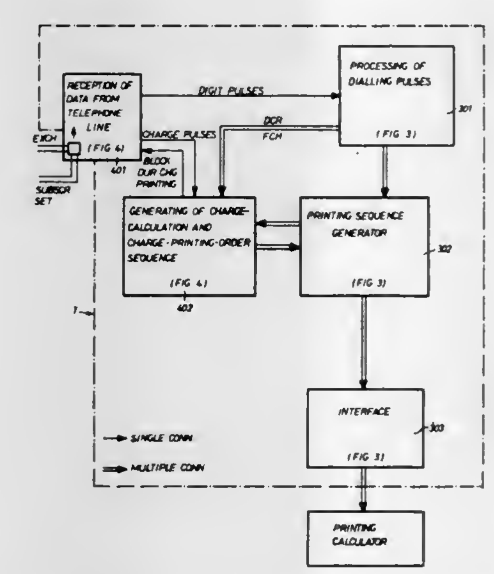

1. An apparatus for interconnecting a telephone line and a calculator equipped with a printer, with display means, and with input members in the form of keys or the like for introducing numeric values and operating orders, said apparatus being of the type which controls said calculator as a function of dialling and charge data appearing on said telephone line and which causes said calculator to print a called telephone number, to display the charges successively incurred during the call, and to print the total charge for said call upon termination thereof, the improvement comprising:

first means connected to said telephone line for separately detecting dialling-type pulses and charge-type pulses,

second means for establishing connections to said calculator only at contacts corresponding to said input members,

processing means connected to said first means for recognizing and processing true dialling pulses,

order-transmitting means connected to said second means and to said processing means for controlling the printing by said printer of numeric values corresponding to pulse trains formed by said dialling pulses, and

calculation and charge-printing control means connected to said first means and to said order-transmitting means for recognizing true charge pulses and for emitting for each charge pulse a control sequence for adding a charge unit, said sequence comprising elementary orders which are transmitted by said order-transmitting means to said calculator via said second means, thereby causing sold calculator to display the total of said charge units,

said processing means being responsive to the end of said call for generating an end-of-call signal, and said control means being connected to said processing means for receiving an end-of-call signal said for thereupon emitting a charge-printing order which is transmitted by said order-transmitting means to said calculator, thereby causing said calculator to print said displayed total.

4,065,641
HIGH CAPACITY TIME CONNECTION NETWORKS
Jacques Henri Provendier, Lannion, France, assignor to Societe Anonyme de Telecommunications, Paris, France
Filed Mar. 30, 1976, Ser. No. 671,826
Claims priority, application France, Apr. 18, 1975, 75.12180
Int. Cl.² H04J *3/00*
U.S. Cl. 179—15 AT **1 Claim**

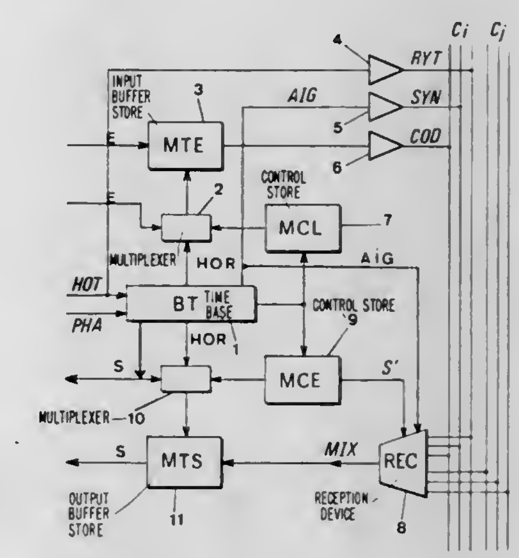

1. A time connection network of the kind comprising p switching units having each an input buffer store and an output buffer store, and a space stage to transmit digital information in form of words or groups of n binary digits from one input buffer store toward one output buffer store at a rate of one word per digit time slot, comprising means for serially transmitting the information signals read in an input buffer store, means for transmitting clock signals at the rate of said series transmission, means for generating a rectangular signal having a period of m words, preferably of two words, means for distributing information signals and clock signals in two paths A and B, one path being gated by the leading edges of said rectangular signal and the other path by the trailing edges of the same signal, means for serial-to-parallel converting the information signals controlled by said clock signals, means for re-phasing the transmitted signals, controlled by said rectangular signal, serial-to-parallel conversion and re-phasing being carried out in each path, and means for multiplexing signals from paths A and B and transmitting them to an output buffer store.

4,065,642
MESSAGE SIGNALING AND ALERTING SYSTEM AND METHOD THEREOF
William C. McClure, 1906 S. Nome St., Denver, Colo. 80232
Filed Apr. 24, 1975, Ser. No. 571,435
Int. Cl.² H04M *3/42*
U.S. Cl. 179—18 B **62 Claims**

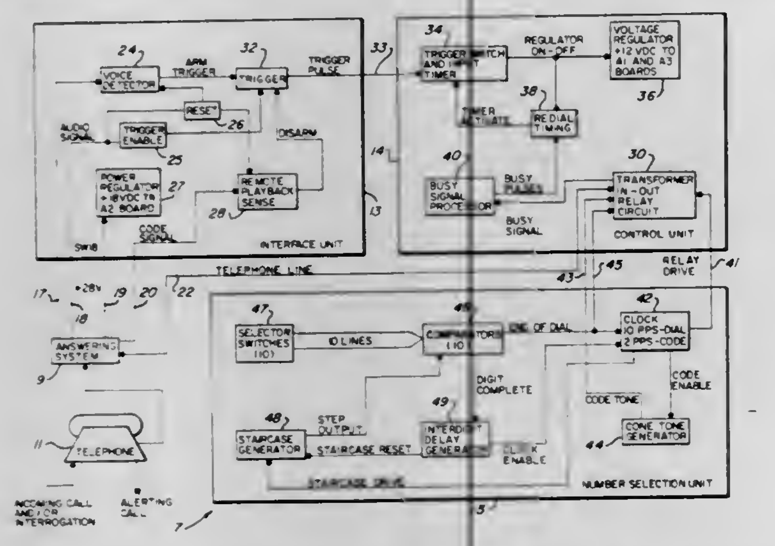

1. A telephone signaling system for use with an electronic answering unit that is connectable with a telephone so that when connected a caller can record a message for later playback by an intended recipient, said system comprising:
sensing means connected with said electronic answering unit for sensing recording of a message by said unit and providing an output indicative thereof; and
alerting means connected with said sensing means and upon receipt of said output therefrom providing a predetermined signal to be sent to a preselected device whereby an intended recipient can be quickly alerted that a message has been recorded by said answering unit.

4,065,643
COMMUNICATION FACILITY INTEGRITY CHECKING ARRANGEMENT
Ronald Eugene Girod, Gahanna, Ohio, assignor to Bell Telephone Laboratories, Murray Hill, N.J.
Filed Nov. 17, 1976, Ser. No. 742,628
Int. Cl.² H04M *7/06*
U.S. Cl. 179—18 AH **21 Claims**

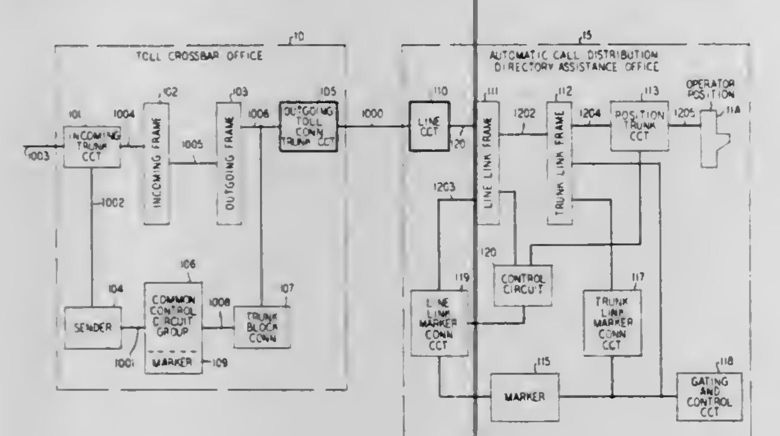

1. An arrangement for verifying the integrity of an interoffice communication channel connecting a first terminal to a second terminal comprising:
means in said first terminal actuated by a receipt of a first check signal from a checking circuit selectively connected thereto for sending a first integrity verification signal over said interoffice channel to said second terminal,
means in said second terminal actuated in response to a receipt of said first verification signal from said first terminal for transmitting thereto a second verification signal of predetermined duration to complete said interoffice integrity verification, and
means actuated by a receipt of said second verification signal and deactuated upon the expiration of said predetermined duration for delaying the transmission of a second check signal to said checking circuit until said interoffice integrity verification has been completed to thereafter effect the disconnection of said checking circuit.

4,065,644
ELECTRO-OPTICAL AND ELECTRONIC SWITCHING SYSTEMS
Leonard W. Shinosky, Jr., 3714 White Pine Road, Apt. C, Baltimore, Md. 21220
Continuation-in-part of Ser. No. 573,177, April 30, 1975, abandoned. This application Jan. 19, 1977, Ser. No. 760,607
Int. Cl.² H04B *9/00*
U.S. Cl. 179—18 GF **42 Claims**

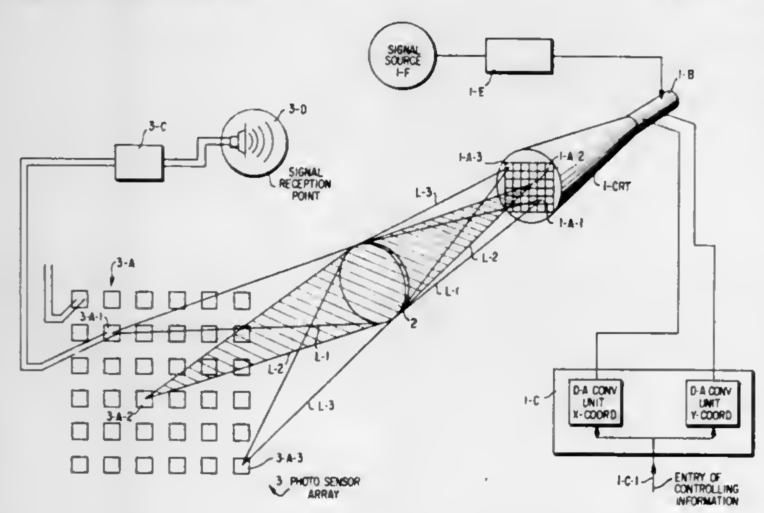

22. A telephone switching system comprising interfacing means to convert signals from telephones on single lines into two separate signals, one for receiving from the telephone and one for transmitting to the telephone, an array of substantially contiguous radiation sensitive electrical circuit devices, means to selectively direct radiation to any selected one of said devices, means to modulate said radiation in accordance with information received through said interfacing means, separate electrical circuits connected with each of said devices to electrically transmit signals received by the devices, and data storage and utilization means to receive information from a telephone describing the telephone transmitting and a telephone number called at the telephone transmitting and to utilize said information to control said means to selectively direct radiation so that received signals from said interfacing means from a telephone from which a telephone number is called are directed to a said circuit device connected to the receive line of the called telephone and the transmitted signal from said interfacing means from the called telephone is directed to a said circuit device connected to the receive line of the telephone from which the called telephone was called.

4,065,645
HEADSET
Donald E. Warner, North Hollywood, and George C. Oyama, Northridge, both of Calif., assignors to Audiotronics Corporation, North Hollywood, Calif.
Filed Oct. 26, 1976, Ser. No. 735,896
Int. Cl.² H04M *1/05*
U.S. Cl. 179—156 R **7 Claims**

1. A headset including a pair of earpieces and a continuous head strap extending from one earpiece to the other earpiece,
the continuous head strap including end portions and the earpieces each including a cavity and with each end portion extending into the cavity in the earpiece and with the ends of the end portions enclosed within the earpieces and with the continuous head strap forming a flexible member for supporting the earpieces at the end portions,
the end portions of the head strap slideable within the cavities in the earpieces for providing adjustment of the headset and including stop members to limit the travel of the end portions, and

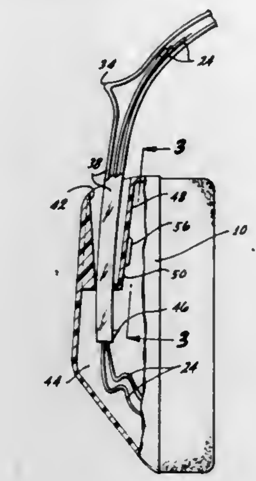

wires extending through the head strap from one end portion to the other end portion and into the earpieces and with the wires fuly contained within the continuous head strap and the earpieces.

4,065,646
POWER CONVERTER
Peter Otto Schuh, Indianapolis, Ind., assignor to Bell Telephone Laboratories, Incorporated, Murray Hill, N.J.
Filed June 28, 1976, Ser. No. 700,325
Int. Cl.² H04B *3/36*
U.S. Cl. 179—170 R **8 Claims**

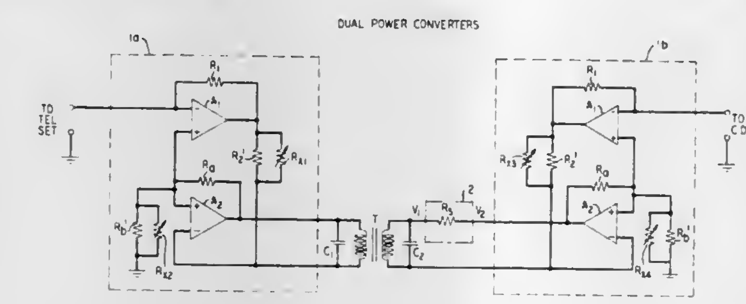

1. A bilateral AC-signal controller suitable for use in the two-wire portion of a telephone transmission line comprising:
a. a power converter disposed in said two-wire line, and
b. a directional threshold detector serially disposed in said two-wire line and adapted to supply a control signal to said power converter in response to the direction of AC-signal flow in said two-wire line.

4,065,647
AUTOMATIC ACOUSTICAL TESTING SYSTEM
George Joseph Frye, 12175 SW. Douglas, Portland, Oreg. 97225, and Leonardus Johannes Geerling, Rte. 2, Box 124D, Hillsboro, Oreg. 97123
Continuation-in-part of Ser. No. 608,871, Aug. 29, 1975. This application July 19, 1976, Ser. No. 706,640
Int. Cl.² H04R *29/00*
U.S. Cl. 179—175.1 A **8 Claims**

1. An automatic acoustical testing system, comprising in combination:
oscillator means for generating a selected signal frequency;
amplifier means for receiving said selected signal frequency and amplifying same to provide an amplified driving signal;
means coupling said driving signal to an acoustical device to be tested;
means receiving an output from the device to be tested and digitially processing said output;
distortion analyzer circuit means receiving an output signal from said receiving and digitally processing means and further processing said output signal;
digital computer processor means interfacially connected to said oscillator means, amplifier means, receiving and digitally processing means and distortion analyzer circuit means for controlling and processing analog and digital signals provided to and derived from said oscillator

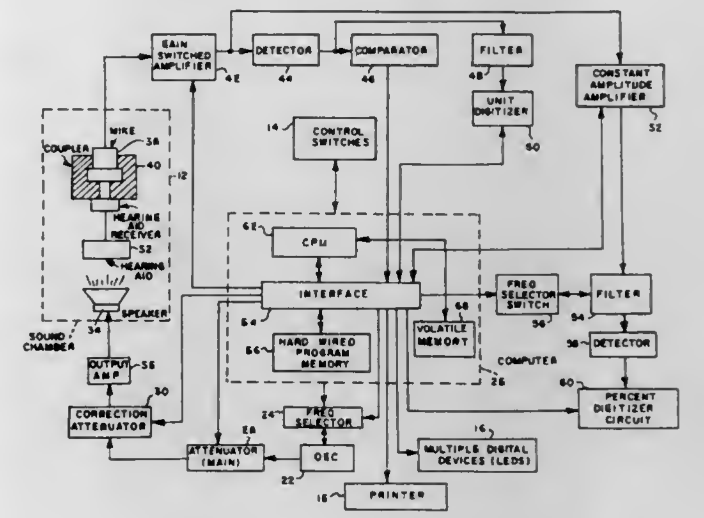

means, amplifier means, receiving and digitally processing means and distortion analyzer circuit means; and
readout means interfacially connected to said digital computer processor means for providing readout of said analog and digital signals.

4,065,648
MICROPHONE SCREEN
Henry J. Cvetko, and Donald W. Peterson, both of Conneaut, Ohio, assignors to The Astatic Corporation, Conneaut, Ohio
Filed Oct. 12, 1976, Ser. No. 731,293
Int. Cl.² H04R *1/00*
U.S. Cl. 179—178 **10 Claims**

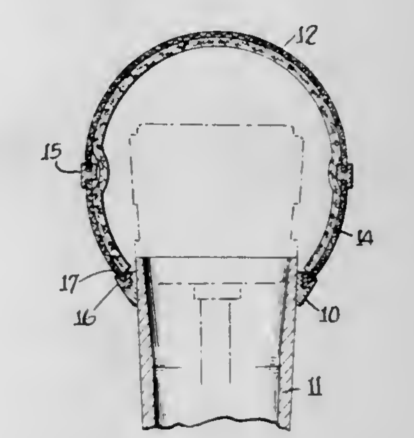

1. A microphone assembly, comprising:
a microphone body, having an externally threaded projection at an end thereof, said projection being of a smaller peripheral size than an adjoining portion of said body to provide a shoulder thereat,
a screen having a portion surrounding said projection,
a base ring having internal screw threads engaging the threads on said projection, and adapted to be threaded to functional position adjacent to said shoulder,
said screen having an opening, the defining peripheral portion of which is secured to said base ring.

4,065,649
PRESSURE SENSITIVE MATRIX SWITCH HAVING APERTURED SPACER WITH FLEXIBLE DOUBLE SIDED ADHESIVE INTERMEDIATE AND CHANNELS OPTIONALLY INTERPOSED BETWEEN APERTURES
Everett M. Carter, and Wilbur C. Quain, both of Winona, Minn., assignors to Lake Center Industries, Winona, Minn.
Continuation-in-part of Ser. No. 591,772, June 30, 1975, abandoned. This application June 14, 1976, Ser. No. 695,968
Int. Cl.² H01H *13/70*
U.S. Cl. 200—5 A **9 Claims**

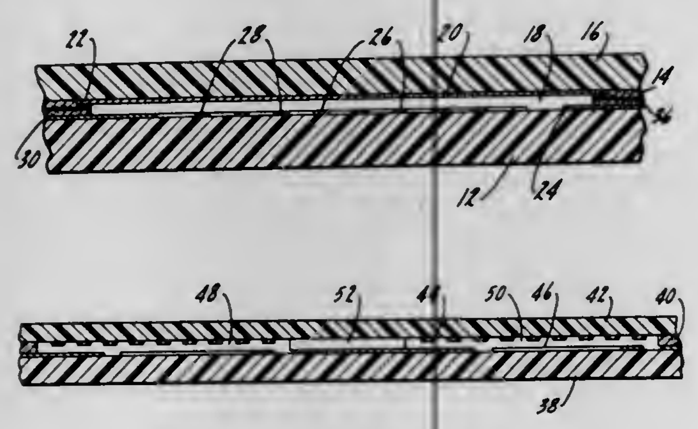

1. In a switch control device, a backing layer with a printed circuit having switch conductors on the upper surface thereof defining at least one switch contact area, a flexible adhesive insulating layer adhering to the upper surface of the backing layer with at least one opening around the switch contact area, and a flexible contact layer adhering to the upper surface of the adhesive insulating layer and overlying the opening with a conductive shorting bar on the lower surface thereof aligned with the opening over the contact area, the flexibility and thickness of the adhesive insulating layer causing it to participate in the deformation of the contact layer to allow for contact of the shorting bar with the switch contact area without elongation of the contact layer when the contact layer is pressed toward the backing layer in the area aligned with the opening in the flexible adhesive insulating layer and causing spring return of the contact layer when such pressure is released, the adhesive insulating layer adhering to the upper surface of the backing layer and the lower surface of the contact layer to structurally retain the dimensional stability of the switch control device.

4,065,650
ELECTRONIC CALCULATOR WITH SWITCHES IN SOLID V- AND U-SHAPED GROUPS
Kwong-Li Lou, c/o Air Asia Co., Ltd., Quality Control Divison, Tainan, Taiwan 700, China /Taiwan
Filed Sept. 21, 1976, Ser. No. 725,233
Int. Cl.² H01H *13/70*
U.S. Cl. 200—5 R **8 Claims**

1. In a hand-held electronic calculator including a housing having a substantially planar top surface, a switchboard comprising:
at least one solid group of push-button switches projecting above the top surface of said calculator housing for receiving a user's fingertip, said group including at least one upright push-button.
6. In a hand-held electronic calculator including a housing having a substantially planar top surface, a switchboard comprising:
a plurality of groups of push-button switches projecting above the top surface of said calculator housing for receiving the user's fingertips, at least one of said groups including an upright push-button, said groups of push-button switches being distributed in a one-to-one correspondence with each finger location,

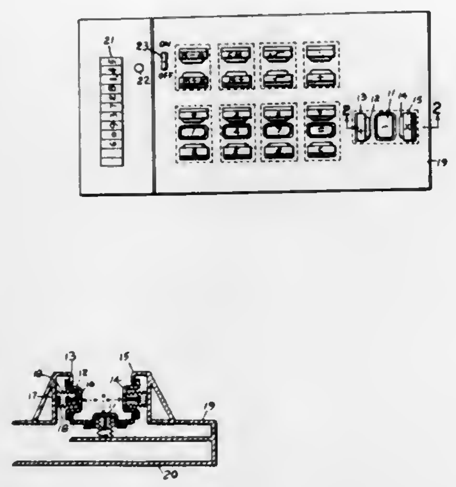

whereby each finger can cover a corresponding group of push-buttons, active fingers can cover at least two groups, and inactive fingers can cover less used groups.

4,065,651
KEYBOARD SWITCH ASSEMBLY HAVING FLEXIBLE RUNG LADDER CONTACTS
Bruno Erni, Bienne, and Pierre-Andre Meister, Ipsach, both of Switzerland, assignors to Societe Suisse pour l'Industrie Horlogere Management Services S.A., Bienne, Switzerland
Filed May 18, 1976, Ser. No. 687,472
Claims priority, application Switzerland, May 23, 1975, 6639/75
Int. Cl.² H01H *13/70*
U.S. Cl. 200—5 A **5 Claims**

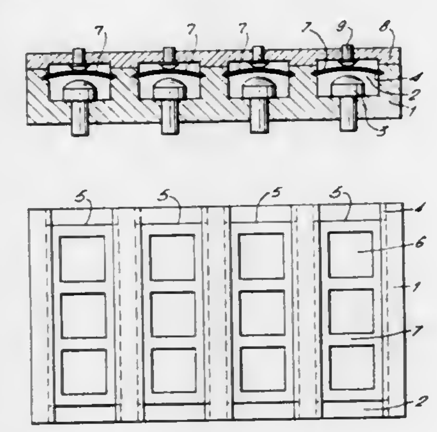

1. A keyboard comprising:
a support means;
a cover means;
a plurality of pushbuttons arranged in a matrix of rows and columns and having stem portions extending through said cover means;
a plurality of fixed contact means mounted on said support means in rows and columns whereby a fixed contact means is disposed opposite a corresponding one of said pushbuttons;
a plurality of flexible conductive contact members, one for each row of said matrix, each flexible conductive contact member being in the shape of a flat ladder having rungs, there being a rung for each column of said matrix;
said support means comprising a body having a plurality of partition walls separating a plurality of slots, said slots extending parallel to said rows;
said partition walls having longitudinal grooves therein on each side of each slot to provide a guideway for longitudinally inserting the flexible conductive contact members therein;
each said flexible conductive contact member being planar when unstressed and slightly wider than its guideway so as to require flexing of the rungs to an arched form transverse to the length of the flexible conductive contact member when positioned in said guideway.

4,065,652
CONTACT ASSEMBLY AND MOUNTING STRUCTURE FOR CROSS BAR SELECTOR SWITCH
Bror Ludvig Lundkvist, Skarholmen; Sven-Erik Lindeberg, Huddinge, and Karl Sievert Forsberg, Lyckeby, all of Sweden, assignors to Telefonaktiebolaget L M Ericsson, Stockholm, Sweden
Filed Sept. 9, 1975, Ser. No. 611,680
Claims priority, application Sweden, Sept. 27, 1974, 7412184
Int. Cl.² H01H *1/24, 63/06*
U.S. Cl. 200—175 **4 Claims**

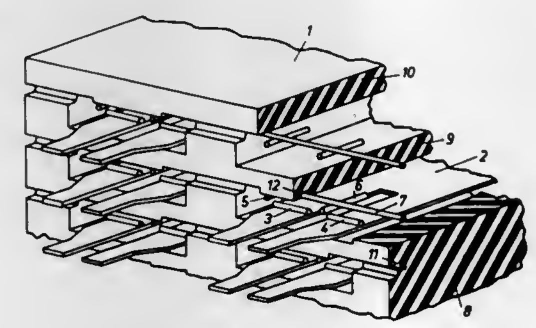

1. In a selector switch comprising a plurality of contact springs having transverse contact surfaces thereon, and a contact frame mounting said plurality of contact springs therein, wherein the improvement comprises: a plurality of contact strips, each of said plurality of contact strips comprising a conductor mounted in said contact frame near said contact surfaces of at least some of said plurality of contact springs and extending parallel with said contact surfaces, and a plurality of rod-shaped contact elements mounted on said conductor in a direction transversely of said contact surfaces of said some of said plurality of contact springs; and said contact frame comprises means for mounting said plurality of contact strips therein, said means comprising a plurality of first notched sections, each of said plurality of first notched sections having a groove which is open in a direction towards said contact surfaces mounted directly therebelow, and a plurality of second notched sections, each of said plurality of second notched sections having a groove which is open transversely to the direction of the grooves of said first notch sections, whereby said conductors of said contact strips are contained in said grooves of said first and second notched sections which accommodates said conductors after said conductors have been directed thereto.

4,065,653
CIRCUIT BREAKER MOUNTED WITHIN AN EXPLOSION-PROOF ENCLOSURE
William B. Jones, Bloomington, Ill., assignor to General Electric Company, New York, N.Y.
Filed Apr. 25, 1977, Ser. No. 790,775
Int. Cl.² H01H *9/04*
U.S. Cl. 200—302 **10 Claims**

1. In combination,
a. an explosion-proof enclosure;
b. a circuit breaker mounted within said enclosure, said circuit breaker comprising an insulating case, and a manually operable handle member extending from one surface of said case and movable between an on and an off position for opening and closing said circuit breaker;
c. means operable externally of said enclosure for moving said handle of said circuit breaker between said on and off positions; and
d. means provided by said case of said circuit breaker located on opposite sides of said handle of the circuit breaker for preventing exploding gases within said explo-

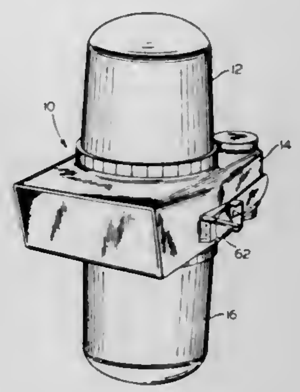

sion-proof enclosure from shattering said case of said circuit breaker.

4,065,654
MICROWAVE OVEN ADJUSTING (ENERGY DISTRIBUTION) AND TUNING ARRANGEMENT
Donald G. Moore, Glencoe, Ill., assignor to Chemetron Corporation, Chicago, Ill.
Filed Dec. 1, 1975, Ser. No. 636,850
Int. Cl.² H05B *9/06*
U.S. Cl. 219—10.55 F **14 Claims**

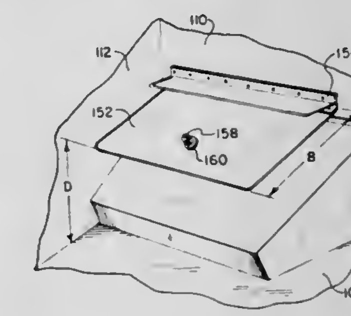

1. In a system for heating articles by supplying electromagnetic energy to the articles to be heated which are carried by a tray placed within a cavity defined in a heating structure of the system,
means for adjusting the distribution of energy supplied to particular areas of the cavity comprising a first generally planar electrically conductive member positioned in the cavity and near a boundary of the cavity and being movable such that a first edge is rotatable about a second opposite edge.

4,065,655
MICROWAVE LEAKAGE INDICATOR STRIP
James Y. Wong, Ottawa; Satish C. Kashyap, Hazeldean, and John G. Dunn, Hammond, all of Canada, assignors to Canadian Patents and Development Limited, Ottawa, Canada
Filed May 17, 1976, Ser. No. 687,237
Int. Cl.² H05B *9/06*
U.S. Cl. 219—10.55 D **3 Claims**

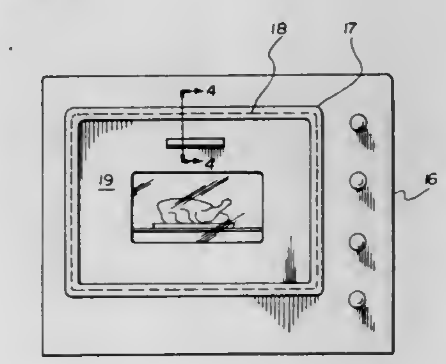

1. A microwave leakage indicator comprising in combination with a microwave oven having a door defining a slot

between the door and the oven where microwave leakage might occur, a strip of encapsulated liquid crystal film backed by a layer of microwave absorbing material mounted around the edge of the door overlapping the slot between door and oven, the film having the characteristics that if leakage above a preset level does occur at any location around the door the absorbing material generates heat resulting in a quickly noticeable color change in the liquid crystal film.

4,065,656
ELECTRICAL RESISTOR AND METHOD OF PRODUCTION
John T. Brown, and David W. Morgan, both of Corning, N.Y., assignors to Corning Glass Works, Corning, N.Y.
Filed June 30, 1975, Ser. No. 591,309
Int. Cl.² B23K *9/00*
U.S. Cl. 219—121 LM **4 Claims**

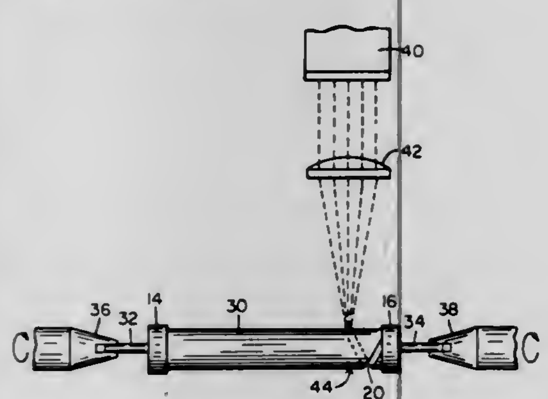

1. In a method for producing a spiralled, film type electrical resistor wherein a film of resistance material is deposited on the elongated surface of a glass rod and selected areas of said film of resistance material are removed from said glass rod by exposure to a laser beam, said filmed glass rod and said laser beam being moved relative to one another such that said film of resistance material is removed along a helical path about the periphery of said rod, the improvement which comprises incorporating FeO and/or CuO into the composition of said glass rod in an amount effective to absorb a sufficient amount of said laser beam to prevent damage to said film on the surface of said rod opposite to the surface exposed to said laser beam, said glass rod consisting essentially, in weight percent on the oxide basis, of 10–40% RO, wherein RO consists of at least two of the following oxides in the indicated proportions of 0–11% MgO, 0–12% CaO, 0–10% SrO, and 0–9%, BaO, 10–20% Al_2O_3, 0.1–5% FeO and/or CuO, 50–65% SiO_2, 0–10% B_2O_3, 0–3% SnO_2, and 0–2% As_2O_5 and/or Sb_2O_3.

4,065,657
CURLING IRON WITH STEPPED BARREL
Louis H. Zusser, Los Angeles, Calif., assignor to Northridge Trading Company, Northridge, Calif.
Filed Nov. 4, 1976, Ser. No. 738,641
Int. Cl.² H05B *3/00;* **A45D** *1/04*
U.S. Cl. 219—225 **7 Claims**

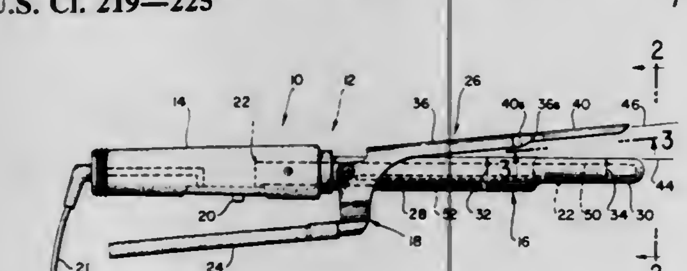

1. A curling iron comprising:
a body having a handle at one end and an elongated stepped barrel apparatus at the other end;
a heating element in said stepped barrel apparatus; and
a clamp device pivotally mounted on said body, said device having a handle at one end near said body handle and a clamping apparatus near said stepped barrel apparatus;
said stepped barrel apparatus having a small plurality of discrete barrel sections each of substantially different diameter spaced along its length, the barrel section closest said handle having the largest diameter and each successive barrel section having a successively smaller diameter, and said clamping apparatus extending along the length of said stepped barrel apparatus to overlay at least a portion of each barrel section.

4,065,658
ELECTRIC TOASTER CONTROL
Robert E. Keim, Bethlehem, Pa., assignor to General Electric Company, Bridgeport, Conn.
Filed Dec. 20, 1976, Ser. No. 752,629
Int. Cl.² F27D *11/02*
U.S. Cl. 219—386 **8 Claims**

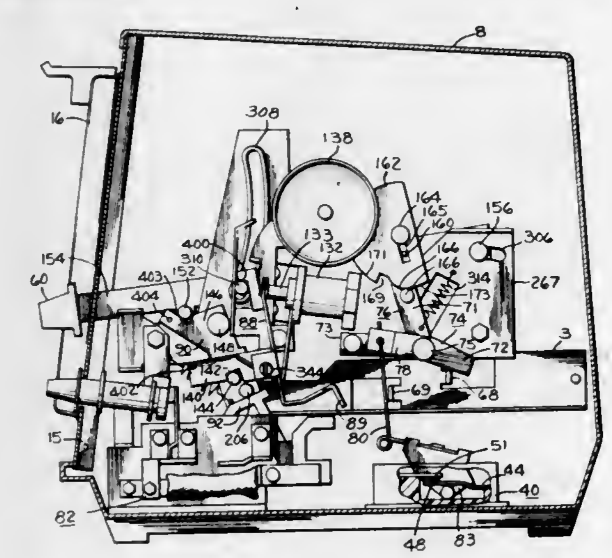

1. In an electric oven toaster wherein electric heating means supplies heat to a toasting chamber, a door is mounted on the oven toaster, a switch is provided for energizing and de-energizing the electric heating means, a toast timer is provided for opening the switch to de-energize the heating means at the end of a toasting cycle, a latch lever is positioned for operation by the toast timer and the door for opening the switch to de-energize the heating elements, and a manually operable lever is provided for closing the switch and starting the operation of said toast timer the improvement comprising:
a. a catch lever positioned between the manually operable lever and the latch lever for holding the latch lever in latched engagement therewith when the switch has been moved to its closed position for energizing the heating means;
b. means provided on said manually operable lever for moving the catch lever in one direction when the manually operable lever is moved in one direction for closing the switch for moving the catch lever into locking engagement with the latch lever to hold the latch lever and the catch lever in a toast timer operating position and the switch in a closed position; and
c. means on said manually operable lever for moving the latch lever to release the catch lever from the latch lever to stop the operation of said toast timer and open the switch upon manual movement of said manually operable lever.

4,065,659
FOOD PROCESSING OVEN
Ronald E. Yount, Boonville, and Robert A. Bell, Columbia, both of Mo., assignors to McGraw-Edison Company, Elgin, Ill.
Filed Jan. 9, 1976, Ser. No. 647,875
Int. Cl.² F27D *11/02*
U.S. Cl. 219—398 **12 Claims**

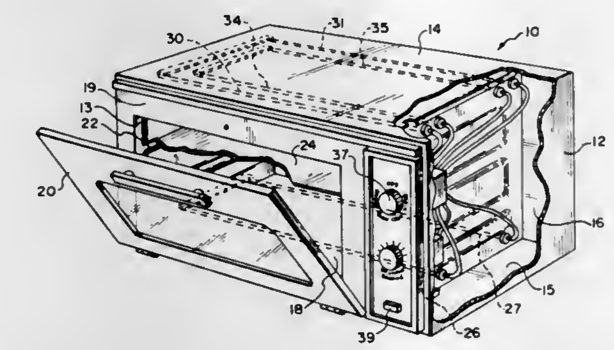

1. A food processing oven including in combination:
a heat retaining enclosure having upper, lower, side and end walls defining a cooking cavity, one of said end walls defining an access opening into said cavity, a door mounted on said one end wall for movement between open and closed positions with respect to said access opening,
electrically operated heating element means mounted within said cavity for heating the interior thereof,
means provided in said cavity in spaced relation with said heating element means for supporting food to be cooked in said cavity,
circuit means coupled to a source of power and to said heating element means for energization of the latter to heat said cooking cavity,
thermostat means coupled to said circuit means and disposed for monitoring the temperature within said cavity thereby to maintain said cavity temperature below a preselected temperature level, and
control means coupled to said circuit means and operable to a first mode for energizing said heating element means at full rated power output, said thermostat means being operable in said first mode for energizing and deenergizing said heating element means thereby to maintain said cavity temperature below said preselected temperature level, and to a second mode for energizing said heating element means at a reduced power output within the range of 10–30 percent of the full rated power output, said thermostat means being inactive in said second mode so that heating element means is energized continuously thereby to gradually increase the temperature in said cavity at a generally steady rate to within a predetermined temperature range of 220°–300° F.

4,065,660
ELECTRICAL APPLIANCE FOR HEATING FEEDING-BOTTLES AND LIKE CONTAINERS
Jean Claude Berard, Saint-Etienne, France, assignor to Seb S.A., Selongey, France
Filed Mar. 10, 1976, Ser. No. 665,569
Claims priority, application France, Apr. 4, 1975, 75.10612; Dec. 12, 1975, 75.38107
Int. Cl.² H05B *3/58*
U.S. Cl. 219—535 **3 Claims**

1. An electrical appliance for heating food containers, comprising a support having a base intended to receive the bottom of a container, said support having a handle, a relatively flexible heating quilt comprising an electric resistance wire and being secured to the handle, said resistance wire having two terminals intended to be connected with an electric supply, said heating quilt having two edge members and being foldable around the container placed on the base of said support and said heating quilt being secured to the handle by its two edge members, one of said edge members carrying means for fastening removably the heating quilt to the handle, wherein the two edge members are engaged in two parallel slots in spaced relation which extend vertically in the handle, said one edge member being removably engaged and fastened within the

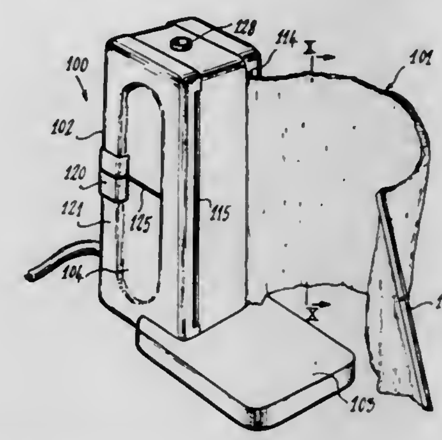

corresponding slot by means which comprise means for adjusting the engagement of the said one edge member within said corresponding slot.

4,065,661
PHOTOFINISHING APPARATUS
Jorg Jaskowsky, Stuttgart-Wangen, Germany, assignor to Eastman Kodak Company, Rochester, N.Y.
Filed Feb. 18, 1976, Ser. No. 659,181
Int. Cl.² G06K *15/00;* **G03G** *15/00*
U.S. Cl. 364—464 **5 Claims**

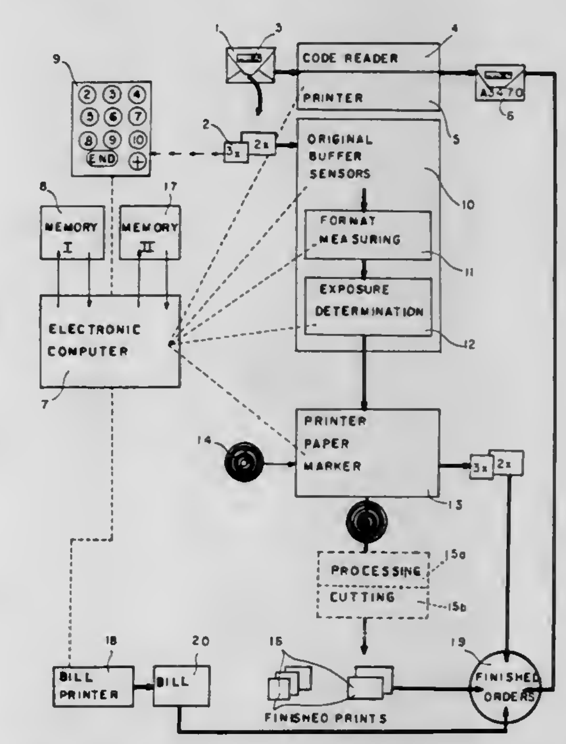

1. Photofinishing apparatus, comprising:
a. photographic printing means for producing photographic prints from originals;
b. data entry means for producing signals representative of the requirements for producing the prints;
c. bill printing means for printing a customer bill;
d. storage means for storing pricing data for the photographic prints; and
e. electronic computer control means electrically connected to said photographic printing means, said bill printing means, and said pricing data storage means for controlling said photographic printing means in response to said signals produced by said data entry means and for controlling said bill printing means in response to said signals produced by said data entry means and said pricing data stored in said pricing data storage means, whereby said data entered into said data entry means is entered only once thereby reducing the possibility of error in the printing of the bill.

4,065,662
CARD READER SYSTEM WITH IMPROVED INTERFACE
John S. Garczynski, Norristown; Charles C. Jablanofsky, Feasterville, and Joseph P. Murray, Schwenksville, all of Pa., assignors to Peripheral Dynamics, Inc., Norristown, Pa.
Filed May 26, 1976, Ser. No. 690,261
Int. Cl.[2] G06K *17/00, 7/00;* **G06F** *3/04*
U.S. Cl. 235—419 **25 Claims**

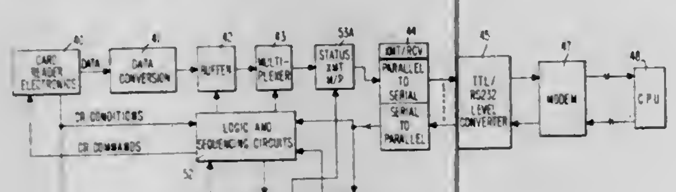

1. A card reader system providing for the interfacing of a plurality of card reader units with a central processing unit, comprising:
a. a central processing unit;
b. a plurality of card readers for reading cards, adapted to communicate with said central processing unit;
c. communication means for providing communication of information between said card readers and said central processing unit;
d. each of said plurality of card readers having
i. address means for receiving address signals from said central processing unit and for selectively enabling and disenabling card reader operation depending upon whether such card reader has been addressed;
ii. status word means for generating status words representative of operating conditions of said card reader;
iii. data word means for generating data words representative of data from said cards;
iv. multiplexing means for multiplexing said data words and said status words;
v. means for converting said data words and said status words from a first form to a second form suitable for transmission to said central processing unit; and
e. output transmit means for outputting data in said second form from said card reader to said communication means for transmission to said central processing unit.

4,065,663
RATE/TIME COMPUTER AND CONTROL DEVICE
James T. Edwards, II, 3236 S. Semoran, Apt. 12, Orlando, Fla. 32807
Filed Dec. 11, 1975, Ser. No. 639,650
Int. Cl.[2] G06F *15/20, 7/50, 7/52*
U.S. Cl. 364—464 **31 Claims**

1. A control device for computing a charge for an activity period, said control device comprising:
clock means for generating a representation of present time;
clock memory means having a plurality of clock memory addresses therein, each of said clock memory addresses for storing a start time therein;
rate memory means having a plurality of rate memory addresses therein, each of said rate memory addresses for storing a rate representation therein;
first selecting means for selecting one of said clock memory addresses, and for selecting one of said rate memory addresses;
first input means for providing an input from said clock means to said selected clock memory address, said input representative of said start time;
second selecting means for selecting said rate representation;
second input means for providing an input from said second selecting means to said selected rate memory address;
first output means for providing an output signal representative of said start time from said selected clock memory address, and for providing an output signal representative of said rate representation from said selected rate memory address; and
digital computation means for receiving input signals from said clock means and said first output means, for computing said activity period by subtracting said start time from said present time, and for computing said charge for said activity period by multiplying said rate representation by said activity period.

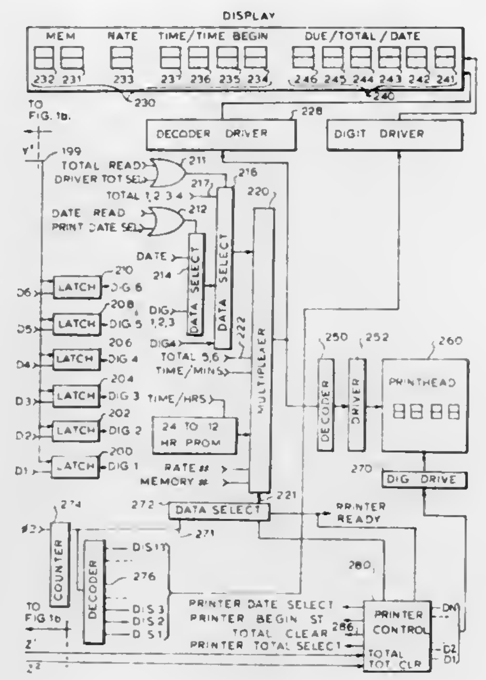

4,065,664
FLOATING POINT REGISTERS FOR PROGRAMMED DIGITAL INSTRUMENTS
Paul J. Kristof, and Frederick A. Rose, both of Fort Atkinson, Wis., assignors to Norland Corporation, Fort Atkinson, Wis.
Filed Mar. 26, 1976, Ser. No. 670,722
Int. Cl.[2] H01J *29/70;* **G01R** *23/16*
U.S. Cl. 364—487 **11 Claims**

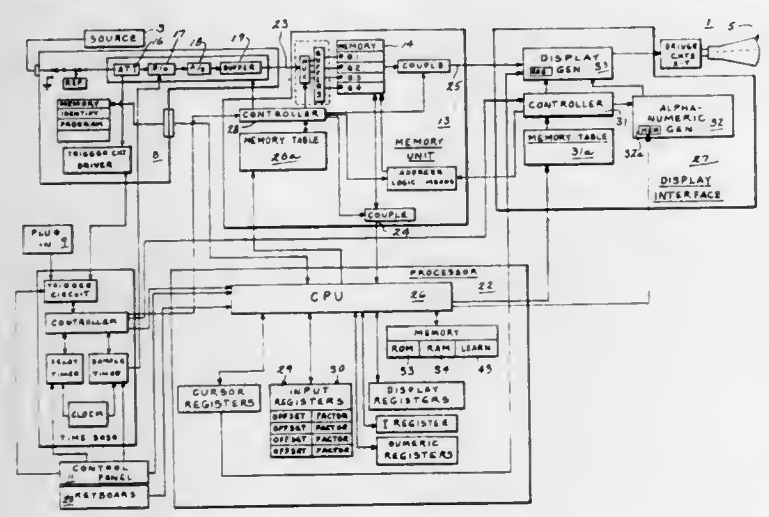

1. A waveform measuring and analyzing instrument, comprising digital memory means for storage of the coordinates of the waveform in digitized form, a data acquisition means connected to said memory means for establishing digitized waveform signals of a waveform, a programmed processor having a program memory, an interactive user operated control means having a plurality of keystroke means for calculating with data in said memory means, said processor means including a plurality of data modifying registers for each block of said memory means, means for placing modifying values in said registers, said values being common to each location in each block of said memory means, said processor modifying the data in each of said locations in said block by said plurality of registers to create actual values of data.

4,065,665
METHOD AND APPARATUS FOR THE DETERMINATION OF START TIME DIFFERENCE AND OVERALL PHASE SHIFT BETWEEN TWO SIGNALS
Eike Rietsch, Celle, Germany, assignor to Deutsche Texaco Aktiengesellschaft, Hamburg, Germany
Filed Mar. 8, 1976, Ser. No. 664,441
Int. Cl.[2] G01R *25/00*
U.S. Cl. 364—487 **15 Claims**

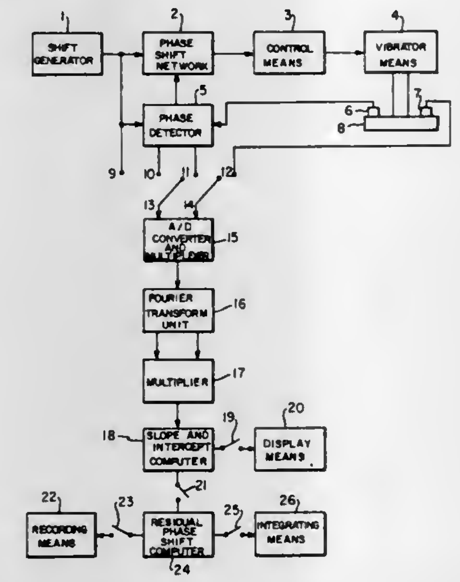

12. Apparatus for determining the time shift and total phase difference between two signals comprising phase difference means adapted to receive the two signals for determining a value $\psi(f)$, representative of the phase relationship between the two signals, for each frequency f contained in the two signals, and providing corresponding g signals, and their associated f signals, slope and intercept means connected to the phase difference means for determining a slope A and an ordinate intercept B of a best fitting straight line $g(f) = Af+B$ through the totality of the values ψ in accordance with the f and g signals and providing signals A and B corresponding to the slope A and the ordinate intercept B; time shift signal means connected to the slope and intercept means for providing an output corresponding to the time shift τ in accordance with signal A and the following equation:

$$\tau = A/2\pi;$$

and total phase shift signal means connected to the slope and intercept means for providing an output ψ_0 corresponding to the total phase shift in accordance with signal B and the following equation:

$$\psi_0 = B \text{ modulo } (2\pi).$$

4,065,666
MULTIPLY-DIVIDE UNIT
Chin Tao Wu, North Brunswick, N.J., assignor to RCA Corporation, New York, N.Y.
Filed Oct. 15, 1976, Ser. No. 732,866
Int. Cl.[2] G06F *7/54*
U.S. Cl. 364—759 **7 Claims**

1. A circuit for multiplying or dividing a multiplicand or divisor value stored in a first register means having m stages by or into a multiplier or dividend value stored in a second register means having n stages, where $n \geq m$, said registers having input means and output means, comprising in combination:
means for producing a divide signal when a divide operation is to be performed;
complementing means responsive to said divide signal for selectively complementing the signals from the output means of said first register means;
adder means having m stages including a most significant stage and a least significant stage responsive to signals from the output means of said first register means coupled through said complementing means and the signals from the output means of the m most significant stages of said second register means for producing sum signals and a carry-out signal from the most significant stage, and including means for coupling said divide signal to said least significant stage of said adder as a carry-in signal;
means responsive to said divide signal for storing the carry-out signal in the least significant stage of said second register;
means for shifting the contents of said second register to the next less significant stage in the absence of said divide signal and to the next more significant stage in response to said divide signal, said means for shifting including means responsive to the least significant value in said second register for substituting the sum signals for the contents of the m most significant stages of the second register; and
control means for timing the shifting means including means responsive to said divide signal for shifting the contents of said second register initially to the next more significant stage and finally to the next less significant stage.

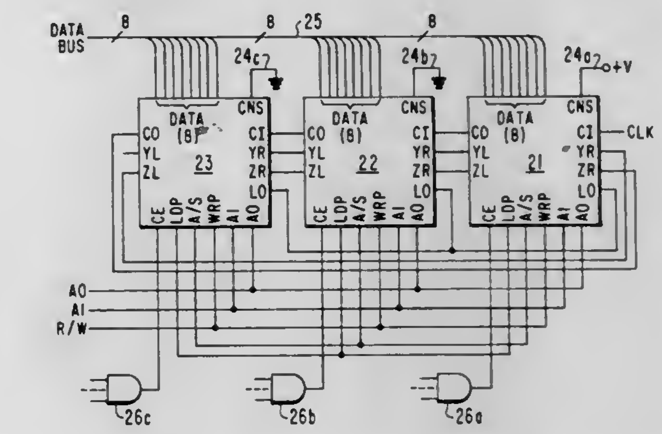

4,065,667
INDIRECT LIGHTING FIXTURE INCLUDING IMPROVED REFLECTOR
Alan J. Ruud, West Allis, Wis., and Ian Lewin, Scottsdale, Ariz., assignors to Donald L. Goulet, Wauwatosa and Alan J. Rudd, West Allis, both of, Wis.
Filed Nov. 13, 1975, Ser. No. 631,514
Int. Cl.[2] F21S *1/02*
U.S. Cl. 362—217 **9 Claims**

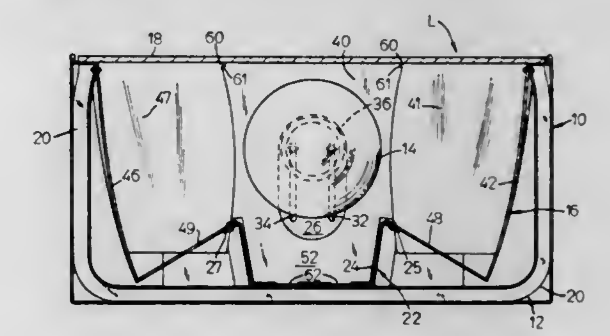

1. A light fixture for use with a light emitting lamp for indirect lighting, said light fixture comprising: reflector means surrounding portions of said lamp for reflecting said light against an area of an opposed surface and for distributing said light across said area in a uniformly distributed intensity; and reflector support means including means for supporting said lamp; said reflector means including a plurality of independently angularly positioned reflector panels defining an octagonal configuration around said lamp, and said plurality of reflector panels including opposed generally V-shaped reflector panels extending along opposite sides of said lamp, said V-shaped panels each including a pair of angularly disposed intersecting reflector surfaces, one of said surfaces being positioned generally normal to the direction of the light emitted by the lamp and striking said one surface and the other of said surfaces generally lying in a plane extending radially outwardly from said lamp, at least one of said plurality of indepen-

dently angularly positioned reflector panels being positioned diagonally with respect to said one surface, and wherein said plurality of independently angularly positioned reflector panels include opposed end reflector panels disposed adjacent opposite ends of said V-shaped reflector panels, said V-shaped reflector panels and said end reflector panels being joined by diagonally disposed reflector panels.

4,065,668
PHOTODIODE OPERATIONAL AMPLIFIER
Dennis M. Monticelli, Fremont, Calif., assignor to National Semiconductor Corporation, Santa Clara, Calif.
Filed July 22, 1976, Ser. No. 707,745
Int. Cl.² H01J *39/12*
U.S. Cl. 250—214 P **8 Claims**

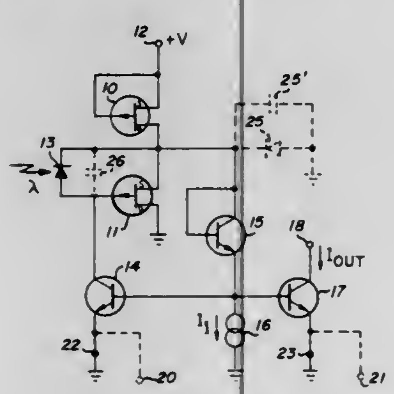

1. A composite JFET bipolar transistor photo responsive electronic circuit comprising:
a P-N junction photodiode;
negative feedback means, including a source follower connected JFET having a matched constant current connected JFET as a source load, for maintaining the potential across said photodiode at substantially zero under dark conditions; and
means for replicating the photo current generated in said photodiode in the collector of a bipolar transistor coupled to said photodiode.

4,065,669
SOLID-STATE LIMIT SWITCH UTILIZING INFRARED LINK
George F. Bogel, Pittsburgh, Pa., assignor to Westinghouse Electric Corporation, Pittsburgh, Pa.
Continuation of Ser. No. 464,731, April 26, 1974, abandoned. This application Mar. 5, 1976, Ser. No. 664,115
Int. Cl.² G01D *5/34*
U.S. Cl. 250—229 **5 Claims**

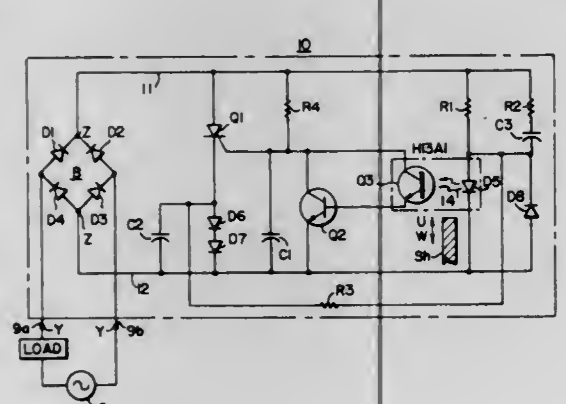

1. A limit switch, comprising:
two terminal circuit means the terminals of which are externally disposed in series circuit relationship with a source of electrical power and a load for electrically disconnecting said load from said source of power under a predetermined condition;
infrared light sensitive switch means connected internally of said circuit means in series circuit relationship with said terminals of said circuit means for electrically providing said predetermined condition to disconnect said load from said source of electrical power when an amount of infrared light striking said infrared light sensitive switch means is of a predetermined value;
infrared light source means connected internally of said circuit means in circuit relationship with said terminals of said circuit means for supplying infrared light to said infrared light sensitive switch means; and
movable shutter means for interposition between said infrared light source means and said infrared light sensitive switch means to thereby control the amount of infrared light which strikes said light sensitive switch means, said shutter means being movable to a position relative to the position of said light source means and the position of said light sensitive switch means to limit the amount of said infrared light which strikes said light sensitive switch means to said predetermined value, said light sensitive switch means thereafter acting in conjunction with said two terminal circuit means to isolate said load from said source of electrical power, said light sensitive switch means thereafter also acting in conjunction with said two terminal circuit means to provide less infrared light to said light sensitive switch means without further movement of said shutter means to thus latch said load and said source of electrical power opened.

4,065,670
SPHERICAL ELECTRODE X-RAY IMAGING CHAMBER
Arthur Lee Morsell, Van Nuys, Calif., assignor to Xonics, Inc., Van Nuys, Calif.
Filed Oct. 6, 1976, Ser. No. 729,946
Int. Cl.² G03B *41/16*
U.S. Cl. 250—315 A **14 Claims**

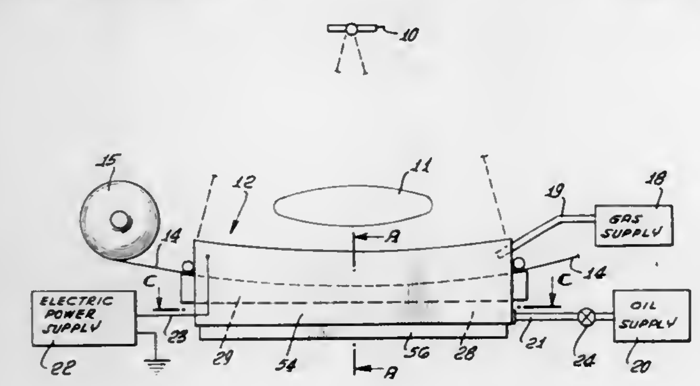

1. In an imaging chamber for a radiographic system, the combination of:
a base;
a first electrode carried in said base;
an X-ray window comprising an outer plate and an inner plate with a conductive surface serving as a second electrode, with said plates in engagement at opposite sides thereof and spaced from each other between said sides by a compression resistant filler;
means for mounting said plates to said base with said inner plate adjacent said first electrode defining a gap therebetween; and
means for sealing said gap adjacent the periphery of said inner plate to maintain a fluid in said gap.

4,065,671
DEVICE FOR DETECTING X-RAY RADIATION
Christian Mayeux; Francois Micheron, and Jean Pierre Vasseur, all of Paris, France, assignors to Thomson-CSF, Paris, France
Filed Mar. 30, 1976, Ser. No. 671,964
Claims priority, application France, Mar. 25, 1975, 75.09320
Int. Cl.² G01T *1/22*
U.S. Cl. 250—370 **13 Claims**

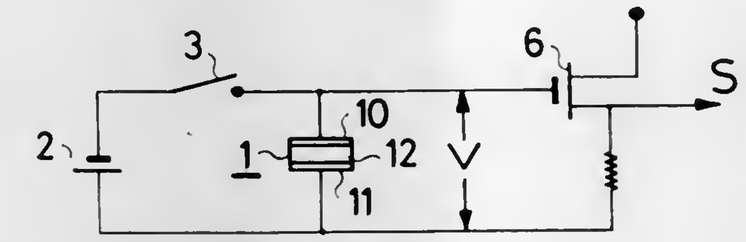

1. A device for detecting X ray radiation comprising: a plate of ferroelectric material positioned for receiving said X ray radiation on one of its major faces; said ferroelectric material being capable of absorbing the major part of said X ray radiation over a given depth; said ferroelectric material having a conductivity increasing under the effect of said X ray radiation; said device further comprising biasing means for providing electrical charges at least at one of the major faces of said plate and charge detection means for sensing the variation in the amount of said electrical charges resulting from the conductivity increase caused by the X ray radiation dose received by said plate; the thickness of said plate being selected to match said depth.

4,065,672
ULTRAVIOLET SENSOR AND EXPOSURE INSTRUMENT
Joseph W. Charpster, 11450 Overbrook Lane, Galena, Ohio 43021
Filed May 17, 1976, Ser. No. 687,379
Int. Cl.² G01J *1/42*
U.S. Cl. 250—372 **4 Claims**

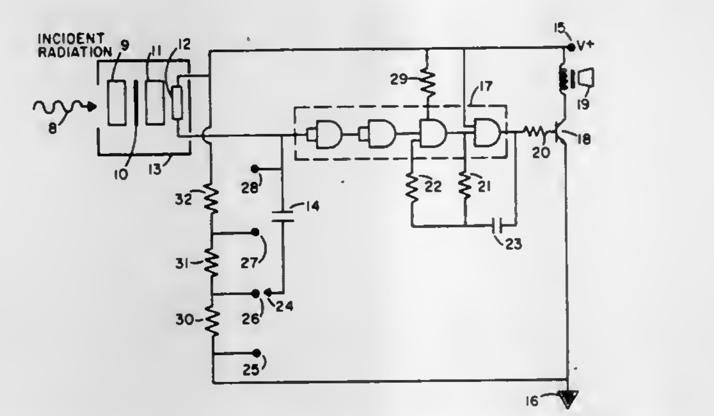

1. Apparatus for monitoring animal exposure to sunlight in accordance with a predetermined allowable dosage of ultraviolet radiation, comprising:
a portable housing;
an ultraviolet sensor situate within said housing and including;
an ultraviolet transmitting and visible light absorbing filter positioned for exposure to said sunlight and characterized in absorbing radiation incident thereupon in the visible region while transmitting radiation in the region of about 200 to 400 nanometers;
a converter layer of the phosphorescent type adjacent to said ulraviolet filter for absorbing ultraviolet radiation transmitted therethrough to emit radiation in the visible spectrum;
a second filter adjacent to said converter layer for transmitting said visible radiation and absorbing infrared radiation which may pass through said ulraviolet transmitting filter an said converter layer;
an optoelectronic detector positioned adjacent said second filter and having an electrical response in correspondence with the intensity of incident ulraviolet radiation on said ultraviolet filter; and
a radiation shield enclosing the edges of said ultraviolet transmitting filter, said converter, said second filter and said detector to prevent the entrance thereto of stray radiation;
an exposure monitoring circuit situate within said housing, comprising;
timing circuit means including capacitor means coupled in current integrating relationship with said detector and means for asserting a predetermined value of bias voltage upon said capacitor means, for deriving a voltage signal over an interval of time corresponding with said level of said optoelectronic electrical response and said bias voltage value;
threshhold responsive amplifier means coupled for response to said timing circuit means voltage signal and having an output when said voltage signal closely approaches a predetermined value;
alarm means having a perceptible output in the presence of said threshhold responsive amplifier means output; and
power supply means situate within said housing for powering said exposure monitoring circuit.

4,065,673
ROTOR CONTROLLER SYSTEMS FOR X-RAY TUBES
Louis L. Fiocca, Bensenville, Ill., assignor to Advanced Instrument Development, Inc., Melrose Park, Ill.
Filed Aug. 4, 1975, Ser. No. 601,647
Int. Cl.² H05G *1/70*
U.S. Cl. 250—402 **7 Claims**

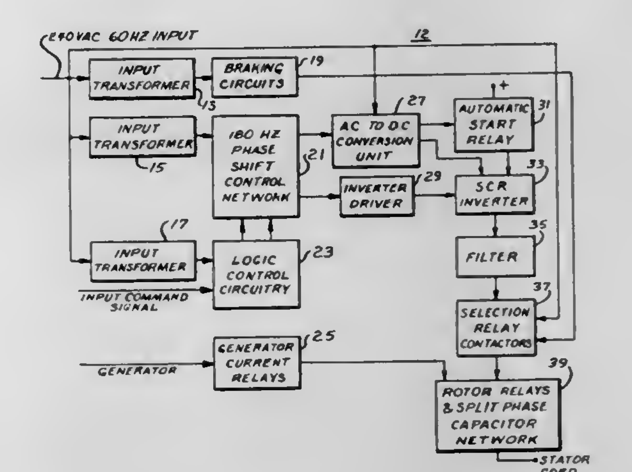

1. A system operable from an alternating current source for controllably providing power to an induction motor for driving rotating anodes of X-ray tubes; means for receiving the power at a line frequency and multiplying the line frequency; drive means for driving the motor and hence the anode; a phase shift network for selectively shifting the phase of the multiplied line frequency; said drive means being responsive to said phase shift network for selectively driving said motor at a first and at a second selected running speed and for accelerating said motor to the selected running speed dependent on the output of said phase shift network; and logic circuitry comprising first means for selectively connecting said phase shift network to select the X-ray tube anode to be rotated, second means for selecting the speed at which the anode is to be rotated, and acceleration timer means for controlling the length of time the drive means accelerates an anode dependent on the anode selected and the selected running speed.

4,065,674
ROTARY-ANODE X-RAY TUBE
Herman Gerard Lakerveld, and Johan Adriaan Rietdijk, both of Eindhoven, Netherlands, assignors to U.S. Philips Corporation, New York, N.Y.
Filed Oct. 7, 1976, Ser. No. 730,675
Claims priority, application Netherlands, Oct. 13, 1975, 7511984
Int. Cl.² H05G *1/70*
U.S. Cl. 250—406 **4 Claims**

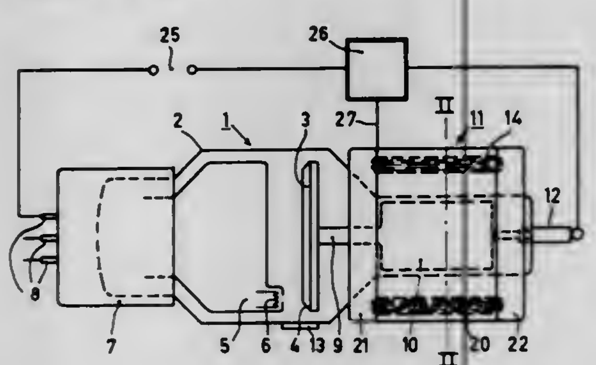

1. An X-ray tube comprising a rotary anode and a drive motor which comprises a rotor which is rigidly connected to the anode and a stator which is arranged about the rotor, characterized in that the stator is composed of a plurality of radially movable sector elements.

4,065,675
FLOW MONITORING DEVICES
Roy Charles Gold, London, England, assignor to The British Petroleum Company Limited, Sunbury-on-Thames, England
Filed June 3, 1976, Ser. No. 692,388
Claims priority, application United Kingdom, June 11, 1975, 25004/75
Int. Cl.² G01N *21/26;* **G08B** *21/00*
U.S. Cl. 250—576 **5 Claims**

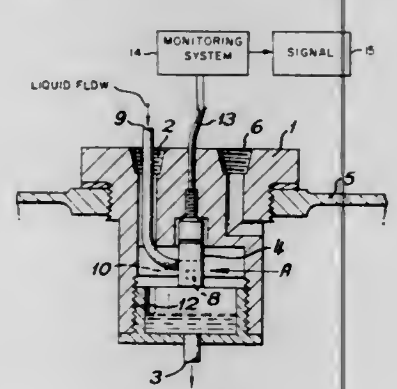

1. A liquid flow indicating device for sensing intermittent liquid flow and adapted for mounting on a sample-collecting container and comprising a flow monitor mounted on top of the container, the flow monitor having means forming a chamber having an inlet for the entrance of liquid and an outlet spaced from said inlet for the flow of said liquid out of said chamber, said liquid flowing along a path defined at its beginning by said inlet and at its end by said outlet, a probe mounted intermediately along the path in said chamber and comprising an energy transmitter and an energy receiver in spaced apart relation within said chamber, said transmitter being disposed on the transversely opposite side of the liquid path from said receiver said transmitter and said receiver having a passageway therebetween which includes said path and which permits the flow of said liquid along said path and between said transmitter and said receiver, whereby the flow of liquid along said path alters the energy transmitted across the path from said transmitter to said receiver, and the outlet receiving the liquid from the chamber and communicating with the container to deliver the liquid to the container and drain the chamber when no liquid is delivered to the inlet, a signal being generated when liquid is in the chamber between the transmitter and the receiver to indicate the intermittent flow of liquid through the chamber and the filling of the container.

4,065,676
BATTERY BACKUP FOR AC POWERED DC SUPPLY
Jack Elias, Lansdale, Pa., assignor to Honeywell Inc., Minneapolis, Minn.
Filed June 2, 1976, Ser. No. 692,127
Int. Cl.² H02J *9/00*
U.S. Cl. 307—66 **10 Claims**

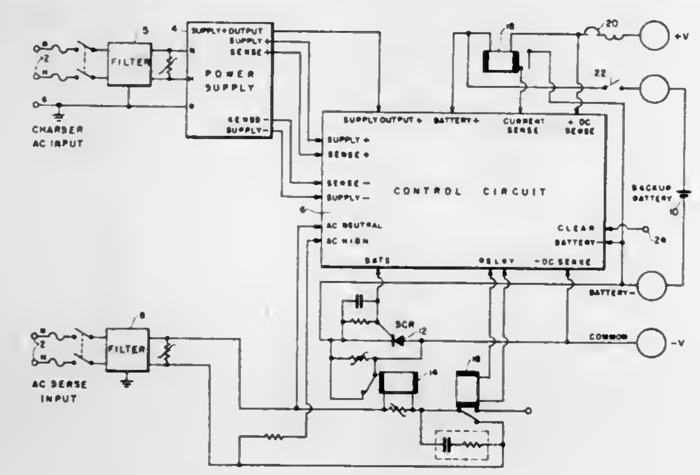

1. A backup system for supplying backup DC power to replace AC supplied DC power to a load during a failure of the AC supplied DC power comprising
- a pair of output terminals,
- a backup DC source,
- switching means for selectively connecting said DC source across said output terminals,
- control means for selectively operating said switching means in response to an input signal,
- AC line monitoring means including means for checking the frequency of an AC line signal used for the AC supplied DC power, means for checking the rise time of said AC line signal and means responsive to said means for checking the frequency and said means for checking the rise time to produce an output signal indicative of an error in either the rise time or frequency of said AC line signal and
- means for applying said output signal as an input signal to said switching means to operate said switching means to connect said backup DC source across said output terminals.

4,065,677
ELECTRICALLY CONTROLLED SWITCHING DEVICE
Francois Micheron; Gerard Doriath, and Eric Spitz, all of Paris, France, assignors to Thomson-CSF, Paris, France
Filed Dec. 23, 1975, Ser. No. 643,645
Claims priority, application France, Dec. 27, 1974, 74.42640
Int. Cl.² H01H *1/04*
U.S. Cl. 307—112 **14 Claims**

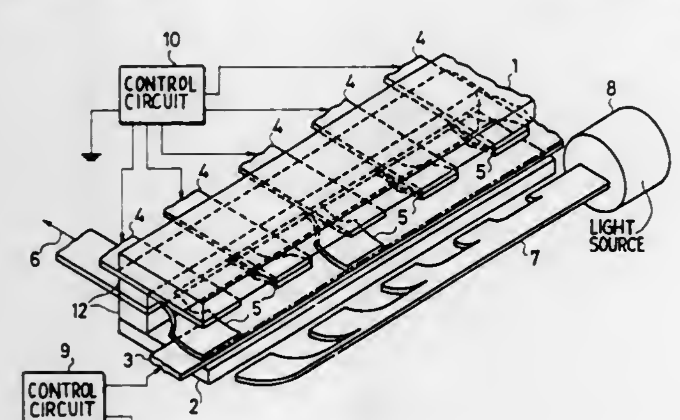

1. An electrically controlled switching device comprising a frame of insulator material and at least one movable member; said movable member having in relation with said frame at least two rest positions; said movable member comprising a dielectric body carrying a permanent electric charge; said frame being provided with at least two distinct electrically conductive pads for causing said movable member to be retained by electrostatic influence, in any one of said rest positions; electric bias means being connected to the said conductive pads for causing said movable member to switch across the gap separating said conductive pads.

4,065,678
CLAMPED PUSH-PULL DRIVER CIRCUIT WITH OUTPUT FEEDBACK
Edmund Arthur Reese, Sugarland, Tex.; Charles Shelley Meyer, Tempe, and George S. Leach, Jr., Phoenix, both of Ariz., assignors to Motorola, Inc., Schaumburg, Ill.
Filed July 2, 1976, Ser. No. 702,366
Int. Cl.² H03K *5/08, 19/08, 19/40*
U.S. Cl. 307—237 **3 Claims**

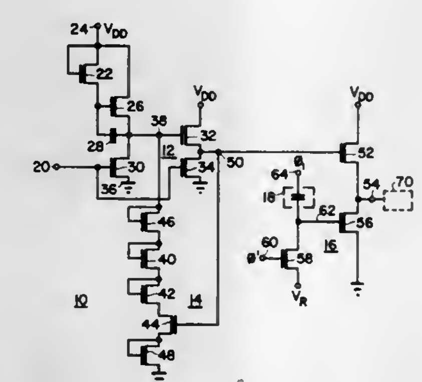

1. A circuit for producing a limited output voltage comprising:
- inverter means for producing a first voltage at a first node in response to an input voltage applied to said inverter means;
- output means coupled to said first node for producing a second voltage at a second node in response to said first voltage; and
- regulator means coupled to said first node and to said second node for limiting said first voltage in response to said second voltage, said regulator means including a plurality of insulated gate field effect transistors coupled in series between said first node and a first voltage conductor, one of said insulated gate field effect transistors having a gate electrode coupled to said second node, and the other of said insulated gate field effect transistors being diode-connected.

4,065,679
DYNAMIC LOGIC SYSTEM
Richard H. Heeren, Chicago, Ill., assignor to Teletype Corporation, Skokie, Ill.
Filed May 7, 1969, Ser. No. 822,520
Int. Cl.² H03K *17/60, 19/08, 19/20, 19/40*
U.S. Cl. 307—251 **2 Claims**

1. In combination;
- a field effect transistor having a source, a drain and gate for providing an impedance condition between said source and said drain;
- a first controlled switch having a first control terminal and first and second controlled terminals, said switch being responsive to a signal applied to said control terminal for altering the impedance between said first and second controlled terminals;
- means for connecting said source and drain to said first and second controlled terminals providing first and second nodes, respectively;
- a second controlled switch having a second control terminal and third and fourth controlled terminals;
- means for connecting said second control terminal to said first node;
- a first capacitor having first and second electrodes;
- means for connecting said second node to said second electrode;
- means for providing a clock signal between said first electrode and said first node;

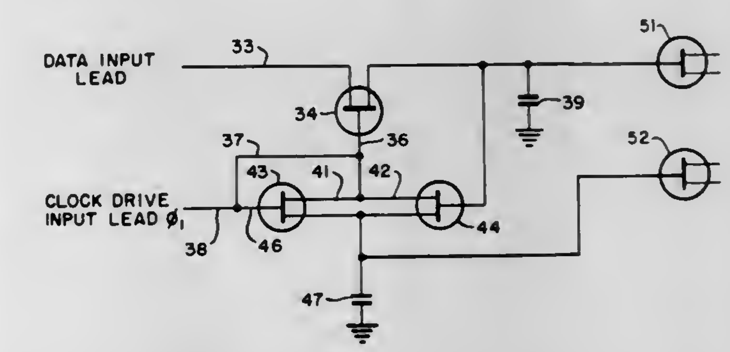

- means for applying said clock signal to said first control terminal;
- means for applying an information signal to said third controlled terminal;
- a second capacitor connected between said first electrode of said first capacitor and said fourth controlled terminal; and
- means for connecting said fourth controlled terminal to said gate of said field effect transistor.

4,065,680
COLLECTOR-UP LOGIC TRANSMISSION GATES
Lewis K. Russell, San Jose, Calif., assignor to Signetics Corporation, Sunnyvale, Calif.
Continuation of Ser. No. 487,756, July 11, 1974, abandoned. This application May 12, 1976, Ser. No. 685,503
Int. Cl.² H03K *19/40*
U.S. Cl. 307—214 **1 Claim**

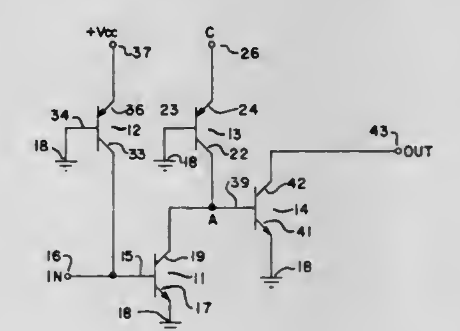

1. In an inverting bipolar logic gate of the type having an input, an output, gate control, supply and common terminals, a logic circuit having PNP and NPN conductivity type transistors including, a switching transistor, a source transistor having opposite conductivity from and associated with said switching transistor and having a spaced relationship thereto capable of injected carrier communication with said switching transistor, said transistors each having collector, base and emitter electrodes, said collector of the switching transistor connected to the output terminal, and defining a gate logic node, the base to the input terminal and the emitter to the common terminal, and wherein the collector of the source transistor is connected to the base of the switching transistor, the source transistor base is connected to common and the emitter is connected to the supply terminal,

and gate switching means connected between said gate logic node and said gate control input comprising solely a single gate switching transistor having collector, base and emitter electrodes having an opposite conductivity from said switching transistor, the collector of said gate switching transistor being of differing conductivity from said

switching transistor collector and connected to said gate logic node, said base connected to the common terminal and said emitter to said gate control input wherein said gate switching transistor is responsive to first and second logic levels at said gate control input for driving said gate logic node to first and second states and causing the gate to assume open and closed states from input to output.

4,065,681
VOLTAGE STORAGE CIRCUIT USEFUL IN TELEVISION RECEIVER CONTROL APPLICATIONS
Billy Wesley Beyers, Jr., Greenfield, Ind., assignor to RCA Corporation, New York, N.Y.
Filed Nov. 10, 1976, Ser. No. 740,628
Int. Cl.² H03K *17/22, 17/60*
U.S. Cl. 307—246 **15 Claims**

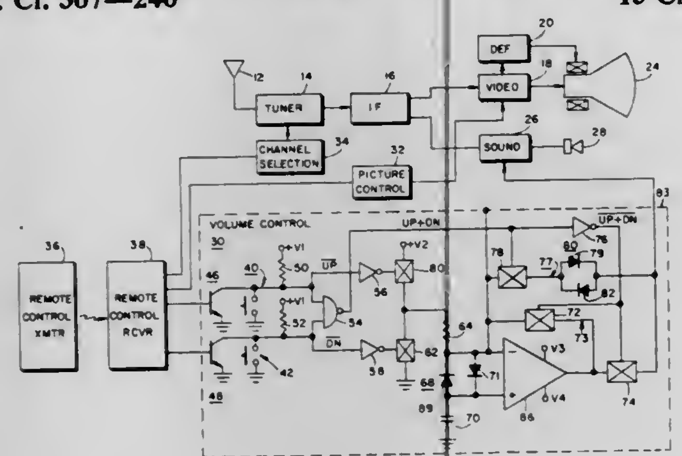

1. Apparatus for controlling a utilization means, comprising:
a source of fixed potential;
a circuit point;
means for selectively coupling said source of fixed potential to said circuit point;
capacitive means for storing a DC control voltage;
DC impedance means for coupling said circuit point to said capacitive means to thereby develop said DC control voltage;
operational amplifier means having first and second input terminals and an output terminal, said DC impedance means being coupled between said first and second input terminals;
negative feedback means for coupling said output terminal to said first input terminal, the voltages developed at said first and second input terminals being maintained substantially equal when said negative feedback means couples said output terminal to said one of said first input terminals, and
first switching means included within said negative feedback means for selectively decoupling said output terminal from said first input terminal when said source of fixed potential is coupled to said circuit point.

4,065,682
LOGARITHMIC CONVERTER
Ronald C. Evans, Binghamton, N.Y., assignor to McIntosh Laboratory, Inc., Binghamton, N.Y.
Filed Mar. 22, 1976, Ser. No. 669,134
Int. Cl.² H02M *7/00;* **G06G** *7/24;* **G01R** *19/04*
U.S. Cl. 307—261 **14 Claims**

1. A peak rectifying system for an AC signal comprising an amplifier of said signal, said amplifier having a bipolar output, a bipolr circuit including a first transistor and a second transistor, means biasing said transistors approximately to cut-off, a storage capacitor directly connected
to an electrode of said first transistor in a collector-emitter circuit thereof,
to a corresponding electrode of said second transistor in a collector-emitter circuit thereof, and
to a ground, a source of constant current of one polarity connected to both said corresponding electrodes, and a source of voltage of polarity opposite said one polarity connected to other electrodes in collector-emitter circuits

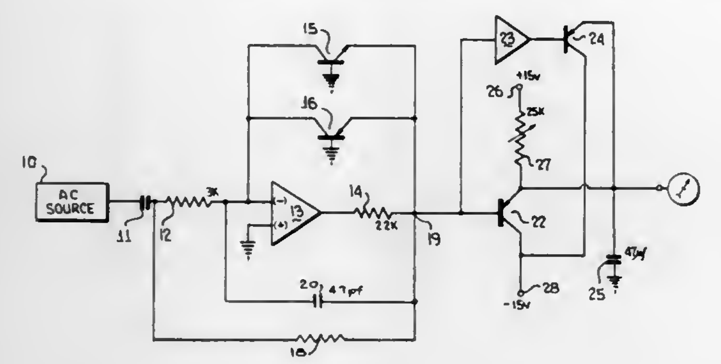

of said transistors, whereby a peak rectified signal is available at said storage capacitor.

4,065,683
CIRCUITRY FOR INDUSTRIAL LOGIC SYSTEMS
Geoffrey Clarke, Blunsdon, near Swindon, England, assignor to Square D Company, Park Ridge, Ill.
Continuation of Ser. No. 478,486, June 12, 1974, abandoned. This application Apr. 19, 1976, Ser. No. 678,287
Int. Cl.² H03K *17/60, 19/08;* **H02H** *3/00*
U.S. Cl. 307—264 **5 Claims**

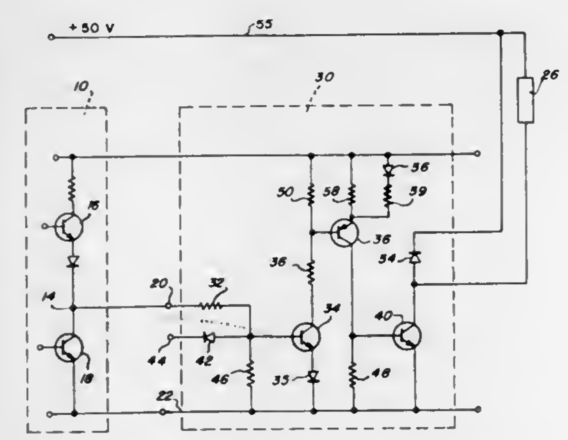

1. A device for use in an industrial logic system for translating a low level input signal into a high level output signal comprising:
A. a logic gate adapted to both sink current and source an output signal less than 7 milli-watts, the gate including:
1. a first transistor having an emitter and a collector;
2. a second transistor having an emitter and a collector, the collector being connected to the emitter of the first transistor, the connection providing the output signal of the logic gate when the first transistor is conducting and the second transistor is not conducting; and
3. a first voltage supply connected across the collector of the first transistor and the emitter of the second transistor;
B. a second voltage supply;
C. a load; and
D. an output driver connected in series with the load across the second voltage supply, the driver including:
1. a third transistor connected to be controlled only by the output signal from the logic gate by having a base connected in a base circuit to the output of the logic gate so that the third transistor is in a non-conductive state when the logic gate is sinking current or when the base circuit is inadvertently open or grounded;
2. an input terminal connectible to a common rail through a diode to clamp the base circuit and make the third transistor non-conductive and thus non-responsive to the output of the logic gate;
3. a resistor connected to the third transistor to reduce the input impedance of said third transistor and thereby increase the sensitivity of the third transistor; and

4. means for responding to the conduction of the third transistor to cause the ouput driver to emit an output signal greater than 100 watts and responsive to non-conduction of the third transistor to prevent the output from emitting an output signal when the logic gate does not source a current.

4,065,684
PIEZOELECTRIC RESONATOR FOR TIMEPIECES AND METHOD FOR MAKING SAME
Jean Hermann, Neuchatel, and Hubert Choffat, St. Blaise, both of Switzerland, assignors to Centre Electronique Horloger S.A., Neuchatel, Switzerland
Filed Aug. 4, 1975, Ser. No. 601,634
Claims priority, application Switzerland, Aug. 7, 1974, 10835/74
Int. Cl.² H01L *41/04*
U.S. Cl. 310—351 **3 Claims**

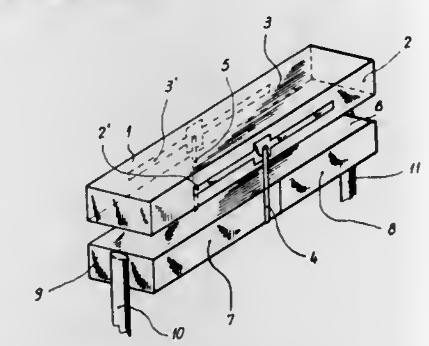

1. A piezoelectric resonator comprising an elongated piezoelectric crystal rod that oscillates in length-extension, a casing within which said rod is disposed and a first pair of conductive wires secured tangentially to the middle of opposite long faces of the rod and extending perpendicular to the length of the rod, the wires supporting the rod in the casing being straight and of a length substantially less than the length of the crystal rod, the faces of the rod to which the wires are secured being partially metallized, a support constituted by an elongted piece of ceramic material of about the same size and shape as and parallel to the crystal rod, said wires of the said first pair of wires being secured at their one ends to said support and at their other ends to said crystal rod, and a second pair of conductive wires secured to the ends of the support and supporting the support and rod in the casing, the last-named wires extending in sealed relationship through the casing to the exterior of the casing, the side faces of the support being metallized on the one hand between one wire of the first pair of wires and one wire of the second pair of wires, and on the other hand between the other wire of the first pair of wires and the other wire of the second pair of wires thereby to complete electrically conductive paths between the metallized area on one side of the rod and one of the wires of the second pair of wires, and the metallized area on the other side of the rod and the other wire of the second pair of wires.

4,065,685
INTERPOLATING STEP MOTOR SYSTEM WITH REDUCTION DRIVE INTERFACE
Harold R. Newell, South Newbury, N.H., assignor to Mesur-Matic Electronics Corporation, Salem, Mass.
Filed Aug. 10, 1976, Ser. No. 713,310
Int. Cl.² H02K *37/00*
U.S. Cl. 310—49 R **10 Claims**

1. In combination with first and second step motors each having field and rotor elements and energizing means for simultaneously stepping both of the motors, means for effecting advancement of the rotor element of said first step to an interpolated position between steps, comprising reduction gear means drivingly connecting the rotor element of said second step motor to the field element of said first step motor for stepped advancement of the field element through steps

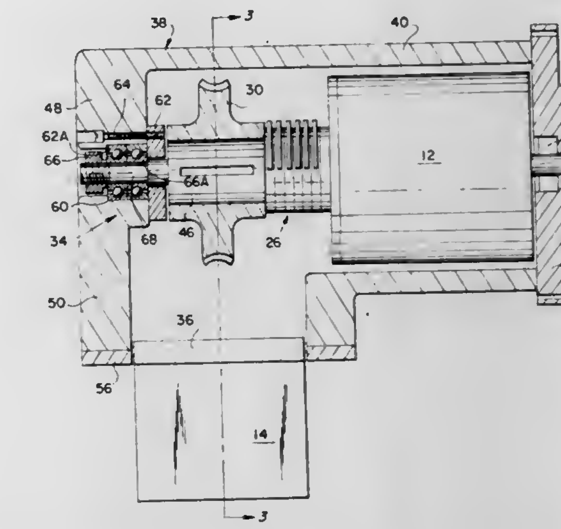

smaller than the steps through which the rotor elements are advanced.

4,065,686
MULTIPHASE FULL-WAVE RECTIFIER ASSEMBLY
Alan Raymond Moore, Aldridge, England, assignor to Lucas Industries Limited, Birmingham, England
Filed Nov. 22, 1976, Ser. No. 744,173
Claims priority, application United Kingdom, Dec. 20, 1975, 52464/75
Int. Cl.² H02K *11/00*
U.S. Cl. 310—68 D **19 Claims**

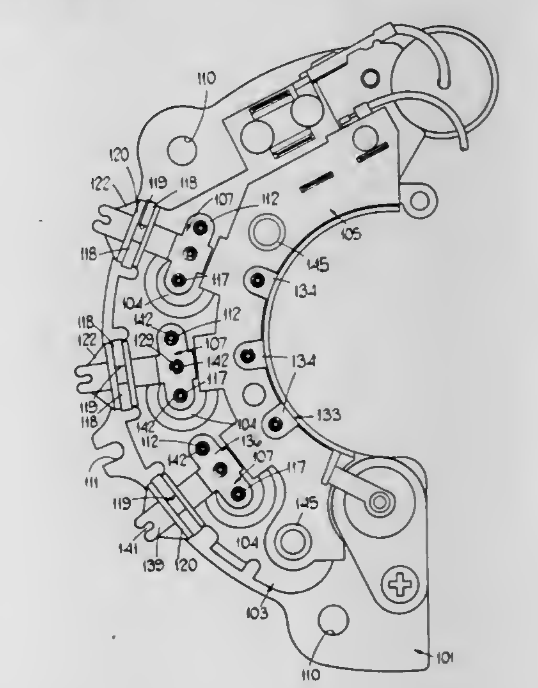

1. A multiphase full-wave rectifier assembly comprising a first plate, a first set of diodes carried by said first plate, a second plate disposed substantially parallel to said first plate and having holes therein, a terminal of each diode of said first set extending through a respective one of the holes in said second plate, a second set of diodes carried by said second plate, an electrical connector electrically interconnecting said terminal of each said diode of said first set with a respective diode of said second set and being adapted for connection to a respective phase to be rectified, a support structure including an electrically insulating body having recesses therein, a third set of diodes disposed in the recesses respectively, the recesses being shaped so as to hold the diodes of said third set in predetermined relative positions, each said diode of said third set having a body and a pair of terminals, one terminal of each said diode of said third set being electrically connected with a respective one of said electrical connectors, and a common

electrical connector electrically connecting together the other terminals of said diodes of said third set.

4,065,687
SUPERSONIC VIBRATOR WITH MEANS FOR DETECTING VIBRATING SPEED
Shoji Mishiro, Tokyo, Japan, assignor to Taga Electric Co., Ltd., Tokyo, Japan
Continuation of Ser. No. 497,282, Aug. 14, 1974, abandoned, which is a continuation of Ser. No. 345,530, March 28, 1973, Pat. No. 3,843,897. This application Apr. 28, 1976, Ser. No. 680,983
Int. Cl.[2] H01L *41/04*
U.S. Cl. 310—314 1 Claim

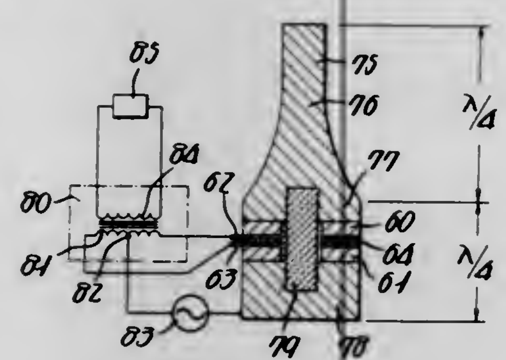

1. A supersonic vibrator comprising:
a first cylindrical metallic resilient body,
a second cylindrical metallic resilient body,
first, second, third and fourth annular electrostrictive elements disposed between the first and second cylindrical metallic resilient bodies, the first annular electrostrictive element contacting the first cylindrical metallic resilient body and the fourth annular electrostrictive element contacting the second cylindrical metallic resilient body,
a first annular electrode plate disposed between the first and second annular electrostrictive elements,
a second annular electrode plate disposed between the second and third annuular electrostrictive elements,
a third annular electrode plate disposed between the third and fourth annular electrostrictive elements,
means joining the first and second cylindrical metallic resilient bodies for tightening the first, second, third and fourth annular electrostrictive elements,
means electrically connecting the second annular electrode plate to the second cylindrical metallic resilient body,
an energizing power supply having one electrode connected to the second cylindrical metallic resilient body and other electrodes connected to the first and third annular electrode plates,
the axial length of the first cylindrical metallic resilient body being substantially one-fourth of the wavelength of the intrinsic resonant frequency of the vibrator;
the axial length of the second cylindrical metallic resilient body when combined with the axial lengths of the first, second, third and fourth annular electrostrictive elements and the axial lengths of the first, second and third annular electrode plates being substantially one-fourth of the wavelength of the intrinsic resonant frequency of the vibrator,
means for detecting the difference of the current flowing from the first annular electrode plate to the first and second annular electrostrictive elements and the current flowing from the third annular electrostrictive element to the third and fourth annular electrostrictive elements as representative of the vibrating speed of the vibrator.

4,065,688
HIGH-PRESSURE MERCURY-VAPOR DISCHARGE LAMP HAVING A LIGHT OUTPUT WITH INCANDESCENT CHARACTERISTICS
William A. Thornton, Cranford, N.J., assignor to Westinghouse Electric Corporation, Pittsburgh, Pa.
Filed Mar. 28, 1977, Ser. No. 782,279
Int. Cl.[2] H01J *61/20, 61/34, 61/48*
U.S. Cl. 313—25 11 Claims

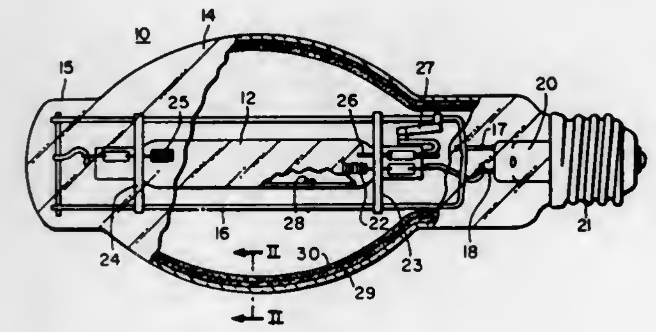

1. A high-pressure mercury-vapor discharge lamp which has a light output that is modified to have color-rendering characteristics similar to those of an incandescent light source, said lamp comprising:
an arc tube that contains mercury and an ionizable fill gas,
a light-transmitting outer envelope surrounding and spaced from said arc tube,
means supporting said arc tube in predetermined position within said outer envelope and providing an electric circuit for connecting the arc tube to a power source,
means carried by said outer envelope for converting radiations of selected wavelength which are produced by said arc tube into selected radiations of longer wavelength and thereby modifying the color-rendering characteristics and chromaticity of the light generated by said arc tube when the lamp is energized,
said modifying means comprising (a) a first layer of luminescent material that is disposed on the inner surface of said outer envelope and absorbs radiation in the blue-violet region of the spectrum which is produced by the arc tube and converts such radiations into green and red radiations, and (b) a second layer of luminescent material that extends over said first layer and absorbs ultraviolet radiations produced by said arc tube and converts such radiations into red radiations, said second layer of luminescent material being transmissive of blue-violet radiations produced by the arc tube so that such radiations can interact with and be converted by said first layer of luminescent material.

4,065,689
DUAL FILAMENT X-RAY TUBE
Viktor W. Pleil, Wheaton, Ill., assignor to Picker Corporation, Cleveland, Ohio
Continuation-in-part of Ser. No. 528,156, Nov. 29, 1974, abandoned. This application Dec. 31, 1975, Ser. No. 645,784
Int. Cl.[2] H01J *35/10*
U.S. Cl. 313—56 9 Claims

1. An X-ray tube comprising:
a. a cathode structure including means for controllably emitting first and second beams of electrons;
b. an anode structure which defines a target for emitting X-rays in response to the impingement of electrons;
c. high tension means for applying a tube operating voltage potential between the anode structure and the cathode structure to cause electrons from the respective beams to flow to and impinge upon the target region; and,
d. said cathode structure including means for focusing the first and second beams of electrons onto first and second

non-uniformly distributed spots of substantially the same size and configuration on said target and in partially over-

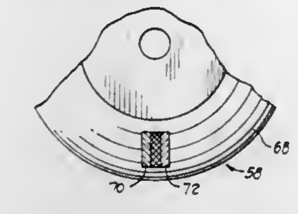

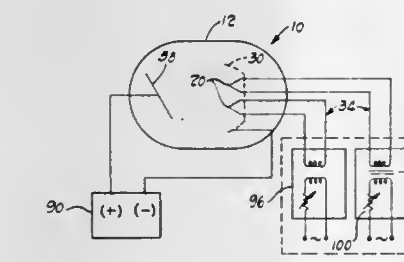

lapping relation to thereby provide a relatively uniform distribution of electrons striking the target area.

4,065,690
X-RAY TUBE WITH A CONTROL GRID
Shigeo Maeyama, Fujisawa, Japan, assignor to Tokyo Shibaura Electric Co., Ltd., Kawasaki, Japan
Filed Jan. 26, 1977, Ser. No. 762,815
Claims priority, application Japan, Jan. 29, 1976, 51-8153[U]
Int. Cl.[2] H01J *35/00*
U.S. Cl. 313—57 2 Claims

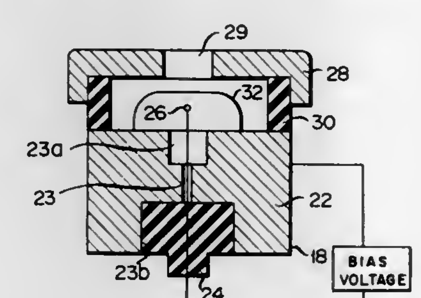

1. A grid-equipped X-ray tube including a cathode having a cathode body one end of which is hermetically sealed to one end of an air-sealed envelope and on the other end of which a focusing electrode means is mounted, an anode one end of which is hermetically sealed to the other end of the envelope and on the other end of which a target facing the focusing electrode means is mounted, and a control grid disposed between the cathode and the anode, the improvement in which said focusing electrode means comprises a first focusing electrode having a stepped through bore, a filament insulatingly mounted on the first focusing electrode and part of which extends out through the bore, a second focusing electrode mounted on the first focusing electrode through an insulator and having an opening toward which the filament extends, the second focusing electrode having a potential level the same with that of the filament electrode, and said control grid disposed between the first focusing electrode and the second focusing electrode to cover the filament and each end of which is electrically connected to the first focusing electrode.

4,065,691
CERAMIC LAMP HAVING ELECTRODES SUPPORTED BY CRIMPED TUBULAR INLEAD
Charles I. McVey, Shaker Heights, Ohio, assignor to General Electric Company, Schenectady, N.Y.
Filed Dec. 6, 1976, Ser. No. 747,552
Int. Cl.[2] H01J *61/22, 61/28, 61/30, 61/36*
U.S. Cl. 313—174 8 Claims

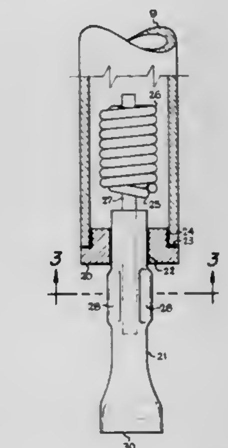

1. An electric discharge lamp comprising:
a tubular light-transmitting ceramic envelope having closures and thermionic electrodes in its ends and containing an ionizable filling,
a closure and electrode assembly at one end of said envelope comprising a tubular metal inlead conductor hermetically sealed to said envelope and extending externally thereof, and an electrode located within the envelope mounted on a metal shank which projects into the tubular inlead and which is locked in place by crimping the inlead about it at a place outside the envelope, said inlead being closed at its outer end and said shank ending short of said closed end and receiving its entire support through said crimping.

4,065,692
SPARK GAP ASSEMBLY FOR VOLTAGE SURGE ARRESTERS
Joseph C. Osterhout, Bloomington, Ind., assignor to Westinghouse Electric Corporation, Pittsburgh, Pa.
Filed Feb. 26, 1976, Ser. No. 661,593
Int. Cl.[2] H01J *17/00, 21/00*
U.S. Cl. 313—325 4 Claims

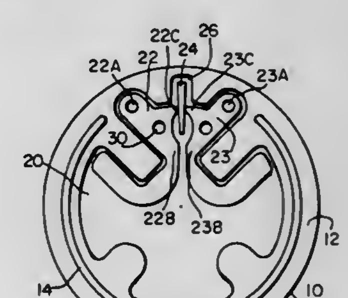

1. A spark gap assembly comprising: a stack of insulating plates, first, second and third plates of said stack having opposing first and second surfaces with said first surface having a raised portion and said second surface having a recess, said raised portion of said first surface of said first plate located within said recess of said second surface of said second plate, said raised portion of said first surface of said second plate located within said recess of said second surface of said third plate; a pair of electrodes disposed on and affixed to individual ones of said stack of plates on a single one of said surfaces thereof and defining a spark gap between said pair of electrodes; said pair of electrodes having a piece of ionizing material disposed therebetween, said piece of ionizing material

being affixed within a recess of said surface to which said electrodes are affixed, said pair of electrodes having a first pair of opposing points contacting said preionizer and a second pair of opposing portions that face each other at a location removed from said preionizer, said second pair of portions being spaced a predetermined distance defining a spark gap between said electrodes.

4,065,693
CATHODE RAY TUBE COLOR SELECTION ELECTRODE MOUNT
Johannes Henricus Nicolaas Gijrath, Eindhoven, Netherlands, assignor to U.S. Philips Corporation, New York, N.Y.
Filed Sept. 10, 1976, Ser. No. 722,097
Claims priority, application Netherlands, Sept. 18, 1975, 7510970
Int. Cl.² H01J *29/07, 29/02*
U.S. Cl. 313—406 **4 Claims**

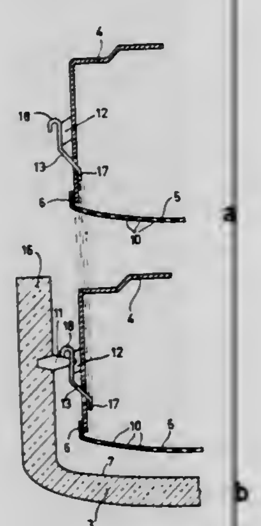

1. A cathode ray tube for displaying color images, comprising an evacuated envelope having a display window portion, a display screen on said window portion, means for generating at least two electron beams for energizing said screen, said display window portion forming part of the wall of said envelope and being provided with inwardly projecting studs positioned on an upright edge portion thereof, a color selection electrode adjacent to and spaced from the display screen, a frame supporting the color selection electrode and having side wall portions extending substantially parallel to said upright edge portions, strip shaped resilient elements having one end thereof secured to the frame and having their free other ends extending away from the frame in the direction of the studs, the free end of each of said resilient elements being provided with an aperture for engaging said studs and comprising a lug portion limiting movement of said free end in a direction transverse to the stud and comprising a second portion projecting through an aperture in that part of the supporting frame which extends substantially parallel to the upright edge, said secnd portion being biased to press against the inside of said supporting frame when the color selector electrode is not mounted in the cathode ray tube.

4,065,694
REGENERATIVE-CYCLE INCANDESCENT LAMP CONTAINING SNI_4 ADDITIVE
Avinash D. Kulkarni, Montclair, N.J., assignor to Westinghouse Electric Corporation, Pittsburgh, Pa.
Continuation-in-part of Ser. No. 552,830, Feb. 25, 1975, abandoned. This application Dec. 22, 1975, Ser. No. 643,277
Int. Cl.² H01K *1/50*
U.S. Cl. 313—222 **6 Claims**

1. A regenerative-cycle incandescent lamp of elongated configuration that is adapted to be operated at a selected wattage and have a nominal design life in excess of 1000 hours when operated at said wattage, said lamp comprising;

a sealed envelope of light-transmitting material that contains a coiled filament which is composed essentially of tungsten and is supported in longitudinally-extending position within said envelope,

a pair of spaced conductor means extending through said envelope and connected to said filament,

an inert gas within said envelope at a pressure of at least 1000 torr, and

means in said envelope for initiating and sustaining a tungsten-iodine cycle within the lamp during the operation

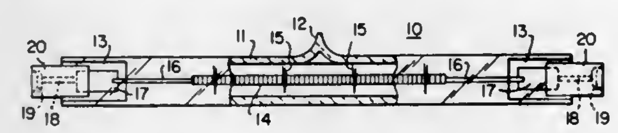

thereof which inhibits discoloration of the envelope by vaporized tungsten even when the lamp is operated in a non-horizontal or vertical position at said selected wattage, said means consisting essentially of SnI_4 in an amount sufficient to provide from about 0.05 to 0.21 micromole per ml. of lamp volume of elemental iodine within the envelope when the lamp is operated at said selected wattage and the SnI_4 is subjected to the heat and radiant energy generated by the energized incandescent filament.

4,065,695
CATHODE RAY TUBE SCREEN HAVING CHARGE-RETAINING LAYER APERTURED IN REGISTRATION WITH COLOR ELEMENTS
Jan van der Waal, Eindhoven, Netherlands, assignor to U.S. Philips Corporation, New York, N.Y.
Filed Jan. 30, 1976, Ser. No. 653,921
Claims priority, application Netherlands, Apr. 11, 1975, 7504324
Int. Cl.² H01J *29/32, 31/20*
U.S. Cl. 313—466 **2 Claims**

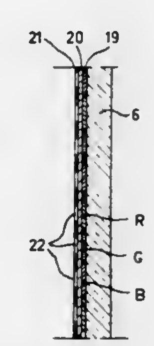

1. A cathode-ray tube for displaying color pictures comprising a shadow mask having a large number of apertures, a display screen having a large number of regions luminescing in different colors, and electron gun means to generate a number of electron beams, each electron beam being arranged to impinge on luminescent regions of a respective color by means of the apertures in the shadow mask, said display screen being covered on the side facing said electron gun means with a continuous thin metal layer, said metal layer on the side facing said electron gun means being provided with an electron-absorbing and charge-retaining layer having a low electrical conductivity and having apertures which are in registration with the luminescent regions.

4,065,696
CATHODE-RAY TUBE
Bernard L. Steierman, Toledo, Ohio, assignor to Owens-Illinois, Inc., Toledo, Ohio
Division of Ser. No. 799,902, Feb. 17, 1969. This application Mar. 29, 1974, Ser. No. 456,564
Int. Cl.² H01J *31/00*
U.S. Cl. 313—480 **9 Claims**

1. A cathode-ray tube comprising a glass funnel portion, a glass faceplate sealed thereto, a fluorescent screen on the inner surface of said faceplate, and an electron gun disposed within said sealed tube, said tube having the property of absorbing X-rays emitted from within the tube, at least one of said glass members being formed from a glass having as an essential ingredient an amount of yttrium oxide sufficient to impart to said glass member said property of absorbing said X-rays.

4,065,697
CATHODE-RAY TUBE
Bernard L. Steierman, Toledo, Ohio, assignor to Owens-Illinois, Inc., Toledo, Ohio
Filed Feb. 17, 1969, Ser. No. 799,902
Int. Cl.² H01J *31/00*
U.S. Cl. 313—480 **5 Claims**

1. A cathode-ray tube comprising a glass funnel portion, glass faceplate sealed thereto, a fluorescent screen on the inner surface of said faceplate, and an electron gun disposed within said sealed tube, at least said faceplate being formed from a soda-potash-barium or a soda-potash-lead-barium glass, said glass containing cerium oxide in an amount not exceeding 1 weight percent to protect against X-ray browning and also containing as an essential ingredient up to 20 weight percent SrO, sufficient to impart improved absorption of X-radiation emitted from within the tube in the range of wavelengths between about 0.5 and 0.7A, said glass having a fiber softening point of from about 625° to about 700° C and an annealing point of from about 425° to about 525° C.

4,065,698
GAS DISCHARGE DISPLAY DEVICE INCLUDING PLURALITY OF DISCHARGE PANEL UNITS WITH INTERMEDIATE LIGHT ABSORBING PLATES
Kenichi Owaki; Shizuo Ando, and Norihiko Nakayama, all of Kobe, Japan, assignors to Fujitsu Limited, Kawasaki, Japan
Continuation of Ser. No. 316,020, Dec. 18, 1972, abandoned. This application Sept. 2, 1976, Ser. No. 719,700
Int. Cl.² H01J *61/35, 61/42*
U.S. Cl. 313—489 **2 Claims**

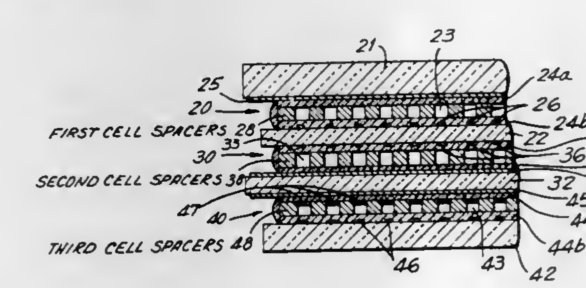

1. A gas discharge display device having a display surface side, said gas discharge display device comprising

a plurality of intermediate plates having light absorbing characteristics, each of the intermediate plates having a pair of spaced opposite surfaces;

a plurality of discharge panel units in stacked relation to each other, each of the intermediate plates being positioned between a corresponding one of the discharge panel units and a corresponding next-adjacent one of the discharge panel units, each of the intermediate plates having one electrode on one of the surfaces thereof for addressing one of the discharge panel units and another electrode on the other of the surfaces thereof for addressing another of the discharge panel units, each of the discharge panel units having an envelope including an intermediate plate, a discharge sustaining gas therein, a discharge space formed therein, a rear side wall in the discharge space and addressable row and column electrodes on opposite sides of the discharge space, at least one of which is on the intermediate plate; and

phosphorescent material on the rear side wall in the discharge space on one of the discharge panel units on the display surface side of the device, the phosphorescent material emitting visible light rays upon excitation by discharged light from the discharge panel units whereby the phosphorescent material emits light at an intensity proportional to the volume of light reaching said phosphorescent material from each of the discharge spaces through the intermediate plates.

4,065,699
CATHODE ASSEMBLY FOR TWO-DIMENSIONAL SCANNED GAS DISCHARGE DISPLAY PANEL
Albert W. Baird, III, Burlington, Mass., assignor to Beckman Instruments, Inc., Fullerton, Calif.
Filed Jan. 24, 1977, Ser. No. 761,931
Int. Cl.² H05B *37/00*
U.S. Cl. 315—169 TV **8 Claims**

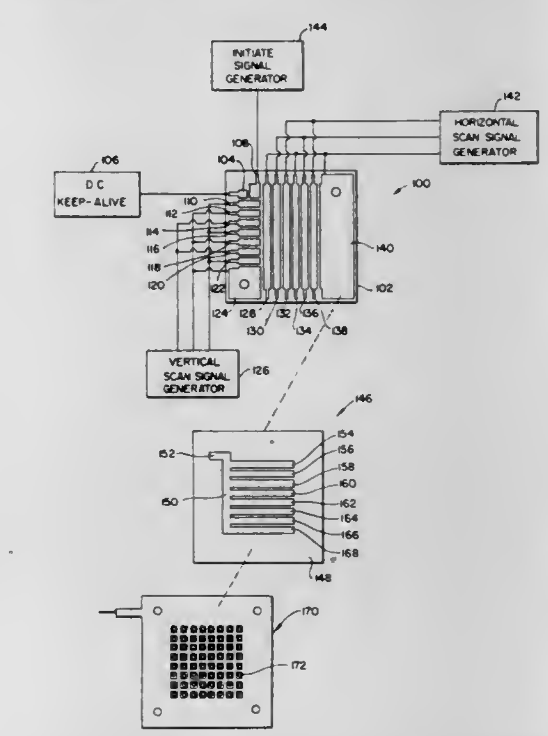

1. An improved cathode assembly for providing a two dimensional scan in gas discharge display apparatus comprising:

a. a plurality of first cathode elements disposed end to end in close adjacent spaced relationship along a first path;

b. a plurality of second cathode elements disposed side by side in parallel spaced relationship adjacent one side of said first path of said first cathode elements;

c. a plurality of insulating spacers disposed on said second cathode elements, said spacers each extending from between adjacent ones of said first cathode elements across said plurality of second cathode elements to form a plurality of channels from said first cathode elements across said second cathode elements;

d. means for causing an ionizable gas adjacent one of said first cathode elements to ionize;

e. first scan signal generator means operably connected to said first cathode elements for sequentially applying an electrical potential to said first cathode elements to cause the ionization to move from adjacent said one of said first cathode elements to the next adjacent of said first elements and thence to the next adjacent of said first elements seriatim until the ionized gas is disposed adjacent a selected one of said first cathode elements;

f. second scan signal generator means operably connected to said second cathode elements for sequentially applying an electrical potential to said second cathode elements to cause the ionization to move from adjacent said selected

one of said first cathode elements to the portion of the next adjacent of said second cathode elements disposed within one of said channels and thence to the next adjacent of said second cathode elements within said channel seriatim until the ionized gas is disposed adjacent a selected one of said second cathode elements.

4,065,700
D. C. POWERED STROBE LIGHT
Theodore Liebman, 8201 Henry Ave., Philadelphia, Pa. 19128
Filed July 6, 1976, Ser. No. 702,917
Int. Cl.² H05B *37/00*
U.S. Cl. 315—241 R **4 Claims**

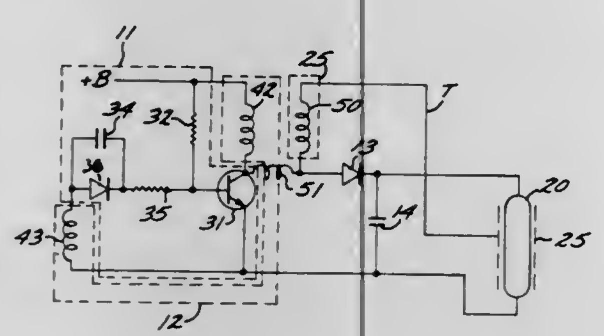

1. A strobe light circuit powered by a source of direct current, comprising:
oscillating means connected for excitation to said direct current source;
transformer means coupled to said oscillating means and including an additional winding connected between the ends of the primary and secondary thereof;
a discharge tube connected by its anode to said end of said secondary of said transformer means; and
trigger means connected between the other end of said secondary and said discharge tube.

4,065,701
ELECTRODELESS LIGHT SOURCE WITH REDUCED HEAT LOSSES
Paul O. Haugsjaa, Acton, and Alfred E. Feuersanger, Framingham, both of Mass., assignors to GTE Laboratories Incorporated, Waltham, Mass.
Filed July 14, 1976, Ser. No. 705,327
Int. Cl.² H05B *41/16, 41/24*
U.S. Cl. 315—248 **9 Claims**

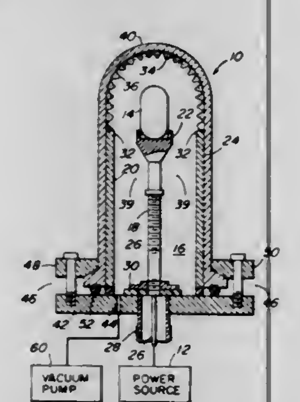

1. In an electrodeless light source having a source of power at a high frequency, an electrodeless lamp having an envelope made of a light-transmitting material and a volatile fill material emitting light upon breakdown and excitation and a termination fixture coupled to the source, the fixture having an inner conductor and an outer conductor disposed around the inner conductor, the lamp being disposed in the region of the first ends of the conductors and the source being coupled to the second ends of the conductors so that the lamp forms a termination load for the source, the fixture including means for matching the impedance of the lamp during breakdown and excitation to the output impedance of the source, an improvement comprising means for restricting the flow of heat from the lamp envelope to the region between the conductors.

4,065,702
DRIVE SYSTEM FOR HIGH INERTIA LOAD
Daniel Locker, 18 Bialik Street, and Moshe Miller, Sanhedria Murhevet 124/5, both of Jerusalem, Israel
Filed Mar. 23, 1976, Ser. No. 669,664
Claims priority, application Israel, July 31, 1975, 47843
Int. Cl.² H02K *7/02*
U.S. Cl. 318—161 **10 Claims**

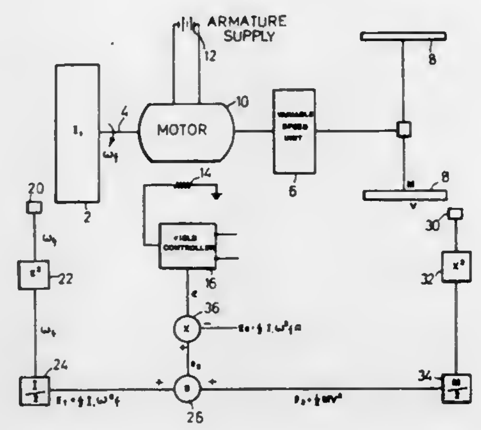

1. A drive system comprising: a flywheel; a prime-mover for setting the flywheel into motion and for maintaining the motion thereof during the operation of the drive system; a driven device driven by the flywheel; a bidirectional variable speed unit coupling the flywheel to the driven device for controlling the speed thereof during the operation of the drive system such that when the driven device is accelerating it draws energy from the flywheel, and when it is decelerating it returns energy to the flywheel; and a control system automatically controlling the prime-mover to supply sufficient energy to the flywheel to make up or losses during the operation of the drive system said control system being an energy-responsive one and including: first energy measuring means for continuously measuring the energy of the flywheel; second energy measuring means for continuously measuring the energy of the driven device; summing means for summing the two measurements and for subtracting the sum from a reference value to produce a control signal corresponding to the difference between said sum and reference values; and control means for controlling the prime-mover in accordance with said control signal.

4,065,703
PULSE EXCITATION TORQUE AMPLIFIER
David W. Schlicher, Minneapolis, and Liboslav Fabian, Brooklyn Park, both of Minn., assignors to Electric Machinery Mfg. Company, Minneapolis, Minn.
Filed Nov. 22, 1976, Ser. No. 743,695
Int. Cl.² H02P *1/46*
U.S. Cl. 318—176 **16 Claims**

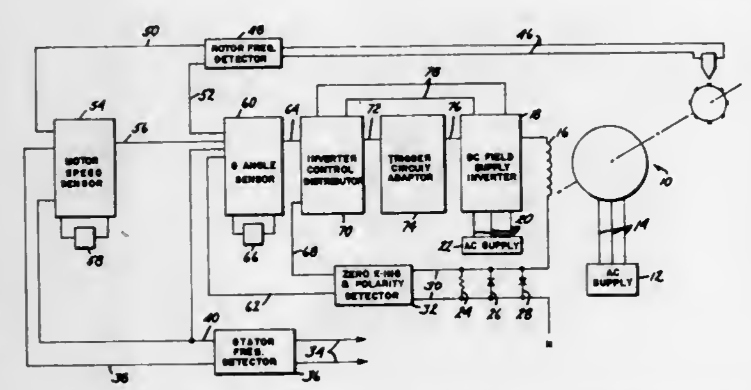

1. A torque amplifier control circuit for pulling a synchronous motor rotor having a field winding with the stator rotating field comprising:

means for detecting motor speed and generating a first signal representative thereof;
means for detecting the zero crossings of the induced field current waveform and generating a second signal representative of said zero crossings;
means for determining the load angle of the motor and generating a third signal representative thereof; and
means responsive to said first, second and third signals for applying a DC voltage to said field winding at said zero crossings when said motor speed exceeds a predetermined value, and removing said DC voltage at predetermined load angles whereby said motor is pulled into synchronism within several rotor slip cycles.

4,065,704
STATIC SPEED CONTROL CIRCUIT FOR POLYPHASE INDUCTION MOTORS
Francis M. Bailey, Roanoke, Va., assignor to General Electric Company, New York, N.Y.
Filed Sept. 10, 1976, Ser. No. 722,190
Int. Cl.² H02P *5/36*
U.S. Cl. 318—237 **18 Claims**

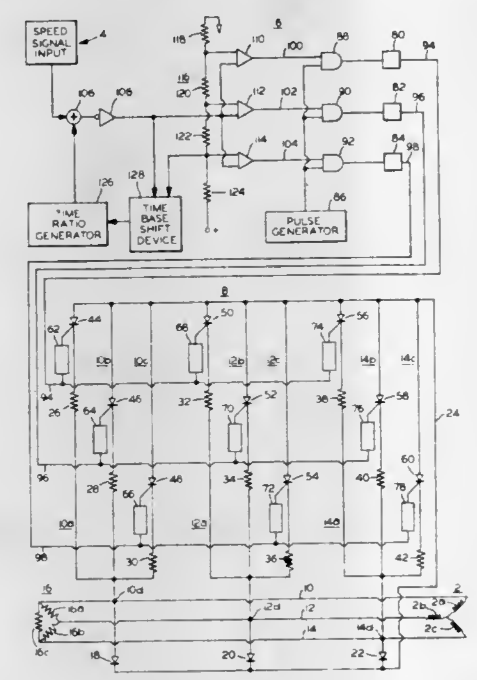

1. A rotor current control circuit adapted to modify the speed of a wound rotor motor by modifying the effective resistance of a polyphase network comprising a plurality of interconnected phase circuits adapted to be connected to the multiple phase rotor windings of the motor, comprising:
a. each of said phase circuits comprising a plurality of parallel connected series networks;
b. each of said series networks comprising resistance means and thyristor means connected to be self-commutated by the phase signals induced in the phase windings of the rotor windings;
c. a source of speed control signal whose magnitude is representative of the desired speed of said wound rotor motor;
d. control means comprising an input coupled to said source, and a plurality of outputs;
e. gating means coupled from each of one of said outputs to gate on the thyristor means in a specified one of said series networks of each phase circuit; and
f. said control means being constructed to sequentially produce signals on consecutive ones of said outputs responsive to magnitude changes of said speed control signal representative of calls for increasing motor speed to consecutively gate on the thyristor means of additional ones of said parallel connected networks of each phase circuit so that the resistance means of additional ones of said parallel connected series networks are inserted in parallel in each phase circuit.

4,065,705
SCR CONTROLLED UNIVERSAL MOTOR
William R. Hicks, Spencerport, and Homer R. Miller, Rochester, both of N.Y., assignors to General Electric Company, Bridgeport, Conn.
Filed Mar. 1, 1976, Ser. No. 662,959
Int. Cl.² H02P *7/08*
U.S. Cl. 318—245 **10 Claims**

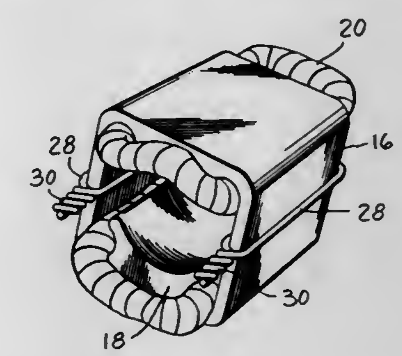

1. In an SCR circuit controlled universal motor, means for providing smooth speed control at all speed settings comprising,
a series wound stator field in said motor, and
at least one closed conductor loop of wire encircling the stator magnetic flux path.

4,065,706
BRUSHLESS D.C. MOTOR
Alexander Benett Gosling, and Barrie Ewart Mealing, both of Cambridge, England, assignors to Danfoss A/S, Nordborg, Denmark
Filed July 6, 1976, Ser. No. 702,493
Claims priority, application Germany, June 18, 1975, 2527041
Int. Cl.² H02K *29/00*
U.S. Cl. 318—254 **6 Claims**

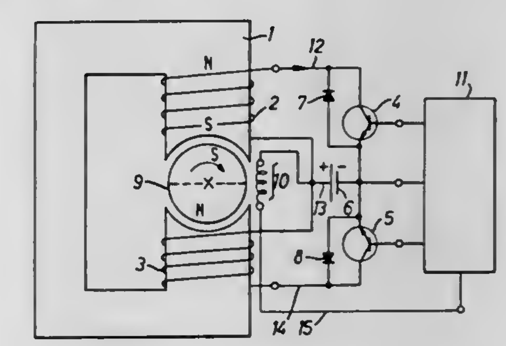

1. A brushless self-starting D.C. motor assembly comprising, a rotor having a permanent magnet providing a premagnetized rotor field, a stator and stator windings, a D.C. source, electrically controllable switch means between said source and said winding, position sensing coil means adjacent said rotor and having a core which is at least partially ferrite and which is saturatable by said rotor field at a predetermined position of said rotor to provide a control signal, switch control means between said coil means and said switch means for receiving said signal and actuating said switch means, and auxilliary magnetic means for establishing a static magnetic field distribution in which said stator is displaced an acute angle from a dead center position relative to said stator.

4,065,707
SAFETY MOTOR CONTROL MEANS FOR AN ELECTRICALLY DRIVEN MACHINE
Phillip R. Becker, 3830 Ironwood Place, Landover, Md. 20785
Filed Dec. 17, 1975, Ser. No. 641,775
Int. Cl.² H02P *1/22*
U.S. Cl. 318—285 **10 Claims**

1. In a safety machanism for a machine of the type which comprises:

a working mechanism to be operated intermittently by an electric drive motor running continuously in one direction to perform a predetermined cycle of operations;
manual switch means to connect said drive motor to an electrical source;
a mechanical clutch mechanism adapted to be engaged for transmitting motive power from said drive motor while running in said one direction to the working mechanism to initiate a cycle of said operations;
said clutch mechanism including clutch release means actuated when the clutch is engaged and as a result of further rotation in said one direction to automatically disengage the clutch mechanism at the completion of a single cycle of said operations;
said clutch mechanism including manual tripping means effective at any time to cause said clutch mechanism to become engaged, whether or not said drive motor is ener-

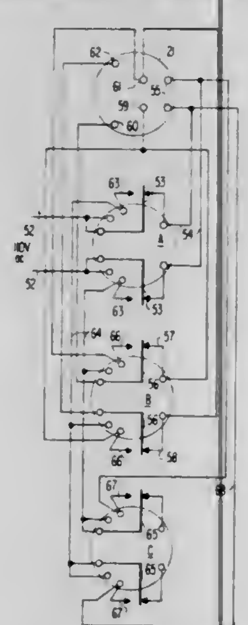

gized, and to remain engaged until said release means is actuated by said further rotation;
the tripping of said clutch mechanism when said drive motor is deenergized creating a safety hazard when the motor is subsequently energized;
the improvement comprising;
automatic switching means connected between said manual switch means and said drive motor to;
initially energize the motor for operation in the reverse direction to return the clutch mechanism to a condition normally existing prior to actuation of said release means;
subsequently energize the motor for operation in said one direction to actuate said release means, and;
continue energization of the motor for continuous operation in said one direction until deenergized by said manual switch means.

4,065,708
METHOD AND APPARATUS FOR DETERMINING STEPPING MOTOR PARAMETERS FROM INDUCED VOLTAGES

Hartmut Ulland, Sindelfingen; Volker Zimmermann, Schoenaich, and Rainer Zuehlke, Warmbronn, all of Germany, assignors to International Business Machines Corporation, Armonk, N.Y.
Filed Oct. 6, 1975, Ser. No. 620,097
Claims priority, application Germany, Oct. 5, 1974, 2447673
Int. Cl.² H02K *29/02*
U.S. Cl. 318—685 **8 Claims**

1. In combination with an electrical stepping motor having at least two bifilar winding pairs, means for determining speed and position values of said stepping motor comprising:
amplifying means for receiving induced voltages within the said bifilar windings of the said stepping motor in addition to applied voltages across and currents through the said bifilar windings;
rectifier means responsive to said induced voltages for providing an output signal proportional to the instantaneous speed values of the said stepping motor; and

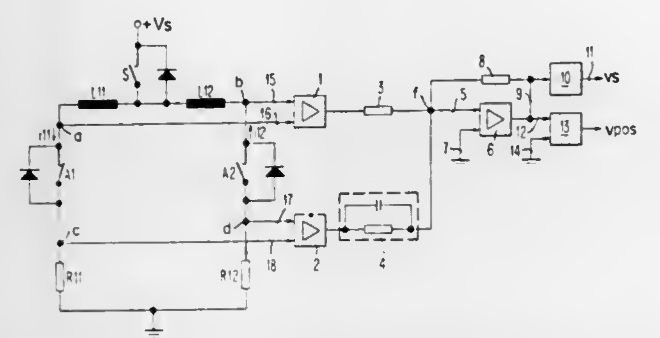

detector means responsive to said induced voltages for providing an output signal indicative of the position of the said stepping motor.

4,065,709
DIGITAL APPARATUS FOR SETTING THE VOLTAGE ACROSS A CAPACITOR

Robert A. Sliwa, Woodcliff Lake, and Edward J. Golden, Hamburg, both of N.J., assignors to The Bendix Corporation, Teterboro, N.J.
Filed Apr. 2, 1976, Ser. No. 673,333
Int. Cl.² F42C *11/04;* **G05F** *1/62;* **H02J** *15/00*
U.S. Cl. 320—1 **6 Claims**

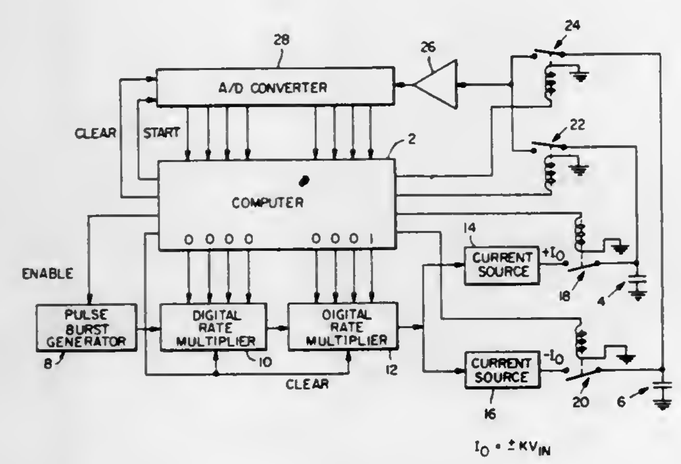

1. Digital apparatus for setting the voltage across capacitor means, comprising:
current source means for applying current pulses to the capacitor means, and initially applying a single current pulse to said capacitor means;
converting means for converting the analog voltage across the capacitor means provided in response to the single current pulse to a corresponding digital output;
computing means responsive to the digital output for computing the capacitance of the capacitor means and for providing a corresponding digital output;
a pulse source for providing a fixed number of pulses;
multiplying means connected to the computing means and to the pulse source for multiplying the fixed number of pulses from the pulse source by the digital output from the computing means and for providing a predetermined number of pulses; and
the current source means connected to the last mentioned means and responsive to the predetermined number of pulses therefrom for applying a corresponding number of current pulses to the capacitor means for setting the voltage across the capacitor means.

4,065,710
SUBSTITUTE POWER SUPPLY AND BATTERY CHARGER FOR BATTERY OPERATED APPARATUS

Bernard J. Zytka, 1492 Great Oak Drive, Pittsburgh, Pa. 15220
Continuation-in-part of Ser. No. 607,107, Aug. 25, 1975, abandoned, which is a continuation-in-part of Ser. No. 538,321, Jan. 3, 1975, abandoned. This application May 24, 1976, Ser. No. 689,581
Int. Cl.² H02J *7/00*
U.S. Cl. 320—2 **11 Claims**

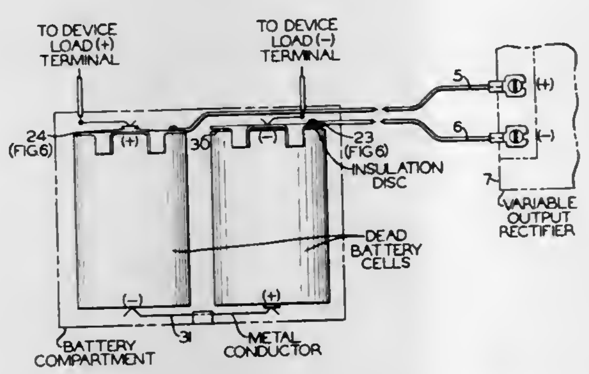

1. An external power supply arrangement for battery operated apparatus, comprising in combination,
a. a first and a second contactor element, each formed for contacting a battery terminal when inserted within said battery operated apparatus,
b. a connecting means for coupling said first and second contactor elements to opposite polarity terminals of an external direct current source, and
c. an insulating means formed for inserting within said battery operated apparatus adjacent one of said first and second contactor elements,
d. energy being supplied by said source to operate said apparatus or to charge the operating batteries within said apparatus as said insulating means is selectively placed adjacent a first or a second surface, respectively, of said one contactor element.

4,065,711
CHOPPER ASSISTED UNINTERRUPTIBLE POWER SUPPLY

Takao Kawabata, Amagasaki, Japan, assignor to Mitsubishi Denki Kabushiki Kaisha, Tokyo, Japan
Filed Sept. 21, 1976, Ser. No. 725,052
Claims priority, application Japan, Sept. 22, 1975, 50-114589
Int. Cl.² H02J *7/04*
U.S. Cl. 320—14 **8 Claims**

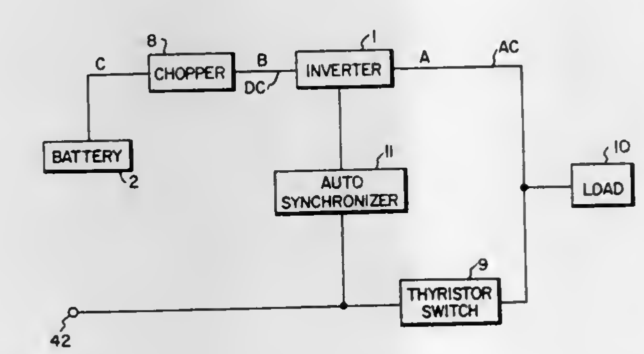

1. In an uninterruptible power supply (UPS) for supplying AC power to a load from an AC power supply and for supplying energy to a standby battery with energy converted through an inverter from the AC power supply in anticipation of a failure in the AC power supply, the combination of:
bilateral chopper means connected between said inverter and said battery for providing energy conversion in both directions between said battery and said inverter.

4,065,712
RAPID CHARGING SYSTEM AND METHOD FOR SEALED STORAGE CELLS

Pierre Godard, Livry-Gargan, and Robert Henri Lapuyade, Andilly, both of France, assignors to Societe des Accumulateurs Fixes et de Traction, France
Continuation of Ser. No. 193,301, Oct. 28, 1971, abandoned. This application Feb. 1, 1974, Ser. No. 438,654
Claims priority, application France, Oct. 30, 1970, 70.39139; Dec. 21, 1970, 70.46044
Int. Cl.² H02J *7/04*
U.S. Cl. 320—39 **6 Claims**

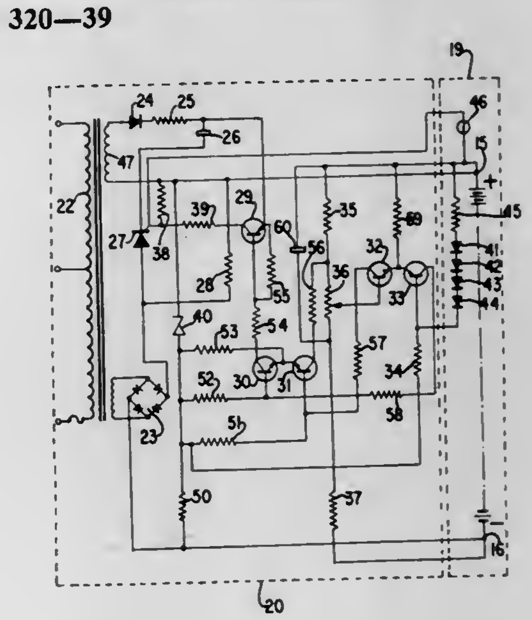

1. A d.c. charger for a sealed storage battery comprising a rapid charging circuit connected to terminals of said battery, a circuit breaker in said circuit, and a circuit for triggering said circuit breaker to effect cut-off condition of said circuit breaker and interruption of rapid charging of said battery, said last-named circuit including comparison means for permanently comparing the voltage across said battery terminals with a reference voltage during flow of said rapid charging current to the battery, means connected to said comparison means and to said circuit breaker for permanently supplying a continuous signal to said circuit breaker and for operating said circuit breaker to cut-off condition when said continuous signal changes its magnitude, an a.c. source, a transformer connected thereto and a rectifier bridge to provide d.c. charging current in said charger from said a.c. source, said circuit breaker comprising a thyristor connected to said a.c. source through a half-wave rectifier bridge, an inductor and a current regulating circuit in series with said thyristor and a diode connected in parallel with the rectifier bridge and the thyristor.

4,065,713
VOLTAGE STABILIZER

Werner Pollmeier, Verl, Germany, assignor to Nixdorf Computer AG, Germany
Filed Sept. 11, 1975, Ser. No. 612,498
Claims priority, application Germany, Sept. 13, 1974, 2443893; July 17, 1975, 2532019
Int. Cl.² H02M *3/335*
U.S. Cl. 363—19 **8 Claims**

1. A voltage stabilizer circuit arrangement comprising input terminals for the receipt of an unstabilized input direct voltage, a series combination including a series regulator element having a control input and an energy storage means including an inductance connected directly to the controlled path of the series regulator element, with said series regulator element connected to one said input terminal and said energy storage means connected to the other said input terminal, and the end of the inductance connected to the series regulator element also connected with the said other input terminal by way of a diode poled so as to be energized in the forward direction by

the inductive turn-off voltage appearing on the inductance, and a control circuit arranged to control the series regulator element in accordance with the difference between a predetermined reference voltage and the stabilized voltage,, characterized by an inverter circuit (Ts) having a direct current input and an alternating current output, with said direct current input being connected between the inductor (L) of the energy storage circuit and said other input terminal (e2), and said inverter circuit output connected by way of a rectifier circuit (D3, D4) to provide a direct voltage output, means applying

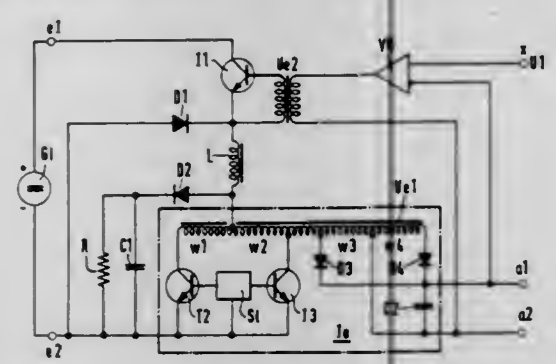

said direct voltage output to one input of a comparator means (VG), means applying a predetermined reference voltage to the other input of said comparator means, and means (Ue2) applying the output of said comparator to the control input of said series regulator element wherein there is connected in parallel with the inverter circuit input a series combination of a diode (D2) and the parallel RC combination of a resistor (R) and a capacitor (C1), said diode having a polarity such that it is energized in the forward direction by the inductive turn-off voltages appearing on the inductance.

4,065,714

PULSED RF EXCITED SPECTROMETER HAVING IMPROVED PULSE WIDTH CONTROL

Howard D. W. Hill, Cupertino, Calif., assignor to Varian Associates, Inc., Palo Alto, Calif.

Filed June 21, 1976, Ser. No. 698,245

Int. Cl.² G01R *33/08*

U.S. Cl. 324—.5 A **13 Claims**

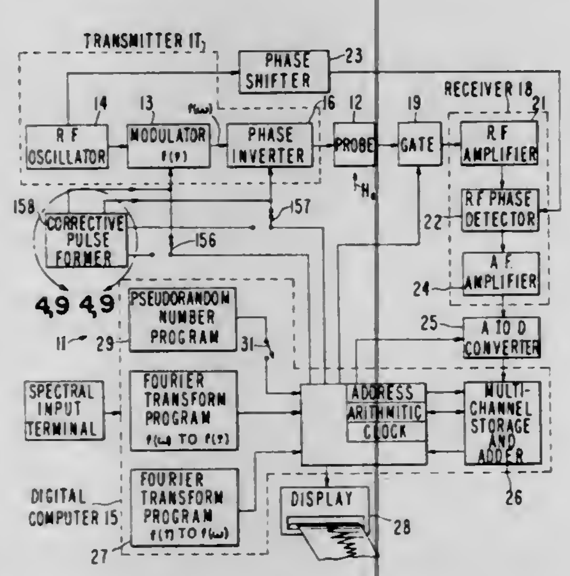

1. In a method of exciting and detecting resonance of a sample of matter under investigation in a radio frequency spectrometer, the steps of:

generating and applying an excitation pulse train of radio frequency energy to the said sample of matter to excite resonance thereof, said pulse train including a train of composite pulses, each composite pulse being shaped to cause the nuclei of said sample to respond as if the composite pulse had substantially zero rise and fall times, each said composite pulse having a primary pulse component of radio frequency energy of a first phase, and an associated secondary pulse component of radio frequency energy of a second phase opposite to that of said first phase, said secondary pulse component being shorter than said primary pulse component, and further, said secondary and primary pulse components having substantially identical rise and fall characteristics whereby the excited nuclei of said sample combine the effects of the first and second phases of said composite pulse excitation so that the detectable nuclei free procession following said composite pulse substantially corresponds to the free precession response of the sample nuclei to a theoretical excitation pulse having a zero rise and fall time.

4,065,715

PULSE DURATION MODULATED SIGNAL TRANSDUCER

James M. Jaffe, Los Altos, Calif., and John W. Hile, Birmingham, Mich., assignors to General Motors Corporation, Detroit, Mich.

Continuation-in-part of Ser. No. 642,057, Dec. 18, 1975, abandoned, which is a continuation-in-part of Ser. No. 535,175, Dec. 23, 1974, abandoned. This application July 2, 1976, Ser. No. 702,110

Int. Cl.² G01R *27/26*

U.S. Cl. 324—60 CD **7 Claims**

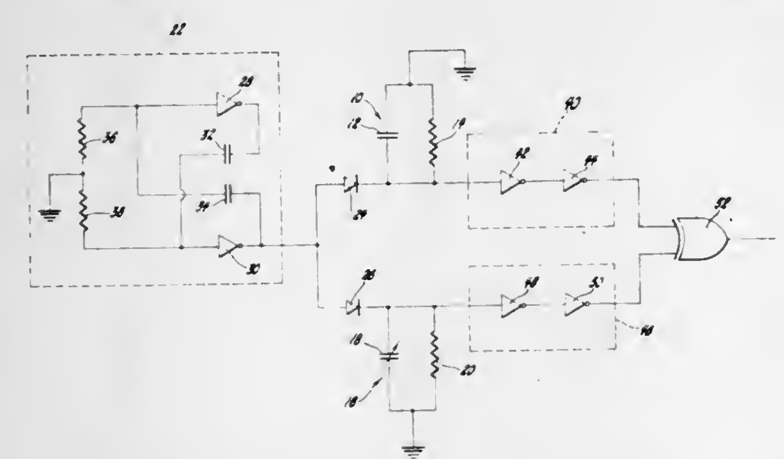

6. A transducer effective to produce a pulse duration modulated signal in accord with the value of the parameter, comprising in combination:

a reference circuit having a first reactor and a first resistor defining a predetermined time constant;

a second circuit having a second reactor and a second resistor, at least one of which varies in accordance with the parameter to define a time constant determined by the parameter;

means effective to repeatedly set a predetermined voltage across said first and second reactors in unison, the voltage across the first and second reactors varying after each repeated setting at rates determined by the respective time constants of the reference and second circuits;

means responsive to the voltage across the first reactor effective to produce a first digital signal when said voltage attains a predetermined reference value;

means responsive to the voltage across the second reactor effective to produce a second digital signal when said voltage attains the predetermined reference value; and

a logic circuit responsive to the first and second digital signals effective to generate a series of pulses, each pulse commencing upon the termination of the shortest one of the first or second digital signals and terminating upon the termination of the longest one of the first or second digital signals, each pulse having a duration determined by the value of said parameter.

4,065,716

APPARATUS FOR DISPLAYING A BAND REPRESENTATION OF A SIGNAL

Rory Morgan O'Brien, Hitchin, England, assignor to Alfred Herbert Limited, Coventry, England

Filed Feb. 25, 1977, Ser. No. 772,273

Claims priority, application United Kingdom, Feb. 27, 1976, 7910/76

Int. Cl.² G01R *31/00*

U.S. Cl. 324—96 **14 Claims**

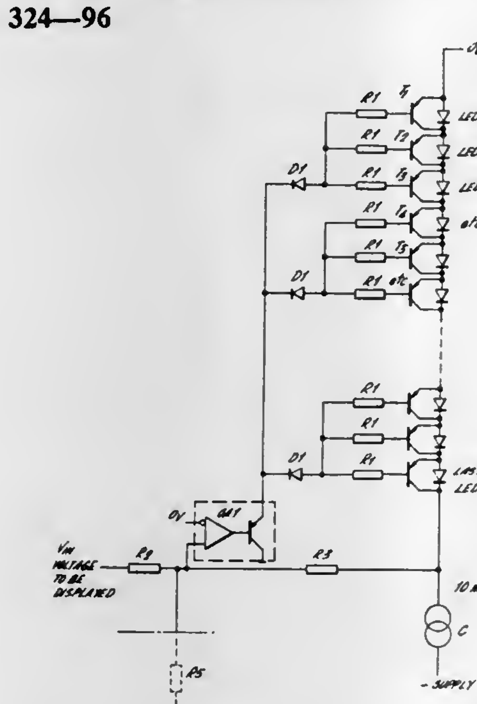

1. Band representation display apparatus comprising:

a plurality of electrical light-emission devices which are physically positioned for forming a band representation and which are electrically connected in series with one another,

electrical current supply means which is connected to one end of the series of light-emission devices and which is operable for making electrical current available to flow through the series to light the devices,

control means including a plurality of switch means, which switch means are connected across respective associated ones of said devices and which are each operable for bypassing said continuous electrical current past the associated device,

a conductive portion for receiving an input signal of which a band representation is to be displayed, and

feedback means which is connected to said series arrangement and which is operable for delivering a negative feedback signal representative of the sum of the potential difference(s) across the lit light-emission device(s),

said control means being connected to said conductive portion and said feedback means to receive said input signal and said negative feedback signal, and being operable to bypass said current past a number of said devices in dependence upon said input signal so that a band representation of said signal is formed by the devices remaining lit.

4,065,717

MULTI-POINT MICROPROBE FOR TESTING INTEGRATED CIRCUITS

Lionel E. Kattner, Saratoga; Albert P. Youmans, Cupertino, and Patrick J. Shasby, San Jose, all of Calif., assignors to Signetics Corporation, Synnyvale, Calif.

Continuation of Ser. No. 72,521, Sept. 15, 1970, which is a continuation of Ser. No. 733,718, May 31, 1968, abandoned, which is a division of Ser. No. 336,489, Jan. 8, 1964, Pat. No. 3,405,361. This application July 19, 1973, Ser. No. 380,859

Int. Cl.² G01R *1/06, 31/26*

U.S. Cl. 324—158 P **14 Claims**

5. In a multiple contact lead structure for use with a semiconductor device having a substantially planar surface with a plurality of closely spaced contact pads on said surface forming a pattern adjacent the outer perimeter of the same, the multiple contact lead structure comprising a flexible sheet-like member of insulating material having one portion thereof forming a substantially planar surface and a plurality of spaced leads of thin metallic film adjacent to said surface of said sheet-like member so that they are insulated from each other and

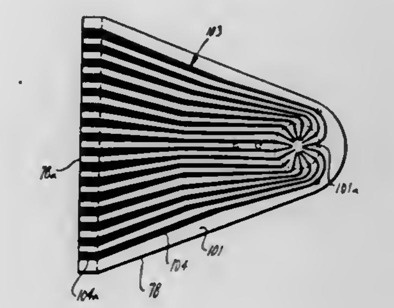

having inner and outer extremities with the inner extremities being generally tapered and substantially narrower than the outer extremities, the inner extremities forming a pattern of contact areas lying generally in a single plane which conform to the pattern of the contact pads and are adapted to make contact therewith.

4,065,718

MULTIPATH COMMUNICATIONS SYSTEM

Stanley W. Attwood, Scottsdale, Ariz., assignor to Motorola, Inc., Schaumburg, Ill.

Filed Dec. 30, 1976, Ser. No. 756,046

Int. Cl.² H03C *3/08*

U.S. Cl. 325—65 **2 Claims**

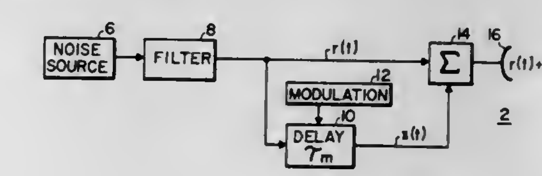

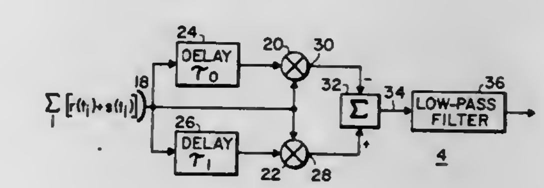

1. A system for transmission of communications signals comprising in combination:

a transmitter, said transmitter further comprising:

means for generating a reference noise signal having a predetermined bandwidth and having a predetermined center frequency;

means for delaying said reference noise signal, said delaying means being responsive to the communication signals to provide a plurality of delays ranging from a predetermined minimum to a predetermined maximum delay time;

means for summing said reference noise signal and said delayed reference noise signal; and

means for radiating said summed reference noise and delayed reference noise signals; and

a receiver, said receiver further comprising:

means for receiving said radiated summed signals;

means for time delaying said received summed signals, said time delay means providing at least one fixed time delay corresponding to one of said predetermined time delays in said transmitter;

at least one means for multiplying said summed signals by said delayed summed signals to provide product signals;

means for differencing said product signals to recover the communication signals; and

means for algebraically integrating the recovered communication signals.

4,065,719

DIAGNOSTIC CONNECTION MEANS FOR VEHICLE MOUNTED RADIO

Herbert M. Penningroth, and James H. Guyton, both of Kokomo, Ind., assignors to General Motors Corporation, Detroit, Mich.

Filed Nov. 15, 1976, Ser. No. 742,051

Int. Cl.² H04B *17/00*

U.S. Cl. 325—312 **2 Claims**

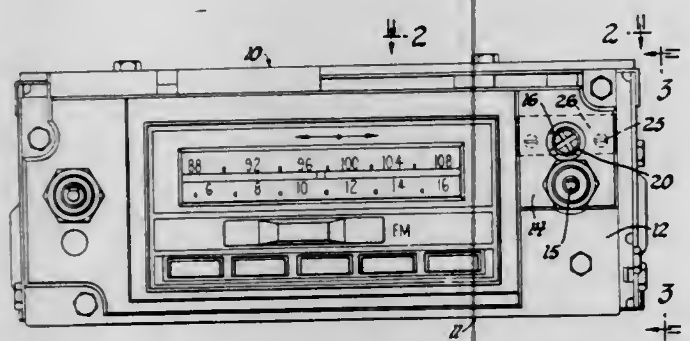

2. In a radio adapted for mounting in a motor vehicle dash, the radio having a case enclosing electronic circuitry including antenna trimmer means having an antenna trimmer adjustment screw, the case having a front plate with an opening providing access to the antenna trimmer adjustment screw for an adjusting tool from the front of the radio, the improvement comprising:

an electrically non-conducting tube extending from the trimmer adjustment screw through the front plate opening, said tube having an inner surface and providing access to the trimmer adjustment screw;

a plurality of electrical contacts within the tube, the contacts being recessed from the tube inner surface and

means electrically connecting said contacts to selected points of the electronic circuitry, whereby the tube is adapted to receive, without the radio being removed from the dash, an adjusting tool for engaging the trimmer adjustment screw without touching the recessed contacts and, alternatively, a test probe with a contact adapted to engage each of the contacts in the tube selectively.

4,065,720

ELECTRONIC CHANNEL SELECTOR

Russell W. Pogue, Jr., Kokomo, Ind., assignor to General Motors Corporation, Detroit, Mich.

Filed Mar. 18, 1977, Ser. No. 779,017

Int. Cl.² H03K *21/36*

U.S. Cl. 325—464 **3 Claims**

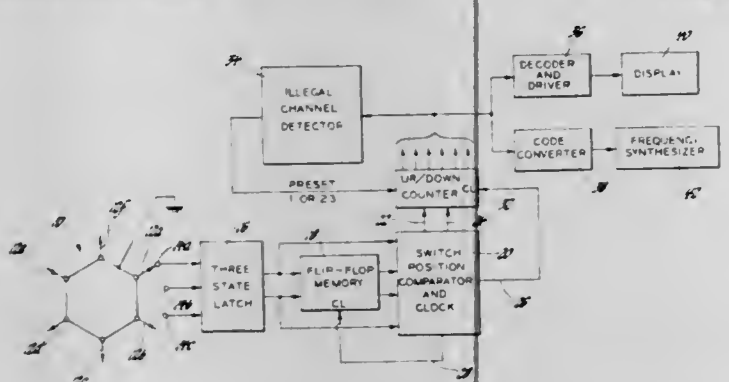

1. An electronic channel selector for providing a signal representing a selected channel, the selector comprising:

a rotary switch having the number N discrete angular positions, N/3 movable angularly spaced contacts, and three stationary contacts angularly spaced so as to be sequentially engaged in a first order by the movable contacts as the rotary switch is rotated to sequential angular positions in a clockwise direction and in a second order opposite to the first order when the rotary switch is rotated to sequential angular positions in a counterclockwise direction;

a latch means coupled to the stationary contacts effective to provide a first digital signal identifying the last stationary contact engaged by one of the movable contacts;

a memory means effective when clocked, to memorize the first digital signal provided by the latch means;

a comparator means responsive to the signal memorized by the memory means and the first digital signal provided by the latch means, the comparator means being effective in timed sequence when the first digital signal provided by the latch means changes from the signal memorized by the memory means to provide (A) an up/down control signal, (B) an up/down clock signal and (C) a memory clock signal for clocking the memory means, the up/down control signal being in a count-up state when the signal memorized by the memory means and the first digital signal provided by the latch means represents clockwise rotation of the rotary switch and being in a count-down state when the signal memorized by the memory means and the first digital signal provided by the latch means represents counterclockwise rotation of the rotary switch; and

an up/down counter effective to count in successive steps the up/down clock signals in an up or down direction in dependence upon the state of the up/down control signal and to provide a second digital signal representing a selected channel, the selected channel being changed in an up or down direction in dependence upon rotation of the rotary switch in a clockwise or counterclockwise direction.

4,065,721

SOLID STATE THRESHOLD DETECTOR WITH HYSTERESIS

Paul R. Rabe, Sterling Heights, Mich., assignor to General Motors Corporation, Detroit, Mich.

Filed Nov. 15, 1976, Ser. No. 741,729

Int. Cl.² H03K *5/20, 7/08, 7/10*

U.S. Cl. 328—1 **3 Claims**

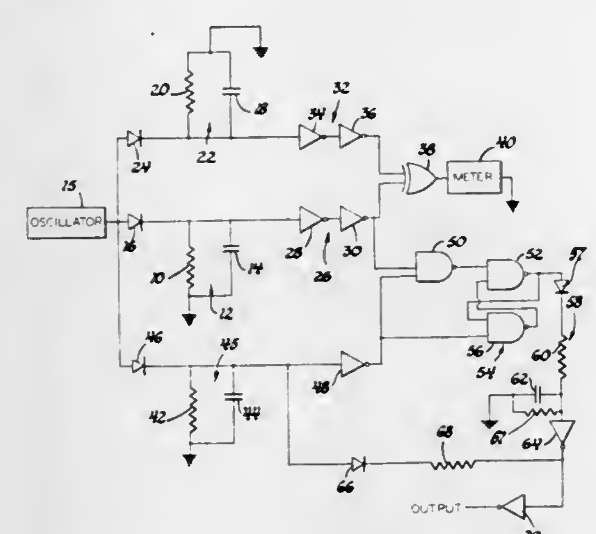

1. A threshold detector circuit having a setpoint with hysteresis for providing an output representing the critical magnitude of a condition, the circuit comprising:

a monitoring circuit having a first reactance element and a first resistor, at least one of which varies in accordance with the magnitude of the condition to define a monitoring circuit time constant determined by the magnitude of the condition, the monitoring circuit time constant varying in a predetermined sense from a critical time constant when the magnitude of the condition is critical;

a reference circuit having a second reactance element and a second resistor defining a first reference circuit time constant equal to the critical time constant;

means effective to repeatedly set a predetermined voltage across the first and second reactance elements in unison, the voltage across the first and second reactance elements varying after each repeated setting at rates determined by the respective time constants of the monitoring and reference circuits;

first level detector means responsive to the voltage across the first reactance element effective to produce a first series of digital pulses, each digital pulse in the first series having a duration related to the monitoring circuit time constant;

second level detector means responsive to the voltage across the second reactor effective to produce a second series of digital pulses, each digital pulse in the second series having a duration related to the reference circuit time constant and which represents the threshold detector setpoint;

output circuit means coupled to the first level detector means and the second level detector means effective to initiate a digital output signal representing a critical magnitude of the condition when the duration of the digital pulses in the first series differs from the duration of the digital pulses in the second series in a sense representing the monitoring circuit time constant varying in the predetermined sense from the critical time constant and terminating the digital output signal when the duration of the digital pulses in the first series again equals the duration of the digital pulses in the second series;

a third resistor; and

means responsive to the digital output signal effective to couple the third resistor in parallel with the second resistor for the duration of the digital output signal, the second reactance element and the second and third resistors defining a second reference circuit time constant during the period of the digital output signal that is different from the critical time constant in a sense opposite the predetermined sense, the duration of the digital pulses in the second series being varied upon the provision of the digital output signal so as to provide for hysteresis in the threshold detector setpoint.

4,065,722

DEMODULATION METHOD AND CIRCUIT FOR DISCRETELY MODULATED AC SIGNALS

John R. Francis, Port Moody, Canada, assignor to Glenayre Electronics, Ltd., North Vancouver, Canada

Filed Dec. 27, 1976, Ser. No. 753,993

Int. Cl.² H03D *1/00, 3/00, 5/00*

U.S. Cl. 329—105 **18 Claims**

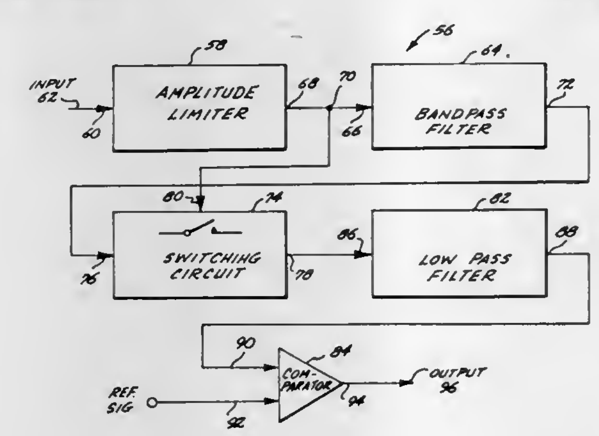

1. A demodulator circuit for recovering an information signal from a modulated ac signal which has been modulated by discrete changes in one of the following: amplitude, frequency, and phase, and which during at least certain intervals has a predetermined frequency and a non-zero amplitude, comprising:

a bandpass filter means having an input for receiving said modulated ac signal and having an output, said bandpass filter means selectively passing to said output those components of signals received at said input that have frequencies which fall within a predetermined bandpass centered about said predetermined frequency;

switching circuit means having a signal input, a signal output and a control input, said signal input being connected to said output of said bandpass filter means, and said control input being connected to said input of said bandpass filter means, said switching circuit means being responsive to signals appearing at said input of said bandpass filter means to alternately switch between a first state and a second state at a frequency and phase so related to those components of said modulated ac signal passed to said output of said bandpass filter means so that when said modulated ac signal has said predetermined frequency and said non-zero amplitude said switching circuit means is switched between said states so as to cause, between said signal input and said signal output, a rectification-like detection of those components of said modulated ac signal passed to said output of said bandpass filter means; and

a low-pass filter means connected to said signal output of said switching circuit means for filtering from the detected components of said modulated ac signal those signal frequencies at and above said predetermined frequency so as to pass only signals that represent said discrete changes in said modulated ac signal, and thus represent said information signal.

4,065,723

TUNED RADIO FREQUENCY AMPLIFIER WITH BACK TO BACK VARACTOR DIODES CONNECTED THROUGH A COMMON CATHODE LEAD

Thomas E. Endres, and Donald W. Rodeman, both of Kokomo, Ind., assignors to General Motors Corporation, Detroit, Mich.

Filed Aug. 16, 1976, Ser. No. 714,485

Int. Cl.² H03F *3/04*

U.S. Cl. 330—302 **2 Claims**

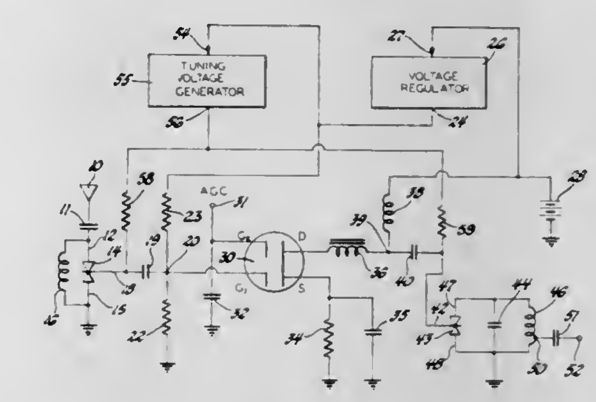

1. A tuned radio frequency amplifier for use with a signal receiving antenna, the tuner comprising, in combination:

signal amplification means having an input adapted for connection to the antenna to receive and amplify the signal therefrom and further having an output;

a pair of varactor diodes, each having a cathode and an anode, the cathodes of the varactor diodes being connected together in a common connection;

means for providng a variable regulated tuning voltage to the common connection of the varactor diode cathodes;

an inductor connected between the anodes of the varactor diode, the inductor comprising an output for the amplifier; and

means connecting the output of the signal amplification means to the common connection of the varactor diode cathodes, whereby the varactor diodes and inductor form a tuned circuit for the signal amplification means with an input through the common connection, in which a smaller range of tuning voltage is required for a given range of tuned frequencies than would be required if input were through one of the anodes.

4,065,724
BALANCED LOW IMPEDANCE DIFFERENTIAL INPUT LINE PREAMPLIFIER

Joseph B. Wicklund, Jr., Bothell, Wash., assignor to Opcon, Inc., Everett, Wash.

Division of Ser. No. 608,664, Aug. 28, 1975, Pat. No. 4,015,117. This application Aug. 2, 1976, Ser. No. 710,626
Int. Cl.[2] H03F *3/45*
U.S. Cl. 330—252 **4 Claims**

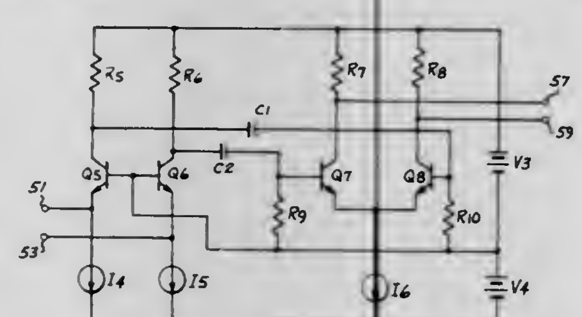

1. A balanced low impedance differential input line preamplifier having low input impedance and good common mode rejection comprising:
- a first common base input stage including a first high gain transistor having its emitter connected to directly receive a first input signal applied to said balanced low impedance differential input line preamplifier;
- a second common base stage including a second high gain transistor having its emitter connected to directly receive a second input signal applied to said balanced low impedance differential input line preamplifier, the base of said second high gain transistor connected to the base of said first high gain transistor;
- first constant current source means connected to the emitters of said first and second high gain transistors;
- a differential amplifier including third and fourth transistors connected together such that they produce an output signal related to the difference in the input signal applied to the bases of said third and fourth transistors;
- second constant current source means connected to the emitters of said third and fourth transistors;
- a first DC decoupling capacitor connected between the collector of said first high gain transistor and the base of said third transistor; and,
- a second DC decoupling capacitor connected between the collector of said second high gain transistor and the base of said fourth transistor.

4,065,725
GAIN CONTROL CIRCUIT

William Joseph Lillis, Tempe, and Paul Mike Henry, Chandler, both of Ariz., assignors to Motorola, Inc., Schaumburg, Ill.

Filed Aug. 16, 1976, Ser. No. 714,727
Int. Cl.[2] H03F *3/45;* **H03G** *3/30*
U.S. Cl. 330—254 **19 Claims**

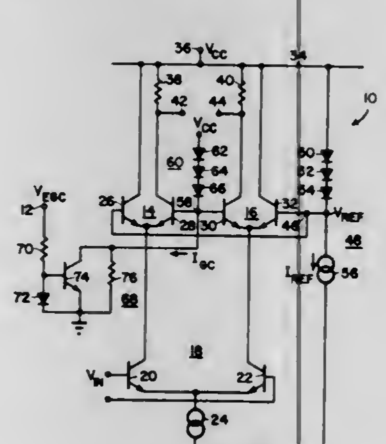

1. A gain controlled amplifier including a differential input stage responsive to an input signal for deriving a differential output signal at first and second outputs, first and second differential output stages each having a first input interconnected to a first node, and each having a second input interconnected to a second node, the common terminal of each of the output stages being coupled to a respective output of the input differential stage, the improvement comprising:
- a reference circuit means coupled to the first node including at least one electron control means for providing a reference voltage at the first node having a predetermined temperature characteristic; and
- gain control means coupled to the second node which is responsive to an applied gain control signal for causing the gain of the amplifier to vary in accordance with said applied gain control signal, said gain control means including at least one electron control means for causing the voltage appearing at the second node to have a substantially identical temperature characteristic as said reference voltage and to be varied in a linear fashion such that the gain of the amplifier is varied linearly in accordance with said applied gain control signal and the gain control characteristic is independent to variations in ambient temperature and power supply voltages.

4,065,726
NEGATIVE FEEDBACK AMPLIFIER AND LEVER SHIFTER

Stephen J. Senger, Jamestown, N. Dak., assignor to The United States of America as represented by the Secretary of the Navy, Washington, D.C.

Filed Aug. 11, 1976, Ser. No. 713,455
Int. Cl.[2] H03F *3/04*
U.S. Cl. 330—288 **5 Claims**

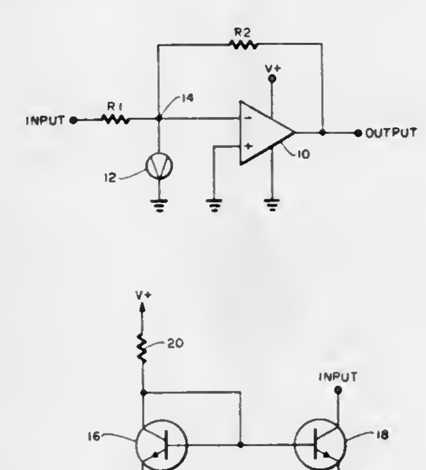

1. A negative feedback amplifier and level shifter comprising:
- a. a DC amplifier having an output, a negative input and a positive input;
- b. a feedback resistance connected between said output and said negative input at said DC amplifier;
- c. an input resistance connected between a signal input and said negative input of said DC amplifier to form a summing junction at said negative input of said DC amplifier;
- d. a matched pair of transistors configured to form a current source connected to draw a predetermined amount of current from said summing junction thereby controlling DC voltage levels at said output of said DC amplifier independently of AC gain of said DC amplifier.

4,065,727
VARIABLE FREQUENCY OSCILLATOR HAVING PROGRAMMABLE DIGITAL FREQUENCY DISPLAY

William Glen Johnson, Sr., 1251 Hiawatha St., Stockton, Calif. 95205

Filed Oct. 1, 1976, Ser. No. 728,518
Int. Cl.[2] H03B *19/12*
U.S. Cl. 331—51 **10 Claims**

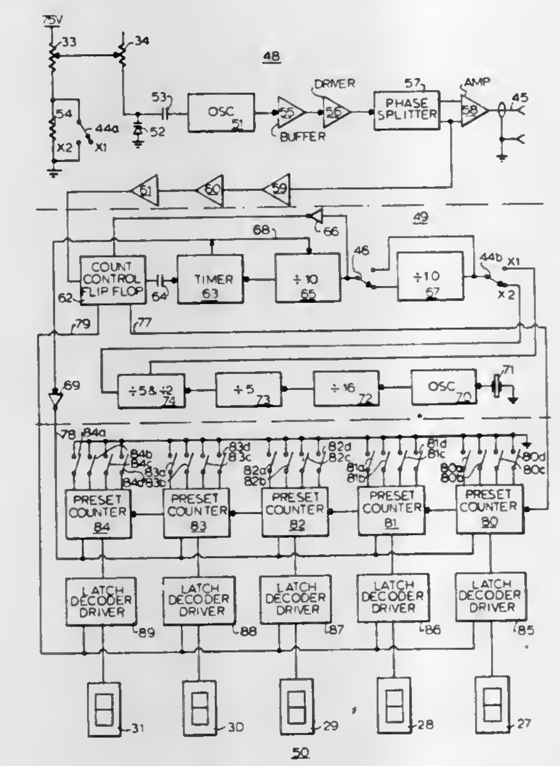

1. A self-contained high frequency range variable frequency oscillator system for connection to a user's high frequency radio set regardless of its design and capable of functioning in lieu of a local oscillator in said set, said system comprising:
- high frequency oscillator means for generating a radio signal at a primary frequency variable within a range in the high frequency spectrum;
- frequency variation means connected to said high frequency oscillator means for enabling the user to vary the primary frequency thereof;
- output buffer means connected to said oscillator means and to said radio set for isolating said oscillator means from said radio set;
- time base generator means for generating a control signal providing a predetermined recurrent counting interval wherein said time base generator means provides a plurality of different predetermined recurrent counting intervals and includes
  - a frequency standard oscillator;
  - a frequency divider chain of plural stages connected at its input to said standard oscillator and having a plurality of outputs to provide said intervals, each output being a quotient of the frequency of said standard oscillator;
  - master slave flip flop means having a master flip flop clocking input connected to said output buffer means for receiving said variable high frequency signal, a reset input connected to a selected output of said divider chain, and an inverting output connected to said programmable digital counter means to provide said recurrent counting interval thereto;
  - said master slave flip flop means having a slave flip flop clocking input connected to said reset input of said master flip flop, a reset input connected to one of said plural stages of said frequency divider chain, a non-inverting output connected to a resistance-capicitance timing circuit, and an inverting output connected to said digital display means for latching the total count reached by said digital counter during a display interval;
  - monostable multivibrator means having an input connected to said resistance-capacitance timing circuit and an output connected to said frequency divider chain to disable said output quotient during said display interval and to said programmable digital counter means for resetting said counter at the beginning of said display interval; and
  - count range selector switch means connected to said time base generator means for selecting between said different intervals;
- presettable digital counter means connected to said output buffer means and to said time base generator means for recounting the number of oscillations of said radio signal occurring during each said counting interval, and having an output;
- manual set switch means connected to said digital counter means for enabling the user to preset a fixed count into said digital counter means, said fixed count being a function of the difference between the frequency at which said set is operating and the frequency of said radio signal;
- digital display means connected to said time base generator means and to the output of said digital counter means for displayin the frequency to which said radio set is tuned,

whereby the user may connect said system to an unlimited variety of high frequency radio sets having vastly different offsets between local oscillator frequency and operating frequency and still obtain a display of virtual operating frequency of the set by presetting said digital counter means with the fixed count appropriate to the particular set to which said system is connected.

4,065,728
CRYSTAL OSCILLATOR INCLUDING A PAIR OF PUSH-PULL COMPLEMENTARY TRANSISTOR AMPLIFIERS

Veikko Reynold Saari, Spring Lake Heights, N.J., Assignor to Bell Telephone Laboratories Murray Hill, N.J.

Filed Dec. 13, 1976, Ser. No. 749,785
Int. Cl.[2] H03B *5/36*
U.S. Cl. 331—75 **20 Claims**

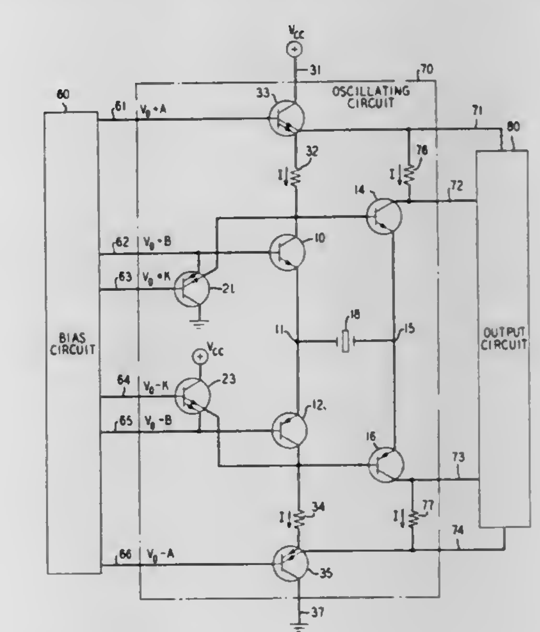

1. An oscillator comprising
- a first push-pull non-inverting amplifier stage including a first pair of serially-connected complementary transistors,
- a second push-pull non-inverting amplifier stage connected to said first stage and including a second pair of serially-connected complementary transistors,
- resonant feedback path means connected between said first and second amplifier stages,
- and means connected to at least one of said amplifier stages for controlling the oscillation amplitude of said oscillator.

4,065,729
MONOLITHIC PNPN INJECTION LASER OPTICAL REPEATER
Avraham Gover; Ilan Samid, and Chien-Ping Lee, all of Pasadena, Calif., assignors to California Institute of Technology, Pasadena, Calif.
Filed Apr. 16, 1976, Ser. No. 677,529
Int. Cl.[2] H01S *3/19*
U.S. Cl. 331—94.5 H **11 Claims**

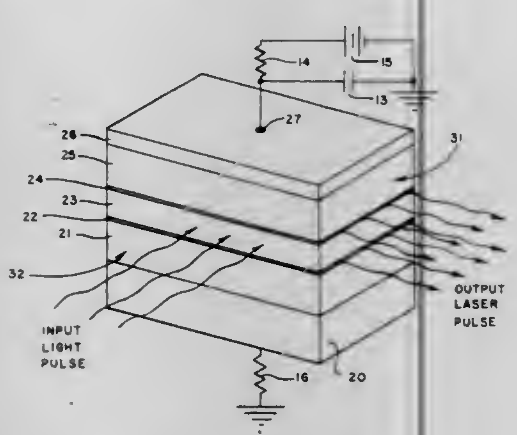

1. An optical repeater comprising a monolithic PNPN injection laser for detecting an incident pulse of light of predetermined minimum amplitude and retransmitting a high amplitude laser pulse, said laser being comprised of a crystal of direct band-gap semiconductor material in at least four layers of N-type and P-type material to provide at least two planar p-n junctions of the same polarity separated by a planar p-n junction of opposite polarity, said junctions cooperating to form a structure having active regions where charged carriers recombine, said structure exhibiting a negative resistance V-I characteristic having a breakover voltage at which high conduction occurs, said high conduction being maintained so long as a minimum holding current level is maintained through said structure, said crystal having a pair of optically flat and parallel faces normal to said planar junctions, means for biasing said structure across said junctions in series at a voltage below said breakover voltage, means coupled to said biasing means for storing a predetermined quantity of charge to be discharged through said structure when switched to high conduction, and means for coupling said pulse of light of predetermined minimum amplitude into said planar p-n junctions thereby producing photocurrent and consequently regenerative high current through said junctions to cause population inversion with simultaneous emission of an output laser pulse from said junctions through at least one of said optically flat faces while said regenerative high current is above a predetermined threshold level for lasing, said threshold level being greater than said holding current level.

4,065,730
LASER OPTICAL COUPLER
Henry T. Minden, Concord, Mass., assignor to Sperry Rand Corporation, New York, N.Y.
Filed June 10, 1976, Ser. No. 694,852
Int. Cl.[2] H01S *3/19*
U.S. Cl. 331—94.5 H **8 Claims**

1. Laser apparatus comprising:
a laser diode having a right rectangular parallelipiped semiconductor body, said body having a layer wherein laser light is generated disposed between first and second opposed major rectangular surfaces of said body,
said body having a cleaved light-emitting surface disposed at right angles to said opposed major rectangular surfaces,
first and second electrical contacts disposed respectively directly on said opposed major rectangular surfaces of said semiconductor body,
said first contact being so disposed on said first opposed major rectangular surface as to inhibit light generation except in a parallelogram located at the diagonal of said right rectangular parallelipiped semiconductor body within the light generating layer, only one corner of said parallelogram contacting said cleaved light-emitting surface,
said parallelogram having a length substantially equal to said diagonal and a width substantially smaller than said length, and

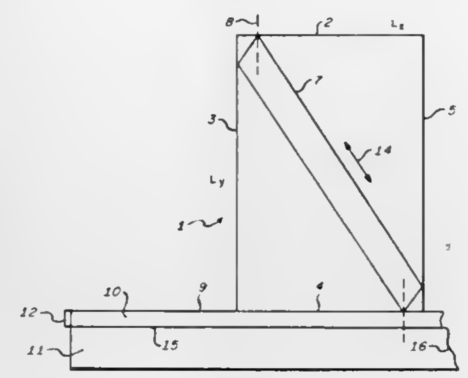

a dielectric optical wave guide having first and second planar broad walls, said first planar broad wall being in optical contact with said cleaved light-emitting surface whereby a major portion of said laser light is refracted at said cleaved surface into said dielectric optical wave guide for propagation therein by successive total reflections.

4,065,731
TANDEM LASER ASSEMBLY
Shing Chung Wang, Temple City, Calif., assignor to Xerox Corporation, Stamford, Conn.
Filed Apr. 27, 1976, Ser. No. 680,563
Int. Cl.[2] H01S *3/22*
U.S. Cl. 331—94.5 G **13 Claims**

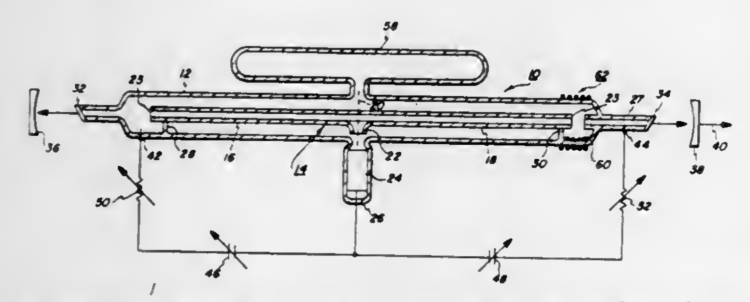

1. A laser discharge tube for producing an output laser beam having a plurality of wavelengths comprising:
a unitary positive column laser comprising first and second capillary discharge sectiions, said sections containing respectively a first and second active laser medium,
a tube envelope for enclosing said first and second active lasing media,
a discharge tube having first and second end portions supported within said tube envelope forming a resonant laser cavity, said discharge tube having an opening located between said first and second end portions,
a first electrode positioned adjacent said first discharge tube end,
a second electrode positioned adajcent said discharge tube opening,
a third electrode positioned adjacent said second tube, and
means for applying an electrostatic potential between said first, second and third electrodes of a polarity to maintain a first discharge between said first electrode and said second electrode through (a) said first portion of said discharge tube whereby said first active lasing medium produces a first laser beam of a single wavelength and to maintain a second discharge between the third and second said electrodes through said second portion of said discharge tube whereby said second active lasing medium produces a second laser beam comprising at least one wavelength, said first and second laser beams being combined into a laser output beam having a plurality of wavelengths.

4,065,732
ENERGY RESONATING SYSTEM WITH ELIMINATION OF OPTICAL BENCH STRUCTURE
Frank H. Scammell, Concord, Mass., assignor to Avco Everett Research Laboratory, Inc., Everett, Mass.
Filed July 29, 1976, Ser. No. 709,843
Int. Cl.[2] H01S *3/081*
U.S. Cl. 331—94.5 C **9 Claims**

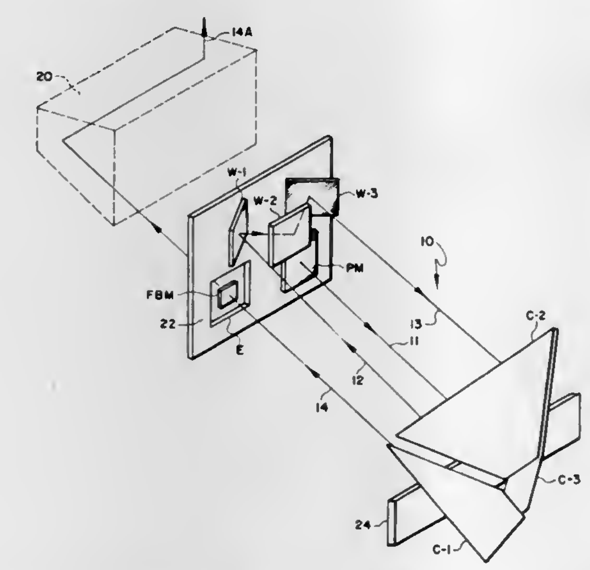

1. Energy resonating system comprising:
means defining at least one cavity space with primary and feedback mirrors,
means defining a pair of additional opposing mirror assemblies bracketing the cavity space, said primary and feedback mirrors and said mirror assemblies defining an optically resonant cavity,
means for energizing the cavity space, and
mounting means for said mirror assemblies constructed and arranged to allow relative freedom of movement therebetween,
one of said mirror assemblies being a W-fold mirror assembly and the other a corner cube mirror assembly producing a folded confocal optical reflecting path between the primary and feedback mirrors and including the component mirrors of said W-fold and corner cube assemblies so that occasional relative displacement from an initial alignment between said opposing mirror assemblies is at least substantially compensated notwithstanding relative movement therebetween.

4,065,733
TRANSISTOR BLOCKING OSCILLATOR STABILIZED AGAINST CHANGES IN BIAS VOLTAGE AND TEMPERATURE
Youjiro Shigemori, and Yoshio Mitumori, both of Shizuoka, Japan, assignors to Star Seimitsu Kabushika Kaisha, Japan
Filed Feb. 17, 1977, Ser. No. 769,685
Int. Cl.[2] H03K *3/30*
U.S. Cl. 331—112 **2 Claims**

1. A blocking oscillator comprising a pair of terminals for connection with a d.c. supply, a transistor having a base, emitter and collector, a resistor connected to supply a base bias to the transistor, a core of high magnetic permeability, a drive coil and a control coil disposed on the core so as to be inductively coupled with each other, the drive coil and the collector-emitter path of the transistor forming a series circuit which is connected across the pair of terminals, another series circuit including the resistor and the control coil being connected across the pair of terminals, the base of the transistor being connected with the junction between the resistor and the control coil, a first, forwardly poled diode connected in series between the control circuit and one of the terminals, and a second, forwardly poled diode connected in shunt with the

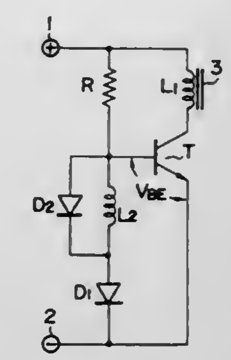

control coil, the transistor and the first and the second diodes being formed of a semiconductor material of a same kind.

4,065,734
ELASTIC SURFACE WAVE DEVICES
Shouzo Takeno; Masao Mashita, both of Yokohama, and Toshihiro Onodera, Tokyo, all of Japan, assignors to Tokyo Shibaura Electric Co., Ltd., Kawasaki, Japan
Filed July 14, 1976, Ser. No. 705,177
Claims priority, application Japan, July 14, 1975, 50-85354; July 29, 1975, 50-91581; Nov. 21, 1975, 50-139205
Int. Cl.[2] H03H *9/04, 9/26, 9/30;* **H01L** *41/18*
U.S. Cl. 333—30 R **7 Claims**

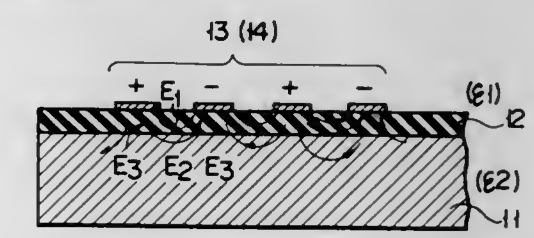

6. An elastic surface wave device comprising a ceramic piezoelectric substrate, a titanium dioxide dielectric film deposited on said piezoelectric substrate, and an interdigital type input-output tranducer formed on said titanium dioxide dielectric film for converting an elastic surface wave energy, said titanium dioxide dielectric film having a thickness of 0.00016 λ to 0.047 λ, where λ represents the wavelength of the elastic surface wave without the dielectric film.

4,065,735
ELECTRICAL FILTERS INCLUDING COUPLED RESONATORS
John S. Palfreeman, Brockham; Martin Redwood, Sevenoaks; Frederick W. Smith, Sutton, and Richard F. Mitchell, Kingston, all of England, assignors to U.S. Philips Corporation, New York, N.Y.
Filed Jan. 12, 1976, Ser. No. 648,308
Claims priority, application United Kingdom, Dec. 10, 1975, 1724/75
Int. Cl.[2] H03H *9/04, 9/26, 9/32, 13/00*
U.S. Cl. 333—72 **13 Claims**

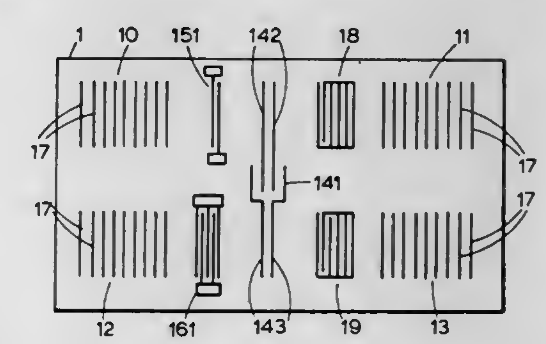

1. A surface acoustic wave electrical filter comprising a body of piezoelectric material on one surface of which is ar-

ranged a plurality of coupled acoustic surface wave resonators each having substantially the same centre frequency, input transducing means coupled to said one surface for converting an input electric signal into acoustic surface wave energy propagating along said one surface and into a first of said resonators for exciting a resonant acoustic surface standing wave therein, output transducing means coupled to said one surface and arranged to receive acoustic surface wave energy from a second resonator for deriving an output signal, each of said first and second acoustic surface wave resonators comprising two spaced apart reflectors aligned in tandem with each reflector comprising an array of discrete parallel reflecting elements, and coupling means between said first and second resonators for coupling acoustic surface wave energy from one resonator to the next one, said coupling means comprising first and second arrays of discrete parallel conductive strips on said one surface and electrically insulated from each other, the first and second arrays being individually located in the first and second resonators respectively and being arranged to transfer electrical energy from the first to the second array, whereby part of the acoustic surface wave energy across the first array is transferred to be relaunched as acoustic surface wave energy by the second array.

4,065,736
AMPLITUDE AND PHASE PROGRAMMABLE ACOUSTIC SURFACE WAVE MATCHED FILTER
Arnold London, Tempe, Ariz., assignor to Motorola, Inc., Schaumburg, Ill.
Filed May 27, 1976, Ser. No. 690,490
Int. Cl.² H03H *9/26, 9/30;* **H01L** *29/84, 27/10*
U.S. Cl. 333—72 **9 Claims**

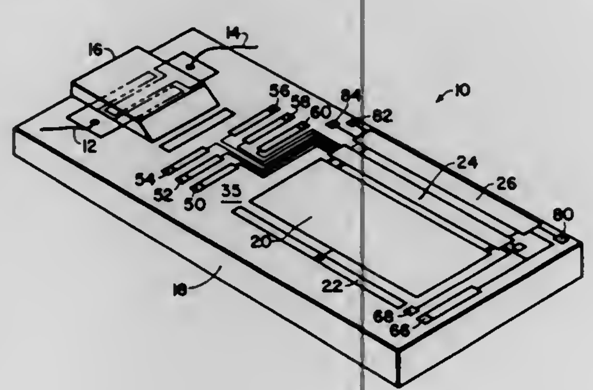

1. An N tapped monolithic circuit acoustic wave filter having amplitude and phase programmability at each tapped output, including a transducer disposed on a surface of a semiconductor substrate for exciting traveling surface waves in response to applied electrical input signals, comprising in combination:

coding means having a first set of input terminals and being responsive to applied signals for deriving N-pair of predetermined bias coding signals said coding means also including a second set of N-input terminals;

a bucket brigade delay line for deriving N-output amplitude weighted signals at N-output terminals to cause the amplitudes of respective ones of said N-pair of coding signals to be varied accordingly, said N-output terminals being coupled to a respective N-input terminal of said coding means, said delay line having an input terminal adapted to receive N-bits of applied direct current (DC) voltages each bit corresponding to a respective N-output signal and first and second clock signal input terminals which are adapted to receive complementary clocking signals to clock said DC voltages respectively to an appropriate one of said N-output terminals, said delay line being integrated within the substrate;

N-pair of piezoresistive detector means integrated into the substrate within the path of the surface waves, each one of said pair of detector means being responsive to respective ones of said N-pair of amplitude varied coding signals for producing N output signals in timed sequence to the surface wave, each output signal having a predetermined phase and amplitude; and

summing means coupled to each output of said N-pair of detector means.

4,065,737
STATIC CONVERGENCE DEVICES FOR COLOR TELEVISION PICTURE TUBES
Albert M. Anthony, Bangor, Mich., assignor to Tracor, Inc., Austin, Tex.
Continuation-in-part of Ser. No. 732,101, Oct. 13, 1976, Pat. No. 4,050,042. This application Oct. 22, 1976, Ser. No. 735,044
Int. Cl.² H01J *29/68*
U.S. Cl. 335—212 **22 Claims**

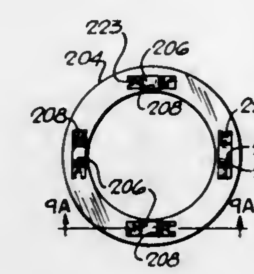

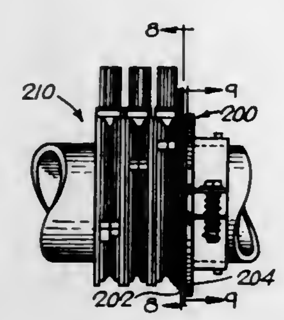

1. A convergence device for television picture tubes, comprising a mounting sleeve having an axial opening for receiving the neck of a television picture tube,

three beam adjusting assemblies supported on said mounting sleeve,

each of said beam adjusting assemblies including a supporting ring member projecting outwardly from said mounting sleeve,

a pair of magnet rings rotatably mounted around said mounting sleeve and stacked with said supporting ring member,

said magnet rings having respective bevel gears formed in one piece with said magnet rings and facing toward each other,

a rotatable generally radial adjusting shaft having a bevel pinion meshing with and disposed between said bevel gears on said magnet rings,

and shaft supporting means on said supporting ring member and supporting said shaft for rotation about a generally radial axis relative to the axis of the mounting sleeve,

said shaft being rotatable to cause rotation of said magnet rings in opposite directions about the axis of said mounting sleeve,

each of said magnet rings being formed with a plurality of magnetic poles,

at least two of said beam adjusting assemblies being rotatable about said supporting sleeve,

and retaining means for retaining said beam adjusting assemblies in stacked relation on said mounting sleeve,

said retaining means including a retaining ring mounted on said sleeve,

a camming ring rotatably mounted on said sleeve between said retaining ring and said beam adjusting assemblies,

spring means disposed between said retaining ring and said camming ring,

and camming means on said camming ring and operable by rotation of said camming ring for producing increased compression of said spring means to increase the clamping force exerted upon said beam adjusting assemblies.

4,065,738
DEFLECTION COIL UNIT COMPRISING TOROIDALLY WOUND COILS FOR A COLOR TELEVISION DISPLAY TUBE
Marius J. A. Elders; Nicolaas G. Vink, and Cornelis van Steen, all of Eindhoven, Netherlands, assignors to U.S. Philips Corporation, Briarcliff Manor, N.Y.
Filed May 30, 1976, Ser. No. 701,310
Claims priority, application Netherlands, July 9, 1975, 7508146
Int. Cl.² H01J *29/66*
U.S. Cl. 335—213 **4 Claims**

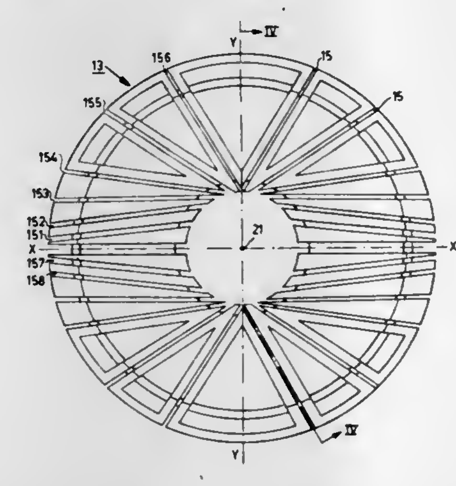

1. A deflection coil unit for use with a colour television display tube, said tube comprising a neck portion, accommodating means for generating electron beams, and a flared portion which comprises a display screen at its widest end, said deflection coil unit comprising a ferromagnetic ring core whose inner surface is adapted to the flared shape, and also two deflection coil systems for deflecting the electron beams in the horizontal and the vertical direction respectively, at least one of the two deflection coil systems comprising a number of individual toroidally wound coils which are distributed along the circumference of the ring core, a part of at least some of the toroidally wound coils which extends along the inner surface of the ring core being situated substantially completely in a groove having two flat side walls, the plane of each of these two side walls being parallel to the axis of the ring core, the plane of at least one of the two side walls of at least one of the grooves not intersecting the axis of the ring core.

4,065,739
REVERSIBLE DIRECTION SOLENOID ASSEMBLY
Wolfgang Jaffe, Roselle Park, and Wesley Robinson Peterson, Bound Brook, both of N.J., assignors to The Singer Company, New York, N.Y.
Filed May 28, 1976, Ser. No. 691,180
Int. Cl.² H01F *7/16*
U.S. Cl. 335—234 **4 Claims**

1. A solenoid assembly which includes a current carrying coil having a throughbore therein and an armature assembly slidably disposed within said coil bore, wherein said armature assembly comprises:

a. a core made of magnetic material; and

b. a flexible sheet wrapped around and attached to a porton of said core within said coil bore, said flexible sheet being

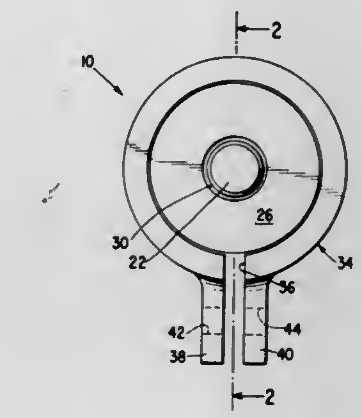

magnetizable material which has been permanently magnetized through its thickness.

4,065,740
ELECTRICAL COIL ASSEMBLY
John E. Earhart; Frank D. Lachenmaier, and John E. McConnell, all of Kokomo, Ind., assignors to General Motors Corporation, Detroit, Mich.
Filed Mar. 28, 1977, Ser. No. 781,674
Int. Cl.² H01F *21/06, 27/30*
U.S. Cl. 336—136 **6 Claims**

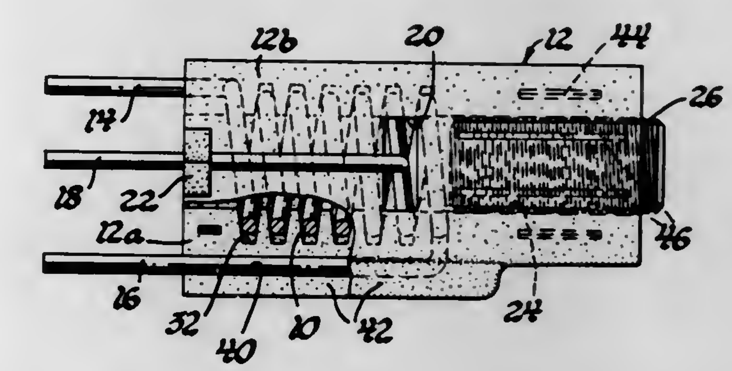

1. A dimensionally stable encapsulated electrical coil assembly comprising; an electrical coil having spaced coil turns formed of wire sufficiently stiff to render the coil initially self supporting but requiring further support for predetermined dimensional stability, the coil terminating in integral terminal leads extending away from the coil, a pair of insulating mating housing portions defining a parting line in a plane substantially on the axis of the coil secured together to enclose the coil, each housing portion having a plurality of integral ribs extending inwardly between the spaced coil turns and contacting the coil turns to securely contain the coil turns, the ribs being spaced about the axis of the coil to resist movement of the coil in the direction of the axis thereof, passages defined in at least one of the housing portions, and the said terminal leads extending through the passages, thereby providing a stable coil assembly surrounded by an insulating housing and having terminal leads extending therefrom.

4,065,741
THERMAL FUSE WITH A FUSIBLE TEMPERATURE SENSITIVE PELLET
Yoshimasa Sakamoto, Otsu; Sadayoshi Iwanari, Kusatsu, and Osamu Umene, Otsu, all of Japan, assignors to New Nippon Electric Co., Ltd., Osaka, Japan
Filed Mar. 29, 1977, Ser. No. 782,415
Int. Cl.² H01H *37/76*
U.S. Cl. 337—407 **6 Claims**

1. A temperature responsive electric fuse comprising an electrically and thermally conductive housing having an open-ended portion, first conductor means secured to said housing, switch means located in said housing in a certain order, said

switch means including a temperature sensitive pellet fusible at a predetermined temperature, a first metallic retaining plate, a first compression spring, a second metallic retaining plate, a slidable resilient contact member, and a second compression spring, an insulator closing said open-ended portion of said housing, second conductor means including lead-in wire means passing through said insulator and having a contact portion at

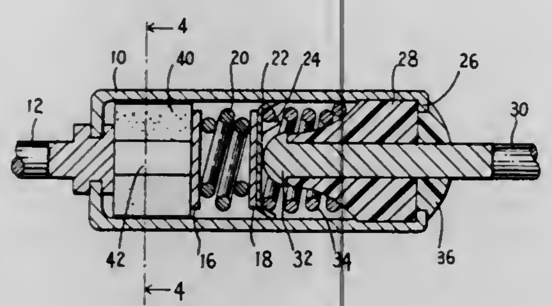

the inner end thereof, and hermetical sealing means of insulating material integrally secured to said housing, to said insulator and to said second conductor means so as to electrically couple said first conductor means to said second conductor means through said resilient contact member, said pellet comprising means for accelerating the fuse action of the pellet to increase the reliability of the fuse when the temperature of said housing rises to a given point.

4,065,742
COMPOSITE SEMICONDUCTOR STRUCTURES
Don Leslie Kendall, Richardson, and Millard Monroe Judy, Dallas, both of Tex., assignors to Texas Instruments Incorporated, Dallas, Tex.
Division of Ser. No. 276,808, July 31, 1972, abandoned. This application June 23, 1975, Ser. No. 589,731
Int. Cl.² H01C *7/06;* **H01L** *27/02, 29/06*
U.S. Cl. 338—9 **4 Claims**

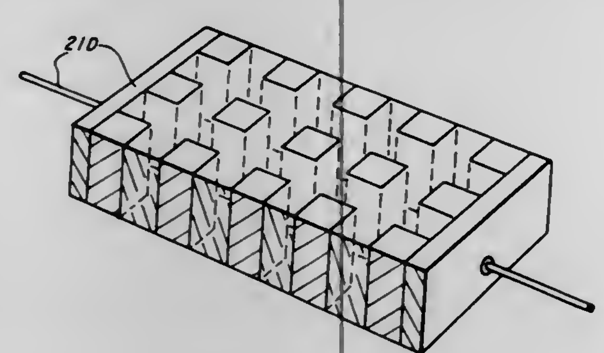

1. A temperature compensated resistor of a semiconductor material having a plurality of conductivities comprising in combination:
N-rows by M-columns of semiconductor mesas of one conductivity and one conductivity type, wherein N and M are integers; and
a second semiconductor material of a second conductivity and said first conductivity type interdisposed between and surrounding said means, wherein said one conductivity material and said second conductivity material having temperature coefficients of resistivity of opposite signs over a desired range of temperatures.

4,065,743
RESISTOR MATERIAL, RESISTOR MADE THEREFROM AND METHOD OF MAKING THE SAME
Richard L. Wahlers, Churchville, and Kenneth M. Merz, Gladwyne, both of Pa., assignors to TRW, Inc., Cleveland, Ohio
Filed Mar. 21, 1975, Ser. No. 560,785
Int. Cl.² H01C *1/012*
U.S. Cl. 338—308 **28 Claims**
1. A vitreous enamel resistor material comprising a mixture of a glass frit and particles of a conductive phase, said conductive phase being selected from the group consisting essentially of (1) a mixture of tin oxide and tantalum oxide, and (2) a

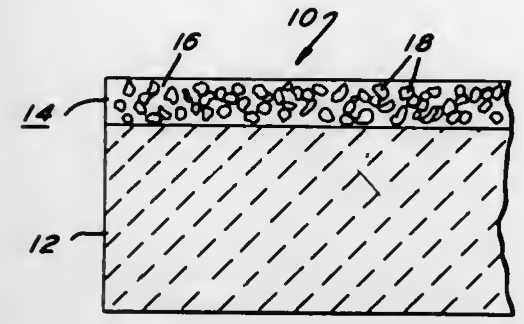

mixture of tin oxide, tantalum oxide and the products resulting from heat treatment of said mixture of tin oxide and tantalum oxide.

4,065,744
DOPPLER NAVIGATION METHOD FOR DETERMINING THE DISTANCE TRAVELLED BY A VEHICLE
Robert Delignieres, Colombes, France, assignor to Institut Francais du Petrole, France
Continuation-in-part of Ser. No. 480,373, June 18, 1974, abandoned. This application May 19, 1976, Ser. No. 687,888
Claims priority, application France, June 28, 1973, 75.23595
Int. Cl.² G01S *9/66*
U.S. Cl. 340—3 D **16 Claims**

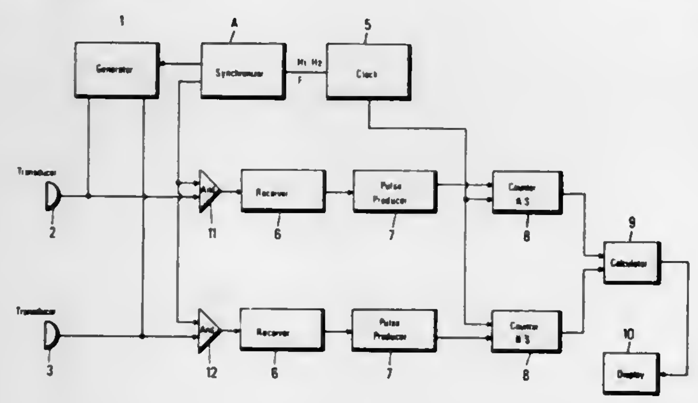

1. A device for determinining the distance travelled by a vehicle movable with respect to a reference surface, comprising means for transmitting signals along at least one transmission direction inclined with respect to the reference surface, means for receiving echo signals corresponding to the transmitted signals on said surface, and means for measuring the distance travelled by the vehicle with respect to said surface, said transmitting means including memory means for storing repetitive data sequences, selection means for selecting the address of the data stored in said memory means and for controlling the extraction thereof, clock means for producing clock pulses defining time scales, means for producing signals whose frequencies are proportional to those of the clock frequencies and which depend on the values of the repetitive data sequences, and control means for activating the selection means in response to signals corresponding to the preselected values of said sequences.

4,065,745
DOPPLER SPEEDOMETER
Kermit Hamlin Robinson, Weston, Mass., assignor to Harnessed Energies, Inc., Maynard, Mass.
Filed May 11, 1976, Ser. No. 685,266
Int. Cl.² G01S *9/66*
U.S. Cl. 340—3 D **27 Claims**
1. A device for determining the speed of a vehicle traveling through a medium, with respect to the ground over which said vehicle is traveling, said device including
means for generating a carrier signal of predetermined frequency,
means for transmitting said carrier signal through said medium in a beam directed at said ground, the center of said beam being at a predetermined angle to the line of travel of said vehicle through said medium,
means for receiving said carrier signal reflected from said ground,

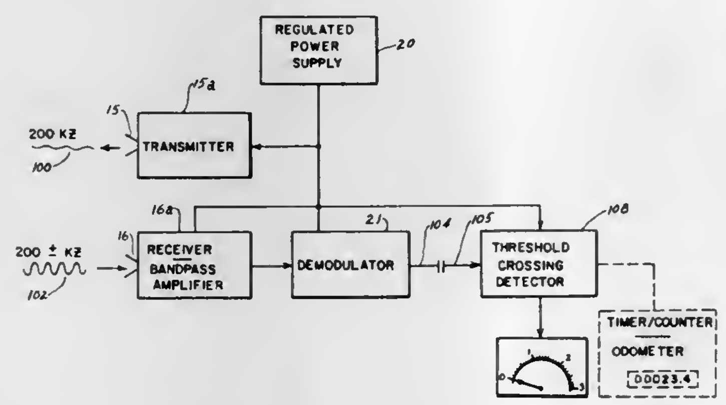

means for detecting the power spectrum of the reflected signal, said power spectrum being a function of speed of said vehicle,
means for detecting a characteristic of said power spectrum for providing an electrical value that is proportional to said characteristic, and
calibrated means responsive to said electrical value for indicating the speed of said vehicle with respect to said ground.

4,065,746
DEVICE FOR MEASURING THE VELOCITY OF A BODY IN AN UNDERSEA ENVIRONMENT
John R. Thompson, Camarillo, Calif., assignor to The United States of America as represented by the Secretary of the Navy, Washington, D.C.
Division of Ser. No. 621,714, Oct. 14, 1975, Pat. No. 4,007,633. This application Oct. 18, 1976, Ser. No. 733,626
Int. Cl.² H04B *11/00*
U.S. Cl. 340—5 S **2 Claims**

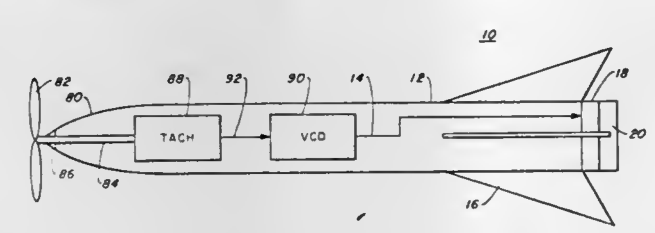

1. An undersea apparatus for generating an acoustical a-c signal whose frequency is a function of said apparatus velocity in an undersea environment comprising:
a. a hollow projectile shaped body having a nose thereon, said body containing an acoustic transducer;
b. an impeller rigidly affixed to a shaft, said impeller being disposed outside said body, said shaft extending from inside said body through said body nose to said impeller, said shaft rotating with respect to said body, said impeller having a speed of rotation functionally related to the speed of said body in the water;
c. means connected to said shaft for generating a direct-current signal whose amplitude is functionally related to the speed of rotation of said impeller, said means being located inside said body;
d. a voltage-controlled oscillator connected to receive said direct-current signal and generate an a-c signal whose frequency is functionally related to the amplitude of said direct-current signal, said a-c signal driving said acoustic transducer, said oscillator located inside said body.

4,065,747
ACOUSTICAL UNDERWATER COMMUNICATION SYSTEM FOR COMMAND CONTROL AND DATA
Hudson Taylor Patten, Westlake Village, and Floyd Baylie Woodcock, Oxnard, both of Calif., assignors to Bunker Ramo Corporation, Oak Brook, Ill.
Filed Nov. 28, 1975, Ser. No. 636,033
Int. Cl.² H04B *11/00*
U.S. Cl. 340—5 R **23 Claims**

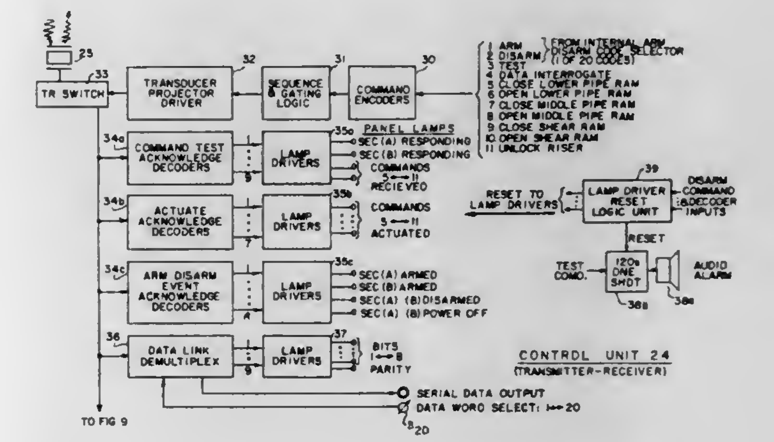

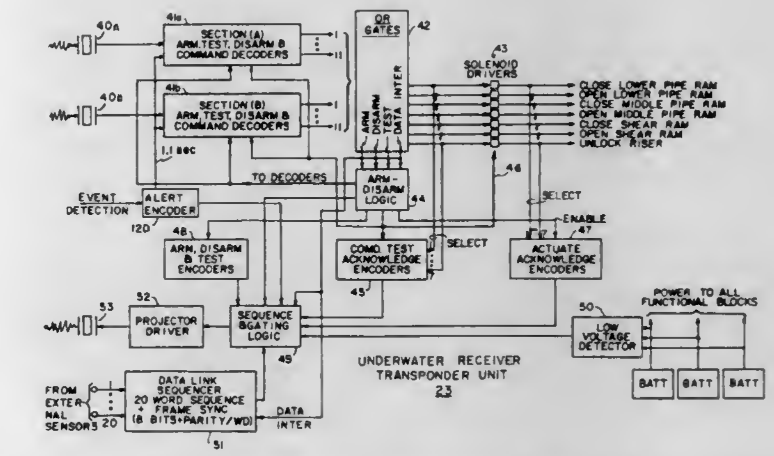

1. A method for emergency communication from a control platform comprising the steps of transmitting from a transmitter-receiver through a transducer in the water near said platform an acoustic code to arm a receiver-transponder adjacent said underwater equipment; transmitting from said receiver-transponder an acknowledgement code to said transmitter-receiver via said transducer to indicate that said receiver-transponder is ready to receive acoustic command codes; transmitting one or more acoustic command codes from said transmitter-receiver to said receiver-transponder via said transducer; transmitting from said receiver-transponder acoustic acknowledgement codes for each acoustic command code received, and launching a diving vessel having a transducer and a transmitter preprogrammed to transmit acoustic command codes to said receiver-transponder as said vessel descends through the water, whereby said diving vessel penetrates through any turbulence in the water near said platform that might occlude acoustic communications to water near said underwater equipment that is free of any turbulence for reliable transmission of acoustic communication codes to said receiver-transponder.

4,065,748
TRANSMITTING AND RECEIVING MULTIPATH SONAR ANTENNA UTILIZING A SINGLE ACOUSTIC LENS
Pierre Maguer, Le Relecq-Kerhuon, and Jean Verveur, Plouzane, both of France, assignors to Etat Francais represente par le Delegue Ministeriel pour l'Armement, Paris, France
Filed June 21, 1976, Ser. No. 697,994
Claims priority, application France, June 20, 1975, 75.20203
Int. Cl.² H04B *13/00*
U.S. Cl. 340—9 **5 Claims**
1. A multipath, emitting and receiving sonar antenna com-

prising, in combination, an acoustic lens comprising a cylindrical enclosure filled with a fluid which focuses received acoustic beams on a focal surface, and at least two intercalated groups of columns of piezoelectric transducers placed on said focal surface, wherein the transducers of each of said at least

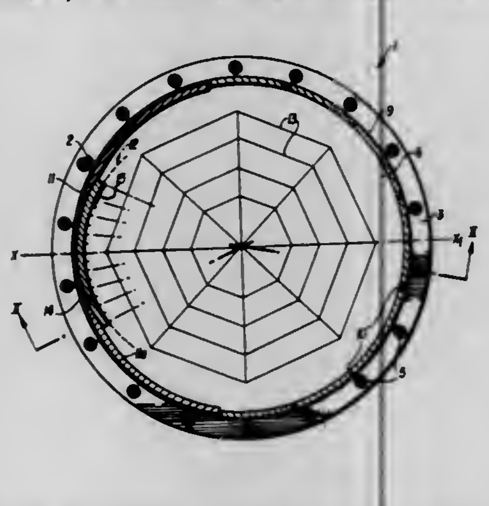

two groups are tuned to a different frequency with respect to the other said group, and the transducers of a common group are excited on the same frequency, with the transducers of one column differing in phase with respect to the next column of the same group.

4,065,749
GEOPHYSICAL PROSPECTING METHODS
Kenneth H. Waters, and George W. Rice, both of Ponca City, Okla., assignors to Continental Oil Company, Ponca City, Okla.
Continuation-in-part of Ser. No. 228,864, Feb. 24, 1972, abandoned. This application July 26, 1976, Ser. No. 708,766
Int. Cl.[2] G01V *1/13, 1/20*
U.S. Cl. 340—15.5 MC **28 Claims**

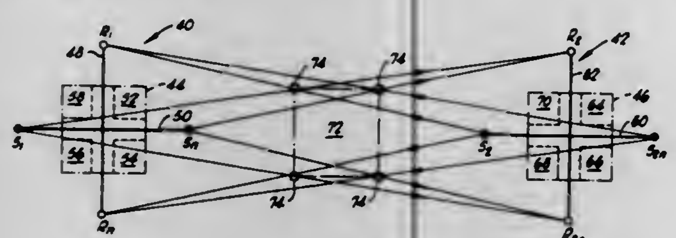

1. A method of geophysical prospecting to derive strike, dip, velocity and related data for a selected stratum underlying an earth area comprising the steps of:
disposing first and second source-receiver cross patterns at first and second spaced positions of said earth area, said cross patterns each including a plurality of aligned seismic energy sources with a plurality of seismic energy receivers positioned transversely thereto;
obtaining first and second local seismic trace data establishing reflection times for events reflected from said selected stratum underlying said first and second spaced positions;
obtaining offset seismic trace data establishing reflection times for events reflected from said selected stratum underlying said earth area at a position intermediate to said first and second spaced positions, said offset seismic trace data resulting from seismic energy emanating from one source-receiver cross pattern and detected at the other source-receiver cross pattern;
utilizing the first and second local trace data to produce parameter signals which define first and second planes under said first and second earth positions which best fit the reflection times of the first and second trace data, respectively, and
utilizing the offset seismic trace data to produce parameter signals which define a third plane under said intermediate earth position which best fits the reflection times of the offset trace data,
said first, second and third planes thereby representing the configuration of said selected stratum underlying said three earth positions, from which strike and dip of said selected stratum may be derived together with velocity of seismic energy between the earth's surface at said positions and the selected stratum.

4,065,750
LOW TIRE PRESSURE WARNING CIRCUIT FOR A TRACTOR/TRAILER COMBINATION
Eugene G. Duncan, Swartz Creek, and James W. Spaniola, Fenton, both of Mich., assignors to General Motors Corporation, Detroit, Mich.
Filed Oct. 18, 1976, Ser. No. 733,346
Int. Cl.[2] B60C *23/02*
U.S. Cl. 340—58 **4 Claims**

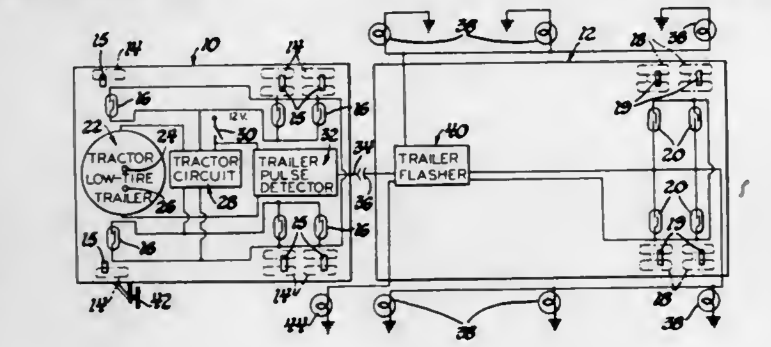

1. In a tractor/trailer electrical circuit having an electrical power supply carried by the tractor and signal lamps carried by the trailer, a low tire pressure warning circuit for indicating in the tractor a low tire pressure event occurring in a trailer tire comprising
a conductive path for supplying electrical power from the power supply to energize the signal lamps,
means for sensing a low tire pressure event occurring in a trailer tire at each revolution of the low pressure tire and providing a corresponding pulsed event signal,
a flasher circuit connected to the said conductive path and effective when enabled for repetitively opening and closing the conductive path to periodically energize the lamps, whereby each time the lamps are energized a current pulse is produced in the conductive path,
a time delay means repsonsive to the pulsed event signal for continuously enabling the flasher circuit for a preset time after an event signal so that the flasher circuit operation continues without interruption during tire rotation, and
means in the tractor for indicating the said low tire pressure event occurring the trailer including an indicating lamp and means responsive to each of the said current pulses for flashing the indicating lamp.

4,065,751
WARNING CIRCUIT FOR A TRACTOR/TRAILER COMBINATION
John A. Stewart, Flint; Roy G. Hynes, Flushing; David G. Beyerlein, Flint, and John B. Force, Bancroft, all of Mich., assignors to General Motors Corporation, Detroit, Mich.
Filed Oct. 18, 1976, Ser. No. 733,347
Int. Cl.[2] B60C *23/02*
U.S. Cl. 340—58 **3 Claims**

1. In a tractor/trailer electrical circuit having an electrical power supply carried by the tractor and signal lamps carried by the traler, a warning circuit for indicating in the tractor an event occurring in the trailer comprising
a conductive path for supplying electrical power from the power supply to energize the signal lamps,
means for sensing an event occurring in the trailer and providing a corresponding event signal,
means responsive to the event signal and connected to the said conductive path for repetitively opening and closing the conductive path at a low rate allowing the signal lamps to substantially cool when the path is opened and the lamps are de-energized, whereby each time the lamps are energized a large current pulse is produced in the conductive path, and

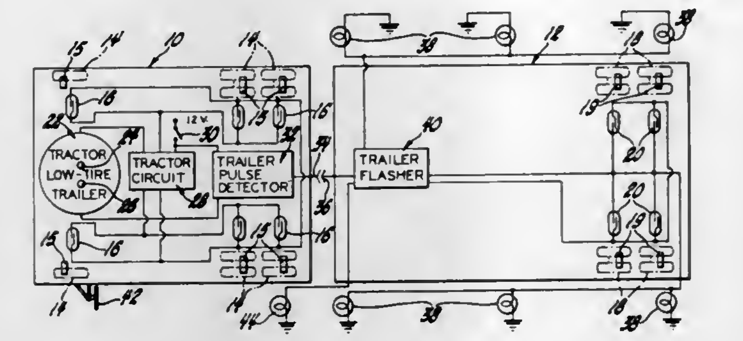

means in the tractor for indicating the said event occurring in the trailer including an indicating lamp, a circuit for detecting the said large current pulses in the conductive path and means responsive to the said large pulses for energizing the indicating lamp.

4,065,752
CHECK DIGIT GENERATION AND VERIFICATION APPARATUS
Leslie Louis Goldberg, 55, Portland Place, London, England
Division of Ser. No. 370,143, June 14, 1973, Pat. No. 3,913,067. This application Oct. 10, 1975, Ser. No. 621,399
Claims priority, application United Kingdom, June 14, 1972, 27806/72
The portion of the term of this patent subsequent to Oct. 14, 1992, has been disclaimed.
Int. Cl.[2] H03K *13/34;* **G06F** *11/10;* **G06K** *5/02;* **H04L** *1/10*
U.S. Cl. 340—146.1 AJ **16 Claims**

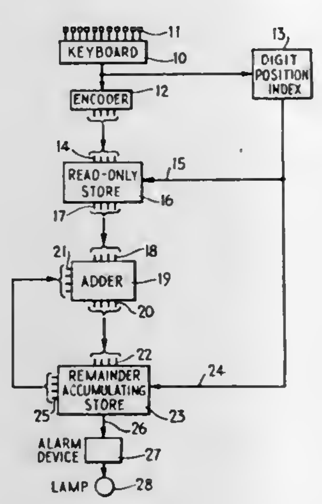

1. A keyboard apparatus for generating check digits for use with sequences of decimal digits, including
a. a plurality of manually-operable keys of which at least ten (referred to hereafter as decimal digit keys) represent the ten respective decimal digits,
b. a plurality of electric switching means associated with the respective decimal digit keys and operative to change from a first to a second switching state on operation of the associated decimal digit key,
c. electric encoding means having input circuit means connected with the respective switching means, and output circuit means at which are delivered electric "digit value" signals representative of the particular electric switching means then in said second switching state,
d. temporary storage means having input circuit means connected with said output circuit means of said encoding means for receiving therefrom said digit value signals, a plurality of separate storage addresses at which successive digit value signals received from the encoding means during the keying-in of a sequence of decimal digits on said decimal digit keys may be stored temporarily until all of the digits of the sequence have been keyed in, output signal control means, a first output circuit means at which in response to the delivery to said control means of a "sequence complete" control signal are delivered the respective digit value signals then stored in the successive storage addresses, in the sequence in which they had previously been stored in those addresses, and a second output circuit means at which an indexing signal is delivered each time a said digit value signal is delivered to said first output circuit means,
e. control signal generating means connected to said output signal control means and operable on completion of the keying-in of a said sequence of decimal digits whereby to supply a said "sequence complete" control signal to said output signal control means,
f. electric indexing means having input circuit means connected with said second output circuit means of said temporary storage means whereby to receive said indexing signals, and electric output circuit means at which are delivered electric "digit position" signals representative of the respective positions, in a sequence of decimal value signals then being delivered at said first output circuit of said temporary storage means, of the successive digit value signals,
g. a "remainder value" signal producing means comprising an electric storage means having separate storage addresses for holding predetermined "remainder value" signals for each of the respective digit values that may appear in each of the respective digit positions in a said sequence, which storage means has first input circuit means connected to receive said digit value signals from said first output circuit means of said temporary storage means, second input circuit means connected to receive said digit position signals from said output circuit means of said indexing means, and output circuit means at which is delivered in response to corresponding digit value and digit position signals delivered to said first and second input circuit means an electric "remainder value" signal obtained from a storage address corresponding to the digit value and digit position of a decimal digit which is represented by said corresponding digit value and digit position signals,
h. an electric "accumulated remainder value" signal storage means having an input circuit means, first and second output circuit means, and a reset circuit means connected to receive 'reset' signals from said output circuit means of said indexing means,
i. an electric adding means having a first input circuit means connected to receive signals from said output circuit means of said signal producing means, a second input circuit means connected to receive signals from said first output circuit means of said signal storage means, and an output circuit means connected to deliver "sum" signals to said input circuit means of said signal storage means, which "sum" signals represent the sum of the signals received at said first and second input circuit means, and
j. an output device connected to receive signals from said second output circuit means of said signal storage means, and having output circuit means at which are delivered, after operation of said control signal generating means whereby to provide a "sequence complete" signal, check digit signals representative of the deviation of the signal then stored in said signal storage means from the nearest multiple of a predetermined modulus number,
each said predetermined remainder value being the excess, over the nearest multiple of the modulus number, of the associated decimal digit value when multiplied by a predetermined multiplier dependent on the position in said sequence of the particular decimal digit.

4,065,753
ELECTROMAGNETICALLY RESPONSIVE PROJECTILE AND SYSTEM FOR DETECTING SAME
Fred R. Paul, Jr., Burnsville, Minn., assignor to Minnesota Mining & Manufacturing Company, St. Paul, Minn.
Filed Sept. 9, 1974, Ser. No. 504,060
Int. Cl.² A61M *31/00;* G01S *9/02*
U.S. Cl. 340—152 T **11 Claims**

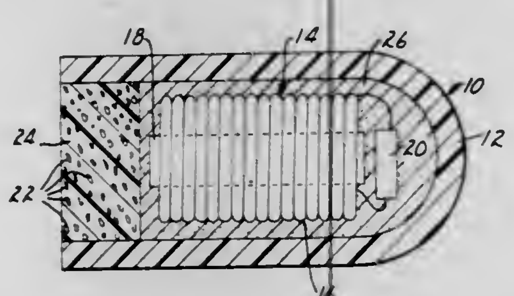

1. A projectile adapted to be shot toward and to threby be implanted into livestock such as cattle for thereafter enabling remote electromagnetic detection and identification of said livestock when they are in an interrogation zone, said projectile comprising a plastic body having outer dimensions including an external diameter of not greater than 0.3 inches (7.5 mm) and a length of not greater than 0.75 inches (19 mm), thereby enabling the non-lethal penetration of the projectile a short distance into said livestock and a passive electromagnetically responsive device sealed therewithin capable of providing an electromagnetic response to an external electromagnetic field to enable remote detection of said projectile.

4,065,754
INPUT DEVICE FOR PROCESSING SYSTEM PROBE CONTROLLED
Genmei Miura, Tokyo, and Kanou Takeshita, Yokohama, both of Japan, assignors to Canon Kabushiki Kaisha, Tokyo, Japan
Filed Jan. 19, 1976, Ser. No. 650,007
Claims priority, application Japan, Jan. 22, 1975, 50-9531
Int. Cl.² G06F *3/14*
U.S. Cl. 340—166 R **7 Claims**

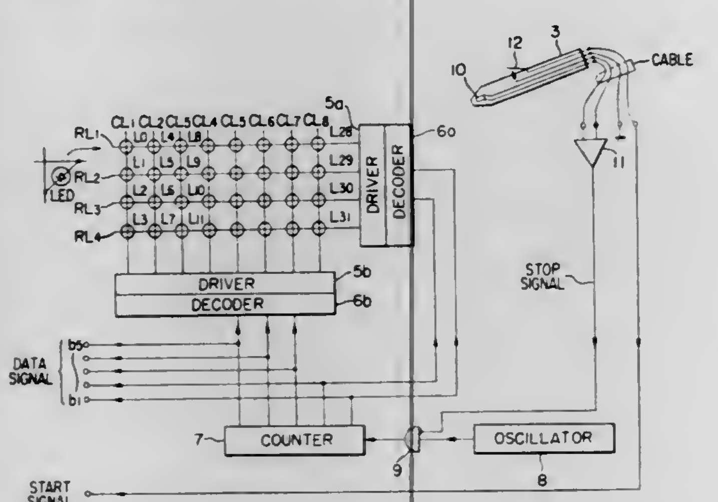

1. An input device for entering selected items of information into a processing system, comprising:
a plurality of conductors defining a matrix having intersecting row and column lines, each intersection of a row line and a column line corresponding to one of said items of information;
a plurality of indication means each one of which is coupled to a respective row and column line at corresponding intersections, wherein an indication signal is produced by each of said indication means in response to energization to corresponding row and column lines;
address means for generating address signals for application to sequentially energize each one of said indication means and to store a selected one of said address signals;
matrix driving means coupled to said address means and said conductors for selectively energizing each one of said indication means in response to the address signals applied by said address means;
probe means coupled to said address means and movably disposed to detect the energization of a selected one of said indication means and for producing a detection output signal;
inhibit means coupled to said probe means and said address means for halting continued sequential application the address signals produced by said address means in response to the detection output signal, wherein the address signal corresponding to the selected indication means is stored in said address means; and
means coupled to said address means for deriving stored address signals for entry into the processing system as said selected items of information.

4,065,755
TOUCH-TONE ENCODER UNIT FOR MOBILE RADIO TRANSMITTER
Joseph P. Oliveira, II, 8060 Willoughby Ave., Hollywood, Calif. 90046
Filed Dec. 16, 1976, Ser. No. 751,033
Int. Cl.² H04M *11/00*
U.S. Cl. 340—171 PF **8 Claims**

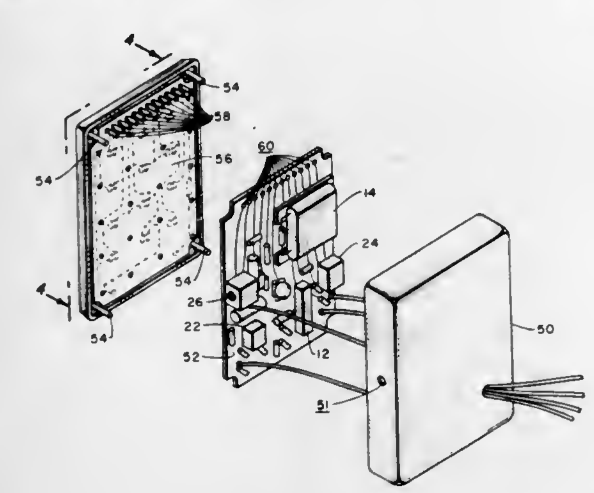

1. A Touch-Tone encoder unit comprising: a housing having an open front; a keyboard having a plurality of pushbutton switches thereon mounted in said housing and providing a closure for the open front thereof; a switching circuit board electrically connected to the pushbutton switches on the keyboard mounted on the rear face of said keyboard and contained within said housing; a further circuit board mounted in said housing adjacent to said switching circuit board and electrically connected thereto; a first circuit means including electric components and circuitry constituting an encoder generator circuit mounted on said further circuit board for producing dual tones as the pushbutton switches on the keyboard are individually depressed; second circuit means mounted on said further circuit board including electric components and circuitry connected to said first circuit means for limiting the duration of each dual tone generated thereby to a predetermined time interval independent of the time during which the corresponding pushbutton switch is depressed; and fastening means for securing said housing to said keyboard to hold the unit in an assembled condition.

4,065,756
ASSOCIATIVE MEMORY WITH NEIGHBORING RECIRCULATED PATHS OFFSET BY ONE BIT
Godavarish Panigrahi, East Windsor, N.J., assignor to Burroughs Corporation, Detroit, Mich.
Filed Mar. 15, 1976, Ser. No. 666,575
Int. Cl.² G11C *15/04, 21/00*
U.S. Cl. 365—49 **11 Claims**

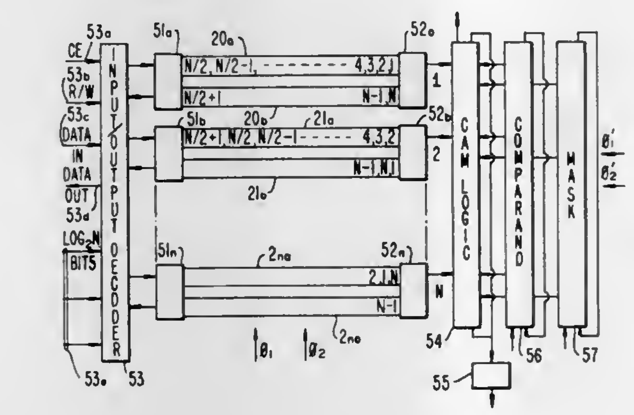

1. An associative memory comprising:
a plurality of circular dynamic memory data paths in each of which one or more series of bits representing words are serially stored such that corresponding significant bits in the respective paths are offset by one bit from corresponding bits in neighboring paths;
comparison logic;
a comparand shift register having individual bit positions being coupled by said comparison logic to individual ones of said memory data paths; and
timing means coupled to said data paths and to said comparand register to shift comparand bits in said comparand register in synchronism with the shifting of all of the data bits in said respective data paths, such that the comparand data bits will be concurrently compared with individual data bits from all of said data paths.

4,065,757
THIN FILM PLATED WIRE MAGNETIC SWITCH OF ADJUSTABLE THRESHOLD
Vahram S. Kardashian, Plymouth, Minn., assignor to Honeywell Inc., Minneapolis, Minn.
Filed June 7, 1976, Ser. No. 693,253
Int. Cl.² G11C *11/155*
U.S. Cl. 365—244 **4 Claims**

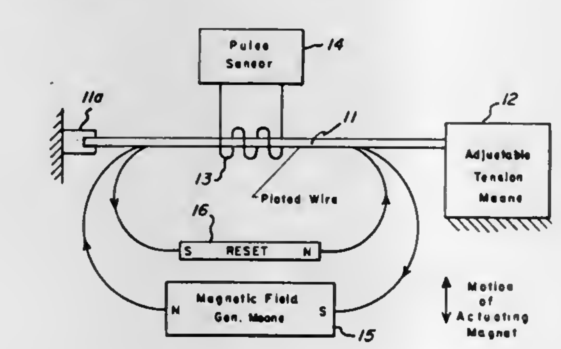

1. An adjustable-threshold bistable magnetically actuated switch for generating an electrical pulse at each switching event, comprising:
a length of wire substrate having an anisotropic magnetostrictive magnetic film covering the wire substrate, the magnetic film having an easy axis of magnetization oriented helically around the wire, the helical magnetization direction being reversible by the application to said switch of external magnetic fields of predetermined magnitude to change the state of the magnetically actuated switch between a first state and a second state and to generate an electrical pulse in said wire substrate with each reversal between said states, said film covered substrate being known as a plated wire;
adjustable tension means fastened to said plated wire for maintaining said plated wire under tension, the switching threshold level of said plated wire being a function of the magnitude of the tension exerted on said plated wire; and
pulse output terminals from said switch.

4,065,758
ALARM DETECTOR RESPONSIVE TO RATE OF CHANGE OF A MONITORED CONDITION
Daniel Barbier, Echirolles; Jean-Michel Ittel, Seyssinet-Pariset, and Robert Poujois, Grenoble, all of France, assignors to Commissariat a l'Energie Atomique, Paris, France
Filed Jan. 2, 1975, Ser. No. 538,218
Claims priority, application France, Jan. 4, 1974, 74.00295
Int. Cl.² G08B *17/06*
U.S. Cl. 340—227 R **15 Claims**

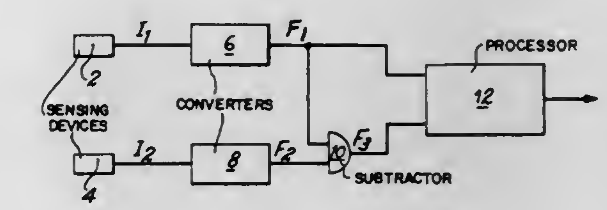

1. An alarm detector comprising:
a sensing device for converting a physical quantity to be detected into an electrical signal whose amplitude is representative of the intensity of said physical quantity,
means for measuring the rate of change of said electrical signal during a predetermined time period,
means for comparing the measured rate of change of said electrical signal with a preset threshold level, and
means for actuating an alarm when said measured rate of change exceeds said threshold level.

4,065,759
SMOKE DETECTOR
Theodore E. Handing, 114 Palo Verde Drive, Brownsville, Tex. 78520
Filed Jan. 7, 1976, Ser. No. 647,096
Int. Cl.² G08B *17/10*
U.S. Cl. 340—237.5 **17 Claims**

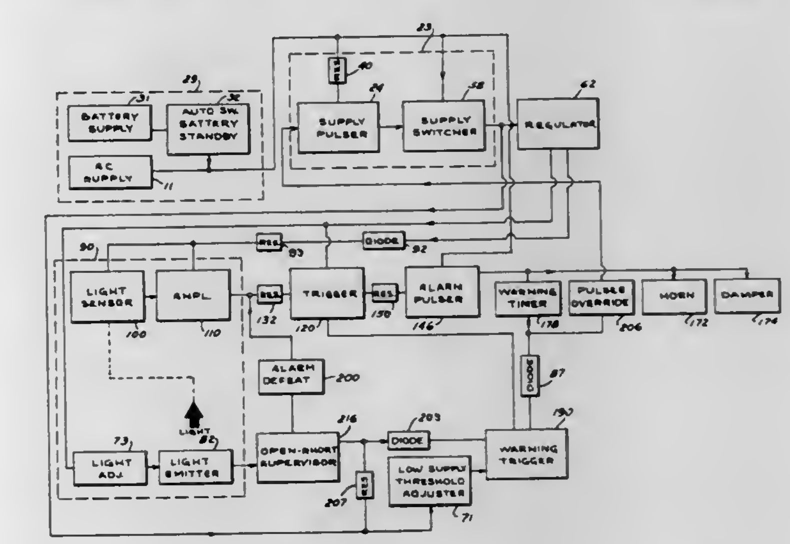

1. A smoke detector operating on the principle of interference of light by smoke comprising:
a. a smoke test chamber;
b. a source of D.C. power including an output and a ground;
c. a pulsed D.C. power supply including an input operationally connected to the source of D.C. power and an output;
d. a pulsed D.C. power supply regulator having an input operationally connected to the output of the pulsed D.C. power supply, and an output;
e. a smoke sensing means including a source of light and a

light receiver in fluid communication with the smoke test chamber and operationally connected to the output from the pulsed D.C. power supply regulator;
f. an alarm trigger having an input operationally connected to the output from the pulsed D.C. power supply regulator and to the output from the smoke sensing means;
g. an alarm pulser having an input operationally connected to the outputs from the alarm trigger and the source of D.C. power; and
h. an alarm means having an input operationally connected to the output from the alarm pulser.

4,065,760
LIQUID LEVEL SENSOR
Arthur Feldon, Van Nuys, Calif., assignor to fea Devices, Inc., Van Nuys, Calif.
Filed Mar. 4, 1977, Ser. No. 774,621
Int. Cl.² G08B *21/00*
U.S. Cl. 340—244 R **12 Claims**

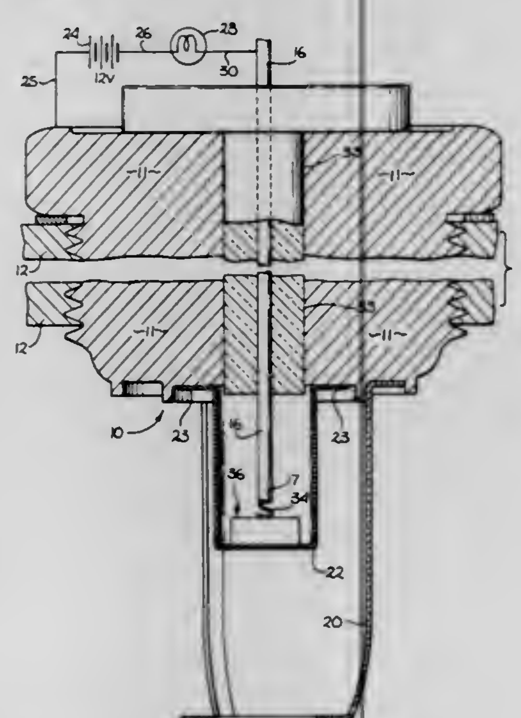

1. An oil level sensor comprising:
a body of semiconductive material having a peak electrical resistivity of between 100 ohm-cm and 200 ohm-cm, said peak resistivity occurring at a temperature between 150° centigrade and 165° centigrade;
a cylindrical cup open at one end, constructed of a metal alloy having a thermal coefficient of conductivity which closely matches that of the semiconductive material said cup being coated on both the inside and outside with a layer of gold;
said body of semiconductor material having a thickness of less than ten one-thousandths of an inch, and a cross sectional area of between 0.015 and 0.035 square inches;
a first conducting means, disposed upon the upper surface of said body of semiconductive material, comprising a first layer of nickel approximately 1 micron thick and a second layer of aluminum of between 6 and 12 microns thick, said first layer of nickel being joined to the upper surface of the second layer of aluminum which is joined to the upper surface of said body of semiconductive material;
a second conducting means, disposed upon the lower surface of said body of semiconductive material, comprising a first layer of nickel approximately 1 micron thick and a second layer of aluminum of between 6 and 12 microns thick, said first layer of nickel being joined to the lower surface of the second layer of aluminum which is joined to the lower surface of said body of semiconductive material;
said first layer of nickel of said second conducting means being joined to the layer of gold on the interior bottom surface of said cup by a solder means less than two-thousandths of an inch thick.

4,065,761
ELECTRICAL INSTALLATION FOR FIRE ENGINE TOWER OR THE LIKE
Richard E. Young, Lancaster, and Timothy D. Ostolski, Buffalo, both of N.Y., assignors to Young Fire Equipment Corporation, Lancaster, N.Y.
Filed Feb. 9, 1976, Ser. No. 656,345
Int. Cl.² G08B *21/00;* H01R *39/00*
U.S. Cl. 340—271 **14 Claims**

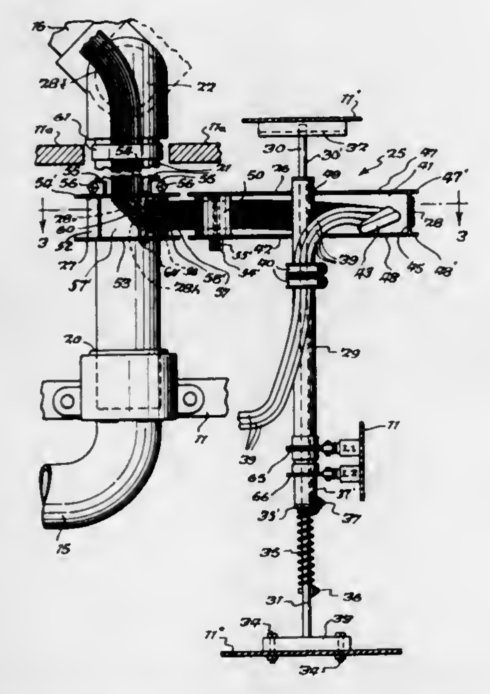

14. A construction comprising a body, a rotatable tower mounted on said body, a tower rotating circuit including continuous wiring connections between said body and said rotatable tower, signal means for indicating the extent to which said tower has been rotated from a predetermined position, an electrical connection in said tower rotating circuit, means for terminating said electrical connection to the tower rotating circuit when said tower has been rotated a given amount from said predetermined position, and means for overriding said means for terminating said electrical connection to the tower rotating circuit.

4,065,762
A.C. BRIDGE INTRUSION ALARM SYSTEM
John W. Walter, 511 Manhasset Woods Road, Manhasset, N.Y. 11030
Filed Dec. 29, 1975, Ser. No. 644,401
Int. Cl.² G08B *13/02*
U.S. Cl. 340—285 **4 Claims**

1. An alternating current alarm system for the protection against unauthorized intrusion having an alarm, comprising:
two adjacent bridge arms, each arm having at least one fixed resistor constituting a sensing resistor, and at least one variable resistor in series with the fixed resistor, constituting a balancing resistor, the combination constituting a rectangular connected electrical bridge circuit;
normally open switch means shunted across at least one of said fixed resistors, said switch means being open in a safe condition of the system and adapted to be closed during an unsafe condition thereof;
an alternating circuit transformer having a secondary winding connected to opposite points of said bridge arms of said bridge circuit, said secondary having a center tap winding connected to a common ground of the system, and
at least one diode connected to the intersection of each variable and fixed resistor in each bridge arm,

a pair of detection latch means each connected to the output of said diodes for detecting a change in the resistance

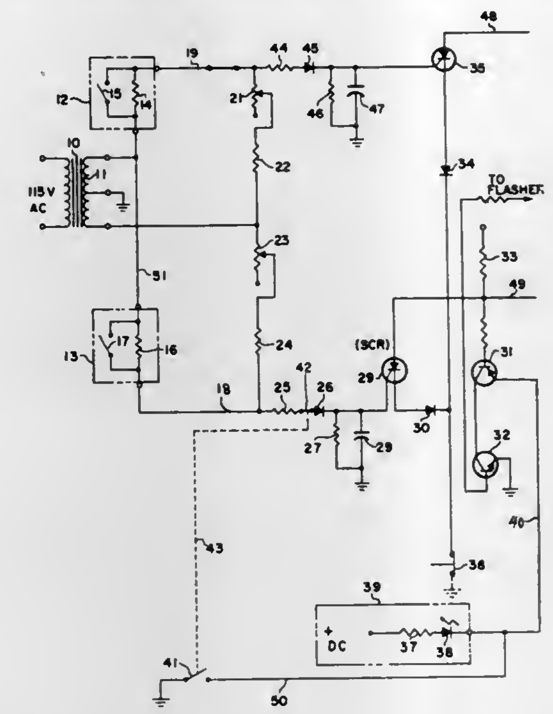

value of said bridge arms and for producing a current in response to said change which actuates said alarm.

4,065,763
DISTRIBUTION NETWORK POWER LINE COMMUNICATION SYSTEM
Ian A. Whyte, Churchill, and Paul H. Haley, Pittsburgh, both of Pa., assignors to Westinghouse Electric Corporation, Pittsburgh, Pa.
Filed Dec. 8, 1975, Ser. No. 638,570
Int. Cl.² H04B *3/56*
U.S. Cl. 340—310 R **18 Claims**

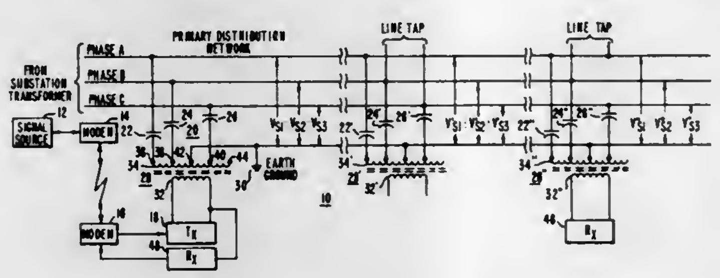

1. A polyphase, power frequency, distribution network power line carrier communication system, comprising:
a plurality of distribution network power line conductors to which a carrier signal is to be coupled,
means providing a carrier signal having a frequency substantially higher than power frequency,
means coupling said carrier signal to each of said conductors to provide a predetermined proportional relationship between the carrier signals of said conductors,
and impedance elements connected between said conductors remote from the signal coupling point, said impedance elements being devoid of connection to said means providing the carrier signal, other than through said distribution network power line conductors, said impedance elements being selected to present a high impedance to power frequency and substantially lower impedances to the frequency of the carrier signal, said impedance elements also being selected to re-establish said predetermined proportional relationship between the carrier signals of said conductors.

4,065,764
LIQUID CRYSTAL DISPLAY DEVICE
Sakae Houryu, Yokohama, Japan, assignor to Canon Kabushiki Kaisha, Tokyo, Japan
Filed Dec. 2, 1975, Ser. No. 637,027
Claims priority, application Japan, Dec. 3, 1974, 49-139227
Int. Cl.² G09F *9/32*
U.S. Cl. 340—324 M **2 Claims**

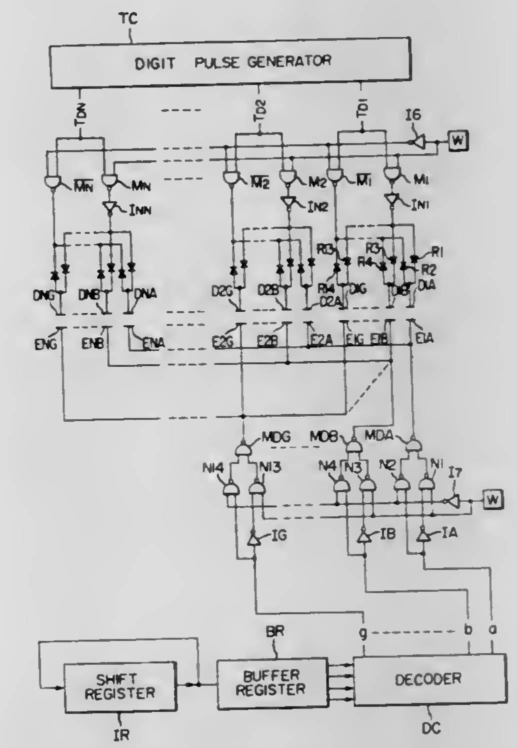

1. A liquid crystal display device comprising:
first register means for storing binary coded numeric information;
second register means coupled to said first register means for sequentially storing single digits of the binary coded numeric information stored in said first register means;
decoder means coupled to said second register means for converting the binary coded numeric information stored in said second register means into display information;
a plurality of first electrodes disposed on a first plate for energization to define a plurality of digits each having a seven bar display format;
a corresponding plurality of second electrodes disposed on a second plate which faces said first plate, each of said second electrodes corresponding, respectively, to ones of said first electrodes;
a plurality of first driving elements coupled to said decoder means and being operative to energize each of said first electrodes in response to said decoder output;
a plurality of second driving elements operative to energize each of said second electrodes;
means coupled to said first and second driving elements for alternating the polarity of driving voltage applied between said pluralities of electrodes from said driving elements; and
pulse generator means coupled to said second driving elements for sequentially selecting at least two electrodes of said second electrode so that only the electrodes corresponding to a particular portion of the display can be energized at a time.

4,065,765
PULSE-WIDTH DEMODULATOR AND INFORMATION STORAGE DEVICE
Peter B. Wagner, Reno, Nev., assignor to The United States of America as represented by the Secretary of the Navy, Washington, D.C.
Filed Aug. 11, 1975, Ser. No. 603,777
Int. Cl.² G06F *3/00*
U.S. Cl. 340—347 DD **10 Claims**

1. A pulse-width demodulator and information storage de-

vice for processing a series of at least a first pair and a second pair of pulse-width modulated words comprising:

a. first data means for receiving said pairs of pulse-width modulated words;

b. a first clocking means responsive to the output of said first means for generating first clock signal pulses that are synchronized with the pulses of said pairs of pulse width modulated words;

c. a first shift register;

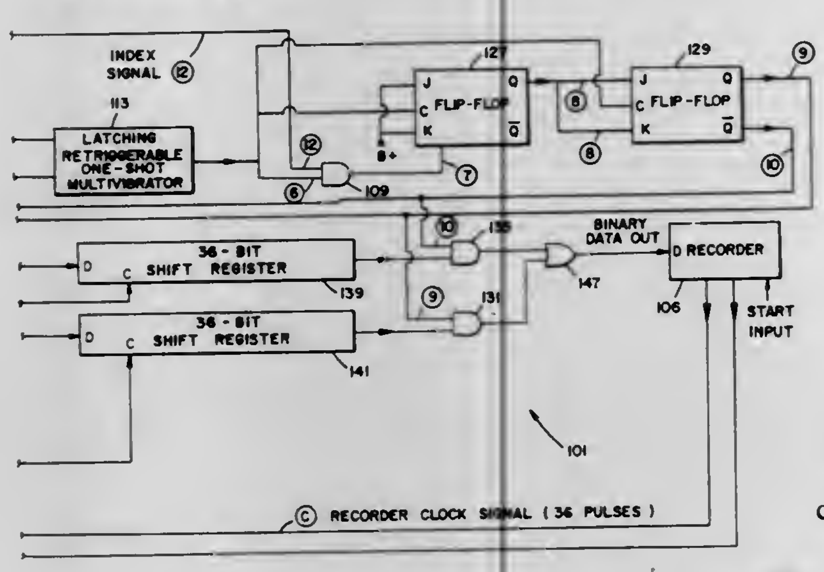

d. a second shift register;

e. second means responsive to the output of said first data means and to output of said first clocking means for alternately shifting said first pair of words into said first shift register and then shifting said second pair of words into said second shift register; and

d. third means for alternately shifting said first pair of words out of said first shift register and then shifting said second pair of words out of said second shift register.

4,065,766
ANALOG-TO-DIGITAL CONVERTER
Walter J. Butler, Scotia, and Charles W. Eichelberger, Schenectady, both of N.Y., assignors to General Electric Company, Schenectady, N.Y.
Filed Mar. 18, 1976, Ser. No. 668,329
Int. Cl.[2] H03K *13/20*
U.S. Cl. 340—347 AD **17 Claims**

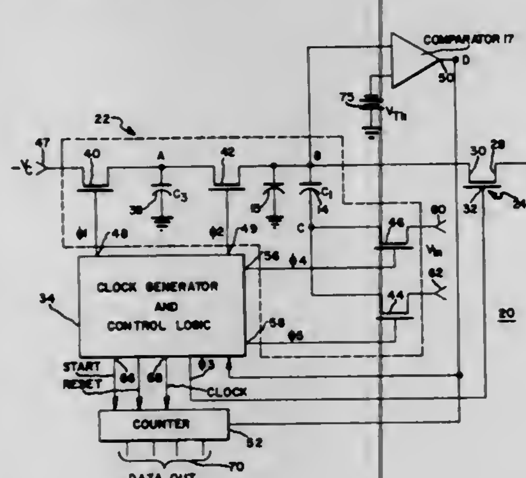

1. In an analog-to-digital converter of the type wherein an analog signal is converted to a digital signal by the transfer of charge into and out of a charge storage location including a linear portion and a nonlinear portion, the improvement comprising:

means for at least partially isolating said linear and said nonlinear portions of said charge storage location; and

means operatively associated with said charge storage location for maintaining the net change in charge stored in said nonlinear portion of said charge storage location at zero from the beginning to the end of the measurement cycle.

4,065,767
PROGRAMMABLE ELECTRONIC SIREN
Jacob Neuhof, Norwalk, Conn., and Robert D. Scott, Owen Sound, Canada, assignors to General Signal Corporation, Rochester, N.Y.
Filed Sept. 1, 1976, Ser. No. 719,644
Int. Cl.[2] G08B *3/00*
U.S. Cl. 340—384 E **14 Claims**

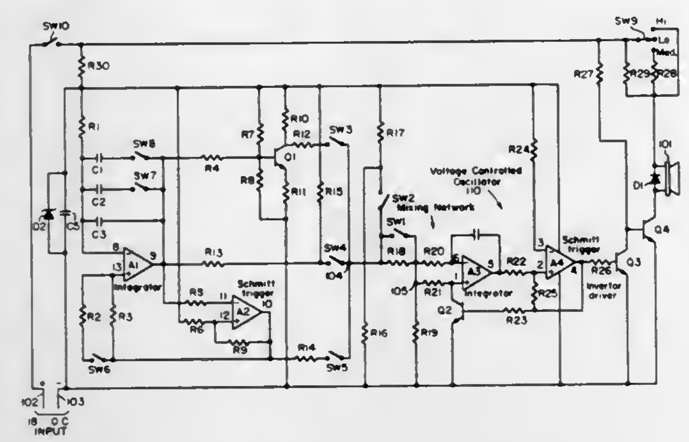

1. An electro-acoustic transformation system comprising in combination:

a. a loudspeaker having a permanent magnet field, a cone and a voice coil for responding to changing currents to move the cone and produce sound;

b. a transistor having its collector-emitter elements coupled in series with the voice coil of said loudspeaker and the series combination coupled across a d.c. power supply; and

c. a voltage controlled oscillator coupled to the base of said transistor for providing a chopped d.c. potential having an on-time of the order of 25 percent to control the conduction of said transistor and concomitantly the current in the voice coil of said loudspeaker and the sound produced by said loudspeaker.

4,065,768
RADAR APPARATUS
Teruo Kondoh; Kazuhiro Ban; Akio Kawamoto; Yoshiki Masuno, and Mitsuhiro Yoshida, all of Amagasaki, Japan, assignors to Mitsubishi Denki Kabushiki Kaisha, Tokyo, Japan
Filed June 30, 1976, Ser. No. 701,252
Claims priority, application Japan, July 1, 1975, 50-81595; July 31, 1975, 50-93564; Aug. 1, 1975, 50-107384[U]; Aug. 29, 1975, 50-105375; Aug. 29, 1975, 50-105376; Oct. 31, 1975, 50-132030; Dec. 4, 1975, 50-144737
Int. Cl.[2] G01S *9/44, 9/24*
U.S. Cl. 343—9 **38 Claims**

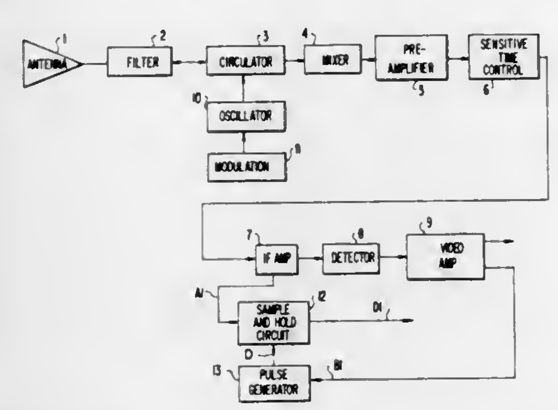

1. A radar apparatus, comprising: a microwave head portion including an antenna adapted to transmit an electromagnetic wave of a first frequency and to receive a reflection wave from at least one target, an oscillator capable of selectively producing said first frequency and a second local oscillator frequency, said oscillator first frequency being connected to said antenna to provide said electromagnetic wave, control circuit means for controlling the time of generation of said first and second frequencies by said oscillator, and a mixer for providing an intermediate frequency signal upon receipt of said reflection wave of said first frequency and a signal wave of said second frequency from said oscillator; an intermediate frequency amplifier circuit responsive to said intermediate frequency signal from said microwave head portion for amplifying said intermediate frequency signal; and signal processing means responsive to said intermediate frequency signals from said mixer for developing conditional signals representative of conditions of said target, said signal processing means comprising, a sampling pulse generation circuit for producing sampling pulses each having a pulse width shorter than the period of said intermediate frequency signal, and a sample and hold circuit means responsive to said sampling pulses for sampling and holding the instantaneous amplitude values of said intermediate frequency signal.

4,065,769
METHOD FOR CHECKING TRANSMITTER-RECEIVER REVERSING SWITCHES IN PULSE-DOPPLER RADAR DEVICES
Pierino Pacozzi, Zurich, Switzerland, assignor to Siemens-Albis Aktiengesellschaft, Zurich, Switzerland
Filed July 19, 1976, Ser. No. 706,918
Claims priority, application Switzerland, Aug. 22, 1975, 10893/75
Int. Cl.[2] G01R *27/00;* **G01S** *7/40*
U.S. Cl. 343—17.7 **1 Claim**

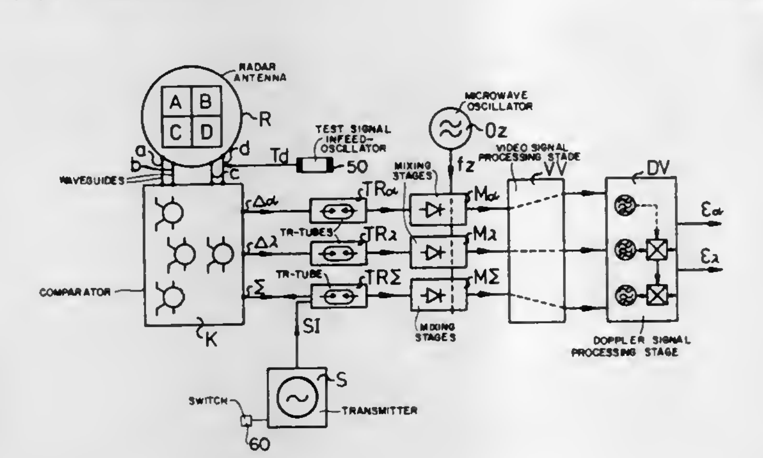

1. A method of testing the functionality of the transmitter-receiver reversing switches of pulse-Doppler-radar installations used in pulse-Doppler-radar devices operating according to the monopulse-summation-difference principle, by measuring the relative throughpass damping, and wherein the transmitter-receiver reversing switches serve for the protection of receiver components during the supply of the transmitter line in the waveguide system, which method comprises the steps of:

delivering a microwave-test signal to the receiver system between the antenna and a subsequently connected comparator;

obtaining with the radar transmitter turned-on angle error voltage outputs in the form of a first azimuth angle-error-voltage value and a first elevational angle-error voltage value;

obtaining a second azimuth angle-error voltage value and a second elevational angle-error voltage value with the radar transmitter turned-off; and

employing the presence of a difference between at least any one of the measured first azimuth angle-error voltage value and the measured second azmimuth angle-error voltage value, or between the measured first elevational angle-error voltage value and the measured second elevational angle-error voltage value, to indicate the presence of a defective transmitter-receiver reversing switch.

4,065,770
DIGITAL SCAN CONVERTERS
Thomas Royston Berry, Malvern, England, assignor to The Secretary of State for Defence in Her Britannic Majesty's Government of the United Kingdom of Great Britain and Northern Ireland, London, England
Filed Apr. 7, 1976, Ser. No. 674,333
Claims priority, application United Kingdom, Apr. 17, 1975, 15973/75
Int. Cl.[2] G01S *7/04*
U.S. Cl. 343—5 SC **8 Claims**

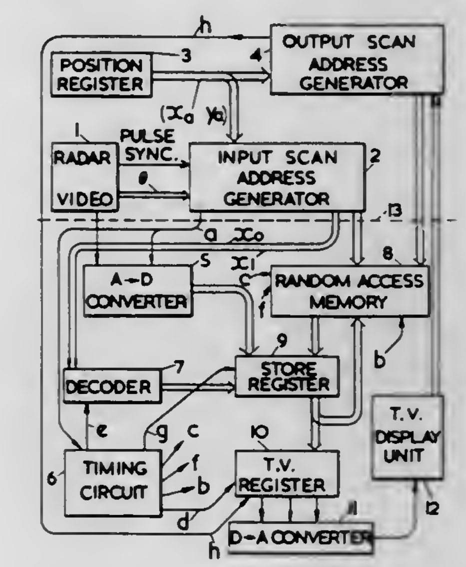

1. A digital scan converter, comprising means for receiving response signals from a mobile surveillance apparatus; means for digitizing the said response signals and providing digital indications of the positions from which the response signals have been returned, in terms of coordinates related to the instantaneous position of the mobile surveillance apparatus; a position register for receiving and storing digital indications of the said instantaneous position; a random-access memory having a multitude of addressible locations in which the digitized response signals may be stored; input scan means for directing the digitized response signals into locations in the random-access memory whose addresses are derived from the said coordinates and the contents of the position register so that each digitized response signal is directed to a location whose address is a function of coordinates of the position from which it was returned to the surveillance apparatus; output scan means for reading out signals from the random-access memory according to a raster scan starting from a location whose address is a function of the contents of the position register; and video display means for providing a visual display in response to the signals read out by the output scan means.

4,065,771
RANDOM SCANNING RECEIVER
Joseph F. Gulick, Clarksville, and Donald R. Marlow, Highland, both of Md., assignors to The United States of America as represented by the Secretary of the Navy, Washington, D.C.
Filed Sept. 14, 1976, Ser. No. 723,258
Int. Cl.[2] H01Q *3/26;* **G01S** *3/42*
U.S. Cl. 343—100 SA **6 Claims**

1. An array antenna receiver for tracking a signal source, comprised of:

means for detecting and amplifying the sum of signals received by all elements of the array, where each sum of signals corresponds to a pattern of array elements randomly selected to be phase-delayed with respect to the other elements,

means, having the detected and amplified sum of signals as an input, for generating an azimuth error signal and an elevation error signal, and

automatic gain control (AGC) feedback means, connected from the azimuth and the elevation error signals generat-

ing means output to provide an input to the amplifier-detector means, for controlling the level of signal pro-

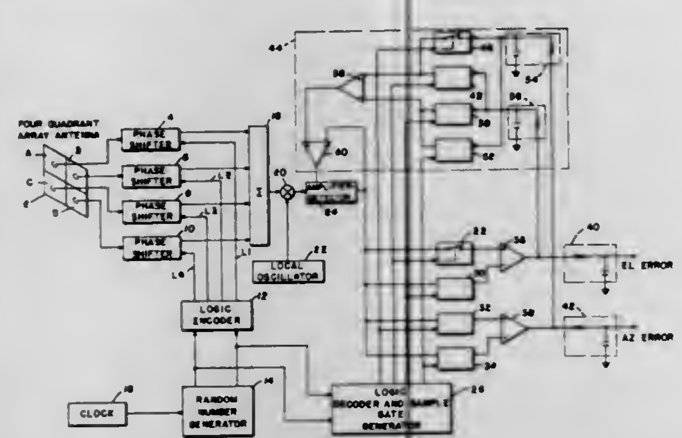

duced by the amplifier-detector means by eliminating unwanted input signal variations.

4,065,772
BROADBEAM RADIATION OF CIRCULARLY POLARIZED ENERGY
John M. Seavey, Cohasset, Mass., assignor to Adams-Russell Co., Inc., Waltham, Mass.
Filed July 6, 1976, Ser. No. 702,750
Int. Cl.² H01Q *13/00, 19/00*
U.S. Cl. 343—786 **13 Claims**

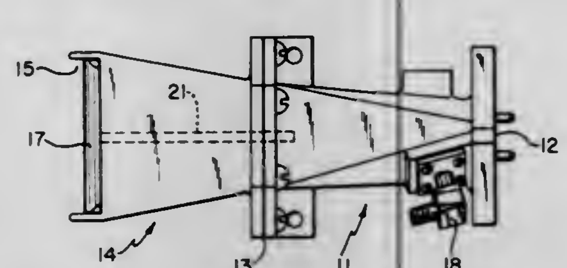

1. Apparatus for radiating elliptically polarized energy over a relatively broad frequency range comprising,
rear launching means having an input port and a square output port for exchanging polarized radiant energy at the input port with radiant energy polarized along a diagonal of the square portion at the output port,
flared horn means having parallel broad walls and a square input port connected to the rear launching means output port and a rectangular output aperture for exchangng linearly polarized energy polarized along said diagonal with elliptically polarized energy at said output aperture,
and a dielectric card in said flared horn portion perpendicular to the parallel broad walls of said horn portion for furnishing a frequency-varying differential phase shift between orthogonal components of wave energy inside said flared portion coacting therewith to substantially compensate for the inherent phase shift in the flare of said horn means for reducing the ellipticity ratio at said output aperture.

4,065,773
METHOD AND APPARATUS FOR GENERATING GRAY TONES IN AN INK JET PRINTER
James M. Berry, Deerfield, Ill., assignor to Teletype Corporation, Skokie, Ill.
Filed Apr. 5, 1976, Ser. No. 673,561
Int. Cl.² G01D *15/18*
U.S. Cl. 346—75 **4 Claims**

1. An apparatus for printing a selected number of ink drops upon a medium at a plurality of discrete dot locations by means of an ink jet which generates a stream of drops at a rate f_d comprising:
means for generating a signal related to the position of the ink jet with respect to each dot location, said signal generating means being asynchronous with respect to said drop rate f_d;
means responsive to said dot signal for generating a pulse in response thereto, the width P_w of said pulse being related to a selected tonal value and determined by the relationship:

$$P_w = (N + X)/f_d$$

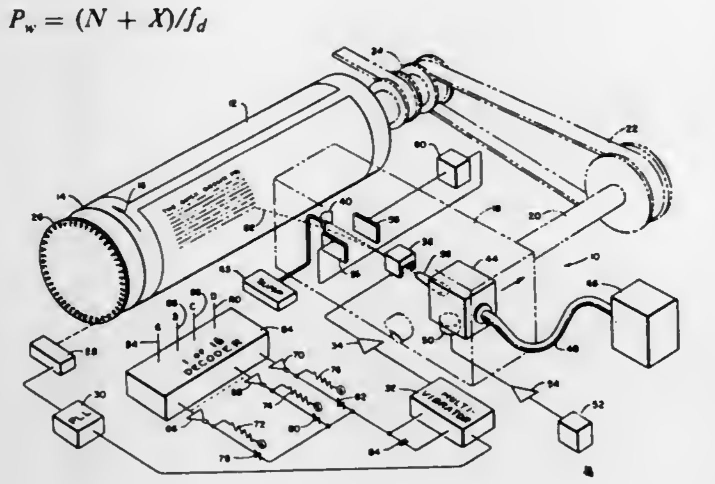

wherein N is a whole number or zero and X is a fractional number less than one;
means responsive to said tonal pulse for directing a number of drops at a dot location on said paper so that the number of drops per dot in a series of dots having the same tonal pulse width P_w will vary by one and the overall tonal shade of the dot series will be equivalent to that which would be obtained by depositing fractional drops at each dot location in the series.

4,065,774
HYBRID FLUID JET DROP GENERATION
Chen-Hsiung Lee, San Jose, Calif., assignor to International Business Machines Corporation, Armonk, N.Y.
Filed May 30, 1975, Ser. No. 582,487
Int. Cl.² G01D *15/18*
U.S. Cl. 346—140 R **6 Claims**

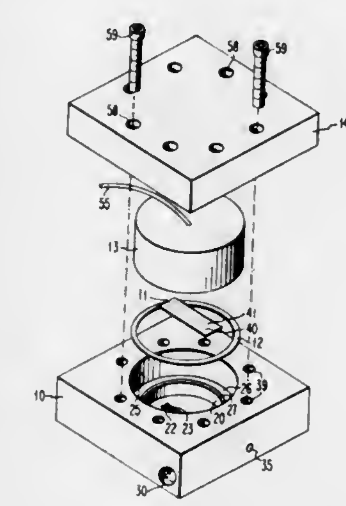

1. In a fluid jet head including a fluid input connected to a source of pressurized fluid, a plurality of nozzle orifices, a cavity communicating with said input and with said nozzle orifices to eject a stream of fluid from each said orifices, and a signal input connected to a perturbation signal source, the improvement comprising:
a perturbation means connected to said signal input and mounted to both vibrate said nozzle orifices in an axial direction and vary the volume of said cavity in response to said perturbation signal, for perturbating the velocity of each said fluid stream to cause each said ejected stream to break into a serial stream of drops;
said perturbation means comprising an electromechanical transducer for establishing a mechanical perturbation in response to said perturbation signal;
said perturbation means additionally forms a wall of said cavity vibrated by said mechanical perturbation to vary the volume of said cavity;
said nozzle orifices are located in another wall of said cavity and said wall is vibrated by said mechanically transmitted perturbation;
a cavity plate forming said cavity and said nozzle orifice locating wall of said cavity; and
a mounting block for clamping said electromechanical transducer between said block and said cavity plate;
for mechanically transmitting said mechanical perturbation to said nozzle orifices.

4,065,775
INK JET WITH UNIFORM DENSITY TRACE CONTROL FOR RECORDERS
Shou L. Hou, Barrington; Leonard P. Dague, Itasca, and Arun K. Agrawal, Elgin, all of Ill., assignors to Gould Inc., Rolling Meadows, Ill.
Filed Dec. 11, 1975, Ser. No. 639,644
Int. Cl.² G01D *15/18*
U.S. Cl. 346—140 R **1 Claim**

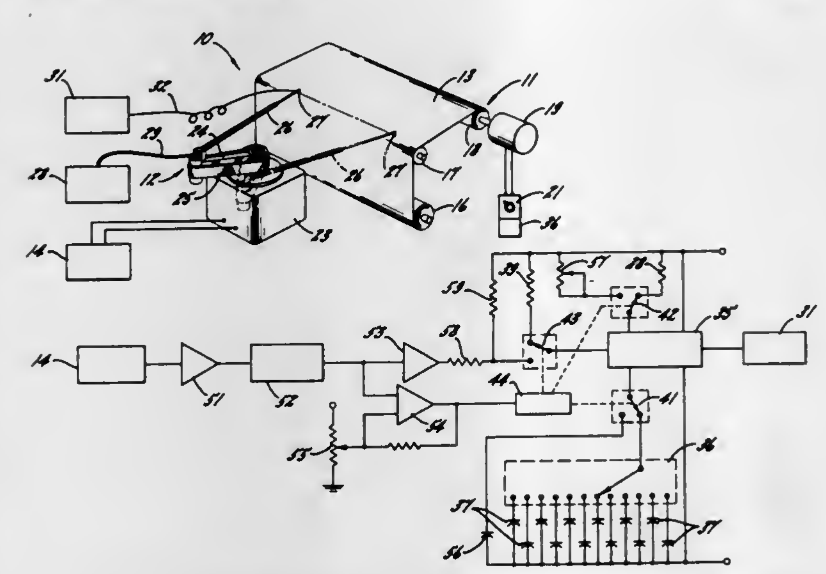

1. In a recorder having a variable speed chart paper drive, a pen motor having a response rate proportional to the signal being recorded, and a variable droplet rate ink jet pen which delivers ink droplets to the chart paper at a rate corresponding to a pen drive frequency, a control system comprising, in combination, a variable rate oscillator for delivering a pen drive signal to said pen through a frequency range from zero to approximately the highest response rate of said pen, a control for setting the speed of said chart paper drive, means responsive to the setting of said control for causing said oscillator to deliver a pen drive signal frequency proportional to movement of the chart paper so that, without pen movement, a uniform line is created by the pen through all chart speeds, means for differentiating said signal being recorded and developing an oscillator sweep controlling signal proportional to the rate of pen movement, and means including a switch for coupling said sweep controlling signal to said oscillator when a predetermined pen movement rate is exceeded so as to thereafter vary the oscillator signal frequency in proportion to the rate of pen movement.

4,065,776
CAMERA WITH AUTOMATIC FLASH EXPOSURE SYSTEM
Hiroshi Iwata, Osaka, and Katsuji Ishikawa, Daito, both of Japan, assignors to West Electric Co., Ltd., Osaka, Japan
Filed Apr. 16, 1975, Ser. No. 568,521
Claims priority, application Japan, Apr. 18, 1974, 49-44102; Apr. 19, 1975, 49-44995
Int. Cl.² G03B *7/10, 7/16*
U.S. Cl. 354—23 D **6 Claims**

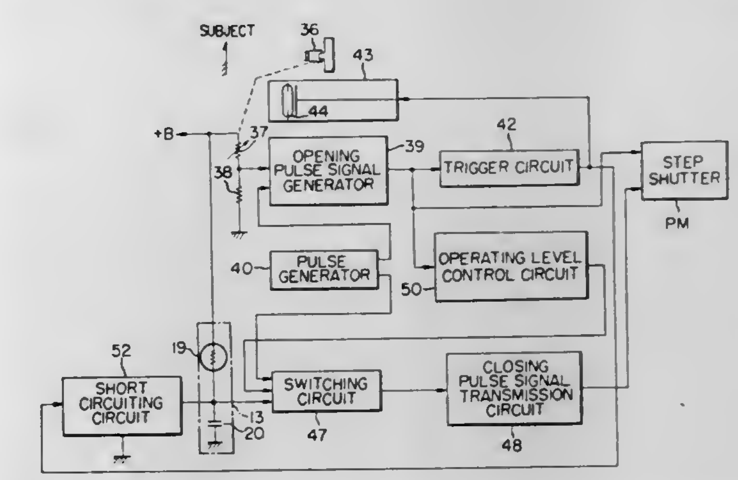

1. In a camera with an automatic flash exposure system, a combination comprising
a. an exposure control mechanism comprising
a plurality of shutter blades which also function as the aperture blades, and
driving means which rotates stepwise in response to driving pulses for opening and closing stepwise said shutter blades;
b. opening pulse generating means for generating and applying to said driving means the opening pulse signal consisting of one or plurality of pulses the number of which is dependent upon the signal representative of the distance to a subject generated by converting means operatively coupled to focusing means of the camera and upon the light flux to be produced by flash means so that said driving means causes said shutter blades to open so as to stop down the camera lens to the optimum *f*-number depending upon said distance and said light flux;
c. trigger means actuable in response to the last pulse of said opening pulse signal to generate the trigger signal for energizing said flash means; and
d. closing pulse signal generating means for generating and applying to said driving means the closing pulse signal consisting of one or a plurality of pulses equal in number to the pulse or pulses of said opening pulse signal a predetermined time after said shutter blades have been started to be opened, thereby causing said shutter blades to close, whereby said shutter blades may stop down the camera lens to an *f*-number depending upon the distance to the subject and the light flux to be produced by said flash means.

4,065,777
PHOTOMETRIC APPARATUS FOR SINGLE LENS REFLEX CAMERA
Yoshihisa Maitani; Kunio Shimoyama; Muneaki Yoshida; Akihiko Hashimoto, and Masahiro Kitagawa, all of Hachioji, Japan, assignors to Olympus Optical Company, Ltd., Tokyo, Japan
Division of Ser. No. 505,956, Sept. 13, 1974, Pat. No. 3,994,001. This application Aug. 24, 1976, Ser. No. 717,089
Int. Cl.² G03B *7/08*
U.S. Cl. 354—23 R **3 Claims**

1. A photometric apparatus for a single lens reflex camera and of the type in which an exposure value is determined by photometry of light which is transmitted through a photographic optical system and which is reflected by at least one of

the surfaces of a shutter blind and a film, comprising a photoelectric transducer element for receiving reflected light from at least one of the surface of a shutter blind and a film, and an operational amplifier for biasing the transducer element so as

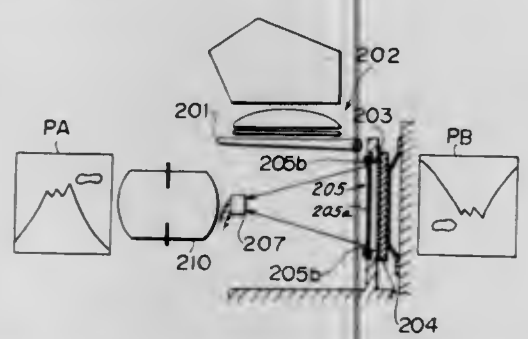

to maintain the voltage applied thereacross substantially null the first blind of the shutter comprising a surface of high reflectivity which forms a light reflecting portion, and a surface of low reflectivity located at an area other than the light reflecting portion.

4,065,778
AUTOMATIC RANGEFINDER AND FOCUSING APPARATUS
Donald Malcolm Harvey, Webster, N.Y., assignor to Eastman Kodak Company, Rochester, N.Y.
Filed June 17, 1976, Ser. No. 696,958
Int. Cl.² G03B *7/10*
U.S. Cl. 354—25 **6 Claims**

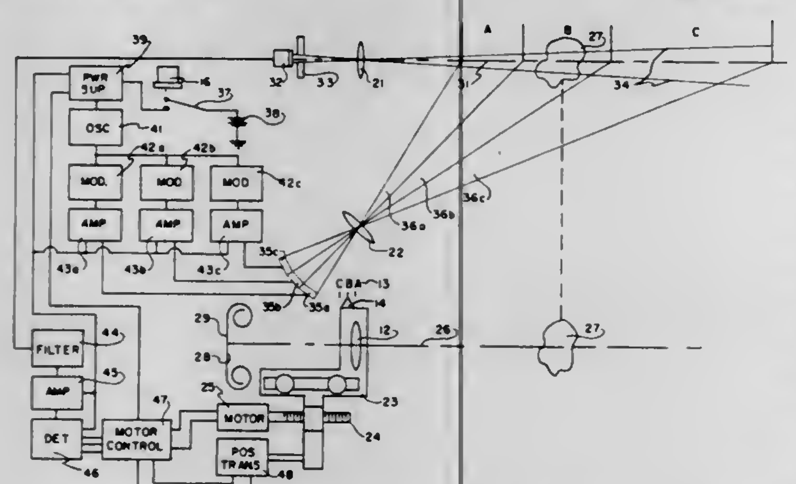

1. An automatic rangefinding device for use in a photographic camera having an objective lens that is adjustable to different focal positions, said device comprising:
a. path defining means defining a predetermined light reception path along which light is transmitted to said rangefinding device,
b. light emitting means spaced from said reception path and adapted to emit light in angular intersecting relation to said reception path to illuminate an object located along a predetermined portion of said reception path, whereby a portion of the light emitted by said light emitting means and illuminating said object is reflected by said object along said reception path,
c. light source characterizing means for providing the light emitted by said light emitting means with a first predetermined characteristic selected to distinguish that light from light originating from other sources,
d. interception location characterizing means for providing the light emitted by said light emitting means with a second characteristic distinguishable from said first characteristic and functionally related to the location along said portion of said reception path at which such light intercepts said path,
e. photoresponsive means for receiving light transmitted along said reception path, said photoresponsive means being adapted to respond only to light having said first predetermined characteristic to produce an electrical output corresponding to said second characteristic when said photoresponsive means receives light having both of said characteristics,
f. lens focusing means for automatically adjusting the focal position of said objective lens as a function of said electrical output.

4,065,779
CAMERA WITH ELECTRONIC FLASH DEVICE
Karl Heinz Lange, Bunde, Germany, assignor to Balda-Werke Photographische Gerate und Kunststoff GmbH & Co., KG, Bunde, Germany
Filed Nov. 15, 1976, Ser. No. 742,392
Claims priority, application Germany, Nov. 29, 1975, 2553843
Int. Cl.² G03B *15/05*
U.S. Cl. 354—145 **7 Claims**

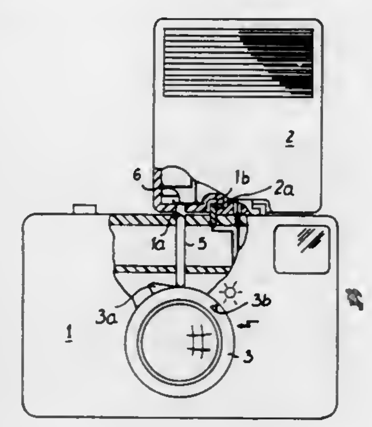

1. In a camera which is adapted to make exposures according to aperture, distance, and exposure-time settings and which also is adapted to make flash exposures, housing means, adjustable means movably carried by said housing means for providing one of said settings, and said adjustable means having with respect to said housing means a predetermined flash position, electronic flash means and connecting means carried in part by said electronic flash means and in part by said housing means for removably connecting said electronic flash means to said housing means, said electronic flash means having a normally open switch which must be closed to render said electronic flash means operable, and switch-operating means carried by said housing means for movement with respect thereto from a rest position to a switch-closing position where said switch-operating means cooperates with said normally open switch to close the latter when said electronic flash means is connected to said housing means by said connecting means, said adjustable means when displaced with respect to said housing means to said flash position thereof engaging said switch-operating means for displacing the latter to said switch-closing position thereof for rendering said electronic flash means operable when said adjustable means is placed in said flash position thereof.

4,065,780
TUNNEL INJECTION OF MINORITY CARRIERS IN SEMI-CONDUCTORS
Joseph M. Ballantyne, Ithaca, N.Y., assignor to Cornell Research Foundation, Inc., Ithaca, N.Y.
Filed Dec. 8, 1975, Ser. No. 638,406
Int. Cl.² H01L *49/02, 33/00*
U.S. Cl. 357—6 **8 Claims**

1. In a multilayer thin-film device having adjacent insulator and semiconductor layers and producing an increased luminescence efficiency, the improvement which comprises:
means to maintain a charge near the insulator-semiconductor interface of proper polarity and sufficient magnitude to create a depletion region in said semiconductor layer that substantially reduces majority carrier tunneling from the conduction band of said semiconductor layer and en-

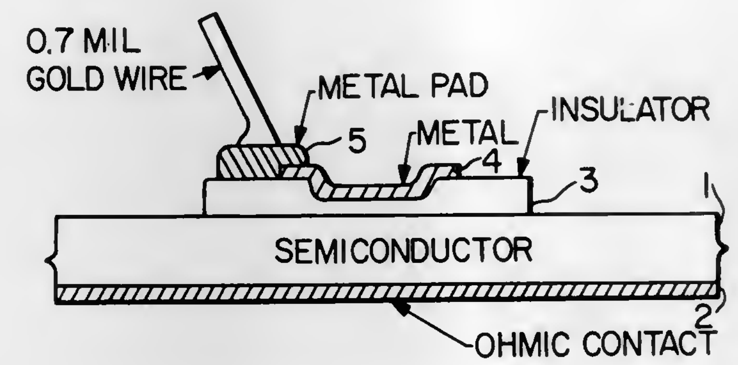

MIS STRUCTURE

hances minority carrier injection into said semiconductor layer and the resulting luminescence.

4,065,781
INSULATED-GATE THIN FILM TRANSISTOR WITH LOW LEAKAGE CURRENT
Peter Gutknecht, Liebefeld, Switzerland, assignor to Westinghouse Electric Corporation, Pittsburgh, Pa.
Filed June 21, 1974, Ser. No. 481,729
Int. Cl.² H01L *29/78, 27/12*
U.S. Cl. 357—23 **8 Claims**

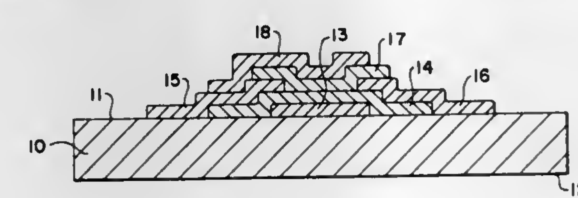

1. An insulated-gate thin film transistor comprising:
A. a substrate having opposed major surfaces and including electrically insulating material adjoining at least part of one major surface;
B. a conductor layer of an electrically conductive material disposed on at least one major surface of the substrate adjoining an electrically insulating material to form a gate electrode;
C. an insulator layer of an electrically insulating material disposed on the conductor layer;
D. source and drain electrodes of electrically conductive material disposed on the insulator layer, said source and drain electrodes being spaced away from each other;
E. a first thin semiconductor layer of semiconductor material in contact with said source and drain electrodes and in contact with said insulator layer at least between said source and drain electrodes; and
F. a second thin semiconductor layer of semiconductor material in contact with the source electrode without contacting said drain electrode and in contact with said first semiconductor layer at least between said source and drain electrodes, said second semiconductor layer being of the opposite type conductivity from the first semiconductor layer and forming a PN junction with said first semiconductor layer between the source and drain electrodes.

4,065,782
FIELD-EFFECT TRANSISTORS
Kenneth Walter Gray, and Huw David Rees, both of Malvern, England, assignors to The Secretary of State for Defence in Her Britannic Majesty's Government of the United Kingdom of Great Britain and Northern Ireland, London, England
Filed Oct. 15, 1976, Ser. No. 732,823
Claims priority, application United Kingdom, Oct. 17, 1975, 42825/75
Int. Cl.² H01L *29/80, 29/78, 29/06, 23/48*
U.S. Cl. 357—23 **8 Claims**

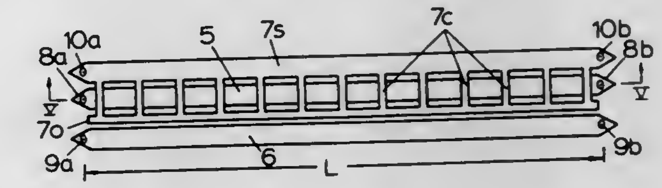

1. A field-effect transistor operable at microwave frequencies, said field-effect transistor having a source electrode, a drain electrode, at least one gate electrode, and an active region between said source electrode and said drain electrode, at least some of said electrodes being elongated transmission lines which have substantial length compared with the wavelengths of microwave signals in said transmission lines, and said transmission-line electrodes extending transversely to the direction of carrier flow from said source electrode to said drain electrode across said active region, whereby in use the phases of signals in said transmission-line electrodes vary continuously with distance along said active region in the direction transverse to the said direction of carrier flow.

4,065,783
SELF-ALIGNED DOUBLE IMPLANTED SHORT CHANNEL V-GROOVE MOS DEVICE
Paul Hsiung Ouyang, 950 Larkspur Ave., Sunnyvale, Calif. 94086
Filed Oct. 18, 1976, Ser. No. 732,551
Int. Cl.² H01L *27/04, 29/78*
U.S. Cl. 357—41 **28 Claims**

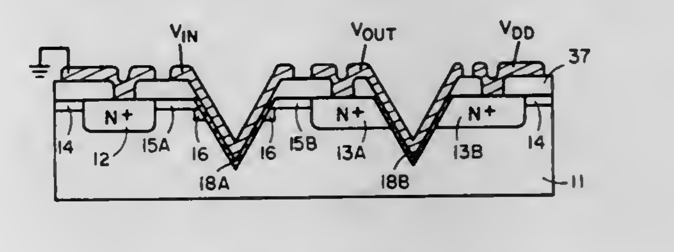

1. A self-aligned insulated gate field effect transistor device, comprising:
a. a lightly p-doped semiconductor body having a surface portion and containing an acceptor dopant concentration of about 10^{13} to 5×10^{15} atoms per cubic cm,
b. N-type diffused drain and source regions selectively located beneath and extending to said surface portion of said semiconductor body,
c. a V-groove adajcent said surface portion and extending into said semiconductor body intermediate said drain and said source regions, said V-groove having first and second side surfaces and first and second end surfaces,
d. a first, thin N-type, layer forming a source extension located beneath said surface portion of semiconductor body extending from said source to said first side surface of said V-groove,
e. a second, thin N-type, layer forming a drain extension located beneath said surface portion extending from said drain to said second side surface of said V-groove,
f. a third, p-type, layer forming a portion of the channel of said transistor, having an acceptor dopant concentration higher than that of said substrate, selectively located beneath portions of said first and said second layers in said

semiconductor body and terminated on all four surfaces of said V-groove,
g. a fourth, thin p-type, layer forming a channel stopper, having an acceptor dopant concentration higher than that of said semiconductor body but lower than that of said first layer, said second layer, said source region and said drain region, located adjacent to and beneath said surface portion of said semiconductor body, and surrounding said first and said second layers, said drain region, said source region, and said V-groove,
h. at least one insulating layer forming a gate dielectric overlying the entire exposed surfaces of said V-groove,
i. at least one conducting layer forming a gate electrode overlying the entire V-groove atop said insulating layer,
j. conductor means in electrical contact with said drain and said source regions.

4,065,784
METHOD AND APPARATUS FOR PCM-ENCODING NTSC COLOR TELEVISION AT SUB-NYQUIST RATE
John P. Rossi, New York, N.Y., assignor to CBS Inc., New York, N.Y.
Filed Sept. 29, 1976, Ser. No. 727,819
Int. Cl.² H04N 9/32
U.S. Cl. 358—13 **9 Claims**

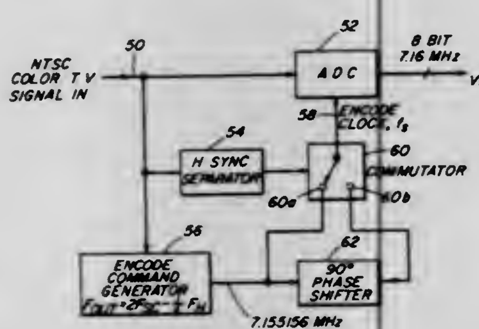

1. A method of digitally encoding an NTSC color television signal having a color subcarrier frequency f_{sc} and a line-scan frequency f_h, comprising the steps of:
generating a first sampling signal having a frequency f_s that differs from $2f_{sc}$ by $\frac{1}{4}f_h$,
sampling the television signals in response to the sampling signal, and
converting the sampled television signal into digital form.

4,065,785
SINGLE SENSOR TIME ENCODED COLOR IMAGING SYSTEM
Willis A. Adcock, and Frank L. Skaggs, both of Dallas, Tex., assignors to Texas Instruments Incorporated, Dallas, Tex.
Filed June 28, 1976, Ser. No. 700,431
Int. Cl.² H04N 9/04, 9/07
U.S. Cl. 358—44 **31 Claims**

27. A color charge transfer imager device comprising, in combination:
a. a charge transfer imaging array having an image receiving surface; and
b. a color filter disposed adjacent to the image receiving surface of said array, said filter having a plurality of regions, first ones of said regions passing two primary colors of light, second ones of said regions passing another two

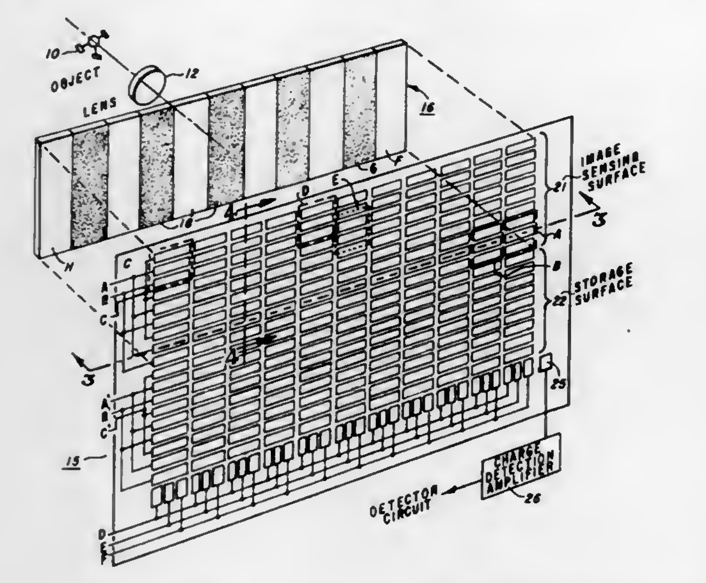

primary colors of light and third ones of said regions only one primary color of light.

4,065,786
VIDEODISC PLAYBACK SYSTEM
Wilber Clarence Stewart, Hightstown, N.J., assignor to RCA Corporation, New York, N.Y.
Filed Sept. 30, 1975, Ser. No. 618,228
Int. Cl.² H04N 5/76
U.S. Cl. 358—128 **13 Claims**

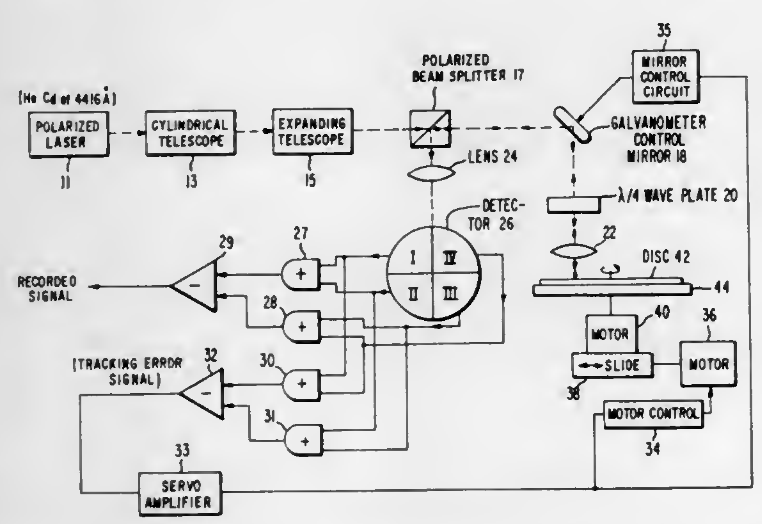

1. An optical playback system for recovering from a record data recorded in an elongated information track on said record, said information track comprising a succession of depressed areas of a given width of a given depth, and of variable lengths, alternating along the length of said information track with relatively non-depressed areas; said system comprising:
a. means for focusing a light spot on said information track, said focused light spot having a first dimension in a direction transverse to the length of said information track which is significantly less than said given width;
b. means for establishing relative motion between the information track and said focused light spot; and
c. light detection means, responsive to the diffraction of said focused light by said information track during the occurrence of said relative motion, for developing electrical signals representative of said recorded data; wherein said light detection means includes means for responding to the overlap of an undeviated zero diffraction order of said diffracted light with one of the plus and minus deviated first diffraction orders thereof to the relative exclusion of the overlap of said zero diffraction order with the other of the plus and minus deviated first diffraction orders.

4,065,787
TIME BASE CORRECTOR
David Peter Owen, Newbury, and Barry Donald Ruberry Miles, Thatcham, both of England, assignors to Quantel Limited, England
Filed Jan. 17, 1977, Ser. No. 760,197
Claims priority, application United Kingdom, Jan. 28, 1976, 3207/76
Int. Cl.² H04N 5/79
U.S. Cl. 358—160 **10 Claims**

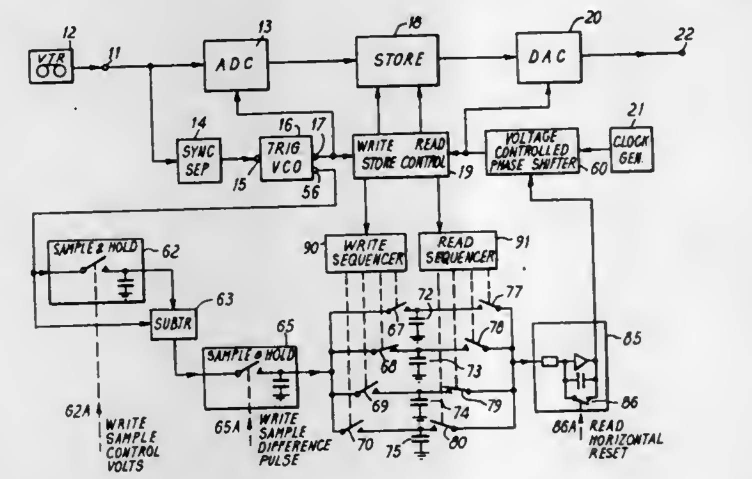

8. A method of compensating for velocity errors in a video time base corrector including an analogue-to-digital converter, a digital store, a digital-to-analogue converter, a triggered voltage controlled input oscillator and an output oscillator, said method comprising:
a. detecting the input oscillator controlling voltage during one line;
b. measuring the difference between the voltage detected during successive lines;
c. retaining the voltage difference measured for at least one line; and
d. phase shifting the output oscillator in dependance on the voltage difference to provide compensation for velocity errors at the output from the store.

4,065,788
REALTIME IMAGE PROCESSOR
Michael J. Meier, Monrovia; Edward C. Adams, La Palma, and Richard W. Lindberg, Garden Grove, all of Calif., assignors to McDonnell Douglas Corporation, Long Beach, Calif.
Filed Feb. 9, 1976, Ser. No. 656,413
Int. Cl.² H04H 5/38
U.S. Cl. 358—166 **22 Claims**

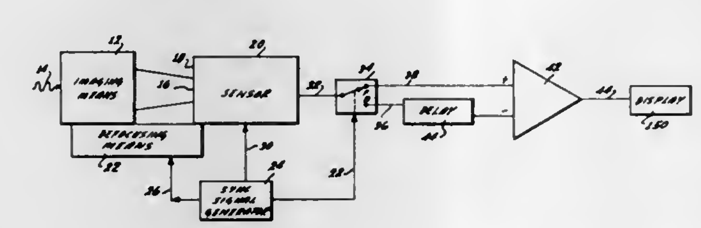

1. For use in a system in which a photosensor repeatedly produces electrical signals embodying an image in response to applied gating signals, apparatus for enhancing the image, comprising:
a. optical means for forming an image on the photosensor and operable to periodically defocus the image in response to an applied defocusing signal;
b. storage means, connected to the photosensor, for generating a reproduction of the electrical signals produced by the photosensor delayed by a predetermined amount; and
c. differencing means connected to said storage means and to the sensor for producing an output difference signal representing the difference between the delayed and undelayed electrical signals produced by the photosensor; whereby signals representing defocused image and signals representing a focused image are subtracted to produce an output signal.

4,065,789
SURFACE WAVE DEVICE FOR USE IN A GHOST CANCELLATION SYSTEM
Adrian J. DeVries, Elmhurst, Ill., assignor to Zenith Radio Corporation, Glenview, Ill.
Filed Jan. 5, 1977, Ser. No. 757,118
Int. Cl.² H04N 5/21; H03H 7/30; H01V 7/00
U.S. Cl. 358—167 **21 Claims**

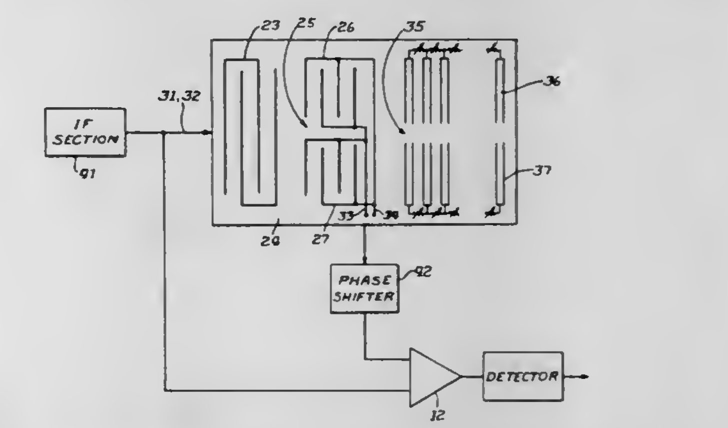

1. An acousto-electric surface-wave signal translating device comprising:
an acoustic surface-wave propagating medium;
an input surface-wave transducer coupled to said medium and responsive to an input signal for propagating a uniform acoustic surface-wave along a predetermined path in said medium;
an output surface-wave transducer coupled to said medium along said path and spaced from said input transducer for developing an output electrical signal only in response to non-uniform exposure to surface-waves; and
reflection means coupled to said medium along said path and spaced from said input and output transducers, said reflection means being responsive to said uniform surface-wave for initiating reflections along said path comprising non-uniform surface-waves for causing said output transducer to develop an electrical output signal comprising delayed replica of said input signal.

4,065,790
VIDEO PROCESSING AMPLIFIER PROVIDING BLACK LEVEL CORRECTION
Eric Siegel, 301 100 St., Brooklyn, N.Y. 11209
Filed Nov. 17, 1976, Ser. No. 742,661
Int. Cl.² H04N 5/18
U.S. Cl. 358—172 **15 Claims**

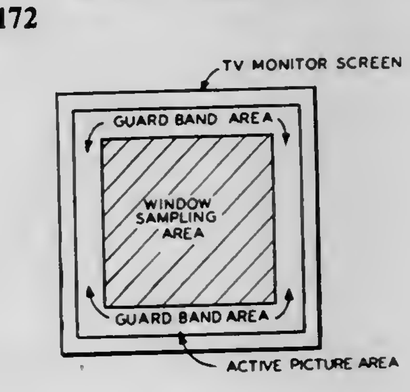

1. In a video processing amplifier having means for receiving a composite video signal input having predetermined video signal characteristics including black level composite sync and composite blanking signals, and means for correcting for any black level distortion present in said composite video signal input for restoring said black level to a substantially undistorted video signal black level, said composite sync signals comprising horizontal and vertical sync and said composite

blanking signal comprising horizontal and vertical blanking signals; wherein the improvement comprises means operatively connected between said composite video input signal receiving means and said black level restoration means for removing said sync and blanking signals from said composite video signal input prior to said black level distortion correction and restoration; and said black level distortion correction and restoration means comprises means for providing a window signal positionable in a central area of the associated video picture produceable from said composite video signal input, said window signal having an associated width greater than an associated width of said vertical blanking signal and an associated width of said horizontal blanking signal by a predetermined amount, said predetermined amount providing a guard band about said window signal for preventing said video processing amplifier from black level sampling of any portion of said composite blanking signal, said window signal comprising a window pulse having an associated positive polarity, and keyed clamp DC restoration means operatively connected to said window signal providing means for receiving said window pulse positive polarity and for keying said keyed clamp DC restoration means on during said central area of said associated video picture information while said positive polarity of said window pulse is present for sampling said composite video signal input and clamping the blackest negative excursions of said composite video signal input to a predetermined positve voltage level, whereby said processing amplifier provides an output composite video signal having said black level restoration.

4,065,791

INTERACTION OF IMAGES WITH STRAIN WAVES TO DERIVE FOURIER TRANSFORM COMPONENTS OF THE IMAGES

Stephen T. Kowel, Liverpool, and Phillipp G. Kornreich, North Syracuse, both of N.Y., assignors to Research Corporation, New York, N.Y.

Continuation-in-part of Ser. No. 493,990, Aug. 1, 1974, which is a continuation of Ser. No. 319,680, Dec. 29, 1972, abandoned, and a continuation-in-part of Ser. No. 499,606, Aug. 22, 1974, which is a continuation-in-part of Ser. No. 493,990, Aug. 1, 1974, and Ser. No. 434,102, Jan. 17, 1974, abandoned, and Ser. No. 365,054, May 30, 1973, Pat. No. 3,836,712, and Ser. No. 576,433, May 12, 1975. This application June 29, 1976, Ser. No. 700,836

Int. Cl.² H04N *3/14*

U.S. Cl. 358—213 **6 Claims**

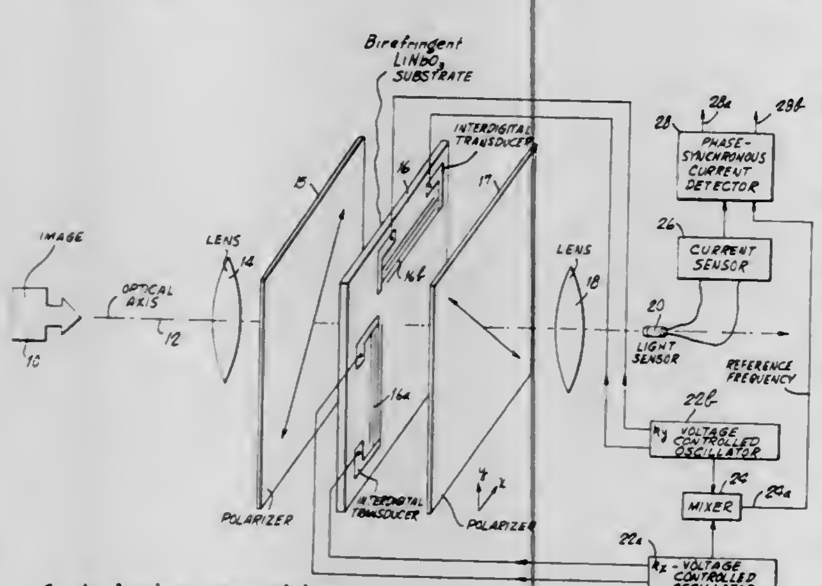

1. A device comprising:

a body of a material and means for forming a light image at a selected image surface of the body;

means for generating at least two acoustic waves propagating along said image surface of the body at intersecting directions and having individually controllable frequency characteristics;

means for deriving electrical signals having frequency characteristics determined by the combination of the frequency characteristics of the two acoustic waves and having electrical parameters representative of the two-dimensional spatial Fourier transform characteristics of the image formed at said image surface of the body;

wherein the body of material comprises an elasto-birefringent substrate having a surface defining said image surface and a first and a second polarizer crossed with respect to each other and flanking the substrate along an optical axis transfers to and intersecting said image surface, and the deriving means comprise means for measuring the light emerging from the combination of the substrate and the polarizers along said optical axis while the acoustic waves propagate along the image surface and while the image is formed at the same surface.

4,065,792

FACSIMILE SYSTEM

Toshitugu Inoue, Kyoto; Takuji Nakamura, Hirakata; Tadayuki Onoda, and Tatuo Nakatugawa, both of Kadoma, all of Japan, assignors to Matsushita Electric Industrial Co., Ltd., Kadoma, Osaka, Japan

Filed July 21, 1976, Ser. No. 707,343

Claims priority, application Japan, July 24, 1975, 50-90887, 50-90889, 50-103190

Int. Cl.² H04N *1/08*

U.S. Cl. 358—286 **12 Claims**

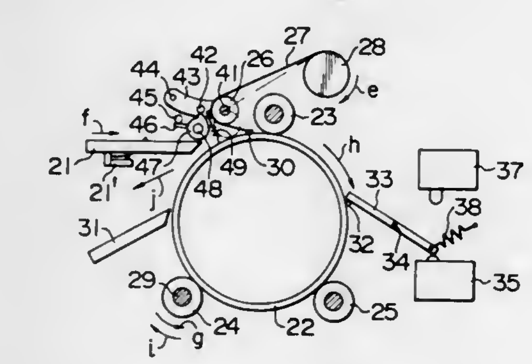

1. A facsimile system comprising a rotatably supported transparent cylinder around which is wrapped a subject copy to be transmitted, a belt having the width extended in the axial direction of said transparent cylinder, one side edge of said belt being securely attached to the surface of said transparent cylinder in the axial direction thereof while an edge of the opposite side is resiliently biased to oppose the extension or drawing of said belt, a pressure roller for pressing said belt against said transparent cylinder, means for selectively moving said pressure roller toward or away from said transparent cylinder, means for rotating said transparent cylinder, and scanning means adapted to rotate and to be displaced in said transparent cylinder, the subject copy being interposed between the outer side surface of said transparent cylinder and said belt.

4,065,793

TRANSLATOR FOR PROCESSING METER TELEMETRY RECORDING CONTAINING POWER LOSS PULSES

Albert H. Maxwell, Jr., Raleigh, N.C., assignor to Westinghouse Electric Corporation, Pittsburgh, Pa.

Filed Oct. 21, 1975, Ser. No. 624,348

Int. Cl.² G01D *15/12*

U.S. Cl. 360—6 **7 Claims**

1. A translator for processing meter telemetry magnetic recording tapes containing time interval and power loss pulses recorded in either of two formats, wherein a first format includes the time interval pulses and the power loss pulses recorded with first and second waveforms, respectively, and wherein a second format includes only time interval pulses recorded with one of said first and second waveforms, said translator comprising:

pulse shaping means receiving the recorded waveforms and producing a first signal pulse corresponding to said first waveform and a second signal pulse corresponding to said second waveform, said first signal pulse having a longer duration than said second signal pulse;

pulse duration recognizing means receiving said first and second signal pulses and producing an output pulse at a first terminal only when said first signal pulse is applied to the recognizing means and further producing an output pulse at a second terminal only when said second signal pulse is applied to the recognizing means;

first gating means responsive to said output pulses produced at both of said first and said second terminals and transferring pulses corresponding to the time interval pulses to a first output for further processing in the translator;

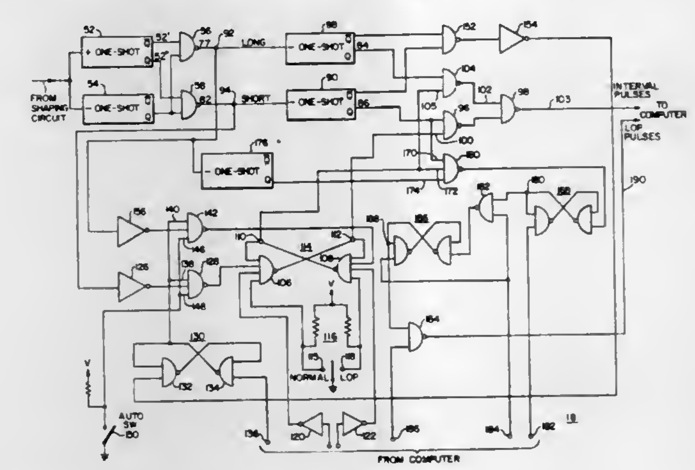

a second gating means responsive to said output pulses produced at one of said first and second terminals and transferring a pulse corresponding to a power loss pulse to the a second output for further processing in the translator; and

means selectively enabling and disabling said first and second gating means in at least two conditions, said first condition effecting response to said second recording format to only produce said time interval pulses at said first output, and said second condition effecting response to recordings in said first format to produce said time interval pulses and said power loss pulses at said first and second outputs, respectively.

4,065,794

PLAYBACK TECHNIQUE FOR AN AUDIO-VIDEO PROGRAM WHEREIN THE VIDEO DISPLAY IS CONTROLLED BY SIGNALS RECORDED AS A PART OF THE AUDIO PROGRAM

Harold B. Shutterly, Edgewood Boro., Pa., assignor to Westinghouse Electric Corporation, Pittsburgh, Pa.

Filed Dec. 4, 1975, Ser. No. 637,552

Int. Cl.² H04N *5/785;* **G11B** *27/30*

U.S. Cl. 360—10 **9 Claims**

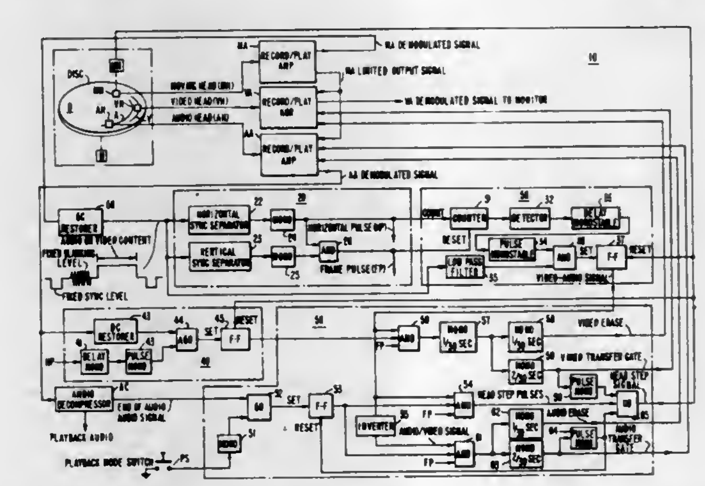

1. A method for reproducing the audio frames or fields and the video frames or fields of an audio/video program from sequential access storage media wherein the audio frames consist of audio lines of time compressed audio information in television line format and video change signals indicating the time for displaying the video frames corresponding to the audio, comprising the steps of:

reproducing audio frames consisting of audio lines of time compressed audio information in television line format including video change signals indicating the time for displaying the video frames corresponding to the audio,

detecting the presence of the video change signals in each reproduced audio frame, and

reproducing the video frames corresponding to each reproduced audio frame in response to the detected video change signals.

4,065,795

RECORDING TECHNIQUE FOR AN AUDIO/VIDEO PROGRAM WHEREIN THE AUDIO INCORPORATES VIDEO CHANGE SIGNALS

Harold B. Shutterly, Pittsburgh, Pa., assignor to Westinghouse Electric Corporation, Pittsburgh, Pa.

Filed Dec. 4, 1975, Ser. No. 637,551

Int. Cl.² H04N *5/785;* **G11B** *27/30*

U.S. Cl. 360—35 **3 Claims**

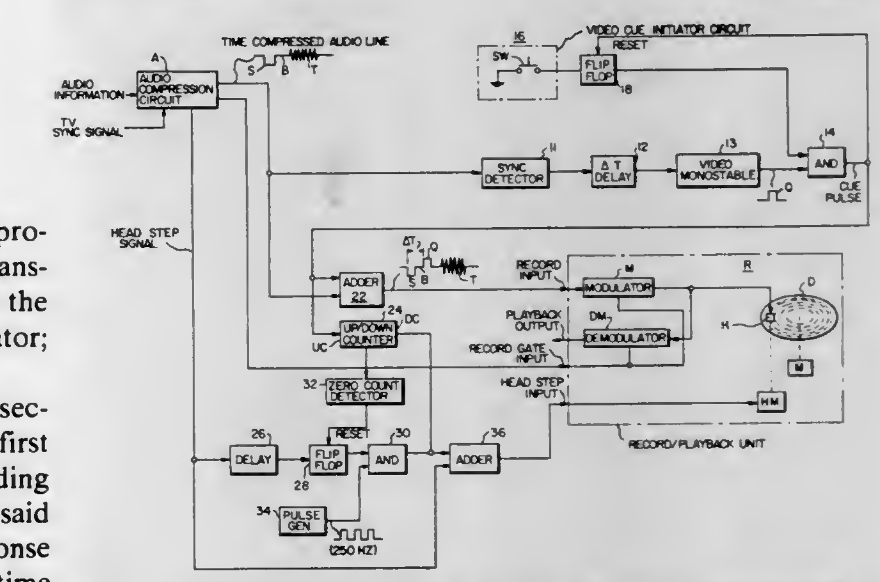

1. A method for recording the audio frames or fields and the video frames or fields of an audio/video program on a sequential access storage medium, comprising the steps of:

recording audio frames consisting of compressed audio information in television line format on the sequential access storage medium,

inserting video change signals at predetermined locations within the recorded audio frames, and

recording video frames corresponding in number to said predetermined number of video change signals in a sequential manner on said sequential access storage medium following said recorded audio frames.

4,065,796

DIGITAL DATA DECODER

Scott Alan Dehart, Loveland, Colo., assignor to Hewlett-Packard Company, Palo Alto, Calif.

Filed Sept. 22, 1976, Ser. No. 725,210

Int. Cl.² H04L *7/00;* **G11B** *5/09*

U.S. Cl. 360—51 **6 Claims**

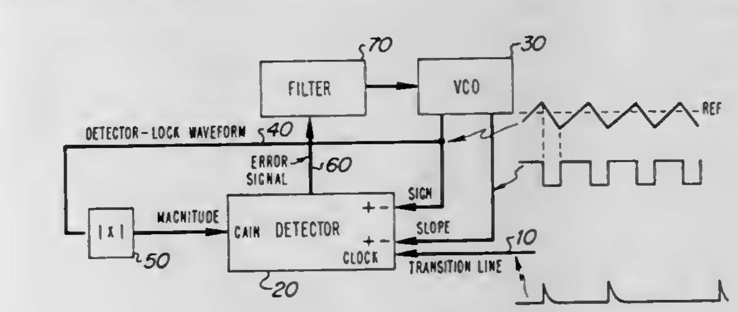

1. A synchronizer responsive to an input signal, which includes a sequence of reproducible changes; the synchronizer comprising:

a variable oscillator having an input and first and second outputs, for producing a periodic triangle waveform on the first output having a frequency responsive to a signal applied to the input, and for producing a signal on the second output having a first or a second value corresponding to a positive or negative slope on the first output, respectively;

a magnitude detector with an input and an output, the input responsive to the first output of said variable oscillator, for producing an output signal responsive to the absolute magnitude of the difference between the input thereto and a reference value;

circuit means with first and second inputs coupled to the first and second outputs of said variable oscillator, respectively, a third input coupled to the output of said magnitude detector, a fourth input responsive to the input signal, and an output, for generating an output signal upon the detection of a reproducible change upon the fourth input, the output signal having a magnitude responsive to the third input and having a first polarity if the first input is greater than the reference value and the second input has the first value, having a first polarity if the first input is less than the reference voltage and the second input has the second value, having a second polarity in other cases;

a filter with an input coupled to the output of said detector and an output coupled to the input of said variable oscillator for low pass filtering the signal thereto and producing an output representative of the low pass fltered input.

4,065,797
MULTI-ELEMENT MAGNETIC HEAD
Noboru Nomura, Kyoto; Kenji Kanai, Neyagawa; Nobuyuki Kaminaka, Moriguchi, and Norimoto Nouchi, Katano, all of Japan, assignors to Matsushita Electric Industrial Co., Ltd., Kadoma, Japan
Filed Dec. 16, 1975, Ser. No. 641,224
Claims priority, application Japan, Dec. 20, 1974, 49-147384; Dec. 24, 1974, 49-2743; Dec. 24, 1974, 49-2742
Int. Cl.² G11B *5/12*
U.S. Cl. 360—113 **13 Claims**

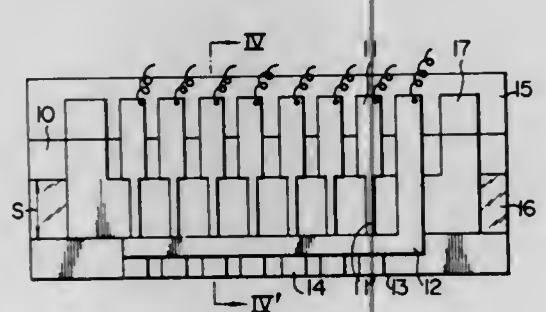

1. A multi-element magnetic head for use with a recording medium comprising

a base composed of a ferromagnetic material, said base having a groove in the surface thereof filled with a non-magnetic material and extending parallel to a face of said base adapted for contact with said recording medium; and

a plurality of magnetoresistive effect elements composed of a ferromagnetic material arranged on and bridging said groove, each said magnetoresistive effect element forming a magnetic circuit together with said ferromagnetic base, the resistance of said magnetoresistive effect element changing in accordance with an applied magnetic field.

4,065,798
CLEANING CARTRIDGE
Tsutomu Sugisaki, and Hideomi Watanabe, both of Odawara, Japan, assignors to Fuji Photo Film Co., Ltd., Minami-Ashigara, Japan
Filed Aug. 26, 1976, Ser. No. 717,836
Claims priority, application Japan, Aug. 26, 1975, 50-117302[U]; Aug. 26, 1975, 50-117303[U]
Int. Cl.² G11B *5/41*
U.S. Cl. 360—128 **2 Claims**

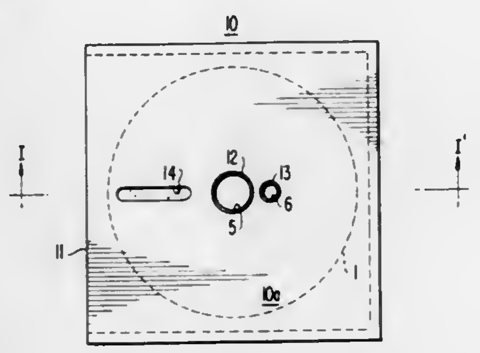

1. A cartridge for cleaning magnetic heads for use with a flexible disc which comprises:

a cleaning disc comprising a flexible and non-magnetic support, a magnetic layer provided on both surfaces of the flexible and non-magnetic support, and a fibrous material layer for contact with the magnetic head for cleaning thereof provided on one layer of the magnetic layers; and a flat box-like cartridge with a lubricant layer provided on the inner surface of the flat box-like cartridge which faces the exposed magnetic layer of the cleaning disc, which flat box-like cartridge rotatably accomodates the cleaning disc.

4,065,799
MEANS AND METHOD FOR CLAMPING A DISK PACK
Steven L. Kaczeus, Boulder, Colo., assignor to Storage Technology Corporation, Louisville, Colo.
Filed Feb. 2, 1976, Ser. No. 654,196
Int. Cl.² G11B *25/04*
U.S. Cl. 360—135 **21 Claims**

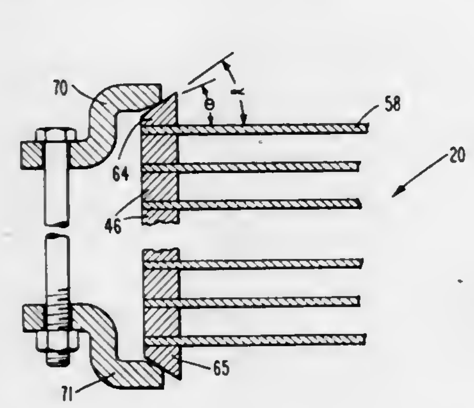

9. In a magnetic disk subsystem of the type including a stack of axially aligned magnetic disks having concentric apertures therein, a spindle for rotatably supporting the stack, and an access mechanism having transducers adapted to be electromagnetically coupled to ones of the disks, means for applying axial pressure to the stack, comprising:

a clamping hub having a peripheral surface whose diameter is greater than the diameter of the apertures in the disks, said peripheral surface overlying the uppermost one of the disks;

a clamping ring disposed between said clamping hub and the end one of the disks and having a lower surface substantially parallel with the upper surface of said disk and an upper surface extending at an angle α to the upper surface of said disk; and

tensioning means for drawing said clamping hub and clamping ring against said disk to axially compress said stack, the interaction of said angled upper surface of said clamping ring and said peripheral surface of said hub being such that dishing of the endmost disk is substantially eliminated.

4,065,800
TAPE CASSETTE PLAYER
James R. Wilson, Kokomo, and Jerry P. Wise, Peru, both of Ind., assignors to General Motors Corporation, Detroit, Mich.
Filed Mar. 16, 1977, Ser. No. 777,964
Int. Cl.² G11B *15/24*
U.S. Cl. 360—137 **4 Claims**

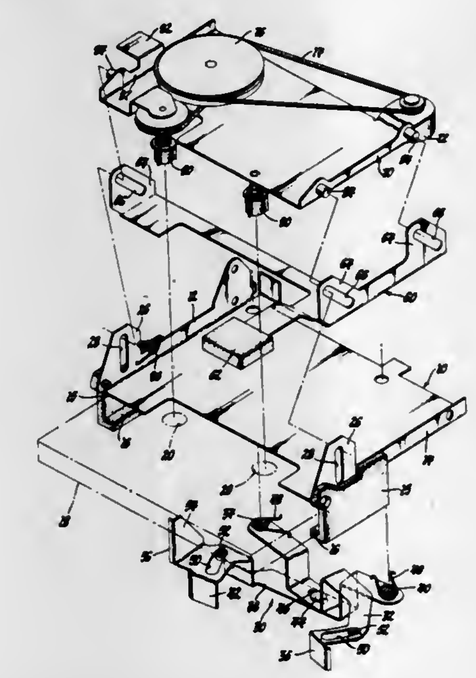

1. A tape cassette player comprising, a base member having guide means defining a chamber having an axis for slidably receiving a tape cassette movable along the axis, a tape transport assembly including tape drive means, means supporting said tape transport assembly for movement perpendicular to the said axis between a tape drive position wherein said tape drive means projects into said chamber for driving engagement with said tape cassette and an inoperative position spaced from said tape cassette, spring means for biasing said tape transport assembly to said tape driving position, a manually operable eject slide supported for movement by said base member, said eject slide being operatively connected to move said tape transport assembly from said tape driving position to said inoperative position against the force of said spring means, a lever assembly comprising a pair of levers pivotally supported by said base member, the levers including cassette engaging contact elements disposed in said chamber, and coupling means interconnecting the levers to maintain the contact elements in a plane perpendicular to the said axis, resilient means connected to the lever assembly for urging said levers and said contact elements toward a first state in engagement with said cassette when said cassette is partially inserted into said chamber, said levers and contact elements being moved by engagement with said cassette against the force of the resilient means to a second state upon the complete insertion of said cassette into said chamber, abutment means carried by said lever assembly and engageable with said tape transport assembly for holding the tape transport assembly in said inoperative position when said levers are in said first state, said abutment means being disengaged from said tape transport assembly when said levers are moved to said second state whereby the tape transport assembly is moved to the said tape driving position by said spring means when a cassette is completely inserted into the chamber, and means on the tape transport assembly operative in the tape driving position for maintaining the levers in the second state, the lever assembly being released to move the said levers to the said fist state by the force of the resilient means when the tape transport assembly is moved to said inoperative position by operation of the eject slide whereby the cassette is forcibly ejected from said chamber.

4,065,801
KIT FOR CLEANING TAPE CARTRIDGE PLAYBACK UNIT
Raymond C. Leaming, 721 S. Washington, Liberal, Kans. 67901
Filed Aug. 29, 1975, Ser. No. 609,009
Int. Cl.² G11B *5/41*
U.S. Cl. 360—137 **10 Claims**

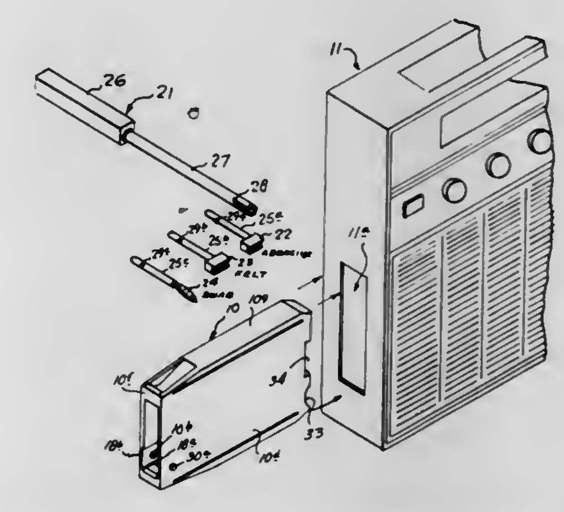

1. A kit for cleaning the components of a cartridge tape playback unit having a rotating drive capstan and an opening for receiving a cartridge enclosed tape, comprising:

a. a hollow cartridge case having side walls and a substantially completely open front end for providing unobstructed viewing of said components, to determine whether or not any of said components require cleaning, when said cartridge is inserted in said cartridge receiving opening;

b. separate, non-affixed tool holder means for mounting at least one cleaning head for cleaning at least one of said components when said viewing determines that cleaning is required; and

c. access means in the rear end of said cartridge for permitting said tool to pass through said cartridge from said open front end and selectively engage said at least one of said components.

4,065,802
INVERTER CIRCUIT FOR INDUCTION HEATING COOKING OVENS WITH A PROTECTION DEVICE
Takumi Mizukawa, Neyagawa; Masatatsu Nakamura, Higashimikunimachi; Kouzi Funakoshi, Osaka, and Hideyuki Kominami, Takatsuki, all of Japan, assignors to Matsushita Electric Industrial Co., Ltd., Kadoma, Japan
Filed Feb. 27, 1976, Ser. No. 661,991
Claims priority, application Japan, Mar. 7, 1975, 50-28530
Int. Cl.² H02H *7/122*
U.S. Cl. 361—18 **6 Claims**

1. An inverter circuit for energizing an induction heating cooking oven from a power supply having a circuit breaker connected thereto comprising

a heating coil for generating an A.C. magnetic field;

a thyristor inverter coupled to said power supply for supplying A.C. power to said heating coil;

control means for controlling said thyristor inverter; and

protection means for said thyristor inverter connected to said control means including,

thyristor conduction period detection means for detecting that the conduction period of said thyristor inverter exceeds a predetermined time period and for generating a signal to be applied to said control means thereby stopping operation of said thyristor inverter without actuating said circuit breaker, and

voltage detection means for detecting that the voltage applied to said thyristor inverter differs from a predeter-

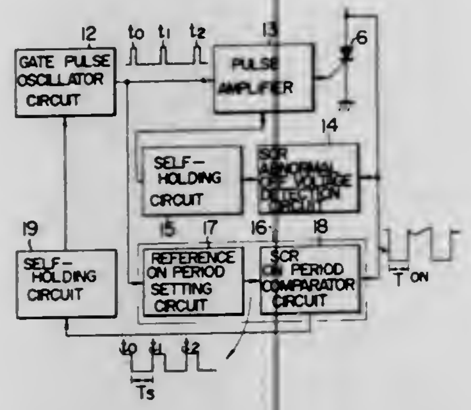

mined magnitude and for providing a signal to said control means.

4,065,803
ELECTRONIC DEVICE FOR PREVENTING UNDESIRABLE EFFECT RESULTING FROM VOLTAGE FLUCTUATION

Hiroyuki Mikada, Kawasaki, and Jyuji Kishimoto, Tokyo, both of Japan, assignors to Canon Kabushiki Kaisha, Tokyo, Japan
Filed Dec. 8, 1975, Ser. No. 638,802
Int. Cl.² H02H *3/24*
U.S. Cl. 361—88 **6 Claims**

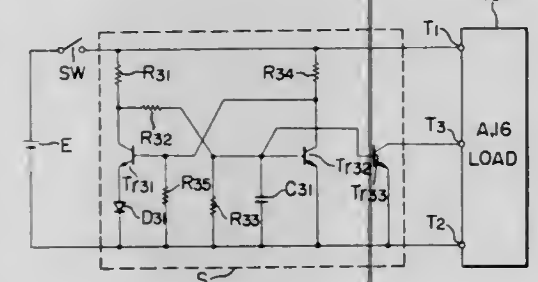

1. An electronic device comprising:
detection means for coupling to a first voltage source to determine when a voltage applied from the source is outside of a predetermined range and for producing a corresponding detection signal;
means coupled to said detection means for producing a cutoff signal in response to the detection signal from said detection means;
voltage conversion means for coupling to the voltage source for supplying a second voltage for use in said device; and
disable means coupled to said cutoff signal means and said voltage conversion means for disabling said conversion means in response to the occurrence of said signal, wherein said disable means has a hysteresis characteristic such that said voltage conversion means is enabled when the voltage applied to said device is greater than a selected value, and said conversion means is disabled when the source voltage decreases a predetermined amount below said selected value.

4,065,804
ELECTRONIC CONTROL SYSTEM FOR MOTORS AND THE LIKE

Rolf A. Rostad, 330 College Ave., Angwin, Calif. 94508
Division of Ser. No. 492,491, July 29, 1974, abandoned, and a continuation of Ser. No. 357,863, May 7, 1973, abandoned. This application May 21, 1975, Ser. No. 579,526
Int. Cl.² H02H *3/10*
U.S. Cl. 361—96 **3 Claims**

1. A multi-level trip circuit for electrical loads having high unit current demands when they are connected to an electrical source for applying energy thereto comprising:
electrical connection means for connecting a load to an electrical source, said electrical connection means including a controllable switch means for connecting and disconnecting said load to said electrical source;
current sensing means associated with said electrical connection means operable to develop an electrical signal proportional to the instantaneous current passing through said electrical connection means;
circuit means connected to receive said signal for said sensing means, said circuit means having at least a first resistance and a second resistance connected in series, arranged so said electrical signal passes serially therethrough;
switching means connected across one of said first and sec-

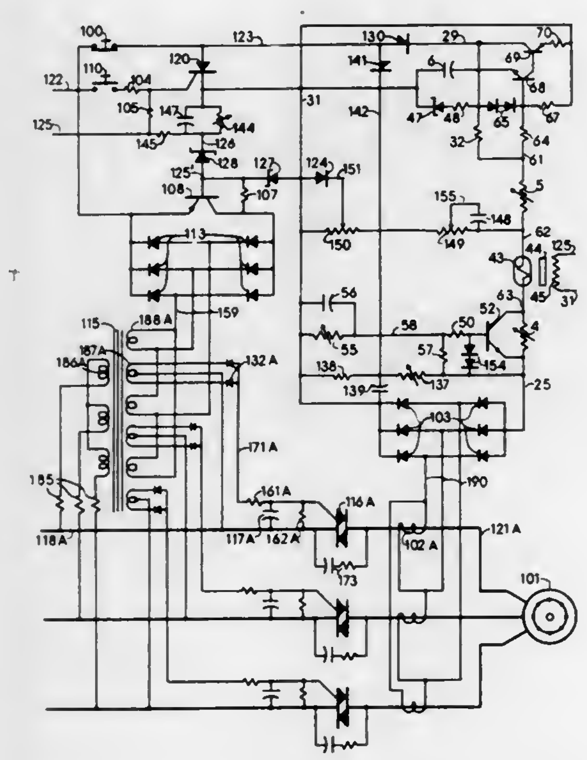

ond resistances operable to bypass one of said resistances when said switching means electrically conducts;
a timing circuit connected to receive said electrical signal and connected to said switching means being operable to activate said switching means to bypass the resistance across which it is connected at a preselected time interval based on the level of said electrical signal; and
a control means connected to the output of said circuit means and to said controllable switch means operable to cause said switch means to dissconnect said load from said electrical source when said electrical signal exceeds predetermined levels whereby a higher initial current can be drawn by said load for a preselected time interval without causing said switch means to disconnect the load and thereafter a lower current level will cause the switch means to disconnect the load after the preselected time interval has been exceeded.

4,065,805
CIRCUIT ARRANGEMENT IN AN ELECTRICAL DEVICE OPERATED WITH DIRECT-CURRENT, ESPECIALLY IN A TIMING RELAY

Heinz Unterweger, Aarau, and Maurice Grémaud, Buchs, both of Switzerland, assignors to Sprecher & Schuh AG, Aarau, Switzerland
Filed Apr. 12, 1976, Ser. No. 675,942
Claims priority, application Switzerland, Apr. 16, 1975, 4873/75
Int. Cl.² H01H *47/18*
U.S. Cl. 361—196 **8 Claims**

1. A circuit arrangement in an electrical device containing a load which can be supplied with a direct-current voltage of lesser quality and electronic components which can be sup-

plied with a direct-current voltage of greater quality, especially in a timing relay, for supplying the device with energy from an alternating-current network by means of voltage transforming means which can be connected with the alternating-current network and a rectifier arrangement connected in circuit thereafter, the improvement comprising: the rectifier arrangement having an output, a first supply branch connected in circuit with said output, a second supply branch connected in circuit with said output, said second supply branch including smoothing means and voltage stabilizer means, reverse current-blocking means for connecting said second supply branch with said output, the load which is to be supplied with the direct-current voltage of lesser quality being connected with the first supply branch and the electronic compo-

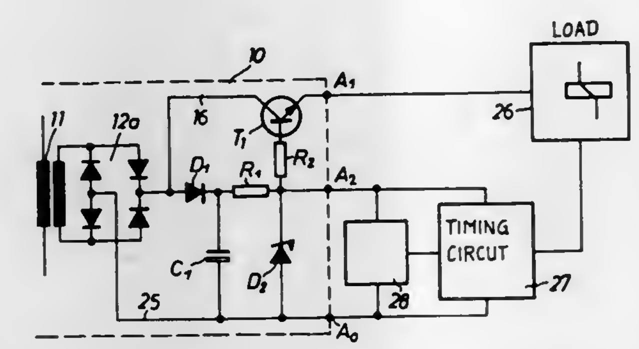

nents which are to be supplied with the direct-current voltage of greater quality being connected with the second supply branch, voltage limiter means for maintaining the voltage peak in the first supply branch less than the amplitude of the rectified voltage delivered by the rectifier arrangement, the load supplied with the direct-current voltage of lesser quality including a relay having a winding connected with the first supply branch, the electronic components to be supplied with the direct-current voltage of greater quality comprising a timing circuit, bistable flip-flop stage provided for the timing circuit, circuit means for determining the starting conditions for the bistable flip-flop stage, said timing circuit with the bistable flip-flop stage and said circuit means being connected in circuit with the second supply branch.

4,065,806
SEARCHLIGHT OR THE LIKE

Taiji Satoh, Koshigaya, Japan, assignor to Sanshin Dengu Manufacturing Co., Ltd., Japan
Continuation of Ser. No. 534,183, Dec. 19, 1974, abandoned. This application Aug. 27, 1976, Ser. No. 718,221
Claims priority, application Japan, June 28, 1974, 49-73264
Int. Cl.² F21M *3/18;* **F21S** *1/02*
U.S. Cl. 362—419 **2 Claims**

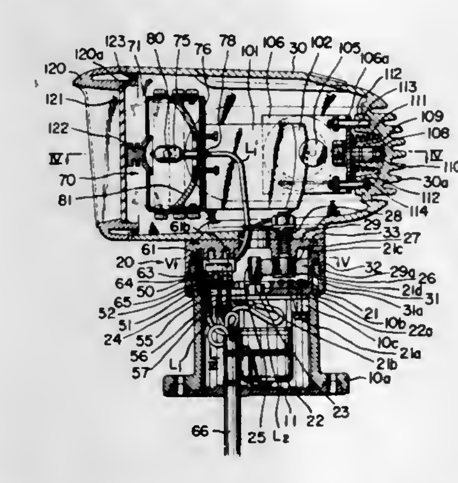

1. A searchlight comprising a base; a planetary rotation means mounted water-tightly on said base; and a housing mounted water-tightly on said planetary rotation means for horizontal rotation and having only at the front end an opening tightly closed by a front glass; said planetary rotation means including a motor accommodated within said base, a drive sun wheel firmly mounted on a shaft of said motor, a stationary planet ring fixedly secured to said base concentrically with said drive sun wheel, and at least one planetary wheel which is rotatably mounted on a stationary shaft secured to said housing and which is arranged between the drive sun wheel and the stationary planet ring in pressuring engagement therewith; said housing having therein a support frame of sheet metal pivotally supported on the inner wall thereof in a position adjacent the front glass for upward and downward tilting movement, said support frame carrying at least one lamp and reflector and having pivots lying on a horizontal axis passing through a focal point of said at least one reflector, and said housing also having therein a means for tilting said support frame upwardly and downwardly, said tilting means including a vertically pivotal elevation plate fixedly secured to the support frame and defining at its outer peripheral edge a circular arc centering around the pivots of said support frame, and a drive pulley firmly mounted on a shaft of a motor and adapted to be normally pressed against the outer peripheral edge of said elevation plate by means of spring force.

4,065,807
DC-TO-DC VOLTAGE CONVERTER EMPLOYING A COMMON TRANSISTOR IN BOTH SWITCHING AND MULTIVIBRATOR FUNCTIONS

Neale A. Zellmer, Belmont, Calif., assignor to GTE Automatic Electric Laboratories Incorporated, Northlake, Ill.
Filed Feb. 7, 1977, Ser. No. 766,173
Int. Cl.² H02M *3/155*
U.S. Cl. 363—16 **8 Claims**

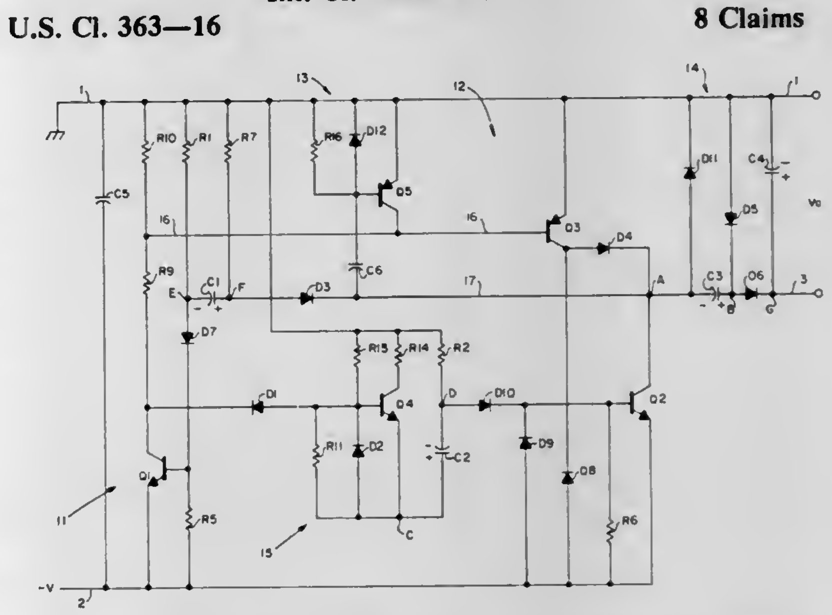

1. An inductorless dc-to-dc voltage converter for converting a dc input voltage of one polarity to a dc output voltage of the opposite polarity comprising:
an input port having a pair of terminals to which the dc input voltage of one polarity is to be applied;
an output port having a pair of terminals across which the dc output voltage of the opposite polarity is to be produced;
first means electrically connecting one terminals of said input and output ports together;
second means which is a regenerative switching means comprising first and second transistors which are free running and operating 180° out-of-phase;
third means which is a current switching means comprising said second transistor of said second (regenerative switching) means, a third transistor, and fourth means for electrically connecting the primary conduction paths of said third transistor and the common-second transistor in series across said input port, said second and third transistors also operating 180° out-of-phase with each other, being of opposite conductivity types, and have their emitter-collector junctions electrically connected in series across said input port; said third transistor being responsive to and controlled by the operation of said first transistor;
a first capacitor electrically connected across said output port;
a second capacitor;

a first diode;
fifth means electrically connecting said first diode and second capacitor in series in that order between the other output terminal and a common electrical connection point of said second and third transistors;
a second diode electrically connected between said one output terminal and the junction of said second capacitor and said first diode;
said first and second diodes being poled for only said second diode conducting through said second capacitor and said second transistor for charging said second capacitor in one direction during conduction of said second transistor; said first diode being cut off during this time interval of conduction of said second transistor for preventing said first capacitor discharging through the converter circuitry; and being poled for only said first diode conducting through said first capacitor, said third transistor, and said second capacitor for charging the latter during conduction of said third transistor for producing a relatively constant output voltage across said output port of the opposite polarity;
said fourth (connecting) means comprising a third diode in the electrical connection between said second and third transistors and also in the electrical connection between said second capacitor and said third transistor, said third diode being poled for isolating the emitter-collector junction of said third transistor from a pulse voltage of one polarity at the said second capacitor during nonconduction of said third transistor.

4,065,808
NETWORK COMPUTER SYSTEM

Hermann Schomberg, Tangstedt, and Frank Heubach, Hamburg, both of Germany, assignors to U.S. Philips Corporation, New York, N.Y.
Filed Jan. 15, 1976, Ser. No. 649,556
Claims priority, application Germany, Jan. 25, 1975, 2503087; June 16, 1975, 2526811
Int. Cl.[2] G06F *7/38*
U.S. Cl. 364—200 **3 Claims**

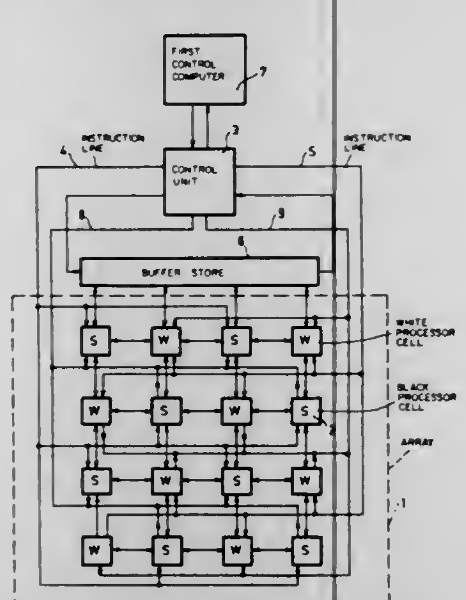

1. A multiprocessor computer system comprising:
a control computer and a control unit connected thereto;
first and second groups of identical processors arranged in a matrix array, each of said processors of one group lying directly adjacent to at least two of said processors of the other group and connected to said adjacent processors by means of data exchange lines; each group of said processors being separately connected to said control unit by instruction lines and signalling lines for transmitting non-corresponding instructions from said control computer to each group of processors; and
a buffer store connected to said control unit by data lines and connected to at least some of said processors for storing information for processing by said at least some of said processors.

4,065,809
MULTI-PROCESSING SYSTEM FOR CONTROLLING MICROCOMPUTERS AND MEMORIES

Mitsuo Matsumoto, Kokubunji, Japan, assignor to Tokyo Shibaura Electric Co., Ltd., Kawasaki, Japan
Filed May 27, 1976, Ser. No. 690,603
Int. Cl.[2] G06F *15/16, 13/00*
U.S. Cl. 364—200 **4 Claims**

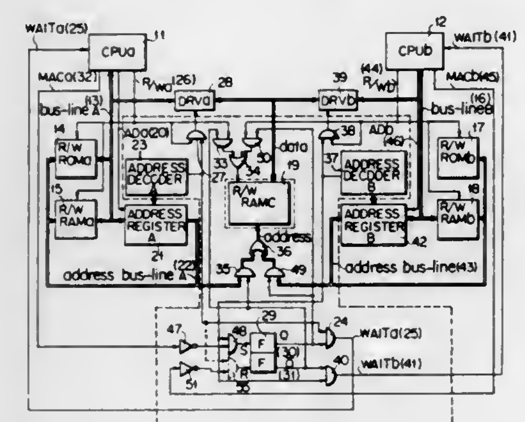

1. A multi-processing system for controlling microcomputers and memories comprising
a plurality of microcomputers each provided with an exclusive memory which is put into access with a corresponding microcomputer whenever the microcomputer designates an address within a first range;
a plurality of common memories each connected to two of the microcomputers and put into access with either of the two microcomputers whenever either microcomputer designates an address within a second range;
a plurality of detector means, each including an address decoder to detect that the corresponding microcomputer designates an address within said second range, provided at every microcomputer for detecting whether or not the microcomputer designates the address of a corresponding common memory according to address data from the microcomputer; and
a plurality of control means each for controlling the access between every two microcomputers and the corresponding common memory based on detection outputs of corresponding detector means so that one of the two microcomputers is prohibited from being put into access even if designating the address of the common memory while the other microcomputer is in access with the common memory and is put into access with the common memory upon completion of a memory access cycle of the other microcomputer whereby every two microcomputers are separately put in access with their exclusive memories, respectively, if no data exchange is made between them through the corresponding common memory.

4,065,810
DATA TRANSFER SYSTEM

Clark Evans Cramer, Raleigh, N.C.; John Richard Gaetjen, Saugerties; Carl Henry Grant, Woodstock, both of N.Y.; Paul Eugene Nelson, and Frank Allen Newlin, III, both of Cary, N.C., assignors to International Business Machines Corporation, Armonk, N.Y.
Filed Jan. 26, 1977, Ser. No. 762,686
Int. Cl.[2] G06F *3/00*
U.S. Cl. 364—200 **2 Claims**

1. An output channel system for transferring data blocks and control information stored in several different locations in a memory connected to a data processor to a device comprising:
at least two pointer registers in the data processor, a first of

which includes the address in memory of the first control information,
a control channel interconncting the pointer registers and the device,
a data channel interconnecting the memory and the device,
first means connected to the device for accessing the address stored in the first pointer register to cause the memory contents of that addressed location to be transmitted over the data channel to the device, the control information including:
the first address in memory containing data to be transmitted,
a count field indicating the number of consecutive addresses in memory having data to be transmitted and control bits indicating the status of the data contained in the consecutive addresses in memory; and

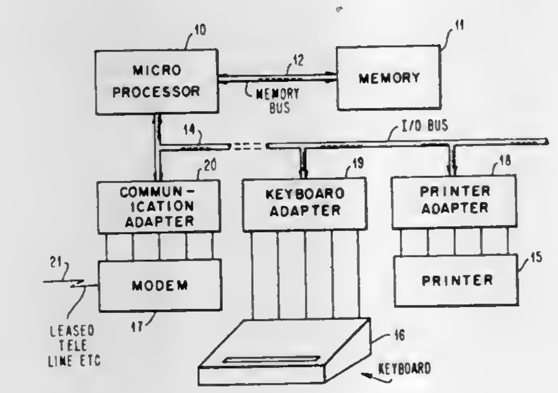

means for incrementing said first address in the first pointer register,
second means connected to the device for transferring the received first address to the second pointer register which includes means for initiating a write operation in the memory at the transferred address to cause the data stored at said first address to be transferred to the device via the data channel and means for incrementing the address inserted in the second pointer register after said data transfer and means for decrementing the count stored in the device after said data transfer, means for repeating the data trasfer sequence until the number stored in the count field is reduced to zero and means for thereafter repeating the entire sequence set forth above until all the control bits have been received, so as to indicate that all data has been transferred to the device.

4,065,811
DOMESTIC APPLIANCE FOR CONDITIONG FOOD SUCH AS SALADS

Bernard Pauty, Daix-Fontaine-les-Dijon, France, assignor to Seb S.A., Selongey, France
Filed Nov. 2, 1976, Ser. No. 738,178
Claims priority, application France, Nov. 25, 1975, 75.35953
Int. Cl.[2] B01F *7/30*
U.S. Cl. 366—244 **21 Claims**

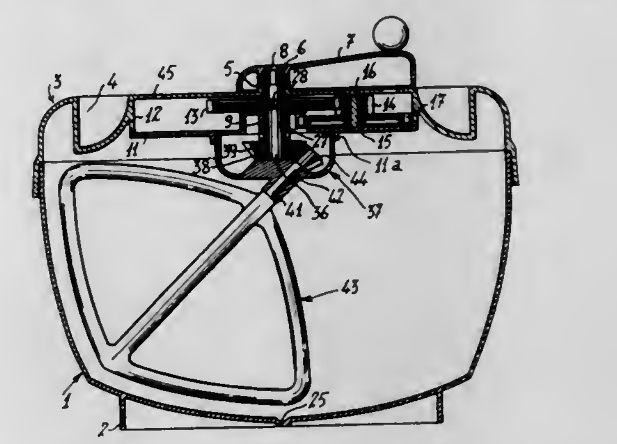

1. A domestic appliance for conditioning food and especially food in the form of leaves such as salads, comprising a container fitted with a lid for carrying an actuating hand-crank on which is keyed a toothed ring, wherein said appliance comprises in combination a spin-drying unit composed of a removable drying basket driven in rotation by a lid-plate, complementary pivotal means being provided respectively at the center of the basket and at the center of the container, and a mixing unit which is at least partially removable, and wherein said appliance comprises means for providing a mechanical coupling between said units and the hand-crank, said coupling means comprising a countershaft having two pinions for driving either one of said two units, the mixing unit comprises a whisk mounted for rotation about its axis and carried by a whisk support which is in turn rotatably mounted on the lid of the appliance, said mechanical coupling means comprising a pinion keyed coaxially with the whisk and so arranged as to cooperate in planetary motion with a bevel pinion which is substantially coaxial with the appliance and fixed rotationally with respect to the lid in order to ensure both rotational motion of the whisk about its axis and rotational motion of said axis along a conical path, the hand-crank being located off-center with respect to the axis of the appliance, said hand-crank having a second toothed ring having a diameter which is different from the first, said toothed rings being so arranged as to engage with the pinions of the countershaft, said countershaft being substantially coaxial with the appliance, and the bevel pinion being permanently fixed on the lid of the appliance at least during normal operation.

DESIGNS

DECEMBER 27, 1977

246,746
ROBE AND HOOD ENSEMBLE
Margaret L. Dyer, 2873 Amulet St., San Diego, Calif. 92123
Filed Dec. 24, 1975, Ser. No. 644,302
Term of patent 14 years
Int. Cl. D2—*02*
U.S. Cl. D2—181

246,747
PARTS CLEANING BRUSH
Larry A. Brandt, Horace, N. Dak. 58047, and Bruce R. Johnson, Box 12, Hickson, N. Dak. 58044
Filed Feb. 23, 1976, Ser. No. 660,240
Term of patent 14 years
Int. Cl. D4—*01*
U.S. Cl. D4—02

246,748
HOLDER FOR A TELEPHONE DIRECTORY
John R. Tricario, 312 Riva Ave., Milltown, N.J. 08850
Filed July 27, 1976, Ser. No. 708,709
Term of patent 14 years
Int. Cl. D6—*04*
U.S. Cl. D6—131

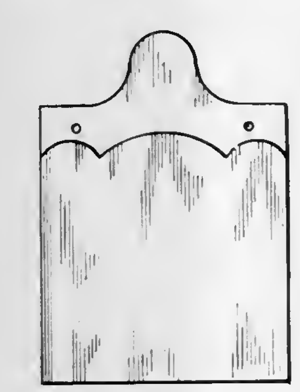

246,749
OVAL BOWL
Arthur L. Harshman, Dunkirk, Ind., and James I. Messmer, Detroit, Mich., assignors to Florists' Transworld Delivery Association
Filed May 17, 1976, Ser. No. 687,189
Term of patent 14 years
Int. Cl. D7—*01*; D11—*02*
U.S. Cl. D7—1

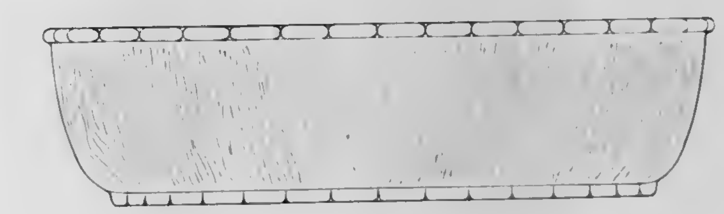

246,750
ROUND BOWL
Arthur L. Harshman, Dunkirk, Ind., and James I. Messmer, Detroit, Mich., assignors to Florists' Transworld Delivery Association
Filed May 17, 1976, Ser. No. 687,190
Term of patent 14 years
Int. Cl. D7—*01*
U.S. Cl. D7—28

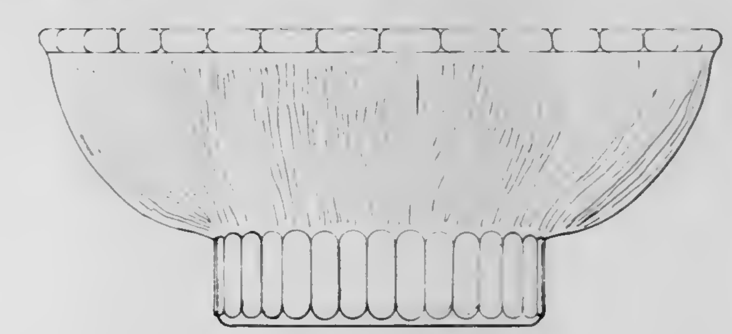

246,751
DRAIN TRAY FOR A FOOD SERVICE PAN
Ronald C. Yonkers, Winchester, Va., assignor to Rubbermaid Commercial Products Inc., Winchester, Va.
Filed Mar. 15, 1976, Ser. No. 666,949
Term of patent 14 years
Int. Cl. D7—*05*
U.S. Cl. D7—129

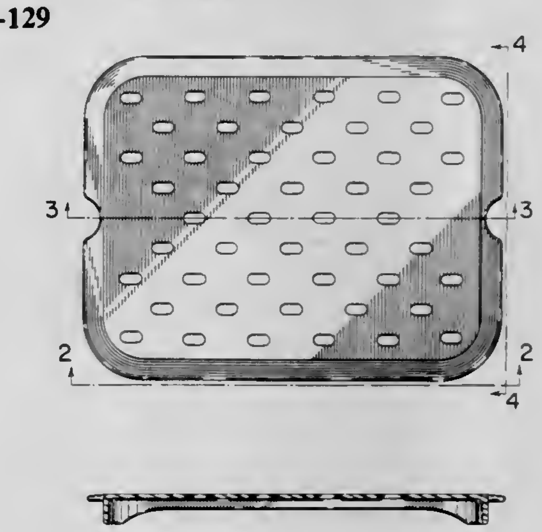

246,752
VACUUM CLEANER
Kiyoshi Fukuda, Fukuoka, and Daisuke Kajiwara, Ohnojo, both of Japan, assignors to Matsushita Electric Industrial Co., Ltd., Kadoma, Japan
Filed July 19, 1976, Ser. No. 706,407
Term of patent 14 years
Int. Cl. D7—*05*; D15—*05*
U.S. Cl. D7—164

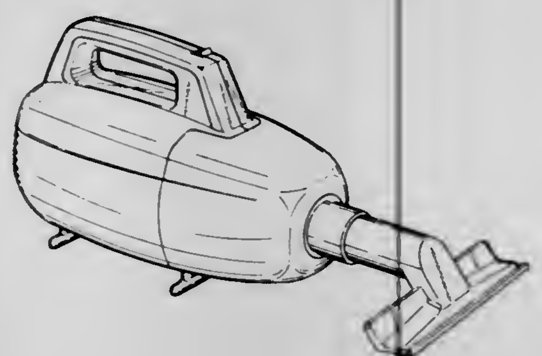

246,753
CHEWED GUM DISPOSAL RECEPTACLE
Charmaine A. Jenkins, P.O. Box 635, Burlington, Vt. 05401
Filed Oct. 6, 1975, Ser. No. 619,678
Term of patent 14 years
Int. Cl. D7—*07*
U.S. Cl. D7—191

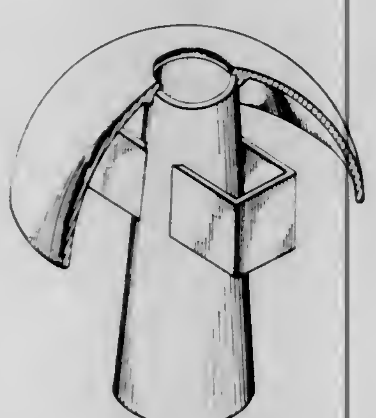

246,754
RUBBISH RECEPTACLE
Lawrence Klosk, 3977 Sedgwick Ave., Bronx, N.Y. 10463
Filed June 21, 1976, Ser. No. 698,208
Term of patent 14 years
Int. Cl. D7—*05*
U.S. Cl. D7—194

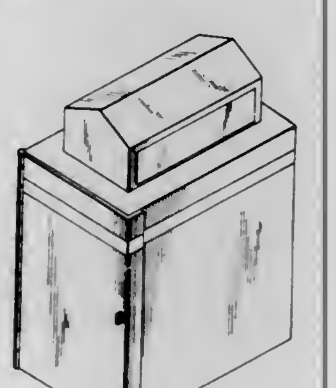

246,755
ICE HAMMER
James R. Root, 3412 Norton, Independence, Mo. 64052
Filed Apr. 26, 1976, Ser. No. 680,526
Term of patent 14 years
Int. Cl. D8—*02*
U.S. Cl. D8—77

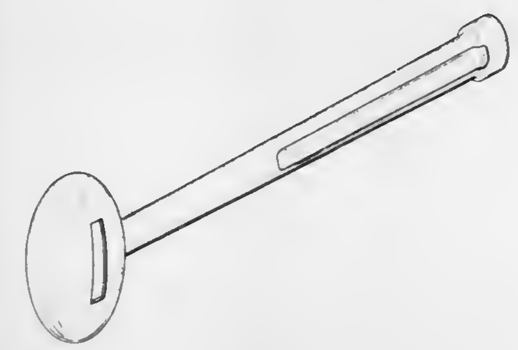

246,756
SAW SHARPENER OR THE LIKE
Norman Linfoot Smyth, and Roy George Hodgson, both of Sheffield, England, assignors to James Neill Holdings Limited, United Kingdom
Filed Sept. 17, 1976, Ser. No. 724,368
Claims priority, application United Kingdom, Apr. 20, 1976, 975350/76
Term of patent 14 years
Int. Cl. D8—*05*
U.S. Cl. D8—91

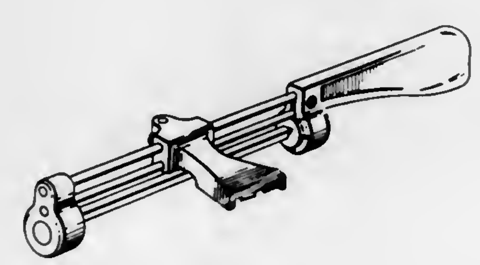

246,757
COMBINED DOOR PULL AND ESCUTCHEON
Russell W. Waldo, St. Paul, Minn., assignor to Ideal Security Hardware Corporation, St. Paul, Minn.
Filed July 28, 1976, Ser. No. 709,434
Term of patent 14 years
Int. Cl. D8—*06*
U.S. Cl. D8—301

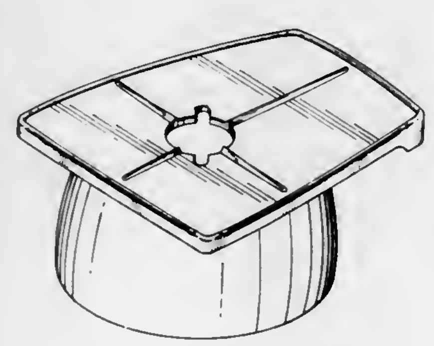

246,758
HANDLE GRIP FOR VEHICLE
Kiyoshi Ukai, Niiza, Japan, assignor to Honda Giken Kogyo Kabushiki Kaisha, Tokyo, Japan
Filed Oct. 1, 1976, Ser. No. 728,790
Claims priority, application Japan, Apr. 12, 1976, 51-13417
Term of patent 14 years
Int. Cl. D12—*11*
U.S. Cl. D8—303

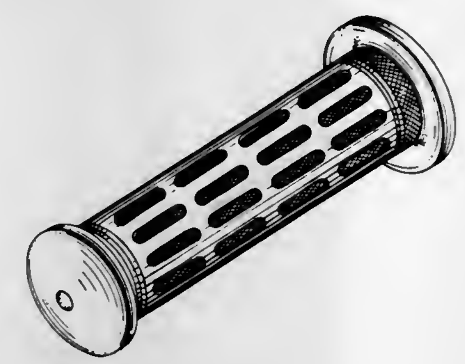

246,759
BAIL PULL
LaVerne E. Clayton, Rockford, Ill., assignor to Amerock Corporation, Rockford, Ill.
Filed Dec. 1, 1976, Ser. No. 746,608
Term of patent 14 years
Int. Cl. D8—*06*
U.S. Cl. D8—306

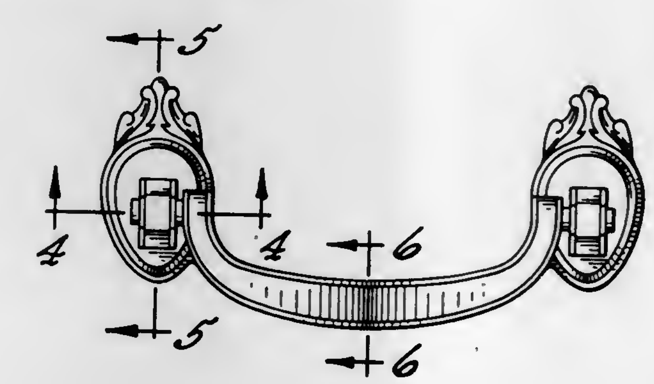

246,760
LOCKING DEVICE FOR VEHICLES
Henry Hart, 86 Manor Road, Chigwell, Essex, England
Filed May 14, 1976, Ser. No. 686,383
Term of patent 14 years
Int. Cl. D8—*07*
U.S. Cl. D8—341

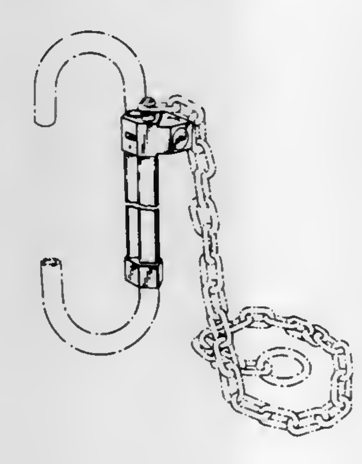

246,761
KEY BLANK
Craig B. Kelley, Cedar Grove, N.J., and David C. Cole, Bristol, Conn., assignors to Emhart Industries, Inc.
Filed June 7, 1976, Ser. No. 690,381
Term of patent 14 years
Int. Cl. D8—*07*
U.S. Cl. D8—347

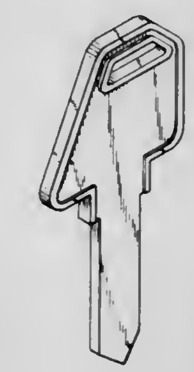

246,762
UTILITY POLE ADJUSTABLE INSULATOR BRACKET
Joseph W. Dimiceli, and Edgardo R. Labra, both of 530 S. 11th St., Richmond, Calif. 94801
Filed Apr. 5, 1976, Ser. No. 673,401
Term of patent 14 years
Int. Cl. D8—*08*
U.S. Cl. D8—364

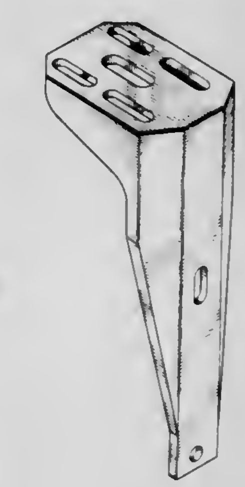

246,763
SQUEEZE BOTTLE
Warren J. Luedtke, Racine, Wis., assignor to S. C. Johnson & Son, Inc., Racine, Wis.
Filed June 11, 1976, Ser. No. 695,239
Term of patent 14 years
Int. Cl. D9—*01*
U.S. Cl. D9—2

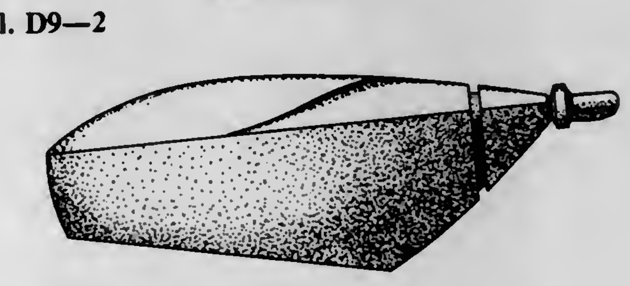

246,764
BOTTLE
John Paul Veasy, Alameda, Calif., assignor to Owens-Illinois, Inc.
Filed Dec. 18, 1975, Ser. No. 642,081
Term of patent 14 years
Int. Cl. D9—*01*
U.S. Cl. D9—137

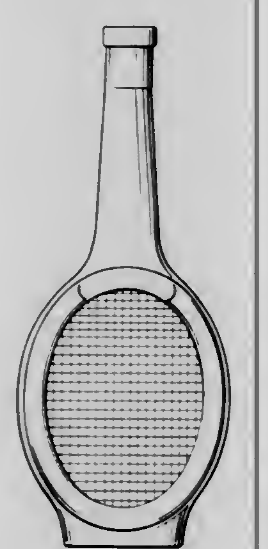

246,765
DIGITAL WRIST WATCH
Eugene Joseph Sulek, Richardson, Tex., assignor to Texas Instruments Incorporated
Continuation-in-part of Ser. No. 501,549, Aug. 29, 1974, Pat. No. D. 238,759. This application Sept. 11, 1975, Ser. No. 612,617
Term of patent 14 years
Int. Cl. D10—*02*
U.S. Cl. D10—38

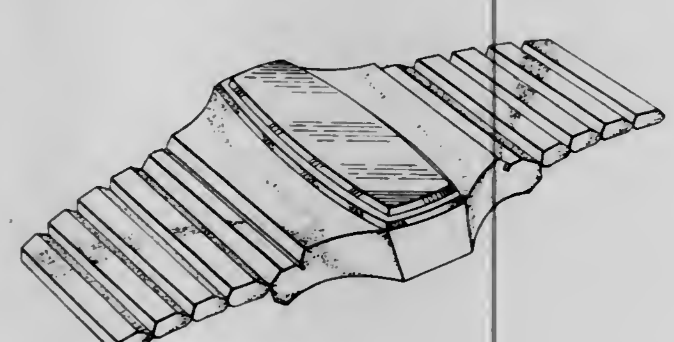

246,766
INFRARED THERMOMETER
Charles E. Everest, Santa Ana, Calif., assignor to Telatemp Corporation, Fullerton, Calif.
Filed Oct. 15, 1975, Ser. No. 622,669
Term of patent 14 years
Int. Cl. D10—*04*
U.S. Cl. D10—57

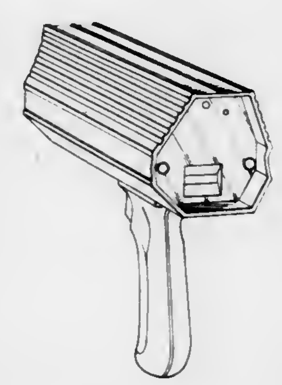

246,767
ELECTRICAL MEASURING INSTRUMENT
Robert John Needham, 34 Grosvenor Road, Chiswick, London, W. 4., England
Filed May 14, 1976, Ser. No. 686,639
Claims priority, application United Kingdom, Nov. 18, 1975, 973279/75
Term of patent 14 years
Int. Cl. D10—*04*
U.S. Cl. D10—78

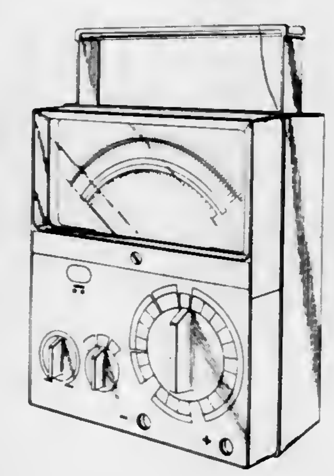

246,768
BRACELET
Pepi G. Kelman, 19264 Pacific Coast Highway, Malibu, Calif. 90265
Filed Apr. 16, 1976, Ser. No. 677,550
Term of patent 14 years
Int. Cl. D11—*01*
U.S. Cl. D11—4

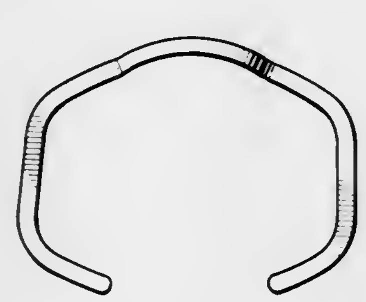

246,769
TIE CLIP
Raymond Kozak, 833 N. New St., Bethlehem, Pa. 18018
Continuation-in-part of Ser. No. 553,578, Feb. 27, 1975, abandoned. This application Oct. 21, 1976, Ser. No. 734,675
Term of patent 14 years
Int. Cl. D11—*01*
U.S. Cl. D11—48

246,770
PLAQUE
Donald R. Ditto, 4938 Sharp St., Dallas, Tex. 75247
Filed Jan. 26, 1976, Ser. No. 652,554
Term of patent 14 years
Int. Cl. D11—*02*
U.S. Cl. D11—139

246,771
FLOWER POT
Genniel Daniels, 122 Ludlow St., New York, N.Y. 10002
Filed Feb. 19, 1976, Ser. No. 659,283
Term of patent 3½ years
Int. Cl. D11—*02*
U.S. Cl. D11—143

246,772
VEHICLE
Curtis Brubaker, Los Angeles, Calif., assignor to Filmation Associates
Filed Sept. 24, 1976, Ser. No. 726,239
Term of patent 14 years
Int. Cl. D12—*14*
U.S. Cl. D12—1

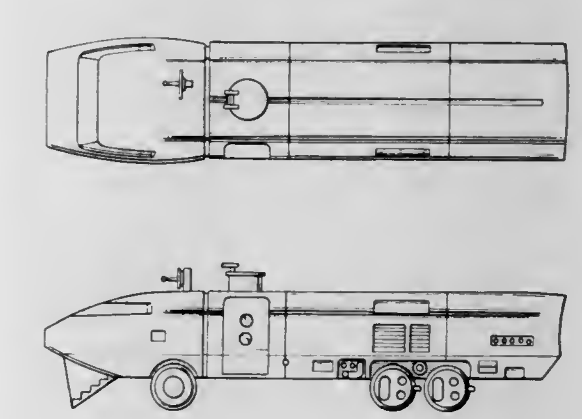

246,773
TRAY RACK
Robert F. Bladis, 2 High Point Drive, Mountainside, N.J. 07092
Filed Nov. 11, 1976, Ser. No. 741,146
Term of patent 14 years
Int. Cl. D12—*02*
U.S. Cl. D12—22

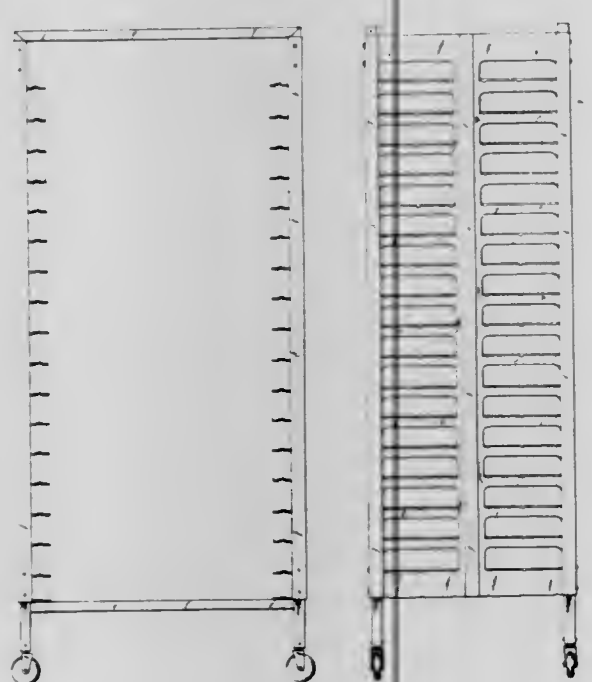

246,774
HAND TRUCK
Patsy Esposito, 350 Clarkson Ave., Brooklyn, N.Y. 11226
Filed Apr. 23, 1976, Ser. No. 679,849
Term of patent 14 years
Int. Cl. D12—*02*
U.S. Cl. D12—34

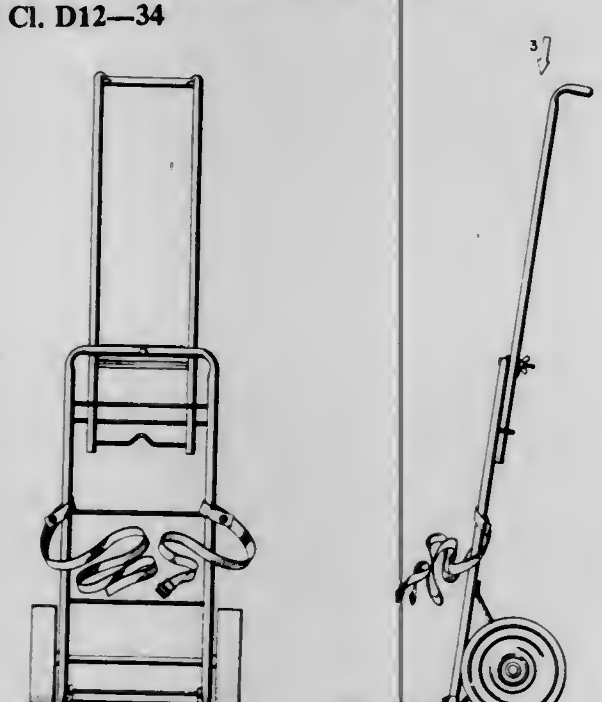

246,775
VEHICLE
Curtis Brubaker, Los Angeles, Calif., assignor to Filmation Associates
Filed Sept. 24, 1976, Ser. No. 726,240
Term of patent 14 years
Int. Cl. D12—*08*
U.S. Cl. D12—90

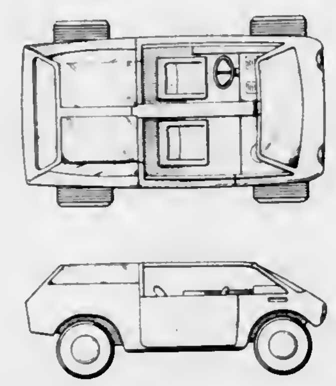

246,776
MOTORIZED TRICYCLE
Michael C. Moore, 3619 National Ave., San Diego, Calif. 92113
Filed Oct. 20, 1976, Ser. No. 734,378
Term of patent 14 years
Int. Cl. D12—*11*
U.S. Cl. D12—110

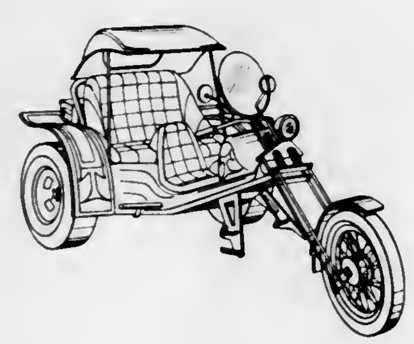

246,777
NOISEMAKER FOR BICYCLE OR THE LIKE
James T. Rutledge, 7779 Royal Lane, Dallas, Tex. 75230
Filed Jan. 9, 1976, Ser. No. 647,878
Term of patent 14 years
Int. Cl. D12—*11*
U.S. Cl. D12—114

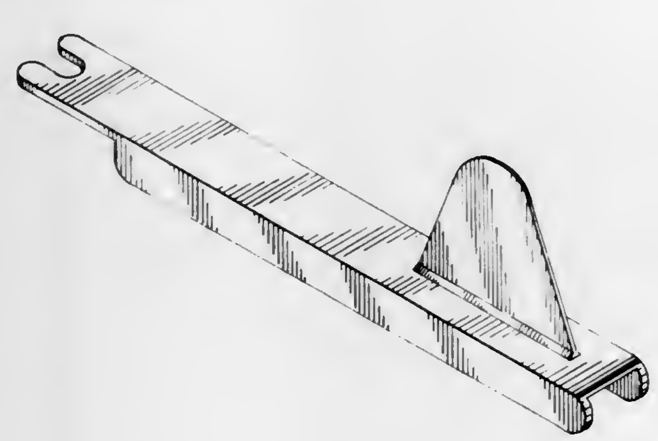

246,778
BICYCLE TANK
Larry M. Cognata, Nashville, Tenn., assignor to The Murray Ohio Manufacturing Co.
Filed May 18, 1976, Ser. No. 687,508
Term of patent 14 years
Int. Cl. D12—*11*
U.S. Cl. D12—126

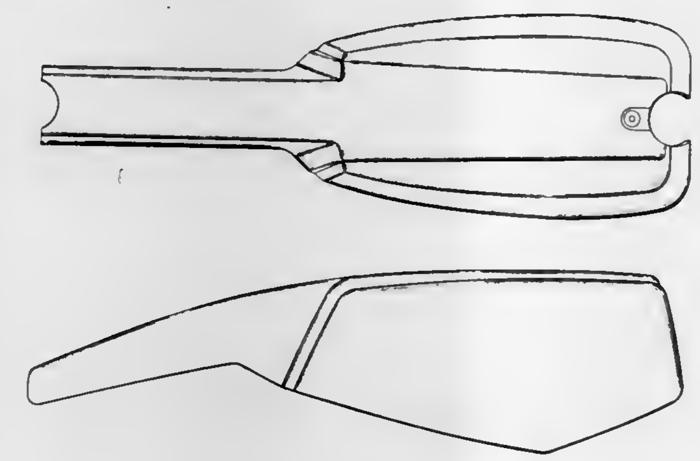

246,779
BICYCLE TANK
Larry M. Cognata, Nashville, Tenn., assignor to The Murray Ohio Manufacturing Co.
Filed July 26, 1976, Ser. No. 708,422
Term of patent 14 years
Int. Cl. D12—*11*
U.S. Cl. D12—126

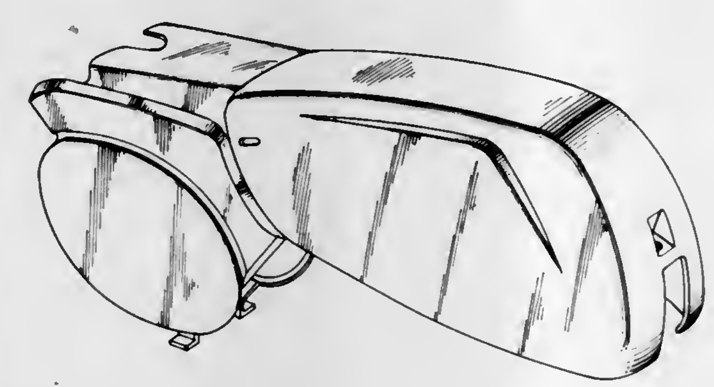

246,780
MICROPHONE/ENCODER MODULE
Richard W. Renken, Bridgman, Mich., assignor to Heath Company, Benton Harbor, Mich.
Filed Apr. 30, 1976, Ser. No. 681,879
Term of patent 14 years
Int. Cl. D14—*03, 01*
U.S. Cl. D14—12

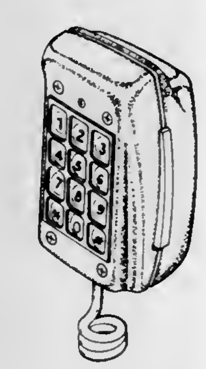

246,781
MICROPHONE OR SIMILAR ARTICLE
Rudolph William Krolopp, Palatine, Ill., assignor to Motorola, Inc., Schaumburg, Ill.
Filed June 25, 1976, Ser. No. 699,918
Term of patent 14 years
Int. Cl. D14—*01*
U.S. Cl. D14—12

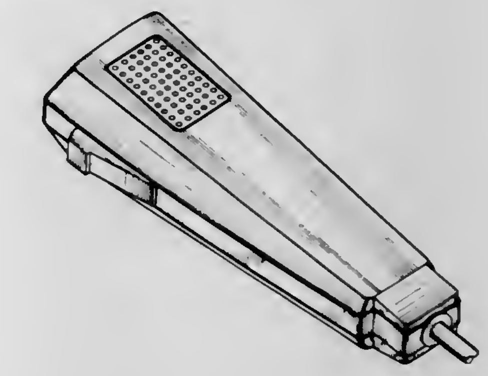

246,782
STETHOSCOPE HEADSET
Robert F. Saiya, N. Babylon, N.Y., assignor to Instrument Systems Corporation, Huntington, N.Y.
Filed Dec. 20, 1976, Ser. No. 752,358
Term of patent 14 years
Int. Cl. D14—*03*
U.S. Cl. D14—36

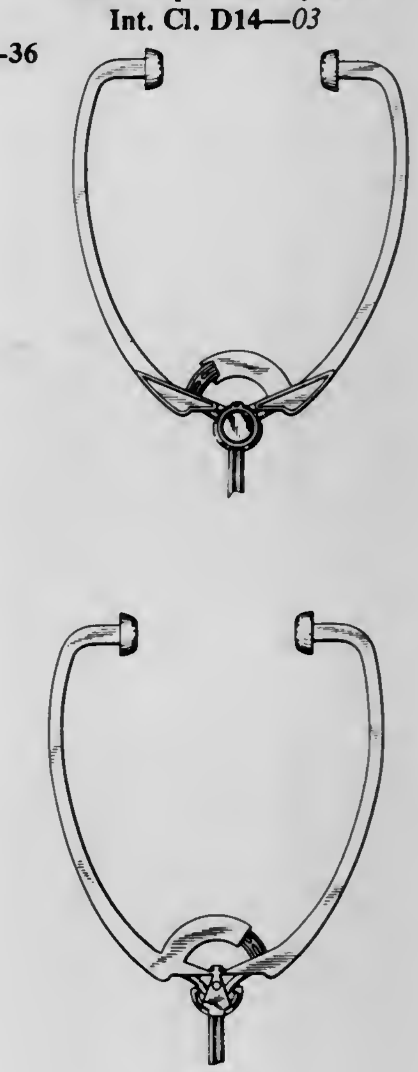

246,783
DATA-COLLECTION APPARATUS
Tommy R. Hardy, Boca Raton, Fla., and Collan B. Kneale, Rochester, Minn., assignors to International Business Machines Corporation, Armonk, N.Y.
Filed Jan. 12, 1976, Ser. No. 648,087
Term of patent 14 years
Int. Cl. D14—*02*
U.S. Cl. D14—40

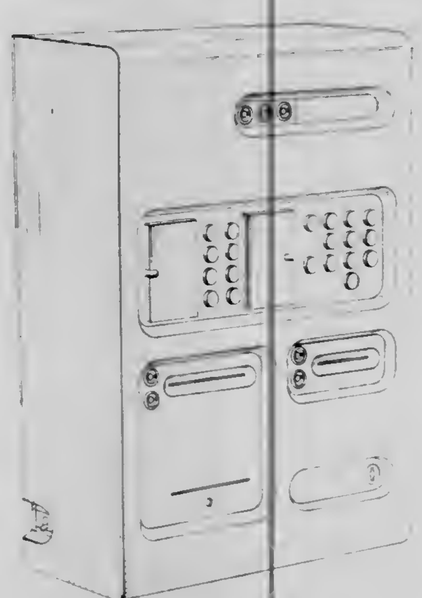

246,784
TELEPHONE SET
Hisao Fukushima; Katsuhito Watanabe, and Tsutomu Watanabe, all of Tokyo, Japan, assignors to Oki Electric Industry Co., Ltd., Tokyo, Japan
Filed Oct. 26, 1976, Ser. No. 735,636
Claims priority, application Japan, June 7, 1976, 51-21072
Term of patent 14 years
Int. Cl. D14—*03*
U.S. Cl. D14—53

246,785
WINDER FOR SYNTHETIC FILAMENT YARNS
Isamu Abe, and Takami Sugioka, both of Matsuyama, Japan, assignors to Teijin Limited and Teijin Seiki Co., Ltd., both of Osaka, Japan
Filed Mar. 17, 1976, Ser. No. 667,680
Claims priority, application Japan, Sept. 27, 1975, 50-39154
Term of patent 14 years
Int. Cl. D15—*06*
U.S. Cl. D15—66

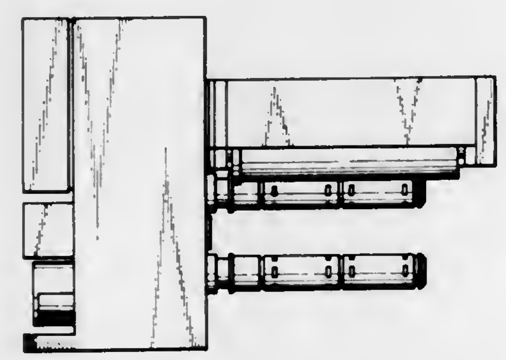

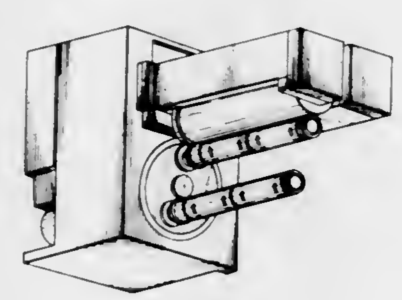

246,786
MOTION PICTURE CAMERA
Kurt Bode, Braunschweig, and Jochen Kramer, Wolfsburg, both of Germany, assignors to Rollei-Werke Franke & Heidecke, Germany
Division of Ser. No. 614,832, Sept. 19, 1975, Pat. No. Des. 242,617, which is a continuation-in-part of Ser. No. 455,868, March 28, 1974, abandoned. This application Dec. 29, 1975, Ser. No. 644,511
Claims priority, application Germany, Oct. 1, 1973, 1015; Mar. 25, 1975, 1052
Term of patent 14 years
Int. Cl. D16—*01*
U.S. Cl. D16—4

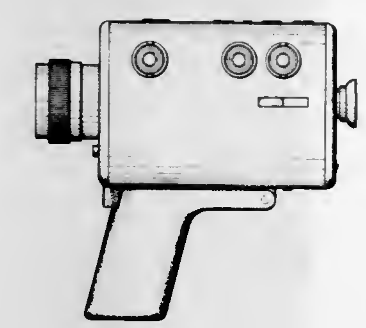

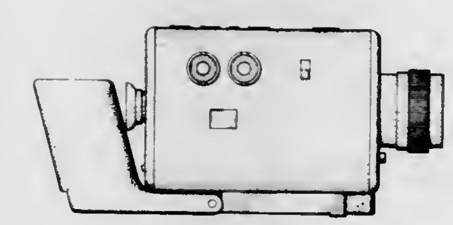

246,787
MOTION PICTURE CAMERA
Kurt Bode, Braunschweig, and Jochen Kramer, Wolfsburg, both of Germany, assignors to Rollei-Werke Franke & Heidecke, Germany
Division of Ser. No. 614,832, Sept. 19, 1975, Pat. No. Des. 242,617, which is a continuation-in-part of Ser. No. 455,868, March 28, 1974, abandoned. This application Dec. 29, 1975, Ser. No. 644,512
Claims priority, application Germany, Oct. 1, 1973, 1015; Mar. 25, 1975, 1052
Term of patent 14 years
Int. Cl. D16—*01*
U.S. Cl. D16—04

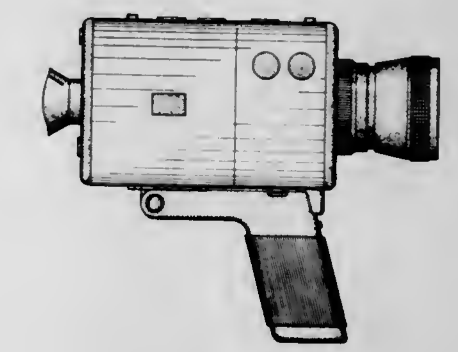

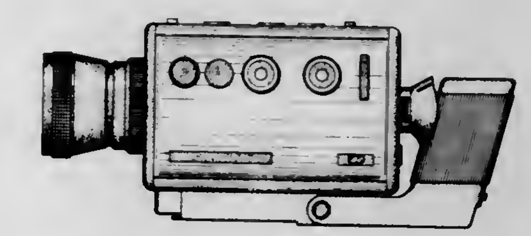

246,788
STEREOSCOPIC VIEWER
Robert M. Simonelli, Palatine, Ill.; Paul D. Miller, New York, and V. Lorenzo Porcelli, Ossining, both of N.Y., assignors to GAF Corporation, New York, N.Y.
Filed Nov. 13, 1975, Ser. No. 631,631
Term of patent 14 years
Int. Cl. D16—*06*
U.S. Cl. D16—12

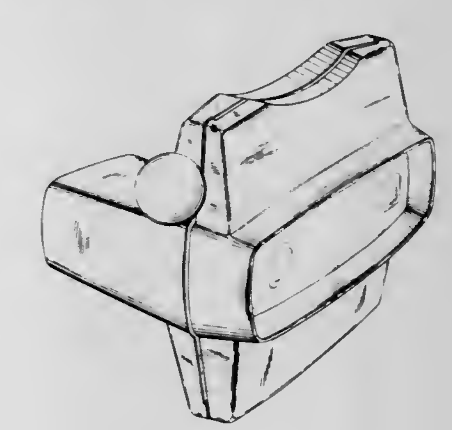

246,789
PAIR OF SPECTACLES
Vitalino Marchi, Concord, Mass., assignor to Foster Grant Co., Inc., Leominster, Mass.
Filed Feb. 2, 1977, Ser. No. 766,119
Term of patent 14 years
Int. Cl. D16—*06*
U.S. Cl. D16—65

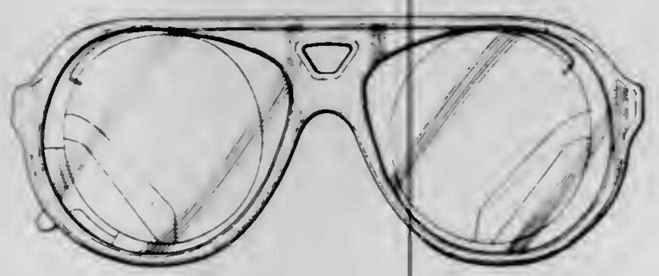

246,790
PAIR OF SPECTACLES
Larry G. Loughner, 6 Carisbrooke St., Andover, Mass. 01810
Filed Feb. 17, 1977, Ser. No. 769,767
Term of patent 14 years
Int. Cl. D16—*06*
U.S. Cl. D16—65

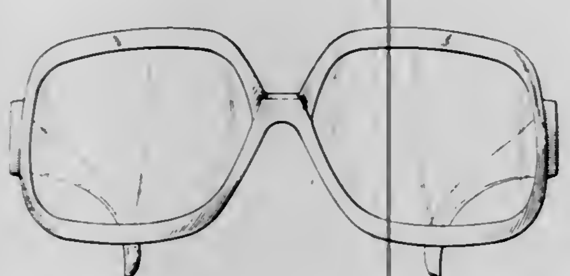

246,791
PAIR OF SPECTACLES
Anthony Shindler, 54 Marshall St., Brookline, Mass. 02186
Filed Feb. 17, 1977, Ser. No. 769,765
Term of patent 14 years
Int. Cl. D16—*06*
U.S. Cl. D16—65

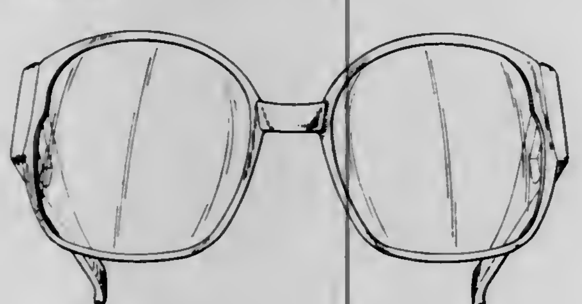

246,792
PAIR OF SPECTACLES
Larry G. Loughner, Andover, Mass., assignor to American Optical Corporation, Southbridge, Mass.
Filed Feb. 17, 1977, Ser. No. 769,768
Term of patent 14 years
Int. Cl. D16—*06*
U.S. Cl. D16—65

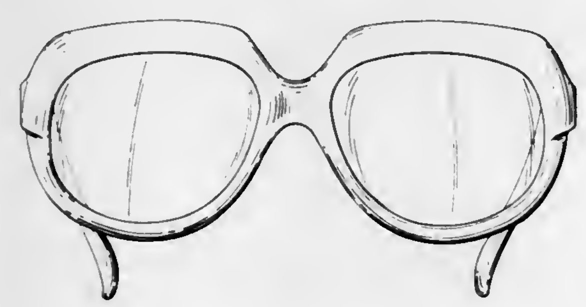

246,793
AQUARIUM FILTER
Marvin A. Goldman, Great Neck; Jerome N. Goldman, New York; Silvio J. DiMarchi, and Barbara A. Mesquida, both of Brooklyn, all of N.Y., assignors to Penn-Plax Plastics, Inc., Garden City, N.Y.
Filed Sept. 30, 1976, Ser. No. 728,391
Term of patent 14 years
Int. Cl. D23—*01*
U.S. Cl. D23—4

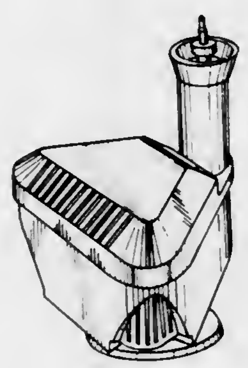

246,794
FAN FOR INTERNAL COMBUSTION ENGINES
Bern M. Bonifant, Tacoma, Wash., assignor to Flex-a-lite Corporation, Tacoma, Wash.
Filed Apr. 2, 1976, Ser. No. 673,122
Term of patent 14 years
Int. Cl. D23—*04*
U.S. Cl. D23—165

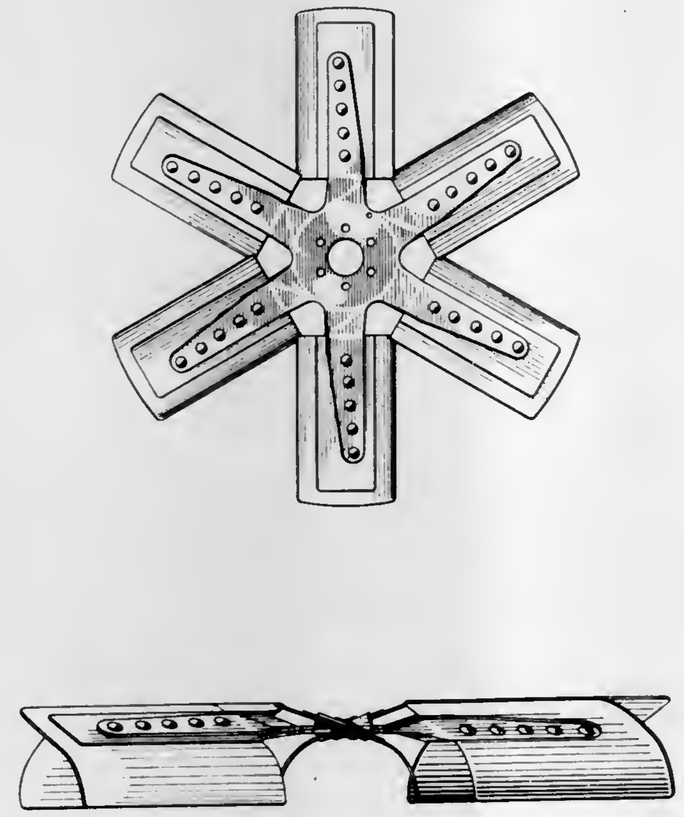

246,795
FAN BLADE
Bern M. Bonifant, Tacoma, Wash., assignor to Flex-a-lite Corporation, Tacoma, Wash.
Filed Apr. 2, 1976, Ser. No. 673,123
Term of patent 14 years
Int. Cl. D23—*04*
U.S. Cl. D23—165

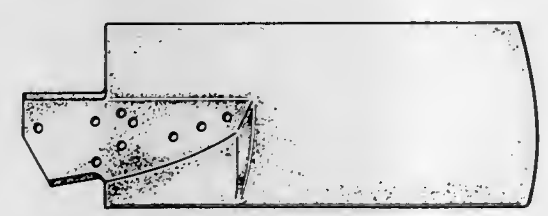

246,796
RADIATOR COOLING FAN
Stephen A. Laymon, Indianapolis, and Cheng-Chien Chou, Carmel, both of Ind., assignors to Wallace Murray Corporation, New York, N.Y.
Filed Oct. 27, 1976, Ser. No. 736,145
Term of patent 14 years
Int. Cl. D23—*04*
U.S. Cl. D23—165

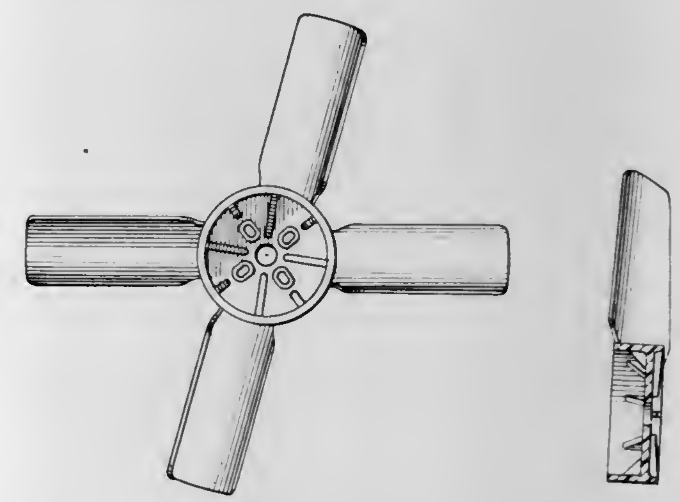

246,797
BITE-WING DENTAL X-RAY FILM HOLDER
Arthur C. Jermyn, 99 Whitestone Lane, Rochester, N.Y. 14618
Filed June 1, 1976, Ser. No. 691,312
Term of patent 14 years
Int. Cl. D24—*02, 99*
U.S. Cl. D24—02

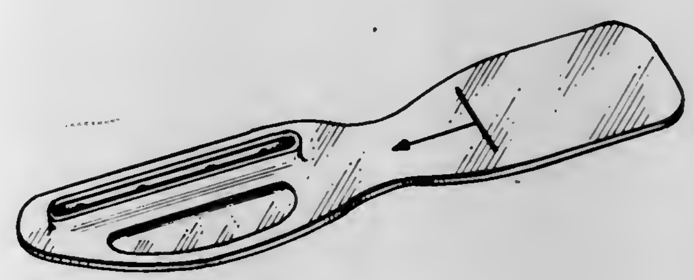

246,798
PERIAPICAL EXPOSURE DENTAL X-RAY FILM HOLDER
Arthur Charles Jermyn, 99 Whitestone Lane, Rochester, N.Y. 14618
Filed Dec. 20, 1976, Ser. No. 752,395
Term of patent 14 years
Int. Cl. D24—*02*
U.S. Cl. D24—2

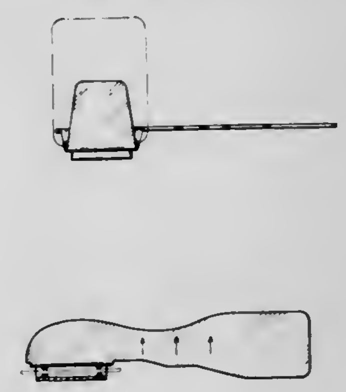

246,799
SPHYGMOMANOMETER
Donald H. Peeler, Henderson, N.C., assignor to Sybron Corporation
Filed Aug. 27, 1975, Ser. No. 608,086
Term of patent 14 years
Int. Cl. D24—*02*
U.S. Cl. D24—21

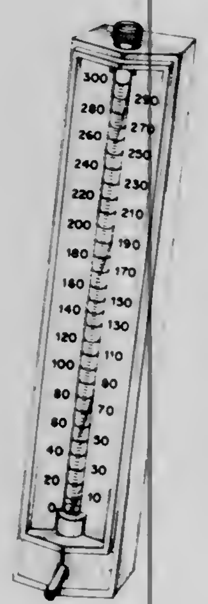

246,800
VIAL
Johnson N. S. Wong, 2910 Palos Verdes Drive, Rolling Hills, Calif. 90274
Filed Oct. 20, 1975, Ser. No. 623,833
Term of patent 14 years
Int. Cl. D24—*02*
U.S. Cl. D24—56

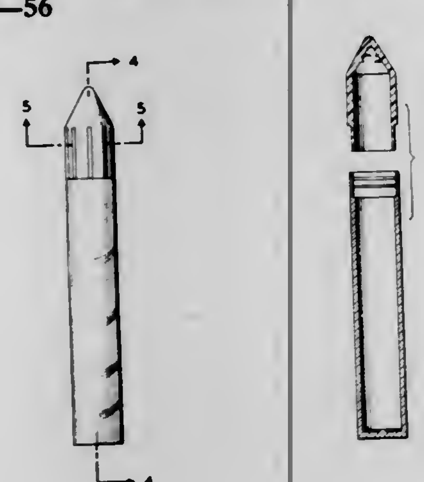

246,801
COMBINATION CELESTIAL DISPLAY AND RESTAURANT BUILDING
John S. Alden, 808 W. Cuyler St., Chicago, Ill. 60613
Filed Sept. 2, 1975, Ser. No. 609,543
Term of patent 14 years
Int. Cl. D25—*03*
U.S. Cl. D25—7

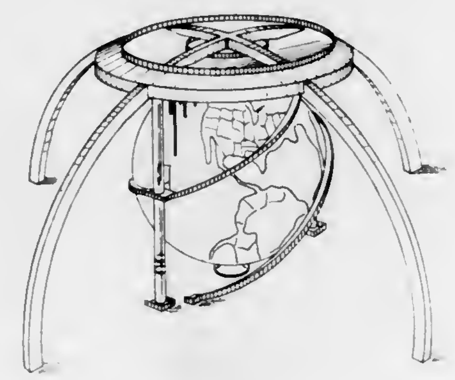

246,802
HOUSE
Ralph Mondragon, P.O. Box 199, Ranches of Taos, N. Mex. 87557
Filed Mar. 25, 1976, Ser. No. 670,255
Term of patent 14 years
Int. Cl. D25—*03*
U.S. Cl. D25—19

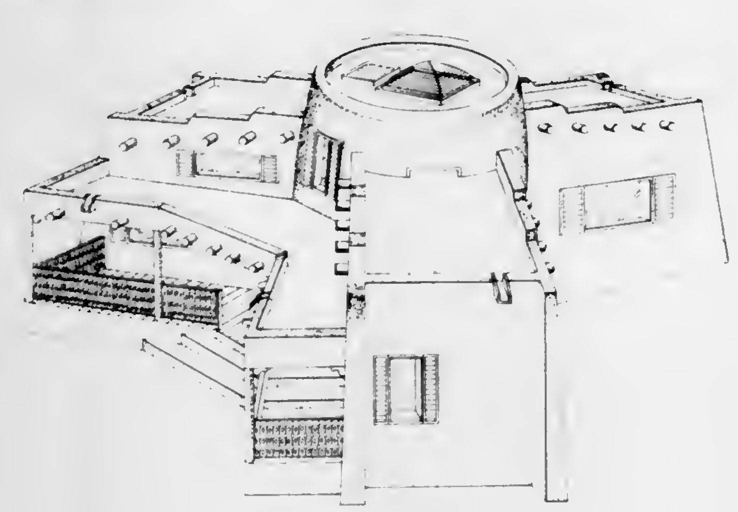

246,803
CIGARETTE AND CIGAR HOLDER
Mack Steinberg, 41 E. 20th St., New York, N.Y. 10003
Filed July 2, 1976, Ser. No. 702,181
Term of patent 14 years
Int. Cl. D27—*02*
U.S. Cl. D27—02

246,804
APPLICATOR FOR SUNTAN LOTIONS AND OTHER LIQUIDS
Gerry Donald Kesler, 4920 Ballard, Lansing, Mich. 48910
Filed Oct. 29, 1976, Ser. No. 736,992
Term of patent 14 years
Int. Cl. D28—*99;* D4—*02;* D8—*05*
U.S. Cl. D28—7

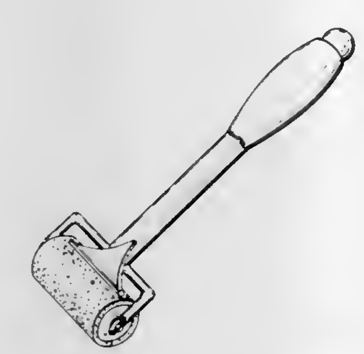

246,805
AIR CUSHION GAME TABLE
Joseph H. Gruenhut, Highland Park, Ill., assignor to Brunswick Corporation, Skokie, Ill.
Filed Jan. 8, 1976, Ser. No. 647,639
Term of patent 14 years
Int. Cl. D21—*01*
U.S. Cl. D34—5 BB

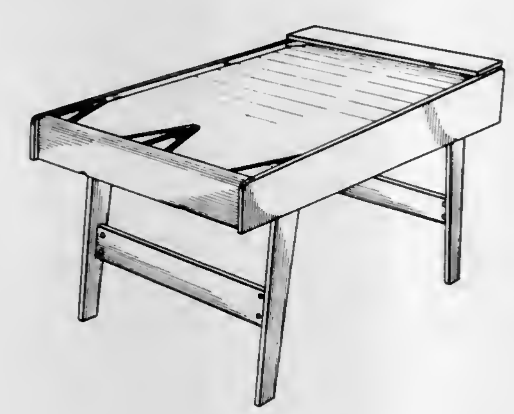

246,806
HANDLE FOR SKI POLE OR THE LIKE
William Iezzi, 3328 Rhawn St., Philadelphia, Pa. 19136
Filed Mar. 29, 1976, Ser. No. 671,051
Term of patent 14 years
Int. Cl. D21—*02*
U.S. Cl. D34—14 D

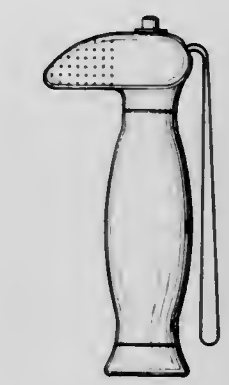

246,807
KITE
Aaron C. Moore, 20103 S. Radlett Ave., Carson, Calif. 90746
Filed Apr. 20, 1976, Ser. No. 678,476
Term of patent 7 years
Int. Cl. D21—*01*
U.S. Cl. D34—15 AF

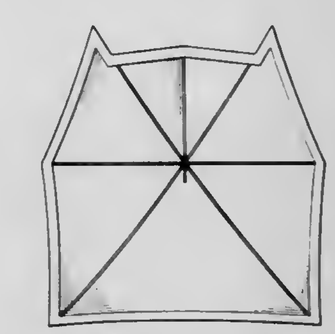

246,808
COMBINED FAIRWAY MAP, YARD MARKER AND BALL WASHER FOR A GOLF COURSE
Peter J. Genova, P.O. Box 309, Oakdale, Calif. 95361
Filed June 11, 1976, Ser. No. 695,075
Term of patent 14 years
Int. Cl. D21—*02*
U.S. Cl. D34—5 CB

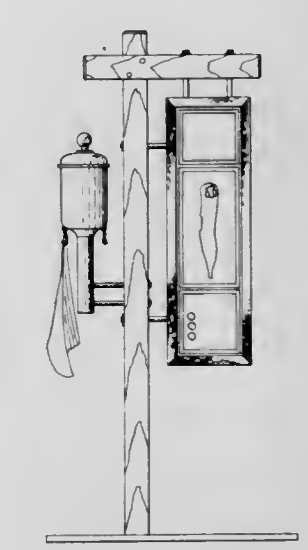

246,809
COMBINED FAIRWAY MAP, YARD MARKER, BALL WASHER AND REFUSE RECEIVER AND BENCH FOR A GOLF COURSE
Peter J. Genova, P.O. Box 309, Oakdale, Calif. 95361
Filed June 11, 1976, Ser. No. 695,269
Term of patent 14 years
Int. Cl. D21—*02*
U.S. Cl. D34—5 CB

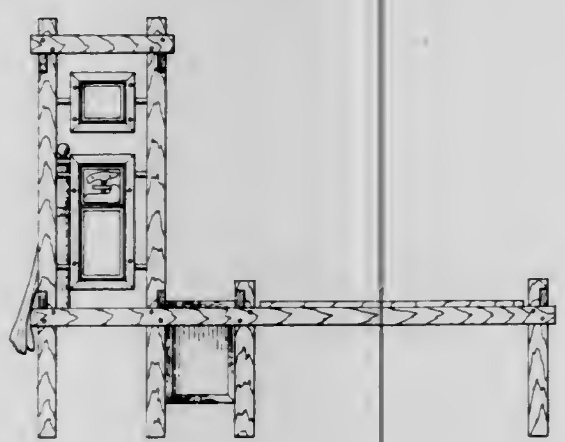

246,810
COMBINED FAIRWAY MAP, YARD MARKER, REFUSE RECEIVER, BENCH AND BALL WASHER FOR A GOLF COURSE
Peter J. Genova, P.O. Box 309, Oakdale, Calif. 95361
Filed June 11, 1976, Ser. No. 695,270
Term of patent 14 years
Int. Cl. D21—*02*
U.S. Cl. D34—5 CB

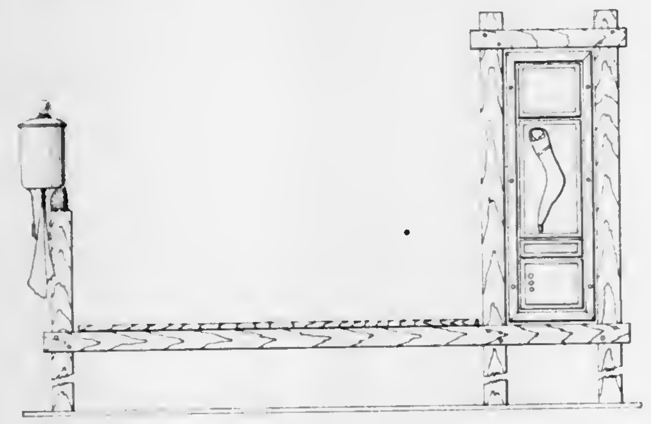

LIST OF PATENTEES

TO WHOM

PATENTS WERE ISSUED ON THE 27TH DAY OF DECEMBER, 1977

Note.—Arranged in accordance with the first significant character or word of the name (in accordance with city and telephone directory practice).

A. B. Dick Company: *See—*
Sund, Joseph T., 4,064,834, Cl. 118-646.000.
Aas, Flemming: *See—*
Jeppesen, Borge; and Aas, Flemming, 4,064,609, Cl. 29-235.000.
AB Bofors: *See—*
Brandstrom, Karl Ivar, 4,064,731, Cl. 72-419.000.
Dahlberg, Stig Erland; and Gellerstedt, Nils Goran Axel, 4,064,805, Cl. 102-35.000.
Eklund, John Folke; and Svensson, Sven-Hakan, 4,064,787, Cl. 89-34.000.
Elwin, Tore, 4,064,786, Cl. 89-33.00B.
AB Svenska Flaktfabriken: *See—*
Lindgren, Stig Rune, 4,064,637, Cl. 34-122.000.
Abe, Fumiyuki; Ikawa, Kazuo; Ehama, Mituo; and Ogawa, Naoki, to Nissan Motor Co., Ltd. Knee protector. 4,065,157, Cl. 280-751.000.
Abe, Takemi: *See—*
Iwai, Naoji; Uchida, Takashi; and Abe, Takemi, 4,065,625, Cl. 428-596.000.
Aberg, Sven Ulrik Torbjorn; and Bergdahl, Sven Gunnar, to Molnlycke AB. Method of producing fluffed pulp. 4,065,347, Cl. 162-26.000.
Abrahamsson, Axel B.: *See—*
Bistrick, Eugene J.; Abrahamsson, Axel B.; Szewczyk, Andrew J.; McCabe, Frank A.; Schlaf, Richard A.; and Gabriele, Leonard A., 4,065,222, Cl. 407-18.000.
Acda, Petrus Marinus; and Karreman, Jacob, to Polva Nederland B.V. Apparatus for forming a thickened bell end on thermoplastic pipe. 4,065,243, Cl. 425-393.000.
Achelpohl, Fritz; and Schmedding, Herbert, to Windmoller & Holscher. Multi-layer bag open at one side. 4,065,049, Cl. 229-55.000.
Ackerman, Maria Elena Perdomo. Automatic bypass coffee brewer. 4,064,795, Cl. 99-304.000.
Acme-Cleveland Corporation: *See—*
Naegele, Robert, 4,064,926, Cl. 164-154.000.
Adams, Edward C.: *See—*
Meier, Michael J.; Adams, Edward C.; and Lindberg, Richard W., 4,065,788, Cl. 358-166.000.
Adams-Russell Co., Inc.: *See—*
Seavey, John M., 4,065,772, Cl. 343-786.000.
Adams, Ted, to Parker-Hannifin Corporation. Hydraulic actuator. 4,065,094, Cl. 251-26.000.
Adcock, Willis A.; and Skaggs, Frank L., to Texas Instruments Incorporated. Single sensor time encoded color imaging system. 4,065,785, Cl. 358-44.000.
Addressograph Multigraph Corporation: *See—*
Schweitzer, Roy C., 4,064,804, Cl. 101-451.000.
Adelmann, Siegfried; Margotte, Dieter; Vernaleken, Hugo; and Nouvertne, Werner, to Bayer Aktiengesellschaft. Thermoplastic polycarbonate moulding compositions with improved ease of mould release. 4,065,436, Cl. 260-47.0XA.
Adler, Robert B. Drill tip and threaded fastener. 4,064,784, Cl. 85-41.000.
Advanced Instrument Development, Inc.: *See—*
Fiocca, Louis L., 4,065,673, Cl. 250-402.000.
AGFA-Gevaert, A.G.: *See—*
Weyde, Edith; von Konig, Anita; and Liebe, Werner, 4,065,312, Cl. 96-50.00R.
AGFA-GEVAERT N.V.: *See—*
Laridon, Urbain Leopold; Delzenne, Gerard Albert; Mader, Helmut; Ulrich, Hans; and Seidel, Bernhard, 4,065,524, Cl. 260-895.000.
Aglitsky, Vladimir Efimovich: *See—*
Alexandrov, Adolf Moritsovich; Aglitsky, Vladimir Efimovich; Tsimbler, Jury Abramovich; Lurie, Mikhail Vladimirovich; Topolyansky, Jury Arnoldovich; Kantor, Ilya Solomonovich; Chizhikov, Anatoly Petrovich; and Gun, Dmitry Rudolfovich, 4,065,076, Cl. 243-38.000.
Agrawal, Arun K.: *See—*
Hou, Shou L.; Dague, Leonard P.; and Agrawal, Arun K., 4,065,775, Cl. 346-140.00R.
Ahlgren, David William, to Jeno F. Paulucci. Method of cooking an item of food, using a food sheet and an open bottomed pan. 4,065,583, Cl. 426-243.000.
Air Products and Chemicals, Inc.: *See—*
Collins, Jr.; Watson R.; and Kokinda, James J., 4,064,890, Cl. 137-73.000.
Newton, Charles L.; and Gaumer, Lee S., 4,065,278, Cl. 62-26.000.
Airco, Inc.: *See—*
Timin, Mitchell E., 4,065,097, Cl. 251-228.000.
Aisin Seiki Kabushiki Kaisha: *See—*
Sawada, Toshio; Yamamoto, Kimihiko; and Ishikawa, Hitoshi, 4,064,817, Cl. 112-158.00F.
Ajami, Alfred M.; Walsh, Fraser M.; and Crouse, Dennis N., to Eco-Control, Inc. Two phase electrolytes used as halogen traps in metal halogen secondary cells and batteries. 4,065,601, Cl. 429-50.000.
Ajdukovic, Djordje: *See—*
Bharucha, Kekhusroo R.; Ajdukovic, Djordje; Pavilanis, Vytautas; and Schrenk, Heinrich Maria, 4,065,570, Cl. 424-273.00R.
Bharucha, Kekhusroo R.; Ajdukovic, Djordje; Pavilanis, Vytautas; and Schrenk, Heinrich Maria, 4,065,571, Cl. 424-273.00R.
Akamatsu, Keiji, to Roland Corporation. Circuit for preferentially selecting highest and lowest tones. 4,064,777, Cl. 84-1.030.
Akashi Factory, Kawasaki Heavy Industries, Ltd.: *See—*
Nakaya, Akira; and Maruyama, Haruyoshi, 4,065,276, Cl. 55-276.000.
Akiyama, Masaharu: *See—*
Kawaguchi, Yoshihiko; Harada, Yoshimi; Miki, Makoto; Gouda, Kanenari; Akiyama, Masaharu; Tokura, Masayuki; and Kuroha, Jun, 4,065,419, Cl. 260-28.50D.
Akiyama, Takashi; Tanji, Akinori; Ikeda, Hideo; and Asano, Seiichi, to Toyobo Co., Ltd. Method for producing non-woven webs. 4,064,605, Cl. 28-103.000.
Aktay, Ali I.; Bodnaruk, Bohdan J.; and Holowaty, Michael O., to Inland Steel Company. Apparatus and method for separating a mixture of liquid and coal fines. 4,065,385, Cl. 210-44.000.
Aktieselskabet Grindstedvaerket: *See—*
Ross-Petersen, Karl Jakob, 4,065,461, Cl. 260-296.0AE.
Akzona Incorporated: *See—*
Beck, Heinz; Gabriel, Gerhard; and Poppel, Gunter, 4,065,608, Cl. 526-49.000.
Alan I W Frank Corporation, The: *See—*
Frank, Alan I W, 4,065,244, Cl. 425-412.000.
Schaeffer, Paul R., 4,065,530, Cl. 264-41.000.
Schaeffer, Paul R., 4,065,531, Cl. 264-41.000.
Alan Wood Steel Company: *See—*
Semel, Frederick J., 4,065,331, Cl. 148-36.000.
Albrecht, David E. Hydraulic fluid reservoir for a closed hydraulic system. 4,064,911, Cl. 138-30.000.
Alexandrov, Adolf Moritsovich; Aglitsky, Vladimir Efimovich; Tsimbler, Jury Abramovich; Lurie, Mikhail Vladimirovich; Topolyansky, Jury Arnoldovich; Kantor, Ilya Solomonovich; Chizhikov, Anatoly Petrovich; and Gun, Dmitry Rudolfovich. Pipeline for pneumatic transportation of cargoes in containers. 4,065,076, Cl. 243-38.000.
Alfred Gutmann Gesellschaft fur Maschinenbau: *See—*
Zeidler, Johannes, 4,064,656, Cl. 51-426.000.
Alfred Herbert Limited: *See—*
O'Brien, Rory Morgan, 4,065,716, Cl. 324-96.000.
Algard Pty. Ltd.: *See—*
Rigby, Robert Alexander, 4,065,386, Cl. 210-60.000.
Alison, Dave R. Kite reel system. 4,065,080, Cl. 244-155.00A.
Allan, Roy Duncan: *See—*
Johnson, James Edward; Foster, Tom; and Allan, Roy Duncan, 4,064,692, Cl. 60-261.000.
Allied Chemical Corporation: *See—*
Hasegawa, Ryusuke, 4,064,757, Cl. 73-362.0AR.
Allis-Chalmers Corporation: *See—*
Heian, Glenn A.; and Kohl, Robert F., 4,065,320, Cl. 106-100.000.
Allison, Kenneth C. Electrical connector. 4,065,637, Cl. 174-87.000.
Allison, William D. Multivane windmill. 4,065,225, Cl. 416-121.000.
Allmanna Svenska Elektriska Aktiebolaget: *See—*
Larsson, Hans Gunnar; and Westman, Erik, 4,064,723, Cl. 72-60.000.
Allyn, Charles L.; Manlove, James C.; Chang, Gerald M.; and Burmark, Robert C., to Reichhold Chemicals, Inc. Continuous process for the production of aqueous urea-formaldehyde solutions. 4,065,421, Cl. 260-29.40R.
Alter, Hobart L.; and Hutchinson, Peter L. V., to Coast Catamaran Corporation. Molding process. 4,065,337, Cl. 156-78.000.
Althausen, Ferdinand; and Raffel, Reiner, to Maschinenfabrik Hennecke GmbH. Mixing head for machines for producing multicomponent plastics. 4,065,106, Cl. 366-76.000.
Aluminum Company of America: *See—*
Booz, A. David, 4,065,060, Cl. 241-16.000.
Alyea, Frederick N.: *See—*
Zavitsanos, Peter D.; Golden, Joseph A.; and Alyea, Frederick N., 4,065,207, Cl. 350-312.000.
Amada Company, Limited: *See—*
Amano, Tadashi; Kawano, Susumu; Mano, Kenji; and Irisawa, Takaji, 4,064,727, Cl. 72-179.000.
Amano, Tadashi; Kawano, Susumu; Mano, Kenji; and Irisawa, Takaji, to Amada Company, Limited. Roll forming machine. 4,064,727, Cl. 72-179.000.
Amax Inc.: *See—*
Lussiez, Guy W.; and Reid, Hugh F., 4,065,105, Cl. 366-348.000.
Amdall, John K.; and Simmons, Gerald P., to Caterpillar Tractor Co.

Control pedal-mechanical speed with electrical direction control. 4,064,769, Cl. 74-878.000.
American Air Filter Company, Inc.: *See—*
Dahlem, Francis E., 4,065,277, Cl. 55-418.000.
American Can Company: *See—*
Detroit, William John; and Sanford, Michael Elliot, 4,065,318, Cl. 106-90.000.
Rentmeester, Kenneth R.; Jurcenko, John A.; and Welks, John D., 4,065,023, Cl. 220-75.000.
Sieverin, Walter Joseph, 4,064,737, Cl. 73-17.00R.
American Cyanamid Company: *See—*
Bambrick, William Edward, 4,065,407, Cl. 252-463.000.
Berkelhammer, Gerald; and Asato, Goro, 4,065,567, Cl. 424-272.000.
Casey, Donald James, 4,064,564, Cl. 2-168.000.
Gordon, Fred Morris, 4,065,558, Cl. 424-216.000.
Reger, David William; Garber, Murray; and Long, Don Wesley, 4,065,466, Cl. 260-327.00M.
American Filtrona Corporation: *See—*
Berger, Richard M., 4,064,791, Cl. 93-1.00C.
American Home Products: *See—*
McCaully, Ronald J.; Nudelman, Abraham; and Bell, Stanley C., 4,065,451, Cl. 260-239.30D.
American Home Products Corporation: *See—*
Chou, Chih H.; and Myers, Gordon S., 4,065,488, Cl. 260-467.000.
Strike, Donald Peter, 4,065,494, Cl. 260-514.00D.
American Warming and Ventilating Inc.: *See—*
Lichtenwald, Roger A., 4,064,670, Cl. 52-473.000.
AMSTED Industries Incorporated: *See—*
Mulcahy, Harry William, 4,064,809, Cl. 105-167.000.
Andersen, John A.; and Harty, Gene R., to United States of America, Energy Research and Development Administration. Nose tip locking device. 4,065,217, Cl. 403-24.000.
Anderson, Arnold L., to Velsicol Chemical Corporation. Plastic compositions. 4,065,429, Cl. 260-45.95G.
Anderson, Bror E.: *See—*
Schick, Margery L.; and Anderson, Bror E., 4,065,595, Cl. 428-141.000.
Anderson, David Robert; Anderson, Wilbert Cleon; and Jenkins, Vaughn Junior, to Sperry Rand Corporation. Reel servo control system. 4,065,074, Cl. 242-184.000.
Anderson, Wilbert Cleon: *See—*
Anderson, David Robert; Anderson, Wilbert Cleon; and Jenkins, Vaughn Junior, 4,065,074, Cl. 242-184.000.
Andersson, Rickard, to Linden-Alimak AB. Method and device for dismounting or mounting jib sections on a tower crane. 4,064,615, Cl. 29-426.000.
Ando, Shizuo: *See—*
Owaki, Kenichi; Ando, Shizuo; and Nakayama, Norihiko, 4,065,698, Cl. 313-489.000.
Andre, Michael G.; Schmidt, Melvin J.; and Osman, Kenneth L., to Methode Electronics, Inc. Flat cable wiring harness and method of producing same. 4,065,199, Cl. 339-17.00F.
Andrews, Philip S.; Farrissey, William J., Jr.; Onder, Besir K.; and Tilley, James N., to Upjohn Company, The. Copolyamide from arylene diamine and mixture of alkylene dicarboxylic acids. 4,065,441, Cl. 260-78.00R.
Andrillon, Patrick; and Bugaut, Andree, to L'Oreal. 2-Methyl-5-N-hydroxyalkylaminophenol in an oxidation dye composition and method of using the same. 4,065,255, Cl. 8-10.200.
ANIC, S.p.A.: *See—*
Moggi, Pietro Antonio; and Iori, Giuseppe, 4,065,469, Cl. 260-346.710.
Anthony, Albert M., to Tracor, Inc. Static convergence devices for color television picture tubes. 4,065,737, Cl. 335-212.000.
Anthony, James, to Fuller Company. Liners for crusher. 4,065,064, Cl. 241-299.000.
Anton, Rainer; Beyer, Ernst; and Bielefeld, Bodo, to Triumph Werke Nurnberg A.G. Printing ribbon. 4,064,982, Cl. 197-1.00R.
Apel, Fred B.; and Olson, Jerome B. Sound deadening means for use on a bar feeding machine. 4,064,773, Cl. 82-38.00A.
Apel, Gerhard: *See—*
Cohnen, Wolfgang; and Apel, Gerhard, 4,065,401, Cl. 252-350.000.
Aplicaciones Industriales de Cromo Duro, S.A.: *See—*
Ibarguengoitia, Juan Retolaza, 4,065,365, Cl. 204-25.000.
April, Joseph Richard: *See—*
Cunningham, James Thomas; Snow, Frederick Orren, III; April, Joseph Richard; and Yu, A. Tobey, 4,065,002, Cl. 214-14.000.
Apstein, Maurice; and Kalmus, Henry P., to United States of America, Army. Ultrasonic remote control system. 4,064,806, Cl. 102-70.20R.
Aqua Plex Products: *See—*
Montgomery, William H., 4,064,837, Cl. 119-5.000.
Archibald Kenrick and Sons Limited: *See—*
Hamblin, Richard David, 4,065,165, Cl. 292-348.000.
Armond, John Walter, to BOC International Limited. Oxygen-enriched air. 4,065,272, Cl. 55-25.000.
Armour and Company: *See—*
Orlowski, Gerald J., 4,065,241, Cl. 425-228.000.
Armstrong Cork Company: *See—*
Rueggeberg, Werner; and Wiker, Joseph J., 4,065,137, Cl. 277-34.000.
Armstrong, James E. Sheave forming method. 4,064,724, Cl. 72-108.000.
Armstrong, Kenneth Ronald: *See—*
Englert, Robert Dixon; and Armstrong, Kenneth Ronald, 4,065,526, Cl. 261-62.000.
Armstrong, Lee R.: *See—*
Mercik, Henry J., Jr.; and Armstrong, Lee R., 4,064,746, Cl. 73-116.000.
Rackliffe, Richard J.; Goodfriend, Harvey J.; and Armstrong, Lee R., 4,064,747, Cl. 73-116.000.
Arndt, Friedrich: *See—*
Boroschewski, Gerhard; and Arndt, Friedrich, 4,065,293, Cl. 71-100.000.
Arnold, Anthony Francis, to RCA Corporation. Method of making gold-cobalt contact for silicon devices. 4,065,588, Cl. 427-89.000.
Arrasmith, Fred Victor; Bruns, Donald George; Moffitt, John Stuart; and Moss, Stanton Kline, to International Business Machines Corporation. Apparatus for stacking documents in sequence. 4,065,123, Cl. 271-215.000.
Arrow-Acme Corporation: *See—*
Borgen, Arden L.; and Merrill, Cleon C., 4,064,895, Cl. 137-216.000.
Arthur D. Little, Inc.: *See—*
McCullough, John E., 4,065,279, Cl. 62-510.000.
Asahara, Yoshijuki; and Izumitani, Tetsuro, to Hoya Glass Works, Ltd. Method for making a glass-based soft-edged aperture filters. 4,065,283, Cl. 65-30.00E.
Asahi Glass Co., Ltd.: *See—*
Nakaya, Keiichi; Hirata, Suekazu; and Sato, Kunio, 4,065,270, Cl. 23-299.000.
Oda, Yoshio; Suhara, Manabu; and Endo, Eiji, 4,065,366, Cl. 204-98.000.
Asami, Hiroshi; and Kaji, Masao, to New Nippon Electric Co., Ltd. Method and apparatus for plating under constant current density. 4,065,374, Cl. 204-228.000.
Asano, Seiichi: *See—*
Akiyama, Takashi; Tanji, Akinori; Ikeda, Hideo; and Asano, Seiichi, 4,064,605, Cl. 28-103.000.
Asato, Goro: *See—*
Berkelhammer, Gerald; and Asato, Goro, 4,065,567, Cl. 424-272.000.
Ashland Oil, Inc.: *See—*
Chesnutt, Gary A., 4,065,265, Cl. 23-259.500.
Gannon, Charles R., 4,065,591, Cl. 428-36.000.
Shields, Theodore C., 4,065,498, Cl. 260-566.00F.
Ashley-Butler, Inc.: *See—*
Caplan, Sandor, 4,064,872, Cl. 128-2.00H.
Asp, Hans Eskil, to C. J. Wennberg AB. Method and device for stripping off, washing and drying surface treated objects in long lengths such as strip, wire, rod, sections or fibres. 4,064,884, Cl. 134-15.000.
Associated Electrical Industries Limited: *See—*
Croft, Edward F. B.; and Lane, John J., 4,065,251, Cl. 432-59.000.
Asta-Werke Aktiengesellschaft: *See—*
Emig, Peter; Pohle, Hans; Scheffler, Gerhard; Brock, Norbert; Lenke, Hans-Dieter; and Pohl, Jorg, 4,065,501, Cl. 260-570.600.
Astatic Corporation, The: *See—*
Cvetko, Henry J.; and Kuykendall, John L., 4,065,134, Cl. 274-37.000.
Cvetko, Henry J.; and Peterson, Donald W., 4,065,648, Cl. 179-178.000.
Atkinson, Joseph George; Rooney, Clarence Stanley; Girard, Yves; and Engelhardt, Edward L., to Merck & Co., Inc. Amino acids and esters thereof useful as antihypertensive agents. 4,065,572, Cl. 424-273.00R.
Atlanta Metal Products, Inc.: *See—*
Fox, John F., 4,064,819, Cl. 113-55.000.
Atlantic Richfield Company: *See—*
Zehner, Lee R., 4,065,490, Cl. 560-204.000.
Atlas Copco Aktiebolag: *See—*
Bratt, Sven Ake; and Moberg, Carl Ake, 4,064,948, Cl. 173-12.000.
Atomic Energy of Canada Limited: *See—*
Cheadle, Brian A., 4,065,328, Cl. 148-12.70B.
Attwood, Stanley W., to Motorola, Inc. Multipath communications system. 4,065,718, Cl. 325-65.000.
Atwell, Max Raymond. Safety closure for portable receptacles. 4,065,024, Cl. 220-203.000.
Audiotronics Corporation: *See—*
Warner, Donald E.; and Oyama, George C., 4,065,645, Cl. 179-156.00R.
Augustin, Ulrich, to Daimler-Benz Aktiengesellschaft. Control mechanism for injection pump. 4,064,856, Cl. 123-140.00R.
Autoipari Kutato Intezet: *See—*
Cser, Gyula, 4,064,696, Cl. 60-598.000.
Koroknay, Laszlo; and Urbantsok, Janos, 4,065,148, Cl. 280-432.000.
Automotive Products: *See—*
Jenkins, Stanley Frederick Noel; Fairclough, Roy; Howard, Brian Arthur; and Miley, Frederick, 4,065,078, Cl. 244-104.0FP.
Avco Everett Research Laboratory, Inc.: *See—*
Scammell, Frank H., 4,065,732, Cl. 331-94.50C.
Axen, Udo F., to Upjohn Company, The. 2,2-Difluoro-13,14-dihydro-PGA_1 analogs. 4,065,633, Cl. 560-121.000.
B/W Controls, Inc.: *See—*
Bongort, Edgar A.; and Cruickshank, William T., 4,064,755, Cl. 73-313.000.
Baak, Nils Tryggve E. A.; and Rapp, Charles F., to Nippon Electric Glass Company, Ltd. Novel glass compositions. 4,065,317, Cl. 106-52.000.
Babb, Larry F.: *See—*
Dickey, John W.; and Babb, Larry F., 4,065,242, Cl. 425-384.000.
Babler, Egon S., to Teletype Corporation. Print hammer bumper exhibiting dual resiliency characteristics. 4,064,799, Cl. 101-93.020.

Bacha, John D.; Matthews, Joseph S.; and Selwitz, Charles M., to Gulf Research & Development Company. Process for producing maleic anhydride from mixture of five and six carbon hydrocarbons. 4,065,470, Cl. 260-346.750.
Bailey, David P., to Raymond Lee Organization, Inc., The. Gasoline supply accessory. 4,064,901, Cl. 137-351.000.
Bailey, Francis M., to General Electric Company. Static speed control circuit for polyphase induction motors. 4,065,704, Cl. 318-237.000.
Bailey, Frederick Eugene; von Dohlen, Werner Claus; Matzner, Markus; Young, Robert Hayward; and Robeson, Lloyd Mahlon, to Union Carbide Corporation. Gradient polymers of two or more alpha monoolefinic monomers capable of polymerizing with themselves and each other. 4,065,520, Cl. 260-878.00B.
Bailey, Wayne E., to Gulf Research & Development Company. Aryl diurea-thickened greases. 4,065,395, Cl. 252-25.000.
Baird, Albert W., III, to Beckman Instruments, Inc. Cathode assembly for two-dimensional scanned gas discharge display panel. 4,065,699, Cl. 315-169.0TV.
Baird, William C., Jr.: *See—*
Say, Geoffrey R.; Baird, William C., Jr.; and Kamienski, Paul W., 4,065,381, Cl. 208-134.000.
Baker Brush Co., Inc.: *See—*
Swanson, Harold, 4,064,991, Cl. 211-49.00R.
Baker, James T.: *See—*
Williams, Donald L.; and Baker, James T., 4,065,026, Cl. 220-304.000.
Balda-Werke Photographische Gerate und Kunststoff GmbH & Co., KG: *See—*
Lange, Karl Heinz, 4,065,779, Cl. 354-145.000.
Ballantyne, Joseph M., to Cornell Research Foundation, Inc. Tunnel injection of minority carriers in semi-conductors. 4,065,780, Cl. 357-6.000.
Bambrick, William Edward, to American Cyanamid Company. Process for preparing shaped particles from rehydratable alumina. 4,065,407, Cl. 252-463.000.
Ban, Kazuhiro: *See—*
Kondoh, Teruo; Ban, Kazuhiro; Kawamoto, Akio; Masuno, Yoshiki; and Yoshida, Mitsuhiro, 4,065,768, Cl. 343-9.000.
Banner Metals Div. of Intercole Automation: *See—*
Wilson, James D., 4,065,141, Cl. 280-33.99H.
Barbier, Daniel; Ittel, Jean-Michel; and Poujois, Robert, to Commissariat a l'Energie Atomique. Alarm detector responsive to rate of change of a monitored condition. 4,065,758, Cl. 340-227.00R.
Barker International, Inc.: *See—*
Crane, Edward J., 4,064,596, Cl. 17-11.10R.
Barker, James E., to Cities Service Company. Energy conserving process for purifying iron oxide. 4,065,294, Cl. 75-3.000.
Barnes, Wilson J.: *See—*
Lupinski, John H.; Boldebuck, Edith M.; and Barnes, Wilson J., 4,065,420, Cl. 260-29.20N.
Baron, William James; and Capano, Patrick John, to Western Electric Company, Incorporated. Printing ink. 4,065,316, Cl. 106-20.000.
Barrington, Burchus Q., to Halliburton Company. Annulus pressure operated closure valve with reverse circulation valve. 4,064,937, Cl. 166-162.000.
Barry, Leonard D. Container side-transfer system. 4,065,006, Cl. 214-42.00R.
Bart, Hansueli, to Eaton Corporation. Metering valve for pilot fuel injection. 4,064,845, Cl. 123-32.00G.
Bartels, Vernon A., to Schlage Lock Company. Fire-safe lever handle. 4,065,164, Cl. 292-347.000.
Barth, Horst: *See—*
Holzbaur, Siegfried; and Barth, Horst, 4,064,847, Cl. 123-32.0EJ.
Bartley, Burton H.; and Estes, John H., to Texaco Inc. Preparation of methane. 4,065,514, Cl. 260-676.00R.
Bartok, Stephen, to Ideal Toy Corporation. Pin ball bumper mechanism with rotational drive. 4,065,129, Cl. 273-121.00A.
Barton, Lucian Anthony: *See—*
Ross, Daniel Louis; and Barton, Lucian Anthony, 4,065,306, Cl. 96-1.00R.
BASF Aktiengesellschaft: *See—*
Blinne, Gerd; and Cordes, Claus, 4,065,437, Cl. 260-49.000.
Koenig, Horst; Prinzbach, Horst; and Schwesinger, Reinhard, 4,065,454, Cl. 260-250.00P.
Wild, Hans; Jeckel, Guenter; Echte, Adolf; Zizlsperger, Johann; Reffert, Rudi Wilhelm; and Thielen, Gunter, 4,065,532, Cl. 264-68.000.
Bateman, Mark E.; and Palmer, Jeffrey T., to Standard Oil Company (Indiana). Paper sizing process. 4,065,349, Cl. 162-158.000.
Batka, Robert J.: *See—*
Billington, Evans R.; and Batka, Robert J., 4,064,907, Cl. 137-614.200.
Baudoin, Patrice, to Regie Nationale des Usines Renault. Charging an accumulator by a heat engine. 4,064,694, Cl. 60-413.000.
Baum, Elliott W., to Berco Industries. Table leg locking mechanism. 4,064,815, Cl. 108-129.000.
Baxter Travenol Laboratories, Inc.: *See—*
Phillips, Thomas E., 4,065,093, Cl. 251-6.000.
Bayer Aktiengesellschaft: *See—*
Adelmann, Siegfried; Margotte, Dieter; Vernaleken, Hugo; and Nouvertne, Werner, 4,065,436, Cl. 260-47.0XA.
Bien, Hans-Samuel; and Harms, Wolfgang, 4,065,446, Cl. 260-146.00D.
Cohnen, Wolfgang; and Apel, Gerhard, 4,065,401, Cl. 252-350.000.
Fest, Christa; Enders, Edgar; Eue, Ludwig; and Schmidt, Robert R., 4,065,292, Cl. 71-99.000.
Frommer, Werner; Gericke, Horst; Keup, Uwe; Puls, Walter; Schmidt, Delt; and Wagner, Otto, 4,065,557, Cl. 424-181.000.
Hofer, Wolfgang; Schliebs, Reinhard; Schmidt, Robert; and Eue, Ludwig, 4,065,288, Cl. 71-76.000.
Lippert, Axel; Joisten, Siegfried; and Sajben, Johannes-Otto, 4,065,339, Cl. 156-149.000.
Mayer, Karl Heinrich; Hoffmeister, Friedrich; and Wuttke, Wolfgang, 4,065,568, Cl. 424-273.00P.
Schafer, Hermann; and Weber, Christian, 4,065,410, Cl. 260-2.5AM.
Spielberger, Georg; Wunderlich, Hermann; Klag, Gunther; and Zlokarnik, Marko, 4,065,492, Cl. 260-508.000.
Beach Manufacturing Corporation: *See—*
Czinger, David B., 4,064,803, Cl. 101-415.100.
Beam, John E.: *See—*
Reggio, Richard A.; Friello, Dominick R.; and Beam, John E., 4,065,578, Cl. 426-3.000.
Beard, Thomas N.: *See—*
Hill, David A.; Pearson, Durk J.; Motley, Ethelyn P.; Beard, Thomas N.; and Farrell, James L., 4,065,183, Cl. 299-4.000.
Beck, Heinz; Gabriel, Gerhard; and Poppel, Gunter, to Akzona Incorporated. Process for the preparation of cationic paper sizing agents. 4,065,608, Cl. 526-49.000.
Beck, Ivan: *See—*
Rakoczi, Jozsef; Beck, Ivan; Kiss, Csaba; Horvath, Imre; and Nemes, Miklos, 4,065,450, Cl. 260-239.00B.
Beck, James Richard; and Gajewski, Robert Peter, to Eli Lilly and Company. Herbicidal 2-methyl-4-phenyl-5-isoxazolinones. 4,065,463, Cl. 260-307.00A.
Becker, Kurt, to Hermann Heye. Machine for the production of containers or the like of vitreous material. 4,065,286, Cl. 65-229.000.
Becker, Phillip R. Safety motor control means for an electrically driven machine. 4,065,707, Cl. 318-285.000.
Beckman Instruments, Inc.: *See—*
Baird, Albert W., III, 4,065,699, Cl. 315-169.0TV.
Becton, Dickinson and Company: *See—*
Reno, Woodrow James, 4,064,871, Cl. 128-2.00G.
Beecham Group Limited: *See—*
Buckle, Derek Richard; Cantello, Barrie Christian Charles; and Smith, Harry, 4,065,457, Cl. 260-289.00K.
Behringwerke Aktiengesellschaft: *See—*
Bohn, Hans; and Stutzinger, Ferdinand, 4,065,445, Cl. 260-112.00B.
Behrmann, William C.: *See—*
Moser, John F., Jr.; and Behrmann, William C., 4,065,516, Cl. 260-683.470.
Beizerov, Semen Moiseevich; Vyboischikov, Felix Petrovich; Bloshenko, Vladimir Viktorovich; and Syaskin, Jury Mikhailovich. Skull furnace for melting highly reactive metals under vacuum or neutral atmosphere. 4,065,634, Cl. 13-10.000.
Bejarano, Thomas M.; Schmidt, Herbert; and Schmidt, Joseph J., to Builders Brass Works. Door closer. 4,064,589, Cl. 16-53.000.
Beke, Gunther Rudolf: *See—*
Kaan, Peter; and Beke, Gunther Rudolf, 4,064,963, Cl. 181-244.000.
Bell & Howell Company: *See—*
Fleischman, Andor A., 4,065,205, Cl. 350-216.000.
Bell, Robert A.: *See—*
Yount, Ronald E.; and Bell, Robert A., 4,065,659, Cl. 219-398.000.
Bell, Stanley C.: *See—*
McCaully, Ronald J.; Nudelman, Abraham; and Bell, Stanley C., 4,065,451, Cl. 260-239.30D.
Bell Telephone Laboratories: *See—*
Girod, Ronald Eugene, 4,065,643, Cl. 179-18.0AH.
Bell Telephone Laboratories, Incorporated: *See—*
Holtzman, Kenneth Allan, 4,065,368, Cl. 204-159.230.
Schuh, Peter Otto, 4,065,646, Cl. 179-170.00R.
Bell, Vernon L.: *See—*
Progar, Donald J.; Bell, Vernon L.; and St. Clair, Terry L., 4,065,345, Cl. 156-309.000.
Belleau, Bernard R.; Doyle, Terrence W.; Luh, Bing Yu; and Conway, Terry T., to Bristol-Myers Company. O-2-Isocephem-4-carboxylic acid derivatives as antibacterial agents. 4,065,623, Cl. 544-105.000.
Belleson, James Garman; and Clark, Kendall, to International Business Machines Corporation. Inspection tool. 4,065,212, Cl. 356-167.000.
Bena, Piero: *See—*
Siletto, Giorgio; Bena, Piero; and Cestari, Bruno, 4,065,121, Cl. 271-174.000.
Bendix Corporation, The: *See—*
Cramer, Robert L.; Dunbar, Jack E.; and Mientus, James A., 4,064,875, Cl. 128-142.200.
Deem, Brian Charles; Markert, Matthew Edward; and Latvala, Bruce Earl, 4,064,973, Cl. 188-71.700.
Ludwig, George C., 4,064,894, Cl. 137-116.500.
Sliwa, Robert A.; and Golden, Edward J., 4,065,709, Cl. 320-1.000.
Benjamin, Thomas A., to IPCO Hospital Supply Corporation. Sterile urine collection device. 4,064,760, Cl. 73-421.00R.
Bennett, Ira Michael. Expandable double walled smoke stack. 4,064,793, Cl. 98-58.000.
Bennett, Walter E., to Fox Valley Corporation. Package for wrapping paper. 4,064,990, Cl. 206-494.000.
Berard, Jean Claude, to Seb S.A. Electrical appliance for heating feeding-bottles and like containers. 4,065,660, Cl. 219-535.000.
Berco Industries: *See—*
Baum, Elliott W., 4,064,815, Cl. 108-129.000.
Berg, Lennart Gustaf. Valve for water pipes. 4,064,906, Cl. 137-529.000.

Bergdahl, Sven Gunnar: *See*—
Aberg, Sven Ulrik Torbjorn; and Bergdahl, Sven Gunnar, 4,065,347, Cl. 162-26.000.
Bergen, Richard F., to Xerox Corporation. Deformation imaging element. 4,065,308, Cl. 96-1.50R.
Berger, Richard M., to American Filtrona Corporation. Method and apparatus for making tobacco smoke filter. 4,064,791, Cl. 93-1.00C.
Bergman, John E.; Keeler, William T.; and McKenna, Patrick J., to Blair Tool and Machine Corporation. Brush roundator. 4,064,658, Cl. 51-110.000.
Bergmann Kabelwerke AG: *See*—
Dahmen, Hans Peter, 4,064,916, Cl. 140-2.000.
Berkelhammer, Gerald; and Asato, Goro, to American Cyanamid Company. Substituted nitroimidazolyl thiadiazoles and oxadiazoles as antibacterial agents and growth promoting compounds. 4,065,567, Cl. 424-272.000.
Berry, James M., to Teletype Corporation. Method and apparatus for generating gray tones in an ink jet printer. 4,065,773, Cl. 346-75.000.
Berry, Thomas Royston, to United Kingdom of Great Britain and Northern Ireland, The Secretary of State for Defence in Her Britannic Majesty's Government of the. Digital scan converters. 4,065,770, Cl. 343-5.0SC.
Bertovich, Matthew G., to Westinghouse Electric Corporation. Escalator having guide wheels and guide track with cooperative non-flat surfaces. 4,064,986, Cl. 198-326.000.
Betherb, Inc.: *See*—
Levine, Beth, 4,064,641, Cl. 36-1.500.
Betz, Erwin C. Non-uniform crimped metal ribbon packed catalyst bed and method using same. 4,065,268, Cl. 23-288.00F.
Beyer, Ernst: *See*—
Anton, Rainer; Beyer, Ernst; and Bielefeld, Bodo, 4,064,982, Cl. 197-1.00R.
Beyerlein, David G.: *See*—
Stewart, John A.; Hynes, Roy G.; Beyerlein, David G.; and Force, John B., 4,065,751, Cl. 340-58.000.
Beyers, Billy Wesley, Jr., to RCA Corporation. Voltage storage circuit useful in television receiver control applications. 4,065,681, Cl. 307-246.000.
Bharucha, Kekhusroo R.; Ajdukovic, Djordje; Pavilanis, Vytautas; and Schrenk, Heinrich Maria, to Canada Packers Limited; and Institute of Microbiology and Hygiene of The University of Montreal, The. Antiviral 5-(substituted benzal) hydantoins. 4,065,570, Cl. 424-273.00R.
Bharucha, Kekhusroo R.; Ajdukovic, Djordje; Pavilanis, Vytautas; and Schrenk, Heinrich Maria, to Canada Packers Limited; and Institute of Microbiology and Hygiene of The University of Montreal, The. Antiviral 5-(substituted benzal) hydantoins. 4,065,571, Cl. 424-273.00R.
Bianchi, John E.; and Nichols, Richard D. E., to Bianchi Leather Products, Inc. Spring assembly for front opening holster. 4,065,039, Cl. 224-2.00B.
Bianchi Leather Products, Inc.: *See*—
Bianchi, John E.; and Nichols, Richard D. E., 4,065,039, Cl. 224-2.00B.
Bianchi, Valerio: *See*—
Latsch, Reinhard; and Bianchi, Valerio, 4,064,846, Cl. 123-32.0EA.
Bielefeld, Bodo: *See*—
Anton, Rainer; Beyer, Ernst; and Bielefeld, Bodo, 4,064,982, Cl. 197-1.00R.
Bien, Hans-Samuel; and Harms, Wolfgang, to Bayer Aktiengesellschaft. Reactive dyestuffs containing urea alkylene linkage between chromophore and reactive radical. 4,065,446, Cl. 260-146.00D.
Biggane, John D., to Super Strut, Inc. Seismic brace. 4,065,218, Cl. 403-71.000.
Billand, William: *See*—
Warner, Richard F.; Billand, William; and Vincent, Riggi, 4,064,644, Cl. 40-152.000.
Billington, Evans R.; and Batka, Robert J., to Rego. Fill limiting filler valve unit. 4,064,907, Cl. 137-614.200.
Bindra, Jasjit Singh: *See*—
Schaaf, Thomas K.; and Bindra, Jasjit Singh, 4,065,472, Cl. 260-332.20C.
Birkelbach, Heinrich: *See*—
Wessendorf, Richard; Sommer, August; and Birkelbach, Heinrich, 4,065,506, Cl. 260-601.00R.
Bison-werke Bahre & Greten GmbH & Co. KG: *See*—
Greten, Berndt, 4,065,030, Cl. 222-55.000.
Padmanathan, Thurairajah, 4,065,477, Cl. 260-369.000.
Bistrick, Eugene J.; Abrahamsson, Axel B.; Szewczyk, Andrew J.; McCabe, Frank A.; Schlaf, Richard A.; and Gabriele, Leonard A., to Lear Siegler, Inc. Pot broach. 4,065,222, Cl. 407-18.000.
Bittner, Klaus-Jurgen: *See*—
Gerigk, Gunter; Bittner, Klaus-Jurgen; and Kostner, Armin, 4,064,673, Cl. 53-3.000.
Bjorklund, William J., to United States of America, Energy Research and Development Administration. Nuclear waste solidification. 4,065,400, Cl. 252-301.10W.
Black, Charles A. Oil drain bag. 4,064,969, Cl. 184-1.500.
Black and Decker Manufacturing Company, The: *See*—
Fleigle, Donald Earl, 4,064,680, Cl. 56-11.900.
Black, Dennis A., to General Motors Corporation. Variable capacity radial-4 compressor. 4,065,229, Cl. 417-270.000.
Blackburn, Bobby J., to IRD Mechanalysis, Inc. Vibration analyzing apparatus. 4,064,704, Cl. 73-660.000.
Blair Tool and Machine Corporation: *See*—
Bergman, John E.; Keeler, William T.; and McKenna, Patrick J., 4,064,658, Cl. 51-110.000.
Blinne, Gerd; and Cordes, Claus, to BASF Aktiengesellschaft. Aromatic polyether-sulfones. 4,065,437, Cl. 260-49.000.
Bloshenko, Vladimir Viktorovich: *See*—
Beizerov, Semen Moiseevich; Vyboischikov, Felix Petrovich; Bloshenko, Vladimir Viktorovich; and Syaskin, Jury Mikhailovich, 4,065,634, Cl. 13-10.000.
BOC International Limited: *See*—
Armond, John Walter, 4,065,272, Cl. 55-25.000.
Bodnar, Alfred D., to General Motors Corporation. Uncoupled strut suspension system. 4,065,152, Cl. 280-668.000.
Bodnaruk, Bohdan J.: *See*—
Aktay, Ali I.; Bodnaruk, Bohdan J.; and Holowaty, Michael O., 4,065,385, Cl. 210-44.000.
Bodor, Nicolae S.; Sloan, Kenneth B.; and Hussain, Anwar A., to INTERx Research Corporation. N-Nicotinoyl-3,4-dinicotinoyloxy-L-phenylalanine and derivatives pharmaceutical compositions and methods containing same. 4,065,566, Cl. 424-266.000.
Boeckman, Maynard A.; and Singer, Richard M., to Kane Manufacturing Corporation. Emergency release for security panels. 4,064,719, Cl. 70-355.000.
Boersma, Richard F., to Fiat-Allis Construction Machinery, Inc. Control lever assembly. 4,064,767, Cl. 74-491.000.
Bofinger, Gunter: *See*—
Hofer, Gerald; Bofinger, Gunter; Nothdurft, Heinz; Khosrawi, Mohammad-Ali; Simon, Helmut; and Konrath, Karl, 4,065,236, Cl. 417-493.000.
Bogel, George F., to Westinghouse Electric Corporation. Solid-state limit switch utilizing infrared link. 4,065,669, Cl. 250-229.000.
Bohm, Eberhard: *See*—
Weckesser, Ernst; Sparwald, Volker; Reh, Lothar; Bohm, Eberhard; and Graf, Rolf, 4,065,271, Cl. 55-2.000.
Bohn, Hans; and Stutzinger, Ferdinand, to Behringwerke Aktiengesellschaft. Pregnancy-specific β_1-glycoprotein and process for isolating it. 4,065,445, Cl. 260-112.00B.
Boldebuck, Edith M.: *See*—
Lupinski, John H.; Boldebuck, Edith M.; and Barnes, Wilson J., 4,065,420, Cl. 260-29.20N.
Bolintineanu, Constantin: *See*—
Dumitrescu, Ioan Florin; Cojocaru, Constantin; and Bolintineanu, Constantin, 4,064,870, Cl. 128-2.00N.
Bolyos, Maria: *See*—
Lorincz, Csaba; Szasz, Kalman; Bolyos, Maria; Jovanovics, Karola; Szporny, Laszlo; Karpati, Egon; and Palosi, Eva, 4,065,458, Cl. 260-293.550.
Bombled, Jean-Paul. Ball mill. 4,065,061, Cl. 241-81.000.
Bond, Andrew. Stringed instruments. 4,064,780, Cl. 84-314.000.
Bongort, Edgar A.; and Cruickshank, William T., to B/W Controls, Inc. Liquid level sensor. 4,064,755, Cl. 73-313.000.
Booz, A. David, to Aluminum Company of America. Metal flake production. 4,065,060, Cl. 241-16.000.
Bordovsky, Jaromir; and Katz, Klaus, to Daimler-Benz Aktiengesellschaft. Control valve for pressure-medium servo-motor. 4,064,789, Cl. 91-417.00R.
Borg-Warner Corporation: *See*—
Myers, Charles Louis; and Rinehart, Michael Kent, 4,065,522, Cl. 260-880.00R.
Borgen, Arden L.; and Merrill, Cleon C., to Arrow-Acme Corporation. Non-siphoning float controlled valve assembly. 4,064,895, Cl. 137-216.000.
Boroschewski, Gerhard; and Arndt, Friedrich, to Schering Aktiengesellschaft. Method for controlling the growth of weeds in a field containing growing plants of cotton. 4,065,293, Cl. 71-100.000.
Boyd, H. Edward; and Freiburger, Thomas M., to Cooper Industries, Inc. Tubing wrench with air powered return. 4,064,772, Cl. 81-57.130.
Bradley, John E., to Ford Motor Company. Starter/blower motor. 4,064,695, Cl. 60-517.000.
Brandenberger, Stanley G.: *See*—
McClure, James D.; and Brandenberger, Stanley G., 4,065,515, Cl. 260-683.680.
Brandenstein, Manfred: *See*—
Ernst, Horst Manfred; Olschewski, Armin; Schurger, Rainer; Walter, Lothar; Brandenstein, Manfred; Burkl, Erich; and Kiener, Heinz, 4,065,193, Cl. 308-233.000.
Brandstrom, Karl Ivar, to AB Bofors. Device for inserting a hot, heavy blank in a die. 4,064,731, Cl. 72-419.000.
Brandt, H. David: *See*—
Goell, James E.; and Brandt, H. David, 4,065,203, Cl. 350-96.00C.
Braniff, Michael J.; and Waller, James L., to General Motors Corporation. Cushion retention for a vehicle seat. 4,065,182, Cl. 297-452.000.
Branson Ultrasonics Corporation: *See*—
Dussault, Jean G. M.; Geckle, Robert A.; and Puskas, William L., 4,064,885, Cl. 134-58.00R.
Bratt, Sven Ake; and Moberg, Carl Ake, to Atlas Copco Aktiebolag. Power wrench. 4,064,948, Cl. 173-12.000.
Bray Oil Co.: *See*—
Dickey, Charles R.; and Voorhees, Vanderveer, 4,065,396, Cl. 252-33.400.
Breads, Eugene H., to Renold Ajax Inc. Coupling for connecting a rotating member to a shaft. 4,064,708, Cl. 64-1.00V.
Brendel, Hugo; and Federau, Heinz, to Metzeler Schaum GmbH. Apparatus for producing sheeting having a fibrous surface. 4,065,245, Cl. 425-503.000.

Brennolt, Otto J.: *See*—
Kolthoff, Clyde Paul, Jr.; and Brennolt, Otto J., 4,064,934, Cl. 165-97.000.
Bridgestone Cycle Co. Ltd.: *See*—
Ohtani, Kiyoshi; and Takamiya, Kikuzo, 4,064,972, Cl. 188-24.000.
Bridon Limited: *See*—
Cawthorne, Stephen, 4,065,221, Cl. 403-284.000.
Brisko, Frank. Pollution control device. 4,064,892, Cl. 137-110.000.
Bristol-Myers Company: *See*—
Belleau, Bernard R.; Doyle, Terrence W.; Luh, Bing Yu; and Conway, Terry T., 4,065,623, Cl. 544-105.000.
Horning, Donald E.; Morris, Leeson R.; and Douglas, James L., 4,065,622, Cl. 544-105.000.
British Petroleum Company Limited, The: *See*—
Gold, Roy Charles, 4,065,675, Cl. 250-576.000.
Broan Manufacturing Co., Inc.: *See*—
Wolbrink, David W.; Budyak, Robert J.; Sellinger, Du Wayne M.; and Kaepernick, William A., 4,064,798, Cl. 100-229.00A.
Brock, Norbert: *See*—
Emig, Peter; Pohle, Hans; Scheffler, Gerhard; Brock, Norbert; Lenke, Hans-Dieter; and Pohl, Jorg, 4,065,501, Cl. 260-570.600.
Brooks, Leslie John, to Rolls-Royce Limited. Attachment for attaching jet propulsion engines to fixed structure. 4,065,077, Cl. 244-54.000.
Brossi, Arnold; Pecherer, Benjamin; and Sunbury, Robert, to Hoffmann-La Roche Inc. Intermediates in the preparation of 2,3,4,5-tetrahydro-1H-3-benzazepines. 4,065,473, Cl. 260-340.50R.
Brouwer, Hendrik Willem, to Lever Brothers Company. Liquid soap composition. 4,065,398, Cl. 252-108.000.
Brown, Alberta Mae. Stethoscope. 4,064,965, Cl. 181-131.000.
Brown, David L.: *See*—
McClure, William F.; and Brown, David L., 4,064,944, Cl. 169-60.000.
Brown, John T.; and Morgan, David W., to Corning Glass Works. Electrical resistor and method of production. 4,065,656, Cl. 219-121.0LM.
Bruns, Donald George: *See*—
Arrasmith, Fred Victor; Bruns, Donald George; Moffitt, John Stuart; and Moss, Stanton Kline, 4,065,123, Cl. 271-215.000.
Brunswick Corporation: *See*—
Draxler, James Richard, 4,064,823, Cl. 115-17.000.
Roberts, John A.; and Roberts, Peter R., 4,065,046, Cl. 228-156.000.
Buckle, Derek Richard; Cantello, Barrie Christian Charles; and Smith, Harry, to Beecham Group Limited. 4-Hydroxy-3-nitro-carbostyril compounds. 4,065,457, Cl. 260-289.00K.
Budyak, Robert J.: *See*—
Wolbrink, David W.; Budyak, Robert J.; Sellinger, Du Wayne M.; and Kaepernick, William A., 4,064,798, Cl. 100-229.00A.
Bugaut, Andree: *See*—
Andrillon, Patrick; and Bugaut, Andree, 4,065,255, Cl. 8-10.200.
Buhler, Arthur; Fasciati, Alfred; and Schlumpf, Karl, to Ciba-Geigy Corporation. Process for dyeing and printing. 4,065,254, Cl. 8-1.00C.
Builders Brass Works: *See*—
Bejarano, Thomas M.; Schmidt, Herbert; and Schmidt, Joseph J., 4,064,589, Cl. 16-53.000.
Bullock, Norman J., to W. M. Cissell Manufacturing Company. Laundry dryer. 4,065,253, Cl. 432-105.000.
Bunker Ramo Corporation: *See*—
Patten, Hudson Taylor; and Woodcock, Floyd Baylie, 4,065,747, Cl. 340-5.00R.
Bureau BBR Ltd.: *See*—
Siegwart, Hans-Rudolf; and Kaser, Rene, 4,065,098, Cl. 254-29.00A.
Burkl, Erich: *See*—
Ernst, Horst Manfred; Olschewski, Armin; Schurger, Rainer; Walter, Lothar; Brandenstein, Manfred; Burkl, Erich; and Kiener, Heinz, 4,065,193, Cl. 308-233.000.
Burmark, Robert C.: *See*—
Allyn, Charles L.; Manlove, James C.; Chang, Gerald M.; and Burmark, Robert C., 4,065,421, Cl. 260-29.40R.
Burroughs Corporation: *See*—
Panigrahi, Godavarish, 4,065,756, Cl. 365-49.000.
Burstein, Albert H.; and Koslin, Bertram L., to Sampson Corporation, The. Prosthesis-to-bone interface system. 4,064,567, Cl. 3-1.910.
Burton, Clyde L.: *See*—
Tennes, Bernard R.; and Burton, Clyde L., 4,064,683, Cl. 56-328.0TS.
Burton, George William, to Johnsen & Jorgensen (Plastics) Limited. Safety container and closure. 4,065,017, Cl. 215-211.000.
Burton, Parsons and Company, Inc.: *See*—
Rankin, Billy F., 4,065,324, Cl. 134-30.000.
Burton, William D. Loudspeaker apparatus. 4,064,966, Cl. 181-144.000.
Busdiecker, Wayne Scott; and Seymour, Harold Henry, to Parker-Hannifin Corporation. Flexible reinforced hose and method of making the same. 4,064,913, Cl. 138-125.000.
Bushev, Vladimir Semenovich: *See*—
Evkin, Ivan Frolovich; Petrov, Vladimir Alexandrovich; Olevsky, Viktor Markovich; Ruchinsky, Vitaly Rafael-Abovich; Bushev, Vladimir Semenovich; and Tatyanchikov, Valentin Alexeevich, 4,065,346, Cl. 159-6.00R.
Bussell, George W.; and Kisel, Martin W., to Inmont Corporation. Process for the preparation of non-aqueous dispersion coatings. 4,065,425, Cl. 260-33.6EP.
Bustos, Rafael T. Display rack. 4,064,995, Cl. 211-187.000.
Butler, Walter J.; and Eichelberger, Charles W., to General Electric Company. Analog-to-digital converter. 4,065,766, Cl. 340-347.0AD.
Buyssens, Noel; and Verbauwhede, Germain, to N.V. Bekaert S.A. Reinforcement of resilient articles. 4,064,915, Cl. 139-425.00R.
Byrne, Robert Edward, to Research-Cottrell. Production of amber glass. 4,065,281, Cl. 65-19.000.
C. Conradty Nurnberg GmbH & Co. KG: *See*—
Zollner, Christine; Thiele, Gerhard; Zollner, Dieter; and Koziol, Konrad, 4,065,377, Cl. 204-290.00F.
C. J. Wennberg AB: *See*—
Asp, Hans Eskil, 4,064,884, Cl. 134-15.000.
C.M.W. Laboratories Limited: *See*—
Killick, Herbert Percy, 4,064,630, Cl. 32-22.000.
Cabofina S. A.: *See*—
Verborgt, Jozef, 4,065,438, Cl. 260-75.00R.
Cadwalader, Louise G. Ski seat. 4,065,140, Cl. 280-11.37E.
Cahill, Sutton & Thomas: *See*—
Calderone, Joseph F., 4,064,573, Cl. 4-227.000.
Cainaud, Henri, to Societe des Establissements Hugonnet. Cistern container. 4,065,022, Cl. 220-71.000.
Calderone, Joseph F., to Cahill, Sutton & Thomas. Cleanser-sanitizer and timed cycle deodorizing spray attachment for toilets. 4,064,573, Cl. 4-227.000.
Caldwell, Harold B., to Whiting Corporation. Apparatus for manufacturing phosphoric acid. 4,065,266, Cl. 23-259.200.
California Institute of Technology: *See*—
Gover, Avraham; Samid, Ilan; and Lee, Chien-Ping, 4,065,729, Cl. 331-94.50H.
California Strolee, Inc.: *See*—
Hyde, Richard E.; and Carmichael, Lee T., 4,065,177, Cl. 297-327.000.
Callahan, James L.: *See*—
Hardman, Harley F.; Callahan, James L.; and Grasselli, Robert K., 4,065,507, Cl. 260-604.00R.
Callan, John E., to Cities Service Company. Gun-type dispenser for heat softenable adhesive or sealant compounds. 4,065,034, Cl. 222-146.0HE.
Campbell, Gordon M. Water well monitor. 4,065,226, Cl. 417-40.000.
Campbell, Harry E. Artificial polycentric knee joint. 4,064,569, Cl. 3-26.000.
Campbell, Robert H.; and Wise, Raleigh W., to Monsanto Company. Vulcanization of rubber with phosphinothioyl amino sulfides. 4,065,443, Cl. 260-79.50B.
Canada, Her Majesty the Queen in Right of, as represented by the Minister of National Defence: *See*—
Hutchison, Thomas Sherret; and McBride, Stuart Livingstone, 4,064,735, Cl. 73-1.00R.
Canada Packers Limited: *See*—
Bharucha, Kekhusroo R.; Ajdukovic, Djordje; Pavilanis, Vytautas; and Schrenk, Heinrich Maria, 4,065,570, Cl. 424-273.00R.
Bharucha, Kekhusroo R.; Ajdukovic, Djordje; Pavilanis, Vytautas; and Schrenk, Heinrich Maria, 4,065,571, Cl. 424-273.00R.
Khouw, Boen Tie; and Kesler, Johan Peter, 4,065,355, Cl. 195-66.00R.
Canadian Patents and Development Limited: *See*—
Dyck, George J., 4,064,955, Cl. 177-134.000.
Wong, James Y.; Kashyap, Satish C.; and Dunn, John G., 4,065,655, Cl. 219-10.55D.
Canon Kabushiki Kaisha: *See*—
Houryu, Sakae, 4,065,764, Cl. 340-324.00M.
Mikada, Hiroyuki; and Kishimoto, Jyuji, 4,065,803, Cl. 361-88.000.
Miura, Genmei; and Takeshita, Kanou, 4,065,754, Cl. 340-166.00R.
Cantello, Barrie Christian Charles: *See*—
Buckle, Derek Richard; Cantello, Barrie Christian Charles; and Smith, Harry, 4,065,457, Cl. 260-289.00K.
Capano, Patrick John: *See*—
Baron, William James; and Capano, Patrick John, 4,065,316, Cl. 106-20.000.
Caplan, Sandor, to Ashley-Butler, Inc. Temperature measuring device of a liquid crystal laminate. 4,064,872, Cl. 128-2.00H.
Cappel, Fred; Hastik, Walter; Fleming, Georges; and Hofmann, Pierre, to Dravo Corporation. Sinter machine control as a function of waste gas temperature. 4,065,295, Cl. 75-5.000.
Carella, Richard F.; and Perry, Thomas W., to General Motors Corporation. Easy enter seat assembly. 4,065,178, Cl. 297-341.000.
Cares, William R., to Petro-Tex Chemical Corporation. Iso-C_4 compound reactions with perfluorosulfonic acid resin catalysts. 4,065,512, Cl. 260-641.000.
Carl Schenck AG, Firma: *See*—
Giers, Alfred; Holdinghausen, Paul; Schneider, Hatto; and Widmann, Friedman, 4,064,761, Cl. 73-462.000.
Carlo Erba, S. p. A.: *See*—
Doria, Gianfederico; Giraldi, PierNicola; Lauria, Francesco; Corno, Maria Luisa; Sberze, Piero; and Tibolla, Marcello, 4,065,467, Cl. 260-345.200.
Carlson, Guy C., Jr.: *See*—
Haak, Willard Q.; and Carlson, Guy C., Jr., 4,064,790, Cl. 91-492.000.
Carmichael, Lee T.: *See*—
Hyde, Richard E.; and Carmichael, Lee T., 4,065,177, Cl. 297-327.000.
Caron, Marshall J., to Florida Machine of Boca Raton. Filter system for swimming pool cleaning machines. 4,064,586, Cl. 15-1.700.
Carr, Thomas W.: *See*—
Mang, Raymond L.; and Carr, Thomas W., 4,065,284, Cl. 65-114.000.
Carrier Corporation: *See*—
Miller, William H., Jr.; and Geary, Carl H., 4,065,136, Cl. 277-3.000.

Ratledge, Houston, 4,065,008, Cl. 214-83.300.
Schanzenbach, George P., Jr.; and Mizikar, David M., 4,064,764, Cl. 74-2.000.
Carson Industries, Inc.: *See—*
Carson, John Reese, 4,065,020, Cl. 220-18.000.
Carson, John Reese, to Carson Industries, Inc. Meter box having rotatable cover and interlocking means. 4,065,020, Cl. 220-18.000.
Carter, Duane L. Supporting pier with tie-down. 4,064,668, Cl. 52-295.000.
Carter, Everett M.; and Quain, Wilbur C., to Lake Center Industries. Pressure sensitive matrix switch having apertured spacer with flexible double sided adhesive intermediate and channels optionally interposed between apertures. 4,065,649, Cl. 200-5.00A.
Cary, Charles C., to Roll-Out Insulation Systems, Inc. Weather responsive insulation system for greenhouses and the like. 4,064,648, Cl. 47-17.000.
Casey, Donald James, to American Cyanamid Company. Chitin derived surgical glove powder. 4,064,564, Cl. 2-168.000.
Casio Computer Co., Ltd.: *See—*
Kashio, Toshio, 4,064,687, Cl. 58-4.00A.
Casson, William Ernest, to McMurdo Instrument Company Limited, The. Electric reserve batteries. 4,065,606, Cl. 429-198.000.
Castle, William Harold; Crowe, William Ray; and Herriford, James Lester, to International Business Machines Corporation. Selectable dual ratchet feed for a printer platen. 4,064,985, Cl. 197-114.00R.
Caterpillar Tractor Co.: *See—*
Amdall, John K.; and Simmons, Gerald P., 4,064,769, Cl. 74-878.000.
Cole, Carroll Richard, 4,064,947, Cl. 172-781.000.
Haak, Willard Q.; and Carlson, Guy C., Jr., 4,064,790, Cl. 91-492.000.
McMillan, William D., 4,065,228, Cl. 417-212.000.
Ostrowski, Richard C., 4,064,927, Cl. 164-244.000.
Rinaldo, James D., 4,064,766, Cl. 74-473.00R.
Stedman, Robert N.; and Simmons, Gerald P., 4,064,959, Cl. 180-139.000.
Catlett, John C., to Kelley Company, Inc. Traffic door. 4,064,924, Cl. 160-354.000.
Cavin, Daniel C., to Shell Oil Company. Plugging permeable earth formation with wax. 4,064,943, Cl. 166–281.
Cawthorne, Stephen, to Bridon Limited. Clamp for sheathed rod, strand or rope. 4,065,221, Cl. 403-284.000.
CBS Inc.: *See—*
Meshulam, Avram; and Rebold, Jerome I., 4,064,626, Cl. 30-287.000.
Rossi, John P., 4,065,784, Cl. 358-13.000.
Cecere, Francesco; Galli, Giuliano; Della Penna, Gino; and Rappuoli, Bruno, to Snamprogetti, S.p.A. Method for the preparation of D-carbamyl aminoacids and the corresponding D-aminoacids. 4,065,353, Cl. 195-2.000.
Central Glass Company, Limited: *See—*
Chujo, Yoshimasa; and Kandachi, Takayoshi, 4,064,832, Cl. 118-323.000.
Centre de Recherches Metallurgiques-Centrum voor Research in de Metallurgie: *See—*
Paulus, Philippe; and Economopoulos, Mario, 4,065,329, Cl. 148-18.000.
Centre Electronique Horloger S.A.: *See—*
Hermann, Jean; and Choffat, Hubert, 4,065,684, Cl. 310-351.000.
Centrul de Protectia si Igiena Muncii: *See—*
Dumitrescu, Ioan Florin; Cojocaru, Constantin; and Bolintineanu, Constantin, 4,064,870, Cl. 128-2.00N.
Cestari, Bruno: *See—*
Siletto, Giorgio; Bena, Piero; and Cestari, Bruno, 4,065,121, Cl. 271-174.000.
Chadwick, Ronald M.; and Shearlock, David A., to National Steel Corporation. Method and apparatus for resealing the large bell rod in a double bell charging system for a blast furnace. 4,065,004, Cl. 214-36.000.
Chambers, Alan B.: *See—*
Vykukal, Hubert C.; Chambers, Alan B.; and St. John, Roy H., 4,064,642, Cl. 36-92.000.
Chambers, Carter Carl. Wheeled vehicle for semi-ambulatory medical patients. 4,065,145, Cl. 280-87.02R.
Chan, Peter, to Raymond Lee Organization, Inc., The, a part interest. Multipurpose game apparatus. 4,065,125, Cl. 273-5.00R.
Chang, Gerald M.: *See—*
Allyn, Charles L.; Manlove, James C.; Chang, Gerald M.; and Burmark, Robert C., 4,065,421, Cl. 260-29.40R.
Chastain, Edward L.: *See—*
Gustafson, Kenneth C.; and Chastain, Edward L., 4,065,538, Cl. 264-154.000.
Cheadle, Brian A., to Atomic Energy of Canada Limited. High strength Sn-Mo-Nb-Zr alloy tubes and method of making same. 4,065,328, Cl. 148-12.70B.
Chemetron Corporation: *See—*
Moore. Donald G., 4,065,654, Cl. 219-10.55F.
Chernock, Stephen Peter. Valve assembly. 4,065,029, Cl. 222-3.000.
Chesnutt, Gary A., to Ashland Oil, Inc. Apparatus for producing carbon black. 4,065,265, Cl. 23-259.500.
Chevron Research Company: *See—*
Kobzina, John W., 4,065,291, Cl. 71-95.000.
Lavigne, Joe B., 4,065,424, Cl. 260-31.8DB.
Chimkombinat: *See—*
Sendov, Stoyan Hristov; Nikolov, Ivan Angelov; Kuklin, Ivan Alexandrov; and Mirchev, Mircho Georgiev, 4,065,393, Cl. 210-377.000.
Chinoin Gyogyszer es Vegyeszeti Termekek Gyara Rt.: *See—*
Pfliegel, Todor; Seres, Jeno; Gajary, Antal; Daroczy nee Csuka, Klara; and Nagy, Lajos T., 4,065,491, Cl. 260-502.500.
Chizhikov, Anatoly Petrovich: *See—*
Alexandrov, Adolf Moritsovich; Aglitsky, Vladimir Efimovich; Tsimbler, Jury Abramovich; Lurie, Mikhail Vladimirovich; Topolyansky, Jury Arnoldovich; Kantor, Ilya Solomonovich; Chizhikov, Anatoly Petrovich; and Gun, Dmitry Rudolfovich, 4,065,076, Cl. 243-38.000.
Choffat, Hubert: *See—*
Hermann, Jean; and Choffat, Hubert, 4,065,684, Cl. 310-351.000.
Chomerics, Inc.: *See—*
Kuist, Charles H.; Squitieri, Vincent; and Seeger, Richard E., 4,065,197, Cl. 339-17.00M.
CHON Corporation: *See—*
Oppolzer, Wolfgang, 4,065,496, Cl. 260-561.00R.
Chou, Chih H.; and Myers, Gordon S., to American Home Products Corporation. Process for preparing 1,4:3,6-dianhydro-D-glucitol 2-nitrate. 4,065,488, Cl. 260-467.000.
Christenson, Roger M.; and Evjen, Clarence E., to PPG Industries, Inc. Water-based coatings with improved sagging and popping characteristics. 4,065,415, Cl. 260-17.4SG.
Christenson, Roger M.; and Evjen, Clarence E., to PPG Industries, Inc. Water-based coatings with reduced solvent or water popping and sagging. 4,065,416, Cl. 260-17.4SG.
Chromy, Franz, to Hilti Aktiengesellschaft. Electropneumatic hammer. 4,064,949, Cl. 173-14.000.
Chujo, Yoshimasa; and Kandachi, Takayoshi, to Central Glass Company, Limited. Apparatus for fabricating heat-reflecting glass. 4,064,832, Cl. 118-323.000.
Chun, Ho-ming: *See—*
Lundmark, Larry D.; Melby, Allan; and Chun, Ho-ming, 4,065,422, Cl. 260-29.60E.
Ciba-Geigy AG: *See—*
Muller, Willy, 4,065,448, Cl. 260-176.000.
Seha, Zdenek, 4,065,478, Cl. 260-382.000.
Stanfield, Zenas Allen, 4,064,638, Cl. 34-174.000.
Ciba-Geigy Corporation: *See—*
Buhler, Arthur; Fasciati, Alfred; and Schlumpf, Karl, 4,065,254, Cl. 8-1.00C.
Coe, Gervase; and Lee, Frank, 4,065,257, Cl. 8-74.000.
Cseh, Georg, 4,065,449, Cl. 260-176.000.
Frey, Christoph; and von der Crone, Jost, 4,065,462, Cl. 260-299.000.
Karrer, Friedrich, 4,065,508, Cl. 260-613.00R.
L'Eplattenier, Francois; and Vuitel, Laurent, 4,065,481, Cl. 260-438.100.
Muller, Albrecht; Haug, Theobald; and Renner, Alfred, 4,065,433, Cl. 260-47.0UA.
Cincinnati Electronics Corporation: *See—*
Petersen, Virgil F.; and Skirvin, Willard L., 4,064,898, Cl. 137-240.000.
Cities Service Company: *See—*
Barker, James E., 4,065,294, Cl. 75-3.000.
Callan, John E., 4,065,034, Cl. 222-146.0HE.
Satterwhite, William A.; Leach, Robert M.; and Stuhler, Harold A., 4,065,402, Cl. 252-358.000.
Satterwhite, William A.; Leach, Robert M.; and Stuhler, Harold A., 4,065,403, Cl. 252-358.000.
Satterwhite, William A.; Leach, Robert M.; and Stuhler, Harold A., 4,065,404, Cl. 252-358.000.
Citizen Watch Co., Ltd.: *See—*
Yasuda, Tetsuya; Iinuma, Yoshio; Maekawa, Yuzo; Kato, Toshikiyo; and Yoshida, Masaru, 4,064,689, Cl. 58-50.00R.
Clark Equipment Company: *See—*
Doolittle, Mac R., 4,064,967, Cl. 180-155.000.
Rocco, Jack O., 4,065,012, Cl. 214-510.000.
Clark, Kendall: *See—*
Belleson, James Garman; and Clark, Kendall, 4,065,212, Cl. 356-167.000.
Clark, Trevor Percival. Freeze/thaw indicator. 4,064,828, Cl. 116-114.500.
Clarke, Geoffrey, to Square D Company. Circuitry for industrial logic systems. 4,065,683, Cl. 307-264.000.
Clay, Clifton. Fur and hides in the fine arts. 4,065,334, Cl. 156-68.000.
Coast Catamaran Corporation: *See—*
Alter, Hobart L.; and Hutchinson, Peter L. V., 4,065,337, Cl. 156-78.000.
Coe, Gervase; and Lee, Frank, to Ciba-Geigy Corporation. Inhibition of dye staining during laundering of textile materials. 4,065,257, Cl. 8-74.000.
Cohen, Harvey M.: *See—*
Megowen, William J.; and Cohen, Harvey M., 4,065,018, Cl. 215-231.000.
Cohnen, Wolfgang; and Apel, Gerhard, to Bayer Aktiengesellschaft. Blowing agent mixture. 4,065,401, Cl. 252-350.000.
Coibion, Jean, to Saft-Societe des Accumulateurs Fixes et de Traction. Rack for a storage battery. 4,065,603, Cl. 429-99.000.
Cojocaru, Constantin: *See—*
Dumitrescu, Ioan Florin; Cojocaru, Constantin; and Bolintineanu, Constantin, 4,064,870, Cl. 128-2.00N.

Cole, Carroll Richard, to Caterpillar Tractor Co. Draw bar for a motor grader. 4,064,947, Cl. 172-781.000.
Cole, Clinie E., to Phillips Petroleum Company. Carbon black pelleter with even pin distribution. 4,065,240, Cl. 425-222.000.
Collins, Jr.; Watson R.; and Kokinda, James J., to Air Products and Chemicals, Inc. Pressure regulator and safety relief valve. 4,064,890, Cl. 137-73.000.
Collins, Kenneth L., to Gulf Oil Corporation. Shear sub for drill string. 4,064,953, Cl. 175-321.000.
Combi Co., Ltd.: *See—*
Nakao, Shinroku, 4,065,086, Cl. 248-188.600.
Commanda, Ephrem. Foldable picnic table. 4,064,812, Cl. 108-36.000.
Commissariat a l'Energie Atomique: *See—*
Barbier, Daniel; Ittel, Jean-Michel; and Poujois, Robert, 4,065,758, Cl. 340-227.00R.
Conklin, Hale, to Divajex. Method of making a wall section for a thermal enclosure. 4,065,336, Cl. 156-69.000.
Connizzoli, Mario; Peviani, Camillo; and Maietti, Francesca. Apparatus for pre-freezing substances of products intended to be pre-freezed. 4,064,707, Cl. 62-374.000.
Container Corporation of America: *See—*
Pilz, William M., III, 4,065,048, Cl. 229-43.000.
Continental Oil Company: *See—*
Sparlin, Derry D., 4,064,940, Cl. 166-295.000.
Waters, Kenneth H.; and Rice, George W., 4,065,749, Cl. 340-15.5MC.
Contractor, Rashmikant Maganlal; Dodson, William Carter, Jr.; Hentges, James John; and Seppala, Earl Edwin, to Du Pont de Nemours, E. I., and Company. Prevention of fibers from entering the pinch point between a rotating feed roll and a stationary shoe. 4,064,597, Cl. 19-156.300.
Conway, Terry T.: *See—*
Belleau, Bernard R.; Doyle, Terrence W.; Luh, Bing Yu; and Conway, Terry T., 4,065,623, Cl. 544-105.000.
Cook, Harriet J.: *See—*
Yamazaki, Toshio; Cook, Harriet J.; and Lipson, Melvin A., 4,065,315, Cl. 96-48.0QP.
Cook, William B., Jr., to Santa Fe International Corporation. Scaffold for working on a pipeline movable relative to a base. 4,064,968, Cl. 182-13.000.
Cooper Industries, Inc.: *See—*
Boyd, H. Edward; and Freiburger, Thomas M., 4,064,772, Cl. 81-57.130.
Cooper, Jack B. Tile grout-cleaning tool. 4,064,588, Cl. 15-236.00R.
Copeland, Donald R. Quick disconnect anchor. 4,064,811, Cl. 105-476.000.
Cordes, Claus: *See—*
Blinne, Gerd; and Cordes, Claus, 4,065,437, Cl. 260-49.000.
Cormany, Charles L., to PPG Industries, Inc. Degreasing process using stabilized methylchloroform solvent. 4,065,323, Cl. 134-10.000.
Cornell Research Foundation, Inc.: *See—*
Ballantyne, Joseph M., 4,065,780, Cl. 357-6.000.
Corning Glass Works: *See—*
Brown, John T.; and Morgan, David W., 4,065,656, Cl. 219-121.0LM.
Herczog, Andrew, 4,065,636, Cl. 174-52.00S.
Corno, Maria Luisa: *See—*
Doria, Gianfederico; Giraldi, PierNicola; Lauria, Francesco; Corno, Maria Luisa; Sberze, Piero; and Tibolla, Marcello, 4,065,467, Cl. 260-345.200.
Corporate Brands, Inc.: *See—*
Flanagan, John J., 4,065,409, Cl. 252-528.000.
Costa, Giovanni Giacomo. Method of detecting malignant neoplasms. 4,065,552, Cl. 424-1.000.
Cowen, Lloyd G. Numerical combination replacement plug for cylinder locks. 4,064,718, Cl. 70-302.000.
Cramer, Clark Evans; Gaetjen, John Richard; Grant, Carl Henry; Nelson, Paul Eugene; and Newlin, Frank Allen, III, to International Business Machines Corporation. Data transfer system. 4,065,810, Cl. 364-200.000.
Cramer, Robert L.; Dunbar, Jack E.; and Mientus, James A., to Bendix Corporation, The. Anti-suffocation means for aircraft breathing mask. 4,064,875, Cl. 128-142.200.
Crane, Edward J., to Barker International, Inc. Apparatus for processing poultry. 4,064,596, Cl. 17-11.10R.
Crankshaw, John H., to Dynetics, Inc. Synchronizing clutch. 4,064,979, Cl. 192-53.00F.
Cremer, Rene: *See—*
Dujardin, Esther; Kuiper, Ysbrand; Cremer, Rene; and Sironval, Cyrille, 4,065,310, Cl. 96-27.00R.
Creusot-Loire: *See—*
Leroy, Pierre; and Sprunck, Emile, 4,065,159, Cl. 285-136.000.
Croft, Edward F. B.; and Lane, John J., to Associated Electrical Industries Limited. Furnaces. 4,065,251, Cl. 432-59.000.
Crosby, Edward Lewis, Jr., to RCA Corporation. Apparatus and method for measuring permeability. 4,064,740, Cl. 73-38.000.
Crounse, Nathan N.: *See—*
Jefferies, Patrick J.; and Crounse, Nathan N., 4,065,500, Cl. 260-567.60M.
Crouse, Dennis N.: *See—*
Ajami, Alfred M.; Walsh, Fraser M.; and Crouse, Dennis N., 4,065,601, Cl. 429-50.000.
Crowe, William Ray: *See—*
Castle, William Harold; Crowe, William Ray; and Herriford, James Lester, 4,064,985, Cl. 197-114.00R.
Crown Cork & Seal Company, Inc.: *See—*
Eissler, John C., 4,065,035, Cl. 222-153.000.
Potts, Vinson S., 4,065,025, Cl. 220-258.000.
Cruickshank, William T.: *See—*
Bongort, Edgar A.; and Cruickshank, William T., 4,064,755, Cl. 73-313.000.
Cseh, Georg, to Ciba-Geigy Corporation. Tetrachloro substituted disazo pigments. 4,065,449, Cl. 260-176.000.
Cser, Gyula, to Autoipari Kutato Intezet. Live-gas conduit system for turbocharged six-cylinder engines. 4,064,696, Cl. 60-598.000.
Cub, Fritz, to Robert Bosch GmbH. Method of making a liquid filter. 4,065,341, Cl. 156-187.000.
Cummings, Thomas R.; and Mazza, Anthony J., Jr., to Singer Company, The. Four-point ground reaction for skid equipped helicopters. 4,064,640, Cl. 35-12.00K.
Cunningham, James Thomas; Snow, Frederick Orren, III; April, Joseph Richard; and Yu, A. Tobey, to Orba Corporation. Pocket door ship loader. 4,065,002, Cl. 214-14.000.
Currey, Thomas A. Ophthalmoscope. 4,065,208, Cl. 351-6.000.
Cvetko, Henry J.; and Kuykendall, John L., to Astatic Corporation, The. Needle assemblies for phonograph pickup cartridges. 4,065,134, Cl. 274-37.000.
Cvetko, Henry J.; and Peterson, Donald W., to Astatic Corporation, The. Microphone screen. 4,065,648, Cl. 179-178.000.
Czinger, David B., to Beach Manufacturing Corporation. Printing saddle with rocker arm lockup. 4,064,803, Cl. 101-415.100.
Dague, Leonard P.: *See—*
Hou, Shou L.; Dague, Leonard P.; and Agrawal, Arun K., 4,065,775, Cl. 346-140.00R.
Dahl, Erik Qvale, to Elkem-Spigerverket A/S. Method of recovering fluorine from carbonaceous waste material. 4,065,551, Cl. 423-483.000.
Dahlberg, Stig Erland; and Gellerstedt, Nils Goran Axel, to AB Bofors. Device for pyrotechnical illuminating charge. 4,064,805, Cl. 102-35.000.
Dahlem, Francis E., to American Air Filter Company, Inc. Inlet for cyclone-type particulate matter gas separator device. 4,065,277, Cl. 55-418.000.
Dahmen, Hans Peter, to Bergmann Kabelwerke AG. Arrangement for intermittent feeding of cable coils arresting on a distribution conveyor. 4,064,916, Cl. 140-2.000.
Daimler-Benz Aktiengesellschaft: *See—*
Augustin, Ulrich, 4,064,856, Cl. 123-140.00R.
Bordovsky, Jaromir; and Katz, Klaus, 4,064,789, Cl. 91-417.00R.
Fabian, Frank-Dietrich; and Leucht, Rainer, 4,065,170, Cl. 296-37.100.
Pabst, Rolf; and Jenz, Siegfried, 4,064,848, Cl. 123-41.540.
Danfoss A/S: *See—*
Gosling, Alexander Benett; and Mealing, Barrie Ewart, 4,065,706, Cl. 318-254.000.
D'Angelo, Raymond W. Mounting rack for circuit panels. 4,065,200, Cl. 339-65.000.
Daroczy nee Csuka, Klara: *See—*
Pfliegel, Todor; Seres, Jeno; Gajary, Antal; Daroczy nee Csuka, Klara; and Nagy, Lajos T., 4,065,491, Cl. 260-502.500.
Darringer, Richard E.; and Wrighton, Robert J., to Telatemp Corporation. Temperature indicating device. 4,064,827, Cl. 116-114.00Y.
Dart Industries, Inc.: *See—*
Kiss, Kornel D., 4,065,635, Cl. 174-23.00R.
Dash, Arthur: *See—*
Warner, Richard F.; Billand, William; and Vincent, Riggi, 4,064,644, Cl. 40-152.000.
Daum, Dennis: *See—*
Daum, Emill F.; Daum, Terry R.; and Daum, Dennis, 4,065,214, Cl. 401-2.000.
Daum, Emill F.; Daum, Terry R.; and Daum, Dennis. Portable wax applicator and remover. 4,065,214, Cl. 401-2.000.
Daum, Terry R.: *See—*
Daum, Emill F.; Daum, Terry R.; and Daum, Dennis, 4,065,214, Cl. 401-2.000.
Davis, Chester. Recording sheet for forming intensely colored iridescent indicia. 4,065,158, Cl. 282-27.500.
Davis, Dan Bryan, to Northern Telecom Limited. Mounting of a measuring head for positioning relative to a structure. 4,064,634, Cl. 33-147.00L.
Dayton-Walther Corporation: *See—*
Walther, William D., 4,065,186, Cl. 301-12.00R.
DDSA Pharmaceuticals Limited: *See—*
Shenoy, Umakant Devdas, 4,065,474, Cl. 260-347.700.
De Beukelaar, Jan W.; Van Zwet, Henry; and Roest, Jacob B., to Shell Oil Company. Treatment of contaminated hydrocarbon from olefin polymerization. 4,065,610, Cl. 526-70.000.
De Cosimo, Michael J. Complete system for a home air heating and cooling, hot and cold water, and electric power. 4,065,055, Cl. 237-12.100.
Deem, Brian Charles; Markert, Matthew Edward; and Latvala, Bruce Earl, to Bendix Corporation, The. Actuating and adjusting mechanism for disc brakes. 4,064,973, Cl. 188-71.700.
Deets, Gary L., to Monsanto Company. Polymethylmethacrylate based molding compositions. 4,065,428, Cl. 260-45.75B.
Defares, Peter Bernard; van der Schaar, Wouter Wies; and Verveen, Eduard Theodorus. Apparatus for regulating the breathing pattern. 4,064,869, Cl. 128-2.00R.
Dehart, Scott Alan, to Hewlett-Packard Company. Digital data decoder. 4,065,796, Cl. 360-51.000.
Deisenroth, Norbert F.; Nordhaus, John P.; and Siegelman, Abe, to

Elematic Instrument Corporation. Flowmeter. 4,064,751, Cl. 73-207.000.
Delaney, Edward A.; Pinkowski, Norman J.; and Nudenberg, Walter, to Uniroyal, Inc. Graft copolymer on butadiene-piperylene elastomer. 4,065,444, Cl. 260-880.00R.
Delignieres, Robert, to Institut Francais du Petrole. Doppler navigation method for determining the distance travelled by a vehicle. 4,065,744, Cl. 340-3.00D.
Della Penna, Gino: *See—*
Cecere, Francesco; Galli, Giuliano; Della Penna, Gino; and Rappuoli, Bruno, 4,065,353, Cl. 195-2.000.
Del Pino, Fernando: *See—*
Steinstrasser, Rolf; and Del Pino, Fernando, 4,065,489, Cl. 560-59.000.
Delta and Pine Land Company of Mississippi: *See—*
Downing, James D., 4,064,636, Cl. 34-60.000.
Delzenne, Gerard Albert: *See—*
Laridon, Urbain Leopold; Delzenne, Gerard Albert; Mader, Helmut; Ulrich, Hans; and Seidel, Bernhard, 4,065,524, Cl. 260-895.000.
DeMajistre, Robert: *See—*
Prucnal, Paul J.; and DeMajistre, Robert, 4,065,624, Cl. 428-522.000.
den Broeder, Steven E.: *See—*
Soonawala, Homi D.; and den Broeder, Steven E., 4,065,379, Cl. 208-67.000.
Denny, George H.; and Saari, Walfred S., to Merck & Co., Inc. Process for the preparation of substituted trichloroacetamidine derivatives. 4,065,464, Cl. 260-326.150.
Denny, George H., to Merck & Co., Inc. Process for the preparation of substituted trichloroacetamidine derivatives. 4,065,465, Cl. 260-326.150.
de Nora, Vittorio, to Oronzio de Nora Impianti Elettrochimici, S.p.A. Method of operating an electrolysis cell. 4,065,367, Cl. 204-98.000.
Denzer, Richard E., to General Motors Corporation. Cambering device for cambering vehicle. 4,065,146, Cl. 280-278.000.
Depew, Walter L. Solar actuated boiler and appurtenances. 4,064,865, Cl. 126-271.000.
Derrick, H. William, Jr., to Derrick Manufacturing Corporation. Multiple screen apparatus. 4,065,382, Cl. 209-313.000.
Derrick Manufacturing Corporation: *See—*
Derrick, H. William, Jr., 4,065,382, Cl. 209-313.000.
Design & Funding, Inc.: *See—*
Simms, John E., 4,064,613, Cl. 29-407.000.
Desmarais, Armand Joseph, to Hercules Incorporated. Tile cements. 4,065,319, Cl. 106-93.000.
Detroit, William John; and Sanford, Michael Elliot, to American Can Company. Well cementing. 4,065,318, Cl. 106-90.000.
Deutsche Gold- und Silber-Scheideanstalt Vormals Roessler: *See—*
Schreyer, Gerd; Tanner, Herbert; Weigert, Wolfgang; and Gora, Ullrich, 4,065,510, Cl. 260-632.00B.
Deutsche Texaco Aktiengesellschaft: *See—*
Rietsch, Eike, 4,065,665, Cl. 364-487.000.
DeVries, Adrian J., to Zenith Radio Corporation. Surface wave device for use in a ghost cancellation system. 4,065,789, Cl. 358-167.000.
Dexion-Comino International Limited: *See—*
Hewett, Alan R.; and Robilliard, Leonard T., 4,064,813, Cl. 108-60.000.
Diamond Shamrock Corporation: *See—*
Whyte, Andrew; Gallup, William A.; Schenker, Barry A.; and Schulz, Robert A., 4,065,376, Cl. 204-263.000.
Diaz, Nelson Ramon, to Honeywell Information Systems Inc. Apparatus for cutting and forming flexible beam leads of an integrated circuit chip. 4,064,917, Cl. 140-105.000.
Dickerson, George E., to United States of America, National Aeronautics and Space Administration. Composite lamination method. 4,065,340, Cl. 156-154.000.
Dickey, Charles R.; and Voorhees, Vanderveer, to Bray Oil Co. Magnesium oxide process. 4,065,396, Cl. 252-33.400.
Dickey, John W.; and Babb, Larry F., to Emerson Electric Co. Device for facilitating the bending and forming of plastic pipe or other structures. 4,065,242, Cl. 425-384.000.
Dickinson, William B., to Sterling Drug Inc. N-(4-Amino-2-butynyl)imides. 4,065,471, Cl. 260-326.00N.
Diebel, Howard, to Moyer Diebel Limited. Vent structure for dishwashers. 4,064,888, Cl. 134-182.000.
Dietzgen Corporation: *See—*
Schuman, Gordon A., 4,064,933, Cl. 165-89.000.
Dilg, Walter C.; and Glauser, Wilbert G., to Dresser Industries, Inc. Railway coupler and draft rigging. 4,064,998, Cl. 213-69.000.
Ditter, Jerome F.; and Klusmann, Eugene B., to United States of America, Navy. Synthesis of (β-methyl) derivatives of 2,4-dicarba-closo-heptaborane-7. 4,065,509, Cl. 260-606.50B.
Divajex: *See—*
Conklin, Hale, 4,065,336, Cl. 156-69.000.
Dobashi, Harry H., to Union Oil Company of California. Methanation process with intermittent reactivation of catalyst. 4,065,484, Cl. 260-449.60M.
Dobrovolsky, Leonid Vasilievich. Device for selecting sets of rolls for twenty-high rolling mill. 4,064,728, Cl. 72-238.000.
Dr. Ing. h.c.F. Porsche AG, Firma: *See—*
Weber, Rudiger, 4,064,897, Cl. 137-224.000.
Dodson, William Carter, Jr.: *See—*
Contractor, Rashmikant Maganlal; Dodson, William Carter, Jr.; Hentges, James John; and Seppala, Earl Edwin, 4,064,597, Cl. 19-156.300.
Dolgos, Charles: *See—*
Pobuta, Walter; and Dolgos, Charles, 4,064,918, Cl. 140-123.600.
Domeshek, Sol. Method of enhancing the information legibility of multi-color graphic material. 4,065,309, Cl. 96-14.000.
Domtar Limited: *See—*
Findlay, David Michael, 4,065,504, Cl. 260-600.00R.
Dooley, J. Gordon: *See—*
Feldman, Louis I.; and Dooley, J. Gordon, 4,065,580, Cl. 426-33.000.
Doolittle, Mac R., to Clark Equipment Company. Steering mechanism. 4,064,967, Cl. 180-155.000.
Doria, Gianfederico; Giraldi, PierNicola; Lauria, Francesco; Corno, Maria Luisa; Sberze, Piero; and Tibolla, Marcello, to Carlo Erba, S. p. A. 5:6-Benzo δ-pyrone derivatives and process for their preparation. 4,065,467, Cl. 260-345.200.
Doriath, Gerard: *See—*
Micheron, Francois; Doriath, Gerard; and Spitz, Eric, 4,065,677, Cl. 307-112.000.
Doughty, Robert L. Turntable for record disc. 4,065,135, Cl. 274-39.00R.
Douglas, James L.: *See—*
Horning, Donald E.; Morris, Leeson R.; and Douglas, James L., 4,065,622, Cl. 544-105.000.
Downing, James D., to Delta and Pine Land Company of Mississippi. Apparatus for delinting cottonseed. 4,064,636, Cl. 34-60.000.
Doyle, Terrence W.: *See—*
Belleau, Bernard R.; Doyle, Terrence W.; Luh, Bing Yu; and Conway, Terry T., 4,065,623, Cl. 544-105.000.
Dravo Corporation: *See—*
Cappel, Fred; Hastik, Walter; Fleming, Georges; and Hofmann, Pierre, 4,065,295, Cl. 75-5.000.
Draxler, James Richard, to Brunswick Corporation. Electric starter interlock for outboard motor devices. 4,064,823, Cl. 115-17.000.
Dresser Industries, Inc.: *See—*
Dilg, Walter C.; and Glauser, Wilbert G., 4,064,998, Cl. 213-69.000.
Englert, Robert Dixon; and Armstrong, Kenneth Ronald, 4,065,526, Cl. 261-62.000.
Marquis, Gerald L., 4,064,939, Cl. 166-253.000.
Drexelbrook Controls, Inc.: *See—*
Sun, Robert J.; and Maltby, Frederick L., 4,064,753, Cl. 73-304.00C.
Dreyer, William J., to Durrum Instrument Corporation. Peptide or protein sequencing method and apparatus. 4,065,412, Cl. 260-8.000.
Dudley, George M. Mono-page paper distributor. 4,065,118, Cl. 271-14.000.
Dujardin, Esther; Kuiper, Ysbrand; Cremer, Rene; and Sironval, Cyrille. Fixing and retrieving recorded information produced by means of photosensitive material of biological origin. 4,065,310, Cl. 96-27.00R.
Dumas, Bernard Roger: *See—*
Lorson, Pierre Michel; and Dumas, Bernard Roger, 4,065,332, Cl. 149-19.900.
Dumitrescu, Ioan Florin; Cojocaru, Constantin; and Bolintineanu, Constantin, to Centrul de Protectia si Igiena Muncii. Method and device for evaluating nerve impulse propagation velocity and latency of electrodermal reflexes. 4,064,870, Cl. 128-2.00N.
Dunbar, Jack E.: *See—*
Cramer, Robert L.; Dunbar, Jack E.; and Mientus, James A., 4,064,875, Cl. 128-142.200.
Duncan, Eugene G.; and Spaniola, James W., to General Motors Corporation. Low tire pressure warning circuit for a tractor/trailer combination. 4,065,750, Cl. 340-58.000.
Dunn, John G.: *See—*
Wong, James Y.; Kashyap, Satish C.; and Dunn, John G., 4,065,655, Cl. 219-10.55D.
Dunn, William M., to TRW Inc. Method for making multi-layer capacitors. 4,064,606, Cl. 29-25.420.
Du Pont de Nemours, E. I., and Company: *See—*
Contractor, Rashmikant Maganlal; Dodson, William Carter, Jr.; Hentges, James John; and Seppala, Earl Edwin, 4,064,597, Cl. 19-156.300.
Frazer, August Henry, 4,065,431, Cl. 260-47.00C.
Frazer, August Henry, 4,065,432, Cl. 260-47.00C.
Jackson, Harold Leonard, 4,065,259, Cl. 8-166.000.
Logothetis, Anestis Leonidas, 4,065,613, Cl. 526-292.000.
May, Ralph Forrest, 4,065,525, Cl. 260-989.000.
Sayre, James Franklin; and Smale, Karl Harvey, 4,064,712, Cl. 66-192.000.
Thorpe, John Anton; and Porter, Harold Felton, 4,065,486, Cl. 260-465.300.
Durmann, George J. Apparatus for spraying heat responsive materials. 4,065,057, Cl. 239-79.000.
Durrum Instrument Corporation: *See—*
Dreyer, William J., 4,065,412, Cl. 260-8.000.
Dussault, Jean G. M.; Geckle, Robert A.; and Puskas, William L., to Branson Ultrasonics Corporation. Apparatus for cleaning workpieces by ultrasonic energy. 4,064,885, Cl. 134-58.00R.
Dybas, Richard A.: *See—*
Grier, Nathaniel; Dybas, Richard A.; and Strelitz, Robert A., 4,065,497, Cl. 260-563.00P.
Dyck, George J., to Canadian Patents and Development Limited. Vehicle weighing scale. 4,064,955, Cl. 177-134.000.
Dynachem Corporation: *See—*
Yamazaki, Toshio; Cook, Harriet J.; and Lipson, Melvin A., 4,065,315, Cl. 96-48.0QP.

Dynetics, Inc.: *See—*
Crankshaw, John H., 4,064,979, Cl. 192-53.00F.
E. F. Johnson Company: *See—*
Wahi, Chander M., 4,065,201, Cl. 339-103.00R.
E. R. Squibb & Sons, Inc.: *See—*
Hauck, Frederic P.; and Reid, Joyce, 4,065,485, Cl. 260-464.000.
Krapcho, John; and Turk, Chester F., 4,065,617, Cl. 542-450.000.
Narayanan, Venkatachala L.; Gadebusch, Hans H.; and Haugwitz, Rudiger D., 4,065,563, Cl. 424-272.000.
Earhart, John E.; Lachenmaier, Frank D.; and McConnell, John E., to General Motors Corporation. Electrical coil assembly. 4,065,740, Cl. 336-136.000.
Eastman Kodak Company: *See—*
Harvey, Donald Malcolm, 4,065,778, Cl. 354-25.000.
Jaskowsky, Jorg, 4,065,661, Cl. 364-464.000.
Pond, David M.; Wang, Richard H. S.; and Irick, Gether, Jr., 4,065,427, Cl. 260-45.8NT.
Shippey, Frederick Lee, 4,065,313, Cl. 96-60.0BF.
Zielinski, Erich, 4,065,042, Cl. 226-92.000.
Eaton Corporation: *See—*
Bart, Hansueli, 4,064,845, Cl. 123-32.00G.
German, Dale F.; and Nidle, Charles, 4,064,923, Cl. 152-427.000.
Tinholt, Thomas H., 4,064,980, Cl. 192-58.00B.
Walsh, Michael M., 4,065,100, Cl. 254-167.000.
Eaton Yale Ltd.: *See—*
Wildey, Allan J., 4,064,956, Cl. 180-24.050.
Eberhardt, H. Alfred, to Hale Fire Pump Company. Plural fluid proportioning apparatus. 4,064,891, Cl. 137-98.000.
Eberhart, James G.: *See—*
Roche, Michael F.; Faist, Suzan M.; Eberhart, James G.; and Ross, Laurids E., 4,065,602, Cl. 429-72.000.
Ebner, Walter B.; and Walk, Charles Richard, to United States of America, Army. Process for preparing lithium hexafluoroarsenate of high purity. 4,065,550, Cl. 423-464.000.
Echols, Marvin C.; and Gruller, David L., to Zap-Lok Systems International, Inc. Method of joining plastic coated pipe. 4,064,619, Cl. 29-458.000.
Echte, Adolf: *See—*
Wild, Hans; Jeckel, Guenter; Echte, Adolf; Zizlsperger, Johann; Reffert, Rudi Wilhelm; and Thielen, Gunter, 4,065,532, Cl. 264-68.000.
Echterhoff, Heinz: *See—*
Gemmeke, Wilfried; Werner, Heinrich; Echterhoff, Heinz; and Raulf, Erich, 4,065,296, Cl. 75-48.000.
Ecker, Amir L.: *See—*
Edwards, Thomas C.; and Ecker, Amir L., 4,064,705, Cl. 62-2.000.
Eckstein, George R.; and Moyher, William G., to Remington Arms Company, Inc. Method of making plastic cartridge casing. 4,065,541, Cl. 264-295.000.
Eco-Control, Inc.: *See—*
Ajami, Alfred M.; Walsh, Fraser M.; and Crouse, Dennis N., 4,065,601, Cl. 429-50.000.
Ecodyne Corporation: *See—*
Flynn, George; and Salem, Eli, 4,065,388, Cl. 210-80.000.
Econompoulos, Mario: *See—*
Paulus, Philippe; and Econompoulos, Mario, 4,065,329, Cl. 148-18.000.
Eddy, Clifford O.; and Hoffend, Thomas R., to Xerox Corporation. Fixing method using polyarylsiloxanes as release agents. 4,065,586, Cl. 427-22.000.
Edge, Gordon Malcolm: *See—*
Ridler, Keith Douglas; Gosling, Alexander Bennett; and Edge, Gordon Malcolm, 4,065,188, Cl. 308-10.000.
Edmonds, Stephen: *See—*
Roberts, William C., Jr.; and Edmonds, Stephen, 4,064,821, Cl. 114-103.000.
Edwards, James T., II. Rate/time computer and control device. 4,065,663, Cl. 364-464.000.
Edwards, Thomas C.; and Ecker, Amir L., to Rovac Corporation, The. Air conditioning system having compressor-expander in pressurized closed loop system with solar assist and thermal storage. 4,064,705, Cl. 62-2.000.
Effbe-Werk Fritz Brumme & Co. KG: *See—*
Weisenberger, Gottfried, 4,064,910, Cl. 137-627.500.
Egan, Michael F. High-bounce amusement and exercise air bag. 4,065,124, Cl. 272-65.000.
Eguchi, Seiji: *See—*
Suzuki, Seigo; and Eguchi, Seiji, 4,065,639, Cl. 178-69.100.
Egyt Gyogyszervegyeszeti Gyar: *See—*
Rakoczi, Jozsef; Beck, Ivan; Kiss, Csaba; Horvath, Imre; and Nemes, Miklos, 4,065,450, Cl. 260-239.00B.
Ehama, Mituo: *See—*
Abe, Fumiyuki; Ikawa, Kazuo; Ehama, Mituo; and Ogawa, Naoki, 4,065,157, Cl. 280-751.000.
Eichelberger, Charles W.: *See—*
Butler, Walter J.; and Eichelberger, Charles W., 4,065,766, Cl. 340-347.0AD.
Eikosha Co., Ltd.: *See—*
Fukada, Rokuro, 4,065,261, Cl. 21-74.00R.
Eiland, P. Frank: *See—*
Spanel, Abram N.; Eiland, P. Frank; and Jacobs, David R., 4,064,816, Cl. 112-79.00A.
Eissler, John C., to Crown Cork & Seal Company, Inc. Pouring fitment for metal topped container. 4,065,035, Cl. 222-153.000.
Eklund, John Folke; and Svensson, Sven-Hakan, to AB Bofors. Magazine for a mobile firearm. 4,064,787, Cl. 89-34.000.
El-Jay, Inc.: *See—*
Johnson, Louis W., 4,065,063, Cl. 241-275.000.
Elders, Gerald W. Point-attack bit. 4,065,185, Cl. 299-86.000.
Elders, Marius J. A.; Vink, Nicolaas G.; and van Steen, Cornelis, to U.S. Philips Corporation. Deflection coil unit comprising toroidally wound coils for a color television display tube. 4,065,738, Cl. 335-213.000.
Electric Machinery Mfg. Company: *See—*
Schlicher, David W.; and Fabian, Liboslav, 4,065,703, Cl. 318-176.000.
Elematic Instrument Corporation: *See—*
Deisenroth, Norbert F.; Nordhaus, John P.; and Siegelman, Abe, 4,064,751, Cl. 73-207.000.
Eli Lilly and Company: *See—*
Beck, James Richard; and Gajewski, Robert Peter, 4,065,463, Cl. 260-307.00A.
Froyd, James D., 4,065,559, Cl. 424-229.000.
Spitzer, Wayne Alfred, 4,065,618, Cl. 544-16.000.
Spitzer, Wayne Alfred, 4,065,621, Cl. 544-30.000.
Taylor, Harold Mellon, 4,065,290, Cl. 71-94.000.
Webber, John Alan, 4,065,620, Cl. 544-16.000.
Elias, Jack, to Honeywell Inc. Battery backup for AC powered DC supply. 4,065,676, Cl. 307-66.000.
Elkem-Spigerverket A/S: *See—*
Dahl, Erik Qvale, 4,065,551, Cl. 423-483.000.
Elwin, Tore, to AB Bofors. Method and device for automatic ammunition handling. 4,064,786, Cl. 89-33.00B.
Emerson Electric Co.: *See—*
Dickey, John W.; and Babb, Larry F., 4,065,242, Cl. 425-384.000.
Pauli, Jude A., 4,064,826, Cl. 116-117.00C.
Emery Industries, Inc.: *See—*
Foulks, Harold C., Jr.; Rodenberg, Herbert G.; and Mains, Harold E., 4,065,418, Cl. 260-23.0XA.
Emig, Peter; Pohle, Hans; Scheffler, Gerhard; Brock, Norbert; Lenke, Hans-Dieter; and Pohl, Jorg, to Asta-Werke Aktiengesellschaft. Basic enol ether and acid addition salts thereof. 4,065,501, Cl. 260-570.600.
Enders, Edgar: *See—*
Fest, Christa; Enders, Edgar; Eue, Ludwig; and Schmidt, Robert R., 4,065,292, Cl. 71-99.000.
Endo, Eiji: *See—*
Oda, Yoshio; Suhara, Manabu; and Endo, Eiji, 4,065,366, Cl. 204-98.000.
Endo Laboratories, Inc.: *See—*
Finizio, Michael, 4,065,453, Cl. 424-248.560.
Endres, Thomas E.; and Rodeman, Donald W., to General Motors Corporation. Tuned radio frequency amplifier with back to back varactor diodes connected through a common cathode lead. 4,065,723, Cl. 330-302.000.
Engelhardt, Edward L.: *See—*
Atkinson, Joseph George; Rooney, Clarence Stanley; Girard, Yves; and Engelhardt, Edward L., 4,065,572, Cl. 424-273.00R.
Engert, David Michael: *See—*
Martin, Richard Thomas, Jr.; and Engert, David Michael, 4,065,131, Cl. 273-134.00B.
Englert, Robert Dixon; and Armstrong, Kenneth Ronald, to Dresser Industries, Inc. Fuel introduction device for internal combustion engine. 4,065,526, Cl. 261-62.000.
Enomoto, Hiroshi: *See—*
Ohata, Katsuya; Enomoto, Hiroshi; Yoshikuni, Yoshiaki; Kono, Tatsuhiko; and Yagi, Masahiro, 4,065,562, Cl. 424-267.000.
Entzmann, Karl. Process for the production of cement clinker from fuel shale. 4,065,321, Cl. 106-106.000.
Ericson, Alvin E.: *See—*
Walitalo, Charles R.; and Ericson, Alvin E., 4,064,776, Cl. 83-171.000.
Erni, Bruno; and Meister, Pierre-Andre, to Societe Suisse pour l'Industrie Horlogere Management Services S.A. Keyboard switch assembly having flexible rung ladder contacts. 4,065,651, Cl. 200-5.00A.
Ernst, Arnold E. Spring trip mechanism. 4,064,946, Cl. 172-710.000.
Ernst, Horst Manfred; Olschewski, Armin; Schurger, Rainer; Walter, Lothar; Brandenstein, Manfred; Burkl, Erich; and Kiener, Heinz, to SKF Industrial Trading and Development Company, B.V. Thrust ball bearing. 4,065,193, Cl. 308-233.000.
Ess, John O., to United States of America, Navy. Pressure-balanced underwater structural release system. 4,064,783, Cl. 85-33.000.
Estes, John H.: *See—*
Bartley, Burton H.; and Estes, John H., 4,065,514, Cl. 260-676.00R.
Etat Francais represente par le Delegue Ministeriel pour l'Armement: *See—*
Maguer, Pierre; and Verveur, Jean, 4,065,748, Cl. 340-9.000.
Ethyl Corporation: *See—*
Kao, James T. F., 4,065,546, Cl. 423-300.000.
Malec, Robert E., 4,065,499, Cl. 260-567.60M.
Eue, Ludwig: *See—*
Fest, Christa; Enders, Edgar; Eue, Ludwig; and Schmidt, Robert R., 4,065,292, Cl. 71-99.000.
Hofer, Wolfgang; Schliebs, Reinhard; Schmidt, Robert; and Eue, Ludwig, 4,065,288, Cl. 71-76.000.
Evans Products Company: *See—*
Ridenour, Michael R., 4,065,052, Cl. 236-86.000.
Evans, Ronald C., to McIntosh Laboratory, Inc. Logarithmic converter. 4,065,682, Cl. 307-261.000.
Evers, William J.; Heinsohn, Howard H., Jr.; Shuster, Edward J.; and

Schmitt, Frederick Louis, to International Flavors & Fragrances Inc. α-Oxy(oxo) sulfide perfume and cologne compositions. 4,065,408, Cl. 252-522.000.
Evjen, Clarence E.: *See—*
Christenson, Roger M.; and Evjen, Clarence E., 4,065,415, Cl. 260-17.4SG.
Christenson, Roger M.; and Evjen, Clarence E., 4,065,416, Cl. 260-17.4SG.
Evkin, Ivan Frolovich; Petrov, Vladimir Alexandrovich; Olevsky, Viktor Markovich; Ruchinsky, Vitaly Rafael-Abovich; Bushev, Vladimir Semenovich; and Tatyanchikov, Valentin Alexeevich. Roter thin-film evaporator. 4,065,346, Cl. 159-6.00R.
Ex-Cell-O Corporation: *See—*
Wunder, William G., 4,064,928, Cl. 164-264.000.
Exxon Research and Engineering Company: *See—*
Hulme, Roger, 4,065,405, Cl. 252-415.000.
Moser, John F., Jr.; and Behrmann, William C., 4,065,516, Cl. 260-683.470.
Say, Geoffrey R.; Baird, William C., Jr.; and Kamienski, Paul W., 4,065,381, Cl. 208-134.000.
Van Auken, Richard L., 4,065,150, Cl. 280-610.000.
Ezekoye, Levi Ike. Multi-position multi-purpose support and storage structure. 4,064,580, Cl. 5-327.00B.
Fabian, Frank-Dietrich; and Leucht, Rainer, to Daimler-Benz Aktiengesellschaft. Front section of a motor vehicle, especially of a passenger motor vehicle. 4,065,170, Cl. 296-37.100.
Fabian, Liboslav: *See—*
Schlicher, David W.; and Fabian, Liboslav, 4,065,703, Cl. 318-176.000.
Fagan, William J. Golf club grip attachment. 4,065,127, Cl. 273-81.00D.
Fahmie, John H. Collapsible dog feeder. 4,065,195, Cl. 312-258.000.
Fahrni, Peter: *See—*
Hostettler, Werner, 4,065,003, Cl. 214-16.600.
Faid, Robert W.; and Reinhart, William F., to W. R. Grace & Co. Post-applied waterstop connection. 4,064,672, Cl. 52-726.000.
Fairclough, Roy: *See—*
Jenkins, Stanley Frederick Noel; Fairclough, Roy; Howard, Brian Arthur; and Miley, Frederick, 4,065,078, Cl. 244-104.0FP.
Faist, Suzan M.: *See—*
Roche, Michael F.; Faist, Suzan M.; Eberhart, James G.; and Ross, Laurids E., 4,065,602, Cl. 429-72.000.
Fals, Henry J., to Raymond Lee Organization, Inc., The, a part interest. Guitar pick. 4,064,781, Cl. 84-322.000.
Farabaugh, Patrick, to Sybron Corporation. Fluid distributor. 4,065,391, Cl. 210-274.000.
Farber, Milton; Loveless, Frederick C.; and Peterson, Robert F., Jr., to Uniroyal, Inc. Puncture sealing composition and tire. 4,064,922, Cl. 152-347.000.
Farrell, James L.: *See—*
Hill, David A.; Pearson, Durk J.; Motley, Ethelyn P.; Beard, Thomas N.; and Farrell, James L., 4,065,183, Cl. 299-4.000.
Farrissey, William J., Jr.: *See—*
Andrews, Philip S.; Farrissey, William J., Jr.; Onder, Besir K.; and Tilley, James N., 4,065,441, Cl. 260-78.00R.
Fasciati, Alfred: *See—*
Buhler, Arthur; Fasciati, Alfred; and Schlumpf, Karl, 4,065,254, Cl. 8-1.00C.
Fast, Clarence R., to Standard Oil Company (Indiana). Well screen with erosion protection walls. 4,064,938, Cl. 166-236.000.
Fastner, Thorwald; Niedermayr, Alois; Nakesch, Johann; and Turmer, Max, to Vereinigte Osterreichische Eisen- und Stahlwerke-Alpine Montan Aktiengesellschaft. Continuous casting method and apparatus. 4,064,925, Cl. 164-66.000.
fea Devices, Inc.: *See—*
Feldon, Arthur, 4,065,760, Cl. 340-244.00R.
Federau, Heinz: *See—*
Brendel, Hugo; and Federau, Heinz, 4,065,245, Cl. 425-503.000.
Fehrenbach, Siegfried; and Feuerbacher, Alfred, to Robert Bosch GmbH. Air valve for a fuel injection system. 4,064,854, Cl. 123-139.0AW.
Feldman, Louis I.; and Dooley, J. Gordon, to GB Fermentation Industries, Inc. Lipolytic enzyme flavoring system. 4,065,580, Cl. 426-33.000.
Feldon, Arthur, to fea Devices, Inc. Liquid level sensor. 4,065,760, Cl. 340-244.00R.
Ferranti Limited: *See—*
Wright, David Allan, 4,065,113, Cl. 267-156.000.
Fest, Christa; Enders, Edgar; Eue, Ludwig; and Schmidt, Robert R., to Bayer Aktiengesellschaft. Herbicidal agents. 4,065,292, Cl. 71-99.000.
Feuerbacher, Alfred: *See—*
Fehrenbach, Siegfried; and Feuerbacher, Alfred, 4,064,854, Cl. 123-139.0AW.
Feuersanger, Alfred E.: *See—*
Haugsjaa, Paul O.; and Feuersanger, Alfred E., 4,065,701, Cl. 315-248.000.
Fiat-Allis Construction Machinery, Inc.: *See—*
Boersma, Richard F., 4,064,767, Cl. 74-491.000.
Fibron, Inc.: *See—*
Gustafson, Kenneth C.; and Chastain, Edward L., 4,065,538, Cl. 264-154.000.
Fields, Ellis K.; Zimmerschied, Wilford J.; and Palmer, David A., to Standard Oil Company. Pyrolysis compositions from silver salts of polycarboxylic acids. 4,065,442, Cl. 260-78.410.
Figueres, Roger: *See—*
Quehen, Andre; and Figueres, Roger, 4,064,929, Cl. 164-433.000.
Filderman, Rene, to Societe Anonyme Francaise du Ferodo. Actuator mounting assembly for a multi-disc brake. 4,064,974, Cl. 188-71.300.
Filderman, Rene Gabriel, to Societe Anonyme Francaise du Ferodo. Laminated noise-preventing support for the friction lining of a brake shoe. 4,064,975, Cl. 188-73.500.
Findlay, David Michael, to Domtar Limited. Process for the methylation of hydroxybenzene derivatives. 4,065,504, Cl. 260-600.00R.
Finizio, Michael, to Endo Laboratories, Inc. Levorotatory molindone and the use as an antidepressant. 4,065,453, Cl. 424-248.560.
Fiocca, Louis L., to Advanced Instrument Development, Inc. Rotor controller systems for X-ray tubes. 4,065,673, Cl. 250-402.000.
Firestone Tire & Rubber Company, The: *See—*
Pilarski, Regis V.; and Yates, Gerald A., 4,065,070, Cl. 242-107.40A.
Flanagan, John J., to Corporate Brands, Inc. Hard surface detergent composition. 4,065,409, Cl. 252-528.000.
Fleigle, Donald Earl, to Black and Decker Manufacturing Company, The. Cordless twin blade lawnmower construction. 4,064,680, Cl. 56-11.900.
Fleischman, Andor A., to Bell & Howell Company. Short focal length optical system with large aperture. 4,065,205, Cl. 350-216.000.
Fleming, Georges: *See—*
Cappel, Fred; Hastik, Walter; Fleming, Georges; and Hofmann, Pierre, 4,065,295, Cl. 75-5.000.
Fletcher, James C.; Miller, Charles G.; and Stephens, James B. Low cost solar energy collection system. 4,065,053, Cl. 237-1.00A.
Flexible Steel Lacing Company: *See—*
Pray, Winston C., 4,065,045, Cl. 227-147.000.
Florida Machine of Boca Raton: *See—*
Caron, Marshall J., 4,064,586, Cl. 15-1.700.
Flynn, George; and Salem, Eli, to Ecodyne Corporation. Process for removal of undissolved impurities from ion exchange resin. 4,065,388, Cl. 210-80.000.
Foddis, Antonio. Universal eye pressure impulse tonometer and method of measuring the intra-ocular pressure. 4,064,743, Cl. 73-80.000.
Fontana, Frank J., to Stewart-Warner Corporation. Chair control. 4,065,176, Cl. 297-304.000.
Force, John B.: *See—*
Stewart, John A.; Hynes, Roy G.; Beyerlein, David G.; and Force, John B., 4,065,751, Cl. 340-58.000.
Ford Motor Company: *See—*
Bradley, John E., 4,064,695, Cl. 60-517.000.
Labana, Santokh S.; and Theodore, Ares N., 4,065,518, Cl. 260-836.000.
Forde, Louis. Ignition system with multiplex distributor for engines. 4,064,858, Cl. 123-148.0DS.
Forlani, Al. Bacon cooking device. 4,064,797, Cl. 99-341.000.
Forsberg, Karl Sievert: *See—*
Lundkvist, Bror Ludvig; Lindeberg, Sven-Erik; and Forsberg, Karl Sievert, 4,065,652, Cl. 200-175.000.
Foster, Tom: *See—*
Johnson, James Edward; Foster, Tom; and Allan, Roy Duncan, 4,064,692, Cl. 60-261.000.
Foulks, Harold C., Jr.; Rodenberg, Herbert G.; and Mains, Harold E., to Emery Industries, Inc. High molecular weight esters of α-alkyl branched monocarboxylic acids. 4,065,418, Cl. 260-23.0XA.
Foundation: The Research Institute of Electric and Magnetic Alloys, The: *See—*
Masumoto, Hakaru; and Murakami, Yuetsu, 4,065,330, Cl. 148-31.550.
Fox, John F., to Atlanta Metal Products, Inc. Machine for progressively closing flanges of cap strips on standing T-rib roofs. 4,064,819, Cl. 113-55.000.
Fox Valley Corporation: *See—*
Bennett, Walter E., 4,064,990, Cl. 206-494.000.
France, Haywood Gordon, to Union Carbide Corporation. Process for dry cleaning leather. 4,065,258, Cl. 8-142.000.
Francis, John R., to Glenayre Electronics, Ltd. Demodulation method and circuit for discretely modulated ac signals. 4,065,722, Cl. 329-105.000.
Frank, Alan I W, to Alan I W Frank Corporation, The. Apparatus for molding polymeric materials. 4,065,244, Cl. 425-412.000.
Frank W. Murphy Manufacturer, Inc.: *See—*
Murphy, Frank W., Jr.; and Sparks, Buddy G., 4,064,752, Cl. 73-302.000.
Frantz, Virgil L.; and Taylor, Thomas D., to Graham-White Sales Corporation; and Graham-White Manufacturing Co. Solenoid-actuated valve. 4,065,096, Cl. 251-137.000.
Franz, Helmut, to PPG Industries, Inc. Gold-appearing films of copper, nickel and copper oxide layers. 4,065,626, Cl. 428-629.000.
Franz Plasser Bahnbaumaschinen Industriegesellschaft m.b.H.: *See—*
Theurer, Josef, 4,064,807, Cl. 104-7.00A.
Frazer, August Henry, to Du Pont de Nemours, E. I., and Company. Thermally stable, rigid polyesters from aromatic dibasic acids and thermally stable, rigid diols. 4,065,431, Cl. 260-47.00C.
Frazer, August Henry, to Du Pont de Nemours, E. I., and Company. Thermally stable, rigid polyesters from aromatic dibasic acids and thermally stable, rigid bisphenols. 4,065,432, Cl. 260-47.00C.
Frazier, Donald; and Hardin, John R., Jr. Cantilever rack construction. 4,065,089, Cl. 248-245.000.
Freiburger, Thomas M.: *See—*
Boyd, H. Edward; and Freiburger, Thomas M., 4,064,772, Cl. 81-57.130.
French, Eddie C.: *See—*
Martin, Richard L.; and French, Eddie C., 4,065,373, Cl. 204-195.00C.

Freudenschuss, Otto, to Vockenhuber, Karl; and Hauser, Raimund. Cassette rewind stop control for a movie camera. 4,065,209, Cl. 352-72.000.
Frey, Christoph; and von der Crone, Jost, to Ciba-Geigy Corporation. Iminoisoindolinone metal complex. 4,065,462, Cl. 260-299.000.
Frey, Markus, to ITO-Patent AG. Method for measuring the filling level in containers and apparatus for performing the method. 4,064,754, Cl. 73-313.000.
Friedman, Henry C.: *See—*
Mazie, Lowell I.; Friedman, Henry C.; Getzler, Nathaniel; and Grollman, Jack D., 4,064,988, Cl. 206-44.00R.
Friedrichs, Hans-Otto, to Herman Hemscheidt Maschinenfabrik. Hydraulic shield assembly. 4,064,701, Cl. 61-45.00D.
Friello, Dominick R.: *See—*
Reggio, Richard A.; Friello, Dominick R.; and Beam, John E., 4,065,578, Cl. 426-3.000.
Friese, Karl-Hermann: *See—*
Hacker, Wolf-Dieter; Friese, Karl-Hermann; Steinke, Leo; and Weyl, Helmut, 4,065,372, Cl. 204-195.00S.
Frommer, Werner; Gericke, Horst; Keup, Uwe; Puls, Walter; Schmidt, Delt; and Wagner, Otto, to Bayer Aktiengesellschaft. Amino sugars and their use in improving the meat:fat ratio in animals. 4,065,557, Cl. 424-181.000.
Fromson, Howard A. Process for anodizing aluminum. 4,065,364, Cl. 204-15.000.
Froyd, James D., to Eli Lilly and Company. Dinitroanilines for control of soil-borne phytopathogens. 4,065,559, Cl. 424-229.000.
Fry, Eric, to Jonathan Lock Limited. Cylinder lock mechanisms. 4,064,720, Cl. 70-363.000.
Frye, George Joseph; and Geerling, Leonardus Johannes. Automatic acoustical testing system. 4,065,647, Cl. 179-175.10A.
Fuel Injection Development Corporation: *See—*
Leshner, Ervin; and Leshner, Michael D., 4,064,748, Cl. 73-117.300.
Fugono, Takeshi: *See—*
Morimoto, Shiro; Nomura, Hiroaki; Fugono, Takeshi; and Minami, Isao, 4,065,619, Cl. 544-25.000.
Fuji Photo Film Co., Ltd.: *See—*
Sakaguchi, Shinji; Imai, Shinichi; Yamaguchi, Junn; and Tsuji, Nobuo, 4,065,435, Cl. 260-47.0UP.
Satomura, Masato, 4,065,430, Cl. 260-47.0UA.
Sugisaki, Tsutomu; and Watanabe, Hideomi, 4,065,798, Cl. 360-128.000.
Takahashi, Yutaka; Hakamata, Yoshio; and Konno, Masamitu, 4,064,677, Cl. 53-123.000.
Fujii, Noboru: *See—*
Kubota, Katsuyuki; Fujii, Noboru; Yamada, Kouichi; Nakamura, Kimikazu; and Yuuki, Norihito, 4,064,616, Cl. 29-429.000.
Fujitsu Limited: *See—*
Owaki, Kenichi; Ando, Shizuo; and Nakayama, Norihiko, 4,065,698, Cl. 313-489.000.
Fukada, Rokuro, to Eikosha Co., Ltd. Device for emitting volatile substance. 4,065,261, Cl. 21-74.00R.
Fukuda, Mitsuo: *See—*
Kawai, Shoji; Nishimura, Kenichi; and Fukuda, Mitsuo, 4,065,358, Cl. 195-127.000.
Fulenwider, Hal, Jr. Microwave energy apparatus and method for internal combustion engines. 4,064,852, Cl. 123-119.00E.
Fuller Company: *See—*
Anthony, James, 4,065,064, Cl. 241-299.000.
Fumio, Yamazaki: *See—*
Yoshiyuki, Honma; and Fumio, Yamazaki, 4,065,234, Cl. 417-420.000.
Funahashi, Takaji. Rotary stamp. 4,064,802, Cl. 101-327.000.
Funakoshi, Kouzi: *See—*
Mizukawa, Takumi; Nakamura, Masatatsu; Funakoshi, Kouzi; and Kominami, Hideyuki, 4,065,802, Cl. 361-18.000.
Funkhouser, James Harold. Upper boat deck. 4,064,584, Cl. 9-1.100.
Furlong, Donn Breen; and Londahl, Dickey Steele, to Tuthill Pump Company. Gear pump. 4,065,235, Cl. 417-420.000.
Furukawa Electric Co. Ltd., The: *See—*
Shii, Hikaru; and Oda, Eisuke, 4,065,594, Cl. 428-113.000.
Furuta, Sachiko: *See—*
Nishiumi, Shiro; Hasegawa, Shoichi; Mizoguchi, Toshiyuki; and Furuta, Sachiko, 4,065,599, Cl. 428-402.000.
Gabriel, Gerhard: *See—*
Beck, Heinz; Gabriel, Gerhard; and Poppel, Gunter, 4,065,608, Cl. 526-49.000.
Gabriele, Leonard A.: *See—*
Bistrick, Eugene J.; Abrahamsson, Axel B.; Szewczyk, Andrew J.; McCabe, Frank A.; Schlaf, Richard A.; and Gabriele, Leonard A., 4,065,222, Cl. 407-18.000.
Gaddum, Friedbert. Method of providing representation of aging of material. 4,064,745, Cl. 73-91.000.
Gadebusch, Hans H.: *See—*
Narayanan, Venkatachala L.; Gadebusch, Hans H.; and Haugwitz, Rudiger D., 4,065,563, Cl. 424-272.000.
Gaetjen, John Richard: *See—*
Cramer, Clark Evans; Gaetjen, John Richard; Grant, Carl Henry; Nelson, Paul Eugene; and Newlin, Frank Allen, III, 4,065,810, Cl. 364-200.000.
Gajary, Antal: *See—*
Pfliegel, Todor; Seres, Jeno; Gajary, Antal; Daroczy nee Csuka, Klara; and Nagy, Lajos T., 4,065,491, Cl. 260-502.500.
Gajewski, Robert Peter: *See—*
Beck, James Richard; and Gajewski, Robert Peter, 4,065,463, Cl. 260-307.00A.
Galli, Giuliano: *See—*
Cecere, Francesco; Galli, Giuliano; Della Penna, Gino; and Rappuoli, Bruno, 4,065,353, Cl. 195-2.000.
Gallup, William A.: *See—*
Whyte, Andrew; Gallup, William A.; Schenker, Barry A.; and Schulz, Robert A., 4,065,376, Cl. 204-263.000.
Gamlen, Philip Hugh, to Imperial Chemical Industries Limited. Stabilized hypochlorous acid and hypochlorite solutions. 4,065,545, Cl. 423-265.000.
Gammon, Howard M. Filter. 4,065,392, Cl. 210-282.000.
Gannon, Charles R., to Ashland Oil, Inc. Pitch impregnated articles and process for making same. 4,065,591, Cl. 428-36.000.
Garber, Murray: *See—*
Reger, David William; Garber, Murray; and Long, Don Wesley, 4,065,466, Cl. 260-327.00M.
Garczynski, John S.; Jablanofsky, Charles C.; and Murray, Joseph P., to Peripheral Dynamics, Inc. Card reader system with improved interface. 4,065,662, Cl. 235-419.000.
Garlock Inc.: *See—*
Hunt, Raymon E., 4,064,962, Cl. 181-272.000.
Garrett Corporation, The: *See—*
House, William H.; and Pierik, Gerald A., 4,064,981, Cl. 192-141.000.
Gaspar, James T.: *See—*
Noble, Lowell; and Gaspar, James T., 4,065,370, Cl. 204-192.00N.
Gassaway, James Scott. Equipment security device. 4,065,083, Cl. 248-19.000.
Gassel, Myron Michael. Method of inducing skeletal muscle relaxation. 4,065,561, Cl. 424-263.000.
Gates Rubber Company, The: *See—*
Hug, Leonard F.; McClelland, Donald H.; and Uba, Toshio, 4,064,725, Cl. 72-147.000.
Gateway Industries, Inc.: *See—*
Romanzi, Louis, Jr., 4,064,603, Cl. 24-230.00A.
Gaul, Michael F. Crypt structure. 4,064,664, Cl. 52-136.000.
Gaumer, Lee S.: *See—*
Newton, Charles L.; and Gaumer, Lee S., 4,065,278, Cl. 62-26.000.
Gawlinski, Louis S. Adjustable deck chair. 4,065,172, Cl. 297-19.000.
Gayle, Harold R.; and Wagner, Walter D., to Sun Oil Company of Pennsylvania. Break-away safety valve. 4,064,889, Cl. 137-68.00R.
GAZ-Transport: *See—*
Letourneur, Jean-Claude; and Jean, Pierre, 4,065,019, Cl. 220-9.0LG.
GB Fermentation Industries, Inc.: *See—*
Feldman, Louis I.; and Dooley, J. Gordon, 4,065,580, Cl. 426-33.000.
Geary, Carl H.: *See—*
Miller, William H., Jr.; and Geary, Carl H., 4,065,136, Cl. 277-3.000.
Gebert, Kineko. Sewing tape. 4,064,631, Cl. 33-2.00R.
Geckle, Robert A.: *See—*
Dussault, Jean G. M.; Geckle, Robert A.; and Puskas, William L., 4,064,885, Cl. 134-58.00R.
Geerling, Leonardus Johannes: *See—*
Frye, George Joseph; and Geerling, Leonardus Johannes, 4,065,647, Cl. 179-175.10A.
Geiger, Paul B.; Grunewald, Ernst; and Vallor, Ben J., to Hobart Corporation. Upper level wash arm system. 4,064,887, Cl. 134-144.000.
Gellatly, Walter L. Fire pit hanger. 4,065,085, Cl. 248-124.000.
Gellerstedt, Nils Goran Axel: *See—*
Dahlberg, Stig Erland; and Gellerstedt, Nils Goran Axel, 4,064,805, Cl. 102-35.000.
Gemmeke, Wilfried; Werner, Heinrich; Echterhoff, Heinz; and Raulf, Erich, to Verkaufsgesellschaft fur Teererzeugnisse (VfT). Process for preparing composition containing carbon and low sulfur, nitrogen and ash content. 4,065,296, Cl. 75-48.000.
General Electric Company: *See—*
Bailey, Francis M., 4,065,704, Cl. 318-237.000.
Butler, Walter J.; and Eichelberger, Charles W., 4,065,766, Cl. 340-347.0AD.
Groves, James N., 4,065,357, Cl. 195-103.50R.
Hicks, William R.; and Miller, Homer R., 4,065,705, Cl. 318-245.000.
Jones, William B., 4,065,653, Cl. 200-302.000.
Keim, Robert E., 4,065,658, Cl. 219-386.000.
Langford, John R. F., 4,065,322, Cl. 134-7.000.
Lupinski, John H.; Boldebuck, Edith M.; and Barnes, Wilson J., 4,065,420, Cl. 260-29.20N.
McVey, Charles I., 4,065,691, Cl. 313-174.000.
Nash, Dudley O., 4,064,691, Cl. 60-39.060.
Pratt, Richard D.; Proffitt, Paul F.; and Webb, George, 4,065,394, Cl. 252-8.100.
Rodgers, Douglas Noss; and Roy, Prodyot, 4,065,371, Cl. 204-195.00R.
Ruark, Bruce J.; and Shaner, Richard L., 4,065,027, Cl. 220-343.000.
Selin, Terry G., 4,065,482, Cl. 260-448.20E.
General Mills Chemicals, Inc.: *See—*
Harrison, Stuart A., 4,065,627, Cl. 560-26.000.
Lundmark, Larry D.; Melby, Allan; and Chun, Ho-ming, 4,065,422, Cl. 260-29.60E.

MacKay, Kenneth D.; and Rogier, Edgar R., 4,065,502, Cl. 260-590.00R.
Mattison, Phillip L., 4,065,455, Cl. 260-289.0XA.
General Motors Corporation: *See—*
Black, Dennis A., 4,065,229, Cl. 417-270.000.
Bodnar, Alfred D., 4,065,152, Cl. 280-668.000.
Braniff, Michael J.; and Waller, James L., 4,065,182, Cl. 297-452.000.
Carella, Richard F.; and Perry, Thomas W., 4,065,178, Cl. 297-341.000.
Denzer, Richard E., 4,065,146, Cl. 280-278.000.
Duncan, Eugene G.; and Spaniola, James W., 4,065,750, Cl. 340-58.000.
Earhart, John E.; Lachenmaier, Frank D.; and McConnell, John E., 4,065,740, Cl. 336-136.000.
Endres, Thomas E.; and Rodeman, Donald W., 4,065,723, Cl. 330-302.000.
Gunlock, Donald E.; and Manetta, John A., 4,065,181, Cl. 297-452.000.
Jaffe, James M.; and Hile, John W., 4,065,715, Cl. 324-60.0CD.
Johnston, Laird E., 4,064,652, Cl. 49-394.000.
Knape, Richard S.; and Lukas, Joseph, 4,065,058, Cl. 239-88.000.
Lo, Wayne, 4,064,621, Cl. 29-569.00L.
Magyar, Joseph J., 4,065,072, Cl. 242-107.700.
Penningroth, Herbert M.; and Guyton, James H., 4,065,719, Cl. 325-312.000.
Pogue, Russell W., Jr., 4,065,720, Cl. 325-464.000.
Rabe, Paul R., 4,065,721, Cl. 328-1.000.
Rogers, Lloyd W., Jr., 4,065,155, Cl. 280-744.000.
Stewart, John A.; Hynes, Roy G.; Beyerlein, David G.; and Force, John B., 4,065,751, Cl. 340-58.000.
Williams, Donald L.; and Baker, James T., 4,065,026, Cl. 220-304.000.
Wilson, James R.; and Wise, Jerry P., 4,065,800, Cl. 360-137.000.
Winchell, Frank J., 4,065,144, Cl. 280-771.000.
Wunderlich, Langley H., 4,064,978, Cl. 188-331.000.
General Signal Corporation: *See—*
Huffman, Jerry P.; LaForest, John P.; Petit, William A.; and Smith, James A., 4,065,081, Cl. 246-34.00R.
Neuhof, Jacob; and Scott, Robert D., 4,065,767, Cl. 340-384.00E.
Geraci, Vincent M. Board game with time indicator means. 4,065,130, Cl. 273-130.0AB.
Gergely, Alex Sandor, to Philip Morris, Inc. Jam prevention device for extrusion process. 4,065,239, Cl. 425-141.000.
Geri, Don Winston: *See—*
Inose, Fumiyuki; and Geri, Don Winston, 4,064,983, Cl. 197-1.00A.
Gericke, Horst: *See—*
Frommer, Werner; Gericke, Horst; Keup, Uwe; Puls, Walter; Schmidt, Delt; and Wagner, Otto, 4,065,557, Cl. 424-181.000.
Gerigk, Gunter; Bittner, Klaus-Jurgen; and Kostner, Armin, to Hoechst Aktiengesellschaft. Method of making sheathed stick. 4,064,673, Cl. 53-3.000.
Germain, Stanley A., to L. A. Steelcraft Products, Inc. In-post tennis net tightener. 4,065,099, Cl. 254-164.000.
German, Dale F.; and Nidle, Charles, to Eaton Corporation. Tire valve assembly. 4,064,923, Cl. 152-427.000.
Gerretz, Richard, to Mannesmann Aktiengesellschaft. Tube expander. 4,064,730, Cl. 72-393.000.
Gess, Larry C. Apparatus for producing a package. 4,064,792, Cl. 93-18.000.
Getner, Edwin S. Multi-purpose stand. 4,064,993, Cl. 211-85.000.
Getzler, Nathaniel: *See—*
Mazie, Lowell I.; Friedman, Henry C.; Getzler, Nathaniel; and Grollman, Jack D., 4,064,988, Cl. 206-44.00R.
Gezari, Walter A., to Hart Associates, Inc. Reciprocating infusion pump and directional adapter set for use therewith. 4,065,230, Cl. 417-317.000.
Giakas, William. Maze puzzle. 4,065,132, Cl. 273-153.00R.
Giers, Alfred; Holdinghausen, Paul; Schneider, Hatto; and Widmann, Friedman, to Carl Schenck AG, Firma. Method and apparatus for ascertaining and indicating the angular position of an unbalance in a rotor. 4,064,761, Cl. 73-462.000.
Gijrath, Johannes Henricus Nicolaas, to U.S. Philips Corporation. Cathode ray tube color selection electrode mount. 4,065,693, Cl. 313-406.000.
Gillespie, David L. Fibre-reinforced laminates. 4,065,597, Cl. 428-285.000.
Gilmore, David D., Jr. Anti-vandalism lock device for panic-type doors. 4,065,160, Cl. 292-92.000.
Gipson, Robert Malone, to Texaco Development Corporation. Boride catalyst for epoxidizing olefinic compounds. 4,065,476, Cl. 260-348.290.
Giraldi, PierNicola: *See—*
Doria, Gianfederico; Giraldi, PierNicola; Lauria, Francesco; Corno, Maria Luisa; Sberze, Piero; and Tibolla, Marcello, 4,065,467, Cl. 260-345.200.
Girard, Yves: *See—*
Atkinson, Joseph George; Rooney, Clarence Stanley; Girard, Yves; and Engelhardt, Edward L., 4,065,572, Cl. 424-273.00R.
Girod, Ronald Eugene, to Bell Telephone Laboratories. Communication facility integrity checking arrangement. 4,065,643, Cl. 179-18.0AH.
Gittings, Robert S., to Gold Medal, Inc. Folding chair. 4,065,173, Cl. 297-45.000.
Glaeser, George L., Jr.: *See—*
Painter, Alan; O'Neill, Daniel R.; and Glaeser, George L., Jr., 4,065,044, Cl. 226-188.000.
Glaum, Gerald Vernon: *See—*
Subramanian, Kohur Nagaraja; and Glaum, Gerald Vernon, 4,065,542, Cl. 423-35.000.
Glauser, Wilbert G.: *See—*
Dilg, Walter C.; and Glauser, Wilbert G., 4,064,998, Cl. 213-69.000.
Glaze, Stanley George, to Lucas Industries Limited. Vehicle suspension systems. 4,065,154, Cl. 280-707.000.
Glenayre Electronics, Ltd.: *See—*
Francis, John R., 4,065,722, Cl. 329-105.000.
Glifberg, Nils Bertil, to Svenska Sockerfabriks AB. Machine for removing foliage from root crops. 4,064,681, Cl. 56-121.450.
Global Marine, Inc.: *See—*
Thornburg, Russell B., 4,064,822, Cl. 114-230.000.
Gluck, Julius; and Vijayendran, Bheema Rao, to Pitney-Bowes, Inc. Toner density controller. 4,064,833, Cl. 118-646.000.
Glyco-Metallwerke Daelen & Loos GmbH: *See—*
Sauer, Friedrich; and Muller, Klaus, 4,065,378, Cl. 204-297.00W.
Godard, Pierre; and Lapuyade, Robert Henri, to Societe des Accumulateurs Fixes et de Traction. Rapid charging system and method for sealed storage cells. 4,065,712, Cl. 320-39.000.
Godbout, Antonin: *See—*
Lavertu, Roger R.; and Godbout, Antonin, 4,065,529, Cl. 264-3.00E.
Goell, James E.; and Brandt, H. David, to International Telephone and Telegraph Corporation. Couplers for electro-optical elements. 4,065,203, Cl. 350-96.00C.
Goell, James E.: *See—*
Kao, Charles K.; Goell, James E.; and Maklad, Mokhtar S., 4,065,280, Cl. 65-3.00A.
Goffe, William L., to Xerox Corporation. Imaged agglomerable element and process of imaging. 4,065,307, Cl. 96-1.50R.
Gold Medal, Inc.: *See—*
Gittings, Robert S., 4,065,173, Cl. 297-45.000.
Gold, Roy Charles, to British Petroleum Company Limited, The. Flow monitoring devices. 4,065,675, Cl. 250-576.000.
Goldberg, Leslie Louis. Check digit generation and verification apparatus. 4,065,752, Cl. 340-146.1AJ.
Golden, Edward J.: *See—*
Sliwa, Robert A.; and Golden, Edward J., 4,065,709, Cl. 320-1.000.
Golden, Joseph A.: *See—*
Zavitsanos, Peter D.; Golden, Joseph A.; and Alyea, Frederick N., 4,065,207, Cl. 350-312.000.
Golz, Hans-Joachim: *See—*
Lindenberg, Hans-Georg; Illmann, Joachim; and Golz, Hans-Joachim, 4,065,116, Cl. 269-22.000.
Gomori, Alexandre. Electronic table soccer game. 4,065,128, Cl. 273-85.00D.
Goodfriend, Harvey J.: *See—*
Rackliffe, Richard J.; Goodfriend, Harvey J.; and Armstrong, Lee R., 4,064,747, Cl. 73-116.000.
Goodspeed, Raymond Frank: *See—*
Roberts, Gregory Todhunter; Owens, David Vincent; and Goodspeed, Raymond Frank, 4,065,299, Cl. 75-67.00A.
Goodyear Tire & Rubber Company, The: *See—*
Hunter, Edward E., 4,064,830, Cl. 118-57.000.
Gora, Ullrich: *See—*
Schreyer, Gerd; Tanner, Herbert; Weigert, Wolfgang; and Gora, Ullrich, 4,065,510, Cl. 260-632.00B.
Gordon, Fred Morris, to American Cyanamid Company. Soil treatment insecticide. 4,065,558, Cl. 424-216.000.
Gordos, Ambrose L. Golf club head structure. 4,065,133, Cl. 273-167.00E.
Gosling, Alexander Benett; and Mealing, Barrie Ewart, to Danfoss A/S. Brushless D.C. motor. 4,065,706, Cl. 318-254.000.
Gosling, Alexander Bennett: *See—*
Ridler, Keith Douglas; Gosling, Alexander Bennett; and Edge, Gordon Malcolm, 4,065,188, Cl. 308-10.000.
Gotchel, Joel Peter; Norton, Henry James; and Spengos, Aris C., to Scott Paper Company. Method for forming fibrous structures. 4,064,600, Cl. 19-156.300.
Gouda, Kanenari: *See—*
Kawaguchi, Yoshihiko; Harada, Yoshimi; Miki, Makoto; Gouda, Kanenari; Akiyama, Masaharu; Tokura, Masayuki; and Kuroha, Jun, 4,065,419, Cl. 260-28.50D.
Gould Inc.: *See—*
Hou, Shou L.; Dague, Leonard P.; and Agrawal, Arun K., 4,065,775, Cl. 346-140.00R.
Goulet, Donald L.: *See—*
Ruud, Alan J.; and Lewin, Ian, 4,065,667, Cl. 362-217.000.
Gover, Avraham; Samid, Ilan; and Lee, Chien-Ping, to California Institute of Technology. Monolithic PNPN injection laser optical repeater. 4,065,729, Cl. 331-94.50H.
Graber, David A. Method and apparatus for interaction of gas and liquid. 4,065,527, Cl. 261-79.00A.
Graf, Rolf: *See—*
Weckesser, Ernst; Sparwald, Volker; Reh, Lothar; Bohm, Eberhard; and Graf, Rolf, 4,065,271, Cl. 55-2.000.
Graham, Peter Charles; and Renison, Joseph Theo. Threaded connections. 4,064,785, Cl. 85-62.000.
Graham-White Manufacturing Co.: *See—*
Frantz, Virgil L.; and Taylor, Thomas D., 4,065,096, Cl. 251-137.000.

Graham-White Sales Corporation: *See—*
Frantz, Virgil L.; and Taylor, Thomas D., 4,065,096, Cl. 251-137.000.
Grant, Andrew Campbell, to Union Carbide Corporation. Porous metallic layer and formation. 4,064,914, Cl. 138-142.000.
Grant, Carl Henry: *See—*
Cramer, Clark Evans; Gaetjen, John Richard; Grant, Carl Henry; Nelson, Paul Eugene; and Newlin, Frank Allen, III, 4,065,810, Cl. 364-200.000.
Grasselli, Robert K.; Suresh, Dev D.; and Miller, Robert C., to Standard Oil Company. Manufacture of maleic anhydride from butane. 4,065,468, Cl. 260-346.750.
Grasselli, Robert K.: *See—*
Hardman, Harley F.; Callahan, James L.; and Grasselli, Robert K., 4,065,507, Cl. 260-604.00R.
Gray, Kenneth Walter; and Rees, Huw David, to United Kingdom of Great Britain and Northern Ireland, The Secretary of State for Defence in Her Britannic Majesty's Government of the. Field-effect transistors. 4,065,782, Cl. 357-23.000.
Green Shield Trading Stamp Company Limited: *See—*
Wood, William, 4,064,645, Cl. 40-159.000.
Gregg, Richard G., to Pines Trailer Corporation. Trailer van construction. 4,065,168, Cl. 296-28.00M.
Greif, Francis. Underphone index. 4,064,643, Cl. 40-65.000.
Gremaud, Maurice: *See—*
Unterweger, Heinz; and Gremaud, Maurice, 4,065,805, Cl. 361-196.000.
Greten, Berndt, to Bison-werke Bahre & Greten GmbH & Co. KG. Apparatus for metering particles containing lignocellulose, such as wood chips or the like, which are to be provided with binders. 4,065,030, Cl. 222-55.000.
Grey, James S.: *See—*
Hodgson, David A.; and Grey, James S., 4,064,715, Cl. 70-18.000.
Grier, Nathaniel; Dybas, Richard A.; and Strelitz, Robert A., to Merck & Co., Inc. Novel dibicyclo [3.1.1] and [2.2.1] heptyl and dibicyclo [3.1.1] and [2.2.1] heptenyl polyamines. 4,065,497, Cl. 260-563.00P.
Griesshammer, Rudolf: *See—*
Koppl, Franz; Griesshammer, Rudolf; and Hamster, Helmut, 4,065,533, Cl. 264-81.000.
Griffiths, William S. Helmet structure. 4,064,565, Cl. 2-412.000.
Grigorenko, Anatoly Sergeevich; Kravchenko, Vasily Savelievich; Moroz, Jury Antonovich; Kortusov, Leonid Ivanovich; and Vimba, Vladimir Ivanovich. Press. 4,064,733, Cl. 72-453.030.
Grocke, Diethelm, to Nutro Patentverwertungs-und Maschinen-Handels GmbH. Apparatus for drawing a side-folded tube over piled objects. 4,064,678, Cl. 53-183.000.
Grollman, Jack D.: *See—*
Mazie, Lowell I.; Friedman, Henry C.; Getzler, Nathaniel; and Grollman, Jack D., 4,064,988, Cl. 206-44.00R.
Groner, Norman Arlo, to Victor United, Inc. Compound bow. 4,064,862, Cl. 124-23.00R.
Groody, James. Artist's board. 4,065,596, Cl. 428-215.000.
Groves, James N., to General Electric Company. Detection of catalase-containing bacteria. 4,065,357, Cl. 195-103.50R.
Gruller, David L.: *See—*
Echols, Marvin C.; and Gruller, David L., 4,064,619, Cl. 29-458.000.
Grundei, Hans; and Thomas, Wolfram, to Sanitatshaus Schuutt & Grundei. Knee-joint endoprostheses. 4,064,568, Cl. 3-1.911.
Grunewald, Ernst: *See—*
Geiger, Paul B.; Grunewald, Ernst; and Vallor, Ben J., 4,064,887, Cl. 134-144.000.
GTE Automatic Electric Laboratories Incorporated: *See—*
Zellmer, Neale A., 4,065,807, Cl. 363-16.000.
GTE Laboratories Incorporated: *See—*
Haugsjaa, Paul O.; and Feuersanger, Alfred E., 4,065,701, Cl. 315-248.000.
GTE Sylvania Incorporated: *See—*
MacInnis, Martin B.; and Quatrini, L. Rita, 4,065,413, Cl. 260-9.000.
Gulf Oil Corporation: *See—*
Collins, Kenneth L., 4,064,953, Cl. 175-321.000.
Gulf Research & Development Company: *See—*
Bacha, John D.; Matthews, Joseph S.; and Selwitz, Charles M., 4,065,470, Cl. 260-346.750.
Bailey, Wayne E., 4,065,395, Cl. 252-25.000.
Swift, Harold E.; and Vogel, Roger F., 4,065,380, Cl. 208-89.000.
Gulick, Joseph F.; and Marlow, Donald R., to United States of America, Navy. Random scanning receiver. 4,065,771, Cl. 343-100.0SA.
Gun, Dmitry Rudolfovich: *See—*
Alexandrov, Adolf Moritsovich; Aglitsky, Vladimir Efimovich; Tsimbler, Jury Abramovich; Lurie, Mikhail Vladimirovich; Topolyansky, Jury Arnoldovich; Kantor, Ilya Solomonovich; Chizhikov, Anatoly Petrovich; and Gun, Dmitry Rudolfovich, 4,065,076, Cl. 243-38.000.
Gunlock, Donald E.; and Manetta, John A., to General Motors Corporation. Cushion retention for a vehicle seat. 4,065,181, Cl. 297-452.000.
Guseinov, Idris Aslan ogly: *See—*
Rizaev, Ramiz Gasan Kuli ogly; Mekhtiev, Soltan Dzhafarovich; Magerramova, Zemfira Jusif kyzy; Sheinin, Viktor Efimovich; Mirataev, Mirabdulla Mirakhmed ogly; and Guseinov, Idris Aslan ogly, 4,065,487, Cl. 260-465.00C.
Gustafson, Kenneth C.; and Chastain, Edward L., to Fibron, Inc. Process for reducing dust in fibrillated yarn. 4,065,538, Cl. 264-154.000.
Gutknecht, Peter, to Westinghouse Electric Corporation. Insulated-gate thin film transistor with low leakage current. 4,065,781, Cl. 357-23.000.
Guyton, James H.: *See—*
Penningroth, Herbert M.; and Guyton, James H., 4,065,719, Cl. 325-312.000.
H. G. Olson & Co., Inc.: *See—*
Olson, Harold G., 4,064,654, Cl. 49-489.000.
Haak, Willard Q.; and Carlson, Guy C., Jr., to Caterpillar Tractor Co. Dual radial piston pump or motor. 4,064,790, Cl. 91-492.000.
Habib, Robert. Machine for machining spiral cutting edges on cutting tools. 4,064,657, Cl. 51-33.00W.
Hacker, Wolf-Dieter; Friese, Karl-Hermann; Steinke, Leo; and Weyl, Helmut, to Robert Bosch GmbH. Electrochemical oxygen sensing element, particularly for determination of oxygen content in the exhaust gases of automotive internal combustion engines. 4,065,372, Cl. 204-195.00S.
Hakamata, Yoshio: *See—*
Takahashi, Yutaka; Hakamata, Yoshio; and Konno, Masamitu, 4,064,677, Cl. 53-123.000.
Hale Fire Pump Company: *See—*
Eberhardt, H. Alfred, 4,064,891, Cl. 137-98.000.
Haley, Paul H.: *See—*
Whyte, Ian A.; and Haley, Paul H., 4,065,763, Cl. 340-310.00R.
Hall, Charles B.; and Young, Robert F., to Outboard Marine Corporation. Hydraulically powered marine propulsion tilting and trimming system with memory. 4,064,824, Cl. 115-41.0HT.
Haller, Thomas L., to Procter & Gamble Company, The. Non-spurting twist-open dispensing closure. 4,065,037, Cl. 222-153.000.
Hallerback, Stig Lennart, to SKF Industrial Trading and Development Company, B.V. Self adjusting elevating temperature bearing and housing. 4,065,190, Cl. 308-15.000.
Halliburton Company: *See—*
Barrington, Burchus Q., 4,064,937, Cl. 166-162.000.
Halstead Industries, Inc.: *See—*
Nussbaum, Otto J., 4,064,868, Cl. 126-271.000.
Hamblin, Richard David, to Archibald Kenrick and Sons Limited. Door handle mechanisms. 4,065,165, Cl. 292-348.000.
Hamer, Anthony David; and Karol, Frederick John, to Union Carbide Corporation. Phenol modified polymerization catalyst and polymerization process. 4,065,612, Cl. 526-130.000.
Hamilton, Willard C.: *See—*
Jelfo, Raymond L.; Strella, Stephen; and Hamilton, Willard C., 4,065,585, Cl. 427-11.000.
Hamling, Bernard H.; and Naumann, Alfred W., to Union Carbide Corporation. Finely divided metal oxides and sintered objects therefrom. 4,065,544, Cl. 423-252.000.
Hamster, Helmut: *See—*
Koppl, Franz; Griesshammer, Rudolf; and Hamster, Helmut, 4,065,533, Cl. 264-81.000.
Handing, Theodore E. Smoke detector. 4,065,759, Cl. 340-237.500.
Haney, Robert M., to J. I. Case Company. Electronic depth control system. 4,064,945, Cl. 172-4.000.
Hannon, James V.: *See—*
King, George; and Hannon, James V., 4,064,676, Cl. 53-77.000.
Hanson, Lester. Apparatus and system for processing oil shale. 4,065,361, Cl. 196-98.000.
Harada, Tetsuo: *See—*
Kataoka, Yushin; Harada, Tetsuo; and Takagi, Kenji, 4,065,362, Cl. 203-58.000.
Harada, Yoshimi: *See—*
Kawaguchi, Yoshihiko; Harada, Yoshimi; Miki, Makoto; Gouda, Kanenari; Akiyama, Masaharu; Tokura, Masayuki; and Kuroha, Jun, 4,065,419, Cl. 260-28.50D.
Hardin, John R., Jr.: *See—*
Frazier, Donald; and Hardin, John R., Jr., 4,065,089, Cl. 248-245.000.
Hardman, Harley F.; Callahan, James L.; and Grasselli, Robert K., to Standard Oil Company. Preparation of methacrylic derivatives from tertiary butyl-containing compounds. 4,065,507, Cl. 260-604.00R.
Hardouin, Michel Jean Charles: *See—*
Tilly, Guy; Hardouin, Michel Jean Charles; and Lautrou, Jean, 4,065,553, Cl. 424-5.000.
Tilly, Guy; Hardouin, Michel Jean Charles; and Lautrou, Jean, 4,065,554, Cl. 424-5.000.
Hardware Designers, Inc.: *See—*
Stein, Robert R., 4,065,196, Cl. 312-333.000.
Harms, Wolfgang: *See—*
Bien, Hans-Samuel; and Harms, Wolfgang, 4,065,446, Cl. 260-146.00D.
Harnessed Energies, Inc.: *See—*
Robinson, Kermit Hamlin, 4,065,745, Cl. 340-3.00D.
Harpster, Joseph William. Ultraviolet sensor and exposure instrument. 4,065,672, Cl. 250-372.000.
Harrison, Arthur Michael, to Micron Instruments. Pressure transducer structure. 4,064,758, Cl. 73-398.0AR.
Harrison & Sons (High Wycombe) Limited: *See—*
Wood, William, 4,064,645, Cl. 40-159.000.
Harrison, Stuart A., to General Mills Chemicals, Inc. High molecular weight radiation curable resins. 4,065,627, Cl. 560-26.000.
Hart Associates, Inc.: *See—*
Gezari, Walter A., 4,065,230, Cl. 417-317.000.
Hartman, George F. Swivels. 4,064,604, Cl. 24-236.000.
Harty, Gene R.: *See—*
Andersen, John A.; and Harty, Gene R., 4,065,217, Cl. 403-24.000.
Harvey, Donald Malcolm, to Eastman Kodak Company. Automatic rangefinder and focusing apparatus. 4,065,778, Cl. 354-25.000.

Hasegawa, Ryusuke, to Allied Chemical Corporation. Glassy metal alloy temperature sensing elements for resistance thermometers. 4,064,757, Cl. 73-362.0AR.
Hasegawa, Shoichi: *See—*
Nishiumi, Shiro; Hasegawa, Shoichi; Mizoguchi, Toshiyuki; and Furuta, Sachiko, 4,065,599, Cl. 428-402.000.
Hashimoto, Akihiko: *See—*
Maitani, Yoshihisa; Shimoyama, Kunio; Yoshida, Muneaki; Hashimoto, Akihiko; and Kitagawa, Masahiro, 4,065,777, Cl. 354-23.00R
Hastik, Walter: *See—*
Cappel, Fred; Hastik, Walter; Fleming, Georges; and Hofmann, Pierre, 4,065,295, Cl. 75-5.000.
Hatz, Ernst, to Motorenfabrik Hatz GmbH & Co. KG. Internal combustion engine with a pressure-compensating arrangement in the crankcase of the engine. 4,064,853, Cl. 123-119.00B.
Hauck, Frederic P.; and Reid, Joyce, to E. R. Squibb & Sons, Inc. Cyclitolamines. 4,065,485, Cl. 260-464.000.
Haug, Theobald: *See—*
Muller, Albrecht; Haug, Theobald; and Renner, Alfred, 4,065,433, Cl. 260-47.0UA.
Haugsjaa, Paul O.; and Feuersanger, Alfred E., to GTE Laboratories Incorporated. Electrodeless light source with reduced heat losses. 4,065,701, Cl. 315-248.000.
Haugwitz, Rudiger D.: *See—*
Narayanan, Venkatachala L.; Gadebusch, Hans H.; and Haugwitz, Rudiger D., 4,065,563, Cl. 424-272.000.
Hauser, Raimund: *See—*
Freudenschuss, Otto, 4,065,209, Cl. 352-72.000.
Haws, Spencer Kim. Machine for harvesting asparagus stalks and the like. 4,064,682, Cl. 56-327.00A.
Hayashi, Masaki; Kori, Seiji; Miyake, Hajimu; and Okada, Takanori, to Ono Pharmaceutical Company. 16-Phenoxy and phenylthio prostaglandin derivatives. 4,065,632, Cl. 560-55.000.
Hayashi, Teishichi, to Nichimen Co., Ltd. Wrap feeding device for circular knitting machine. 4,064,709, Cl. 66-135.000.
Heckele, Helmut, to Riwoplan Medizin-Technische Einrichtungs-Gesellschaft mbH. Apparatus for cleansing endoscopes. 4,064,886, Cl. 134-95.000.
Heeren, Richard H., to Teletype Corporation. Dynamic logic system. 4,065,679, Cl. 307-251.000.
Heian, Glenn A.; and Kohl, Robert F., to Allis-Chalmers Corporation. System for handling high sulfur materials. 4,065,320, Cl. 106-100.000.
Heiderpriem, Theodore B. Buns which have centrally-located recesses. 4,065,581, Cl. 426-138.000.
Heimberger, Helmut, to Optilon W. Erich Heilmann GmbH. Warp-knit slide fastener stringer half and method of making same. 4,064,602, Cl. 24-205.10C.
Heinrich, Richard P.: *See—*
Morris, Gilbert; and Heinrich, Richard P., 4,064,622, Cl. 29-625.000.
Heinsohn, Howard H., Jr.: *See—*
Evers, William J.; Heinsohn, Howard H., Jr.; Shuster, Edward J.; and Schmitt, Frederick Louis, 4,065,408, Cl. 252-522.000.
Helgorsky, Jacques: *See—*
Leroy, Maurice; and Helgorsky, Jacques, 4,065,547, Cl. 423-321.00S.
Helmick, B. J. Sliding door roller assembly. 4,064,593, Cl. 16-105.000.
Helmick, James C., to Victor United, Inc. Arrow rest. 4,064,863, Cl. 124-41.00A.
Hemsath, Klaus H.; and Vereecke, Frank J., to Midland-Ross Corporation. Spray mist cooling arrangement. 4,065,252, Cl. 432-77.000.
Hen, John, to Uniroyal, Inc. Paper coating latex compositions containing copolymers of monovinylidene aromatic monomer, aliphatic conjugated diene and an aryloyloxycarboxylic acid monomer. 4,065,423, Cl. 260-29.70H.
Henry, Paul Mike: *See—*
Lillis, William Joseph; and Henry, Paul Mike, 4,065,725, Cl. 330-254.000.
Hentges, James John: *See—*
Contractor, Rashmikant Maganlal; Dodson, William Carter, Jr.; Hentges, James John; and Seppala, Earl Edwin, 4,064,597, Cl. 19-156.300.
Hercules Incorporated: *See—*
Desmarais, Armand Joseph, 4,065,319, Cl. 106-93.000.
Legrand, Richard Webster, 4,065,535, Cl. 264-94.000.
McAllister, Patrick Von, 4,065,592, Cl. 428-92.000.
Peterson, Albert Henry, 4,065,593, Cl. 428-92.000.
Herczog, Andrew, to Corning Glass Works. Hermetic enclosure for electronic component. 4,065,636, Cl. 174-52.00S.
Herman Hemscheidt Maschinenfabrik: *See—*
Friedrichs, Hans-Otto, 4,064,701, Cl. 61-45.00D.
Hermann Heye: *See—*
Becker, Kurt, 4,065,286, Cl. 65-229.000.
Hermann, Jean; and Choffat, Hubert, to Centre Electronique Horloger S.A. Piezoelectric resonator for timepieces and method for making same. 4,065,684, Cl. 310-351.000.
Hermes, Chester E.: *See—*
Pittman, Robert W.; and Hermes, Chester E., 4,064,749, Cl. 73-152.000.
Herriford, James Lester: *See—*
Castle, William Harold; Crowe, William Ray; and Herriford, James Lester, 4,064,985, Cl. 197-114.00R.
Herrmann, Gunther, to Photocircuits Division of Kollmorgen Corporation. Process for the electrometric measurement of cyanide ions in solutions containing metal ions. 4,065,363, Cl. 204-1.00T.
Hervert, George L., to UOP Inc. Apparatus for the preparation of semiconducting pyropolymeric inorganic refractory oxide materials. 4,064,829, Cl. 118-49.100.
Heslop, Lorne C., to McKee Bros. Limited. Stack feeder. 4,065,062, Cl. 241-101.700.
Heubach, Frank: *See—*
Schomberg, Hermann; and Heubach, Frank, 4,065,808, Cl. 364-200.000.
Hewett, Alan R.; and Robilliard, Leonard T., to Dexion-Comino International Limited. Shelves. 4,064,813, Cl. 108-60.000.
Hewlett-Packard Company: *See—*
Dehart, Scott Alan, 4,065,796, Cl. 360-51.000.
Heymes, Alain; and Maffrand, Jean-Pierre, to Parcor. 4,5,6,7-Tetrahydro-thieno[3,2-c]-pyridine derivatives and process for their preparation. 4,065,460, Cl. 260-294.80C.
Heymes, Alan; and Maffrand, Jean-Pierre, to Parcor. Process for the preparation of thieno(3,2-c) pyridine and derivatives thereof. 4,065,459, Cl. 260-294.80C.
Hiatt, Sarah: *See—*
Moscowitz, George S.; Rosen, John F.; and Hiatt, Sarah, 4,064,877, Cl. 128-188.000.
Hicks, William R.; and Miller, Homer R., to General Electric Company. SCR controlled universal motor. 4,065,705, Cl. 318-245.000.
Hile, John W.: *See—*
Jaffe, James M.; and Hile, John W., 4,065,715, Cl. 324-60.0CD.
Hill, David A.; Pearson, Durk J.; Motley, Ethelyn P.; Beard, Thomas N.; and Farrell, James L., to TRW Inc. Recovery system for oil shale deposits. 4,065,183, Cl. 299-4.000.
Hill, Homer G.: *See—*
Wong, Robert; and Hill, Homer G., 4,065,417, Cl. 260-17.4CL.
Hill, Howard D. W., to Varian Associates, Inc. Pulsed RF excited spectrometer having improved pulse width control. 4,065,714, Cl. 324-.50A.
Hilti Aktiengesellschaft: *See—*
Chromy, Franz, 4,064,949, Cl. 173-14.000.
Hinze, Dietrich. Method of manufacturing pressure pots having a bayonet catch, and apparatus for carrying out such method. 4,064,726, Cl. 72-70.000.
Hirata, Suekazu: *See—*
Nakaya, Keiichi; Hirata, Suekazu; and Sato, Kunio, 4,065,270, Cl. 23-299.000.
Hirose, Masahiko: *See—*
Ogawa, Kazuyuki; Hirose, Masahiko; Shibagaki, Masahiro; Murakami, Yoshio; and Horiike, Yasuhiro, 4,065,369, Cl. 204-164.000.
Hirschberg, Henry: *See—*
Skare, Helge; and Hirschberg, Henry, 4,065,383, Cl. 210-27.000.
Hirvisaari, Eero: *See—*
Salmi, Pekka; Strom, Rolf; and Hirvisaari, Eero, 4,064,950, Cl. 173-151.000.
Hiscutt, Robert: *See—*
King, Robert David; Hiscutt, Robert; and Molineux, Peter, 4,065,600, Cl. 428-432.000.
Hitachi, Ltd.: *See—*
Inose, Fumiyuki; and Geri, Don Winston, 4,064,983, Cl. 197-1.00A.
Iwasaka, Tatsuo; Kaneko, Takashi; and Shimazaki, Seiichi, 4,064,971, Cl. 187-29.00R.
Kashiwazaki, Seiichi, 4,064,859, Cl. 123-148.00E.
Hitachi Shipbuilding and Engineering Co., Ltd.: *See—*
Okigami, Noboru; Sekiguchi, Yoshitoshi; Ito, Takusen; and Onose, Kenji, 4,065,247, Cl. 431-202.000.
Hobart Corporation: *See—*
Geiger, Paul B.; Grunewald, Ernst; and Vallor, Ben J., 4,064,887, Cl. 134-144.000.
Hodgson, David A.; and Grey, James S., to International Power Pole, Ltd. Anti-theft device. 4,064,715, Cl. 70-18.000.
Hoechst Aktiengesellschaft: *See—*
Gerigk, Gunter; Bittner, Klaus-Jurgen; and Kostner, Armin, 4,064,673, Cl. 53-3.000.
Schroter, Herbert, 4,065,119, Cl. 271-172.000.
von der Eltz, Hans-Ulrich, 4,064,583, Cl. 8-149.100.
Hofer, Gerald; Bofinger, Gunter; Nothdurft, Heinz; Khosrawi, Mohammad-Ali; Simon, Helmut; and Konrath, Karl, to Robert Bosch GmbH. Fuel injection pump for an internal combustion engine. 4,065,236, Cl. 417-493.000.
Hofer, Wolfgang; Schliebs, Reinhard; Schmidt, Robert; and Eue, Ludwig, to Bayer Aktiengesellschaft. Novel 2-chloroethane-(thiono)-phosphonic acid amido compounds and plant growth inhibiting compositions. 4,065,288, Cl. 71-76.000.
Hoffend, Thomas R.: *See—*
Eddy, Clifford O.; and Hoffend, Thomas R., 4,065,586, Cl. 427-22.000.
Hoffmann-La Roche Inc.: *See—*
Brossi, Arnold; Pecherer, Benjamin; and Sunbury, Robert, 4,065,473, Cl. 260-340.50R.
Hoffmeister, Friedrich: *See—*
Mayer, Karl Heinrich; Hoffmeister, Friedrich; and Wuttke, Wolfgang, 4,065,568, Cl. 424-273.00P.
Hofmann, Pierre: *See—*
Cappel, Fred; Hastik, Walter; Fleming, Georges; and Hofmann, Pierre, 4,065,295, Cl. 75-5.000.
Holcomb, Larry Wayne. Tape transport for a cassette. 4,065,075, Cl. 242-199.000.
Holder, Charles B.: *See—*
Lachowicz, Donald R.; and Holder, Charles B., 4,065,521, Cl. 260-879.000.

Holdinghausen, Paul: *See—*
Giers, Alfred; Holdinghausen, Paul; Schneider, Hatto; and Widmann, Friedman, 4,064,761, Cl. 73-462.000.
Holland, Eugene Richard; and Schlieman, Melvin Glynn. Crane swing safety control. 4,064,997, Cl. 212-39.00B.
Hollandsche Beton Groep N. V.: *See—*
Jansz, Joost W., 4,064,702, Cl. 61-53.500.
Hollandse Signaalapparaten B.V.: *See—*
Nijhuis, Jan, 4,064,684, Cl. 57-35.000.
Holmberg, Gote Eskil Yngve. Safety belt retractor. 4,065,071, Cl. 242-107.40A.
Holowaty, Michael O.: *See—*
Aktay, Ali I.; Bodnaruk, Bohdan J.; and Holowaty, Michael O., 4,065,385, Cl. 210-44.000.
Holste, Hilary E.: *See—*
Ladage, Lawrence; and Holste, Hilary E., 4,065,267, Cl. 23-263.000.
Holtz, Hans D., to Phillips Petroleum. Alcohol production. 4,065,511, Cl. 260-635.00R.
Holtzman, Kenneth Allan, to Bell Telephone Laboratories, Incorporated. Printed circuit cover coating comprising an ultraviolet radiation sensitive acrylic resin. 4,065,368, Cl. 204-159.230.
Holzbaur, Siegfried, to Robert Bosch GmbH. Fuel metering and injection system for internal combustion engines. 4,064,843, Cl. 123-32.0EJ.
Holzbaur, Siegfried; and Barth, Horst, to Robert Bosch GmbH. Fuel injection system for internal combustion engines. 4,064,847, Cl. 123-32.0EJ.
Homery, Alex. Metal forming device. 4,064,729, Cl. 72-256.000.
Homs, Juan Puigdomenech. Pivoted window. 4,064,651, Cl. 49-319.000.
Honeywell Inc.: *See—*
Elias, Jack, 4,065,676, Cl. 307-66.000.
Kardashian, Vahram S., 4,065,757, Cl. 365-244.000.
Sikorra, Daniel J., 4,065,189, Cl. 308-10.000.
Honeywell Information Systems Inc.: *See—*
Diaz, Nelson Ramon, 4,064,917, Cl. 140-105.000.
Honnert, Quentin E.: *See—*
Stapp, Willis J.; and Honnert, Quentin E., 4,064,675, Cl. 53-54.000.
Hopp, Harold P. Locking type gasket for spark plugs having fully threaded shanks and tool therefor. 4,064,612, Cl. 29-278.000.
Horii, Satoshi; Kameda, Yukihiko; and Mizokami, Nariakira, to Takeda Chemical Industries, Ltd. Deoxyaminoglycoside antibiotic derivatives. 4,065,615, Cl. 536-10.000.
Horiike, Yasuhiro: *See—*
Ogawa, Kazuyuki; Hirose, Masahiko; Shibagaki, Masahiro; Murakami, Yoshio; and Horiike, Yasuhiro, 4,065,369, Cl. 204-164.000.
Horning, Donald E.; Morris, Leeson R.; and Douglas, James L., to Bristol-Myers Company. O-2-Isocephem-4-carboxylic acid derivatives as antibacterial agents. 4,065,622, Cl. 544-105.000.
Horvath, Imre: *See—*
Rakoczi, Jozsef; Beck, Ivan; Kiss, Csaba; Horvath, Imre; and Nemes, Miklos, 4,065,450, Cl. 260-239.00B.
Horvath, Louis T., to Samuel Moore and Company. Method of making an improved hose and tube coupling. 4,064,614, Cl. 29-417.000.
Hosoi, Kazuo; Kawabe, Norio; and Ohno, Masaji, to Toray Industries, Inc. Process for preparing CIS-epoxysuccinic acid salts of high purity. 4,065,475, Cl. 260-348.310.
Hostettler, Werner, to Fahrni, Peter. Raisable and lowerable mat-loading and press-tray unloading device for a multi-lever press. 4,065,003, Cl. 214-16.600.
Hou, Shou L.; Dague, Leonard P.; and Agrawal, Arun K., to Gould Inc. Ink jet with uniform density trace control for recorders. 4,065,775, Cl. 346-140.00R.
Houghton, Alan: *See—*
Webb, John; and Houghton, Alan, 4,065,582, Cl. 426-231.000.
Houryu, Sakae, to Canon Kabushiki Kaisha. Liquid crystal display device. 4,065,764, Cl. 340-324.00M.
House, John Russell, to Imasa Limited. Black chromate coatings. 4,065,327, Cl. 148-6.210.
House, William H.; and Pierik, Gerald A., to Garrett Corporation, The. Limit stop. 4,064,981, Cl. 192-141.000.
Howard, Brian Arthur: *See—*
Jenkins, Stanley Frederick Noel; Fairclough, Roy; Howard, Brian Arthur; and Miley, Frederick, 4,065,078, Cl. 244-104.0FP.
Hoya Glass Works, Ltd.: *See—*
Asahara, Yoshijuki; and Izumitani, Tetsuro, 4,065,283, Cl. 65-30.00E.
Hruby, John Eugene: *See—*
Rodemeyer, Donald James; and Hruby, John Eugene, 4,064,839, Cl. 119-15.000.
Hudson, Larry Lee: *See—*
Magers, Wallace Farnholm; Hudson, Larry Lee; and Workman, James Phillip, 4,065,038, Cl. 222-321.000.
Huffman, Jerry P.; LaForest, John P.; Petit, William A.; and Smith, James A., to General Signal Corporation. Alternating current track circuits. 4,065,081, Cl. 246-34.00R.
Hug, Leonard F.; McClelland, Donald H.; and Uba, Toshio, to Gates Rubber Company, The. Apparatus for making spirally wound electrochemical cells. 4,064,725, Cl. 72-147.000.
Hughes Aircraft Company: *See—*
Iriarte, Wilfrido R., 4,064,932, Cl. 165-1.000.
Lee, Don H.; Weller, Kenneth P.; Ying, Robert S.; and Thrower, William F., 4,064,620, Cl. 29-580.000.
Hulme, Roger, to Exxon Research and Engineering Company. Recovery of tantalum and/or niobium pentafluorides from a hydrocarbon conversion catalyst. 4,065,405, Cl. 252-415.000.
Hunt, Harrell E. Signal device for rural type mailboxes. 4,065,050, Cl. 232-34.000.
Hunt, Raymon E., to Garlock Inc. Muffler method and apparatus. 4,064,962, Cl. 181-272.000.
Hunter, Edward E., to Goodyear Tire & Rubber Company, The. Apparatus for coating and dewebbing tire cord fabric. 4,064,830, Cl. 118-57.000.
Hurni, William M., to Merck & Co., Inc. Cell removing device. 4,065,359, Cl. 195-127.000.
Husa, Marlin V. Heating apparatus. 4,064,864, Cl. 126-121.000.
Hussain, Anwar A.: *See—*
Bodor, Nicolae S.; Sloan, Kenneth B.; and Hussain, Anwar A., 4,065,566, Cl. 424-266.000.
Hutchinson, Peter L. V.: *See—*
Alter, Hobart L.; and Hutchinson, Peter L. V., 4,065,337, Cl. 156-78.000.
Hutchison, John W., to Pullman Incorporated. Lifting mechanism for sliding doors. 4,064,591, Cl. 16-99.000.
Hutchison, Thomas Sherret; and McBride, Stuart Livingstone, to Canada, Her Majesty the Queen in Right of, as represented by the Minister of National Defence. Excitation and spectral calibration of acoustic emission systems. 4,064,735, Cl. 73-1.00R.
Hutton, Thomas W.; and Rogers, Pamela J., to Rohm and Haas Company. Process for increasing molecular weight of a polymer. 4,065,523, Cl. 260-885.000.
Hyde, Richard E.; and Carmichael, Lee T., to California Strolee, Inc. Infant carrier assembly. 4,065,177, Cl. 297-327.000.
Hydril Company: *See—*
Miyagishima, Tosh, 4,064,601, Cl. 24-16.0PB.
Hygeia Corporation: *See—*
Walters, Ronald D., 4,064,577, Cl. 5-334.00R.
Hynes, Roy G.: *See—*
Stewart, John A.; Hynes, Roy G.; Beyerlein, David G.; and Force, John B., 4,065,751, Cl. 340-58.000.
Ibarguengoitia, Juan Retolaza, to Aplicaciones Industriales de Cromo Duro, S.A. Method for improving frictional surface in cylinders or sleeves of internal combustion engines. 4,065,365, Cl. 204-25.000.
ICI Americas Inc.: *See—*
Rutledge, Thomas F., 4,065,434, Cl. 260-47.0ET.
Ideal Toy Corporation: *See—*
Bartok, Stephen, 4,065,129, Cl. 273-121.00A.
Idel, Vladimir Viktorovich. Machine for sharpening band saw teeth. 4,064,770, Cl. 76-37.000.
Igeta, Kikuji; and Ohguchi, Masakatsu, to Toyo Boseki Kabushiki Kaisha. Method for graft polymerization of shaped article of hydrophobic synthetic polymer. 4,065,256, Cl. 8-115.500.
Iida, Akio, to Kabushiki Kaisha Komatsu Seisakusho. Fluid suspension system. 4,065,143, Cl. 280-43.230.
Iinuma, Yoshio: *See—*
Yasuda, Tetsuya; Iinuma, Yoshio; Maekawa, Yuzo; Kato, Toshikiyo; and Yoshida, Masaru, 4,064,689, Cl. 58-50.00R.
Iizuka, Haruhiko: *See—*
Matsumoto, Junichiro; Iizuka, Haruhiko; and Kato, Fumiaki, 4,064,844, Cl. 123-32.0EA.
Ikawa, Kazuo: *See—*
Abe, Fumiyuki; Ikawa, Kazuo; Ehama, Mituo; and Ogawa, Naoki, 4,065,157, Cl. 280-751.000.
Ikeda Bussan Company, Limited: *See—*
Yokohama, Masao; and Sakai, Shoji, 4,065,174, Cl. 297-66.000.
Ikeda, Hideo: *See—*
Akiyama, Takashi; Tanji, Akinori; Ikeda, Hideo; and Asano, Seiichi, 4,064,605, Cl. 28-103.000.
Ikeda, Takami: *See—*
Sasaki, Kantaro; Ikeda, Takami; Matsuo, Tohru; and Okazaki, Takashi, 4,065,297, Cl. 75-52.000.
Ikeda, Yoshinori: *See—*
Yamai, Fumito; Ishida, Tomohiko; and Ikeda, Yoshinori, 4,065,411, Cl. 260-2.50B.
Ikenaga, Shizuyoshi: *See—*
Takahashi, Kooji; Kojima, Tatsuji; Ishikawa, Teruo; Nakamura, Kimio; and Ikenaga, Shizuyoshi, 4,065,598, Cl. 428-394.000.
Illinois Tool Works Inc.: *See—*
Olsen, Robert Charles, 4,064,989, Cl. 206-428.000.
Illmann, Joachim: *See—*
Lindenberg, Hans-Georg; Illmann, Joachim; and Golz, Hans-Joachim, 4,065,116, Cl. 269-22.000.
Imai, Shinichi: *See—*
Sakaguchi, Shinji; Imai, Shinichi; Yamaguchi, Junn; and Tsuji, Nobuo, 4,065,435, Cl. 260-47.0UP.
Imaizumi, Masaru; and Inagaki, Syotaro, to Minolta Camera Kabushiki Kaisha. Copy paper stripping means. 4,065,120, Cl. 271-174.000.
Imasa Limited: *See—*
House, John Russell, 4,065,327, Cl. 148-6.210.
Imperial Chemical Industries Limited: *See—*
Gamlen, Philip Hugh, 4,065,545, Cl. 423-265.000.
Pinto, Alwyn, 4,065,483, Cl. 260-449.500.
Willmore, Bruce Albert Edward, 4,065,609, Cl. 526-61.000.
Inaba, Shigeho: *See—*
Sasajima, Kikuo; Ono, Keiichi; Nakao, Masaru; Maruyama, Isamu; Katayama, Shigenari; Inaba, Shigeho; and Yamamoto, Hisao, 4,065,565, Cl. 424-250.000.
Inagaki, Syotaro: *See—*
Imaizumi, Masaru; and Inagaki, Syotaro, 4,065,120, Cl. 271-174.000.

Ing. C. Olivetti & C., S.p.A.: *See—*
Siletto, Giorgio; Bena, Piero; and Cestari, Bruno, 4,065,121, Cl. 271-174.000.
Inland Steel Company: *See—*
Aktay, Ali I.; Bodnaruk, Bohdan J.; and Holowaty, Michael O., 4,065,385, Cl. 210-44.000.
Inmont Corporation: *See—*
Bussell, George W.; and Kisel, Martin W., 4,065,425, Cl. 260-33.6EP.
Inose, Fumiyuki; and Geri, Don Winston, to Hitachi, Ltd. Japanese character word processing system. 4,064,983, Cl. 197-1.00A.
Inoue, Toshitugu; Nakamura, Takuji; Onoda, Tadayuki; and Nakatugawa, Tatuo, to Matsushita Electric Industrial Co., Ltd. Facsimile system. 4,065,792, Cl. 358-286.000.
Institut Francais du Petrole: *See—*
Delignieres, Robert, 4,065,744, Cl. 340-3.00D.
Institute fur Ziegelforschung Essen e.V.: *See—*
Pels-Leusden, Carl Otto; Stupperich, Robert; Weber, Hans-Bernd; and Reinders, Rudi, 4,064,639, Cl. 34-212.000.
Institute of Microbiology and Hygiene of The University of Montreal, The: *See—*
Bharucha, Kekhusroo R.; Ajdukovic, Djordje; Pavilanis, Vytautas; and Schrenk, Heinrich Maria, 4,065,570, Cl. 424-273.00R.
Bharucha, Kekhusroo R.; Ajdukovic, Djordje; Pavilanis, Vytautas; and Schrenk, Heinrich Maria, 4,065,571, Cl. 424-273.00R.
Intechsa, S.A.: *See—*
Osborne, Anthony Walter, 4,065,311, Cl. 96-27.00R.
International Business Machines Corporation: *See—*
Arrasmith, Fred Victor; Bruns, Donald George; Moffitt, John Stuart; and Moss, Stanton Kline, 4,065,123, Cl. 271-215.000.
Belleson, James Garman; and Clark, Kendall, 4,065,212, Cl. 356-167.000.
Castle, William Harold; Crowe, William Ray; and Herriford, James Lester, 4,064,985, Cl. 197-114.00R.
Cramer, Clark Evans; Gaetjen, John Richard; Grant, Carl Henry; Nelson, Paul Eugene; and Newlin, Frank Allen, III, 4,065,810, Cl. 364-200.000.
Lee, Chen-Hsiung, 4,065,774, Cl. 346-140.00R.
Ulland, Hartmut; Zimmermann, Volker; and Zuehlke, Rainer, 4,065,708, Cl. 318-685.000.
International Computers Limited: *See—*
Manriquez, Ralph F., 4,065,638, Cl. 178-23.00R.
International Flavors & Fragrances Inc.: *See—*
Evers, William J.; Heinsohn, Howard H., Jr.; Shuster, Edward J.; and Schmitt, Frederick Louis, 4,065,408, Cl. 252-522.000.
International Harvester Company: *See—*
Kolthoff, Clyde Paul, Jr.; and Brennolt, Otto J., 4,064,934, Cl. 165-97.000.
Smith, Spencer E.; and Marek, Donald C., 4,064,768, Cl. 74-528.000.
International Nickel Company, Inc., The: *See—*
Subramanian, Kohur Nagaraja; and Glaum, Gerald Vernon, 4,065,542, Cl. 423-35.000.
Turillon, Pierre Paul, 4,065,302, Cl. 75-208.00R.
International Power Pole, Ltd.: *See—*
Hodgson, David A.; and Grey, James S., 4,064,715, Cl. 70-18.000.
International Standard Electric Corporation: *See—*
Pitt, Gillies D., 4,064,893, Cl. 137-115.000.
International Telephone and Telegraph Corporation: *See—*
Goell, James E.; and Brandt, H. David, 4,065,203, Cl. 350-96.00C.
Kao, Charles K.; Goell, James E.; and Maklad, Mokhtar S., 4,065,280, Cl. 65-3.00A.
Moore, John R., 4,064,623, Cl. 29-629.000.
November, Milton H., 4,064,738, Cl. 73-32.00A.
November, Milton H.; and Lyon, LaVerne D., 4,064,739, Cl. 73-32.00A.
Spangler, Paul Joseph, 4,064,624, Cl. 29-753.000.
INTERx Research Corporation: *See—*
Bodor, Nicolae S.; Sloan, Kenneth B.; and Hussain, Anwar A., 4,065,566, Cl. 424-266.000.
Iori, Giuseppe: *See—*
Moggi, Pietro Antonio; and Iori, Giuseppe, 4,065,469, Cl. 260-346.710.
Iowa State University Research Foundation, Inc.: *See—*
Larock, Richard Craig, 4,065,479, Cl. 260-429.00L.
IPCO Hospital Supply Corporation: *See—*
Benjamin, Thomas A., 4,064,760, Cl. 73-421.00R.
IRD Mechanalysis, Inc.: *See—*
Blackburn, Bobby J., 4,064,704, Cl. 73-660.000.
Ireland, Tracy. Method and apparatus for measuring performance times of a shutter apparatus. 4,064,736, Cl. 73-5.000.
Iriarte, Wilfrido R., to Hughes Aircraft Company. All climate heat exchanger unit with adjustable temperature and defrost control. 4,064,932, Cl. 165-1.000.
Irick, Gether, Jr.: *See—*
Pond, David M.; Wang, Richard H. S.; and Irick, Gether, Jr., 4,065,427, Cl. 260-45.8NT.
Irisawa, Takaji: *See—*
Amano, Tadashi; Kawano, Susumu; Mano, Kenji; and Irisawa, Takaji, 4,064,727, Cl. 72-179.000.
Irvin Great Britain Limited: *See—*
Winchurch, Christopher John, 4,065,079, Cl. 244-152.000.
Ishida, Tomohiko: *See—*
Yamai, Fumito; Ishida, Tomohiko; and Ikeda, Yoshinori, 4,065,411, Cl. 260-2.50B.
Ishidoshiro, Hiroshi: *See—*
Sando, Yoshikazu; and Ishidoshiro, Hiroshi, 4,064,582, Cl. 8-149.300.
Sando, Yoshikazu; and Ishidoshiro, Hiroshi, 4,064,713, Cl. 68-5.00E.
Ishikawa, Hitoshi: *See—*
Sawada, Toshio; Yamamoto, Kimihiko; and Ishikawa, Hitoshi, 4,064,817, Cl. 112-158.00F.
Ishikawa, Katsuji: *See—*
Iwata, Hiroshi; and Ishikawa, Katsuji, 4,065,776, Cl. 354-23.00D.
Ishikawa, Teruo: *See—*
Takahashi, Kooji; Kojima, Tatsuji; Ishikawa, Teruo; Nakamura, Kimio; and Ikenaga, Shizuyoshi, 4,065,598, Cl. 428-394.000.
ITO-Patent AG: *See—*
Frey, Markus, 4,064,754, Cl. 73-313.000.
Ito, Takusen: *See—*
Okigami, Noboru; Sekiguchi, Yoshitoshi; Ito, Takusen; and Onose, Kenji, 4,065,247, Cl. 431-202.000.
Ito, Teruyuki: *See—*
Nakagawa, Yasuhiko; Sasaki, Masahiro; Ito, Teruyuki; and Matuoka, Tosimitu, 4,064,850, Cl. 123-75.00B.
Ittel, Jean-Michel: *See—*
Barbier, Daniel; Ittel, Jean-Michel; and Poujois, Robert, 4,065,758, Cl. 340-227.00R.
Iwabuchi, Takeshi: *See—*
Okada, Naotake; and Iwabuchi, Takeshi, 4,065,517, Cl. 260-823.000.
Iwai, Naoji; Uchida, Takashi; and Abe, Takemi, to Tokyo Shibaura Electric Co., Ltd. Lead frame for a semiconductor device. 4,065,625, Cl. 428-596.000.
Iwanari, Sadayoshi: *See—*
Sakamoto, Yoshimasa; Iwanari, Sadayoshi; and Umene, Osamu, 4,065,741, Cl. 337-407.000.
Iwano, Yoshihiko; and Une, Katsumi, to Tokyo Shibaura Electric Co., Ltd. Nuclear fuel element. 4,065,352, Cl. 176-68.000.
Iwasaka, Tatsuo; Kaneko, Takashi; and Shimazaki, Seiichi, to Hitachi, Ltd. Elevator service information apparatus. 4,064,971, Cl. 187-29.00R.
Iwata, Hiroshi; and Ishikawa, Katsuji, to West Electric Co., Ltd. Camera with automatic flash exposure system. 4,065,776, Cl. 354-23.00D.
Izumitani, Tetsuro: *See—*
Asahara, Yoshiyuki; and Izumitani, Tetsuro, 4,065,283, Cl. 65-30.00E.
J. I. Case Company: *See—*
Haney, Robert M., 4,064,945, Cl. 172-4.000.
J. M. Voith G.m.b.H.: *See—*
Wolf, Robert, 4,064,607, Cl. 29-116.0AD.
J.R. Schneider Co., Inc.: *See—*
Schneider, John R.; and Klyver, Kenneth B., 4,065,390, Cl. 210-225.000.
Jablanofsky, Charles C.: *See—*
Garczynski, John S.; Jablanofsky, Charles C.; and Murray, Joseph P., 4,065,662, Cl. 235-419.000.
Jablin, Richard. Repair gun for coke ovens. 4,065,059, Cl. 239-184.000.
Jackson, Harold Leonard, to Du Pont de Nemours, E. I., and Company. Fluorocarbon dye dispersion for exhaust disperse dyeing. 4,065,259, Cl. 8-166.000.
Jacobs, David R.: *See—*
Spanel, Abram N.; Eiland, P. Frank; and Jacobs, David R., 4,064,816, Cl. 112-79.00A.
Jaffe, James M.; and Hile, John W., to General Motors Corporation. Pulse duration modulated signal transducer. 4,065,715, Cl. 324-60.0CD.
Jaffe, Wolfgang; and Peterson, Wesley Robinson, to Singer Company, The. Reversible direction solenoid assembly. 4,065,739, Cl. 335-234.000.
Jansz, Joost W., to Hollandsche Beton Groep N. V. Apparatus for maintaining axial alignment between a drop hammer and a driven pile. 4,064,702, Cl. 61-53.500.
Japan Air Lines Co., Ltd.: *See—*
Nakamura, Shinji; and Mihirogi, Kiyoshi, 4,064,808, Cl. 104-148.0MS.
Japan Port Consultants, Ltd.: *See—*
Sameshima, Shigeru, 4,064,700, Cl. 61-4.000.
Jaskowsky, Jorg, to Eastman Kodak Company. Photofinishing apparatus. 4,065,661, Cl. 364-464.000.
Jassby, Daniel L.; and Kulsrud, Russell M., to United States of America, Energy Research and Development Administration. Particle beam injection system. 4,065,351, Cl. 176-5.000.
Jean, Pierre: *See—*
Letourneur, Jean-Claude; and Jean, Pierre, 4,065,019, Cl. 220-9.0LG.
Jeckel, Guenter: *See—*
Wild, Hans; Jeckel, Guenter; Echte, Adolf; Zizlsperger, Johann; Reffert, Rudi Wilhelm; and Thielen, Gunter, 4,065,532, Cl. 264-68.000.
Jefferies, Patrick J.; and Crounse, Nathan N., to Sterling Drug Inc. Water-soluble quaternary ammonium azo dyestuffs. 4,065,500, Cl. 260-567.60M.
Jelfo, Raymond L.; Strella, Stephen; and Hamilton, Willard C., to Xerox Corporation. Renewable chow fuser coating. 4,065,585, Cl. 427-11.000.
Jenkins, Oliver James; Ryan, Walter Samuel; and Suit, Leslie David, to

Youngstown Steel Door Company, The. Railway car door actuating apparatus. 4,064,810, Cl. 105-378.000.
Jenkins, Renaldo V.; and Sabol, Alexander P. Rotary engine. 4,064,841, Cl. 123-8.470.
Jenkins, Stanley Frederick Noel; Fairclough, Roy; Howard, Brian Arthur; and Miley, Frederick, to Automotive Products. Aircraft undercarriage suspension. 4,065,078, Cl. 244-104.0FP.
Jenkins, Vaughn Junior: *See—*
Anderson, David Robert; Anderson, Wilbert Cleon; and Jenkins, Vaughn Junior, 4,065,074, Cl. 242-184.000.
Jeno F. Paulucci: *See—*
Ahlgren, David William, 4,065,583, Cl. 426-243.000.
Jenz, Siegfried: *See—*
Pabst, Rolf; and Jenz, Siegfried, 4,064,848, Cl. 123-41.540.
Jeppesen, Borge; and Aas, Flemming, to Radiometer A/S. Membrane mounting device. 4,064,609, Cl. 29-235.000.
Joh. Vaillant KG: *See—*
Meier, Hans, 4,065,054, Cl. 237-8.00R.
John Zink Company: *See—*
Koenig, Ralph A., 4,065,110, Cl. 266-78.000.
Johnsen & Jorgensen (Plastics) Limited: *See—*
Burton, George William, 4,065,017, Cl. 215-211.000.
Johnson, Dwight N. Fluid level control valve. 4,065,095, Cl. 251-118.000.
Johnson, George Michael; Krueger, Kenneth Keith; and Pavlov, Todor, to Shiley Laboratories, Inc. Tracheostomy tube with pressure relief valve. 4,064,882, Cl. 128-351.000.
Johnson, James Edward; Foster, Tom; and Allan, Roy Duncan, to United States of America, National Aeronautics and Space Administration. Variable cycle gas turbine engines. 4,064,692, Cl. 60-261.000.
Johnson & Johnson: *See—*
Oldham, George Ronald, 4,064,883, Cl. 132-93.000.
Johnson, Laurence E.; and Reynolds, Duane S. Method of removing printing press rollers and removal mechanism for use therein. 4,065,102, Cl. 254-186.0HC.
Johnson, Lloyd E. Pressure relief at fuel injection valve upon termination of injection. 4,064,855, Cl. 123-139.0DP.
Johnson, Louis W., to El-Jay, Inc. Impact crusher. 4,065,063, Cl. 241-275.000.
Johnson, William Glen, Sr. Variable frequency oscillator having programmable digital frequency display. 4,065,727, Cl. 331-51.000.
Johnston, Herbert N.; Wray, Joseph A.; Robbins, Joe David; and Schrager, Morton, to Xerox Corporation. Method for fixing ink images. 4,065,304, Cl. 96-1.0LY.
Johnston, Laird E., to General Motors Corporation. Door hold-open mechanism. 4,064,652, Cl. 49-394.000.
Joisten, Siegfried: *See—*
Lippert, Axel; Joisten, Siegfried; and Sajben, Johannes-Otto, 4,065,339, Cl. 156-149.000.
Jonathan Lock Limited: *See—*
Fry, Eric, 4,064,720, Cl. 70-363.000.
Jones, Frederick J. Refuse container. 4,065,051, Cl. 232-43.200.
Jones, John R. Cooking apparatus. 4,064,796, Cl. 99-330.000.
Jones, Thomas H.: *See—*
Muzyczko, Thaddeus M.; and Jones, Thomas H., 4,065,314, Cl. 96-115.00R.
Jones, William B., to General Electric Company. Circuit breaker mounted within an explosion-proof enclosure. 4,065,653, Cl. 200-302.000.
Jordan, Thomas W., to Wescom, Inc. LED Mounting retainer and display. 4,065,198, Cl. 339-17.00D.
Jotterand, Armand, to Sandoz Ltd. Azo compounds having a 3-arylthio- or aliphaticthio-4-cyano- or alkoxycarbonyl-pyrazolyl-5 diazo component radical. 4,065,447, Cl. 260-163.000.
Joullie International: *See—*
Joullie, Maurice; Maillard, Gabriel; Lakah, Lucien; and Warolin, Christian Jean Marie, 4,065,575, Cl. 424-283.000.
Joullie, Maurice; Maillard, Gabriel; Lakah, Lucien; and Warolin, Christian Jean Marie, to Joullie International. 3-Aminomethyl derivatives of 4-chromanone. 4,065,575, Cl. 424-283.000.
Jovanovics, Karola: *See—*
Lorincz, Csaba; Szasz, Kalman; Bolyos, Maria; Jovanovics, Karola; Szporny, Laszlo; Karpati, Egon; and Palosi, Eva, 4,065,458, Cl. 260-293.550.
Judd, David John, to Murphy Chemical Limited. Method of making solid fertilizer herbicide granules. 4,065,289, Cl. 71-82.000.
Judy, Millard Monroe: *See—*
Kendall, Don Leslie; and Judy, Millard Monroe, 4,065,742, Cl. 338-9.000.
Juge, Yvon E.: *See—*
Spinks, Maurice H., Sr.; and Juge, Yvon E., 4,065,092, Cl. 248-503.000.
Jugle, Don B., to Xerox Corporation. Xerographic developer. 4,065,305, Cl. 96-1.0SD.
Jurcenko, John A.: *See—*
Rentmeester, Kenneth R.; Jurcenko, John A.; and Welks, John D., 4,065,023, Cl. 220-75.000.
Kaan, Peter; and Beke, Gunther Rudolf, to Vereinigte Metallwerke Ranshofen-Berndorf Aktiengesellschaft. Exhaust for internal-combustion engine. 4,064,963, Cl. 181-244.000.
Kabushiki Kaisha Komatsu Seisakusho: *See—*
Iida, Akio, 4,065,143, Cl. 280-43.230.
Oota, Shingo, 4,065,082, Cl. 248-9.000.
Kabushiki Kaisha Kyoto Daiichi Kagaku: *See—*
Kawai, Shoji; Nishimura, Kenichi; and Fukuda, Mitsuo, 4,065,358, Cl. 195-127.000.
Kabushiki Kaisha Toyoda Jidoshokki Seisakusho: *See—*
Katoh, Takashi; and Otani, Susumu, 4,064,598, Cl. 19-105.000.
Kaczeus, Steven L., to Storage Technology Corporation. Means and method for clamping a disk pack. 4,065,799, Cl. 360-135.000.
Kaepernick, William A.: *See—*
Wolbrink, David W.; Budyak, Robert J.; Sellinger, Du Wayne M.; and Kaepernick, William A., 4,064,798, Cl. 100-229.00A.
Kaji, Masao: *See—*
Asami, Hiroshi; and Kaji, Masao, 4,065,374, Cl. 204-228.000.
Kallenborn, John, to PPG Industries, Inc. Method and apparatus for collecting strand material. 4,065,065, Cl. 242-18.00G.
Kalmus, Henry P.: *See—*
Apstein, Maurice; and Kalmus, Henry P., 4,064,806, Cl. 102-70.20R.
Kameda, Yukihiko: *See—*
Horii, Satoshi; Kameda, Yukihiko; and Mizokami, Nariakira, 4,065,615, Cl. 536-10.000.
Kamienski, Paul W.: *See—*
Say, Geoffrey R.; Baird, William C., Jr.; and Kamienski, Paul W., 4,065,381, Cl. 208-134.000.
Kaminaka, Nobuyuki: *See—*
Nomura, Noboru; Kanai, Kenji; Kaminaka, Nobuyuki; and Nouchi, Norimoto, 4,065,797, Cl. 360-113.000.
Kanai, Kenji: *See—*
Nomura, Noboru; Kanai, Kenji; Kaminaka, Nobuyuki; and Nouchi, Norimoto, 4,065,797, Cl. 360-113.000.
Kandachi, Takayoshi: *See—*
Chujo, Yoshimasa; and Kandachi, Takayoshi, 4,064,832, Cl. 118-323.000.
Kane Manufacturing Corporation: *See—*
Boeckman, Maynard A.; and Singer, Richard M., 4,064,719, Cl. 70-355.000.
Kaneko, Takashi: *See—*
Iwasaka, Tatsuo; Kaneko, Takashi; and Shimazaki, Seiichi, 4,064,971, Cl. 187-29.00R.
Kann-Rasmussen, Lars Erik: *See—*
Rasmussen, Villum Benedikt Kann; and Kann-Rasmussen, Lars Erik, 4,064,649, Cl. 49-250.000.
Kantor, Ilya Solomonovich: *See—*
Alexandrov, Adolf Moritsovich; Aglitsky, Vladimir Efimovich; Tsimbler, Jury Abramovich; Lurie, Mikhail Vladimirovich; Topolyansky, Jury Arnoldovich; Kantor, Ilya Solomonovich; Chizhikov, Anatoly Petrovich; and Gun, Dmitry Rudolfovich, 4,065,076, Cl. 243-38.000.
Kao, Charles K.; Goell, James E.; and Maklad, Mokhtar S., to International Telephone and Telegraph Corporation. Continuous process for manufacturing optical fibers. 4,065,280, Cl. 65-3.00A.
Kao, James T. F., to Ethyl Corporation. Process for preparing halophosphazene mixtures. 4,065,546, Cl. 423-300.000.
Karay, John. Leg-restraining device for geriatric chair. 4,065,180, Cl. 297-384.000.
Kardashian, Vahram S., to Honeywell Inc. Thin film plated wire magnetic switch of adjustable threshold. 4,065,757, Cl. 365-244.000.
Karol, Frederick John: *See—*
Hamer, Anthony David; and Karol, Frederick John, 4,065,612, Cl. 526-130.000.
Karpati, Egon: *See—*
Lorincz, Csaba; Szasz, Kalman; Bolyos, Maria; Jovanovics, Karola; Szporny, Laszlo; Karpati, Egon; and Palosi, Eva, 4,065,458, Cl. 260-293.550.
Karreman, Jacob: *See—*
Acda, Petrus Marinus; and Karreman, Jacob, 4,065,243, Cl. 425-393.000.
Karrer, Friedrich, to Ciba-Geigy Corporation. Polyphenoxy alkanes. 4,065,508, Cl. 260-613.00R.
Kaser, Rene: *See—*
Siegwart, Hans-Rudolf; and Kaser, Rene, 4,065,098, Cl. 254-29.00A.
Kashio, Toshio, to Casio Computer Co., Ltd. Digital display type timepiece. 4,064,687, Cl. 58-4.00A.
Kashiwazaki, Seiichi, to Hitachi, Ltd. Semiconductor ignition system. 4,064,859, Cl. 123-148.00E.
Kashyap, Satish C.: *See—*
Wong, James Y.; Kashyap, Satish C.; and Dunn, John G., 4,065,655, Cl. 219-10.55D.
Kataoka, Yushin; Harada, Tetsuo; and Takagi, Kenji, to Sumitomo Bayer Urethane Co., Ltd. Purification of organic isocyanates. 4,065,362, Cl. 203-58.000.
Katayama, Shigenari: *See—*
Sasajima, Kikuo; Ono, Keiichi; Nakao, Masaru; Maruyama, Isamu; Katayama, Shigenari; Inaba, Shigeho; and Yamamoto, Hisao, 4,065,565, Cl. 424-250.000.
Kathawala, Faizulla G., to Sandoz, Inc. p-Phenoxy-alkylphenones and corresponding alcohols. 4,065,503, Cl. 260-592.000.
Kato, Fumiaki: *See—*
Matsumoto, Junichiro; Iizuka, Haruhiko; and Kato, Fumiaki, 4,064,844, Cl. 123-32.0EA.
Kato, Takashi, to Toyota Jidosha Kogyo Kabushiki Kaisha. Spark-ignition engine for lean air-fuel mixture. 4,064,860, Cl. 123-191.00S.
Kato, Toshikiyo: *See—*
Yasuda, Tetsuya; Iinuma, Yoshio; Maekawa, Yuzo; Kato, Toshikiyo; and Yoshida, Masaru, 4,064,689, Cl. 58-50.00R.
Kato, Yoshihiro: *See—*
Masui, Akira; Yamada, Kenzo; Ninomiya, Akinori; Tachibana, Katsuhiko; and Kato, Yoshihiro, 4,065,298, Cl. 75-60.000.
Katoh, Takashi; and Otani, Susumu, to Kabushiki Kaisha Toyoda

Jidoshokki Seisakusho. Taker-in-part of the conventional flat card. 4,064,598, Cl. 19-105.000.

Kattner, Lionel E.; Youmans, Albert P.; and Shasby, Patrick J., to Signetics Corporation. Multi-point microprobe for testing integrated circuits. 4,065,717, Cl. 324-158.00P.

Katz, Klaus: *See—*
Bordovsky, Jaromir; and Katz, Klaus, 4,064,789, Cl. 91-417.00R.

Kawabata, Takao, to Mitsubishi Denki Kabushiki Kaisha. Chopper assisted uninterruptible power supply. 4,065,711, Cl. 320-14.000.

Kawabe, Norio: *See—*
Hosoi, Kazuo; Kawabe, Norio; and Ohno, Masaji, 4,065,475, Cl. 260-348.310.

Kawaguchi, Yoshihiko; Harada, Yoshimi; Miki, Makoto; Gouda, Kanenari; Akiyama, Masaharu; Tokura, Masayuki; and Kuroha, Jun. Fluoro-elastomer composition having improved processability. 4,065,419, Cl. 260-28.50D.

Kawai, Shoji; Nishimura, Kenichi; and Fukuda, Mitsuo, to Kabushiki Kaisha Kyoto Daiichi Kagaku. Apparatus for producing reactions in colorimetric cells. 4,065,358, Cl. 195-127.000.

Kawamoto, Akio: *See—*
Kondoh, Teruo; Ban, Kazuhiro; Kawamoto, Akio; Masuno, Yoshiki; and Yoshida, Mitsuhiro, 4,065,768, Cl. 343-9.000.

Kawano, Susumu: *See—*
Amano, Tadashi; Kawano, Susumu; Mano, Kenji; and Irisawa, Takaji, 4,064,727, Cl. 72-179.000.

Kedzierski, Elizabeth. Pad and divider combination. 4,065,021, Cl. 220-22.000.

Keeler, William T.: *See—*
Bergman, John E.; Keeler, William T.; and McKenna, Patrick J., 4,064,658, Cl. 51-110.000.

Keim, Robert E., to General Electric Company. Electric toaster control. 4,065,658, Cl. 219-386.000.

Keller, Richard N.: *See—*
Pokorny. Joseph E.; and Keller, Richard N., 4,064,814, Cl. 108-6 .00.

Kelley Company, Inc.: *See—*
Catlett, John C., 4,064,924, Cl. 160-354.000.

Kellstrom, Erik Magnus, to SKF Industries, Inc. Roller skew control for tapered roller bearings. 4,065,191, Cl. 308-202.000.

Kendall, Don Leslie; and Judy, Millard Monroe, to Texas Instruments Incorporated. Composite semiconductor structures. 4,065,742, Cl. 338-9.000.

Kenny, Bernice S. Integral rain cape and hat. 4,064,562, Cl. 2-84.000.

KeNova AB: *See—*
Nilson, Billy N., 4,065,033, Cl. 222-107.000.

Kesler, Johan Peter: *See—*
Khouw, Boen Tie; and Kesler, Johan Peter, 4,065,355, Cl. 195-66.00R.

Keup, Uwe: *See—*
Frommer, Werner; Gericke, Horst; Keup, Uwe; Puls, Walter; Schmidt, Delt; and Wagner, Otto, 4,065,557, Cl. 424-181.000.

Khosrawi, Mohammad-Ali: *See—*
Hofer, Gerald; Bofinger, Gunter; Nothdurft, Heinz; Khosrawi, Mohammad-Ali; Simon, Helmut; and Konrath, Karl, 4,065,236, Cl. 417-493.000.

Khouw, Boen Tie; and Kesler, Johan Peter, to Canada Packers Limited. Purification of deoxyribonuclease. 4,065,355, Cl. 195-66.00R.

Kiener, Heinz: *See—*
Ernst, Horst Manfred; Olschewski, Armin; Schurger, Rainer; Walter, Lothar; Brandenstein, Manfred; Burkl, Erich; and Kiener, Heinz, 4,065,193, Cl. 308-233.000.

Kikuchi, Yosio; Miyabayashi, Noriyuki; and Wada, Masao, to Nippon-kai Heavy Industries Co., Ltd. Electric dust precipitator. 4,065,275, Cl. 55-121.000.

Killick, Herbert Percy, to C.M.W. Laboratories Limited. Dental units and the like. 4,064,630, Cl. 32-22.000.

Kim, Leo; Paxson, Timm E.; and Tang, Sunny C., to Shell Oil Cómpany. Oxidation process. 4,065,505, Cl. 260-600.00R.

Kim, Sunyong P. Compact shower structure. 4,064,570, Cl. 4-147.000.

Kimura, Kunio: *See—*
Nishino, Atsushi; Sonetaka, Kazunori; and Kimura, Kunio, 4,065,406, Cl. 252-443.000.

Kine-Tech Corporation: *See—*
Mohaupt, Henry H., 4,064,935, Cl. 166-63.000.

King, George; and Hannon, James V., to Pak-A-Matic, Inc. Skin packaging machine with travelling vacuum frame. 4,064,676, Cl. 53-77.000.

King, Robert David; Hiscutt, Robert; and Molineux, Peter, to Triplex Safety Glass Company Limited. Metal oxide films. 4,065,600, Cl. 428-432.000.

King, William E.: *See—*
Wicks, Moye, III; Kubitschek, Hans E.; and King, William E., 4,064,572, Cl. 4-227.000.

Kinlaw, Joe C., to WindoWik Co. Condensate absorption and evaporation assembly. 4,064,666, Cl. 52-171.000.

Kinoshita, Keijiro, to Nissan Motor Co., Ltd. Transmission for single-shaft gas turbine engine. 4,064,958, Cl. 180-66.00A.

Kinoshita, Yoshiro, to Toray Industries, Inc. High tensile strength, high Young's modulus carbon fiber having excellent internal structure homogeneity, and process for producing the same. 4,065,549, Cl. 423-447.400.

Kirk, Donald C., Jr., to VCA Corporation. Actuator cap having a button rotatably between dispensing and non-dispensing positions. 4,065,036, Cl. 222-153.000.

Kisel, Martin W.: *See—*
Bussell, George W.; and Kisel, Martin W., 4,065,425, Cl. 260-33.6EP.

Kishimoto, Jyuji: *See—*
Mikada, Hiroyuki; and Kishimoto, Jyuji, 4,065,803, Cl. 361-88.000.

Kiss, Csaba: *See—*
Rakoczi, Jozsef; Beck, Ivan; Kiss, Csaba; Horvath, Imre; and Nemes, Miklos, 4,065,450, Cl. 260-239.00B.

Kiss, Kornel D., to Dart Industries, Inc. Electrical cables insulated with extraction resistant stabilized material. 4,065,635, Cl. 174-23.00R.

Kistler-Morse Corporation: *See—*
Kistler, Walter P., 4,064,744, Cl. 73-88.50R.

Kistler, Walter P., to Kistler-Morse Corporation. Strain sensorextensiometer. 4,064,744, Cl. 73-88.50R.

Kitagawa, Masahiro: *See—*
Maitani, Yoshihisa; Shimoyama, Kunio; Yoshida, Muneaki; Hashimoto, Akihiko; and Kitagawa, Masahiro, 4,065,777, Cl. 354-23.00R.

Klag, Gunther: *See—*
Spielberger, Georg; Wunderlich, Hermann; Klag, Gunther; and Zlokarnik, Marko, 4,065,492, Cl. 260-508.000.

Kluender, Harold Clinton, to Miles Laboratories, Inc. Depentyl analogues of 11-deoxy-prostaglandin E_1. 4,065,493, Cl. 260-514.00D.

Klusmann, Eugene B.: *See—*
Ditter, Jerome F.; and Klusmann, Eugene B., 4,065,509, Cl. 260-606.50B.

Klyver, Kenneth B.: *See—*
Schneider, John R.; and Klyver, Kenneth B., 4,065,390, Cl. 210-225.000.

Knape, Richard S.; and Lukas, Joseph, to General Motors Corporation. Fuel injection nozzle with compressible valve. 4,065,058, Cl. 239-88.000.

Knapheide Manufacturing Co., The: *See—*
Leaver, John Y. McLeish, 4,064,595, Cl. 16-128.00R.

Knight, Philip A., Jr., to Raytheon Company. Flat plate solar heat collector. 4,064,866, Cl. 126-271.000.

Knoell, Albert C.: *See—*
United States of America, National Aeronautics and Space Administration; Knoell, Albert C.; and Maxwell, Hugh G., 4,064,566, Cl. 3-1.900.

Kobayashi, Mikio; and Nakano, Isamu, to Sekisui Kagaku Kogyo Kabushiki Kaisha. Method and apparatus for producing synthetic resin tube. 4,065,342, Cl. 156-203.000.

Kober, Marvin, to O.K. Machine and Tool Corporation. Wire strip, wrap and unwrap tool. 4,064,581, Cl. 7-14.10R.

Kobzina, John W., to Chevron Research Company. Herbicidal 1-(2-hydroxymethylpyrrolidinyl) carboxanilides. 4,065,291, Cl. 71-95.000.

Koch, Robert B., to Rilsan Corporation. Process for coating fine powders with a nylon and products made therewith. 4,065,519, Cl. 260-857.0TW.

Koehler, Charles. Pressure measuring device. 4,064,759, Cl. 73-409.000.

Koenig, Horst; Prinzbach, Horst; and Schwesinger, Reinhard, to BASF Aktiengesellschaft. 1,3-Didesoxy-1,3-[N,N'-(1',2',3',4'-tetrahydro-1',4'-dioxo)-phthalazino]-inositol compounds. 4,065,454, Cl. 260-250.00P.

Koenig, Ralph A., to John Zink Company. Method and apparatus for purifying blister furnace effluent. 4,065,110, Cl. 266-78.000.

Kohl, Robert F.: *See—*
Heian, Glenn A.; and Kohl, Robert F., 4,065,320, Cl. 106-100.000.

Kojima, Tatsuji: *See—*
Takahashi, Kooji; Kojima, Tatsuji; Ishikawa, Teruo; Nakamura, Kimio; and Ikenaga, Shizuyoshi, 4,065,598, Cl. 428-394.000.

Kokinda, James J.: *See—*
Collins, Jr.; Watson R.; and Kokinda, James J., 4,064,890, Cl. 137-73.000.

Kolthoff, Clyde Paul, Jr.; and Brennolt, Otto J., to International Harvester Company. Radiator air flow control mechanism. 4,064,934, Cl. 165-97.000.

Kominami, Hideyuki: *See—*
Mizukawa, Takumi; Nakamura, Masatatsu; Funakoshi, Kouzi; and Kominami, Hideyuki, 4,065,802, Cl. 361-18.000.

Kondo, Shinichi: *See—*
Umezawa, Hamao; and Kondo, Shinichi, 4,065,495, Cl. 260-534.00M.

Kondo, Yutaka: *See—*
Tanaka, Yutaka; Kondo, Yutaka; and Yamanaka, Akira, 4,065,156, Cl. 280-747.000.

Kondoh, Teruo; Ban, Kazuhiro; Kawamoto, Akio; Masuno, Yoshiki; and Yoshida, Mitsuhiro, to Mitsubishi Denki Kabushiki Kaisha. Radar apparatus. 4,065,768, Cl. 343-9.000.

Konno, Masamitu: *See—*
Takahashi, Yutaka; Hakamata, Yoshio; and Konno, Masamitu, 4,064,677, Cl. 53-123.000.

Kono, Tatsuhiko: *See—*
Ohata, Katsuya; Enomoto, Hiroshi; Yoshikuni, Yoshiaki; Kono, Tatsuhiko; and Yagi, Masahiro, 4,065,562, Cl. 424-267.000.

Konrath, Karl: *See—*
Hofer, Gerald; Bofinger, Gunter; Nothdurft, Heinz; Khosrawi, Mohammad-Ali; Simon, Helmut; and Konrath, Karl, 4,065,236, Cl. 417-493.000.

Koppl, Franz; Griesshammer, Rudolf; and Hamster, Helmut, to Wacker-Chemitronic Gesellschaft fur Elektronik Grundstoffe mbH. Process for the continuous production of silicon rods or tubes by gaseous deposition into a flexible wound band. 4,065,533, Cl. 264-81.000.

Kori, Seiji: *See—*
Hayashi, Masaki; Kori, Seiji; Miyake, Hajimu; and Okada, Takanori, 4,065,632, Cl. 560-55.000.

Korkut, Mehmet D. Torsion spool. 4,065,101, Cl. 254-184.000.

Kornreich, Phillipp G.: *See—*
Kowel, Stephen T.; and Kornreich, Phillipp G., 4,065,791, Cl. 358-213.000.

Koroknay, Laszlo; and Urbantsok, Janos, to Autoipari Kutato Intezet. Anti-jack-knifing apparatus. 4,065,148, Cl. 280-432.000.

Kortusov, Leonid Ivanovich: *See—*
Grigorenko, Anatoly Sergeevich; Kravchenko, Vasily Savelievich; Moroz, Jury Antonovich; Kortusov, Leonid Ivanovich; and Vimba, Vladimir Ivanovich, 4,064,733, Cl. 72-453.030.

Kose, Shigeru. Coiled spring lock washer for socket bolts. 4,064,921, Cl. 151-38.000.

Koslin, Bertram L.: *See—*
Burstein, Albert H.; and Koslin, Bertram L., 4,064,567, Cl. 3-1.910.

Kostner, Armin: *See—*
Gerigk, Gunter; Bittner, Klaus-Jurgen; and Kostner, Armin, 4,064,673, Cl. 53-3.000.

Kowel, Stephen T.; and Kornreich, Phillipp G., to Research Corporation. Interaction of images with strain waves to derive Fourier transform components of the images. 4,065,791, Cl. 358-213.000.

Koziol, Konrad: *See—*
Zollner, Christine; Thiele, Gerhard; Zollner, Dieter; and Koziol, Konrad, 4,065,377, Cl. 204-290.00F.

Krapcho, John; and Turk, Chester F., to E. R. Squibb & Sons, Inc. 2-(2,2,2,-Trifluoroethyl)-3,3a,4,5,6,7-hexahydro-2H-pyrazolo[4,3-c]pyridines. 4,065,617, Cl. 542-450.000.

Krause, Erich, to Universal Maschinenfabrik Dr. Rudolf Schieber KG. Safety device for knitting machine. 4,064,710, Cl. 66-157.000.

Krause, Erich; and Schieber, Hans, to Universal Maschinenfabrik Dr. Rudolf Schieber KG. Safety stopping device for knitting machine. 4,064,711, Cl. 66-157.000.

Krautkramer-Branson, Incorporated: *See—*
Pittaro, Richard J., 4,064,742, Cl. 73-611.000.

Kravchenko, Vasily Savelievich: *See—*
Grigorenko, Anatoly Sergeevich; Kravchenko, Vasily Savelievich; Moroz, Jury Antonovich; Kortusov, Leonid Ivanovich; and Vimba, Vladimir Ivanovich, 4,064,733, Cl. 72-453.030.

Kreb, Robert J., III. Culturing syringe device. 4,065,360, Cl. 195-139.000.

Kretschmer, Felix: *See—*
Mukarovsky, Ladislav; Novak, Artur; and Kretschmer, Felix, 4,064,838, Cl. 119-14.080.

Krieg, Adrian H. Automatic torque controller for an impact wrench. 4,064,771, Cl. 81-52.300.

Kristof, Paul J.; and Rose, Frederick A., to Norland Corporation. Floating point registers for programmed digital instruments. 4,065,664, Cl. 364-487.000.

Kronogard, Sven-Olof, to United Turbine AB & Co. Gas turbine power plant. 4,064,690, Cl. 60-39.16R.

Krueger, Kenneth Keith: *See—*
Johnson, George Michael; Krueger, Kenneth Keith; and Pavlov, Todor, 4,064,882, Cl. 128-351.000.

Kubitschek, Hans E.: *See—*
Wicks, Moye, III; Kubitschek, Hans E.; and King, William E., 4,064,572, Cl. 4-227.000.

Kubota, Katsuyuki; Fujii, Noboru; Yamada, Kouichi; Nakamura, Kimikazu; and Yuuki, Norihito, to Sankyu Inc. Method for constructing a blast furnace. 4,064,616, Cl. 29-429.000.

Kuhl, Henry Y. Apparatus for drying plastic trays. 4,064,635, Cl. 34-58.000.

Kuiper, Ysbrand: *See—*
Dujardin, Esther; Kuiper, Ysbrand; Cremer, Rene; and Sironval, Cyrille, 4,065,310, Cl. 96-27.00R.

Kuist, Charles H.; Squitieri, Vincent; and Seeger, Richard E., to Chomerics, Inc. Isolated paths connector. 4,065,197, Cl. 339-17.00M.

Kuklin, Ivan Alexandrov: *See—*
Sendov, Stoyan Hristov; Nikolov, Ivan Angelov; Kuklin, Ivan Alexandrov; and Mirchev, Mircho Georgiev, 4,065,393, Cl. 210-377.000.

Kulkarni, Avinash D., to Westinghouse Electric Corporation. Regenerative-cycle incandescent lamp containing SnI_4 additive. 4,065,694, Cl. 313-222.000.

Kulsrud, Russell M.: *See—*
Jassby, Daniel L.; and Kulsrud, Russell M., 4,065,351, Cl. 176-5.000.

Kuntz, Emma: *See—*
Miller, Richard; Reich, Murray H.; and Kuntz, Emma, 4,065,537, Cl. 264-143.000.

Kunz, Paul. Apparatus for skinning or peeling produce such as fruits and vegetables. 4,064,794, Cl. 99-474.000.

Kurahashi, Yutaka. Article delivery and unloading device. 4,065,007, Cl. 214-62.00A.

Kurita Water Industries, Ltd.: *See—*
Tsuneki, Takao; Takahashi, Norio; and Tashiro, Hirohisa, 4,065,387, Cl. 210-62.000.

Kuroda, Nobuyuki: *See—*
Miyoshi, Mituji; Matsuura, Kazuo; Kuroda, Nobuyuki; and Ogawa, Shiro, 4,065,611, Cl. 526-124.000.

Kuroha, Jun: *See—*
Kawaguchi, Yoshihiko; Harada, Yoshimi; Miki, Makoto; Gouda, Kanenari; Akiyama, Masaharu; Tokura, Masayuki; and Kuroha, Jun, 4,065,419, Cl. 260-28.50D.

Kurowsky, Stephen R., to Pfizer Inc. Terpolymers of maleic anhydride and their use as scale control agents. 4,065,607, Cl. 526-15.000.

Kurt Matter GmbH K.G.: *See—*
Lehmann, Klaus Dieter, 4,064,899, Cl. 137-269.000.

Kurtz, Robert L., to United States of America, National Aeronautics and Space Administration. Projection system for display of parallax and perspective. 4,065,202, Cl. 350-3.500.

Kushall, Edward L.: *See—*
Wiggins, Douglas G.; and Kushall, Edward L., 4,065,031, Cl. 222-56.000.

Kuykendall, John L.: *See—*
Cvetko, Henry J.; and Kuykendall, John L., 4,065,134, Cl. 274-37.000.

Kyoei Steel Ltd.: *See—*
Nakamura, Shoji, 4,064,930, Cl. 164-82.000.

Kyto, Eero. Cover for the ignition carriage in a sintering plant. 4,065,111, Cl. 266-138.000.

L. A. Steelcraft Products, Inc.: *See—*
Germain, Stanley A., 4,065,099, Cl. 254-164.000.

Labana, Santokh S.; and Theodore, Ares N., to Ford Motor Company. Powder paint blend of epoxy and amide-functional copolymer and anhydride-functional copolymer. 4,065,518, Cl. 260-836.000.

Laboratoires Andre Guerbet: *See—*
Tilly, Guy; Hardouin, Michel Jean Charles; and Lautrou, Jean, 4,065,553, Cl. 424-5.000.
Tilly, Guy; Hardouin, Michel Jean Charles; and Lautrou, Jean, 4,065,554, Cl. 424-5.000.

Lachenmaier, Frank D.: *See—*
Earhart, John E.; Lachenmaier, Frank D.; and McConnell, John E., 4,065,740, Cl. 336-136.000.

Lachowicz, Donald R.; and Holder, Charles B., to Texaco Inc. Acrylate-butadiene graft copolymers and reinforced plastic compositions containing such copolymers. 4,065,521, Cl. 260-879.000.

Ladage, Lawrence; and Holste, Hilary E., to PPG Industries, Inc. Manufacture of alkylated urea or melamine formaldehyde with in-process alcohol recovery. 4,065,267, Cl. 23-263.000.

Laflamme, Daniel. Electronic music display device. 4,064,782, Cl. 84-477.00R.

Lafon, Victor. Sulphur containing arylamine derivatives. 4,065,584, Cl. 424-316.000.

LaForest, John P.: *See—*
Huffman, Jerry P.; LaForest, John P.; Petit, William A.; and Smith, James A., 4,065,081, Cl. 246-34.00R.

LaFrance Precision Casting Company: *See—*
Teti, Joseph A., Jr.; and Peroni, Peter A., 4,064,594, Cl. 16-125.000.

Laing, Nikolaus. Fusion-type thermal storage accumulator with discharging apparatus. 4,064,931, Cl. 165-1.000.

Lakah, Lucien: *See—*
Joullie, Maurice; Maillard, Gabriel; Lakah, Lucien; and Warolin, Christian Jean Marie, 4,065,575, Cl. 424-283.000.

Lake Center Industries: *See—*
Carter, Everett M.; and Quain, Wilbur C., 4,065,649, Cl. 200-5.00A.

Lakerveld, Herman Gerard; and Rietdijk, Johan Adriaan, to U.S. Philips Corporation. Rotary-anode X-ray tube. 4,065,674, Cl. 250-406.000.

Lampert, Ingolf, to Wacker-Chemitronic Gesellschaft fur Elektronik-Grundstoffe mbH. Process for preparing haze free semiconductor surfaces and surfaces so made. 4,064,660, Cl. 51-283.00R.

Lane, John J.: *See—*
Croft, Edward F. B.; and Lane, John J., 4,065,251, Cl. 432-59.000.

Lange, Karl Heinz, to Balda-Werke Photographische Gerate und Kunststoff GmbH & Co., KG. Camera with electronic flash device. 4,065,779, Cl. 354-145.000.

Langford, John R. F., to General Electric Company. Contamination removal method. 4,065,322, Cl. 134-7.000.

Langlois, Roland E., to Owens-Corning Fiberglas Corporation. Method and apparatus for removing particulate pollutants from stack gases. 4,065,274, Cl. 55-89.000.

Lansky, Zdenek J.: *See—*
Rich, Beldon Lee; and Lansky, Zdenek J., 4,064,788, Cl. 91-395.000.

Lapuyade, Robert Henri: *See—*
Godard, Pierre; and Lapuyade, Robert Henri, 4,065,712, Cl. 320-39.000.

Laridon, Urbain Leopold; Delzenne, Gerard Albert; Mader, Helmut; Ulrich, Hans; and Seidel, Bernhard, to AGFA-GEVAERT N.V. Film-forming light-sensitive polymeric material carrying azidosulfonyl groups. 4,065,524, Cl. 260-895.000.

Larock, Richard Craig, to Iowa State University Research Foundation, Inc. Method of synthesis of pi-allyl-palladium compounds. 4,065,479, Cl. 260-429.00L.

Larson, Robert L., to Regis Belt Maintenance Corporation. Method and apparatus for repairing conveyor belts. 4,064,775, Cl. 83-4.000.

Larsson, Hans Gunnar; and Westman, Erik, to Allmanna Svenska Elektriska Aktiebolaget. Hydrostatic extrusion press. 4,064,723, Cl. 72-60.000.

Latsch, Reinhard; and Bianchi, Valerio, to Robert Bosch GmbH. Method and apparatus for controlling an internal combustion engine. 4,064,846, Cl. 123-32.0EA.

Latvala, Bruce Earl: *See—*
Deem, Brian Charles; Markert, Matthew Edward; and Latvala, Bruce Earl, 4,064,973, Cl. 188-71.700.

Lauria, Francesco: *See—*
Doria, Gianfederico; Giraldi, PierNicola; Lauria, Francesco; Corno, Maria Luisa; Sberze, Piero; and Tibolla, Marcello, 4,065,467, Cl. 260-345.200.

Lautrou, Jean: *See—*
Tilly, Guy; Hardouin, Michel Jean Charles; and Lautrou, Jean, 4,065,553, Cl. 424-5.000.
Tilly, Guy; Hardouin, Michel Jean Charles; and Lautrou, Jean, 4,065,554, Cl. 424-5.000.
Lavanish, Jerome M.: *See—*
Sare, Edward J.; and Lavanish, Jerome M., 4,065,543, Cl. 423-240.000.
Lavertu, Roger R.; and Godbout, Antonin, to United States of America, Army. Process for spheroidization of RDX crystals. 4,065,529, Cl. 264-3.00E.
Lavigne, Joe B., to Chevron Research Company. Lactones and ester derivatives thereof. 4,065,424, Cl. 260-31.8DB.
Lawlis, John L.; Rodgers, Bernard L.; and Winkowski, Daniel A., to National Gypsum Company. Facing sheet edge trimming. 4,065,333, Cl. 156-40.000.
Leach, George S., Jr.: *See—*
Reese, Edmund Arthur; Meyer, Charles Shelley; and Leach, George S., Jr., 4,065,678, Cl. 307-237.000.
Leach, Robert M.: *See—*
Satterwhite, William A.; Leach, Robert M.; and Stuhler, Harold A., 4,065,402, Cl. 252-358.000.
Satterwhite, William A.; Leach, Robert M.; and Stuhler, Harold A., 4,065,403, Cl. 252-358.000.
Satterwhite, William A.; Leach, Robert M.; and Stuhler, Harold A., 4,065,404, Cl. 252-358.000.
Leaming, Raymond C. Kit for cleaning tape cartridge playback unit. 4,065,801, Cl. 360-137.000.
Lear Siegler, Inc.: *See—*
Bistrick, Eugene J.; Abrahamsson, Axel B.; Szewczyk, Andrew J.; McCabe, Frank A.; Schlaf, Richard A.; and Gabriele, Leonard A., 4,065,222, Cl. 407-18.000.
Leaver, John Y. McLeish, to Knapheide Manufacturing Co., The. Metal door and hinge construction. 4,064,595, Cl. 16-128.00R.
Lechner, Helmut. Device attachable to power drills for removal of material released during drilling. 4,064,952, Cl. 175-209.000.
Lednicer, Daniel, to Upjohn Company, The. 4-Amino-4-phenylcyclohexanone ketal compositions and process of use. 4,065,573, Cl. 424-278.000.
Lee, Chen-Hsiung, to International Business Machines Corporation. Hybrid fluid jet drop generation. 4,065,774, Cl. 346-140.00R.
Lee, Chien-Ping: *See—*
Gover, Avraham; Samid, Ilan; and Lee, Chien-Ping, 4,065,729, Cl. 331-94.50H.
Lee, Don H.; Weller, Kenneth P.; Ying, Robert S.; and Thrower, William F., to Hughes Aircraft Company. Ion implantation process for fabricating high frequency avalanche devices. 4,064,620, Cl. 29-580.000.
Lee, Frank: *See—*
Coe, Gervase; and Lee, Frank, 4,065,257, Cl. 8-74.000.
Legrand, Richard Webster, to Hercules Incorporated. Thread forming and neck finishing process. 4,065,535, Cl. 264-94.000.
Lehmann, Klaus Dieter, to Kurt Matter GmbH K.G. Control and signal arrangement for respirators. 4,064,899, Cl. 137-269.000.
Leibinsohn, Saul, to Metatech Corporation. Pressure-indicating syringe. 4,064,879, Cl. 128-215.000.
Lemelson, Jerome H. Catapult launched model glider. 4,064,647, Cl. 46-81.000.
Lenard, William; and Taylor, Lynn J., to Owens-Illinois, Inc. Polymeric coating for protection of glass substrate. 4,065,589, Cl. 428-35.000.
Lened, Inc.: *See—*
Palmer, Leonard, 4,064,674, Cl. 53-23.000.
Lenke, Hans-Dieter: *See—*
Emig, Peter; Pohle, Hans; Scheffler, Gerhard; Brock, Norbert; Lenke, Hans-Dieter; and Pohl, Jorg, 4,065,501, Cl. 260-570.600.
L'Eplattenier, Francois; and Vuitel, Laurent, to Ciba-Geigy Corporation. 1:1-Azomethine-metal-complex dyestuffs. 4,065,481, Cl. 260-438.100.
Leroy, Maurice; and Helgorsky, Jacques, to Rhone-Poulenc Industries. Method of defluorinating phosphoric acid. 4,065,547, Cl. 423-321.00S.
Leroy, Pierre; and Sprunck, Emile, to Sprunck, E.; and Creusot-Loire. Rotary connector. 4,065,159, Cl. 285-136.000.
Leshner, Ervin; and Leshner, Michael D., to Fuel Injection Development Corporation. Power indicating means and method for an internal combustion engine. 4,064,748, Cl. 73-117.300.
Leshner, Michael D.: *See—*
Leshner, Ervin; and Leshner, Michael D., 4,064,748, Cl. 73-117.300.
Leskovec, Edward V.; and Porter, Ralph D., to Towmotor Corporation. Hydraulic jack cushioning apparatus. 4,065,112, Cl. 267-34.000.
Letourneur, Jean-Claude; and Jean, Pierre, to GAZ-Transport. Fluid-tight isothermal tank for liquefied gas. 4,065,019, Cl. 220-9.0LG.
Leucht, Rainer: *See—*
Fabian, Frank-Dietrich; and Leucht, Rainer, 4,065,170, Cl. 296-37.100.
Lever Brothers Company: *See—*
Brouwer, Hendrik Willem, 4,065,398, Cl. 252-108.000.
Miles, John J., Jr.; and Netzbandt, William, 4,065,564, Cl. 424-66.000.
Levine, Beth, to Betherb, Inc. Footwear. 4,064,641, Cl. 36-1.500.
Levine, Fred. Shaft adapter. 4,065,219, Cl. 403-287.000.
Lewin, Ian: *See—*
Ruud, Alan J.; and Lewin, Ian, 4,065,667, Cl. 362-217.000.
Lewin, John Edward, to Shiley Laboratories, Inc. Blood oxygenator with integral heat exchanger for regulating the temperature of blood in an extracorporeal circuit. 4,065,264, Cl. 23-258.5BH.
Li, Tsung-tee; Marx, Michael; and Throop, Lewis J., to Syntex (U.S.A.) Inc. 21,21-Dihalo steroids. 4,065,452, Cl. 260-239.55D.
Liberty Vinyl Corporation: *See—*
Winther, Howard Allyn, 4,064,579, Cl. 5-371.000.
Lichtenwald, Roger A., to American Warming and Ventilating Inc. Rainproof louver. 4,064,670, Cl. 52-473.000.
Liebe, Werner: *See—*
Weyde, Edith; von Konig, Anita; and Liebe, Werner, 4,065,312, Cl. 96-50.00R.
Liebman, Theodore. D. C. powered strobe light. 4,065,700, Cl. 315-241.00R.
Life Savers, Inc.: *See—*
Mackay, Donald A. M.; and Schoenholz, Daniel, 4,065,579, Cl. 426-3.000.
Reggio, Richard A.; Friello, Dominick R.; and Beam, John E., 4,065,578, Cl. 426-3.000.
Lillis, William Joseph; and Henry, Paul Mike, to Motorola, Inc. Gain control circuit. 4,065,725, Cl. 330-254.000.
Lindberg, Richard W.: *See—*
Meier, Michael J.; Adams, Edward C.; and Lindberg, Richard W., 4,065,788, Cl. 358-166.000.
Lindeberg, Sven-Erik: *See—*
Lundkvist, Bror Ludvig; Lindeberg, Sven-Erik; and Forsberg, Karl Sievert, 4,065,652, Cl. 200-175.000.
Linden-Alimak AB: *See—*
Andersson, Rickard, 4,064,615, Cl. 29-426.000.
Lindenberg, Hans-Georg; Illmann, Joachim; and Golz, Hans-Joachim, to Varta Batterie Aktiengesellschaft. Clamping of battery plate block assemblies. 4,065,116, Cl. 269-22.000.
Lindgren, Stig Rune, to AB Svenska Flaktfabriken. Cylinder dryer for paper machines. 4,064,637, Cl. 34-122.000.
Linke, Gerhard: *See—*
Ruhrnschopf, Ernst-Peter; and Linke, Gerhard, 4,065,397, Cl. 250-445.00T.
Lipe, Gordon C.: *See—*
Weinstein, Burton A.; and Lipe, Gordon C., 4,065,151, Cl. 280-618.000.
Lipkins, Morton S. Lateral transfer retroreflectors. 4,065,204, Cl. 350-102.000.
Lippert, Axel; Joisten, Siegfried; and Sajben, Johannes-Otto, to Bayer Aktiengesellschaft. Process for producing fibre reinforced plastic tubes with flanges. 4,065,339, Cl. 156-149.000.
Lipson, Melvin A.: *See—*
Yamazaki, Toshio; Cook, Harriet J.; and Lipson, Melvin A., 4,065,315, Cl. 96-48.0QP.
Litzenberg, David P. Motor driven pump. 4,065,231, Cl. 417-357.000.
Lo, Wayne, to General Motors Corporation. Cadmium diffused $Pb_{1-x}Sn_xTe$ diode laser. 4,064,621, Cl. 29-569.00L.
Loch, Emil P., to Westinghouse Electric Corporation. Method of positioning an explosive insert in a vertical tube. 4,064,618, Cl. 29-451.000.
Locker, Daniel; and Miller, Moshe. Drive system for high inertia load. 4,065,702, Cl. 318-161.000.
Loe, Winston C. Combination needle flow control and shut-off valve for precision instruments. 4,064,908, Cl. 137-614.170.
Loftus, John T.: *See—*
Shwayder, Warren M.; and Loftus, John T., 4,064,716, Cl. 70-38.00A.
Logan, Dexter J. Sanitary tubular napkin for males. 4,064,880, Cl. 128-294.000.
Logothètis, Anestis Leonidas, to Du Pont de Nemours, E. I., and Company. Alternating copolymers of alkyl acrylate/ethylene/-branching agents. 4,065,613, Cl. 526-292.000.
Londahl, Dickey Steele: *See—*
Furlong, Donn Breen; and Londahl, Dickey Steele, 4,065,235, Cl. 417-420.000.
London, Arnold, to Motorola, Inc. Amplitude and phase programmable acoustic surface wave matched filter. 4,065,736, Cl. 333-72.000.
Long, Don Wesley: *See—*
Reger, David William; Garber, Murray; and Long, Don Wesley, 4,065,466, Cl. 260-327.00M.
Loos & Schmidt Wilhelm Loos GmbH: *See—*
Loos, Wilhelm, 4,064,585, Cl. 10-130.0WH.
Loos, Wilhelm, to Loos & Schmidt Wilhelm Loos GmbH. Thread cutting machine. 4,064,585, Cl. 10-130.0WH.
L'Oreal: *See—*
Andrillon, Patrick; and Bugaut, Andree, 4,065,255, Cl. 8-10.200.
Lorincz, Csaba; Szasz, Kalman; Bolyos, Maria; Jovanovics, Karola; Szporny, Laszlo; Karpati, Egon; and Palosi, Eva, to Richter Gedeon Vegyeszeti Gyar Rt. Eburnamenine derivatives. 4,065,458, Cl. 260-293.550.
Lorson, Pierre Michel; and Dumas, Bernard Roger, to Societe Nationale des Poudres et Explosifs. Hybrid propellant compositions. 4,065,332, Cl. 149-19.900.
Lou, Kwong-Li. Electronic calculator with switches in solid V- and U-shaped groups. 4,065,650, Cl. 200-5.00R.
Loveless, Frederick C.: *See—*
Farber, Milton; Loveless, Frederick C.; and Peterson, Robert F., Jr., 4,064,922, Cl. 152-347.000.
Lowe Alpine Systems, Inc.: *See—*
Lowe, Greg E.; and Lowe, Michael R., 4,064,665, Cl. 52-155.000.
Lowe, Greg E.; and Lowe, Michael R., to Lowe Alpine Systems, Inc. Ice anchoring method and device. 4,064,665, Cl. 52-155.000.

Lowe, Michael R.: *See—*
Lowe, Greg E.; and Lowe, Michael R., 4,064,665, Cl. 52-155.000.
Lucas Industries Limited: *See—*
Glaze, Stanley George, 4,065,154, Cl. 280-707.000.
Moore, Alan Raymond, 4,065,686, Cl. 310-68.00D.
Lucas, Malcolm Bramel, to Procter & Gamble Company, The. Method of making a precisely partitioned bulbous-shape container. 4,065,536, Cl. 264-98.000.
Ludwig, George C., to Bendix Corporation, The. Vacuum reducer valve. 4,064,894, Cl. 137-116.500.
Luh, Bing Yu: *See—*
Belleau, Bernard R.; Doyle, Terrence W.; Luh, Bing Yu; and Conway, Terry T., 4,065,623, Cl. 544-105.000.
Lukas, Joseph: *See—*
Knape, Richard S.; and Lukas, Joseph, 4,065,058, Cl. 239-88.000.
Lundkvist, Bror Ludvig; Lindeberg, Sven-Erik; and Forsberg, Karl Sievert, to Telefonaktiebolaget L M Ericsson. Contact assembly and mounting structure for cross bar selector switch. 4,065,652, Cl. 200-175.000.
Lundmark, Larry D.; Melby, Allan; and Chun, Ho-ming, to General Mills Chemicals, Inc. High slip polymer composition containing a polyacrylamido sulfonic acid salt and an alcohol. 4,065,422, Cl. 260-29.60E.
Lundquist, Ingemar H., to Syntex Puerto Rico, Inc. Inhalation device. 4,064,878, Cl. 128-206.000.
Lupinski, John H.; Boldebuck, Edith M.; and Barnes, Wilson J., to General Electric Company. Method for making aqueous polyimide electrocoating mixtures. 4,065,420, Cl. 260-29.20N.
Lurie, Mikhail Vladimirovich: *See—*
Alexandrov, Adolf Moritsovich; Aglitsky, Vladimir Efimovich; Tsimbler, Jury Abramovich; Lurie, Mikhail Vladimirovich; Topolyansky, Jury Arnoldovich; Kantor, Ilya Solomonovich; Chizhikov, Anatoly Petrovich; and Gun, Dmitry Rudolfovich, 4,065,076, Cl. 243-38.000.
Lussiez, Guy W.; and Reid, Hugh F., to Amax Inc. Fluidizing means for reducing viscosity of slurries. 4,065,105, Cl. 366-348.000.
Lydiksen, George C., to Simplex Filler Company. Container-filling machine with fill adjustment during operation. 4,065,032, Cl. 222-77.000.
Lyon, LaVerne D.: *See—*
November, Milton H.; and Lyon, LaVerne D., 4,064,739, Cl. 73-32.00A.
Machinefabriek W. Hubert & Co. B.V.: *See—*
Sinnema, Hendrik, 4,065,238, Cl. 425-94.000.
MacInnis, Martin B.; and Quatrini, L. Rita, to GTE Sylvania Incorporated. Fire resistance wood-based boards, process for producing same and compositions useful therefor. 4,065,413, Cl. 260-9.000.
Mackay, Donald A. M.; and Schoenholz, Daniel, to Life Savers, Inc. Long-lasting flavored chewing gum including chalk-containing gum base. 4,065,579, Cl. 426-3.000.
MacKay, Kenneth D.; and Rogier, Edgar R., to General Mills Chemicals, Inc. Certain β-diketones and the use thereof as metal extractants. 4,065,502, Cl. 260-590.00R.
MacLean-Fogg Lock Nut Company: *See—*
Oaks, Daniel V., 4,064,617, Cl. 29-432.100.
MacLean, John P.; and Strickland, John C., to Texaco Inc. Instrument assembly. 4,064,756, Cl. 73-349.000.
MacMaster, Edward, to Rexnord Inc. Container or panel clamp. 4,065,161, Cl. 292-113.000.
Maddock, William Harvard, to Standard Modern Tool Company Limited. Work handling apparatus for center drive lathe. 4,064,774, Cl. 82-45.000.
Mader, Helmut: *See—*
Laridon, Urbain Leopold; Delzenne, Gerard Albert; Mader, Helmut; Ulrich, Hans; and Seidel, Bernhard, 4,065,524, Cl. 260-895.000.
Madison, Vernon Edwin: *See—*
Riegelman, Harry M.; and Madison, Vernon Edwin, 4,064,592, Cl. 16-100.000.
Maeda, Riichi. Centrifugal blasting apparatus. 4,064,661, Cl. 51-424.000.
Maekawa, Yuzo: *See—*
Yasuda, Tetsuya; Iinuma, Yoshio; Maekawa, Yuzo; Kato, Toshikiyo; and Yoshida, Masaru, 4,064,689, Cl. 58-50.00R.
Maeyama, Shigeo, to Tokyo Shibaura Electric Co., Ltd. X-ray tube with a control grid. 4,065,690, Cl. 313-57.000.
Maffrand, Jean-Pierre: *See—*
Heymes, Alain; and Maffrand, Jean-Pierre, 4,065,460, Cl. 260-294.80C.
Heymes, Alan; and Maffrand, Jean-Pierre, 4,065,459, Cl. 260-294.80C.
Magerlein, Barney J., to Upjohn Company, The. 17-Phenyl-18,19,20-trinor-cis-4,5-didehydro-PGE, compounds. 4,065,628, Cl. 560-53.000.
Magerlein, Barney J., to Upjohn Company, The. 17-Phenyl-18,19,20-trinor-cis-4,5-didehydro-PGA_1 compounds. 4,065,629, Cl. 560-5.00B.
Magerlein, Barney J., to Upjohn Company, The. 17-Phenyl-18,19,20-trinor-cis-4,5-didehydro-$PGF_{1\beta}$ compounds. 4,065,631, Cl. 560-55.000.
Magerramova, Zemfira Jusif kyzy: *See—*
Rizaev, Ramiz Gasan Kuli ogly; Mekhtiev, Soltan Dzhafarovich; Magerramova, Zemfira Jusif kyzy; Sheinin, Viktor Efimovich; Mirataev, Mirabdulla Mirakhmed ogly; and Guseinov, Idris Aslan ogly, 4,065,487, Cl. 260-465.00C.
Magers, Wallace Farnholm; Hudson, Larry Lee; and Workman, James Phillip, to Realex Corporation. Pump sprayer. 4,065,038, Cl. 222-321.000.
Maguer, Pierre; and Verveur, Jean, to Etat Francais represente par le Delegue Ministeriel pour l'Armement. Transmitting and receiving multipath sonar antenna utilizing a single acoustic lens. 4,065,748, Cl. 340-9.000.
Magyar, Joseph J., to General Motors Corporation. Seat belt retractor with winding prevention mechanism. 4,065,072, Cl. 242-107.700.
Mahle, Howard C.; and Thomas, Harris B., to Todd & Sargent, Inc.; and Nott Company, part interest to each. Device for loading railroad cars from a grain storage complex. 4,065,005, Cl. 214-41.00R.
Maiese, William M.; and Wax, Richard G., to Merck & Co., Inc. Production of antibiotic FR-02A (efrotomycin) by streptomyces lactamdurans. 4,065,356, Cl. 195-80.00R.
Maietti, Francesca: *See—*
Connizzoli, Mario; Peviani, Camillo; and Maietti, Francesca, 4,064,707, Cl. 62-374.000.
Maillard, Gabriel: *See—*
Joullie, Maurice; Maillard, Gabriel; Lakah, Lucien; and Warolin, Christian Jean Marie, 4,065,575, Cl. 424-283.000.
Mains, Harold E.: *See—*
Foulks, Harold C., Jr.; Rodenberg, Herbert G.; and Mains, Harold E., 4,065,418, Cl. 260-23.0XA.
Maitani, Yoshihisa; Shimoyama, Kunio; Yoshida, Muneaki; Hashimoto, Akihiko; and Kitagawa, Masahiro, to Olympus Optical Company, Ltd. Photometric apparatus for single lens reflex camera. 4,065,777, Cl. 354-23.00R.
Maklad, Mokhtar S.: *See—*
Kao, Charles K.; Goell, James E.; and Maklad, Mokhtar S., 4,065,280, Cl. 65-3.00A.
Malec, Robert E., to Ethyl Corporation. Lubricant additive. 4,065,499, Cl. 260-567.60M.
Malecha, Richard J.: *See—*
Soulsby, John E.; and Malecha, Richard J., 4,064,903, Cl. 137-375.000.
Maloney, Bernard A.: *See—*
Rechlicz, Thomas A.; and Maloney, Bernard A., 4,065,534, Cl. 264-91.000.
Maloney, John Vincent. Adaptable flush attachment for marine engines having side cooling water ports. 4,065,325, Cl. 134-167.00R.
Maltby, Frederick L.: *See—*
Sun, Robert J.; and Maltby, Frederick L., 4,064,753, Cl. 73-304.00C.
Manetta, John A.: *See—*
Gunlock, Donald E.; and Manetta, John A., 4,065,181, Cl. 297-452.000.
Mang, Raymond L.; and Carr, Thomas W., to PPG Industries, Inc. Method of tempering glass sheets of unequal thickness. 4,065,284, Cl. 65-114.000.
Manlove, James C.: *See—*
Allyn, Charles L.; Manlove, James C.; Chang, Gerald M.; and Burmark, Robert C., 4,065,421, Cl. 260-29.40R.
Mannesmann Aktiengesellschaft: *See—*
Gerretz, Richard, 4,064,730, Cl. 72-393.000.
Mano, Kenji: *See—*
Amano, Tadashi; Kawano, Susumu; Mano, Kenji; and Irisawa, Takaji, 4,064,727, Cl. 72-179.000.
Manriquez, Ralph F., to International Computers Limited. Demountable bearing and shaft assembly. 4,065,638, Cl. 178-23.00R.
Mansfield, Henry Timothy. Functional apparatus aid. 4,064,625, Cl. 30-90.000.
Mantz, David. Practice tennis ball and apparatus. 4,065,126, Cl. 273-58.00A.
Marcus, Paul. Injection blow molding apparatus. 4,065,246, Cl. 425-528.000.
Marek, Donald C.: *See—*
Smith, Spencer E.; and Marek, Donald C., 4,064,768, Cl. 74-528.000.
Marforio, Nerino, to Rockwell-Rimoldi S.p.A. Sewing machine base. 4,064,818, Cl. 112-258.000.
Margotte, Dieter: *See—*
Adelmann, Siegfried; Margotte, Dieter; Vernaleken, Hugo; and Nouvertne, Werner, 4,065,436, Cl. 260-47.0XA.
Marine Construction & Design Co.: *See—*
McGrew, Jay L., 4,065,389, Cl. 210-96.00R.
Markert, Matthew Edward: *See—*
Deem, Brian Charles; Markert, Matthew Edward; and Latvala, Bruce Earl, 4,064,973, Cl. 188-71.700.
Marlow, Donald R.: *See—*
Gulick, Joseph F.; and Marlow, Donald R., 4,065,771, Cl. 343-100.0SA.
Marquis, Gerald L., to Dresser Industries, Inc. Method and apparatus for running and retrieving logging instruments in highly deviated well bores. 4,064,939, Cl. 166-253.000.
Marsek, Richard V.: *See—*
Morgan, Robert H., 4,064,721, Cl. 70-416.000.
Martin, Richard L.; and French, Eddie C., to Petrolite Corporation. Hydrogen patch cell. 4,065,373, Cl. 204-195.00C.
Martin, Richard Thomas, Jr.; and Engert, David Michael. Board game apparatus. 4,065,131, Cl. 273-134.00B.
Martinez, D. Manuel Torres. System for automatic coupling or splicing of bobbins, submitting a strip to a continuous feed process for paper manufacturing machines. 4,065,067, Cl. 242-58.100.
Martz, Lyle F., to Westinghouse Electric Corporation. Boiler control providing improved operation with fuels having variable heating values. 4,064,699, Cl. 60-664.000.
Maruyama, Haruyoshi: *See—*
Nakaya, Akira; and Maruyama, Haruyoshi, 4,065,276, Cl. 55-276.000.

Maruyama, Isamu: *See—*
Sasajima, Kikuo; Ono, Keiichi; Nakao, Masaru; Maruyama, Isamu; Katayama, Shigenari; Inaba, Shigeho; and Yamamoto, Hisao, 4,065,565, Cl. 424-250.000.
Marx, Michael: *See—*
Li, Tsung-tee; Marx, Michael; and Throop, Lewis J., 4,065,452, Cl. 260-239.55D.
Maschinenfabrik Hennecke GmbH: *See—*
Althausen, Ferdinand; and Raffel, Reiner, 4,065,106, Cl. 366-76.000.
Mashita, Masao: *See—*
Takeno, Shouzo; Mashita, Masao; and Onodera, Toshihiro, 4,065,734, Cl. 333-30.00R.
Massey-Ferguson Inc.: *See—*
Worback, David L., 4,065,010, Cl. 214-138.00D.
Massey-Ferguson Services N.V.: *See—*
Old, John L., 4,065,009, Cl. 214-131.00A.
Masui, Akira; Yamada, Kenzo; Ninomiya, Akinori; Tachibana, Katsuhiko; and Kato, Yoshihiro, to Nippon Kokan Kabushiki Kaisha. Steel making process by oxygen top-blown converter. 4,065,298, Cl. 75-60.000.
Masumoto, Hakaru; and Murakami, Yuetsu, to Foundation: The Research Institute of Electric and Magnetic Alloys, The. Wear-resistant high-permeability alloy. 4,065,330, Cl. 148-31.550.
Masuno, Yoshiki: *See—*
Kondoh, Teruo; Ban, Kazuhiro; Kawamoto, Akio; Masuno, Yoshiki; and Yoshida, Mitsuhiro, 4,065,768, Cl. 343-9.000.
Matsumoto, Junichiro; Iizuka, Haruhiko; and Kato, Fumiaki, to Nissan Motor Co., Ltd. Apparatus and method for successively inactivating the cylinders of an electronically fuel-injected internal combustion engine in response to sensed engine load. 4,064,844, Cl. 123-32.0EA.
Matsumoto, Mitsuo, to Tokyo Shibaura Electric Co., Ltd. Multi-processing system for controlling microcomputers and memories. 4,065,809, Cl. 364-200.000.
Matsuo, Tohru: *See—*
Sasaki, Kantaro; Ikeda, Takami; Matsuo, Tohru; and Okazaki, Takashi, 4,065,297, Cl. 75-52.000.
Matsuoka, Takeji. Coil actuating apparatus in a coil spring making machine. 4,064,732, Cl. 72-449.000.
Matsushita Electric Industrial Co., Ltd.: *See—*
Inoue, Toshitugu; Nakamura, Takuji; Onoda, Tadayuki; and Nakatugawa, Tatuo, 4,065,792, Cl. 358-286.000.
Mizukawa, Takumi; Nakamura, Masatatsu; Funakoshi, Kouzi; and Kominami, Hideyuki, 4,065,802, Cl. 361-18.000.
Nishino, Atsushi; Sonetaka, Kazunori; and Kimura, Kunio, 4,065,406, Cl. 252-443.000.
Nomura, Noboru; Kanai, Kenji; Kaminaka, Nobuyuki; and Nouchi, Norimoto, 4,065,797, Cl. 360-113.000.
Torigoe, Masao; Mori, Kunihito; Tsuchiya, Mitsuru; and Takemura, Seiji, 4,065,233, Cl. 417-368.000.
Matsuura, Kazuo: *See—*
Miyoshi, Mituji; Matsuura, Kazuo; Kuroda, Nobuyuki; and Ogawa, Shiro, 4,065,611, Cl. 526-124.000.
Matthews, Joseph S.: *See—*
Bacha, John D.; Matthews, Joseph S.; and Selwitz, Charles M., 4,065,470, Cl. 260-346.750.
Mattia, Armand D. Pulpit elevating and lowering system. 4,065,194, Cl. 312-247.000.
Mattison, Phillip L., to General Mills Chemicals, Inc. 5-Halogen-substituted 7 alkyl and 7-alkenyl 8-hydroxyquinolines. 4,065,455, Cl. 260-289.0XA.
Matuoka, Tosimitu: *See—*
Nakagawa, Yasuhiko; Sasaki, Masahiro; Ito, Teruyuki; and Matuoka, Tosimitu, 4,064,850, Cl. 123-75.00B.
Matzner, Markus: *See—*
Bailey, Frederick Eugene; von Dohlen, Werner Claus; Matzner, Markus; Young, Robert Hayward; and Robeson, Lloyd Mahlon, 4,065,520, Cl. 260-878.00B.
Mauney, Harold D. Clip assembly for ceiling track railings. 4,065,090, Cl. 248-318.000.
Maxwell, Albert H., Jr., to Westinghouse Electric Corporation. Translator for processing meter telemetry recording containing power loss pulses. 4,065,793, Cl. 360-6.000.
Maxwell, Hugh G.: *See—*
United States of America, National Aeronautics and Space Administration; Knoell, Albert C.; and Maxwell, Hugh G., 4,064,566, Cl. 3-1.900.
May, Ralph Forrest, to Du Pont de Nemours, E. I., and Company. Inhibition of crystallization of O-ethyl-O-(4-nitrophenyl)-phenylphosphonothioate. 4,065,525, Cl. 260-989.000.
Mayer, Karl Heinrich; Hoffmeister, Friedrich; and Wuttke, Wolfgang, to Bayer Aktiengesellschaft. 3-Carbo(lower alkoxy)hydrazinoindazoles. 4,065,568, Cl. 424-273.00P.
Mayeux, Christian; Micheron, Francois; and Vasseur, Jean Pierre, to Thomson-CSF. Device for detecting X-ray radiation. 4,065,671, Cl. 250-370.000.
Mazie, Lowell I.; Friedman, Henry C.; Getzler, Nathaniel; and Grollman, Jack D. Display container. 4,064,988, Cl. 206-44.00R.
Mazza, Anthony J., Jr.: *See—*
Cummings, Thomas R.; and Mazza, Anthony J., Jr., 4,064,640, Cl. 35-12.00K.
McAllister, Patrick Von, to Hercules Incorporated. Solar energy absorber. 4,065,592, Cl. 428-92.000.
McBride, Edward D., to Outboard Marine Corporation. Flywheel assembly ring gear guard. 4,064,765, Cl. 74-6.000.
McBride, Stuart Livingstone: *See—*
Hutchison, Thomas Sherret; and McBride, Stuart Livingstone, 4,064,735, Cl. 73-1.00R.
McCabe, Frank A.: *See—*
Bistrick, Eugene J.; Abrahamsson, Axel B.; Szewczyk, Andrew J.; McCabe, Frank A.; Schlaf, Richard A.; and Gabriele, Leonard A., 4,065,222, Cl. 407-18.000.
McCaully, Ronald J.; Nudelman, Abraham; and Bell, Stanley C., to American Home Products. 1,3-Dihydro-3-hydroxy-5-phenyl-2H-1,4-benzodiazepin-2-one, substituted diamino acetate esters and their acid salts. 4,065,451, Cl. 260-239.30D.
McClelland, Donald H.: *See—*
Hug, Leonard F.; McClelland, Donald H.; and Uba, Toshio, 4,064,725, Cl. 72-147.000.
McClure, James D.; and Brandenberger, Stanley G., to Shell Oil Company. Alkane isomerization process using a supported perfluorinated polymer catalyst. 4,065,515, Cl. 260-683.680.
McClure, L. C. Chemical treating system for oil wells. 4,064,936, Cl. 166-75.00R.
McClure, William C. Message signaling and alerting system and method thereof. 4,065,642, Cl. 179-18.00B.
McClure, William F.; and Brown, David L. Apparatus for fire extinguishing system for floating-roof tanks. 4,064,944, Cl. 169-60.000.
McConnell, John E.: *See—*
Earhart, John E.; Lachenmaier, Frank D.; and McConnell, John E., 4,065,740, Cl. 336-136.000.
McCullough, John E., to Arthur D. Little, Inc. Scroll-type apparatus with hydrodynamic thrust bearing. 4,065,279, Cl. 62-510.000.
McDonnell Douglas Corporation: *See—*
Meier, Michael J.; Adams, Edward C.; and Lindberg, Richard W., 4,065,788, Cl. 358-166.000.
McGraw-Edison Company: *See—*
Yount, Ronald E.; and Bell, Robert A., 4,065,659, Cl. 219-398.000.
McGrew, Jay L., to Marine Construction & Design Co. Apparatus for detecting proportion of oil in oil/water mixtures. 4,065,389, Cl. 210-96.00R.
McIntosh Laboratory, Inc.: *See—*
Evans, Ronald C., 4,065,682, Cl. 307-261.000.
McKee Bros. Limited: *See—*
Heslop, Lorne C., 4,065,062, Cl. 241-101.700.
McKenna, Patrick J.: *See—*
Bergman, John E.; Keeler, William T.; and McKenna, Patrick J., 4,064,658, Cl. 51-110.000.
McMillan, William D., to Caterpillar Tractor Co. Hydraulic control for variable displacement pumps. 4,065,228, Cl. 417-212.000.
McMurdo Instrument Company Limited, The: *See—*
Casson, William Ernest, 4,065,606, Cl. 429-198.000.
McVey, Charles I., to General Electric Company. Ceramic lamp having electrodes supported by crimped tubular inlead. 4,065,691, Cl. 313-174.000.
Mealing, Barrie Ewart: *See—*
Gosling, Alexander Benett; and Mealing, Barrie Ewart, 4,065,706, Cl. 318-254.000.
Megowen, William J.; and Cohen, Harvey M., to Megowen, William J. Closure means and method. 4,065,018, Cl. 215-231.000.
Meier, Hans, to Joh. Vaillant KG. Circulating water heater. 4,065,054, Cl. 237-8.00R.
Meier, Michael J.; Adams, Edward C.; and Lindberg, Richard W., to McDonnell Douglas Corporation. Realtime image processor. 4,065,788, Cl. 358-166.000.
Meister, Pierre-Andre: *See—*
Erni, Bruno; and Meister, Pierre-Andre, 4,065,651, Cl. 200-5.00A.
Mekhtiev, Soltan Dzhafarovich: *See—*
Rizaev, Ramiz Gasan Kuli ogly; Mekhtiev, Soltan Dzhafarovich; Magerramova, Zemfira Jusif kyzy; Sheinin, Viktor Efimovich; Mirataev, Mirabdulla Mirakhmed ogly; and Guseinov, Idris Aslan ogly, 4,065,487, Cl. 260-465.00C.
Melby, Allan: *See—*
Lundmark, Larry D.; Melby, Allan; and Chun, Ho-ming, 4,065,422, Cl. 260-29.60E.
Mendoza, Vicente A.: *See—*
Straitz, John F., III; and Mendoza, Vicente A., 4,065,248, Cl. 431-202.000.
Mercik, Henry J., Jr.; and Armstrong, Lee R., to United Technologies Corporation. Parameter controlled speed determination in internal combustion engine diagnostics. 4,064,746, Cl. 73-116.000.
Merck & Co., Inc.: *See—*
Atkinson, Joseph George; Rooney, Clarence Stanley; Girard, Yves; and Engelhardt, Edward L., 4,065,572, Cl. 424-273.00R.
Denny, George H.; and Saari, Walfred S., 4,065,464, Cl. 260-326.150.
Denny, George H., 4,065,465, Cl. 260-326.150.
Grier, Nathaniel; Dybas, Richard A.; and Strelitz, Robert A., 4,065,497, Cl. 260-563.00P.
Hurni, William M., 4,065,359, Cl. 195-127.000.
Maiese, William M.; and Wax, Richard G., 4,065,356, Cl. 195-80.00R.
Merck Patent Gesellschaft mit beschrankter Haftung: *See—*
Steinstrasser, Rolf; and Del Pino, Fernando, 4,065,489, Cl. 560-59.000.
Meredith, Hayden Gwyn, to Rocket of London Limited. Surgical clip applicator. 4,064,881, Cl. 128-325.000.
Merila, John B. Paper napkin dispenser. 4,065,028, Cl. 221-36.000.
Merrill, Cleon C.: *See—*
Borgen, Arden L.; and Merrill, Cleon C., 4,064,895, Cl. 137-216.000.

Merz, Kenneth M.: *See—*
Wahlers, Richard L.; and Merz, Kenneth M., 4,065,743, Cl. 338-308.000.
Meshulam, Avram; and Rebold, Jerome I., to CBS Inc. Cutter for sheet material. 4,064,626, Cl. 30-287.000.
Messerschmitt-Bolkow-Blohm Gesellschaft mit beschrankter Haftung: *See—*
Seilstorfer, Helmut; Wittich, Willibald, deceased; and Messerschmitt-Bolkow-Blohm GmbH, legal representative, 4,065,303, Cl. 75-226.000.
Messerschmitt-Bolkow-Blohm GmbH, legal representative: *See—*
Seilstorfer, Helmut; Wittich, Willibald, deceased; and Messerschmitt-Bolkow-Blohm GmbH, legal representative, 4,065,303, Cl. 75-226.000.
Messinger Bearings, Inc.: *See—*
Sague, John E., 4,065,192, Cl. 308-215.000.
Mesur-Matic Electronics Corporation: *See—*
Newell, Harold R., 4,065,685, Cl. 310-49.00R.
Metaframe Corporation: *See—*
Rodemeyer, Donald James; and Hruby, John Eugene, 4,064,839, Cl. 119-15.000.
Metallgesellschaft Aktiengesellschaft: *See—*
Rudolph, Paul, 4,065,273, Cl. 55-50.000.
Weckesser, Ernst; Sparwald, Volker; Reh, Lothar; Bohm, Eberhard; and Graf, Rolf, 4,065,271, Cl. 55-2.000.
Metatech Corporation: *See—*
Leibinsohn, Saul, 4,064,879, Cl. 128-215.000.
Metex Corporation: *See—*
Severinsen, John, 4,065,138, Cl. 277-230.000.
Methode Electronics, Inc.: *See—*
Andre, Michael G.; Schmidt, Melvin J.; and Osman, Kenneth L., 4,065,199, Cl. 339-17.00F.
Metzeler Schaum GmbH: *See—*
Brendel, Hugo; and Federau, Heinz, 4,065,245, Cl. 425-503.000.
Meyer, Charles Shelley: *See—*
Reese, Edmund Arthur; Meyer, Charles Shelley; and Leach, George S., Jr., 4,065,678, Cl. 307-237.000.
Micheron, Francois; Doriath, Gerard; and Spitz, Eric, to Thomson-CSF. Electrically controlled switching device. 4,065,677, Cl. 307-112.000.
Micheron, Francois: *See—*
Mayeux, Christian; Micheron, Francois; and Vasseur, Jean Pierre, 4,065,671, Cl. 250-370.000.
Micron Instruments: *See—*
Harrison, Arthur Michael, 4,064,758, Cl. 73-398.0AR.
Midland-Ross Corporation: *See—*
Hemsath, Klaus H.; and Vereecke, Frank J., 4,065,252, Cl. 432-77.000.
Mientus, James A.: *See—*
Cramer, Robert L.; Dunbar, Jack E.; and Mientus, James A., 4,064,875, Cl. 128-142.200.
Mihirogi, Kiyoshi: *See—*
Nakamura, Shinji; and Mihirogi, Kiyoshi, 4,064,808, Cl. 104-148.0MS.
Mikada, Hiroyuki; and Kishimoto, Jyuji, to Canon Kabushiki Kaisha. Electronic device for preventing undesirable effect resulting from voltage fluctuation. 4,065,803, Cl. 361-88.000.
Miki, Makoto: *See—*
Kawaguchi, Yoshihiko; Harada, Yoshimi; Miki, Makoto; Gouda, Kanenari; Akiyama, Masaharu; Tokura, Masayuki; and Kuroha, Jun, 4,065,419, Cl. 260-28.50D.
Milburn, Ralph N. Vacuum contact printer. 4,065,210, Cl. 355-91.000.
Miles, Barry Donald Ruberry: *See—*
Owen, David Peter; and Miles, Barry Donald Ruberry, 4,065,787, Cl. 358-160.000.
Miles, John J., Jr.; and Netzbandt, William, to Lever Brothers Company. Antiperspirant solution containing a substantially non-volatile siloxane liquid. 4,065,564, Cl. 424-66.000.
Miles Laboratories, Inc.: *See—*
Kluender, Harold Clinton, 4,065,493, Cl. 260-514.00D.
Miley, Frederick: *See—*
Jenkins, Stanley Frederick Noel; Fairclough, Roy; Howard, Brian Arthur; and Miley, Frederick, 4,065,078, Cl. 244-104.0FP.
Miller, Charles G.: *See—*
Fletcher, James C.; Miller, Charles G.; and Stephens, James B., 4,065,053, Cl. 237-1.00A.
Miller-Holzwarth, Inc.: *See—*
Tausch, Gerald, 4,065,206, Cl. 350-301.000.
Miller, Homer R.: *See—*
Hicks, William R.; and Miller, Homer R., 4,065,705, Cl. 318-245.000.
Miller, Moshe: *See—*
Locker, Daniel; and Miller, Moshe, 4,065,702, Cl. 318-161.000.
Miller, Richard; Reich, Murray H.; and Kuntz, Emma, to Princeton Chemical Research, Inc. Process for producing molded golf balls exhibiting isometric compression. 4,065,537, Cl. 264-143.000.
Miller, Richard H., to PPG Industries, Inc. Process for removing acetylene from hydrogen chloride gas. 4,065,513, Cl. 260-656.00R.
Miller, Robert C.: *See—*
Grasselli, Robert K.; Suresh, Dev D.; and Miller, Robert C., 4,065,468, Cl. 260-346.750.
Miller, William H., Jr.; and Geary, Carl H., to Carrier Corporation. Shaft seal assembly for a rotary machine. 4,065,136, Cl. 277-3.000.
Milwaukee Faucets, Inc.: *See—*
Schmitt, William C., 4,064,900, Cl. 137-315.000.
Minami, Isao: *See—*
Morimoto, Shiro; Nomura, Hiroaki; Fugono, Takeshi; and Minami, Isao, 4,065,619, Cl. 544-25.000.
Minden, Henry T., to Sperry Rand Corporation. Laser optical coupler. 4,065,730, Cl. 331-94.50H.
Minnesota Mining & Manufacturing Company: *See—*
Paul, Fred R., Jr., 4,065,753, Cl. 340-152.00T.
Minolta Camera Kabushiki Kaisha: *See—*
Imaizumi, Masaru; and Inagaki, Syotaro, 4,065,120, Cl. 271-174.000.
Mirataev, Mirabdulla Mirakhmed ogly: *See—*
Rizaev, Ramiz Gasan Kuli ogly; Mekhtiev, Soltan Dzhafarovich; Magerramova, Zemfira Jusif kyzy; Sheinin, Viktor Efimovich; Mirataev, Mirabdulla Mirakhmed ogly; and Guseinov, Idris Aslan ogly, 4,065,487, Cl. 260-465.00C.
Mirchev, Mircho Georgiev: *See—*
Sendov, Stoyan Hristov; Nikolov, Ivan Angelov; Kuklin, Ivan Alexandrov; and Mirchev, Mircho Georgiev, 4,065,393, Cl. 210-377.000.
Mirtain, Henri J., to Uniroyal. Raw pneumatic tire carcass and method of fabricating same. 4,065,338, Cl. 156-123.00R.
Mishiro, Shoji, to Taga Electric Co., Ltd. Supersonic vibrator with means for detecting vibrating speed. 4,065,687, Cl. 310-314.000.
Mitchell, Richard F.: *See—*
Palfreeman, John S.; Redwood, Martin; Smith, Frederick W.; and Mitchell, Richard F., 4,065,735, Cl. 333-72.000.
Mitsubishi Chemical Industries, Ltd.: *See—*
Yamawaki, Takeshi; Uchida, Takanori; and Nakajima, Makoto, 4,065,426, Cl. 260-33.6AQ.
Mitsubishi Denki Kabushiki Kaisha: *See—*
Kawabata, Takao, 4,065,711, Cl. 320-14.000.
Kondoh, Teruo; Ban, Kazuhiro; Kawamoto, Akio; Masuno, Yoshiki; and Yoshida, Mitsuhiro, 4,065,768, Cl. 343-9.000.
Mitsubishi Jidosha Kogyo Kabushiki Kaisha: *See—*
Yamanaka, Akira, 4,065,169, Cl. 296-35.00R.
Mitumori, Yoshio: *See—*
Shigemori, Youjiro; and Mitumori, Yoshio, 4,065,733, Cl. 331-112.000.
Miura, Genmei; and Takeshita, Kanou, to Canon Kabushiki Kaisha. Input device for processing system probe controlled. 4,065,754, Cl. 340-166.00R.
Miyabayashi, Noriyuki: *See—*
Kikuchi, Yosio; Miyabayashi, Noriyuki; and Wada, Masao, 4,065,275, Cl. 55-121.000.
Miyagawa, Takahito: *See—*
Uno, Keiichi; and Miyagawa, Takahito, 4,065,439, Cl. 260-75.00R.
Miyagishima, Tosh, to Hydril Company. Well line strap connection. 4,064,601, Cl. 24-16.0PB.
Miyake, Hajimu: *See—*
Hayashi, Masaki; Kori, Seiji; Miyake, Hajimu; and Okada, Takanori, 4,065,632, Cl. 560-55.000.
Miyoshi, Mituji; Matsuura, Kazuo; Kuroda, Nobuyuki; and Ogawa, Shiro, to Nippon Oil Company Limited. Process for the production of polyolefins. 4,065,611, Cl. 526-124.000.
Mizikar, David M.: *See—*
Schanzenbach, George P., Jr.; and Mizikar, David M., 4,064,764, Cl. 74-2.000.
Mizoguchi, Toshiyuki: *See—*
Nishiumi, Shiro; Hasegawa, Shoichi; Mizoguchi, Toshiyuki; and Furuta, Sachiko, 4,065,599, Cl. 428-402.000.
Mizokami, Nariakira: *See—*
Horii, Satoshi; Kameda, Yukihiko; and Mizokami, Nariakira, 4,065,615, Cl. 536-10.000.
Mizukawa, Takumi; Nakamura, Masatatsu; Funakoshi, Kouzi; and Kominami, Hideyuki, to Matsushita Electric Industrial Co., Ltd. Inverter circuit for induction heating cooking ovens with a protection device. 4,065,802, Cl. 361-18.000.
Moberg, Carl Ake: *See—*
Bratt, Sven Ake; and Moberg, Carl Ake, 4,064,948, Cl. 173-12.000.
Moffitt, John Stuart: *See—*
Arrasmith, Fred Victor; Bruns, Donald George; Moffitt, John Stuart; and Moss, Stanton Kline, 4,065,123, Cl. 271-215.000.
Moggi, Pietro Antonio; and Iori, Giuseppe, to ANIC, S.p.A. Process for the synthesis of dibenzofuran. 4,065,469, Cl. 260-346.710.
Mohaupt, Henry H., to Kine-Tech Corporation. Oil well stimulation apparatus. 4,064,935, Cl. 166-63.000.
Molineux, Peter: *See—*
King, Robert David; Hiscutt, Robert; and Molineux, Peter, 4,065,600, Cl. 428-432.000.
Molins Machine Company, Inc.: *See—*
Rejai, Jamshid, 4,065,122, Cl. 271-201.000.
Molnlycke AB: *See—*
Aberg, Sven Ulrik Torbjorn; and Bergdahl, Sven Gunnar, 4,065,347, Cl. 162-26.000.
Monsanto Company: *See—*
Campbell, Robert H.; and Wise, Raleigh W., 4,065,443, Cl. 260-79.50B.
Deets, Gary L., 4,065,428, Cl. 260-45.75B.
Osborne, Franklin T., 4,065,399, Cl. 252-182.000.
Montgomery Elevator Company: *See—*
Seaholm, Reuel A., 4,064,667, Cl. 52-204.000.
Montgomery, William H., to Aqua Plex Products. Self-contained aquarium system. 4,064,837, Cl. 119-5.000.
Monticelli, Dennis M., to National Semiconductor Corporation. Photodiode operational amplifier. 4,065,668, Cl. 250-214.00P.
Moon, Malcolm W.; and Sharp, John C., to Upjohn Company, The.

Nutro Patentverwertungs-und Maschinen-Handels GmbH: *See—*
Grocke, Diethelm, 4,064,678, Cl. 53-183.000.
N.V. Bekaert S.A.: *See—*
Buyssens, Noel; and Verbauwhede, Germain, 4,064,915, Cl. 139-425.00R.
Nyman, Curt Lennart. Apparatus for and method of inspecting tubular textile goods. 4,065,213, Cl. 356-200.000.
O.K. Machine and Tool Corporation: *See—*
Kober, Marvin, 4,064,581, Cl. 7-14.10R.
Oaks, Daniel V., to MacLean-Fogg Lock Nut Company. Die assembly and method for clinching fasteners to panels. 4,064,617, Cl. 29-432.100.
O'Brien, Rory Morgan, to Alfred Herbert Limited. Apparatus for displaying a band representation of a signal. 4,065,716, Cl. 324-96.000.
Occidental Petroleum Corporation: *See—*
Morey, Booker W., 4,065,282, Cl. 65-28.000.
Oda, Eisuke: *See—*
Shii, Hikaru; and Oda, Eisuke, 4,065,594, Cl. 428-113.000.
Oda, Yoshio; Suhara, Manabu; and Endo, Eiji, to Asahi Glass Co., Ltd. Process for producing alkali metal hydroxide. 4,065,366, Cl. 204-98.000.
Ogawa, Kazuyuki; Hirose, Masahiko; Shibagaki, Masahiro; Murakami, Yoshio; and Horiike, Yasuhiro, to Tokyo Shibaura Electric Co., Ltd. Activated gas reaction apparatus & method. 4,065,369, Cl. 204-164.000.
Ogawa, Naoki: *See—*
Abe, Fumiyuki; Ikawa, Kazuo; Ehama, Mituo; and Ogawa, Naoki, 4,065,157, Cl. 280-751.000.
Ogawa, Shiro: *See—*
Miyoshi, Mituji; Matsuura, Kazuo; Kuroda, Nobuyuki; and Ogawa, Shiro, 4,065,611, Cl. 526-124.000.
Ogden, Ralph. Torch cutting machine and drive control arrangement therefor. 4,065,109, Cl. 266-69.000.
Oh, John H.: *See—*
Oita, Katashi; San Clemente, Marion R.; Oh, John H.; and Tiedeman, George T., 4,065,576, Cl. 424-318.000.
Oita, Katashi; San Clemente, Marion R.; Oh, John H.; and Tiedeman, George T., 4,065,577, Cl. 424-333.000.
Ohashi, Katsuji. Rotary speed minute regulating device for output shaft in puller apparatus. 4,065,043, Cl. 226-141.000.
Ohata, Katsuya; Enomoto, Hiroshi; Yoshikuni, Yoshiaki; Kono, Tatsuhiko; and Yagi, Masahiro, to Nippon Shinyaku Co., Ltd. Method and composition for reducing blood glucose levels. 4,065,562, Cl. 424-267.000.
Ohguchi, Masakatsu: *See—*
Igeta, Kikuji; and Ohguchi, Masakatsu, 4,065,256, Cl. 8-115.500.
Ohkawara Mfg., Co., Ltd.: *See—*
Okawara, Kahei, 4,064,831, Cl. 118-303.000.
Ohnaka, Makoto, to Shiroyama Kogyo Co., Ltd. Manipulator. 4,065,001, Cl. 214-1.0BV.
Ohno, Masaji: *See—*
Hosoi, Kazuo; Kawabe, Norio; and Ohno, Masaji, 4,065,475, Cl. 260-348.310.
Ohtani, Kiyoshi; and Takamiya, Kikuzo, to Bridgestone Cycle Co. Ltd. Caliper brake for bicycles for maintaining equal distance between both brake shoes and a wheel therebetween. 4,064,972, Cl. 188-24.000.
Oita, Katashi; San Clemente, Marion R.; Oh, John H.; and Tiedeman, George T., to Weyerhaeuser Company. Method for using a ruminant repellent comprising oxidation precursors of aliphatic aldehydes. 4,065,576, Cl. 424-318.000.
Oita, Katashi; San Clemente, Marion R.; Oh, John H.; and Tiedeman, George T., to Weyerhaeuser Company. Method for using a ruminant repellent comprising aliphatic aldehydes. 4,065,577, Cl. 424-333.000.
Okada, Naotake; and Iwabuchi, Takeshi, to Nissan Chemical Industries Ltd. Flame retardant polysulfone composition. 4,065,517, Cl. 260-823.000.
Okada, Takanori: *See—*
Hayashi, Masaki; Kori, Seiji; Miyake, Hajimu; and Okada, Takanori, 4,065,632, Cl. 560-55.000.
Okami, Eiryo, to Yoshida Kogyo K.K. Method of producing precast concrete panels with built-in outer sash frames. 4,065,540, Cl. 264-278.000.
Okawara, Kahei, to Ohkawara Mfg., Co., Ltd. Device for coating granular solids. 4,064,831, Cl. 118-303.000.
Okazaki, Takashi: *See—*
Sasaki, Kantaro; Ikeda, Takami; Matsuo, Tohru; and Okazaki, Takashi, 4,065,297, Cl. 75-52.000.
Okigami, Noboru; Sekiguchi, Yoshitoshi; Ito, Takusen; and Onose, Kenji, to Hitachi Shipbuilding and Engineering Co., Ltd. Apparatus for incinerating waste gases. 4,065,247, Cl. 431-202.000.
Old, John L., to Massey-Ferguson Services N.V. Material handling apparatus. 4,065,009, Cl. 214-131.00A.
Oldham, George Ronald, to Johnson & Johnson. Dental floss threader with locking means. 4,064,883, Cl. 132-93.000.
Olevsky, Viktor Markovich: *See—*
Evkin, Ivan Frolovich; Petrov, Vladimir Alexandrovich; Olevsky, Viktor Markovich; Ruchinsky, Vitaly Rafael-Abovich; Bushev, Vladimir Semenovich; and Tatyanchikov, Valentin Alexeevich, 4,065,346, Cl. 159-6.00R.
Oliveira, Joseph P., II. Touch-Tone encoder unit for mobile radio transmitter. 4,065,755, Cl. 340-171.0PF.
Oliver Machinery Company: *See—*
Nelson, John W., 4,065,249, Cl. 432-8.000.
Oliver Technik AG: *See—*
Rouiller, Jean Marie, 4,065,640, Cl. 179-7.1TP.
Olmsted, Bernie A., to Package Machinery Company. Non-return valve for mottle charge in plastic injection molding machine. 4,065,108, Cl. 366-76.000.
Olschewski, Armin: *See—*
Ernst, Horst Manfred; Olschewski, Armin; Schurger, Rainer; Walter, Lothar; Brandenstein, Manfred; Burkl, Erich; and Kiener, Heinz, 4,065,193, Cl. 308-233.000.
Olsen, Robert Charles, to Illinois Tool Works Inc. Shipping carton construction. 4,064,989, Cl. 206-428.000.
Olson, Harold G., to H. G. Olson & Co., Inc. Sealed closures with weather stripping. 4,064,654, Cl. 49-489.000.
Olson, Jerome B.: *See—*
Apel, Fred B.; and Olson, Jerome B., 4,064,773, Cl. 82-38.00A.
Olympus Optical Company, Ltd.: *See—*
Maitani, Yoshihisa; Shimoyama, Kunio; Yoshida, Muneaki; Hashimoto, Akihiko; and Kitagawa, Masahiro, 4,065,777, Cl. 354-23.00R.
Onder, Besir K.: *See—*
Andrews, Philip S.; Farrissey, William J., Jr.; Onder, Besir K.; and Tilley, James N., 4,065,441, Cl. 260-78.00R.
Ondrasik, Vladimir J., II. Deflection-resistant rack. 4,064,994, Cl. 211-153.000.
O'Neill, Daniel R.: *See—*
Painter, Alan; O'Neill, Daniel R.; and Glaeser, George L., Jr., 4,065,044, Cl. 226-188.000.
Ono, Keiichi: *See—*
Sasajima, Kikuo; Ono, Keiichi; Nakao, Masaru; Maruyama, Isamu; Katayama, Shigenari; Inaba, Shigeho; and Yamamoto, Hisao, 4,065,565, Cl. 424-250.000.
Ono Pharmaceutical Company: *See—*
Hayashi, Masaki; Kori, Seiji; Miyake, Hajimu; and Okada, Takanori, 4,065,632, Cl. 560-55.000.
Onoda, Tadayuki: *See—*
Inoue, Toshitugu; Nakamura, Takuji; Onoda, Tadayuki; and Nakatugawa, Tatuo, 4,065,792, Cl. 358-286.000.
Onodera, Toshihiro: *See—*
Takeno, Shouzo; Mashita, Masao; and Onodera, Toshihiro, 4,065,734, Cl. 333-30.00R.
Onose, Kenji: *See—*
Okigami, Noboru; Sekiguchi, Yoshitoshi; Ito, Takusen; and Onose, Kenji, 4,065,247, Cl. 431-202.000.
Oota, Shingo, to Kabushiki Kaisha Komatsu Seisakusho. Engine mounting apparatus. 4,065,082, Cl. 248-9.000.
Opcon, Inc.: *See—*
Wicklund, Joseph B., Jr., 4,065,724, Cl. 330-252.000.
Oppolzer, Wolfgang, to CHON Corporation. Trans-N-acyl-N-alkyl-1-amino-1,3-butadienes, trans-N-acyl-N-aryl-1-amino-1,3-butadienes and preparation thereof. 4,065,496, Cl. 260-561.00R.
Optilon W. Erich Heilmann GmbH: *See—*
Heimberger, Helmut, 4,064,602, Cl. 24-205.10C.
Orba Corporation: *See—*
Cunningham, James Thomas; Snow, Frederick Orren, III; April, Joseph Richard; and Yu, A. Tobey, 4,065,002, Cl. 214-14.000.
Orlowski, Gerald J., to Armour and Company. Molding apparatus and method. 4,065,241, Cl. 425-228.000.
Oronzio de Nora Impianti Elettrochimici, S.p.A.: *See—*
de Nora, Vittorio, 4,065,367, Cl. 204-98.000.
Orthman, Henry K., to Orthman Manufacturing, Inc. Forklift attachment for moving three-point mounted equipment. 4,065,013, Cl. 214-620.000.
Orthman Manufacturing, Inc.: *See—*
Orthman, Henry K., 4,065,013, Cl. 214-620.000.
Osborn-Mushet Tools Limited: *See—*
Siddall, Keith, 4,065,224, Cl. 408-230.000.
Osborne, Anthony Walter, to Intechsa, S.A. Glass painting method. 4,065,311, Cl. 96-27.00R.
Osborne, Franklin T., to Monsanto Company. Process for controlling a bonding gas system. 4,065,399, Cl. 252-182.000.
Osman, Kenneth L.: *See—*
Andre, Michael G.; Schmidt, Melvin J.; and Osman, Kenneth L., 4,065,199, Cl. 339-17.00F.
Osterhout, Joseph C., to Westinghouse Electric Corporation. Spark gap assembly for voltage surge arresters. 4,065,692, Cl. 313-325.000.
Ostolski, Timothy D.: *See—*
Young, Richard E.; and Ostolski, Timothy D., 4,065,761, Cl. 340-271.000.
Ostrowski, Richard C., to Caterpillar Tractor Co. Standardized investment mold assembly. 4,064,927, Cl. 164-244.000.
Otani, Susumu: *See—*
Katoh, Takashi; and Otani, Susumu, 4,064,598, Cl. 19-105.000.
O'Toole, John M. Collapsible tetrahedral structure. 4,064,662, Cl. 52-71.000.
Otsuka, Katsumi, to Toplan Manufacturing Inc.; and Teibow Company Limited. Writing instrument. 4,065,215, Cl. 401-199.000.
Otsuka Pharmaceutical Co., Ltd.: *See—*
Nakagawa, Kazuyuki; Murakami, Nanami; Mori, Hideo; and Tanimura, Kaoru, 4,065,456, Cl. 260-289.00R.
Outboard Marine Corporation: *See—*
Hall, Charles B.; and Young, Robert F., 4,064,824, Cl. 115-41.0HT.
McBride, Edward D., 4,064,765, Cl. 74-6.000.
Ouyang, Paul Hsiung. Self-aligned double implanted short channel V-groove MOS device. 4,065,783, Cl. 357-41.000.
Owaki, Kenichi; Ando, Shizuo; and Nakayama, Norihiko, to Fujitsu Limited. Gas discharge display device including plurality of discharge panel units with intermediate light absorbing plates. 4,065,698, Cl. 313-489.000.

Owen, David Peter; and Miles, Barry Donald Ruberry, to Quantel Limited. Time base corrector. 4,065,787, Cl. 358-160.000.
Owens-Corning Fiberglas Corporation: *See—*
Langlois, Roland E., 4,065,274, Cl. 55-89.000.
Wong, Robert; and Hill, Homer G., 4,065,417, Cl. 260-17.4CL.
Owens, David Vincent: *See—*
Roberts, Gregory Todhunter; Owens, David Vincent; and Goodspeed, Raymond Frank, 4,065,299, Cl. 75-67.00A.
Owens-Illinois, Inc.: *See—*
Lenard, William; and Taylor, Lynn J., 4,065,589, Cl. 428-35.000.
Steierman, Bernard L., 4,065,696, Cl. 313-480.000.
Steierman, Bernard L., 4,065,697, Cl. 313-480.000.
Oyama, George C.: *See—*
Warner, Donald E.; and Oyama, George C., 4,065,645, Cl. 179-156.00R.
Pabst, Rolf; and Jenz, Siegfried, to Daimler-Benz Aktiengesellschaft; and Suddeutsche Kuhlerfabrik Julius Fr. Behr. Equalization tank for cooling liquid. 4,064,848, Cl. 123-41.540.
Paccione, Sebastian W.; and Risnychok, Theodore J., to Sperry Rand Corporation. Printer device using time shared hammers. 4,064,800, Cl. 101-93.140.
Pacemaker Corporation: *See—*
Weitzman, Stewart, 4,064,628, Cl. 32-14.00B.
Package Machinery Company: *See—*
Olmsted, Bernie A., 4,065,108, Cl. 366-76.000.
Pacozzi, Pierino, to Siemens-Albis Aktiengesellschaft. Method for checking transmitter-receiver reversing switches in pulse-doppler radar devices. 4,065,769, Cl. 343-17.700.
Padmanathan, Thurairajah, to Bison-werke Bahre & Greten GmbH & Co. KG. Process for preparing highly pure 1-nitroanthraquinone. 4,065,477, Cl. 260-369.000.
Pahnke Engineering G.m.b.H. & Co. KG: *See—*
Pahnke, Hans J., 4,064,734, Cl. 72-455.000.
Pahnke, Hans J., to Pahnke Engineering G.m.b.H. & Co. KG. Hammer forging presses. 4,064,734, Cl. 72-455.000.
Painter, Alan; O'Neill, Daniel R.; and Glaeser, George L., Jr. Capstan. 4,065,044, Cl. 226-188.000.
Pak-A-Matic, Inc.: *See—*
King, George; and Hannon, James V., 4,064,676, Cl. 53-77.000.
Palfreeman, John S.; Redwood, Martin; Smith, Frederick W.; and Mitchell, Richard F., to U.S. Philips Corporation. Electrical filters including coupled resonators. 4,065,735, Cl. 333-72.000.
Palmer, David A.: *See—*
Fields, Ellis K.; Zimmerschied, Wilford J.; and Palmer, David A., 4,065,442, Cl. 260-78.410.
Palmer, Jeffrey T.: *See—*
Bateman, Mark E.; and Palmer, Jeffrey T., 4,065,349, Cl. 162-158.000.
Palmer, Leonard, to Lened, Inc. Disc record manufacturing method and apparatus. 4,064,674, Cl. 53-23.000.
Palosi, Eva: *See—*
Lorincz, Csaba; Szasz, Kalman; Bolyos, Maria; Jovanovics, Karola; Szporny, Laszlo; Karpati, Egon; and Palosi, Eva, 4,065,458, Cl. 260-293.550.
Pandey, Ramesh C.; and Rinehart, Kenneth L., Jr., to University of Illinois Foundation. Graft thin layer chromatography. 4,065,384, Cl. 210-31.00C.
Panigrahi, Godavarish, to Burroughs Corporation. Associative memory with neighboring recirculated paths offset by one bit. 4,065,756, Cl. 365-49.000.
Parcor: *See—*
Heymes, Alain; and Maffrand, Jean-Pierre, 4,065,460, Cl. 260-294.80C.
Heymes, Alan; and Maffrand, Jean-Pierre, 4,065,459, Cl. 260-294.80C.
Parel Societe Anonyme: *See—*
Newton, Alan Frank Roy, 4,065,375, Cl. 204-237.000.
Parham, Harold D. Three-wheel motorcycle. 4,064,957, Cl. 180-27.000.
Parker-Hannifin Corporation: *See—*
Adams, Ted, 4,065,094, Cl. 251-26.000.
Busdiecker, Wayne Scott; and Seymour, Harold Henry, 4,064,913, Cl. 138-125.000.
Rich, Beldon Lee; and Lansky, Zdenek J., 4,064,788, Cl. 91-395.000.
Pass, Sidney M. School crossing barricade. 4,065,104, Cl. 256-13.100.
Patten, Hudson Taylor; and Woodcock, Floyd Baylie, to Bunker Ramo Corporation. Acoustical underwater communication system for command control and data. 4,065,747, Cl. 340-5.00R.
Paul, Fred R., Jr., to Minnesota Mining & Manufacturing Company. Electromagnetically responsive projectile and system for detecting same. 4,065,753, Cl. 340-152.00T.
Pauli, Jude A., to Emerson Electric Co. Refrigerant liquid indicator. 4,064,826, Cl. 116-117.00C.
Paulus, Philippe; and Econompoulos, Mario, to Centre de Recherches Metallurgiques-Centrum voor Research in de Metallurgie. Continuous heat treatment of cold rolled steel strip. 4,065,329, Cl. 148-18.000.
Pauty, Bernard, to Seb S.A. Domestic appliance for conditiong food such as salads. 4,065,811, Cl. 366-244.000.
Pavilanis, Vytautas: *See—*
Bharucha, Kekhusroo R.; Ajdukovic, Djordje; Pavilanis, Vytautas; and Schrenk, Heinrich Maria, 4,065,570, Cl. 424-273.00R.
Bharucha, Kekhusroo R.; Ajdukovic, Djordje; Pavilanis, Vytautas; and Schrenk, Heinrich Maria, 4,065,571, Cl. 424-273.00R.
Pavlov, Todor: *See—*
Johnson, George Michael; Krueger, Kenneth Keith; and Pavlov, Todor, 4,064,882, Cl. 128-351.000.
Paxson, Timm E.: *See—*
Kim, Leo; Paxson, Timm E.; and Tang, Sunny C., 4,065,505, Cl. 260-600.00R.
Pearson, Durk J.: *See—*
Hill, David A.; Pearson, Durk J.; Motley, Ethelyn P.; Beard, Thomas N.; and Farrell, James L., 4,065,183, Cl. 299-4.000.
Pecherer, Benjamin: *See—*
Brossi, Arnold; Pecherer, Benjamin; and Sunbury, Robert, 4,065,473, Cl. 260-340.50R.
Pecoraro, George A., to PPG Industries, Inc. Seal for threshold cooler or holddown member of a float glass tank. 4,065,285, Cl. 65-182.00R.
Pels-Leusden, Carl Otto; Stupperich, Robert; Weber, Hans-Bernd; and Reinders, Rudi, to Institute fur Ziegelforschung Essen e.V. Installation for drying molded blanks. 4,064,639, Cl. 34-212.000.
Penningroth, Herbert M.; and Guyton, James H., to General Motors Corporation. Diagnostic connection means for vehicle mounted radio. 4,065,719, Cl. 325-312.000.
Pennington, Charles A. Guide for a motorized circular handsaw. 4,065,114, Cl. 269-2.000.
Pennwalt Corporation: *See—*
Sandler, Stanley Robert, 4,065,630, Cl. 560-26.000.
Perego, Giuseppe. Convertible chair. 4,065,175, Cl. 297-130.000.
Peripheral Dynamics, Inc.: *See—*
Garczynski, John S.; Jablanofsky, Charles C.; and Murray, Joseph P., 4,065,662, Cl. 235-419.000.
Perkins, David R. Compound vessel. 4,065,016, Cl. 215-6.000.
Peroni, Peter A.: *See—*
Teti, Joseph A., Jr.; and Peroni, Peter A., 4,064,594, Cl. 16-125.000.
Perry, Thomas W.: *See—*
Carella, Richard F.; and Perry, Thomas W., 4,065,178, Cl. 297-341.000.
Petersen, Virgil F.; and Skirvin, Willard L., to Cincinnati Electronics Corporation. Purge and charge equipment. 4,064,898, Cl. 137-240.000.
Peterson, Albert Henry, to Hercules Incorporated. Solar energy absorber. 4,065,593, Cl. 428-92.000.
Peterson, Donald John; and Robbins, Medford Dwight, to Procter & Gamble Company, The. Process for preparing substituted cyclopropycarbinyl compounds. 4,065,480, Cl. 260-429.900.
Peterson, Donald W.: *See—*
Cvetko, Henry J.; and Peterson, Donald W., 4,065,648, Cl. 179-178.000.
Peterson, Robert F., Jr.: *See—*
Farber, Milton; Loveless, Frederick C.; and Peterson, Robert F., Jr., 4,064,922, Cl. 152-347.000.
Peterson, Wesley Robinson: *See—*
Jaffe, Wolfgang; and Peterson, Wesley Robinson, 4,065,739, Cl. 335-234.000.
Petillo, Phillip J. Fret. 4,064,779, Cl. 84-314.000.
Petit, William A.: *See—*
Huffman, Jerry P.; LaForest, John P.; Petit, William A.; and Smith, James A., 4,065,081, Cl. 246-34.00R.
Petro-Tex Chemical Corporation: *See—*
Cares, William R., 4,065,512, Cl. 260-641.000.
Petroff, Mitchell. Filter and air freshener apparatus. 4,065,262, Cl. 21-74.00R.
Petrolite Corporation: *See—*
Martin, Richard L.; and French, Eddie C., 4,065,373, Cl. 204-195.00C.
Quinlan, Patrick M., 4,065,260, Cl. 21-2.70R.
Petrone, Joseph A. Gas main stopper. 4,064,912, Cl. 138-94.000.
Petrov, Vladimir Alexandrovich: *See—*
Evkin, Ivan Frolovich; Petrov, Vladimir Alexandrovich; Olevsky, Viktor Markovich; Ruchinsky, Vitaly Rafael-Abovich; Bushev, Vladimir Semenovich; and Tatyanchikov, Valentin Alexeevich, 4,065,346, Cl. 159-6.00R.
Peviani, Camillo: *See—*
Connizzoli, Mario; Peviani, Camillo; and Maietti, Francesca, 4,064,707, Cl. 62-374.000.
Pfizer Inc.: *See—*
Kurowsky, Stephen R., 4,065,607, Cl. 526-15.000.
Schaaf, Thomas K.; and Bindra, Jasjit Singh, 4,065,472, Cl. 260-332.20C.
Pfliegel, Todor; Seres, Jeno; Gajary, Antal; Daroczy nee Csuka, Klara; and Nagy, Lajos T., to Chinoin Gyogyszer es Vegyeszeti Termekek Gyara Rt. Process for the preparation of N-phosphonomethyl-glycine. 4,065,491, Cl. 260-502.500.
Philadelphia Tramrail Company: *See—*
Schwab, A. Henry, 4,064,650, Cl. 49-277.000.
Philip Morris, Inc.: *See—*
Gergely, Alex Sandor, 4,065,239, Cl. 425-141.000.
Phillips Petroleum: *See—*
Holtz, Hans D., 4,065,511, Cl. 260-635.00R.
Phillips Petroleum Company: *See—*
Cole, Clinie E., 4,065,240, Cl. 425-222.000.
Phillips, Thomas E., to Baxter Travenol Laboratories, Inc. Flow control device. 4,065,093, Cl. 251-6.000.
Phipps, Frank T., to Timerax Holdings Ltd. Pool liner retainer. 4,064,571, Cl. 4-172.190.
Photocircuits Division of Kollmorgen Corporation: *See—*
Herrmann, Gunther, 4,065,363, Cl. 204-1.00T.
Piche, Ernest. Tenon cutting machine with cutting head. 4,064,920, Cl. 144-200.000.
Picker Corporation: *See—*
Pleil, Viktor W., 4,065,689, Cl. 313-56.000.

Pierik, Gerald A.: *See*—
House, William H.; and Pierik, Gerald A., 4,064,981, Cl. 192-141.000.
Pilarski, Regis V.; and Yates, Gerald A., to Firestone Tire & Rubber Company, The. Dual spool retractor. 4,065,070, Cl. 242-107.40A.
Pilz, William M., III, to Container Corporation of America. Self-locking flanged cap. 4,065,048, Cl. 229-43.000.
Pines Trailer Corporation: *See*—
Gregg, Richard G., 4,065,168, Cl. 296-28.00M.
Pinkowski, Norman J.: *See*—
Delaney, Edward A.; Pinkowski, Norman J.; and Nudenberg, Walter, 4,065,444, Cl. 260-880.00R.
Pinto, Alwyn, to Imperial Chemical Industries Limited. Methanol. 4,065,483, Cl. 260-449.500.
Pitney-Bowes, Inc.: *See*—
Gluck, Julius; and Vijayendran, Bheema Rao, 4,064,833, Cl. 118-646.000.
Pitt, Gillies D., to International Standard Electric Corporation. Discharge system for ballast tank or the like. 4,064,893, Cl. 137-115.000.
Pittaro, Richard J., to Krautkramer-Branson, Incorporated. Ultrasonic inspection device. 4,064,742, Cl. 73-611.000.
Pittman, Robert W.; and Hermes, Chester E., to Texaco Inc. Method and system for determining formation porosity. 4,064,749, Cl. 73-152.000.
Pleil, Viktor W., to Picker Corporation. Dual filament X-ray tube. 4,065,689, Cl. 313-56.000.
Plunkett, William O.: *See*—
Williams, David R., 4,064,857, Cl. 123-141.000.
Poarch, Archie L. Method for extraction of copper products from copper bearing material. 4,065,300, Cl. 75-117.000.
Pobuta, Walter; and Dolgos, Charles, to Thomas & Betts Corporation. Strap tension sensing and cut off mechanism. 4,064,918, Cl. 140-123.600.
Pogonowski, Ivo C., to Texaco Inc. Methods and gun for anchoring piles and for temporarily interconnecting two cylinders underwater. 4,064,703, Cl. 61-53.680.
Pogue, Russell W., Jr., to General Motors Corporation. Electronic channel selector. 4,065,720, Cl. 325-464.000.
Pohl, Jorg: *See*—
Emig, Peter; Pohle, Hans; Scheffler, Gerhard; Brock, Norbert; Lenke, Hans-Dieter; and Pohl, Jorg, 4,065,501, Cl. 260-570.600.
Pohle, Hans: *See*—
Emig, Peter; Pohle, Hans; Scheffler, Gerhard; Brock, Norbert; Lenke, Hans-Dieter; and Pohl, Jorg, 4,065,501, Cl. 260-570.600.
Pokorny, Joseph E.; and Keller, Richard N. Self-leveling extendable table. 4,064,814, Cl. 108-64.000.
Polke, Hans-Joachim, to W. H. Kuester K.G. Preforming apparatus for wires in stranding machines. 4,064,685, Cl. 57-55.000.
Pollack, Maxwell Aaron, to Van Dyk Research Corporation. Process for manufacturing a xerographic toner cartridge. 4,065,335, Cl. 156-69.000.
Pollmeier, Werner, to Nixdorf Computer AG. Voltage stabilizer. 4,065,713, Cl. 363-19.000.
Polva Nederland B.V.: *See*—
Acda, Petrus Marinus; and Karreman, Jacob, 4,065,243, Cl. 425-393.000.
Pond, David M.; Wang, Richard H. S.; and Irick, Gether, Jr., to Eastman Kodak Company. Polychromophoric heterocyclic ultraviolet stabilizers and their use in organic compositions. 4,065,427, Cl. 260-45.8NT.
Popeil Brothers, Inc.: *See*—
Popeil, Samuel J.; and Ruiz, Lorenzo Anthony, 4,065,115, Cl. 269-16.000.
Popeil, Samuel J.; and Ruiz, Lorenzo Anthony, to Popeil Brothers, Inc. Foldable cutting board. 4,065,115, Cl. 269-16.000.
Poppel, Gunter: *See*—
Beck, Heinz; Gabriel, Gerhard; and Poppel, Gunter, 4,065,608, Cl. 526-49.000.
Porter, Harold Felton: *See*—
Thorpe, John Anton; and Porter, Harold Felton, 4,065,486, Cl. 260-465.300.
Porter, Ralph D.: *See*—
Leskovec, Edward V.; and Porter, Ralph D., 4,065,112, Cl. 267-34.000.
Potter, Richard C., to Shell Oil Company. Insecticidal compositions employing certain block copolymers. 4,065,555, Cl. 424-83.000.
Potts, Vinson S., to Crown Cork & Seal Company, Inc. Easy opening can end with push-in tabs. 4,065,025, Cl. 220-258.000.
Poujois, Robert: *See*—
Barbier, Daniel; Ittel, Jean-Michel; and Poujois, Robert, 4,065,758, Cl. 340-227.00R.
Powell, James E., to Shell Oil Company. Tetrahydro-2-(nitromethylene)-2H-1,3-thiazine insect control agents. 4,065,560, Cl. 424-246.000.
PPG Industries, Inc.: *See*—
Christenson, Roger M.; and Evjen, Clarence E., 4,065,415, Cl. 260-17.4SG.
Christenson, Roger M.; and Evjen, Clarence E., 4,065,416, Cl. 260-17.4SG.
Cormany, Charles L., 4,065,323, Cl. 134-10.000.
Franz, Helmut, 4,065,626, Cl. 428-629.000.
Kallenborn, John, 4,065,065, Cl. 242-18.00G.
Ladage, Lawrence; and Holste, Hilary E., 4,065,267, Cl. 23-263.000.
Mang, Raymond L.; and Carr, Thomas W., 4,065,284, Cl. 65-114.000.
Miller, Richard H., 4,065,513, Cl. 260-656.00R.
Pecoraro, George A., 4,065,285, Cl. 65-182.00R.
Prucnal, Paul J.; and DeMajistre, Robert, 4,065,624, Cl. 428-522.000.
Rechlicz, Thomas A.; and Maloney, Bernard A., 4,065,534, Cl. 264-91.000.
Sare, Edward J.; and Lavanish, Jerome M., 4,065,543, Cl. 423-240.000.
Tunison, Donald E., Jr., 4,065,548, Cl. 423-410.000.
Prats, Michael, to Shell Canada Limited; and Shell Explorer Limited. Aquifer-plugging steam soak for layered reservoir. 4,064,942, Cl. 166-303.000.
Pratt, Richard D.; Proffitt, Paul F.; and Webb, George, to General Electric Company. Intumescent fire retardant material. 4,065,394, Cl. 252-8.100.
Pray, Winston C., to Flexible Steel Lacing Company. Fastener driver tool. 4,065,045, Cl. 227-147.000.
Pressmaster Ltd.: *See*—
Wiener, Hans, 4,065,084, Cl. 248-117.100.
Price Pfister Brass Mfg. Co.: *See*—
Tolnai, Julius L., 4,064,904, Cl. 137-454.500.
Princeton Chemical Research, Inc.: *See*—
Miller, Richard; Reich, Murray H.; and Kuntz, Emma, 4,065,537, Cl. 264-143.000.
Pringle, William L., to United States Steel Corporation. Vehicle wheel suspension assembly. 4,065,153, Cl. 280-704.000.
Prinzbach, Horst: *See*—
Koenig, Horst; Prinzbach, Horst; and Schwesinger, Reinhard, 4,065,454, Cl. 260-250.00P.
Procter & Gamble Company, The: *See*—
Haller, Thomas L., 4,065,037, Cl. 222-153.000.
Lucas, Malcolm Bramel, 4,065,536, Cl. 264-98.000.
Peterson, Donald John; and Robbins, Medford Dwight, 4,065,480, Cl. 260-429.900.
Proffitt, Paul F.: *See*—
Pratt, Richard D.; Proffitt, Paul F.; and Webb, George, 4,065,394, Cl. 252-8.100.
Progar, Donald J.; Bell, Vernon L.; and St. Clair, Terry L., to United States of America, National Aeronautics and Space Administration. Polyimide adhesives. 4,065,345, Cl. 156-309.000.
Provendier, Jacques Henri, to Societe Anonyme de Telecommunications. High capacity time connection networks. 4,065,641, Cl. 179-15.0AT.
Prucnal, Paul J.; and DeMajistre, Robert, to PPG Industries, Inc. Radiation curable coating composition. 4,065,624, Cl. 428-522.000.
Pulak, Richard P., to UOP Inc. Spent catalyst regeneration apparatus. 4,065,269, Cl. 23-288.00B.
Pullman Incorporated: *See*—
Hutchison, John W., 4,064,591, Cl. 16-99.000.
Puls, Walter: *See*—
Frommer, Werner; Gericke, Horst; Keup, Uwe; Puls, Walter; Schmidt, Delt; and Wagner, Otto, 4,065,557, Cl. 424-181.000.
Puskas, William L.: *See*—
Dussault, Jean G. M.; Geckle, Robert A.; and Puskas, William L., 4,064,885, Cl. 134-58.00R.
Pyott-Boone Machinery, Corporation: *See*—
Teti, John J., 4,065,011, Cl. 214-146.00E.
Quain, Wilbur C.: *See*—
Carter, Everett M.; and Quain, Wilbur C., 4,065,649, Cl. 200-5.00A.
Quantel Limited: *See*—
Owen, David Peter; and Miles, Barry Donald Ruberry, 4,065,787, Cl. 358-160.000.
Quatrini, L. Rita: *See*—
MacInnis, Martin B.; and Quatrini, L. Rita, 4,065,413, Cl. 260-9.000.
Quehen, Andre; and Figueres, Roger, to Secim; and Societe de Vente de l'Aluminium Pechiney. Apparatus for varying the mold length of endless belt molds using interchangeable belts. 4,064,929, Cl. 164-433.000.
Quinlan, Patrick M., to Petrolite Corporation. Halogen derivatives of alkynoxymethyl amines as corrosion inhibitors. 4,065,260, Cl. 21-2.70R.
Rabe, Paul R., to General Motors Corporation. Solid state threshold detector with hysteresis. 4,065,721, Cl. 328-1.000.
Rabenbauer, Ludwig. Air conditioned pet bed. 4,064,835, Cl. 119-1.000.
Rackliffe, Richard J.; Goodfriend, Harvey J.; and Armstrong, Lee R., to United Technologies Corporation. Relative and sub-cyclic speed measurements for internal combustion engine diagnostics. 4,064,747, Cl. 73-116.000.
Radakovich, Louis. Fork and frame assembly. 4,065,015, Cl. 214-750.000.
Radiometer A/S: *See*—
Jeppesen, Borge; and Aas, Flemming, 4,064,609, Cl. 29-235.000.
Raffel, Reiner: *See*—
Althausen, Ferdinand; and Raffel, Reiner, 4,065,106, Cl. 366-76.000.
Rakoczi, Jozsef; Beck, Ivan; Kiss, Csaba; Horvath, Imre; and Nemes, Miklos, to Egyt Gyogyszervegyeszeti Gyar. Process for preparing 2-guanidinomethyl-perhydroazocine-sulfate. 4,065,450, Cl. 260-239.00B.
Ralston, John Pershing; Turpin, Warren Huntsman, deceased; and by Turpin, Lola, legal representative. Spacesaver tiltable storage unit. 4,064,992, Cl. 211-75.000.
Randall, Robert P.; and Torbett, Richard L., to Three Rivers Aluminum Company. Sliding window. 4,064,653, Cl. 49-458.000.
Rankin, Billy F., to Burton, Parsons and Company, Inc. Contact lens cleaning solution. 4,065,324, Cl. 134-30.000.

Rapp, Charles F.: *See*—
Baak, Nils Tryggve E. A.; and Rapp, Charles F., 4,065,317, Cl. 106-52.000.
Rappuoli, Bruno: *See*—
Cecere, Francesco; Galli, Giuliano; Della Penna, Gino; and Rappuoli, Bruno, 4,065,353, Cl. 195-2.000.
Rasmussen, Villum Benedikt Kann; and Kann-Rasmussen, Lars Erik, to V. Kann Rasmussen & Co. Window, particularly intended for installation in an inclined or flat roof. 4,064,649, Cl. 49-250.000.
Ratledge, Houston, to Carrier Corporation. Refuse collection vehicles. 4,065,008, Cl. 214-83.300.
Raulf, Erich: *See*—
Gemmeke, Wilfried; Werner, Heinrich; Echterhoff, Heinz; and Raulf, Erich, 4,065,296, Cl. 75-48.000.
Raymond Lee Organization, Inc., The: *See*—
Bailey, David P., 4,064,901, Cl. 137-351.000.
Chan, Peter, 4,065,125, Cl. 273-5.00R.
Fals, Henry J., 4,064,781, Cl. 84-322.000.
Raytheon Company: *See*—
Knight, Philip A., Jr., 4,064,866, Cl. 126-271.000.
RCA Corporation: *See*—
Arnold, Anthony Francis, 4,065,588, Cl. 427-89.000.
Beyers, Billy Wesley, Jr., 4,065,681, Cl. 307-246.000.
Crosby, Edward Lewis, Jr., 4,064,740, Cl. 73-38.000.
Ross, Daniel Louis; and Barton, Lucian Anthony, 4,065,306, Cl. 96-1.00R.
Stern, Herman Abraham; Sorkin, Howard; and Schindler, Henry Claude, 4,064,919, Cl. 141-7.000.
Stewart, Wilber Clarence, 4,065,786, Cl. 358-128.000.
Wu, Chin Tao, 4,065,666, Cl. 364-759.000.
Realex Corporation: *See*—
Magers, Wallace Farnholm; Hudson, Larry Lee; and Workman, James Phillip, 4,065,038, Cl. 222-321.000.
Reavis, Robert E.: *See*—
Williams, David R., 4,064,857, Cl. 123-141.000.
Rebold, Jerome I.: *See*—
Meshulam, Avram; and Rebold, Jerome I., 4,064,626, Cl. 30-287.000.
Rechlicz, Thomas A.; and Maloney, Bernard A., to PPG Industries, Inc. Method of providing a resin reinforced asbestos diaphragm. 4,065,534, Cl. 264-91.000.
Redwood, Martin: *See*—
Palfreeman, John S.; Redwood, Martin; Smith, Frederick W.; and Mitchell, Richard F., 4,065,735, Cl. 333-72.000.
Rees, Huw David: *See*—
Gray, Kenneth Walter; and Rees, Huw David, 4,065,782, Cl. 357-23.000.
Reese, Edmund Arthur; Meyer, Charles Shelley; and Leach, George S., Jr., to Motorola, Inc. Clamped push-pull driver circuit with output feedback. 4,065,678, Cl. 307-237.000.
Reeves, Gordon P. Conveyor lubricating apparatus. 4,064,970, Cl. 184-15.00B.
Reffert, Rudi Wilhelm: *See*—
Wild, Hans; Jeckel, Guenter; Echte, Adolf; Zizlsperger, Johann; Reffert, Rudi Wilhelm; and Thielen, Gunter, 4,065,532, Cl. 264-68.000.
Regamey, Pierre Eugene. Method and device for thermally controlling a utilization unit fed by a condensable vapor distributing system. 4,065,056, Cl. 237-67.000.
Reger, David William; Garber, Murray; and Long, Don Wesley, to American Cyanamid Company. Integrated process for the preparation of 2-dialkoxyphosphinylimino-1,3-dithietane. 4,065,466, Cl. 260-327.00M.
Reggio, Richard A.; Friello, Dominick R.; and Beam, John E., to Life Savers, Inc. Xylitol chewing gum with hydrophillic colloid binder. 4,065,578, Cl. 426-3.000.
Regie Nationale des Usines Renault: *See*—
Baudoin, Patrice, 4,064,694, Cl. 60-413.000.
Regis Belt Maintenance Corporation: *See*—
Larson, Robert L., 4,064,775, Cl. 83-4.000.
Rego: *See*—
Billington, Evans R.; and Batka, Robert J., 4,064,907, Cl. 137-614.200.
Reh, Lothar: *See*—
Weckesser, Ernst; Sparwald, Volker; Reh, Lothar; Bohm, Eberhard; and Graf, Rolf, 4,065,271, Cl. 55-2.000.
Rehrig, Houston. Child seat for cart. 4,065,142, Cl. 280-33.99B.
Reich, Murray H.: *See*—
Miller, Richard; Reich, Murray H.; and Kuntz, Emma, 4,065,537, Cl. 264-143.000.
Reichhold Chemicals, Inc.: *See*—
Allyn, Charles L.; Manlove, James C.; Chang, Gerald M.; and Burmark, Robert C., 4,065,421, Cl. 260-29.40R.
Reid, Hugh F.: *See*—
Lussiez, Guy W.; and Reid, Hugh F., 4,065,105, Cl. 366-348.000.
Reid, Joyce: *See*—
Hauck, Frederic P.; and-Reid, Joyce, 4,065,485, Cl. 260-464.000.
Reidel, Jay: *See*—
Warner, Richard F.; Billand, William; and Vincent, Riggi, 4,064,644, Cl. 40-152.000.
Reinders, Rudi: *See*—
Pels-Leusden, Carl Otto; Stupperich, Robert; Weber, Hans-Bernd; and Reinders, Rudi, 4,064,639, Cl. 34-212.000.
Reinhart, William F.: *See*—
Faid, Robert W.; and Reinhart, William F., 4,064,672, Cl. 52-726.000.
Rejai, Jamshid, to Molins Machine Company, Inc. Emergency brake for movable conveyor. 4,065,122, Cl. 271-201.000.
Remington Arms Company, Inc.: *See*—
Eckstein, George R.; and Moyher, William G., 4,065,541, Cl. 264-295.000.
Renison, Joseph Theo: *See*—
Graham, Peter Charles; and Renison, Joseph Theo, 4,064,785, Cl. 85-62.000.
Renner, Alfred: *See*—
Muller, Albrecht; Haug, Theobald; and Renner, Alfred, 4,065,433, Cl. 260-47.0UA.
Reno, Woodrow James, to Becton, Dickinson and Company. Device for making precise incisions for bleeding time testing and the like. 4,064,871, Cl. 128-2.00G.
Renold Ajax Inc.: *See*—
Breads, Eugene H., 4,064,708, Cl. 64-1.00V.
Rentmeester, Kenneth R.; Jurcenko, John A.; and Welks, John D., to American Can Company. Container and method of forming. 4,065,023, Cl. 220-75.000.
Research Corporation: *See*—
Kowel, Stephen T.; and Kornreich, Phillipp G., 4,065,791, Cl. 358-213.000.
Research-Cottrell: *See*—
Byrne, Robert Edward, 4,065,281, Cl. 65-19.000.
Rexnord Inc.: *See*—
MacMaster, Edward, 4,065,161, Cl. 292-113.000.
Stumpe, Warren R., 4,065,343, Cl. 156-212.000.
Reynolds, Charles A., to SmithKline Instruments, Inc. Real-time ultrasonic imaging system. 4,064,741, Cl. 73-620.000.
Reynolds, Duane S.: *See*—
Johnson, Laurence E.; and Reynolds, Duane S., 4,065,102, Cl. 254-186.0HC.
Rhone-Poulenc Industries: *See*—
Leroy, Maurice; and Helgorsky, Jacques, 4,065,547, Cl. 423-321.00S.
Rice, George W.: *See*—
Waters, Kenneth H.; and Rice, George W., 4,065,749, Cl. 340-15.5MC.
Rich, Beldon Lee; and Lansky, Zdenek J., to Parker-Hannifin Corporation. Cushioning means for hydraulic cylinder. 4,064,788, Cl. 91-395.000.
Richardson Company, The: *See*—
Muzyczko, Thaddeus M.; and Jones, Thomas H., 4,065,314, Cl. 96-115.00R.
Richter Gedeon Vegyeszeti Gyar Rt.: *See*—
Lorincz, Csaba; Szasz, Kalman; Bolyos, Maria; Jovanovics, Karola; Szporny, Laszlo; Karpati, Egon; and Palosi, Eva, 4,065,458, Cl. 260-293.550.
Ridenour, Michael R., to Evans Products Company. Dual action control mechanism. 4,065,052, Cl. 236-86.000.
Ridler, Keith Douglas; Gosling, Alexander Bennett; and Edge, Gordon Malcolm, to Strathearn Audio Limited. Linear bearing for parallel tracking arm. 4,065,188, Cl. 308-10.000.
Riegelman, Harry M.; and Madison, Vernon Edwin, to Rusco Industries, Inc. Retainer for sliding doors and the like. 4,064,592, Cl. 16-100.000.
Rietdijk, Johan Adriaan: *See*—
Lakerveld, Herman Gerard; and Rietdijk, Johan Adriaan, 4,065,674, Cl. 250-406.000.
Rietsch, Eike, to Deutsche Texaco Aktiengesellschaft. Method and apparatus for the determination of start time difference and overall phase shift between two signals. 4,065,665, Cl. 364-487.000.
Rigby, Robert Alexander, to Algard Pty. Ltd. Algae growth control. 4,065,386, Cl. 210-60.000.
Rilsan Corporation: *See*—
Koch, Robert B., 4,065,519, Cl. 260-857.0TW.
Rinaldo, James D., to Caterpillar Tractor Co. Modular control linkage assembly for a hydrostatic transmission. 4,064,766, Cl. 74-473.00R.
Rinehart, Kenneth L., Jr.: *See*—
Pandey, Ramesh C.; and Rinehart, Kenneth L., Jr., 4,065,384, Cl. 210-31.00C.
Rinehart, Michael Kent: *See*—
Myers, Charles Louis; and Rinehart, Michael Kent, 4,065,522, Cl. 260-880.00R.
Risnychok, Theodore J.: *See*—
Paccione, Sebastian W.; and Risnychok, Theodore J., 4,064,800, Cl. 101-93.140.
Riwoplan Medizin-Technische Einrichtungs-Gesellschaft mbH: *See*—
Heckele, Helmut, 4,064,886, Cl. 134-95.000.
Rizaev, Ramiz Gasan Kuli ogly; Mekhtiev, Soltan Dzhafarovich; Magerramova, Zemfira Jusif kyzy; Sheinin, Viktor Efimovich; Mirataev, Mirabdulla Mirakhmed ogly; and Guseinov, Idris Aslan ogly. Process for producing benzonitrile. 4,065,487, Cl. 260-465.00C.
Robbins, Joe David: *See*—
Johnston, Herbert N.; Wray, Joseph A.; Robbins, Joe David; and Schrager, Morton, 4,065,304, Cl. 96-1.0LY.
Robbins, Medford Dwight: *See*—
Peterson, Donald John; and Robbins, Medford Dwight, 4,065,480, Cl. 260-429.900.
Robert Bosch GmbH: *See*—
Cub, Fritz, 4,065,341, Cl. 156-187.000.
Fehrenbach, Siegfried; and Feuerbacher, Alfred, 4,064,854, Cl. 123-139.0AW.
Hacker, Wolf-Dieter; Friese, Karl-Hermann; Steinke, Leo; and Weyl, Helmut, 4,065,372, Cl. 204-195.00S.

Hofer, Gerald; Bofinger, Gunter; Nothdurft, Heinz; Khosrawi, Mohammad-Ali; Simon, Helmut; and Konrath, Karl, 4,065,236, Cl. 417-493.000.
Holzbaur, Siegfried, 4,064,843, Cl. 123-32.0EJ.
Holzbaur, Siegfried; and Barth, Horst, 4,064,847, Cl. 123-32.0EJ.
Latsch, Reinhard; and Bianchi, Valerio, 4,064,846, Cl. 123-32.0EA.
Wessel, Wolf, 4,064,851, Cl. 123-119.00B.
Roberts, Gregory Todhunter; Owens, David Vincent; and Goodspeed, Raymond Frank, to Teledyne Industries, Inc. Magnesium reclamation process and apparatus. 4,065,299, Cl. 75-67.00A.
Roberts, John A.; and Roberts, Peter R., to Brunswick Corporation. Method of making passage structures. 4,065,046, Cl. 228-156.000.
Roberts, Peter R.: *See—*
Roberts, John A.; and Roberts, Peter R., 4,065,046, Cl. 228-156.000.
Roberts, William C., Jr.; and Edmonds, Stephen. Variable camber wing sail. 4,064,821, Cl. 114-103.000.
Robeson, Lloyd Mahlon: *See—*
Bailey, Frederick Eugene; von Dohlen, Werner Claus; Matzner, Markus; Young, Robert Hayward; and Robeson, Lloyd Mahlon, 4,065,520, Cl. 260-878.00B.
Robilliard, Leonard T.: *See—*
Hewett, Alan R.; and Robilliard, Leonard T., 4,064,813, Cl. 108-60.000.
Robinson, Kermit Hamlin, to Harnessed Energies, Inc. Doppler speedometer. 4,065,745, Cl. 340-3.00D.
Roblin Industries, Inc.: *See—*
Sauer, Gale E., 4,064,671, Cl. 52-696.000.
Rocco, Jack O., to Clark Equipment Company. Low lift truck. 4,065,012, Cl. 214-510.000.
Roche, Michael F.; Faist, Suzan M.; Eberhart, James G.; and Ross, Laurids E., to United States of America, Energy Research and Development Administration. Wick-and-pool electrodes for electrochemical cell. 4,065,602, Cl. 429-72.000.
Rock, Frank C. Computing postal scale and method with taring capability. 4,064,954, Cl. 177-25.000.
Rocket of London Limited: *See—*
Meredith, Hayden Gwyn, 4,064,881, Cl. 128-325.000.
Rockwell-Rimoldi S.p.A.: *See—*
Marforio, Nerino, 4,064,818, Cl. 112-258.000.
Rodeman, Donald W.: *See—*
Endres, Thomas E.; and Rodeman, Donald W., 4,065,723, Cl. 330-302.000.
Rodemeyer, Donald James; and Hruby, John Eugene, to Metaframe Corporation. Aminated animal habitat. 4,064,839, Cl. 119-15.000.
Rodenberg, Herbert G.: *See—*
Foulks, Harold C., Jr.; Rodenberg, Herbert G.; and Mains, Harold E., 4,065,418, Cl. 260-23.0XA.
Rodgers, Bernard L.: *See—*
Lawlis, John L.; Rodgers, Bernard L.; and Winkowski, Daniel A., 4,065,333, Cl. 156-40.000.
Rodgers, Douglas Noss; and Roy, Prodyot, to General Electric Company. Electrochemical carbon meter. 4,065,371, Cl. 204-195.00R.
Roebke, Heide, to Schering Corporation. Use of 2-imidazolines as hypoglycemic agents. 4,065,569, Cl. 424-273.00R.
Roest, Jacob B.: *See—*
De Beukelaar, Jan W.; Van Zwet, Henry; and Roest, Jacob B., 4,065,610, Cl. 526-70.000.
Rogers, Lloyd W., Jr., to General Motors Corporation. Belt retractor with winding prevention mechanism. 4,065,155, Cl. 280-744.000.
Rogers, Pamela J.: *See—*
Hutton, Thomas W.; and Rogers, Pamela J., 4,065,523, Cl. 260-885.000.
Rogier, Edgar R.: *See—*
MacKay, Kenneth D.; and Rogier, Edgar R., 4,065,502, Cl. 260-590.00R.
Rohm, Gunter Horst. Drill chuck. 4,065,139, Cl. 279-62.000.
Rohm and Haas Company: *See—*
Hutton, Thomas W.; and Rogers, Pamela J., 4,065,523, Cl. 260-885.000.
Rohner, Joachim, to W. Schlafhorst & Co. Creel carriage. 4,065,073, Cl. 242-131.000.
Rohr Industries, Incorporated: *See—*
Tseo, Gudin, 4,064,961, Cl. 181-213.000.
Roland Corporation: *See—*
Akamatsu, Keiji, 4,064,777, Cl. 84-1.030.
Roll-Out Insulation Systems, Inc.: *See—*
Cary, Charles C., 4,064,648, Cl. 47-17.000.
Rolls-Royce Limited: *See—*
Brooks, Leslie John, 4,065,077, Cl. 244-54.000.
Romanzi, Louis, Jr., to Gateway Industries, Inc. Safety belt buckle. 4,064,603, Cl. 24-230.00A.
Rooney, Clarence Stanley: *See—*
Atkinson, Joseph George; Rooney, Clarence Stanley; Girard, Yves; and Engelhardt, Edward L., 4,065,572, Cl. 424-273.00R.
Rose, Frederick A.: *See—*
Kristof, Paul J.; and Rose, Frederick A., 4,065,664, Cl. 364-487.000.
Rose, Ronald N. Control circuit. 4,065,227, Cl. 417-45.000.
Rosen, John F.: *See—*
Moscowitz, George S.; Rosen, John F.; and Hiatt, Sarah, 4,064,877, Cl. 128-188.000.
Ross, Daniel Louis; and Barton, Lucian Anthony, to RCA Corporation. Electron beam recording media containing 4,4'-bis(3-diazo-3,4-dihydro-4-oxo-1-naphthalene-sulfonyloxy)benzil. 4,065,306, Cl. 96-1.00R.
Ross, John E. System for aligning trailer hitches. 4,065,147, Cl. 280-477.000.
Ross, Laurids E.: *See—*
Roche, Michael F.; Faist, Suzan M.; Eberhart, James G.; and Ross, Laurids E., 4,065,602, Cl. 429-72.000.
Ross-Petersen, Karl Jakob, to Aktieselskabet Grindstedvaerket. Amino containing pyridyloxy propanols. 4,065,461, Cl. 260-296.0AE.
Rossi, John P., to CBS Inc. Method and apparatus for PCM-encoding NTSC color television at sub-Nyquist rate. 4,065,784, Cl. 358-13.000.
Rostad, Rolf A. Electronic control system for motors and the like. 4,065,804, Cl. 361-96.000.
Roth, Bernard E., to Safe Track Manufacturing Limited. Anti-jackknife apparatus. 4,065,149, Cl. 280-432.000.
Roth, William B., to United States of America, Agriculture. Methanol treated activated sludge as an agricultural chemical carrier. 4,065,287, Cl. 71-13.000.
Rouiller, Jean Marie, to Stoppani S.A., Establissements pour la mecanique de precision et l'electro-mecanique; and Oliver Technik AG. Apparatus for interconnecting a telephone line and a portable calculator. 4,065,640, Cl. 179-7.1TP.
Rovac Corporation, The: *See—*
Edwards, Thomas C.; and Ecker, Amir L., 4,064,705, Cl. 62-2.000.
Rowan, Daniel J. Conveyor system for handling non-rigid containers. 4,064,987, Cl. 198-604.000.
Roy, Prodyot: *See—*
Rodgers, Douglas Noss; and Roy, Prodyot, 4,065,371, Cl. 204-195.00R.
Ruark, Bruce J.; and Shaner, Richard L., to General Electric Company. Hinge arrangement for room air conditioner access door. 4,065,027, Cl. 220-343.000.
Rubenstein, Kenneth E.: *See—*
Ullman, Edwin F.; and Rubenstein, Kenneth E., 4,065,354, Cl. 195-63.000.
Ruchinsky, Vitaly Rafael-Abovich: *See—*
Evkin, Ivan Frolovich; Petrov, Vladimir Alexandrovich; Olevsky, Viktor Markovich; Ruchinsky, Vitaly Rafael-Abovich; Bushev, Vladimir Semenovich; and Tatyanchikov, Valentin Alexeevich, 4,065,346, Cl. 159-6.00R.
Rudd, Alan J.: *See—*
Ruud, Alan J.; and Lewin, Ian, 4,065,667, Cl. 362-217.000.
Rudolph, Paul, to Metallgesellschaft Aktiengesellschaft. Process for breaking emulsions in a tar-containing aqueous condensate. 4,065,273, Cl. 55-50.000.
Rueggeberg, Werner; and Wiker, Joseph J., to Armstrong Cork Company. Plasma-process vacuum seal. 4,065,137, Cl. 277-34.000.
Ruga, Wayne. Structural system connection. 4,065,220, Cl. 403-169.000.
Ruhrnschopf, Ernst-Peter; and Linke, Gerhard, to Siemens Aktiengesellschaft. Planigraphic X-ray apparatus for the preparation of tomographic images. 4,065,397, Cl. 250-445.00T.
Ruiz, Lorenzo Anthony: *See—*
Popeil, Samuel J.; and Ruiz, Lorenzo Anthony, 4,065,115, Cl. 269-16.000.
Rusco Industries, Inc.: *See—*
Riegelman, Harry M.; and Madison, Vernon Edwin, 4,064,592, Cl. 16-100.000.
Russell, Lewis K., to Signetics Corporation. Collector-up logic transmission gates. 4,065,680, Cl. 307-214.000.
Rutledge, Thomas F., to ICI Americas Inc. Method of preparing high molecular weight polyphenoxy ethers from alkyl phenols. 4,065,434, Cl. 260-47.0ET.
Ruud, Alan J.; and Lewin, Ian, to Goulet, Donald L.; and Rudd, Alan J. Indirect lighting fixture including improved reflector. 4,065,667, Cl. 362-217.000.
Ryan, Walter Samuel: *See—*
Jenkins, Oliver James; Ryan, Walter Samuel; and Suit, Leslie David, 4,064,810, Cl. 105-378.000.
Ryco Graphic Manufacturing, Inc.: *See—*
Switall, Thomas G., 4,064,801, Cl. 101-147.000.
Saari, Veikko Reynold. Crystal oscillator including a pair of push-pull complementary transistor amplifiers. 4,065,728, Cl. 331-75.000.
Saari, Walfred S.: *See—*
Denny, George H.; and Saari, Walfred S., 4,065,464, Cl. 260-326.150.
Sabol, Alexander P.: *See—*
Jenkins, Renaldo V.; and Sabol, Alexander P., 4,064,841, Cl. 123-8.470.
Safe Track Manufacturing Limited: *See—*
Roth, Bernard E., 4,065,149, Cl. 280-432.000.
Saft-Societe des Accumulateurs Fixes et de Traction: *See—*
Coibion, Jean, 4,065,603, Cl. 429-99.000.
Sagmiller, Darrell J. Slipsheet pallet tool and method. 4,065,014, Cl. 214-621.000.
Sague, John E., to Messinger Bearings, Inc. Race insert for bearing. 4,065,192, Cl. 308-215.000.
St. Clair, Terry L.: *See—*
Progar, Donald J.; Bell, Vernon L.; and St. Clair, Terry L., 4,065,345, Cl. 156-309.000.
Saint-Gobain Industries: *See—*
Ulivi, Moreno, 4,064,659, Cl. 51-277.000.
St. John, Roy H.: *See—*
Vykukal, Hubert C.; Chambers, Alan B.; and St. John, Roy H., 4,064,642, Cl. 36-92.000.
Sajben, Johannes-Otto: *See—*
Lippert, Axel; Joisten, Siegfried; and Sajben, Johannes-Otto, 4,065,339, Cl. 156-149.000.
Sakaguchi, Shinji; Imai, Shinichi; Yamaguchi, Junn; and Tsuji, Nobuo, to Fuji Photo Film Co., Ltd. Water-soluble polymers and process for producing the same. 4,065,435, Cl. 260-47.0UP.

Sakai, Shoji: *See—*
Yokohama, Masao; and Sakai, Shoji, 4,065,174, Cl. 297-66.000.
Sakamoto, Yoshimasa; Iwanari, Sadayoshi; and Umene, Osamu, to New Nippon Electric Co., Ltd. Thermal fuse with a fusible temperature sensitive pellet. 4,065,741, Cl. 337-407.000.
Salem, Eli: *See—*
Flynn, George; and Salem, Eli, 4,065,388, Cl. 210-80.000.
Salensky, George Anthony, to Union Carbide Corporation. Ethylene copolymer glass bottle coating. 4,065,590, Cl. 428-35.
Salmi, Pekka; Strom, Rolf; and Hirvisaari, Eero. Hydraulic drilling machine. 4,064,950, Cl. 173-151.000.
Sameshima, Shigeru, to Japan Port Consultants, Ltd. Marine engineering structure with wide base using a truss. 4,064,700, Cl. 61-4.000.
Samid, Ilan: *See—*
Gover, Avraham; Samid, Ilan; and Lee, Chien-Ping, 4,065,729, Cl. 331-94.50H.
Sampson Corporation, The: *See—*
Burstein, Albert H.; and Koslin, Bertram L., 4,064,567, Cl. 3-1.910.
Samuel Moore and Company: *See—*
Horvath, Louis T., 4,064,614, Cl. 29-417.000.
San Clemente, Marion R.: *See—*
Oita, Katashi; San Clemente, Marion R.; Oh, John H.; and Tiedeman, George T., 4,065,576, Cl. 424-318.000.
Oita, Katashi; San Clemente, Marion R.; Oh, John H.; and Tiedeman, George T., 4,065,577, Cl. 424-333.000.
Sanders, Antonius Hermanus. Bed side railing. 4,064,575, Cl. 5-331.000.
Sandler, Stanley Robert, to Pennwalt Corporation. Polyoxyalkylene fluoroalkyltrimellitates. 4,065,630, Cl. 560-26.000.
Sando Iron Works Co., Ltd.: *See—*
Sando, Yoshikazu; and Ishidoshiro, Hiroshi, 4,064,582, Cl. 8-149.300.
Sando, Yoshikazu; and Ishidoshiro, Hiroshi, 4,064,713, Cl. 68-5.00E.
Sando, Yoshikazu; and Ishidoshiro, Hiroshi, to Sando Iron Works Co., Ltd. Pressure sealing method. 4,064,582, Cl. 8-149.300.
Sando, Yoshikazu; and Ishidoshiro, Hiroshi, to Sando Iron Works Co., Ltd. Seal device for a high pressure steamer. 4,064,713, Cl. 68-5.00E.
Sandoz, Inc.: *See—*
Kathawala, Faizulla G., 4,065,503, Cl. 260-592.000.
Sandoz Ltd.: *See—*
Jotterand, Armand, 4,065,447, Cl. 260-163.000.
Sanford, Michael Elliot: *See—*
Detroit, William John; and Sanford, Michael Elliot, 4,065,318, Cl. 106-90.000.
Sanitatshaus Schuutt & Grundei: *See—*
Grundei, Hans; and Thomas, Wolfram, 4,064,568, Cl. 3-1.911.
Sankyo Inc.: *See—*
Kubota, Katsuyuki; Fujii, Noboru; Yamada, Kouichi; Nakamura, Kimikazu; and Yuuki, Norihito, 4,064,616, Cl. 29-429.000.
Sanshin Dengu Manufacturing Co., Ltd.: *See—*
Satoh, Taiji, 4,065,806, Cl. 362-419.000.
Santa Fe International Corporation: *See—*
Cook, William B., Jr., 4,064,968, Cl. 182-13.000.
Sare, Edward J.; and Lavanish, Jerome M., to PPG Industries, Inc. Catalytic oxidation of C_2-C_4 halogenated hydrocarbons. 4,065,543, Cl. 423-240.000.
Sasajima, Kikuo; Ono, Keiichi; Nakao, Masaru; Maruyama, Isamu; Katayama, Shigenari; Inaba, Shigeho; and Yamamoto, Hisao, to Sumitomo Chemical Company, Limited. Acylhydrazones and antipsychotic compositions thereof. 4,065,565, Cl. 424-250.000.
Sasaki, Kantaro; Ikeda, Takami; Matsuo, Tohru; and Okazaki, Takashi, to Sumitomo Metal Industries Limited. Process for dephosphorizing molten pig iron. 4,065,297, Cl. 75-52.000.
Sasaki, Masahiro: *See—*
Nakagawa, Yasuhiko; Sasaki, Masahiro; Ito, Teruyuki; and Matuoka, Tosimitu, 4,064,850, Cl. 123-75.00B.
Sasaki, Takehiko; and Nakamura, Tsutomu, to Sharp Kabushiki Kaisha. Touch sensitive electrode assembly for solid state wristwatches. 4,064,688, Cl. 58-50.00R.
Sato, Kunio: *See—*
Nakaya, Keiichi; Hirata, Suekazu; and Sato, Kunio, 4,065,270, Cl. 23-299.000.
Satoh, Taiji, to Sanshin Dengu Manufacturing Co., Ltd. Searchlight or the like. 4,065,806, Cl. 362-419.000.
Satomura, Masato, to Fuji Photo Film Co., Ltd. Functional group containing polymer and method of preparing the same. 4,065,430, Cl. 260-47.0UA.
Satterwhite, William A.; Leach, Robert M.; and Stuhler, Harold A., to Cities Service Company. Tall oil defoamer for high strength acid media. 4,065,402, Cl. 252-358.000.
Satterwhite, William A.; Leach, Robert M.; and Stuhler, Harold A., to Cities Service Company. Tall oil defoamer having a nonionic additive defoamer for high strength acid media. 4,065,403, Cl. 252-358.000.
Satterwhite, William A.; Leach, Robert M.; and Stuhler, Harold A., to Cities Service Company. Tall oil defoamer for high strength acid media. 4,065,404, Cl. 252-358.000.
Sauer, Friedrich; and Muller, Klaus, to Glyco-Metallwerke Daelen & Loos GmbH. Mounting magazine for a galvanic fixture for electroplating semicylindrical articles. 4,065,378, Cl. 204-297.00W.
Sauer, Gale E., to Roblin Industries, Inc. Stabilizer strut for suspended ceiling system. 4,064,671, Cl. 52-696.000.
Sawada, Toshio; Yamamoto, Kimihiko; and Ishikawa, Hitoshi, to Aisin Seiki Kabushiki Kaisha. Pattern indicator mechanism for a sewing machine. 4,064,817, Cl. 112-158.00F.
Say, Geoffrey R.; Baird, William C., Jr.; and Kamienski, Paul W., to Exxon Research and Engineering Company. Maintaining effective molar ratio of HF to metal pentafluoride in a hydrocarbon conversion process. 4,065,381, Cl. 208-134.000.
Sayre, James Franklin; and Smale, Karl Harvey, to Du Pont de Nemours, E. I., and Company. Warp knit product and process. 4,064,712, Cl. 66-192.000.
Sberze, Piero: *See—*
Doria, Gianfederico; Giraldi, PierNicola; Lauria, Francesco; Corno, Maria Luisa; Sberze, Piero; and Tibolla, Marcello, 4,065,467, Cl. 260-345.200.
Scammell, Frank H., to Avco Everett Research Laboratory, Inc. Energy resonating system with elimination of optical bench structure. 4,065,732, Cl. 331-94.50C.
Schaaf, Thomas K.; and Bindra, Jasjit Singh, to Pfizer Inc. 5-(2-Carboxythiophen-5-yl)-16-aryloxy-α-tetranor-ω-tetranorprostaglandins. 4,065,472, Cl. 260-332.20C.
Schaeffer, Paul R., to Alan I W Frank Corporation, The. Method for molding products from polymeric material. 4,065,530, Cl. 264-41.000.
Schaeffer, Paul R., to Alan I W Frank Corporation, The. Method for molding products from particulate polymeric material. 4,065,531, Cl. 264-41.000.
Schafer, Hermann; and Weber, Christian, to Bayer Aktiengesellschaft. Polyurethane foams having an integral skin using a mixture of polyols as the chain extender. 4,065,410, Cl. 260-2.5AM.
Schanzenbach, George P., Jr.; and Mizikar, David M., to Carrier Corporation. Trip device for a rotating machine. 4,064,764, Cl. 74-2.000.
Scheffler, Gerhard: *See—*
Emig, Peter; Pohle, Hans; Scheffler, Gerhard; Brock, Norbert; Lenke, Hans-Dieter; and Pohl, Jorg, 4,065,501, Cl. 260-570.600.
Schenker, Barry A.: *See—*
Whyte, Andrew; Gallup, William A.; Schenker, Barry A.; and Schulz, Robert A., 4,065,376, Cl. 204-263.000.
Schering Aktiengesellschaft: *See—*
Boroschewski, Gerhard; and Arndt, Friedrich, 4,065,293, Cl. 71-100.000.
Schering Corporation: *See—*
Roebke, Heide, 4,065,569, Cl. 424-273.00R.
Schick, Margery L.; and Anderson, Bror E., to Weber Marking Systems, Inc. Thermographic stencil sheet and method of making an imaged stencil sheet. 4,065,595, Cl. 428-141.000.
Schieber, Hans: *See—*
Krause, Erich; and Schieber, Hans, 4,064,711, Cl. 66-157.000.
Schindler, Henry Claude: *See—*
Stern, Herman Abraham; Sorkin, Howard; and Schindler, Henry Claude, 4,064,919, Cl. 141-7.000.
Schlaf, Richard A.: *See—*
Bistrick, Eugene J.; Abrahamsson, Axel B.; Szewczyk, Andrew J.; McCabe, Frank A.; Schlaf, Richard A.; and Gabriele, Leonard A., 4,065,222, Cl. 407-18.000.
Schlage, Ernest L., to Schlage Lock Company. Lock strike construction. 4,065,162, Cl. 292-340.000.
Schlage Lock Company: *See—*
Bartels, Vernon A., 4,065,164, Cl. 292-347.000.
Schlage, Ernest L., 4,065,162, Cl. 292-340.000.
Schlesinger, Robert J. Solar heat collector. 4,064,867, Cl. 126-271.000.
Schlicher, David W.; and Fabian, Liboslav, to Electric Machinery Mfg. Company. Pulse excitation torque amplifier. 4,065,703, Cl. 318-176.000.
Schliebs, Reinhard: *See—*
Hofer, Wolfgang; Schliebs, Reinhard; Schmidt, Robert; and Eue, Ludwig, 4,065,288, Cl. 71-76.000.
Schliefer, Heinrich; and Warnecke, Friedrich Wilhelm, to Norddeutsche Affinerie. Method of independently adjusting the fuel mixture composition and melting rate of multiburner shaft furnaces for melting metals. 4,065,250, Cl. 432-24.000.
Schlieman, Melvin Glynn: *See—*
Holland, Eugene Richard; and Schlieman, Melvin Glynn, 4,064,997, Cl. 212-39.00B.
Schlumpf, Karl: *See—*
Buhler, Arthur; Fasciati, Alfred; and Schlumpf, Karl, 4,065,254, Cl. 8-1.00C.
Schmedding, Herbert: *See—*
Achelpohl, Fritz; and Schmedding, Herbert, 4,065,049, Cl. 229-55.000.
Schmidt, Delt: *See—*
Frommer, Werner; Gericke, Horst; Keup, Uwe; Puls, Walter; Schmidt, Delt; and Wagner, Otto, 4,065,557, Cl. 424-181.000.
Schmidt, Herbert: *See—*
Bejarano, Thomas M.; Schmidt, Herbert; and Schmidt, Joseph J., 4,064,589, Cl. 16-53.000.
Schmidt, Joseph J.: *See—*
Bejarano, Thomas M.; Schmidt, Herbert; and Schmidt, Joseph J., 4,064,589, Cl. 16-53.000.
Schmidt, Melvin J.: *See—*
Andre, Michael G.; Schmidt, Melvin J.; and Osman, Kenneth L., 4,065,199, Cl. 339-17.00F.
Schmidt, Robert: *See—*
Hofer, Wolfgang; Schliebs, Reinhard; Schmidt, Robert; and Eue, Ludwig, 4,065,288, Cl. 71-76.000.
Schmidt, Robert R.: *See—*
Fest, Christa; Enders, Edgar; Eue, Ludwig; and Schmidt, Robert R., 4,065,292, Cl. 71-99.000.
Schmitt, Frederick Louis: *See—*
Evers, William J.; Heinsohn, Howard H., Jr.; Shuster, Edward J.; and Schmitt, Frederick Louis, 4,065,408, Cl. 252-522.000.
Schmitt, William C., to Milwaukee Faucets, Inc. Non-rise faucet assembly. 4,064,900, Cl. 137-315.000.
Schnabl, Martin. Broom construction. 4,064,587, Cl. 15-175.000.

Schneider, Hatto: *See—*
Giers, Alfred; Holdinghausen, Paul; Schneider, Hatto; and Widmann, Friedman, 4,064,761, Cl. 73-462.000.
Schneider, John R.; and Klyver, Kenneth B., to J.R. Schneider Co., Inc. Plate type filter apparatus. 4,065,390, Cl. 210-225.000.
Schnitzler, Alois. Stretcher. 4,064,574, Cl. 5-82.00R.
Schoenholz, Daniel: *See—*
Mackay, Donald A. M.; and Schoenholz, Daniel, 4,065,579, Cl. 426-3.000.
Schomberg, Hermann; and Heubach, Frank, to U.S. Philips Corporation. Network computer system. 4,065,808, Cl. 364-200.000.
Schrager, Morton: *See—*
Johnston, Herbert N.; Wray, Joseph A.; Robbins, Joe David; and Schrager, Morton, 4,065,304, Cl. 96-1.0LY.
Schrenk, Heinrich Maria: *See—*
Bharucha, Kekhusroo R.; Ajdukovic, Djordje; Pavilanis, Vytautas; and Schrenk, Heinrich Maria, 4,065,570, Cl. 424-273.00R.
Bharucha, Kekhusroo R.; Ajdukovic, Djordje; Pavilanis, Vytautas; and Schrenk, Heinrich Maria, 4,065,571, Cl. 424-273.00R.
Schreyer, Gerd; Tanner, Herbert; Weigert, Wolfgang; and Gora, Ullrich, to Deutsche Gold- und Silber-Scheideanstalt Vormals Roessler. Production of an alkenol from an alkene oxide. 4,065,510, Cl. 260-632.00B.
Schroter, Herbert, to Hoechst Aktiengesellschaft. Process and apparatus for transport of originals in a reproduction apparatus. 4,065,119, Cl. 271-172.000.
Schuh, Peter Otto, to Bell Telephone Laboratories, Incorporated. Power converter. 4,065,646, Cl. 179-170.00R.
Schulz, Robert A.: *See—*
Whyte, Andrew; Gallup, William A.; Schenker, Barry A.; and Schulz, Robert A., 4,065,376, Cl. 204-263.000.
Schulz, William J. Dual displacement engine. 4,064,861, Cl. 123-198.00F.
Schuman, Gordon A., to Dietzgen Corporation. Developing roller apparatus for reproduction machines. 4,064,933, Cl. 165-89.000.
Schurger, Rainer: *See—*
Ernst, Horst Manfred; Olschewski, Armin; Schurger, Rainer; Walter, Lothar; Brandenstein, Manfred; Burkl, Erich; and Kiener, Heinz, 4,065,193, Cl. 308-233.000.
Schwab, A. Henry, to Philadelphia Tramrail Company. Door latch. 4,064,650, Cl. 49-277.000.
Schweitzer, Roy C., to Addressograph Multigraph Corporation. Duplicator and method of duplicating. 4,064,804, Cl. 101-451.000.
Schwesinger, Reinhard: *See—*
Koenig, Horst; Prinzbach, Horst; and Schwesinger, Reinhard, 4,065,454, Cl. 260-250.00P.
SCM Corporation: *See—*
Ting, Vincent [illegible]-Hwa, 4,065,587, Cl. 427-54.000.
Scott & Fetzer Company, The: *See—*
Webb, Walter [illegible] 4,065,237, Cl. 417-503.000.
Scott Paper Company: *See—*
Gotchel, Joel Peter; Norton, Henry James; and Spengos, Aris C., 4,064,600, Cl. 19-156.300.
Neuenschwander, Rudolf, 4,064,599, Cl. 19-96.000.
Scott, Robert D.: *See—*
Neuhof, Jacob; and Scott, Robert D., 4,065,767, Cl. 340-384.00E.
Seaholm, Reuel A., to Montgomery Elevator Company. Decorative jamb structure for elevator entranceways. 4,064,667, Cl. 52-204.000.
Seavey, John M., to Adams-Russell Co., Inc. Broadbeam radiation of circularly polarized energy. 4,065,772, Cl. 343-786.000.
Seb S.A.: *See—*
Berard, Jean Claude, 4,065,660, Cl. 219-535.000.
Pauty, Bernard, 4,065,811, Cl. 366-244.000.
Secim: *See—*
Quehen, Andre; and Figueres, Roger, 4,064,929, Cl. 164-433.000.
Seeger, Richard E.: *See—*
Kuist, Charles H.; Squitieri, Vincent; and Seeger, Richard E., 4,065,197, Cl. 339-17.00M.
Seha, Zdenek, to Ciba-Geigy AG. Process for the manufacture of α,α'-aminonitroanthraquinones. 4,065,478, Cl. 260-382.000.
Seidel, Bernhard: *See—*
Laridon, Urbain Leopold; Delzenne, Gerard Albert; Mader, Helmut; Ulrich, Hans; and Seidel, Bernhard, 4,065,524, Cl. 260-895.000.
Seilstorfer, Helmut; Wittich, Willibald, deceased; and by Messerschmitt-Bolkow-Blohm GmbH, legal representative, to Messerschmitt-Bolkow-Blohm Gesellschaft mit beschrankter Haftung. Method of producing shaped objects. 4,065,303, Cl. 75-226.000.
Seita, Toru; and Shimizu, Akihiko, to Toyo Soda Manufacturing Co., Ltd. Polyion complex and polyion complex film. 4,065,414, Cl. 260-17.00R.
Sekiguchi, Yoshitoshi: *See—*
Okigami, Noboru; Sekiguchi, Yoshitoshi; Ito, Takusen; and Onose, Kenji, 4,065,247, Cl. 431-202.000.
Sekisui Kagaku Kogyo Kabushiki Kaisha: *See—*
Kobayashi, Mikio; and Nakano, Isamu, 4,065,342, Cl. 156-203.000.
Sekisui Kaseihin Kogyo Kabushiki Kaisha: *See—*
Yamai, Fumito; Ishida, Tomohiko; and Ikeda, Yoshinori, 4,065,411, Cl. 260-2.50B.
Selin, Terry G., to General Electric Company. Siloxanediolate complexes and preparation thereof. 4,065,482, Cl. 260-448.20E.
Sellinger, Du Wayne M.: *See—*
Wolbrink, David W.; Budyak, Robert J.; Sellinger, Du Wayne M.; and Kaepernick, William A., 4,064,798, Cl. 100-229.00A.
Selwitz, Charles M.: *See—*
Bacha, John D.; Matthews, Joseph S.; and Selwitz, Charles M., 4,065,470, Cl. 260-346.750.
Semel, Frederick J., to Alan Wood Steel Company. Rolled low carbon niobium steel. 4,065,331, Cl. 148-36.000.
Sendov, Stoyan Hristov; Nikolov, Ivan Angelov; Kuklin, Ivan Alexandrov; and Mirchev, Mircho Georgiev, to Chimkombinat. Conical centrifuge with continuous action. 4,065,393, Cl. 210-377.000.
Senger, Stephen J., to United States of America, Navy. Negative feedback amplifier and lever shifter. 4,065,726, Cl. 330-288.000.
Seppala, Earl Edwin: *See—*
Contractor, Rashmikant Maganlal; Dodson, William Carter, Jr.; Hentges, James John; and Seppala, Earl Edwin, 4,064,597, Cl. 19-156.300.
Seres, Jeno: *See—*
Pfliegel, Todor; Seres, Jeno; Gajary, Antal; Daroczy nee Csuka, Klara; and Nagy, Lajos T., 4,065,491, Cl. 260-502.500.
Serres, Carl, Jr., to Standard Oil Company (Indiana). Malonate ester chain coupling of polyesters. 4,065,440, Cl. 260-75.00R.
Servco Company, a division of Smith International, Inc., The: *See—*
Weber, Robert W., 4,064,951, Cl. 175-45.000.
Severinsen, John, to Metex Corporation. Metal mesh strip and embedded fin gasket for shielding against electromagnetic interference. 4,065,138, Cl. 277-230.000.
Seymour, Harold Henry: *See—*
Busdiecker, Wayne Scott; and Seymour, Harold Henry, 4,064,913, Cl. 138-125.000.
Shaner, Richard L.: *See—*
Ruark, Bruce J.; and Shaner, Richard L., 4,065,027, Cl. 220-343.000.
Sharp, John C.: *See—*
Moon, Malcolm W.; and Sharp, John C., 4,065,574, Cl. 424-283.000.
Sharp Kabushiki Kaisha: *See—*
Sasaki, Takehiko; and Nakamura, Tsutomu, 4,064,688, Cl. 58-50.00R.
Shasby, Patrick J.: *See—*
Kattner, Lionel E.; Youmans, Albert P.; and Shasby, Patrick J., 4,065,717, Cl. 324-158.00P.
Shearlock, David A.: *See—*
Chadwick, Ronald M.; and Shearlock, David A., 4,065,004, Cl. 214-36.000.
Sheffield, George V., to United States of America, Energy. Vertically stabilized elongated cross-section tokamak. 4,065,350, Cl. 176-3.000.
Sheinin, Viktor Efimovich: *See—*
Rizaev, Ramiz Gasan Kuli ogly; Mekhtiev, Soltan Dzhafarovich; Magerramova, Zemfira Jusif kyzy; Sheinin, Viktor Efimovich; Mirataev, Mirabdulla Mirakhmed ogly; and Guseinov, Idris Aslan ogly, 4,065,487, Cl. 260-465.00C.
Shell Canada Limited: *See—*
Prats, Michael, 4,064,942, Cl. 166-303.000.
Shell Explorer Limited: *See—*
Prats, Michael, 4,064,942, Cl. 166-303.000.
Shell, Irving Wardell. Upright and bracket arrangement. 4,065,088, Cl. 248-242.000.
Shell Oil Company: *See—*
Cavin, Daniel C., 4,064,943, Cl. 166–281.
De Beukelaar, Jan W.; Van Zwet, Henry; and Roest, Jacob B., 4,065,610, Cl. 526-70.000.
Kim, Leo; Paxson, Timm E.; and Tang, Sunny C., 4,065,505, Cl. 260-600.00R.
McClure, James D.; and Brandenberger, Stanley G., 4,065,515, Cl. 260-683.680.
Potter, Richard C., 4,065,555, Cl. 424-83.000.
Powell, James E., 4,065,560, Cl. 424-246.000.
Soonawala, Homi D.; and den Broeder, Steven E., 4,065,379, Cl. 208-67.000.
Srinivasan, Krishnaswamy, 4,064,763, Cl. 73-516.00R.
Wicks, Moye, III; Kubitschek, Hans E.; and King, William E., 4,064,572, Cl. 4-227.000.
Shenoy, Umakant Devdas, to DDSA Pharmaceuticals Limited. 1,4-Benzodiazepine-2-amine derivatives. 4,065,474, Cl. 260-347.700.
Sherrill, John F. Injector for introducing a liquid into the cylinders of an internal combustion engine. 4,064,842, Cl. 123-25.00L.
Shibagaki, Masahiro: *See—*
Ogawa, Kazuyuki; Hirose, Masahiko; Shibagaki, Masahiro; Murakami, Yoshio; and Horiike, Yasuhiro, 4,065,369, Cl. 204-164.000.
Shibata, Norio, to Toyota Jidosha Kogyo Kabushiki Kaisha. Secondary air supply system for internal combustion engines. 4,064,693, Cl. 60-290.000.
Shields, Theodore C., to Ashland Oil, Inc. Multiple metal deactivators, method for preparing, and use thereof. 4,065,498, Cl. 260-566.00F.
Shigemori, Youjiro; and Mitumori, Yoshio, to Star Seimitsu Kabushika Kaisha. Transistor blocking oscillator stabilized against changes in bias voltage and temperature. 4,065,733, Cl. 331-112.000.
Shii, Hikaru; and Oda, Eisuke, to Furukawa Electric Co. Ltd., The. Method of shaping oriented materials of polyolefin. 4,065,594, Cl. 428-113.000.
Shiley Laboratories, Inc.: *See—*
Johnson, George Michael; Krueger, Kenneth Keith; and Pavlov, Todor, 4,064,882, Cl. 128-351.000.
Lewin, John Edward, 4,065,264, Cl. 23-258.5BH.
Shillum, Robert L., to Shillum, Robert L. Rack system. 4,064,996, Cl. 211-191.000.
Shimazaki, Seiichi: *See—*
Iwasaka, Tatsuo; Kaneko, Takashi; and Shimazaki, Seiichi, 4,064,971, Cl. 187-29.00R.

Shimizu, Akihiko: *See—*
Seita, Toru; and Shimizu, Akihiko, 4,065,414, Cl. 260-17.00R.
Shimoyama, Kunio: *See—*
Maitani, Yoshihisa; Shimoyama, Kunio; Yoshida, Muneaki; Hashimoto, Akihiko; and Kitagawa, Masahiro, 4,065,777, Cl. 354-23.00R.
Shinosky, Leonard W., Jr. Electro-optical and electronic switching systems. 4,065,644, Cl. 179-18.0GF.
Shippey, Frederick Lee, to Eastman Kodak Company. Bleach-fix regeneration monitoring method. 4,065,313, Cl. 96-60.0BF.
Shiroyama Kogyo Co., Ltd.: *See—*
Ohnaka, Makoto, 4,065,001, Cl. 214-1.0BV.
Shoemaker, Brian C. Demountable extension enclosure for motor vehicles. 4,065,166, Cl. 296-23.00G.
Showa Koji K.K.: *See—*
Murakami, Norio, 4,064,960, Cl. 181-210.000.
Shuster, Edward J.: *See—*
Evers, William J.; Heinsohn, Howard H., Jr.; Shuster, Edward J.; and Schmitt, Frederick Louis, 4,065,408, Cl. 252-522.000.
Shutterly, Harold B., to Westinghouse Electric Corporation. Playback technique for an audio-video program wherein the video display is controlled by signals recorded as a part of the audio program. 4,065,794, Cl. 360-10.000.
Shutterly, Harold B., to Westinghouse Electric Corporation. Recording technique for an audio/video program wherein the audio incorporates video change signals. 4,065,795, Cl. 360-35.000.
Shwayder Company, The: *See—*
Shwayder, Warren M.; and Loftus, John T., 4,064,716, Cl. 70-38.00A.
Shwayder, Warren M.; and Loftus, John T., to Shwayder Company, The. Saw resistant lock. 4,064,716, Cl. 70-38.00A.
Siddall, Keith, to Osborn-Mushet Tools Limited. Twist drills. 4,065,224, Cl. 408-230.000.
Siegel, Eric. Video processing amplifier providing black level correction. 4,065,790, Cl. 358-172.000.
Siegelman, Abe: *See—*
Deisenroth, Norbert F.; Nordhaus, John P.; and Siegelman, Abe, 4,064,751, Cl. 73-207.000.
Siegwart, Hans-Rudolf; and Kaser, Rene, to Bureau BBR Ltd. Wedge push-in apparatus for a wire tensioning press. 4,065,098, Cl. 254-29.00A.
Siemens Aktiengesellschaft: *See—*
Ruhrnschopf, Ernst-Peter; and Linke, Gerhard, 4,065,397, Cl. 250-445.00T.
Siemens-Albis Aktiengesellschaft: *See—*
Pacozzi, Pierino, 4,065,769, Cl. 343-17.700.
Sieverin, Walter Joseph, to American Can Company. Laboratory stand assembly. 4,064,737, Cl. 73-17.00R.
Sigmatex, A.G.: *See—*
Weman, Per Olaf, 4,065,069, Cl. 242-107.40A.
Signetics Corporation: *See—*
Kattner, Lionel E.; Youmans, Albert P.; and Shasby, Patrick J., 4,065,717, Cl. 324-158.00P.
Russell, Lewis K., 4,065,680, Cl. 307-214.000.
Sikorra, Daniel J., to Honeywell Inc. Magnetically suspended angular momentum wheel. 4,065,189, Cl. 308-10.000.
Siletto, Giorgio; Bena, Piero; and Cestari, Bruno, to Ing. C. Olivetti & C., S.p.A. Sheet detaching device for electrophotographic copying machine. 4,065,121, Cl. 271-174.000.
Simmons, Gerald P.: *See—*
Amdall, John K.; and Simmons, Gerald P., 4,064,769, Cl. 74-878.000.
Stedman, Robert N.; and Simmons, Gerald P., 4,064,959, Cl. 180-139.000.
Simmons, James E.: *See—*
Whitted, Robert L.; and Simmons, James E., 4,064,686, Cl. 57-140.00J.
Simms, John E., to Design & Funding, Inc. Power steering pump bracket tool. 4,064,613, Cl. 29-407.000.
Simon, Helmut: *See—*
Hofer, Gerald; Bofinger, Gunter; Nothdurft, Heinz; Khosrawi, Mohammad-Ali; Simon, Helmut; and Konrath, Karl, 4,065,236, Cl. 417-493.000.
Simplex Filler Company: *See—*
Lydiksen, George C., 4,065,032, Cl. 222-77.000.
Singer Company, The: *See—*
Cummings, Thomas R.; and Mazza, Anthony J., Jr., 4,064,640, Cl. 35-12.00K.
Jaffe, Wolfgang; and Peterson, Wesley Robinson, 4,065,739, Cl. 335-234.000.
Singer, Richard M.: *See—*
Boeckman, Maynard A.; and Singer, Richard M., 4,064,719, Cl. 70-355.000.
Single Buoy Moorings Inc.: *See—*
Vogt, Christoph, 4,064,820, Cl. 114-74.00R.
Sinnema, Hendrik, to Machinefabriek W. Hubert & Co. B.V. Apparatus for manufacturing molded articles from a kneadable material, e.g., clay. 4,065,238, Cl. 425-94.000.
Sironval, Cyrille: *See—*
Dujardin, Esther; Kuiper, Ysbrand; Cremer, Rene; and Sironval, Cyrille, 4,065,310, Cl. 96-27.00R.
Skaggs, Frank L.: *See—*
Adcock, Willis A.; and Skaggs, Frank L., 4,065,785, Cl. 358-44.000.
Skare, Helge; and Hirschberg, Henry. Procedure and means for collecting liquid containing radioactive tracer elements. 4,065,383, Cl. 210-27.000.
SKF Industrial Trading and Development Company, B.V.: *See—*
Ernst, Horst Manfred; Olschewski, Armin; Schurger, Rainer; Walter, Lothar; Brandenstein, Manfred; Burkl, Erich; and Kiener, Heinz, 4,065,193, Cl. 308-233.000.
Hallerback, Stig Lennart, 4,065,190, Cl. 308-15.000.
SKF Industries, Inc.: *See—*
Kellstrom, Erik Magnus, 4,065,191, Cl. 308-202.000.
Skirvin, Willard L.: *See—*
Petersen, Virgil F.; and Skirvin, Willard L., 4,064,898, Cl. 137-240.000.
Sliwa, Robert A.; and Golden, Edward J., to Bendix Corporation, The. Digital apparatus for setting the voltage across a capacitor. 4,065,709, Cl. 320-1.000.
Sloan, Kenneth B.: *See—*
Bodor, Nicolae S.; Sloan, Kenneth B.; and Hussain, Anwar A., 4,065,566, Cl. 424-266.000.
Slobodyanik, Ivan Petrovich. Column apparatus for gas-liquid heat and mass exchange processes. 4,065,528, Cl. 261-114.00R.
Sly, Steve R. Alarm device for a campsite. 4,064,825, Cl. 116-81.000.
Smale, Karl Harvey: *See—*
Sayre, James Franklin; and Smale, Karl Harvey, 4,064,712, Cl. 66-192.000.
Smith, Charles G., to Upjohn Company, The. Tubercidin preparation. 4,065,556, Cl. 424-181.000.
Smith, Donald M. Apparatus and method for mixing separated fluids downhole. 4,064,941, Cl. 166-300.000.
Smith, Frederick W.: *See—*
Palfreeman, John S.; Redwood, Martin; Smith, Frederick W.; and Mitchell, Richard F., 4,065,735, Cl. 333-72.000.
Smith, Harry: *See—*
Buckle, Derek Richard; Cantello, Barrie Christian Charles; and Smith, Harry, 4,065,457, Cl. 260-289.00K.
Smith, James A.: *See—*
Huffman, Jerry P.; LaForest, John P.; Petit, William A.; and Smith, James A., 4,065,081, Cl. 246-34.00R.
Smith, Lester L. Top guide pivot for bifold doors. 4,064,590, Cl. 16-90.000.
Smith, Spencer E.; and Marek, Donald C., to International Harvester Company. Detent mechanism with arc travel limiter. 4,064,768, Cl. 74-528.000.
SmithKline Instruments, Inc.: *See—*
Reynolds, Charles A., 4,064,741, Cl. 73-620.000.
Snamprogetti, S.p.A.: *See—*
Cecere, Francesco; Galli, Giuliano; Della Penna, Gino; and Rappuoli, Bruno, 4,065,353, Cl. 195-2.000.
Snow, Frederick Orren, III: *See—*
Cunningham, James Thomas; Snow, Frederick Orren, III; April, Joseph Richard; and Yu, A. Tobey, 4,065,002, Cl. 214-14.000.
Sobozenski, Theodore M.; and Stupak, Raymond E., to Sprague Electric Company. Method for terminating solid electrolyte capacitors. 4,064,611, Cl. 29-270.000.
Societe Anonyme de Telecommunications: *See—*
Provendier, Jacques Henri, 4,065,641, Cl. 179-15.0AT.
Societe Anonyme Francaise du Ferodo: *See—*
Filderman, Rene, 4,064,974, Cl. 188-71.300.
Filderman, Rene Gabriel, 4,064,975, Cl. 188-73.500.
Societe de Diffusion NEIMAN: *See—*
Neiman, Michel, 4,064,717, Cl. 70-165.000.
Societe de Vente de l'Aluminium Pechiney: *See—*
Nicoud, Jean-Claude, 4,065,326, Cl. 148-2.000.
Quehen, Andre; and Figueres, Roger, 4,064,929, Cl. 164-433.000.
Societe des Accumulateurs Fixes et de Traction: *See—*
Godard, Pierre; and Lapuyade, Robert Henri, 4,065,712, Cl. 320-39.000.
Societe des Establissements Hugonnet: *See—*
Cainaud, Henri, 4,065,022, Cl. 220-71.000.
Societe Nationale des Poudres et Explosifs: *See—*
Lorson, Pierre Michel; and Dumas, Bernard Roger, 4,065,332, Cl. 149-19.900.
Societe Suisse pour l'Industrie Horlogere Management Services S.A.: *See—*
Erni, Bruno; and Meister, Pierre-Andre, 4,065,651, Cl. 200-5.00A.
Solden, LeRoy, to Widen Tool & Stamping, Inc. Mountable attachment. 4,065,087, Cl. 248-201.000.
Sommer, August: *See—*
Wessendorf, Richard; Sommer, August; and Birkelbach, Heinrich, 4,065,506, Cl. 260-601.00R.
Sonetaka, Kazunori: *See—*
Nishino, Atsushi; Sonetaka, Kazunori; and Kimura, Kunio, 4,065,406, Cl. 252-443.000.
Soonawala, Homi D.; and den Broeder, Steven E., to Shell Oil Company. Process for the production of normally gaseous olefins. 4,065,379, Cl. 208-67.000.
Sorkin, Howard: *See—*
Stern, Herman Abraham; Sorkin, Howard; and Schindler, Henry Claude, 4,064,919, Cl. 141-7.000.
Soulsby, John E.; and Malecha, Richard J., to Towmotor Corporation. Noise enclosure for hydraulic valve. 4,064,903, Cl. 137-375.000.
SouthCom, Inc.: *See—*
Spinks, Maurice H., Sr.; and Juge, Yvon E., 4,065,092, Cl. 248-503.000.
Spanel, Abram N.; Eiland, P. Frank; and Jacobs, David R., to Spanel, Abram N. Double select needle tufting machine. 4,064,816, Cl. 112-79.00A.
Spangler, Paul Joseph, to International Telephone and Telegraph

Corporation. Separable funnel guide and crimping die assembly. 4,064,624, Cl. 29-753.000.
Spaniola, James W.: *See—*
Duncan, Eugene G.; and Spaniola, James W., 4,065,750, Cl. 340-58.000.
Sparks, Buddy G.: *See—*
Murphy, Frank W., Jr.; and Sparks, Buddy G., 4,064,752, Cl. 73-302.000.
Sparlin, Derry D., to Continental Oil Company. Water control with polymers. 4,064,940, Cl. 166-295.000.
Sparwald, Volker: *See—*
Weckesser, Ernst; Sparwald, Volker; Reh, Lothar; Bohm, Eberhard; and Graf, Rolf, 4,065,271, Cl. 55-2.000.
Speece, Richard E. Gas flow totalizer. 4,064,750, Cl. 73-194.00R.
Spengos, Aris C.: *See—*
Gotchel, Joel Peter; Norton, Henry James; and Spengos, Aris C., 4,064,600, Cl. 19-156.300.
Sperry Rand Corporation: *See—*
Anderson, David Robert; Anderson, Wilbert Cleon; and Jenkins, Vaughn Junior, 4,065,074, Cl. 242-184.000.
Minden, Henry T., 4,065,730, Cl. 331-94.50H.
Paccione, Sebastian W.; and Risnychok, Theodore J., 4,064,800, Cl. 101-93.140.
Spielberger, Georg; Wunderlich, Hermann; Klag, Gunther; and Zlokarnik, Marko, to Bayer Aktiengesellschaft. Process for preparing aminonaphthalene derivatives in a titanium or titanium alloy reactor. 4,065,492, Cl. 260-508.000.
Spinks, Maurice H., Sr.; and Juge, Yvon E., to SouthCom, Inc. Quick release security latch device for radio antenna base. 4,065,092, Cl. 248-503.000.
Spinner, David, to Unisette Realty Ltd. Combination lawn mower, snow blower and lawn sweeper. 4,064,679, Cl. 56-2.000.
Spitz, Eric: *See—*
Micheron, Francois; Doriath, Gerard; and Spitz, Eric, 4,065,677, Cl. 307-112.000.
Spitzer, Wayne Alfred, to Eli Lilly and Company. Process for 3-H-3-cephem esters. 4,065,618, Cl. 544-16.000.
Spitzer, Wayne Alfred, to Eli Lilly and Company. Process for 3-alkyl and 3-phenyl cephalosporins. 4,065,621, Cl. 544-30.000.
Sprague Electric Company: *See—*
Sobozenski, Theodore M.; and Stupak, Raymond E., 4,064,611, Cl. 29-270.000.
Sprecher & Schuh AG: *See—*
Unterweger, Heinz; and Gremaud, Maurice, 4,065,805, Cl. 361-196.000.
Sprunck, E.: *See—*
Leroy, Pierre; and Sprunck, Emile, 4,065,159, Cl. 285-136.000.
Sprunck, Emile: *See—*
Leroy, Pierre; and Sprunck, Emile, 4,065,159, Cl. 285-136.000.
Square D Company: *See—*
Clarke, Geoffrey, 4,065,683, Cl. 307-264.000.
Squitieri, Vincent: *See—*
Kuist, Charles H.; Squitieri, Vincent; and Seeger, Richard E., 4,065,197, Cl. 339-17.00M.
Srinivasan, Krishnaswamy, to Shell Oil Company. Accelerometer for measuring pump rod displacement. 4,064,763, Cl. 73-516.00R.
Stal-Laval Turbin AB: *See—*
Wikner, Jan Christer, 4,064,762, Cl. 73-487.000.
Standard Modern Tool Company Limited: *See—*
Maddock, William Harvard, 4,064,774, Cl. 82-45.000.
Standard Oil Company: *See—*
Fields, Ellis K.; Zimmerschied, Wilford J.; and Palmer, David A., 4,065,442, Cl. 260-78.410.
Grasselli, Robert K.; Suresh, Dev D.; and Miller, Robert C., 4,065,468, Cl. 260-346.750.
Hardman, Harley F.; Callahan, James L.; and Grasselli, Robert K., 4,065,507, Cl. 260-604.00R.
Standard Oil Company (Indiana): *See—*
Bateman, Mark E.; and Palmer, Jeffrey T., 4,065,349, Cl. 162-158.000.
Fast, Clarence R., 4,064,938, Cl. 166-236.000.
Serres, Carl, Jr., 4,065,440, Cl. 260-75.00R.
Stanfield, Zenas Allen, to Ciba-Geigy AG. Apparatus for drying seeds. 4,064,638, Cl. 34-174.000.
Stapp, Willis J.; and Honnert, Quentin E., to Multifold-International, Inc. Machine for opening, inspecting and packing a folding carton. 4,064,675, Cl. 53-54.000.
Star Seimitsu Kabushika Kaisha: *See—*
Shigemori, Youjiro; and Mitumori, Yoshio, 4,065,733, Cl. 331-112.000.
Stedman, Robert N.; and Simmons, Gerald P., to Caterpillar Tractor Co. Steering arrangement for a double articulated wheel tractor. 4,064,959, Cl. 180-139.000.
Steere, Stephen D. Tennis ball holder. 4,065,040, Cl. 224-5.00D.
Stegavig, Clifford Arnold; and Stringer, David McNair. Wrap-around roof rack. 4,065,041, Cl. 224-42.10D.
Steierman, Bernard L., to Owens-Illinois, Inc. Cathode-ray tube. 4,065,696, Cl. 313-480.000.
Steierman, Bernard L., to Owens-Illinois, Inc. Cathode-ray tube. 4,065,697, Cl. 313-480.000.
Stein, Robert R., to Hardware Designers, Inc. Positive action front release drawer slide assembly. 4,065,196, Cl. 312-333.000.
Steinke, Leo: *See—*
Hacker, Wolf-Dieter; Friese, Karl-Hermann; Steinke, Leo; and Weyl, Helmut, 4,065,372, Cl. 204-195.00S.
Steinstrasser, Rolf; and Del Pino, Fernando, to Merck Patent Gesellschaft mit beschrankter Haftung. Biphenyl esters and liquid crystalline mixtures comprising them. 4,065,489, Cl. 560-59.000.
Stephens, James B.: *See—*
Fletcher, James C.; Miller, Charles G.; and Stephens, James B., 4,065,053, Cl. 237-1.00A.
Stephens, Raymond E., Jr. Evaporative roof cooling system. 4,064,706, Cl. 62-64.000.
Sterling Drug Inc.: *See—*
Dickinson, William B., 4,065,471, Cl. 260-326.00N.
Jefferies, Patrick J.; and Crounse, Nathan N., 4,065,500, Cl. 260-567.60M.
Stern, Herman Abraham; Sorkin, Howard; and Schindler, Henry Claude, to RCA Corporation. Method of filling dynamic scattering liquid crystal devices. 4,064,919, Cl. 141-7.000.
Stern, Louis P., to Westinghouse Electric Corporation. Boiler control having a heating value computer and providing improved operation with fuels having variable heating values. 4,064,698, Cl. 60-664.000.
Stewart, John A.; Hynes, Roy G.; Beyerlein, David G.; and Force, John B., to General Motors Corporation. Warning circuit for a tractor/-trailer combination. 4,065,751, Cl. 340-58.000.
Stewart-Warner Corporation: *See—*
Fontana, Frank J., 4,065,176, Cl. 297-304.000.
Stewart, Wilber Clarence, to RCA Corporation. Videodisc playback system. 4,065,786, Cl. 358-128.000.
Stifab AB: *See—*
Nilsson, Allan Elvir, 4,064,905, Cl. 137-499.000.
Stokes, Alvin R. Billiard glove. 4,064,563, Cl. 2-161.00A.
Stoner, Glenn E.; and Zardiackas, Lyle D., to University of Virginia, The. Cavity liner for dental restorations. 4,064,629, Cl. 32-15.000.
Stoppani S.A., Establissements pour la mecanique de precision et l'electro-mecanique: *See—*
Rouiller, Jean Marie, 4,065,640, Cl. 179-7.1TP.
Storage Technology Corporation: *See—*
Kaczeus, Steven L., 4,065,799, Cl. 360-135.000.
Straitz, John F., III; and Mendoza, Vicente A., to National Airoil Burner Co., Inc. Ground flare. 4,065,248, Cl. 431-202.000.
Strathearn Audio Limited: *See—*
Ridler, Keith Douglas; Gosling, Alexander Bennett; and Edge, Gordon Malcolm, 4,065,188, Cl. 308-10.000.
Stratienko, Andrew. Liquid pump sealing system. 4,065,232, Cl. 417-368.000.
Strelitz, Robert A.: *See—*
Grier, Nathaniel; Dybas, Richard A.; and Strelitz, Robert A., 4,065,497, Cl. 260-563.00P.
Strella, Stephen: *See—*
Jelfo, Raymond L.; Strella, Stephen; and Hamilton, Willard C., 4,065,585, Cl. 427-11.000.
Strickland, John C.: *See—*
MacLean, John P.; and Strickland, John C., 4,064,756, Cl. 73-349.000.
Strike, Donald Peter, to American Home Products Corporation. 15-Substituted prostanoic acids. 4,065,494, Cl. 260-514.00D.
Stringer, David McNair: *See—*
Stegavig, Clifford Arnold; and Stringer, David McNair, 4,065,041, Cl. 224-42.10D.
Strom, Rolf: *See—*
Salmi, Pekka; Strom, Rolf; and Hirvisaari, Eero, 4,064,950, Cl. 173-151.000.
Stuhler, Harold A.: *See—*
Satterwhite, William A.; Leach, Robert M.; and Stuhler, Harold A., 4,065,402, Cl. 252-358.000.
Satterwhite, William A.; Leach, Robert M.; and Stuhler, Harold A., 4,065,403, Cl. 252-358.000.
Satterwhite, William A.; Leach, Robert M.; and Stuhler, Harold A., 4,065,404, Cl. 252-358.000.
Stumpe, Warren R., to Rexnord Inc. Label system for package and baggage handling. 4,065,343, Cl. 156-212.000.
Stupak, Raymond E.: *See—*
Sobozenski, Theodore M.; and Stupak, Raymond E., 4,064,611, Cl. 29-270.000.
Stupperich, Robert: *See—*
Pels-Leusden, Carl Otto; Stupperich, Robert; Weber, Hans-Bernd; and Reinders, Rudi, 4,064,639, Cl. 34-212.000.
Stutzinger, Ferdinand: *See—*
Bohn, Hans; and Stutzinger, Ferdinand, 4,065,445, Cl. 260-112.00B.
Subramanian, Kohur Nagaraja; and Glaum, Gerald Vernon, to International Nickel Company, Inc., The. Two stage leaching of limonitic ore and sea nodules. 4,065,542, Cl. 423-35.000.
Suddeutsche Kuhlerfabrik Julius Fr. Behr: *See—*
Patt, Rolf; and Jenz, Siegfried, 4,064,848, Cl. 123-41.540.
Sugisaki, Tsutomu; and Watanabe, Hideomi, to Fuji Photo Film Co., Ltd. Cleaning cartridge. 4,065,798, Cl. 360-128.000.
Suhara, Manabu: *See—*
Oda, Yoshio; Suhara, Manabu; and Endo, Eiji, 4,065,366, Cl. 204-98.000.
Suit, Leslie David: *See—*
Jenkins, Oliver James; Ryan, Walter Samuel; and Suit, Leslie David, 4,064,810, Cl. 105-378.000.
Sumitomo Bayer Urethane Co., Ltd.: *See—*
Kataoka, Yushin; Harada, Tetsuo; and Takagi, Kenji, 4,065,362, Cl. 203-58.000.
Sumitomo Chemical Company, Limited: *See—*
Sasajima, Kikuo; Ono, Keiichi; Nakao, Masaru; Maruyama, Isamu; Katayama, Shigenari; Inaba, Shigeho; and Yamamoto, Hisao, 4,065,565, Cl. 424-250.000.

Sumitomo Metal Industries Limited: *See—*
Sasaki, Kantaro; Ikeda, Takami; Matsuo, Tohru; and Okazaki, Takashi, 4,065,297, Cl. 75-52.000.
Sun Oil Company of Pennsylvania: *See—*
Gayle, Harold R.; and Wagner, Walter D., 4,064,889, Cl. 137-68.00R.
Sun, Robert J.; and Maltby, Frederick L., to Drexelbrook Controls, Inc. RF admittance measuring method and apparatus for determining the level of a conductive liquid. 4,064,753, Cl. 73-304.00C.
Sunbury, Robert: *See—*
Brossi, Arnold; Pecherer, Benjamin; and Sunbury, Robert, 4,065,473, Cl. 260-340.50R.
Sund, Joseph T., to A. B. Dick Company. Apparatus for sensing the concentration of toner in a developer mix. 4,064,834, Cl. 118-646.000.
Sunkist Growers, Inc.: *See—*
Nelson, Denny B., 4,065,614, Cl. 536-2.000.
Super Strut, Inc.: *See—*
Biggane, John D., 4,065,218, Cl. 403-71.000.
Suresh, Dev D.: *See—*
Grasselli, Robert K.; Suresh, Dev D.; and Miller, Robert C., 4,065,468, Cl. 260-346.750.
Suzuki, Seigo; and Eguchi, Seiji, to Tokyo Shibaura Electric Co., Ltd. Synchronous transmission control system. 4,065,639, Cl. 178-69.100.
Suzuki, Yasoji; Tokumaru, Yukuya; and Nakai, Masanori, to Tokyo Shibaura Electric Co., Ltd. Semiconductor latch circuit using integrated logic units and Schottky diode in combination. 4,065,187, Cl. 307-279.000.
Svenska Sockerfabriks AB: *See—*
Glifberg, Nils Bertil, 4,064,681, Cl. 56-121.450.
Svensson, Sven-Hakan: *See—*
Eklund, John Folke; and Svensson, Sven-Hakan, 4,064,787, Cl. 89-34.000.
Swan, Walter B. Polygonal carton with bottom reinforcement and blank therefor. 4,065,047, Cl. 229-41.00C.
Swanson, Harold, to Baker Brush Co., Inc. Paint brush merchandising display. 4,064,991, Cl. 211-49.00R.
Sweezey, Charles R. Fence attachment. 4,065,103, Cl. 256-11.000.
Swenson, John Gordon. Curb box. 4,064,902, Cl. 137-370.000.
Swenson, Rudolph E. Tongue blade for mouth gag. 4,064,873, Cl. 128-12.000.
Swett, Alan M.; and Swift, Roderick D., to United States of America, Health, Education and Welfare. Cable handling. 4,065,066, Cl. 242-47.120.
Swift, Harold E.; and Vogel, Roger F., to Gulf Research & Development Company. Hydrodenitrification using a tungsten containing Ni-SMM composite catalyst. 4,065,380, Cl. 208-89.000.
Swift, Roderick D.: *See—*
Swett, Alan M.; and Swift, Roderick D., 4,065,066, Cl. 242-47.120.
Switall, Thomas G., to Ryco Graphic Manufacturing, Inc. Spray dampening system for offset printing. 4,064,801, Cl. 101-147.000.
Syaskin, Jury Mikhailovich: *See—*
Beizerov, Semen Moiseevich; Vyboischikov, Felix Petrovich; Bloshenko, Vladimir Viktorovich; and Syaskin, Jury Mikhailovich, 4,065,634, Cl. 13-10.000.
Sybron Corporation: *See—*
Farabaugh, Patrick, 4,065,391, Cl. 210-274.000.
Syntex Puerto Rico, Inc.: *See—*
Lundquist, Ingemar H., 4,064,878, Cl. 128-206.000.
Syntex (U.S.A.) Inc.: *See—*
Li, Tsung-tee; Marx, Michael; and Throop, Lewis J., 4,065,452, Cl. 260-239.55D.
Syva Company: *See—*
Ullman, Edwin F.; and Rubenstein, Kenneth E., 4,065,354, Cl. 195-63.000.
Szasz, Kalman: *See—*
Lorincz, Csaba; Szasz, Kalman; Bolyos, Maria; Jovanovics, Karola; Szporny, Laszlo; Karpati, Egon; and Palosi, Eva, 4,065,458, Cl. 260-293.550.
Szewczyk, Andrew J.: *See—*
Bistrick, Eugene J.; Abrahamsson, Axel B.; Szewczyk, Andrew J.; McCabe, Frank A.; Schlaf, Richard A.; and Gabriele, Leonard A., 4,065,222, Cl. 407-18.000.
Szporny, Laszlo: *See—*
Lorincz, Csaba; Szasz, Kalman; Bolyos, Maria; Jovanovics, Karola; Szporny, Laszlo; Karpati, Egon; and Palosi, Eva, 4,065,458, Cl. 260-293.550.
Taborsky, Jiri. Aquatic tank. 4,064,836, Cl. 119-3.000.
Tachibana, Katsuhiko: *See—*
Masui, Akira; Yamada, Kenzo; Ninomiya, Akinori; Tachibana, Katsuhiko; and Kato, Yoshihiro, 4,065,298, Cl. 75-60.000.
Taga Electric Co., Ltd.: *See—*
Mishiro, Shoji, 4,065,687, Cl. 310-314.000.
Takagi, Kenji: *See—*
Kataoka, Yushin; Harada, Tetsuo; and Takagi, Kenji, 4,065,362, Cl. 203-58.000.
Takahashi, Kooji; Kojima, Tatsuji; Ishikawa, Teruo; Nakamura, Kimio; and Ikenaga, Shizuyoshi, to Toray Industries, Inc. Process for polymeric modification of a fiber. 4,065,598, Cl. 428-394.000.
Takahashi, Norio: *See—*
Tsuneki, Takao; Takahashi, Norio; and Tashiro, Hirohisa, 4,065,387, Cl. 210-62.000.
Takahashi, Yutaka; Hakamata, Yoshio; and Konno, Masamitu, to Fuji Photo Film Co., Ltd. Microfilm inserter. 4,064,677, Cl. 53-123.000.
Takamiya, Kikuzo: *See—*
Ohtani, Kiyoshi; and Takamiya, Kikuzo, 4,064,972, Cl. 188-24.000.
Takasaki, Takao. Nursing carriage. 4,065,179, Cl. 297-384.000.
Takeda Chemical Industries, Ltd.: *See—*
Horii, Satoshi; Kameda, Yukihiko; and Mizokami, Nariakira, 4,065,615, Cl. 536-10.000.
Morimoto, Shiro; Nomura, Hiroaki; Fugono, Takeshi; and Minami, Isao, 4,065,619, Cl. 544-25.000.
Takemura, Seiji: *See—*
Torigoe, Masao; Mori, Kunihito; Tsuchiya, Mitsuru; and Takemura, Seiji, 4,065,233, Cl. 417-368.000.
Takeno, Shouzo; Mashita, Masao; and Onodera, Toshihiro, to Tokyo Shibaura Electric Co., Ltd. Elastic surface wave devices. 4,065,734, Cl. 333-30.00R.
Takeshita, Kanou: *See—*
Miura, Genmei; and Takeshita, Kanou, 4,065,754, Cl. 340-166.00R.
Tanaka, Hiroshi; and Yamamoto, Yoshihiro, to NGK Spark Plug Co., Ltd. Method for producing titanium nitride-base sintered alloys. 4,065,301, Cl. 75-203.000.
Tanaka, Yutaka; Kondo, Yutaka; and Yamanaka, Akira, to Toyota Jidosha Kogyo Kabushiki Kaisha. Seat belt system. 4,065,156, Cl. 280-747.000.
Tang, Sunny C.: *See—*
Kim, Leo; Paxson, Timm E.; and Tang, Sunny C., 4,065,505, Cl. 260-600.00R.
Tanimura, Kaoru: *See—*
Nakagawa, Kazuyuki; Murakami, Nanami; Mori, Hideo; and Tanimura, Kaoru, 4,065,456, Cl. 260-289.00R.
Tanji, Akinori: *See—*
Akiyama, Takashi; Tanji, Akinori; Ikeda, Hideo; and Asano, Seiichi, 4,064,605, Cl. 28-103.000.
Tanner, Herbert: *See—*
Schreyer, Gerd; Tanner, Herbert; Weigert, Wolfgang; and Gora, Ullrich, 4,065,510, Cl. 260-632.00B.
Tashiro, Hirohisa: *See—*
Tsuneki, Takao; Takahashi, Norio; and Tashiro, Hirohisa, 4,065,387, Cl. 210-62.000.
Tatyanchikov, Valentin Alexeevich: *See—*
Evkin, Ivan Frolovich; Petrov, Vladimir Alexandrovich; Olevsky, Viktor Markovich; Ruchinsky, Vitaly Rafael-Abovich; Bushev, Vladimir Semenovich; and Tatyanchikov, Valentin Alexeevich, 4,065,346, Cl. 159-6.00R.
Tausch, Gerald, to Miller-Holzwarth, Inc. Ballistic protected periscope construction. 4,065,206, Cl. 350-301.000.
Tayco Development, Inc.: *See—*
Taylor, Douglas P., 4,064,977, Cl. 188-317.000.
Taylor, Douglas P., to Tayco Development, Inc. Fluid amplified shock absorber having DeLaval nozzle. 4,064,977, Cl. 188-317.000.
Taylor, Harold Mellon, to Eli Lilly and Company. Herbicidal β-phenyl-4-piperidinones. 4,065,290, Cl. 71-94.000.
Taylor, Lynn J.: *See—*
Lenard, William; and Taylor, Lynn J., 4,065,589, Cl. 428-35.000.
Taylor, Thomas D.: *See—*
Frantz, Virgil L.; and Taylor, Thomas D., 4,065,096, Cl. 251-137.000.
Teibow Company Limited: *See—*
Otsuka, Katsumi, 4,065,215, Cl. 401-199.000.
Telatemp Corporation: *See—*
Darringer, Richard E.; and Wrighton, Robert J., 4,064,827, Cl. 116-114.00Y.
Teledyne Electro Mechanisms: *See—*
Morris, Gilbert; and Heinrich, Richard P., 4,064,622, Cl. 29-625.000.
Teledyne Industries, Inc.: *See—*
Roberts, Gregory Todhunter; Owens, David Vincent; and Goodspeed, Raymond Frank, 4,065,299, Cl. 75-67.00A.
Trenary, John, 4,064,896, Cl. 137-218.000.
Telefonaktiebolaget L M Ericsson: *See—*
Lundkvist, Bror Ludvig; Lindeberg, Sven-Erik; and Forsberg, Karl Sievert, 4,065,652, Cl. 200-175.000.
Teletype Corporation: *See—*
Babler, Egon S., 4,064,799, Cl. 101-93.020.
Berry, James M., 4,065,773, Cl. 346-75.000.
Heeren, Richard H., 4,065,679, Cl. 307-251.000.
Tennes, Bernard R.; and Burton, Clyde L., to United States of America, Agriculture. Continuous mechanized harvesting of horticultural crops. 4,064,683, Cl. 56-328.0TS.
Teti, John J., to Pyott-Boone Machinery, Corporation. Portable water scoop. 4,065,011, Cl. 214-146.00E.
Teti, Joseph A., Jr.; and Peroni, Peter A., to LaFrance Precision Casting Company. Tool box handle. 4,064,594, Cl. 16-125.000.
Texaco Development Corporation: *See—*
Gipson, Robert Malone, 4,065,476, Cl. 260-348.290.
Texaco Inc.: *See—*
Bartley, Burton H.; and Estes, John H., 4,065,514, Cl. 260-676.00R.
Lachowicz, Donald R.; and Holder, Charles B., 4,065,521, Cl. 260-879.000.
MacLean, John P.; and Strickland, John C., 4,064,756, Cl. 73-349.000.
Pittman, Robert W.; and Hermes, Chester E., 4,064,749, Cl. 73-152.000.
Pogonowski, Ivo C., 4,064,703, Cl. 61-53.680.
Texas Instruments Incorporated: *See—*
Adcock, Willis A.; and Skaggs, Frank L., 4,065,785, Cl. 358-44.000.
Kendall, Don Leslie; and Judy, Millard Monroe, 4,065,742, Cl. 338-9.000.
Theodore, Ares N.: *See—*
Labana, Santokh S.; and Theodore, Ares N., 4,065,518, Cl. 260-836.000.

Theurer, Josef, to Franz Plasser Bahnbaumaschinen Industriegesellschaft m.b.H. Mobile apparatus for non-stop track leveling and ballast tamping. 4,064,807, Cl. 104-7.00A.
Thiele, Gerhard: *See—*
Zollner, Christine; Thiele, Gerhard; Zollner, Dieter; and Koziol, Konrad, 4,065,377, Cl. 204-290.00F.
Thielen, Gunter: *See—*
Wild, Hans; Jeckel, Guenter; Echte, Adolf; Zizlsperger, Johann; Reffert, Rudi Wilhelm; and Thielen, Gunter, 4,065,532, Cl. 264-68.000.
Thomas & Betts Corporation: *See—*
Pobuta, Walter; and Dolgos, Charles, 4,064,918, Cl. 140-123.600.
Thomas, Harris B.: *See—*
Mahle, Howard C.; and Thomas, Harris B., 4,065,005, Cl. 214-41.00R.
Thomas, Wolfram: *See—*
Grundei, Hans; and Thomas, Wolfram, 4,064,568, Cl. 3-1.911.
Thompson, John R., to United States of America, Navy. Device for measuring the velocity of a body in an undersea environment. 4,065,746, Cl. 340-5.00S.
Thomson-CSF: *See—*
Mayeux, Christian; Micheron, Francois; and Vasseur, Jean Pierre, 4,065,671, Cl. 250-370.000.
Micheron, Francois; Doriath, Gerard; and Spitz, Eric, 4,065,677, Cl. 307-112.000.
Thornburg, Russell B., to Global Marine, Inc. Self-contained mooring system for a drill ship. 4,064,822, Cl. 114-230.000.
Thornton, William A., to Westinghouse Electric Corporation. High-pressure mercury-vapor discharge lamp having a light output with incandescent characteristics. 4,065,688, Cl. 313-25.000.
Thorpe, John Anton; and Porter, Harold Felton, to Du Pont de Nemours, E. I., and Company. Process for recovery of products from a waste stream in the manufacture of acrylonitrile. 4,065,486, Cl. 260-465.300.
Thorsheim, Ivar. Method and an apparatus for addressing and stacking individual pieces of printed matter for mailing, especially magazine copies, booklets and other bindery articles. 4,065,117, Cl. 270-58.000.
Threatt, Grace J. Combined baby bottle holder and mattress cover. 4,064,576, Cl. 5-334.00C.
Three Rivers Aluminum Company: *See—*
Randall, Robert P.; and Torbett, Richard L., 4,064,653, Cl. 49-458.000.
Throop, Lewis J.: *See—*
Li, Tsung-tee; Marx, Michael; and Throop, Lewis J., 4,065,452, Cl. 260-239.55D.
Thrower, William F.: *See—*
Lee, Don H.; Weller, Kenneth P.; Ying, Robert S.; and Thrower, William F., 4,064,620, Cl. 29-580.000.
Tibolla, Marcello: *See—*
Doria, Gianfederico; Giraldi, PierNicola; Lauria, Francesco; Corno, Maria Luisa; Sberze, Piero; and Tibolla, Marcello, 4,065,467, Cl. 260-345.200.
Tiedeman, George T.: *See—*
Oita, Katashi; San Clemente, Marion R.; Oh, John H.; and Tiedeman, George T., 4,065,576, Cl. 424-318.000.
Oita, Katashi; San Clemente, Marion R.; Oh, John H.; and Tiedeman, George T., 4,065,577, Cl. 424-333.000.
Tilley, James N.: *See—*
Andrews, Philip S.; Farrissey, William J., Jr.; Onder, Besir K.; and Tilley, James N., 4,065,441, Cl. 260-78.00R.
Tilly, Guy; Hardouin, Michel Jean Charles; and Lautrou, Jean, to Laboratoires Andre Guerbet. X-Ray contrast media. 4,065,553, Cl. 424-5.000.
Tilly, Guy; Hardouin, Michel Jean Charles; and Lautrou, Jean, to Laboratoires Andre Guerbet. X-ray contrast media. 4,065,554, Cl. 424-5.000.
Timerax Holdings Ltd.: *See—*
Phipps, Frank T., 4,064,571, Cl. 4-172.190.
Timin, Mitchell E., to Airco, Inc. Slot sealing valve for vacuum coating apparatus. 4,065,097, Cl. 251-228.000.
Ting, Vincent Wen-Hwa, to SCM Corporation. U.V. Curable poly(ether-urethane) polyacrylates and wet-look polymers prepared therefrom. 4,065,587, Cl. 427-54.000.
Tinholt, Thomas H., to Eaton Corporation. Dual speed viscous fluid coupling. 4,064,980, Cl. 192-58.00B.
Tipper, John M. Plow cutter assembly. 4,065,184, Cl. 299-34.000.
Todd & Sargent, Inc.: *See—*
Mahle, Howard C.; and Thomas, Harris B., 4,065,005, Cl. 214-41.00R.
Toeppen, Thurston H. Fastening device for print head. 4,064,984, Cl. 197-52.000.
Tokumaru, Yukuya: *See—*
Suzuki, Yasoji; Tokumaru, Yukuya; and Nakai, Masanori, 4,065,187, Cl. 307-279.000.
Tokura, Masayuki: *See—*
Kawaguchi, Yoshihiko; Harada, Yoshimi; Miki, Makoto; Gouda, Kanenari; Akiyama, Masaharu; Tokura, Masayuki; and Kuroha, Jun, 4,065,419, Cl. 260-28.50D.
Tokyo Shibaura Electric Co., Ltd.: *See—*
Iwai, Naoji; Uchida, Takashi; and Abe, Takemi, 4,065,625, Cl. 428-596.000.
Iwano, Yoshihiko; and Une, Katsumi, 4,065,352, Cl. 176-68.000.
Maeyama, Shigeo, 4,065,690, Cl. 313-57.000.
Matsumoto, Mitsuo, 4,065,809, Cl. 364-200.000.
Ogawa, Kazuyuki; Hirose, Masahiko; Shibagaki, Masahiro; Murakami, Yoshio; and Horiike, Yasuhiro, 4,065,369, Cl. 204-164.000.
Suzuki, Seigo; and Eguchi, Seiji, 4,065,639, Cl. 178-69.100.
Suzuki, Yasoji; Tokumaru, Yukuya; and Nakai, Masanori, 4,065,187, Cl. 307-279.000.
Takeno, Shouzo; Mashita, Masao; and Onodera, Toshihiro, 4,065,734, Cl. 333-30.00R.
Tolnai, Julius L., to Price Pfister Brass Mfg. Co. Washerless cartridge valve for faucets. 4,064,904, Cl. 137-454.500.
Toplan Manufacturing Inc.: *See—*
Otsuka, Katsumi, 4,065,215, Cl. 401-199.000.
Topolyansky, Jury Arnoldovich: *See—*
Alexandrov, Adolf Moritsovich; Aglitsky, Vladimir Efimovich; Tsimbler, Jury Abramovich; Lurie, Mikhail Vladimirovich; Topolyansky, Jury Arnoldovich; Kantor, Ilya Solomonovich; Chizhikov, Anatoly Petrovich; and Gun, Dmitry Rudolfovich, 4,065,076, Cl. 243-38.000.
Toray Industries, Inc.: *See—*
Hosoi, Kazuo; Kawabe, Norio; and Ohno, Masaji, 4,065,475, Cl. 260-348.310.
Kinoshita, Yoshiro, 4,065,549, Cl. 423-447.400.
Nishiumi, Shiro; Hasegawa, Shoichi; Mizoguchi, Toshiyuki; and Furuta, Sachiko, 4,065,599, Cl. 428-402.000.
Takahashi, Kooji; Kojima, Tatsuji; Ishikawa, Teruo; Nakamura, Kimio; and Ikenaga, Shizuyoshi, 4,065,598, Cl. 428-394.000.
Torbett, Richard L.: *See—*
Randall, Robert P.; and Torbett, Richard L., 4,064,653, Cl. 49-458.000.
Torigoe, Masao; Mori, Kunihito; Tsuchiya, Mitsuru; and Takemura, Seiji, to Matsushita Electric Industrial Co., Ltd. Electric blower assembly having volute passages to direct air into motor housing. 4,065,233, Cl. 417-368.000.
Torquato, Michael. Rotary engine. 4,064,697, Cl. 60-624.000.
Towmotor Corporation: *See—*
Leskovec, Edward V.; and Porter, Ralph D., 4,065,112, Cl. 267-34.000.
Soulsby, John E.; and Malecha, Richard J., 4,064,903, Cl. 137-375.000.
Toyo Boseki Kabushiki Kaisha: *See—*
Igeta, Kikuji; and Ohguchi, Masakatsu, 4,065,256, Cl. 8-115.500.
Toyo Soda Manufacturing Co., Ltd.: *See—*
Seita, Toru; and Shimizu, Akihiko, 4,065,414, Cl. 260-17.00R.
Toyobo Co., Ltd.: *See—*
Akiyama, Takashi; Tanji, Akinori; Ikeda, Hideo; and Asano, Seiichi, 4,064,605, Cl. 28-103.000.
Uno, Keiichi; and Miyagawa, Takahito, 4,065,439, Cl. 260-75.00R.
Toyota Jidosha Kogyo Kabushiki Kaisha: *See—*
Kato, Takashi, 4,064,860, Cl. 123-191.00S.
Shibata, Norio, 4,064,693, Cl. 60-290.000.
Tanaka, Yutaka; Kondo, Yutaka; and Yamanaka, Akira, 4,065,156, Cl. 280-747.000.
Tracor, Inc.: *See—*
Anthony, Albert M., 4,065,737, Cl. 335-212.000.
Travers, William S.: *See—*
Vercellone, Mario J.; and Travers, William S., 4,064,646, Cl. 43-42.410.
Treadwell, John William. Adding machine tape reversing rewinder. 4,065,068, Cl. 242-67.10R.
Trenary, John, to Teledyne Industries, Inc. Vacuum breakers. 4,064,896, Cl. 137-218.000.
Treslo, Angelo. Lock bar assembly. 4,064,714, Cl. 70-18.000.
Triplex Safety Glass Company Limited: *See—*
King, Robert David; Hiscutt, Robert; and Molineux, Peter, 4,065,600, Cl. 428-432.000.
Triumph Werke Nurnberg A.G.: *See—*
Anton, Rainer; Beyer, Ernst; and Bielefeld, Bodo, 4,064,982, Cl. 197-1.00R.
TRW Inc.: *See—*
Dunn, William M., 4,064,606, Cl. 29-25.420.
Hill, David A.; Pearson, Durk J.; Motley, Ethelyn P.; Beard, Thomas N.; and Farrell, James L., 4,065,183, Cl. 299-4.000.
Wahlers, Richard L.; and Merz, Kenneth M., 4,065,743, Cl. 338-308.000.
Tseo, Gudin, to Rohr Industries, Incorporated. Slanted cavity resonator. 4,064,961, Cl. 181-213.000.
Tsimbler, Jury Abramovich: *See—*
Alexandrov, Adolf Moritsovich; Aglitsky, Vladimir Efimovich; Tsimbler, Jury Abramovich; Lurie, Mikhail Vladimirovich; Topolyansky, Jury Arnoldovich; Kantor, Ilya Solomonovich; Chizhikov, Anatoly Petrovich; and Gun, Dmitry Rudolfovich, 4,065,076, Cl. 243-38.000.
Tsuchiya, Mitsuru: *See—*
Torigoe, Masao; Mori, Kunihito; Tsuchiya, Mitsuru; and Takemura, Seiji, 4,065,233, Cl. 417-368.000.
Tsuchiya, Tsutomu: *See—*
Umezawa, Hamao; Umezawa, Sumio; Tsuchiya, Tsutomu; and Watanabe, Isamu, 4,065,616, Cl. 536-17.000.
Tsuji, Nobuo: *See—*
Sakaguchi, Shinji; Imai, Shinichi; Yamaguchi, Junn; and Tsuji, Nobuo, 4,065,435, Cl. 260-47.0UP.
Tsuneki, Takao; Takahashi, Norio; and Tashiro, Hirohisa, to Kurita Water Industries, Ltd. Slime control method. 4,065,387, Cl. 210-62.000.
Tunison, Donald E., Jr., to P.>G Industries, Inc. Preparation of alkali-metal azides. 4,065,548, Cl. 423-410.000.

Turillon, Pierre Paul, to International Nickel Company, Inc., The. Powdered metal consolidation method. 4,065,302, Cl. 75-208.00R.
Turk, Chester F.: *See—*
Krapcho, John; and Turk, Chester F., 4,065,617, Cl. 542-450.000.
Turmer, Max: *See—*
Fastner, Thorwald; Niedermayr, Alois; Nakesch, Johann; and Turmer, Max, 4,064,925, Cl. 164-66.000.
Turpin, Lola, legal representative: *See—*
Ralston, John Pershing; Turpin, Warren Huntsman, deceased; and Turpin, Lola, legal representative, 4,064,992, Cl. 211-75.000.
Turpin, Warren Huntsman, deceased: *See—*
Ralston, John Pershing; Turpin, Warren Huntsman, deceased; and Turpin, Lola, legal representative, 4,064,992, Cl. 211-75.000.
Tuthill Pump Company: *See—*
Furlong, Donn Breen; and Londahl, Dickey Steele, 4,065,235, Cl. 417-420.000.
Uba, Toshio: *See—*
Hug, Leonard F.; McClelland, Donald H.; and Uba, Toshio, 4,064,725, Cl. 72-147.000.
Uchida, Takanori: *See—*
Yamawaki, Takeshi; Uchida, Takanori; and Nakajima, Makoto, 4,065,426, Cl. 260-33.6AQ.
Uchida, Takashi: *See—*
Iwai, Naoji; Uchida, Takashi; and Abe, Takemi, 4,065,625, Cl. 428-596.000.
Uchiyama, Yasuji, to Nippon Gakki Seizo Kabushiki Kaisha. Frequency-deviation method and apparatus. 4,064,778, Cl. 84-1.250.
Ulivi, Moreno, to Saint-Gobain Industries. Apparatus for centering sheets of glass on the platform of a machine. 4,064,659, Cl. 51-277.000.
Ulland, Hartmut; Zimmermann, Volker; and Zuehlke, Rainer, to International Business Machines Corporation. Method and apparatus for determining stepping motor parameters from induced voltages. 4,065,708, Cl. 318-685.000.
Ullman, Edwin F.; and Rubenstein, Kenneth E., to Syva Company. Lysozyme conjugates for enzyme immunoassays. 4,065,354, Cl. 195-63.000.
Ulrich, Hans: *See—*
Laridon, Urbain Leopold; Delzenne, Gerard Albert; Mader, Helmut; Ulrich, Hans; and Seidel, Bernhard, 4,065,524, Cl. 260-895.000.
Ulrich, John, to Nu-Dell Plastics Corporation. Picture frame support. 4,065,091, Cl. 248-473.000.
Umene, Osamu: *See—*
Sakamoto, Yoshimasa; Iwanari, Sadayoshi; and Umene, Osamu, 4,065,741, Cl. 337-407.000.
Umezawa, Hamao; and Kondo, Shinichi, to Zaidan Hojin Biseibutsu Kagaku Kenkyu Kai. δ-Substituted negamycin derivatives and syntheses. 4,065,495, Cl. 260-534.00M.
Umezawa, Hamao; Umezawa, Sumio; Tsuchiya, Tsutomu; and Watanabe, Isamu, to Zaidan Hojin Biseibutsu Kagaku Kenkyu Kai. Processes for production of a 1-N-(α-hydroxy-Φ-amino alkanoyl)-3-deoxy-5-O-pentafuranosyl neamine and new compounds produced by the same processes. 4,065,616, Cl. 536-17.000.
Umezawa, Sumio: *See—*
Umezawa, Hamao; Umezawa, Sumio; Tsuchiya, Tsutomu; and Watanabe, Isamu, 4,065,616, Cl. 536-17.000.
Une, Katsumi: *See—*
Iwano, Yoshihiko; and Une, Katsumi, 4,065,352, Cl. 176-68.000.
Union Carbide Corporation: *See—*
Bailey, Frederick Eugene; von Dohlen, Werner Claus; Matzner, Markus; Young, Robert Hayward; and Robeson, Lloyd Mahlon, 4,065,520, Cl. 260-878.00B.
France, Haywood Gordon, 4,065,258, Cl. 8-142.000.
Grant, Andrew Campbell, 4,064,914, Cl. 138-142.000.
Hamer, Anthony David; and Karol, Frederick John, 4,065,612, Cl. 526-130.000.
Hamling, Bernard H.; and Naumann, Alfred W., 4,065,544, Cl. 423-252.000.
Salensky, George Anthony, 4,065,590, Cl. 428-35.
Walitalo, Charles R.; and Ericson, Alvin E., 4,064,776, Cl. 83-171.000.
Union Oil Company of California: *See—*
Dobashi, Harry H., 4,065,484, Cl. 260-449.60M.
Uniroyal: *See—*
Mirtain, Henri J., 4,065,338, Cl. 156-123.00R.
Uniroyal, Inc.: *See—*
Delaney, Edward A.; Pinkowski, Norman J.; and Nudenberg, Walter, 4,065,444, Cl. 260-880.00R.
Farber, Milton; Loveless, Frederick C.; and Peterson, Robert F., Jr., 4,064,922, Cl. 152-347.000.
Hen, John, 4,065,423, Cl. 260-29.70H.
Unisette Realty Ltd.: *See—*
Spinner, David, 4,064,679, Cl. 56-2.000.
United Kingdom of Great Britain and Northern Ireland, The Secretary of State for Defence in Her Britannic Majesty's Government of the: *See—*
Berry, Thomas Royston, 4,065,770, Cl. 343-5.0SC.
Gray, Kenneth Walter; and Rees, Huw David, 4,065,782, Cl. 357-23.000.
United States of America
Agriculture: *See—*
Roth, William B., 4,065,287, Cl. 71-13.000.
Tennes, Bernard R.; and Burton, Clyde L., 4,064,683, Cl. 56-328.0TS.
Army: *See—*
Apstein, Maurice; and Kalmus, Henry P., 4,064,806, Cl. 102-70.20R.
Ebner, Walter B.; and Walk, Charles Richard, 4,065,550, Cl. 423-464.000.
Lavertu, Roger R.; and Godbout, Antonin, 4,065,529, Cl. 264-3.00E.
Noble, Lowell; and Gaspar, James T., 4,065,370, Cl. 204-192.00N.
Vig, John R., 4,065,211, Cl. 356-152.000.
Zavitsanos, Peter D.; Golden, Joseph A.; and Alyea, Frederick N., 4,065,207, Cl. 350-312.000.
Energy: *See—*
Sheffield, George V., 4,065,350, Cl. 176-3.000.
Energy Research and Development Administration: *See—*
Andersen, John A.; and Harty, Gene R., 4,065,217, Cl. 403-24.000.
Bjorklund, William J., 4,065,400, Cl. 252-301.10W.
Jassby, Daniel L.; and Kulsrud, Russell M., 4,065,351, Cl. 176-5.000.
Roche, Michael F.; Faist, Suzan M.; Eberhart, James G.; and Ross, Laurids E., 4,065,602, Cl. 429-72.000.
Health, Education and Welfare: *See—*
Swett, Alan M.; and Swift, Roderick D., 4,065,066, Cl. 242-47.120.
National Aeronautics and Space Administration; administrator; with respect to an invention of:
Knoell, Albert C.; and Maxwell, Hugh G. Method of adhering bone to a rigid substrate using a graphite fiber reinforced bone cement. 4,064,566, Cl. 3-1.900.
National Aeronautics and Space Administration: *See—*
Dickerson, George E., 4,065,340, Cl. 156-154.000.
Johnson, James Edward; Foster, Tom; and Allan, Roy Duncan, 4,064,692, Cl. 60-261.000.
Kurtz, Robert L., 4,065,202, Cl. 350-3.500.
Progar, Donald J.; Bell, Vernon L.; and St. Clair, Terry L., 4,065,345, Cl. 156-309.000.
Vykukal, Hubert C.; Chambers, Alan B.; and St. John, Roy H., 4,064,642, Cl. 36-92.000.
Navy: *See—*
Ditter, Jerome F.; and Klusmann, Eugene B., 4,065,509, Cl. 260-606.50B.
Ess, John O., 4,064,783, Cl. 85-33.000.
Gulick, Joseph F.; and Marlow, Donald R., 4,065,771, Cl. 343-100.0SA.
Senger, Stephen J., 4,065,726, Cl. 330-288.000.
Thompson, John R., 4,065,746, Cl. 340-5.00S.
Wagner, Peter B., 4,065,765, Cl. 340-347.0DD.
U.S. Philips Corporation: *See—*
Elders, Marius J. A.; Vink, Nicolaas G.; and van Steen, Cornelis, 4,065,738, Cl. 335-213.000.
Gijrath, Johannes Henricus Nicolaas, 4,065,693, Cl. 313-406.000.
Lakerveld, Herman Gerard; and Rietdijk, Johan Adriaan, 4,065,674, Cl. 250-406.000.
Palfreeman, John S.; Redwood, Martin; Smith, Frederick W.; and Mitchell, Richard F., 4,065,735, Cl. 333-72.000.
Schomberg, Hermann; and Heubach, Frank, 4,065,808, Cl. 364-200.000.
van der Waal, Jan, 4,065,695, Cl. 313-466.000.
United States Steel Corporation: *See—*
Pringle, William L., 4,065,153, Cl. 280-704.000.
United Technologies Corporation: *See—*
Mercik, Henry J., Jr.; and Armstrong, Lee R., 4,064,746, Cl. 73-116.000.
Rackliffe, Richard J.; Goodfriend, Harvey J.; and Armstrong, Lee R., 4,064,747, Cl. 73-116.000.
United Turbine AB & Co.: *See—*
Kronogard, Sven-Olof, 4,064,690, Cl. 60-39.16R.
Universal Maschinenfabrik Dr. Rudolf Schieber KG: *See—*
Krause, Erich, 4,064,710, Cl. 66-157.000.
Krause, Erich; and Schieber, Hans, 4,064,711, Cl. 66-157.000.
University of Illinois Foundation: *See—*
Pandey, Ramesh C.; and Rinehart, Kenneth L., Jr., 4,065,384, Cl. 210-31.00C.
University of Virginia, The: *See—*
Stoner, Glenn E.; and Zardiackas, Lyle D., 4,064,629, Cl. 32-15.000.
Uno, Keiichi; and Miyagawa, Takahito, to Toyobo Co., Ltd. Copolyester and process for the production thereof. 4,065,439, Cl. 260-75.00R.
Unterweger, Heinz; and Gremaud, Maurice, to Sprecher & Schuh AG. Circuit arrangement in an electrical device operated with direct-current, especially in a timing relay. 4,065,805, Cl. 361-196.000.
UOP Inc.: *See—*
Hervert, George L., 4,064,829, Cl. 118-49.100.
Pulak, Richard P., 4,065,269, Cl. 23-288.00B.
Upjohn Company, The: *See—*
Andrews, Philip S.; Farrissey, William J., Jr.; Onder, Besir K.; and Tilley, James N., 4,065,441, Cl. 260-78.00R.
Axen, Udo F., 4,065,633, Cl. 560-121.000.
Lednicer, Daniel, 4,065,573, Cl. 424-278.000.
Magerlein, Barney J., 4,065,628, Cl. 560-53.000.
Magerlein, Barney J., 4,065,629, Cl. 560-5.00B.
Magerlein, Barney J., 4,065,631, Cl. 560-55.000.
Moon, Malcolm W.; and Sharp, John C., 4,065,574, Cl. 424-283.000.
Smith, Charles G., 4,065,556, Cl. 424-181.000.
Urbantsok, Janos: *See—*
Koroknay, Laszlo; and Urbantsok, Janos, 4,065,148, Cl. 280-432.000.

Ustredni statni veterinarni ustav: *See—*
Mukarovsky, Ladislav; Novak, Artur; and Kretschmer, Felix, 4,064,838, Cl. 119-14.080.
V. Kann Rasmussen & Co.: *See—*
Rasmussen, Villum Benedikt Kann; and Kann-Rasmussen, Lars Erik, 4,064,649, Cl. 49-250.000.
Valin, Norman A. Protective orthopedic device. 4,064,874, Cl. 128-80.00C.
Vallor, Ben J.: *See—*
Geiger, Paul B.; Grunewald, Ernst; and Vallor, Ben J., 4,064,887, Cl. 134-144.000.
Van Dyk Research Corporation: *See—*
Pollack, Maxwell Aaron, 4,065,335, Cl. 156-69.000.
Van Auken, Richard L., to Exxon Research and Engineering Company. Ski and method of making same. 4,065,150, Cl. 280-610.000.
van der Schaar, Wouter Wies: *See—*
Defares, Peter Bernard; van der Schaar, Wouter Wies; and Verveen, Eduard Theodorus, 4,064,869, Cl. 128-2.00R.
van der Waal, Jan, to U.S. Philips Corporation. Cathode ray tube screen having charge-retaining layer apertured in registration with color elements. 4,065,695, Cl. 313-466.000.
Van Horbek, Judd. Apparatus for mixing liquids. 4,065,107, Cl. 366-343.000.
van Steen, Cornelis: *See—*
Elders, Marius J. A.; Vink, Nicolaas G.; and van Steen, Cornelis, 4,065,738, Cl. 335-213.000.
Van Zwet, Henry: *See—*
De Beukelaar, Jan W.; Van Zwet, Henry; and Roest, Jacob B., 4,065,610, Cl. 526-70.000.
Varian Associates, Inc.: *See—*
Hill, Howard D. W., 4,065,714, Cl. 324-.50A.
Varta Batterie Aktiengesellschaft: *See—*
Lindenberg, Hans-Georg; Illmann, Joachim; and Golz, Hans-Joachim, 4,065,116, Cl. 269-22.000.
Vasseur, Jean Pierre: *See—*
Mayeux, Christian; Micheron, Francois; and Vasseur, Jean Pierre, 4,065,671, Cl. 250-370.000.
VCA Corporation: *See—*
Kirk, Donald C., Jr., 4,065,036, Cl. 222-153.000.
Veba-Chemie AG: *See—*
Wessendorf, Richard; Sommer, August; and Birkelbach, Heinrich, 4,065,506, Cl. 260-601.00R.
Velsicol Chemical Corporation: *See—*
Anderson, Arnold L., 4,065,429, Cl. 260-45.95G.
Verbauwhede, Germain: *See—*
Buyssens, Noel; and Verbauwhede, Germain, 4,064,915, Cl. 139-425.00R.
Verborgt, Jozef, to Cabofina S. A. Process for production acid polyester resins and powder coating products prepared from said resins. 4,065,438, Cl. 260-75.00R.
Vercellone, Mario J.; and Travers, William S. Fishing lure. 4,064,646, Cl. 43-42.410.
Vereecke, Frank J.: *See—*
Hemsath, Klaus H.; and Vereecke, Frank J., 4,065,252, Cl. 432-77.000.
Vereinigte Aluminium-Werke AG: *See—*
Weckesser, Ernst; Sparwald, Volker; Reh, Lothar; Bohm, Eberhard; and Graf, Rolf, 4,065,271, Cl. 55-2.000.
Vereinigte Metallwerke Ranshofen-Berndorf Aktiengesellschaft: *See—*
Kaan, Peter; and Beke, Gunther Rudolf, 4,064,963, Cl. 181-244.000.
Vereinigte Osterreichische Eisen- und Stahlwerke-Alpine Montan Aktiengesellschaft: *See—*
Fastner, Thorwald; Niedermayr, Alois; Nakesch, Johann; and Turmer, Max, 4,064,925, Cl. 164-66.000.
Verkaufsgesellschaft fur Teererzeugnisse (VFT): *See—*
Gemmeke, Wilfried; Werner, Heinrich; Echterhoff, Heinz; and Raulf, Erich, 4,065,296, Cl. 75-48.000.
Vernaleken, Hugo: *See—*
Adelmann, Siegfried; Margotte, Dieter; Vernaleken, Hugo; and Nouvertne, Werner, 4,065,436, Cl. 260-47.0XA.
Verveen, Eduard Theodorus: *See—*
Defares, Peter Bernard; van der Schaar, Wouter Wies; and Verveen, Eduard Theodorus, 4,064,869, Cl. 128-2.00R.
Verveur, Jean: *See—*
Maguer, Pierre; and Verveur, Jean, 4,065,748, Cl. 340-9.000.
Victor United, Inc.: *See—*
Groner, Norman Arlo, 4,064,862, Cl. 124-23.00R.
Helmick, James C., 4,064,863, Cl. 124-41.00A.
Vierling, Donald E. Method and apparatus for oxidizing a fuel in an internal combustion engine. 4,064,840, Cl. 123-3.000.
Vig, John R., to United States of America, Army. Precision X-ray diffraction system incorporating a laser aligner. 4,065,211, Cl. 356-152.000.
Vijayendran, Bheema Rao: *See—*
Gluck, Julius; and Vijayendran, Bheema Rao, 4,064,833, Cl. 118-646.000.
Vik, Kjeld. Stationary supporting structure. 4,064,669, Cl. 52-299.000.
Vimba, Vladimir Ivanovich: *See—*
Grigorenko, Anatoly Sergeevich; Kravchenko, Vasily Savelievich; Moroz, Jury Antonovich; Kortusov, Leonid Ivanovich; and Vimba, Vladimir Ivanovich, 4,064,733, Cl. 72-453.030.
Vincent, Riggi: *See—*
Warner, Richard F.; Billand, William; and Vincent, Riggi, 4,064,644, Cl. 40-152.000.
Vink, Nicolaas G.: *See—*
Elders, Marius J. A.; Vink, Nicolaas G.; and van Steen, Cornelis, 4,065,738, Cl. 335-213.000.
Vockenhuber, Karl: *See—*
Freudenschuss, Otto, 4,065,209, Cl. 352-72.000.
Vogel, Roger F.: *See—*
Swift, Harold E.; and Vogel, Roger F., 4,065,380, Cl. 208-89.000.
Vogt, Christoph, to Single Buoy Moorings Inc. Apparatus for the marine transshipment of a liquid. 4,064,820, Cl. 114-74.00R.
von der Crone, Jost: *See—*
Frey, Christoph; and von der Crone, Jost, 4,065,462, Cl. 260-299.000.
von der Eltz, Hans-Ulrich, to Hoechst Aktiengesellschaft. Process for the continuous wet treatment of textiles in rope form. 4,064,583, Cl. 8-149.100.
von Dohlen, Werner Claus: *See—*
Bailey, Frederick Eugene; von Dohlen, Werner Claus; Matzner, Markus; Young, Robert Hayward; and Robeson, Lloyd Mahlon, 4,065,520, Cl. 260-878.00B.
von Konig, Anita: *See—*
Weyde, Edith; von Konig, Anita; and Liebe, Werner, 4,065,312, Cl. 96-50.00R.
Voorhees, Vanderveer: *See—*
Dickey, Charles R.; and Voorhees, Vanderveer, 4,065,396, Cl. 252-33.400.
Vuitel, Laurent: *See—*
L'Eplattenier, Francois; and Vuitel, Laurent, 4,065,481, Cl. 260-438.100.
Vyboischikov, Felix Petrovich: *See—*
Beizerov, Semen Moiseevich; Vyboischikov, Felix Petrovich; Bloshenko, Vladimir Viktorovich; and Syaskin, Jury Mikhailovich, 4,065,634, Cl. 13-10.000.
Vykukal, Hubert C.; Chambers, Alan B.; and St. John, Roy H., to United States of America, National Aeronautics and Space Administration. Walking boot assembly. 4,064,642, Cl. 36-92.000.
W. H. Kuester K.G.: *See—*
Polke, Hans-Joachim, 4,064,685, Cl. 57-55.000.
W. M. Cissell Manufacturing Company: *See—*
Bullock, Norman J., 4,065,253, Cl. 432-105.000.
W. R. Grace & Co.: *See—*
Faid, Robert W.; and Reinhart, William F., 4,064,672, Cl. 52-726.000.
W. Schlafhorst & Co.: *See—*
Rohner, Joachim, 4,065,073, Cl. 242-131.000.
Wacker-Chemitronic Gesellschaft fur Elektronik Grundstoffe mbH: *See—*
Koppl, Franz; Griesshammer, Rudolf; and Hamster, Helmut, 4,065,533, Cl. 264-81.000.
Lampert, Ingolf, 4,064,660, Cl. 51-283.00R.
Wada, Masao: *See—*
Kikuchi, Yosio; Miyabayashi, Noriyuki; and Wada, Masao, 4,065,275, Cl. 55-121.000.
Wagner, Otto: *See—*
Frommer, Werner; Gericke, Horst; Keup, Uwe; Puls, Walter; Schmidt, Delt; and Wagner, Otto, 4,065,557, Cl. 424-181.000.
Wagner, Peter B., to United States of America, Navy. Pulse-width demodulator and information storage device. 4,065,765, Cl. 340-347.0DD.
Wagner, Walter D.: *See—*
Gayle, Harold R.; and Wagner, Walter D., 4,064,889, Cl. 137-68.00R.
Wahi, Chander M., to E. F. Johnson Company. Connector. 4,065,201, Cl. 339-103.00R.
Wahlers, Richard L.; and Merz, Kenneth M., to TRW, Inc. Resistor material, resistor made therefrom and method of making the same. 4,065,743, Cl. 338-308.000.
Waldecker, Donald E. Tire caliper. 4,064,632, Cl. 33-143.00D.
Walitalo, Charles R.; and Ericson, Alvin E., to Union Carbide Corporation. Apparatus for making tear resistant separable end-connected bags. 4,064,776, Cl. 83-171.000.
Walk, Charles Richard: *See—*
Ebner, Walter B.; and Walk, Charles Richard, 4,065,550, Cl. 423-464.000.
Waller, James L.: *See—*
Braniff, Michael J.; and Waller, James L., 4,065,182, Cl. 297-452.000.
Walsh, Fraser M.: *See—*
Ajami, Alfred M.; Walsh, Fraser M.; and Crouse, Dennis N., 4,065,601, Cl. 429-50.000.
Walsh, Michael M., to Eaton Corporation. Hoist load brake. 4,065,100, Cl. 254-167.000.
Walter, John W. A.C. bridge intrusion alarm system. 4,065,762, Cl. 340-285.000.
Walter, Lothar: *See—*
Ernst, Horst Manfred; Olschewski, Armin; Schurger, Rainer; Walter, Lothar; Brandenstein, Manfred; Burkl, Erich; and Kiener, Heinz, 4,065,193, Cl. 308-233.000.
Walters, Ronald D., to Hygeia Corporation. Bedding draw sheet. 4,064,577, Cl. 5-334.00R.
Walther, William D., to Dayton-Walther Corporation. Dual flanged wide base tire carrying rim and wheel. 4,065,186, Cl. 301-12.00R.
Wang, Richard H. S.: *See—*
Pond, David M.; Wang, Richard H. S.; and Irick, Gether, Jr., 4,065,427, Cl. 260-45.8NT.
Wang, Shing Chung, to Xerox Corporation. Tandem laser assembly. 4,065,731, Cl. 331-94.50G.

Warnecke, Friedrich Wilhelm: *See—*
Schliefer, Heinrich; and Warnecke, Friedrich Wilhelm, 4,065,250, Cl. 432-24.000.
Warner, Donald E.; and Oyama, George C., to Audiotronics Corporation. Headset. 4,065,645, Cl. 179-156.00R.
Warner, Richard F.; Billand, William; and Vincent, Riggi, to Dash, Arthur; and Reidel, Jay, part interest to each. Frame construction and corner clip apparatus. 4,064,644, Cl. 40-152.000.
Warolin, Christian Jean Marie: *See—*
Joullie, Maurice; Maillard, Gabriel; Lakah, Lucien; and Warolin, Christian Jean Marie, 4,065,575, Cl. 424-283.000.
Watanabe, Hideomi: *See—*
Sugisaki, Tsutomu; and Watanabe, Hideomi, 4,065,798, Cl. 360-128.000.
Watanabe, Isamu: *See—*
Umezawa, Hamao; Umezawa, Sumio; Tsuchiya, Tsutomu; and Watanabe, Isamu, 4,065,616, Cl. 536-17.000.
Waters, Kenneth H.; and Rice, George W., to Continental Oil Company. Geophysical prospecting methods. 4,065,749, Cl. 340-15.5MC.
Wax, Richard G.: *See—*
Maiese, William M.; and Wax, Richard G., 4,065,356, Cl. 195-80.00R.
Webb, George: *See—*
Pratt, Richard D.; Proffitt, Paul F.; and Webb, George, 4,065,394, Cl. 252-8.100.
Webb, John; and Houghton, Alan, to Webbs Machine Design. Fruit peeling method. 4,065,582, Cl. 426-231.000.
Webb, Walter J., to Scott & Fetzer Company, The. Valve apparatus for expansible chamber. 4,065,237, Cl. 417-503.000.
Webber, John Alan, to Eli Lilly and Company. 3-(Substituted) vinyl cephalosporins. 4,065,620, Cl. 544-16.000.
Webbs Machine Design: *See—*
Webb, John; and Houghton, Alan, 4,065,582, Cl. 426-231.000.
Weber, Christian: *See—*
Schafer, Hermann; and Weber, Christian, 4,065,410, Cl. 260-2.5AM.
Weber, Hans-Bernd: *See—*
Pels-Leusden, Carl Otto; Stupperich, Robert; Weber, Hans-Bernd; and Reinders, Rudi, 4,064,639, Cl. 34-212.000.
Weber Marking Systems, Inc.: *See—*
Schick, Margery L.; and Anderson, Bror E., 4,065,595, Cl. 428-141.000.
Weber, Robert W., to Servco Company, a division of Smith International, Inc., The. Underreamer having cutter arm position indication. 4,064,951, Cl. 175-45.000.
Weber, Rudiger, to Dr. Ing. h.c.F. Porsche AG, Firma. Tire filler valve arrangement. 4,064,897, Cl. 137-224.000.
Weckesser, Ernst; Sparwald, Volker; Reh, Lothar; Bohm, Eberhard; and Graf, Rolf, to Metallgesellschaft Aktiengesellschaft; and Vereinigte Aluminium-Werke AG. Process of separating hydrogen fluoride from gases. 4,065,271, Cl. 55-2.000.
Weigert, Wolfgang: *See—*
Schreyer, Gerd; Tanner, Herbert; Weigert, Wolfgang; and Gora, Ullrich, 4,065,510, Cl. 260-632.00B.
Weinstein, Burton A.; and Lipe, Gordon C., to National Recreation Industries, Inc. Retractable ski binding. 4,065,151, Cl. 280-618.000.
Weisenberger, Gottfried, to Effbe-Werk Fritz Brumme & Co. KG. Fluid control valve. 4,064,910, Cl. 137-627.500.
Weist, Herman C., to Weist Industries Inc. Bag forming method and apparatus. 4,065,344, Cl. 156-250.000.
Weist Industries Inc.: *See—*
Weist, Herman C., 4,065,344, Cl. 156-250.000.
Weitzman, Stewart, to Pacemaker Corporation. Disposable dental tray for topical application of fluoride gel and other dental medications. 4,064,628, Cl. 32-14.00B.
Welks, John D.: *See—*
Rentmeester, Kenneth R.; Jurcenko, John A.; and Welks, John D., 4,065,023, Cl. 220-75.000.
Weller, Kenneth P.: *See—*
Lee, Don H.; Weller, Kenneth P.; Ying, Robert S.; and Thrower, William F., 4,064,620, Cl. 29-580.000.
Weman, Per Olaf, to Sigmatex, A.G. Emergency locking retractor. 4,065,069, Cl. 242-107.40A.
Werner, Heinrich: *See—*
Gemmeke, Wilfried; Werner, Heinrich; Echterhoff, Heinz; and Raulf, Erich, 4,065,296, Cl. 75-48.000.
Wertepny, Alexander W. Gauging instrument. 4,064,633, Cl. 33-147.00E.
Wescom, Inc.: *See—*
Jordan, Thomas W., 4,065,198, Cl. 339-17.00D.
Wessel, Wolf, to Robert Bosch GmbH. Servo controlled exhaust gas recycle system. 4,064,851, Cl. 123-119.00B.
Wessendorf, Richard; Sommer, August; and Birkelbach, Heinrich, to Veba-Chemie AG. Continuous process for refining glyoxal. 4,065,506, Cl. 260-601.00R.
West Electric Co., Ltd.: *See—*
Iwata, Hiroshi; and Ishikawa, Katsuji, 4,065,776, Cl. 354-23.00D.
Western Electric Company, Incorporated: *See—*
Baron, William James; and Capano, Patrick John, 4,065,316, Cl. 106-20.000.
Westinghouse Electric Corporation: *See—*
Bertovich, Matthew G., 4,064,986, Cl. 198-326.000.
Bogel, George F., 4,065,669, Cl. 250-229.000.
Gutknecht, Peter, 4,065,781, Cl. 357-23.000.
Kulkarni, Avinash D., 4,065,694, Cl. 313-222.000.
Loch, Emil P., 4,064,618, Cl. 29-451.000.
Martz, Lyle F., 4,064,699, Cl. 60-664.000.
Maxwell, Albert H., Jr., 4,065,793, Cl. 360-6.000.
Osterhout, Joseph C., 4,065,692, Cl. 313-325.000.
Shutterly, Harold B., 4,065,794, Cl. 360-10.000.
Shutterly, Harold B., 4,065,795, Cl. 360-35.000.
Stern, Louis P., 4,064,698, Cl. 60-664.000.
Thornton, William A., 4,065,688, Cl. 313-25.000.
Whyte, Ian A.; and Haley, Paul H., 4,065,763, Cl. 340-310.00R.
Westman, Erik: *See—*
Larsson, Hans Gunnar; and Westman, Erik, 4,064,723, Cl. 72-60.000.
Westvaco Corporation: *See—*
Zimmerman, William E., 4,065,348, Cl. 162-49.000.
Weyant, Romer G. Door and method of making same. 4,064,655, Cl. 49-501.000.
Weyde, Edith; von Konig, Anita; and Liebe, Werner, to AGFA-Gevaert, A.G. Process for the production of photographic vesicular images in photographic silver halide material. 4,065,312, Cl. 96-50.00R.
Weyerhaeuser Company: *See—*
Oita, Katashi; San Clemente, Marion R.; Oh, John H.; and Tiedeman, George T., 4,065,576, Cl. 424-318.000.
Oita, Katashi; San Clemente, Marion R.; Oh, John H.; and Tiedeman, George T., 4,065,577, Cl. 424-333.000.
Weyl, Helmut: *See—*
Hacker, Wolf-Dieter; Friese, Karl-Hermann; Steinke, Leo; and Weyl, Helmut, 4,065,372, Cl. 204-195.00S.
Whiting Corporation: *See—*
Caldwell, Harold B., 4,065,266, Cl. 23-259.200.
Whitted, Robert L.; and Simmons, James E. Intermittently bulked yarn. 4,064,686, Cl. 57-140.00J.
Whyte, Andrew; Gallup, William A.; Schenker, Barry A.; and Schulz, Robert A., to Diamond Shamrock Corporation. Electrolytic cell. 4,065,376, Cl. 204-263.000.
Whyte, Ian A.; and Haley, Paul H., to Westinghouse Electric Corporation. Distribution network power line communication system. 4,065,763, Cl. 340-310.00R.
Wicklund, Joseph B., Jr., to Opcon, Inc. Balanced low impedance differential input line preamplifier. 4,065,724, Cl. 330-252.000.
Wicks, Moye, III; Kubitschek, Hans E.; and King, William E., to Shell Oil Company. Level actuated apparatus for delivering chemicals. 4,064,572, Cl. 4-227.000.
Widen Tool & Stamping, Inc.: *See—*
Solden, LeRoy, 4,065,087, Cl. 248-201.000.
Widmann, Friedman: *See—*
Giers, Alfred; Holdinghausen, Paul; Schneider, Hatto; and Widmann, Friedman, 4,064,761, Cl. 73-462.000.
Wiener, Hans, to Pressmaster Ltd. Foldable stand. 4,065,084, Cl. 248-117.100.
Wiggins, Douglas G.; and Kushall, Edward L., to Xerox Corporation. Programmable development control system. 4,065,031, Cl. 222-56.000.
Wiker, Joseph J.: *See—*
Rueggeberg, Werner; and Wiker, Joseph J., 4,065,137, Cl. 277-34.000.
Wikner, Jan Christer, to Stal-Laval Turbin AB. Method and apparatus for balancing a rotor. 4,064,762, Cl. 73-487.000.
Wild, Hans; Jeckel, Guenter; Echte, Adolf; Zizlsperger, Johann; Reffert, Rudi Wilhelm; and Thielen, Gunter, to BASF Aktiengesellschaft. Process for the admixture of additives into plastics with simultaneous removal of volatile constituents. 4,065,532, Cl. 264-68.000.
Wildey, Allan J., to Eaton Yale Ltd. Vehicle drive and suspension system. 4,064,956, Cl. 180-24.050.
Williams, David R., to Plunkett, William O.; and Reavis, Robert E., part interest to each. Iris throttle adaptor. 4,064,857, Cl. 123-141.000.
Williams, Donald L.; and Baker, James T., to General Motors Corporation. Compliant grooved sealing ring for threadably secured assembly. 4,065,026, Cl. 220-304.000.
Willmore, Bruce Albert Edward, to Imperial Chemical Industries Limited. Polymerization process. 4,065,609, Cl. 526-61.000.
Wilson, James D., to Banner Metals Div. of Intercole Automation. Bulk mail container. 4,065,141, Cl. 280-33.99H.
Wilson, James R.; and Wise, Jerry P., to General Motors Corporation. Tape cassette player. 4,065,800, Cl. 360-137.000.
Winchell, Frank J., to General Motors Corporation. Cambering vehicle. 4,065,144, Cl. 280-771.000.
Winchurch, Christopher John, to Irvin Great Britain Limited. Parachute reefing device. 4,065,079, Cl. 244-152.000.
Windmoller & Holscher: *See—*
Achelpohl, Fritz; and Schmedding, Herbert, 4,065,049, Cl. 229-55.000.
WindoWik Co.: *See—*
Kinlaw, Joe C., 4,064,666, Cl. 52-171.000.
Winkowski, Daniel A.: *See—*
Lawlis, John L.; Rodgers, Bernard L.; and Winkowski, Daniel A., 4,065,333, Cl. 156-40.000.
Winther, Howard Allyn, to Liberty Vinyl Corporation. Waterbed mattress with inflatable margins. 4,064,579, Cl. 5-371.000.
Wise, Jerry P.: *See—*
Wilson, James R.; and Wise, Jerry P., 4,065,800, Cl. 360-137.000.
Wise, Raleigh W.: *See—*
Campbell, Robert H.; and Wise, Raleigh W., 4,065,443, Cl. 260-79.50B.

Wittich, Willibald, deceased: *See—*
Seilstorfer, Helmut; Wittich, Willibald, deceased; and Messerschmitt-Bolkow-Blohm GmbH, legal representative, 4,065,303, Cl. 75-226.000.
Wolbrink, David W.; Budyak, Robert J.; Sellinger, Du Wayne M.; and Kaepernick, William A., to Broan Manufacturing Co., Inc. Receptacle for trash compactors. 4,064,798, Cl. 100-229.00A.
Wolf, Robert, to J. M. Voith G.m.b.H. Compression roller for paper producing machinery. 4,064,607, Cl. 29-116.0AD.
Wolf, Stanley I.: *See—*
Mulchi, Charles L., 4,064,876, Cl. 128-146.600.
Wolski, Pearl M. Key case and watch combination. 4,064,722, Cl. 70-456.00B.
Wong, James Y.; Kashyap, Satish C.; and Dunn, John G., to Canadian Patents and Development Limited. Microwave leakage indicator strip. 4,065,655, Cl. 219-10.55D.
Wong, Robert; and Hill, Homer G., to Owens-Corning Fiberglas Corporation. Reversible shear thinning gel forming coating composition for glass fibers. 4,065,417, Cl. 260-17.4CL.
Wood, William, to Harrison & Sons (High Wycombe) Limited; and Green Shield Trading Stamp Company Limited. Sachet for the attachment of stamps, tokens and like devices to containers. 4,064,645, Cl. 40-159.000.
Woodbridge, Richard G., III. Analytical test strip apparatus. 4,065,263, Cl. 23-253.0TP.
Woodcock, Floyd Baylie: *See—*
Patten, Hudson Taylor; and Woodcock, Floyd Baylie, 4,065,747, Cl. 340-5.00R.
Worback, David L., to Massey-Ferguson Inc. Swing valve circuit. 4,065,010, Cl. 214-138.00D.
Workman, James Phillip: *See—*
Magers, Wallace Farnholm; Hudson, Larry Lee; and Workman, James Phillip, 4,065,038, Cl. 222-321.000.
Wray, Joseph A.: *See—*
Johnston, Herbert N.; Wray, Joseph A.; Robbins, Joe David; and Schrager, Morton, 4,065,304, Cl. 96-1.0LY.
Wright, David Allan, to Ferranti Limited. Spring loading systems. 4,065,113, Cl. 267-156.000.
Wright, Newton E. Safety enclosure for mining machines. 4,065,167, Cl. 296-28.00C.
Wrighton, Robert J.: *See—*
Darringer, Richard E.; and Wrighton, Robert J., 4,064,827, Cl. 116-114.00Y.
Wu, Chin Tao, to RCA Corporation. Multiply-divide unit. 4,065,666, Cl. 364-759.000.
Wunder, William G., to Ex-Cell-O Corporation. Die casting machine. 4,064,928, Cl. 164-264.000.
Wunderlich, Hermann: *See—*
Spielberger, Georg; Wunderlich, Hermann; Klag, Gunther; and Zlokarnik, Marko, 4,065,492, Cl. 260-508.000.
Wunderlich, Langley H., to General Motors Corporation. Arrangement and method of drum brake spring attachment. 4,064,978, Cl. 188-331.000.
Wuttke, Wolfgang: *See—*
Mayer, Karl Heinrich; Hoffmeister, Friedrich; and Wuttke, Wolfgang, 4,065,568, Cl. 424-273.00P.
Xerox Corporation: *See—*
Bergen, Richard F., 4,065,308, Cl. 96-1.50R.
Eddy, Clifford O.; and Hoffend, Thomas R., 4,065,586, Cl. 427-22.000.
Goffe, William L., 4,065,307, Cl. 96-1.50R.
Jelfo, Raymond L.; Strella, Stephen; and Hamilton, Willard C., 4,065,585, Cl. 427-11.000.
Johnston, Herbert N.; Wray, Joseph A.; Robbins, Joe David; and Schrager, Morton, 4,065,304, Cl. 96-1.0LY.
Jugle, Don B., 4,065,305, Cl. 96-1.0SD.
Wang, Shing Chung, 4,065,731, Cl. 331-94.50G.
Wiggins, Douglas G.; and Kushall, Edward L., 4,065,031, Cl. 222-56.000.
Xonics, Inc.: *See—*
Morsell, Arthur Lee, 4,065,670, Cl. 250-315.00A.
Yagi, Masahiro: *See—*
Ohata, Katsuya; Enomoto, Hiroshi; Yoshikuni, Yoshiaki; Kono, Tatsuhiko; and Yagi, Masahiro, 4,065,562, Cl. 424-267.000.
Yamada, Junji. Therapeutic cushion. 4,064,578, Cl. 5-355.000.
Yamada, Kenzo: *See—*
Masui, Akira; Yamada, Kenzo; Ninomiya, Akinori; Tachibana, Katsuhiko; and Kato, Yoshihiro, 4,065,298, Cl. 75-60.000.
Yamada, Kouichi: *See—*
Kubota, Katsuyuki; Fujii, Noboru; Yamada, Kouichi; Nakamura, Kimikazu; and Yuuki, Norihito, 4,064,616, Cl. 29-429.000.
Yamaguchi, Junn: *See—*
Sakaguchi, Shinji; Imai, Shinichi; Yamaguchi, Junn; and Tsuji, Nobuo, 4,065,435, Cl. 260-47.0UP.
Yamai, Fumito; Ishida, Tomohiko; and Ikeda, Yoshinori, to Sekisui Kaseihin Kogyo Kabushiki Kaisha. Process for the preparation of expandable styrene polymer particles. 4,065,411, Cl. 260-2.50B.
Yamamoto, Hisao: *See—*
Sasajima, Kikuo; Ono, Keiichi; Nakao, Masaru; Maruyama, Isamu; Katayama, Shigenari; Inaba, Shigeho; and Yamamoto, Hisao, 4,065,565, Cl. 424-250.000.
Yamamoto, Kimihiko: *See—*
Sawada, Toshio; Yamamoto, Kimihiko; and Ishikawa, Hitoshi, 4,064,817, Cl. 112-158.00F.
Yamamoto, Yoshihiro: *See—*
Tanaka, Hiroshi; and Yamamoto, Yoshihiro, 4,065,301, Cl. 75-203.000.
Yamanaka, Akira, to Mitsubishi Jidosha Kogyo Kabushiki Kaisha. Motor truck. 4,065,169, Cl. 296-35.00R.
Yamanaka, Akira: *See—*
Tanaka, Yutaka; Kondo, Yutaka; and Yamanaka, Akira, 4,065,156, Cl. 280-747.000.
Yamawaki, Takeshi; Uchida, Takanori; and Nakajima, Makoto, to Mitsubishi Chemical Industries, Ltd. Method for the preparation of powdered rubber. 4,065,426, Cl. 260-33.6AQ.
Yamazaki, Toshio; Cook, Harriet J.; and Lipson, Melvin A., to Dynachem Corporation. Phototropic dye system and photosensitive compositions containing the same. 4,065,315, Cl. 96-48.0QP.
Yasuda, Tetsuya; Iinuma, Yoshio; Maekawa, Yuzo; Kato, Toshikiyo; and Yoshida, Masaru, to Citizen Watch Co., Ltd. Electronic timepiece with electro-optical display. 4,064,689, Cl. 58-50.00R.
Yates, Gerald A.: *See—*
Pilarski, Regis V.; and Yates, Gerald A., 4,065,070, Cl. 242-107.40A.
Ying, Robert S.: *See—*
Lee, Don H.; Weller, Kenneth P.; Ying, Robert S.; and Thrower, William F., 4,064,620, Cl. 29-580.000.
Yokohama, Masao; and Sakai, Shoji, to Nissan Motor Co., Ltd.; and Ikeda Bussan Company, Limited. Automotive seat convertible to a bed. 4,065,174, Cl. 297-66.000.
Yoshida Kogyo K.K.: *See—*
Nagase, Mitsuo, 4,065,163, Cl. 292-341.150.
Okami, Eiryo, 4,065,540, Cl. 264-278.000.
Yoshida, Masaru: *See—*
Yasuda, Tetsuya; Iinuma, Yoshio; Maekawa, Yuzo; Kato, Toshikiyo; and Yoshida, Masaru, 4,064,689, Cl. 58-50.00R.
Yoshida, Mitsuhiro: *See—*
Kondoh, Teruo; Ban, Kazuhiro; Kawamoto, Akio; Masuno, Yoshiki; and Yoshida, Mitsuhiro, 4,065,768, Cl. 343-9.000.
Yoshida, Muneaki: *See—*
Maitani, Yoshihisa; Shimoyama, Kunio; Yoshida, Muneaki; Hashimoto, Akihiko; and Kitagawa, Masahiro, 4,065,777, Cl. 354-23.00R.
Yoshikuni, Yoshiaki: *See—*
Ohata, Katsuya; Enomoto, Hiroshi; Yoshikuni, Yoshiaki; Kono, Tatsuhiko; and Yagi, Masahiro, 4,065,562, Cl. 424-267.000.
Yoshiyuki, Honma; and Fumio, Yamazaki, to Nihon Kagaku Kizai Kabushiki Kaisha. Magnetically driven rotary pumps. 4,065,234, Cl. 417-420.000.
Youmans, Albert P.: *See—*
Kattner, Lionel E.; Youmans, Albert P.; and Shasby, Patrick J., 4,065,717, Cl. 324-158.00P.
Young Fire Equipment Corporation: *See—*
Young, Richard E.; and Ostolski, Timothy D., 4,065,761, Cl. 340-271.000.
Young, Richard E.; and Ostolski, Timothy D., to Young Fire Equipment Corporation. Electrical installation for fire engine tower or the like. 4,065,761, Cl. 340-271.000.
Young, Robert F.: *See—*
Hall, Charles B.; and Young, Robert F., 4,064,824, Cl. 115-41.0HT.
Young, Robert Hayward: *See—*
Bailey, Frederick Eugene; von Dohlen, Werner Claus; Matzner, Markus; Young, Robert Hayward; and Robeson, Lloyd Mahlon, 4,065,520, Cl. 260-878.00B.
Young, Simon. Adjustable building panel scaffold. 4,064,999, Cl. 214-1.0SW.
Youngstown Steel Door Company, The: *See—*
Jenkins, Oliver James; Ryan, Walter Samuel; and Suit, Leslie David, 4,064,810, Cl. 105-378.000.
Yount, Ronald E.; and Bell, Robert A., to McGraw-Edison Company. Food processing oven. 4,065,659, Cl. 219-398.000.
Yu, A. Tobey: *See—*
Cunningham, James Thomas; Snow, Frederick Orren, III; April, Joseph Richard; and Yu, A. Tobey, 4,065,002, Cl. 214-14.000.
Yuuki, Norihito: *See—*
Kubota, Katsuyuki; Fujii, Noboru; Yamada, Kouichi; Nakamura, Kimikazu; and Yuuki, Norihito, 4,064,616, Cl. 29-429.000.
Zaidan Hojin Biseibutsu Kagaku Kenkyu Kai: *See—*
Umezawa, Hamao; and Kondo, Shinichi, 4,065,495, Cl. 260-534.00M.
Umezawa, Hamao; Umezawa, Sumio; Tsuchiya, Tsutomu; and Watanabe, Isamu, 4,065,616, Cl. 536-17.000.
Zanfini, Vincent. Carpet cutter. 4,064,627, Cl. 30-287.000.
Zap-Lok Systems International, Inc.: *See—*
Echols, Marvin C.; and Gruller, David L., 4,064,619, Cl. 29-458.000.
Zardiackas, Lyle D.: *See—*
Stoner, Glenn E.; and Zardiackas, Lyle D., 4,064,629, Cl. 32-15.000.
Zauner, John H., to National Union Electric Corporation. Thermal cells. 4,065,605, Cl. 429-112.000.
Zavitsanos, Peter D.; Golden, Joseph A.; and Alyea, Frederick N., to United States of America, Army. Programmable power attenuator for continuous CO_2 lasers. 4,065,207, Cl. 350-312.000.
Zehner, Lee R., to Atlantic Richfield Company. Process for the preparation of oxalate esters from carbon monoxide and an enol ether. 4,065,490, Cl. 560-204.000.
Zeidler, Johannes, to Alfred Gutmann Gesellschaft fur Maschinenbau. Device for blasting large and bulky workpieces. 4,064,656, Cl. 51-426.000.

Zellhoefer, Glenn F., to National Union Electric Corporation. Thermal cells and electrolyte composition therefor. 4,065,604, Cl. 429-103.000.
Zellmer, Neale A., to GTE Automatic Electric Laboratories Incorporated. DC-to-DC voltage converter employing a common transistor in both switching and multivibrator functions. 4,065,807, Cl. 363-16.000.
Zenith Radio Corporation: *See—*
DeVries, Adrian J., 4,065,789, Cl. 358-167.000.
Zielinski, Erich, to Eastman Kodak Company. Web transporting apparatus. 4,065,042, Cl. 226-92.000.
Zimmerman, William E., to Westvaco Corporation. Method and apparatus for detecting and controlling the caustic in paper pulp bleaching. 4,065,348, Cl. 162-49.000.
Zimmermann, Volker: *See—*
Ulland, Hartmut; Zimmermann, Volker; and Zuehlke, Rainer, 4,065,708, Cl. 318-685.000.
Zimmerschied, Wilford J.: *See—*
Fields, Ellis K.; Zimmerschied, Wilford J.; and Palmer, David A., 4,065,442, Cl. 260-78.410.
Zin-Plas Corporation: *See—*
Nelson, Merritt J., 4,065,216, Cl. 403-4.000.
Zizlsperger, Johann: *See—*
Wild, Hans; Jeckel, Guenter; Echte, Adolf; Zizlsperger, Johann; Reffert, Rudi Wilhelm; and Thielen, Gunter, 4,065,532, Cl. 264-68.000.
Zlokarnik, Marko: *See—*
Spielberger, Georg; Wunderlich, Hermann; Klag, Gunther; and Zlokarnik, Marko, 4,065,492, Cl. 260-508.000.
Zollner, Christine; Thiele, Gerhard; Zöllner, Dieter; and Koziol, Konrad, to C. Conradty Nurnberg GmbH & Co. KG. Metal anode for electrochemical processes. 4,065,377, Cl. 204-290.00F.
Zollner, Dieter: *See—*
Zollner, Christine; Thiele, Gerhard; Zollner, Dieter; and Koziol, Konrad, 4,065,377, Cl. 204-290.00F.
Zuehlke, Rainer: *See—*
Ulland, Hartmut; Zimmermann, Volker; and Zuehlke, Rainer, 4,065,708, Cl. 318-685.000.
Zusser, Louis H., to Northridge Trading Company. Curling iron with stepped barrel. 4,065,657, Cl. 219-225.000.
Zytka, Bernard J. Substitute power supply and battery charger for battery operated apparatus. 4,065,710, Cl. 320-2.000.

LIST OF REISSUE PATENTEES

TO WHOM

PATENTS WERE ISSUED ON THE 27TH DAY OF DECEMBER, 1977

NOTE—Arranged in accordance with the first significant character or word of the name (in accordance with city and telephone directory practice).

Aizawa, Hiroshi; and Ogiso, Mitsutoshi, to Canon Kabushiki Kaisha. Electric control device for a camera. Re. 29,505, Cl. 354-235.000.
Canon Kabushiki Kaisha: *See—*
Aizawa, Hiroshi; and Ogiso, Mitsutoshi, Re. 29,505, Cl. 354-235.000.
Carding Specialists (Canada) Limited: *See—*
Varga, John Maximilian Jules, Re. 29,503, Cl. 417-492.000.
Combe Incorporated: *See—*
Lapidus, Herbert, Re. 29,501, Cl. 36-44.000.
Dawans, Francois; and Teyssie, Philippe, to Institut Francais du Petrole, des Carburants et Lubrifiants. Unsaturated hydrocarbons polymerization catalysts containing transition metal complexes and Bronsted acids. Re. 29,504, Cl. 526-135.000.
Institut Francais du Petrole, des Carburants et Lubrifiants: *See—*
Dawans, Francois; and Teyssie, Philippe, Re. 29,504, Cl. 526-135.000.
Jaronko, John C.; and Jaronko, John T., to Nutmeg Sanitation, Inc. Furnace apparatus. Re. 29,502, Cl. 110-14.000.
Jaronko, John T.: *See—*
Jaronko, John C.; and Jaronko, John T., Re. 29,502, Cl. 110-14.000.
Lapidus, Herbert, to Combe Incorporated. Deodorizer sheet material and insole. Re. 29,501, Cl. 36-44.000.
Nutmeg Sanitation, Inc.: *See—*
Jaronko, John C.; and Jaronko, John T., Re. 29,502, Cl. 110-14.000.
Ogiso, Mitsutoshi: *See—*
Aizawa, Hiroshi; and Ogiso, Mitsutoshi, Re. 29,505, Cl. 354-235.000.
Teyssie, Philippe: *See—*
Dawans, Francois; and Teyssie, Philippe, Re. 29,504, Cl. 526-135.000.
Varga, John Maximilian Jules, to Carding Specialists (Canada) Limited. Apparatus for use as a gas compressor or blower. Re. 29,503, Cl. 417-492.000.

LIST OF PLANT PATENTEES

Beyer, Frederick, to Stark Brothers Nurseries & Orchards Company. Peach tree-mutation of Loring variety. 4,170, 12-27-77, Cl. 43.000.
Carlton Rose Nurseries, Inc.: *See—*
McDaniel, Gayle Kent, 4,172, Cl. 20.000.
Conard-Pyle Company, The: *See—*
Jelly, Robert G., 4,173, Cl. 22.000.
Crisafulli, Guiseppe, Sr., deceased: *See—*
Crisafulli, Joseph, Jr., executor; and Crisafulli, Guiseppe, Sr., deceased, 4,169, Cl. 36.000.
Crisafulli, Joseph, Jr., executor; and Crisafulli, Guiseppe, Sr., deceased. Pear Tree. 4,169, 12-27-77, Cl. 36.000.
Diebold, David A., to Stark Brothers Nurseries & Orchards Company. Peach tree-mutation of Rio Oso Gem variety. 4,171, 12-27-77, Cl. 43.000.
Jelly, Robert G., to Conard-Pyle Company, The. Rose plant-charisma variety. 4,173, 12-27-77, Cl. 22.000.
McDaniel, Gayle Kent, to Carlton Rose Nurseries, Inc. Rose plant—volare variety. 4,172, 12-27-77, Cl. 20.000.
Stark Brothers Nurseries & Orchards Company: *See—*
Beyer, Frederick, 4,170, Cl. 43.000.
Diebold, David A., 4,171, Cl. 43.000.

LIST OF DESIGN PATENTEES

Abe, Isamu; and Sugioka, Takami, to Teijin Limited; and Teijin Seiki Co., Ltd. Winder for synthetic filament yarns. 246,785, 12-27-77, Cl. D15-66.000.
Alden, John S. Combination celestial display and restaurant building. 246,801, 12-27-77, Cl. D25-7.000.
American Optical Corporation: *See—*
Loughner, Larry G., 246,792, Cl. D16-65.000.
Amerock Corporation: *See—*
Clayton, LaVerne E., 246,759, Cl. D8-306.000.
Bladis, Robert F. Tray rack. 246,773, 12-27-77, Cl. D12-22.000.
Bode, Kurt; and Kramer, Jochen, to Rollei-Werke Franke & Heidecke. Motion picture camera. 246,786, 12-27-77, Cl. D16-4.000.
Bode, Kurt; and Kramer, Jochen, to Rollei-Werke Franke & Heidecke. Motion picture camera. 246,787, 12-27-77, Cl. D16-04.000.
Bonifant, Bern M., to Flex-a-lite Corporation. Fan for internal combustion engines. 246,794, 12-27-77, Cl. D23-165.000.
Bonifant, Bern M., to Flex-a-lite Corporation. Fan blade. 246,795, 12-27-77, Cl. D23-165.000.
Brandt, Larry A.; and Johnson, Bruce R. Parts cleaning brush. 246,747, 12-27-77, Cl. D4-02.000.
Brubaker, Curtis, to Filmation Associates. Vehicle. 246,772, 12-27-77, Cl. D12-1.000.
Brubaker, Curtis, to Filmation Associates. Vehicle. 246,775, 12-27-77, Cl. D12-90.000.
Brunswick Corporation: *See—*
Gruenhut, Joseph H., 246,805, Cl. D34-5.0BB.
Chou, Cheng-Chien: *See—*
Laymon, Stephen A.; and Chou, Cheng-Chien, 246,796, Cl. D23-165.000.
Clayton, LaVerne E., to Amerock Corporation. Bail pull. 246,759, 12-27-77, Cl. D8-306.000.
Cognata, Larry M., to Murray Ohio Manufacturing Co., The. Bicycle tank. 246,778, 12-27-77, Cl. D12-126.000.
Cognata, Larry M., to Murray Ohio Manufacturing Co., The. Bicycle tank. 246,779, 12-27-77, Cl. D12-126.000.
Cole, David C.: *See—*
Kelley, Craig B.; and Cole, David C., 246,761, Cl. D8-347.000.
Daniels, Genniel. Flower pot. 246,771, 12-27-77, Cl. D11-143.000.
DiMarchi, Silvio J.: *See—*
Goldman, Marvin A.; Goldman, Jerome N.; DiMarchi, Silvio J.; and Mesquida, Barbara A., 246,793, Cl. D23-4.000.
Dimiceli, Joseph W.; and Labra, Edgardo R. Utility pole adjustable insulator bracket. 246,762, 12-27-77, Cl. D8-364.000.
Ditto, Donald R. Plaque. 246,770, 12-27-77, Cl. D11-139.000.
Dyer, Margaret L. Robe and hood ensemble. 246,746, 12-27-77, Cl. D2-181.000.
Emhart Industries, Inc.: *See—*
Kelley, Craig B.; and Cole, David C., 246,761, Cl. D8-347.000.
Esposito, Patsy. Hand truck. 246,774, 12-27-77, Cl. D12-34.000.
Everest, Charles E., to Telatemp Corporation. Infrared thermometer. 246,766, 12-27-77, Cl. D10-57.000.
Filmation Associates: *See—*
Brubaker, Curtis, 246,772, Cl. D12-1.000.
Brubaker, Curtis, 246,775, Cl. D12-90.000.
Flex-a-lite Corporation: *See—*
Bonifant, Bern M., 246,794, Cl. D23-165.000.
Bonifant, Bern M., 246,795, Cl. D23-165.000.
Florists' Transworld Delivery Association: *See—*
Harshman, Arthur L.; and Messmer, James I., 246,749, Cl. D7-1.000.
Harshman, Arthur L.; and Messmer, James I., 246,750, Cl. D7-28.000.
Foster Grant Co., Inc.: *See—*
Marchi, Vitalino, 246,789, Cl. D16-65.000.
Fukuda, Kiyoshi; and Kajiwara, Daisuke, to Matsushita Electric Industrial Co., Ltd. Vacuum cleaner. 246,752, 12-27-77, Cl. D7-164.000.

Fukushima, Hisao; Watanabe, Katsuhito; and Watanabe, Tsutomu, to Oki Electric Industry Co., Ltd. Telephone set. 246,784, 12-27-77, Cl. D14-53.000.
GAF Corporation: *See—*
Simonelli, Robert M.; Miller, Paul D.; and Porcelli, V. Lorenzo, 246,788, Cl. D16-12.000.
Genova, Peter J. Combined fairway map, yard marker and ball washer for a golf course. 246,808, 12-27-77, Cl. D34-5.0CB.
Genova, Peter J. Combined fairway map, yard marker, ball washer and refuse receiver and bench for a golf course. 246,809, 12-27-77, Cl. D34-5.0CB.
Genova, Peter J. Combined fairway map, yard marker, refuse receiver, bench and ball washer for a golf course. 246,810, 12-27-77, Cl. D34-5.0CB.
Goldman, Jerome N.: *See—*
Goldman, Marvin A.; Goldman, Jerome N.; DiMarchi, Silvio J.; and Mesquida, Barbara A., 246,793, Cl. D23-4.000.
Goldman, Marvin A.; Goldman, Jerome N.; DiMarchi, Silvio J.; and Mesquida, Barbara A., to Penn-Plax Plastics, Inc. Aquarium filter. 246,793, 12-27-77, Cl. D23-4.000.
Gruenhut, Joseph H., to Brunswick Corporation. Air cushion game table. 246,805, 12-27-77, Cl. D34-5.0BB.
Hardy, Tommy R.; and Kneale, Collan B., to International Business Machines Corporation. Data-collection apparatus. 246,783, 12-27-77, Cl. D14-40.000.
Harshman, Arthur L.; and Messmer, James I., to Florists' Transworld Delivery Association. Oval bowl. 246,749, 12-27-77, Cl. D7-1.000.
Harshman, Arthur L.; and Messmer, James I., to Florists' Transworld Delivery Association. Round bowl. 246,750, 12-27-77, Cl. D7-28.000.
Hart, Henry. Locking device for vehicles. 246,760, 12-27-77, Cl. D8-341.000.
Heath Company: *See—*
Renken, Richard W., 246,780, Cl. D14-12.000.
Hodgson, Roy George: *See—*
Smyth, Norman Linfoot; and Hodgson, Roy George, 246,756, Cl. D8-91.000.
Honda Giken Kogyo Kabushiki Kaisha: *See—*
Ukai, Kiyoshi, 246,758, Cl. D8-303.000.
Ideal Security Hardware Corporation: *See—*
Waldo, Russell W., 246,757, Cl. D8-301.000.
Iezzi, William. Handle for ski pole or the like. 246,806, 12-27-77, Cl. D34-14.00D.
Instrument Systems Corporation: *See—*
Saiya, Robert F., 246,782, Cl. D14-36.000.
International Business Machines Corporation: *See—*
Hardy, Tommy R.; and Kneale, Collan B., 246,783, Cl. D14-40.000.
James Neill Holdings Limited: *See—*
Smyth, Norman Linfoot; and Hodgson, Roy George, 246,756, Cl. D8-91.000.
Jenkins, Charmaine A. Chewed gum disposal receptacle. 246,753, 12-27-77, Cl. D7-191.000.
Jermyn, Arthur C. Bite-wing dental x-ray film holder. 246,797, 12-27-77, Cl. D24-02.000.
Jermyn, Arthur Charles. Periapical exposure dental x-ray film holder. 246,798, 12-27-77, Cl. D24-2.000.
Johnson, Bruce R.: *See—*
Brandt, Larry A.; and Johnson, Bruce R., 246,747, Cl. D4-02.000.
Kajiwara, Daisuke: *See—*
Fukuda, Kiyoshi; and Kajiwara, Daisuke, 246,752, Cl. D7-164.000.
Kelley, Craig B.; and Cole, David C., to Emhart Industries, Inc. Key blank. 246,761, 12-27-77, Cl. D8-347.000.
Kelman, Pepi G. Bracelet. 246,768, 12-27-77, Cl. D11-4.000.
Kesler, Gerry Donald. Applicator for suntan lotions and other liquids. 246,804, 12-27-77, Cl. D28-7.000.
Klosk, Lawrence. Rubbish receptacle. 246,754, 12-27-77, Cl. D7-194.000.
Kneale, Collan B.: *See—*
Hardy, Tommy R.; and Kneale, Collan B., 246,783, Cl. D14-40.000.
Kozak, Raymond. Tie clip. 246,769, 12-27-77, Cl. D11-48.000.
Kramer, Jochen: *See—*
Bode, Kurt; and Kramer, Jochen, 246,786, Cl. D16-4.000.
Bode, Kurt; and Kramer, Jochen, 246,787, Cl. D16-04.000.
Krolopp, Rudolph William, to Motorola, Inc. Microphone or similar article. 246,781, 12-27-77, Cl. D14-12.000.
Labra, Edgardo R.: *See—*
Dimiceli, Joseph W.; and Labra, Edgardo R., 246,762, Cl. D8-364.000.
Laymon, Stephen A.; and Chou, Cheng-Chien, to Wallace Murray Corporation. Radiator cooling fan. 246,796, 12-27-77, Cl. D23-165.000.
Loughner, Larry G. Pair of spectacles. 246,790, 12-27-77, Cl. D16-65.000.
Loughner, Larry G., to American Optical Corporation. Pair of spectacles. 246,792, 12-27-77, Cl. D16-65.000.
Luedtke, Warren J., to S. C. Johnson & Son, Inc. Squeeze bottle. 246,763, 12-27-77, Cl. D9-2.000.
Marchi, Vitalino, to Foster Grant Co., Inc. Pair of spectacles. 246,789, 12-27-77, Cl. D16-65.000.
Matsushita Electric Industrial Co., Ltd.: *See—*
Fukuda, Kiyoshi; and Kajiwara, Daisuke, 246,752, Cl. D7-164.000.
Mesquida, Barbara A.: *See—*
Goldman, Marvin A.; Goldman, Jerome N.; DiMarchi, Silvio J.; and Mesquida, Barbara A., 246,793, Cl. D23-4.000.
Messmer, James I.: *See—*
Harshman, Arthur L.; and Messmer, James I., 246,749, Cl. D7-1.000.
Harshman, Arthur L.; and Messmer, James I., 246,750, Cl. D7-28.000.
Miller, Paul D.: *See—*
Simonelli, Robert M.; Miller, Paul D.; and Porcelli, V. Lorenzo, 246,788, Cl. D16-12.000.
Mondragon, Ralph. House. 246,802, 12-27-77, Cl. D25-19.000.
Moore, Aaron C. Kite. 246,807, 12-27-77, Cl. D34-15.0AF.
Moore, Michael C. Motorized tricycle. 246,776, 12-27-77, Cl. D12-110.000.
Motorola, Inc.: *See—*
Krolopp, Rudolph William, 246,781, Cl. D14-12.000.
Murray Ohio Manufacturing Co., The: *See—*
Cognata, Larry M., 246,778, Cl. D12-126.000.
Cognata, Larry M., 246,779, Cl. D12-126.000.
Needham, Robert John. Electrical measuring instrument. 246,767, 12-27-77, Cl. D10-78.000.
Oki Electric Industry Co., Ltd.: *See—*
Fukushima, Hisao; Watanabe, Katsuhito; and Watanabe, Tsutomu, 246,784, Cl. D14-53.000.
Owens-Illinois, Inc.: *See—*
Veasy, John Paul, 246,764, Cl. D9-137.000.
Peeler, Donald H., to Sybron Corporation. Sphygmomanometer. 246,799, 12-27-77, Cl. D24-21.000.
Penn-Plax Plastics, Inc.: *See—*
Goldman, Marvin A.; Goldman, Jerome N.; DiMarchi, Silvio J.; and Mesquida, Barbara A., 246,793, Cl. D23-4.000.
Porcelli, V. Lorenzo: *See—*
Simonelli, Robert M.; Miller, Paul D.; and Porcelli, V. Lorenzo, 246,788, Cl. D16-12.000.
Renken, Richard W., to Heath Company. Microphone/encoder module. 246,780, 12-27-77, Cl. D14-12.000.
Rollei-Werke Franke & Heidecke: *See—*
Bode, Kurt; and Kramer, Jochen, 246,786, Cl. D16-4.000.
Bode, Kurt; and Kramer, Jochen, 246,787, Cl. D16-04.000.
Root, James R. Ice hammer. 246,755, 12-27-77, Cl. D8-77.000.
Rubbermaid Commercial Products Inc.: *See—*
Yonkers, Ronald C., 246,751, Cl. D7-129.000.
Rutledge, James T. Noisemaker for bicycle or the like. 246,777, 12-27-77, Cl. D12-114.000.
S. C. Johnson & Son, Inc.: *See—*
Luedtke, Warren J., 246,763, Cl. D9-2.000.
Saiya, Robert F., to Instrument Systems Corporation. Stethoscope headset. 246,782, 12-27-77, Cl. D14-36.000.
Shindler, Anthony. Pair of spectacles. 246,791, 12-27-77, Cl. D16-65.000.
Simonelli, Robert M.; Miller, Paul D.; and Porcelli, V. Lorenzo, to GAF Corporation. Stereoscopic viewer. 246,788, 12-27-77, Cl. D16-12.000.
Smyth, Norman Linfoot; and Hodgson, Roy George, to James Neill Holdings Limited. Saw sharpener or the like. 246,756, 12-27-77, Cl. D8-91.000.
Steinberg, Mack. Cigarette and cigar holder. 246,803, 12-27-77, Cl. D27-02.000.
Sugioka, Takami: *See—*
Abe, Isamu; and Sugioka, Takami, 246,785, Cl. D15-66.000.
Sulek, Eugene Joseph, to Texas Instruments Incorporated. Digital wrist watch. 246,765, 12-27-77, Cl. D10-38.000.
Sybron Corporation: *See—*
Peeler, Donald H., 246,799, Cl. D24-21.000.
Teijin Limited: *See—*
Abe, Isamu; and Sugioka, Takami, 246,785, Cl. D15-66.000.
Teijin Seiki Co., Ltd.: *See—*
Abe, Isamu; and Sugioka, Takami, 246,785, Cl. D15-66.000.
Telatemp Corporation: *See—*
Everest, Charles E., 246,766, Cl. D10-57.000.
Texas Instruments Incorporated: *See—*
Sulek, Eugene Joseph, 246,765, Cl. D10-38.000.
Tricario, John R. Holder for a telephone directory. 246,748, 12-27-77, Cl. D6-131.000.
Ukai, Kiyoshi, to Honda Giken Kogyo Kabushiki Kaisha. Handle grip for vehicle. 246,758, 12-27-77, Cl. D8-303.000.
Veasy, John Paul, to Owens-Illinois, Inc. Bottle. 246,764, 12-27-77, Cl. D9-137.000.
Waldo, Russell W., to Ideal Security Hardware Corporation. Combined door pull and escutcheon. 246,757, 12-27-77, Cl. D8-301.000.
Wallace Murray Corporation: *See—*
Laymon, Stephen A.; and Chou, Cheng-Chien, 246,796, Cl. D23-165.000.
Watanabe, Katsuhito: *See—*
Fukushima, Hisao; Watanabe, Katsuhito; and Watanabe, Tsutomu, 246,784, Cl. D14-53.000.
Watanabe, Tsutomu: *See—*
Fukushima, Hisao; Watanabe, Katsuhito; and Watanabe, Tsutomu, 246,784, Cl. D14-53.000.
Wong, Johnson N. S. Vial. 246,800, 12-27-77, Cl. D24-56.000.
Yonkers, Ronald C., to Rubbermaid Commercial Products Inc. Drain tray for a food service pan. 246,751, 12-27-77, Cl. D7-129.000.

CLASSIFICATION OF PATENTS

ISSUED DECEMBER 27, 1977

NOTE.—First number, class; second number, subclass; third number, patent number

CLASS 2

84	4,064,562
161 A	4,064,563
168	4,064,564
412	4,064,565

CLASS 3

1.9	4,064,566
1.91	4,064,567
1.911	4,064,568
26	4,064,569

CLASS 4

147	4,064,570
172.19	4,064,571
227	4,064,572
	4,064,573

CLASS 5

82 R	4,064,574
327 B	4,064,580
331	4,064,575
334 C	4,064,576
334 R	4,064,577
355	4,064,578
371	4,064,579

CLASS 7

14.1 R	4,064,581

CLASS 8

1 C	4,065,254
10.2	4,065,255
74	4,065,257
115.5	4,065,256
142	4,065,258
149.1	4,064,583
149.3	4,064,582
166	4,065,259

CLASS 9

1.1	4,064,584

CLASS 10

130 WH	4,064,585

CLASS 13

10	4,065,634

CLASS 15

1.7	4,064,586
175	4,064,587
236 R	4,064,588

CLASS 16

53	4,064,589
90	4,064,590
99	4,064,591
100	4,064,592
105	4,064,593
125	4,064,594
128 R	4,064,595

CLASS 17

11.1 R	4,064,596

CLASS 19

96	4,064,599
105	4,064,598
156.3	4,064,597
	4,064,600

CLASS 21

2.7 R	4,065,260
74 R	4,065,261
	4,065,262

CLASS 23

253 TP	4,065,263
258.5 BH	4,065,264
259.2	4,065,266
259.5	4,065,265
263	4,065,267
288 B	4,065,269
288 F	4,065,268
299	4,065,270

CLASS 24

16 PB	4,064,601
205.1 C	4,064,602
230 A	4,064,603
236	4,064,604

CLASS 28

103	4,064,605

CLASS 29

25.42	4,064,606
116 AD	4,064,607
132	4,064,608
235	4,064,609
243.5	4,064,610
270	4,064,611
278	4,064,612
407	4,064,613
417	4,064,614
426	4,064,615
429	4,064,616
432.1	4,064,617
451	4,064,618
458	4,064,619
569 L	4,064,621
580	4,064,620
625	4,064,622
629	4,064,623
753	4,064,624

CLASS 30

90	4,064,625
287	4,064,626
	4,064,627

CLASS 32

14 B	4,064,628
15	4,064,629
22	4,064,630

CLASS 33

2 R	4,064,631
143 D	4,064,632
147 E	4,064,633
147 L	4,064,634

CLASS 34

58	4,064,635
60	4,064,636
122	4,064,637
174	4,064,638
212	4,064,639

CLASS 35

12 K	4,064,640

CLASS 36

1.5	4,064,641
44	Re.29,501
92	4,064,642

CLASS 40

65	4,064,643
152	4,064,644
159	4,064,645

CLASS 43

42.41	4,064,646

CLASS 46

81	4,064,647

CLASS 47

17	4,064,648

CLASS 49

250	4,064,649
277	4,064,650
319	4,064,651
394	4,064,652
458	4,064,653
489	4,064,654
501	4,064,655

CLASS 51

33 W	4,064,657
110	4,064,658
277	4,064,659
283 R	4,064,660
424	4,064,661
426	4,064,656

CLASS 52

71	4,064,662
80	4,064,663
136	4,064,664
155	4,064,665
171	4,064,666
204	4,064,667
295	4,064,668
299	4,064,669
473	4,064,670
696	4,064,671
726	4,064,672

CLASS 53

3	4,064,673
23	4,064,674
54	4,064,675
77	4,064,676
123	4,064,677
183	4,064,678

CLASS 55

2	4,065,271
25	4,065,272
50	4,065,273
89	4,065,274
121	4,065,275
276	4,065,276
418	4,065,277

CLASS 56

2	4,064,679
11.9	4,064,680
121.45	4,064,681
327 A	4,064,682
328 TS	4,064,683

CLASS 57

35	4,064,684
55	4,064,685
140 J	4,064,686

CLASS 58

4 A	4,064,687
50 R	4,064,688
	4,064,689

CLASS 60

39.06	4,064,691
39.16 R	4,064,690
261	4,064,692
290	4,064,693
413	4,064,694
517	4,064,695
598	4,064,696
624	4,064,697
664	4,064,698
	4,064,699

CLASS 61

4	4,064,700
45 D	4,064,701
53.5	4,064,702
53.68	4,064,703

CLASS 62

2	4,064,705
26	4,065,278
64	4,064,706
374	4,064,707
510	4,065,279

CLASS 64

1 V	4,064,708

CLASS 65

3 A	4,065,280
19	4,065,281
28	4,065,282
30 E	4,065,283
114	4,065,284
182 R	4,065,285
229	4,065,286

CLASS 66

135	4,064,709
157	4,064,710
	4,064,711
192	4,064,712

CLASS 68

5 E	4,064,713

CLASS 70

18	4,064,714
	4,064,715
38 A	4,064,716
165	4,064,717
302	4,064,718
355	4,064,719
363	4,064,720
416	4,064,721
456 B	4,064,722

CLASS 71

13	4,065,287
76	4,065,288
82	4,065,289
94	4,065,290
95	4,065,291
99	4,065,292
100	4,065,293

CLASS 72

60	4,064,723
70	4,064,726
108	4,064,724
147	4,064,725
179	4,064,727
238	4,064,728
256	4,064,729
393	4,064,730
419	4,064,731
449	4,064,732
453.03	4,064,733
455	4,064,734

CLASS 73

1 R	4,064,735
5	4,064,736
17 R	4,064,737
32 A	4,064,738
	4,064,739
38	4,064,740
80	4,064,743
88.5 R	4,064,744
91	4,064,745
116	4,064,746
	4,064,747
117.3	4,064,748
152	4,064,749
194 R	4,064,750
207	4,064,751
302	4,064,752
304 C	4,064,753
313	4,064,754
	4,064,755
349	4,064,756
362 AR	4,064,757
398 AR	4,064,758
409	4,064,759
421 R	4,064,760
462	4,064,761
487	4,064,762
516 R	4,064,763
611	4,064,742
620	4,064,741
660	4,064,704

CLASS 74

2	4,064,764
6	4,064,765
473 R	4,064,766
491	4,064,767
528	4,064,768
878	4,064,769

CLASS 75

3	4,065,294
5	4,065,295
48	4,065,296
52	4,065,297
60	4,065,298
67 A	4,065,299
117	4,065,300
203	4,065,301
208 R	4,065,302
226	4,065,303

CLASS 76

37	4,064,770

CLASS 81

52.3	4,064,771
57.13	4,064,772

CLASS 82

38 A	4,064,773
45	4,064,774

CLASS 83

4	4,064,775
171	4,064,776

CLASS 84

1.03	4,064,777
1.25	4,064,778
314	4,064,779
	4,064,780
322	4,064,781
477 R	4,064,782

CLASS 85

33	4,064,783
41	4,064,784
62	4,064,785

CLASS 89

33 B	4,064,786
34	4,064,787

CLASS 91

395	4,064,788
417 R	4,064,789
492	4,064,790

CLASS 93

1 C	4,064,791
18	4,064,792

CLASS 96

1 LY	4,065,304
1 R	4,065,306
1 SD	4,065,305
1.5 R	4,065,307
	4,065,308
14	4,065,309
27 R	4,065,310
	4,065,311
48 QP	4,065,315
50 R	4,065,312
60 BF	4,065,313
115 R	4,065,314

CLASS 98

58	4,064,793

CLASS 99

304	4,064,795
330	4,064,796
341	4,064,797
474	4,064,794

CLASS 100

229 A	4,064,798

CLASS 101

93.02	4,064,799
93.14	4,064,800
147	4,064,801
327	4,064,802
415.1	4,064,803
451	4,064,804

CLASS 102

35	4,064,805
70.2 R	4,064,806

CLASS 104

7 A	4,064,807
148 MS	4,064,808

CLASS 105

167	4,064,809
378	4,064,810
476	4,064,811

CLASS 106

20	4,065,316
52	4,065,317
90	4,065,318
93	4,065,319
100	4,065,320
106	4,065,321

CLASS 108

36	4,064,812
60	4,064,813
64	4,064,814
129	4,064,815

CLASS 110

14	Re.29,502

CLASS 112

79 A	4,064,816
158 F	4,064,817
258	4,064,818

CLASS 113

55	4,064,819

CLASS 114

74 R	4,064,820
103	4,064,821
230	4,064,822

CLASS 115

17	4,064,823
41 HT	4,064,824

CLASS 116

81	4,064,825
114 Y	4,064,827
114.5	4,064,828
117 C	4,064,826

CLASS 118

49.1	4,064,829
57	4,064,830
303	4,064,831
323	4,064,832
646	4,064,833
	4,064,834

CLASS 119

1	4,064,835
3	4,064,836
5	4,064,837
14.08	4,064,838
15	4,064,839

CLASS 123

3	4,064,840
8.47	4,064,841
25 L	4,064,842
32 EA	4,064,844
	4,064,846
32 EJ	4,064,843
	4,064,847
32 G	4,064,845
41.54	4,064,848
75 B	4,064,849
	4,064,850
119 B	4,064,851
	4,064,853
119 E	4,064,852
139 AW	4,064,854
139 DP	4,064,855
140 R	4,064,856
141	4,064,857
148 DS	4,064,858
148 E	4,064,859
191 S	4,064,860
198 F	4,064,861

CLASS 124

23 R	4,064,862
41 A	4,064,863

CLASS 126

121	4,064,864
271	4,064,865
	4,064,866
	4,064,867
	4,064,868

CLASS 128

2 G	4,064,871
2 H	4,064,872
2 N	4,064,870
2 R	4,064,869
12	4,064,873
80 C	4,064,874
142.2	4,064,875
146.6	4,064,876
188	4,064,877
206	4,064,878
215	4,064,879
294	4,064,880
325	4,064,881
351	4,064,882

CLASS 132

93	4,064,883

CLASS 134

7	4,065,322
10	4,065,323
15	4,064,884
30	4,065,324
58 R	4,064,885
95	4,064,886
144	4,064,887
167 R	4,065,325
182	4,064,888

CLASS 137
68 R 4,064,889
73 4,064,890
98 4,064,891
110 4,064,892
115 4,064,893
116.5 4,064,894
216 4,064,895
218 4,064,896
224 4,064,897
240 4,064,898
269 4,064,899
315 4,064,900
351 4,064,901
370 4,064,902
375 4,064,903
454.5 4,064,904
499 4,064,905
529 4,064,906
614.17 4,064,908
614.2 4,064,907
625.48 4,064,909
627.5 4,064,910

CLASS 138
30 4,064,911
94 4,064,912
125 4,064,913
142 4,064,914

CLASS 139
425 R 4,064,915

CLASS 140
2 4,064,916
105 4,064,917
123.6 4,064,918

CLASS 141
7 4,064,919

CLASS 144
200 4,064,920

CLASS 148
2 4,065,326
6.21 4,065,327
12.7 B 4,065,328
18 4,065,329
31.55 4,065,330
36 4,065,331

CLASS 149
19.9 4,065,332

CLASS 151
38 4,064,921

CLASS 152
347 4,064,922
427 4,064,923

CLASS 156
40 4,065,333
68 4,065,334
69 4,065,335
4,065,336
78 4,065,337
123 R 4,065,338
149 4,065,339
154 4,065,340
187 4,065,341
203 4,065,342
212 4,065,343
250 4,065,344
309 4,065,345

CLASS 159
6 R 4,065,346

CLASS 160
354 4,064,924

CLASS 162
26 4,065,347
49 4,065,348
158 4,065,349

CLASS 164
66 4,064,925
82 4,064,930
154 4,064,926
244 4,064,927
264 4,064,928
433 4,064,929

CLASS 165
1 4,064,931
4,064,932
89 4,064,933
97 4,064,934

CLASS 166
63 4,064,935
75 R 4,064,936
162 4,064,937
236 4,064,938
253 4,064,939

281 4,064,943
295 4,064,940
300 4,064,941
303 4,064,942

CLASS 169
60 4,064,944

CLASS 172
4 4,064,945
710 4,064,946
781 4,064,947

CLASS 173
12 4,064,948
14 4,064,949
151 4,064,950

CLASS 174
23 R 4,065,635
52 S 4,065,636
87 4,065,637

CLASS 175
45 4,064,951
209 4,064,952
321 4,064,953

CLASS 176
3 4,065,350
5 4,065,351
68 4,065,352

CLASS 177
25 4,064,954
134 4,064,955

CLASS 178
23 R 4,065,638
69.1 4,065,639

CLASS 179
7.1 TP 4,065,640
15 AT 4,065,641
18 AH 4,065,643
18 B 4,065,642
18 GF 4,065,644
156 R 4,065,645
170 R 4,065,646
175.1 A 4,065,647
178 4,065,648

CLASS 180
24.05 4,064,956
27 4,064,957
66 A 4,064,958
139 4,064,959
155 4,064,967

CLASS 181
114 4,064,964
131 4,064,965
144 4,064,966
210 4,064,960
213 4,064,961
244 4,064,963
272 4,064,962

CLASS 182
13 4,064,968

CLASS 184
1.5 4,064,969
15 B 4,064,970

CLASS 187
29 R 4,064,971

CLASS 188
24 4,064,972
71.3 4,064,974
71.7 4,064,973
73.5 4,064,975
234 4,064,976
317 4,064,977
331 4,064,978

CLASS 192
53 F 4,064,979
58 B 4,064,980
141 4,064,981

CLASS 195
2 4,065,353
63 4,065,354
66 R 4,065,355
80 R 4,065,356
103.5 R 4,065,357
127 4,065,358
4,065,359
139 4,065,360

CLASS 196
98 4,065,361

CLASS 197
1 A 4,064,983
1 R 4,064,982
52 4,064,984
114 R 4,064,985

CLASS 198
326 4,064,986
604 4,064,987

CLASS 200
5 A 4,065,649
4,065,651
5 R 4,065,650
175 4,065,652
302 4,065,653

CLASS 203
58 4,065,362

CLASS 204
1 T 4,065,363
15 4,065,364
25 4,065,365
98 4,065,366
4,065,367
159.23 4,065,368
164 4,065,369
192 N 4,065,370
195 C 4,065,373
195 R 4,065,371
195 S 4,065,372
228 4,065,374
237 4,065,375
263 4,065,376
290 F 4,065,377
297 W 4,065,378

CLASS 206
44 R 4,064,988
428 4,064,989
494 4,064,990

CLASS 208
67 4,065,379
89 4,065,380
134 4,065,381

CLASS 209
313 4,065,382

CLASS 210
27 4,065,383
31 C 4,065,384
44 4,065,385
60 4,065,386
62 4,065,387
80 4,065,388
96 R 4,065,389
225 4,065,390
274 4,065,391
282 4,065,392
377 4,065,393

CLASS 211
49 R 4,064,991
75 4,064,992
85 4,064,993
153 4,064,994
187 4,064,995
191 4,064,996

CLASS 212
39 B 4,064,997

CLASS 213
69 4,064,998

CLASS 214
1 BV 4,065,001
1 C 4,065,000
1 SW 4,064,999
14 4,065,002
16.6 4,065,003
36 4,065,004
41 R 4,065,005
42 R 4,065,006
62 A 4,065,007
83.3 4,065,008
131 A 4,065,009
138 D 4,065,010
146 E 4,065,011
510 4,065,012
620 4,065,013
621 4,065,014
750 4,065,015

CLASS 215
6 4,065,016
211 4,065,017
231 4,065,018

CLASS 219
10.55 D 4,065,655
10.55 F 4,065,654
121 LM 4,065,656
225 4,065,657
386 4,065,658
398 4,065,659
535 4,065,660

CLASS 220
9 LG 4,065,019
18 4,065,020
22 4,065,021
71 4,065,022
75 4,065,023
203 4,065,024
258 4,065,025
304 4,065,026
343 4,065,027

CLASS 221
36 4,065,028

CLASS 222
3 4,065,029
55 4,065,030
56 4,065,031
77 4,065,032
107 4,065,033
146 HE 4,065,034
153 4,065,035
4,065,036
4,065,037
321 4,065,038

CLASS 224
2 B 4,065,039
5 D 4,065,040
42.1 D 4,065,041

CLASS 226
92 4,065,042
141 4,065,043
188 4,065,044

CLASS 227
147 4,065,045

CLASS 228
156 4,065,046

CLASS 229
41 C 4,065,047
43 4,065,048
55 4,065,049

CLASS 232
34 4,065,050
43.2 4,065,051

CLASS 235
419 4,065,662

CLASS 236
86 4,065,052

CLASS 237
1 A 4,065,053
8 R 4,065,054
12.1 4,065,055
67 4,065,056

CLASS 239
79 4,065,057
88 4,065,058
184 4,065,059

CLASS 241
16 4,065,060
81 4,065,061
101.7 4,065,062
275 4,065,063
299 4,065,064

CLASS 242
18 G 4,065,065
47.12 4,065,066
58.1 4,065,067
67.1 R 4,065,068
107.4 A 4,065,069
4,065,070
4,065,071
107.7 4,065,072
131 4,065,073
184 4,065,074
199 4,065,075

CLASS 243
38 4,065,076

CLASS 244
54 4,065,077
104 FP 4,065,078
152 4,065,079
155 A 4,065,080

CLASS 246
34 R 4,065,081

CLASS 248
9 4,065,082
19 4,065,083
117.1 4,065,084
124 4,065,085
188.6 4,065,086
201 4,065,087
242 4,065,088
245 4,065,089
318 4,065,090
473 4,065,091
503 4,065,092

CLASS 250
214 P 4,065,668
229 4,065,669
315 A 4,065,670
370 4,065,671
372 4,065,672
402 4,065,673
406 4,065,674
445 T 4,065,397
576 4,065,675

CLASS 251
6 4,065,093
26 4,065,094
118 4,065,095
137 4,065,096
228 4,065,097

CLASS 252
8.1 4,065,394
25 4,065,395
33.4 4,065,396
108 4,065,398
182 4,065,399
301.1 W 4,065,400
350 4,065,401
358 4,065,402
4,065,403
4,065,404
415 4,065,405
443 4,065,406
463 4,065,407
522 4,065,408
528 4,065,409

CLASS 254
29 A 4,065,098
164 4,065,099
167 4,065,100
184 4,065,101
186 HC 4,065,102

CLASS 256
11 4,065,103
13.1 4,065,104

CLASS 260
2.5 AM 4,065,410
2.5 B 4,065,411
8 4,065,412
9 4,065,413
17 R 4,065,414
17.4 CL 4,065,417
17.4 SG 4,065,415
4,065,416
23 XA 4,065,418
28.5 D 4,065,419
29.2 N 4,065,420
29.4 R 4,065,421
29.6 E 4,065,422
29.7 H 4,065,423
31.8 DB 4,065,424
33.6 AQ 4,065,426
33.6 EP 4,065,425
45.75 B 4,065,428
45.8 NT 4,065,427
45.95 G 4,065,429
47 C 4,065,431
4,065,432
47 ET 4,065,434
47 UA 4,065,430
4,065,433
47 UP 4,065,435
47 XA 4,065,436
49 4,065,437
75 R 4,065,438
4,065,439
4,065,440
78 R 4,065,441
78.41 4,065,442
79.5 B 4,065,443
112 B 4,065,445
146 D 4,065,446
163 4,065,447
176 4,065,448
4,065,449
239 B 4,065,450
239.3 D 4,065,451
239.55 D 4,065,452
250 P 4,065,454
289 K 4,065,457
289 R 4,065,456
289 XA 4,065,455
293.55 4,065,458
294.8 C 4,065,459
4,065,460
296 AE 4,065,461
299 4,065,462
307 A 4,065,463
326 N 4,065,471
326.15 4,065,464
4,065,465
327 M 4,065,466
332.2 C 4,065,472
340.5 R 4,065,473
345.2 4,065,467
346.71 4,065,469
346.75 4,065,468
4,065,470
347.7 4,065,474
348.29 4,065,476
348.31 4,065,475
369 4,065,477
382 4,065,478
429 L 4,065,479
429.9 4,065,480
438.1 4,065,481
448.2 E 4,065,482
449.5 4,065,483
449.6 M 4,065,484
464 4,065,485
465 C 4,065,487
465.3 4,065,486
467 4,065,488
502.5 4,065,491
508 4,065,492
514 D 4,065,493
4,065,494
534 M 4,065,495
561 R 4,065,496
563 P 4,065,497
566 F 4,065,498
567.6 M 4,065,499
4,065,500
570.6 4,065,501
590 R 4,065,502
592 4,065,503
600 R 4,065,504
4,065,505
601 R 4,065,506
604 R 4,065,507
606.5 B 4,065,509
613 R 4,065,508
632 B 4,065,510
635 R 4,065,511
641 4,065,512
656 R 4,065,513
676 R 4,065,514
683.47 4,065,516
683.68 4,065,515
823 4,065,517
836 4,065,518
857 TW 4,065,519
878 B 4,065,520
879 4,065,521
880 R 4,065,444
4,065,522
885 4,065,523
895 4,065,524
989 4,065,525

CLASS 261
62 4,065,526
79 A 4,065,527
114 R 4,065,528

CLASS 264
3 E 4,065,529
41 4,065,530
4,065,531
68 4,065,532
81 4,065,533
91 4,065,534
94 4,065,535
98 4,065,536
143 4,065,537
154 4,065,538
251 4,065,539
278 4,065,540
295 4,065,541

CLASS 266
69 4,065,109
78 4,065,110
138 4,065,111

CLASS 267
34 4,065,112
156 4,065,113

CLASS 269
2 4,065,114
16 4,065,115
22 4,065,116

CLASS 270
58 4,065,117

CLASS 271
14 4,065,118
172 4,065,119
174 4,065,120
4,065,121
201 4,065,122
215 4,065,123

CLASS 272
65 4,065,124

CLASS 273
5 R 4,065,125
58 A 4,065,126

81 D 4,065,127
85 D 4,065,128
121 A 4,065,129
130 AB 4,065,130
134 B 4,065,131
153 R 4,065,132
167 E 4,065,133

CLASS 274
37 4,065,134
39 R 4,065,135

CLASS 277
3 4,065,136
34 4,065,137
230 4,065,138

CLASS 279
62 4,065,139

CLASS 280
11.37 E 4,065,140
33.99 B 4,065,142
33.99 H 4,065,141
43.23 4,065,143
87.02 R 4,065,145
278 4,065,146
432 4,065,148
4,065,149
477 4,065,147
610 4,065,150
618 4,065,151
668 4,065,152
704 4,065,153
707 4,065,154
744 4,065,155
747 4,065,156
751 4,065,157
771 4,065,144

CLASS 282
27.5 4,065,158

CLASS 285
136 4,065,159

CLASS 292
92 4,065,160
113 4,065,161
340 4,065,162
341.15 4,065,163
347 4,065,164
348 4,065,165

CLASS 296
23 G 4,065,166
28 C 4,065,167
28 M 4,065,168
35 R 4,065,169
37.1 4,065,170
97 E 4,065,171

CLASS 297
19 4,065,172
45 4,065,173
66 4,065,174
130 4,065,175
304 4,065,176
327 4,065,177
341 4,065,178
384 4,065,179
4,065,180
452 4,065,181
4,065,182

CLASS 299
4 4,065,183
34 4,065,184
86 4,065,185

CLASS 301
12 R 4,065,186

CLASS 307
66 4,065,676
112 4,065,677
214 4,065,680
237 4,065,678
246 4,065,681
251 4,065,679
261 4,065,682
264 4,065,683
279 4,065,187

CLASS 308
10 4,065,188
4,065,189
15 4,065,190
202 4,065,191
215 4,065,192
233 4,065,193

CLASS 310
49 R 4,065,685
68 D 4,065,686
314 4,065,687
351 4,065,684

CLASS 312
247 4,065,194
258 4,065,195
333 4,065,196

CLASS 313
25 4,065,688
56 4,065,689
57 4,065,690
174 4,065,691
222 4,065,694
325 4,065,692
406 4,065,693
466 4,065,695
480 4,065,696
4,065,697
489 4,065,698

CLASS 315
169 TV 4,065,699
241 R 4,065,700
248 4,065,701

CLASS 318
161 4,065,702
176 4,065,703
237 4,065,704
245 4,065,705
254 4,065,706
285 4,065,707
685 4,065,708

CLASS 320
1 4,065,709
2 4,065,710
14 4,065,711
39 4,065,712

CLASS 324
.5 A 4,065,714
60 CD 4,065,715
96 4,065,716
158 P 4,065,717

CLASS 325
65 4,065,718
312 4,065,719
464 4,065,720

CLASS 328
1 4,065,721

CLASS 329
105 4,065,722

CLASS 330
252 4,065,724
254 4,065,725
288 4,065,726
302 4,065,723

CLASS 331
51 4,065,727
75 4,065,728
94.5 C 4,065,732
94.5 G 4,065,731
94.5 H 4,065,729
4,065,730
112 4,065,733

CLASS 333
30 R 4,065,734
72 4,065,735
4,065,736

CLASS 335
212 4,065,737
213 4,065,738
234 4,065,739

CLASS 336
136 4,065,740

CLASS 337
407 4,065,741

CLASS 338
9 4,065,742
308 4,065,743

CLASS 339
17 D 4,065,198
17 F 4,065,199
17 M 4,065,197
65 4,065,200
103 R 4,065,201

CLASS 340
3 D 4,065,744
4,065,745
5 R 4,065,747
5 S 4,065,746
9 4,065,748
15.5 MC 4,065,749
58 4,065,750
4,065,751
146.1 AJ 4,065,752
152 T 4,065,753
166 R 4,065,754
171 PF 4,065,755
227 R 4,065,758
237.5 4,065,759
244 R 4,065,760
271 4,065,761
285 4,065,762
310 R 4,065,763
324 M 4,065,764
347 AD 4,065,766
347 DD 4,065,765
384 E 4,065,767

CLASS 343
5 SC 4,065,770
9 4,065,768
17.7 4,065,769
100 SA 4,065,771
786 4,065,772

CLASS 346
75 4,065,773
140 R 4,065,774
4,065,775

CLASS 350
3.5 4,065,202
96 C 4,065,203
102 4,065,204
216 4,065,205
301 4,065,206
312 4,065,207

CLASS 351
6 4,065,208

CLASS 352
72 4,065,209

CLASS 354
23 D 4,065,776
23 R 4,065,777
25 4,065,778
145 4,065,779
235 Re.29,505

CLASS 355
91 4,065,210

CLASS 356
152 4,065,211
167 4,065,212
200 4,065,213

CLASS 357
6 4,065,780
23 4,065,781
4,065,782
41 4,065,783

CLASS 358
13 4,065,784
44 4,065,785
128 4,065,786
160 4,065,787
166 4,065,788
167 4,065,789
172 4,065,790
213 4,065,791
286 4,065,792

CLASS 360
6 4,065,793
10 4,065,794
35 4,065,795
51 4,065,796
113 4,065,797
128 4,065,798
135 4,065,799
137 4,065,800
4,065,801

CLASS 361
18 4,065,802
88 4,065,803
96 4,065,804
196 4,065,805

CLASS 362
217 4,065,667
419 4,065,806

CLASS 363
16 4,065,807
19 4,065,713

CLASS 364
200 4,065,808
4,065,809
4,065,810
464 4,065,661
4,065,663
487 4,065,664
4,065,665
759 4,065,666

CLASS 365
49 4,065,756
244 4,065,757

CLASS 366
76 4,065,106
4,065,108
244 4,065,811
343 4,065,107
348 4,065,105

CLASS 401
2 4,065,214
199 4,065,215

CLASS 403
4 4,065,216
24 4,065,217
71 4,065,218
169 4,065,220
284 4,065,221
287 4,065,219

CLASS 407
18 4,065,222
114 4,065,223

CLASS 408
230 4,065,224

CLASS 416
121 4,065,225

CLASS 417
40 4,065,226
45 4,065,227
212 4,065,228
270 4,065,229
317 4,065,230
357 4,065,231
368 4,065,232
4,065,233
420 4,065,234
4,065,235
492 Re.29,503
493 4,065,236
503 4,065,237

CLASS 423
35 4,065,542
240 4,065,543
252 4,065,544
265 4,065,545
300 4,065,546
321 S 4,065,547
410 4,065,548
447.4 4,065,549
464 4,065,550
483 4,065,551

CLASS 424
1 4,065,552
5 4,065,553
4,065,554
66 4,065,564
83 4,065,555
181 4,065,556
4,065,557
216 4,065,558
229 4,065,559
246 4,065,560
248.56 4,065,453
250 4,065,565
263 4,065,561
266 4,065,566
267 4,065,562
272 4,065,563
4,065,567
273 P 4,065,568
273 R 4,065,569
4,065,570
4,065,571
4,065,572
278 4,065,573
283 4,065,574
4,065,575
316 4,065,584
318 4,065,576
333 4,065,577

CLASS 425
94 4,065,238
141 4,065,239
222 4,065,240
228 4,065,241
384 4,065,242
393 4,065,243
412 4,065,244
503 4,065,245
528 4,065,246

CLASS 426
3 4,065,578
4,065,579
33 4,065,580
138 4,065,581
231 4,065,582
243 4,065,583

CLASS 427
11 4,065,585
22 4,065,586
54 4,065,587
89 4,065,588

CLASS 428
35 4,065,589
35 4,065,590
36 4,065,591
92 4,065,592
4,065,593
113 4,065,594
141 4,065,595
215 4,065,596
285 4,065,597
394 4,065,598
402 4,065,599
432 4,065,600
522 4,065,624
596 4,065,625
629 4,065,626

CLASS 429
50 4,065,601
72 4,065,602
99 4,065,603
103 4,065,604
112 4,065,605
198 4,065,606

CLASS 431
202 4,065,247
4,065,248

CLASS 432
8 4,065,249
24 4,065,250
59 4,065,251
77 4,065,252
105 4,065,253

CLASS 526
15 4,065,607
49 4,065,608
61 4,065,609
70 4,065,610
124 4,065,611
130 4,065,612
135 Re.29,504
292 4,065,613

CLASS 536
2 4,065,614
10 4,065,615
17 4,065,616

CLASS 542
450 4,065,617

CLASS 544
16 4,065,618
4,065,620
25 4,065,619
30 4,065,621
105 4,065,622
4,065,623

CLASS 560
5 B 4,065,629
26 4,065,627
4,065,630
53 4,065,628
55 4,065,631
4,065,632
59 4,065,489
121 4,065,633
204 4,065,490

CLASSIFICATION OF DESIGNS

D2— 181 246,746
D4— 02 246,747
D6— 131 246,748
D7— 1 246,749
28 246,750
129 246,751
164 246,752
191 246,753
194 246,754
D8— 77 246,755
91 246,756
301 246,757
303 246,758
306 246,759
341 246,760
347 246,761
364 246,762
D9— 2 246,763
137 246,764
D10— 38 246,765
57 246,766
78 246,767
D11— 4 246,768
48 246,769
139 246,770
143 246,771
D12— 1 246,772
22 246,773
34 246,774
90 246,775
110 246,776
114 246,777
126 246,778
246,779
D14— 12 246,780
246,781
36 246,782
40 246,783
53 246,784
D15— 66 246,785
D16— 4 246,786
04 246,787
12 246,788
65 246,789
246,790
246,791
246,792
D23— 4 246,793
165 246,794
246,795
246,796
D24— 2 246,798
02 246,797
21 246,799
56 246,800
D25— 7 246,801
19 246,802
D27— 02 246,803
D28— 7 246,804
D34— 5 BB 246,805
5 CB 246,808
246,809
246,810
14 D 246,806
15 AF 246,807

CLASSIFICATION OF PLANTS

P.— 20 4,172
22 4,173
36 4,169
43 4,170
4,171

GEOGRAPHICAL INDEX OF RESIDENCE OF INVENTORS

(U.S. States, Territories and Armed Forces, the Commonwealth of Puerto Rico, and the Canal Zone)

Alabama	1	Kentucky	21	Oregon	41
Alaska	2	Louisiana	22	Pennsylvania	42
American Samoa	3	Maine	23	Puerto Rico	43
Arizona	4	Maryland	24	Rhode Island	44
Arkansas	5	Massachusetts	25	South Carolina	45
California	6	Michigan	26	South Dakota	46
Canal Zone	7	Minnesota	27	Tennessee	47
Colorado	8	Mississippi	28	Texas	48
Connecticut	9	Missouri	29	Utah	49
Delaware	10	Montana	30	Vermont	50
District of Columbia	11	Nebraska	31	Virginia	51
Florida	12	Nevada	32	Virgin Islands	52
Georgia	13	New Hampshire	33	Washington	53
Guam	14	New Jersey	34	West Virginia	54
Hawaii	15	New Mexico	35	Wisconsin	55
Idaho	16	New York	36	Wyoming	56
Illinois	17	North Carolina	37	U.S. Air Force	57
Indiana	18	North Dakota	38	U.S. Army	58
Iowa	19	Ohio	39	U.S. Navy	59
Kansas	20	Oklahoma	40		

(First number in listing denotes location according to above key. Refer to patent number in body of the Official Gazette to obtain details as to inventor name, location, etc.)

PATENTS

1 :	4,064,868
	4,064,969
	4,065,202
	4,065,284
2 :	4,064,944
4 :	4,064,573
	4,064,590
	4,064,917
	4,065,185
	4,065,241
	4,065,300
	4,065,718
	4,065,725
	4,065,736
5 :	4,065,050
6 :	4,064,565
	4,064,566
	4,064,569
	4,064,570
	4,064,579
	4,064,589
	4,064,592
	4,064,593
	4,064,601
	4,064,620
	4,064,623
	4,064,642
	4,064,662
	4,064,668
	4,064,706
	4,064,738
	4,064,739
	4,064,758
	4,064,781
	4,064,803
	4,064,822
	4,064,827
	4,064,834
	4,064,837
	4,064,867
	4,064,873
	4,064,878
	4,064,880
	4,064,882
	4,064,904
	4,064,908
	4,064,909
	4,064,932
	4,064,935
	4,064,941
	4,064,951
	4,064,954
	4,064,961
	4,064,965
	4,064,966
	4,064,968
	4,064,976
	4,064,981
	4,064,983
	4,064,992
	4,064,994
	4,064,997
	4,065,000
	4,065,020
	4,065,032
	4,065,039
	4,065,040
	4,065,044
	4,065,053
	4,065,080
	4,065,083
	4,065,095
	4,065,097
	4,065,099
	4,065,102
	4,065,107
	4,065,114
	4,065,123
	4,065,129
	4,065,133
	4,065,140
	4,065,141
	4,065,142
	4,065,145
	4,065,162
	4,065,164
	4,065,166
	4,065,172
	4,065,173
	4,065,177
	4,065,183
	4,065,194
	4,065,212
	4,065,214
	4,065,218
	4,065,226
	4,065,235
	4,065,264
	4,065,282
	4,065,291
	4,065,299
	4,065,315
	4,065,336
	4,065,337
	4,065,354
	4,065,370
	4,065,371
	4,065,390
	4,065,396
	4,065,412
	4,065,424
	4,065,452
	4,065,484
	4,065,509
	4,065,526
	4,065,527
	4,065,555
	4,065,561
	4,065,614
	4,065,638
	4,065,645
	4,065,657
	4,065,668
	4,065,670
	4,065,680
	4,065,714
	4,065,715
	4,065,717
	4,065,727
	4,065,729
	4,065,731
	4,065,746
	4,065,747
	4,065,755
	4,065,760
	4,065,774
	4,065,788
	4,065,804
	4,065,807
8 :	4,064,725
	4,064,736
	4,064,865
	4,064,896
	4,065,105
	4,065,389
	4,065,642
	4,065,796
	4,065,799
9 :	Re.29,501
	Re.29,502
	4,064,564
	4,064,567
	4,064,654
	4,064,741
	4,064,742
	4,064,746
	4,064,833
	4,064,861
	4,064,885
	4,064,922
	4,064,987
	4,065,029
	4,065,036
	4,065,135
	4,065,176
	4,065,200
	4,065,230
	4,065,364
	4,065,407
	4,065,423
	4,065,441
	4,065,444
	4,065,472
	4,065,541
	4,065,607
	4,065,767
10 :	4,064,597
	4,064,712
	4,064,889
	4,065,259
	4,065,319
	4,065,431
	4,065,432
	4,065,434
	4,065,525
	4,065,535
12 :	4,064,562
	4,064,586
	4,064,618
	4,064,627
	4,064,705
	4,064,724
	4,064,729
	4,064,740
	4,064,750
	4,064,797
	4,064,821
	4,064,836
	4,064,840
	4,064,852
	4,065,051
	4,065,090
	4,065,104
	4,065,147
	4,065,189
	4,065,195
	4,065,219
	4,065,266
	4,065,325
	4,065,399
	4,065,582
	4,065,663
13 :	4,064,819
	4,064,857
	4,064,995
	4,065,220
	4,065,294
17 :	4,064,588
	4,064,595
	4,064,617
	4,064,633
	4,064,638
	4,064,664
	4,064,714
	4,064,737
	4,064,751
	4,064,765
	4,064,766
	4,064,767
	4,064,768
	4,064,769
	4,064,775
	4,064,776
	4,064,788
	4,064,790
	4,064,799
	4,064,801
	4,064,804
	4,064,824
	4,064,829
	4,064,855
	4,064,874
	4,064,907
	4,064,927
	4,064,933
	4,064,934
	4,064,945
	4,064,947
	4,064,959
	4,064,989
	4,065,004
	4,065,023
	4,065,045
	4,065,047
	4,065,088
	4,065,091
	4,065,093
	4,065,115
	4,065,130
	4,065,168
	4,065,198
	4,065,199
	4,065,205
	4,065,223
	4,065,228
	4,065,268
	4,065,269
	4,065,287
	4,065,314
	4,065,349
	4,065,384
	4,065,409
	4,065,440
	4,065,442
	4,065,580
	4,065,595
	4,065,602
	4,065,604
	4,065,605
	4,065,637
	4,065,653
	4,065,654
	4,065,673
	4,065,679
	4,065,689
	4,065,773
	4,065,775
	4,065,789
18 :	4,064,591
	4,064,655
	4,064,809
	4,064,842
	4,065,052
	4,065,109
	4,065,290
	4,065,385
	4,065,463
	4,065,559
	4,065,618
	4,065,620
	4,065,621
	4,065,646
	4,065,681
	4,065,692
	4,065,719
	4,065,720
	4,065,723
	4,065,740
	4,065,800
19 :	4,064,584
	4,064,596
	4,064,875
	4,064,895
	4,065,048
	4,065,479
20 :	4,064,667
	4,064,957
	4,065,038

	4,065,566
	4,065,801
21 :	4,064,985
	4,065,027
	4,065,158
	4,065,180
	4,065,253
	4,065,277
	4,065,344
	4,065,418
	4,065,498
	4,065,500
	4,065,591
	4,065,613
22 :	4,064,953
	4,064,999
	4,065,101
	4,065,381
	4,065,513
	4,065,516
	4,065,546
23 :	4,064,663
24 :	4,064,613
	4,064,680
	4,064,806
	4,064,871
	4,064,876
	4,065,068
	4,065,124
	4,065,210
	4,065,324
	4,065,644
	4,065,707
	4,065,771
25 :	4,064,646
	4,064,648
	4,064,672
	4,064,722
	4,064,747
	4,064,866
	4,064,990
	4,065,016
	4,065,018
	4,065,046
	4,065,066
	4,065,108
	4,065,279
	4,065,428
	4,065,601
	4,065,699
	4,065,701
	4,065,730
	4,065,732
	4,065,745
	4,065,772
26 :	4,064,603
	4,064,621
	4,064,652
	4,064,683
	4,064,695
	4,064,716
	4,064,755
	4,064,773
	4,064,792
	4,064,835
	4,064,845
	4,064,862
	4,064,863
	4,064,894
	4,064,928
	4,064,967
	4,064,970
	4,064,980
	4,064,993
	4,065,006
	4,065,010
	4,065,012
	4,065,058
	4,065,070
	4,065,072
	4,065,100
	4,065,144
	4,065,146
	4,065,152
	4,065,153
	4,065,155
	4,065,171
	4,065,178
	4,065,181
	4,065,182
	4,065,216
	4,065,222
	4,065,225
	4,065,249
	4,065,262
	4,065,425
	4,065,429
	4,065,499
	4,065,518
	4,065,556
	4,065,573
	4,065,574
	4,065,589
	4,065,628
	4,065,629
	4,065,631
	4,065,633
	4,065,721
	4,065,737
	4,065,750
	4,065,751
27 :	4,064,946
	4,065,005
	4,065,087
	4,065,201
	4,065,227
	4,065,422
	4,065,455
	4,065,502
	4,065,583
	4,065,627
	4,065,649
	4,065,703
	4,065,753
	4,065,757
28 :	4,064,636
29 :	4,064,815
	4,064,826
	4,065,028
	4,065,260
	4,065,373
	4,065,581
	4,065,659
31 :	4,064,864
	4,065,013
32 :	4,064,814
	4,065,765
33 :	4,064,611
	4,064,622
	4,065,685
34 :	4,064,612
	4,064,626
	4,064,635
	4,064,644
	4,064,647
	4,064,674
	4,064,748
	4,064,757
	4,064,760
	4,064,779
	4,064,793
	4,064,816
	4,064,872
	4,064,883
	4,064,912
	4,064,918
	4,064,919
	4,065,002
	4,065,021
	4,065,025
	4,065,089
	4,065,122
	4,065,132
	4,065,138
	4,065,150
	4,065,161
	4,065,197
	4,065,211
	4,065,263
	4,065,281
	4,065,302
	4,065,306
	4,065,309
	4,065,316
	4,065,317
	4,065,335
	4,065,350
	4,065,351
	4,065,356
	4,065,360
	4,065,368
	4,065,388
	4,065,392
	4,065,402
	4,065,403
	4,065,404
	4,065,405
	4,065,408
	4,065,466
	4,065,473
	4,065,477
	4,065,485
	4,065,497
	4,065,503
	4,065,537
	4,065,558
	4,065,563
	4,065,564
	4,065,567
	4,065,569
	4,065,588
	4,065,590
	4,065,612
	4,065,617
	4,065,666
	4,065,694
	4,065,709
	4,065,728
	4,065,739
	4,065,756
	4,065,786
35 :	4,065,217
36 :	4,064,581
	4,064,640
	4,064,641
	4,064,658
	4,064,671
	4,064,708
	4,064,715
	4,064,718
	4,064,771
	4,064,839
	4,064,858
	4,064,877
	4,064,914
	4,064,977
	4,064,984
	4,064,991
	4,064,998
	4,065,031
	4,065,042
	4,065,055
	4,065,057
	4,065,081
	4,065,151
	4,065,196
	4,065,204
	4,065,246
	4,065,305
	4,065,307
	4,065,308
	4,065,313
	4,065,357
	4,065,382
	4,065,420
	4,065,453
	4,065,482
	4,065,514
	4,065,521
	4,065,539
	4,065,544
	4,065,552
	4,065,578
	4,065,579
	4,065,586
	4,065,635
	4,065,636
	4,065,656
	4,065,682
	4,065,688
	4,065,705
	4,065,761
	4,065,762
	4,065,766
	4,065,778
	4,065,780
	4,065,783
	4,065,784
	4,065,790
	4,065,791
37 :	4,064,795
	4,064,923
	4,065,793
	4,065,810
38 :	4,065,726
39 :	4,064,614
	4,064,624
	4,064,670
	4,064,675
	4,064,691
	4,064,692
	4,064,704
	4,064,772
	4,064,784
	4,064,810
	4,064,830
	4,064,887
	4,064,898
	4,064,903
	4,064,913
	4,064,973
	4,064,978
	4,065,015
	4,065,026
	4,065,037
	4,065,094
	4,065,112
	4,065,134
	4,065,186
	4,065,206
	4,065,229
	4,065,237
	4,065,252
	4,065,274
	4,065,304
	4,065,322
	4,065,323
	4,065,334
	4,065,376
	4,065,394
	4,065,417
	4,065,443
	4,065,468
	4,065,480
	4,065,507
	4,065,522
	4,065,536
	4,065,543
	4,065,587
	4,065,643
	4,065,648
	4,065,672
	4,065,691
	4,065,696
	4,065,697
40 :	4,064,577
	4,064,752
	4,064,811
	4,064,937
	4,064,938
	4,064,940
	4,064,964
	4,065,034
	4,065,110
	4,065,511
	4,065,749
41 :	4,064,628
	4,065,014
	4,065,063
	4,065,647
42 :	4,064,580
	4,064,587
	4,064,594
	4,064,599
	4,064,600
	4,064,606
	4,064,650
	4,064,653
	4,064,697
	4,064,698
	4,064,699
	4,064,719
	4,064,753
	4,064,759
	4,064,764
	4,064,800
	4,064,890
	4,064,891
	4,064,902
	4,064,911
	4,064,979
	4,064,986
	4,064,988
	4,065,035
	4,065,060
	4,065,064
	4,065,065
	4,065,126
	4,065,136
	4,065,137
	4,065,192
	4,065,207
	4,065,231
	4,065,232
	4,065,244
	4,065,248
	4,065,278
	4,065,285
	4,065,331
	4,065,359
	4,065,380
	4,065,395
	4,065,413
	4,065,415
	4,065,416
	4,065,451
	4,065,464
	4,065,465
	4,065,470
	4,065,490
	4,065,494
	4,065,519
	4,065,523
	4,065,530
	4,065,531
	4,065,550
	4,065,596
	4,065,624
	4,065,626
	4,065,630
	4,065,658
	4,065,662
	4,065,669
	4,065,676
	4,065,700
	4,065,710
	4,065,743
	4,065,763
	4,065,794
	4,065,795
45 :	4,064,625
	4,064,686
	4,065,103
46 :	4,065,471
47 :	4,064,796
	4,065,008
	4,065,208
	4,065,427
	4,065,486
	4,065,538
48 :	4,064,563
	4,064,572
	4,064,604
	4,064,610
	4,064,619
	4,064,666
	4,064,749
	4,064,756
	4,064,763
	4,064,936
	4,064,942
	4,064,943
	4,064,962
	4,065,092
	4,065,127
	4,065,131
	4,065,240
	4,065,265
	4,065,333
	4,065,391
	4,065,476
	4,065,505
	4,065,512
	4,065,515
	4,065,534
	4,065,548
	4,065,585
	4,065,678
	4,065,742
	4,065,759
	4,065,785
49 :	4,064,665
	4,065,074
	4,065,085
	4,065,361
	4,065,592
	4,065,593
51 :	4,064,576
	4,064,629
	4,064,632
	4,064,703
	4,064,783
	4,064,791
	4,064,841
	4,065,011
	4,065,059
	4,065,075
	4,065,096
	4,065,118
	4,065,167
	4,065,203
	4,065,239
	4,065,242
	4,065,280
	4,065,340
	4,065,345
	4,065,348
	4,065,704
53 :	4,064,682
	4,064,744
	4,064,825
	4,065,400
	4,065,421
	4,065,576
	4,065,577
	4,065,724
54 :	4,065,160
	4,065,184
	4,065,258
	4,065,520
55 :	4,064,631
	4,064,721
	4,064,798
	4,064,823
	4,064,892
	4,064,900
	4,064,924
	4,065,267
	4,065,318
	4,065,320
	4,065,343
	4,065,493
	4,065,664
	4,065,667
56 :	4,065,024

DESIGN PATENTS

6 :	246,746
	246,753
	246,762
	246,764
	246,766
	246,768
	246,772
	246,775
	246,776
	246,800
	246,807
	246,808
	246,809
	246,810
12 :	246,783
17 :	246,759
	246,781
	246,788
	246,801
	246,805
18 :	246,749
	246,750
	246,796
25 :	246,789
	246,790
	246,791
	246,792
26 :	246,780
	246,804
27 :	246,757
29 :	246,755
34 :	246,748
	246,761
	246,773
35 :	246,802
36 :	246,754
	246,771
	246,774
	246,782
	246,793
	246,797
	246,798
	246,803
37 :	246,799
38 :	246,747
42 :	246,769
	246,806
47 :	246,778
	246,779
48 :	246,765
	246,770
	246,777
51 :	246,751
53 :	246,794
	246,795
55 :	246,763

PLANT PATENTS

18 :	4,173
21 :	4,170
29 :	4,171
30 :	4,169
41 :	4,172

U. S. GOVERNMENT PRINTING OFFICE : O - 1977

CHANGE OF ADDRESS FORM

NAME—FIRST, LAST

COMPANY NAME OR ADDITIONAL ADDRESS LINE

STREET ADDRESS

CITY | STATE | ZIP CODE

PLEASE PRINT OR TYPE

(or) COUNTRY

Mail this form to: NEW ADDRESS

Superintendent of Documents
Government Printing Office SSOM
Washington, D.C. 20402

Attach last subscription label here.

SUBSCRIPTION ORDER FORM

SUBSCRIPTION ORDER FORM

ENTER MY SUBSCRIPTION TO:

@ $ Domestic; @ $ Foreign.

NAME—FIRST, LAST

COMPANY NAME OR ADDITIONAL ADDRESS LINE

STREET ADDRESS

CITY | STATE | ZIP CODE

PLEASE PRINT OR TYPE

(or) COUNTRY

☐ Remittance Enclosed (Make checks payable to Superintendent of Documents)

☐ Charge to my Deposit Account No. ....

MAIL ORDER FORM TO:
Superintendent of Documents
Government Printing Office
Washington, D.C. 20402

US OFFICIAL GAZETTE UNITED STATES PATENT OFFICE

VOL. NO 965

DECEMBER

1977

END